SIEMENS

SIMATIC

BRAUMAT/SISTAR Classic Blocks S7

Commissioning Manual

BRAUMAT/SISTAR Classic V6.0 SP2

11/2012
A5E00239397-09

Legal information

Warning notice system

This manual contains notices you have to observe in order to ensure your personal safety, as well as to prevent damage to property. The notices referring to your personal safety are highlighted in the manual by a safety alert symbol, notices referring only to property damage have no safety alert symbol. These notices shown below are graded according to the degree of danger.

⚠ DANGER
indicates that death or severe personal injury **will** result if proper precautions are not taken.

⚠ WARNING
indicates that death or severe personal injury **may** result if proper precautions are not taken.

⚠ CAUTION
indicates that minor personal injury can result if proper precautions are not taken.

NOTICE
indicates that property damage can result if proper precautions are not taken.

If more than one degree of danger is present, the warning notice representing the highest degree of danger will be used. A notice warning of injury to persons with a safety alert symbol may also include a warning relating to property damage.

Qualified Personnel

The product/system described in this documentation may be operated only by **personnel qualified** for the specific task in accordance with the relevant documentation, in particular its warning notices and safety instructions. Qualified personnel are those who, based on their training and experience, are capable of identifying risks and avoiding potential hazards when working with these products/systems.

Proper use of Siemens products

Note the following:

⚠ WARNING
Siemens products may only be used for the applications described in the catalog and in the relevant technical documentation. If products and components from other manufacturers are used, these must be recommended or approved by Siemens. Proper transport, storage, installation, assembly, commissioning, operation and maintenance are required to ensure that the products operate safely and without any problems. The permissible ambient conditions must be complied with. The information in the relevant documentation must be observed.

Trademarks

All names identified by ® are registered trademarks of Siemens AG. The remaining trademarks in this publication may be trademarks whose use by third parties for their own purposes could violate the rights of the owner.

Disclaimer of Liability

We have reviewed the contents of this publication to ensure consistency with the hardware and software described. Since variance cannot be precluded entirely, we cannot guarantee full consistency. However, the information in this publication is reviewed regularly and any necessary corrections are included in subsequent editions.

Siemens AG
Industry Sector
Postfach 48 48
90026 NÜRNBERG
GERMANY

A5E00239397-09
Ⓟ 12/2012 Technical data subject to change

Table of contents

Preface

1

Purpose of the manual

This manual describes the blocks for the configuration of a SIMATIC S7 with BRAUMAT/ SISTAR Classic V6.0 and gives you an overview of the following topics:

- General info on system configuration
- List of all parameter sets
- Block parameter description

This manual is intended for those responsible for configuring, commissioning and servicing automation systems.

Where is this manual valid?

This manual is valid for the software package BRAUMAT/SISTAR *Classic* from Version V6.0.

The offered electronic manual is most largely identical with the contents of the on-line help. Due to a technically necessary editorial deadline for the generation of electronic manuals occasionally smaller deviations can give up opposite the on-line helps. The statements in the on-line helps are primary to those of the manual.

Place of this documentation in the information environment

This manual forms part of the BRAUMAT/SISTAR *Classic V6.0* documentation package. The following schematic of the document architecture shows the individual manuals as well as their thematic grouping within the entire program package.

Document structure

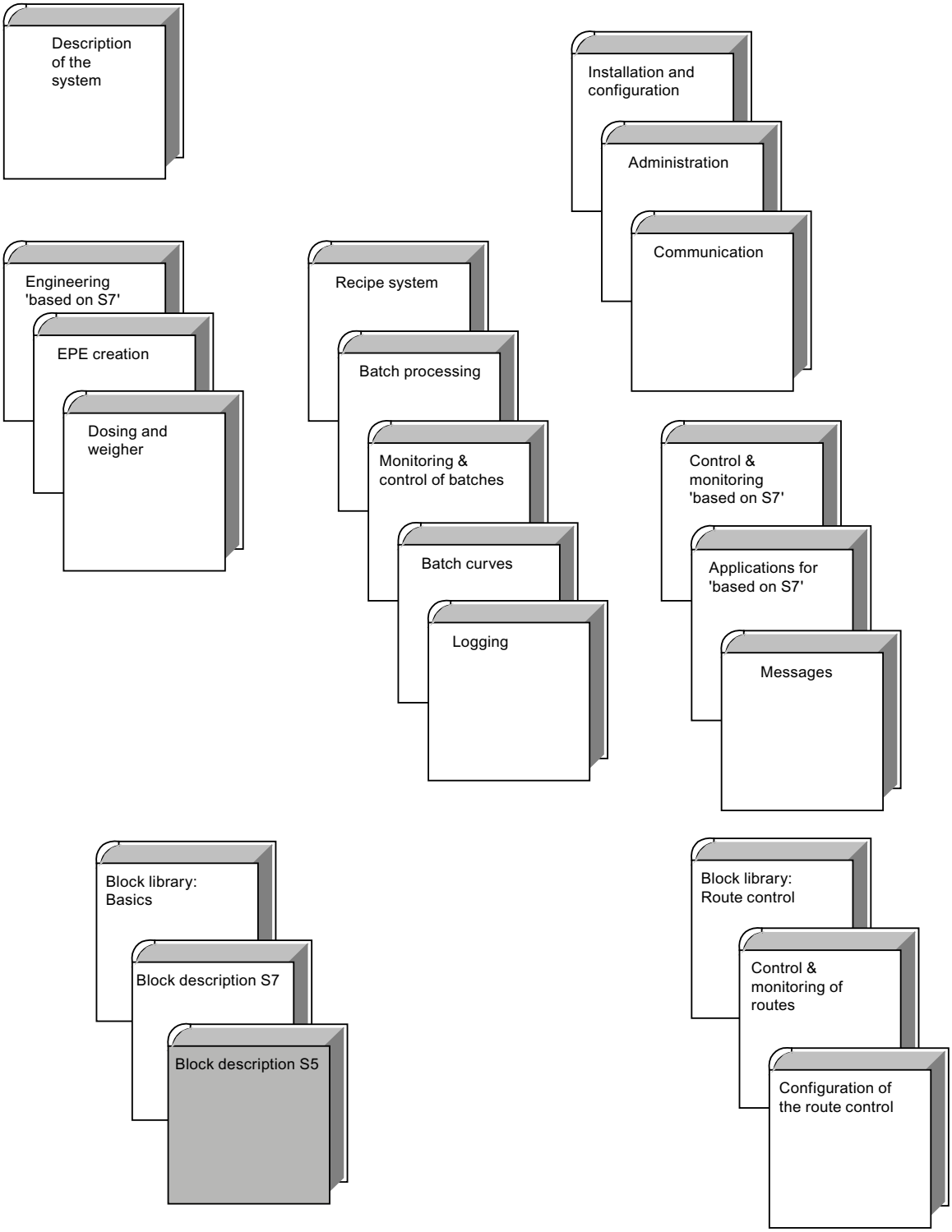

Further support

If you have any technical questions, please get in touch with your Siemens representative or agent responsible.

You will find your contact person at:

- http://www.siemens.com/automation/partner (http://www.siemens.com/automation/partner)

You will find a guide to the technical documentation offered for the individual SIMATIC products and systems here at:

- http://www.siemens.com/simatic-tech-doku-portal (http://www.siemens.com/simatic-tech-doku-portal)

The online catalog and order system are found under:

- http://mall.automation.siemens.com/ (http://mall.automation.siemens.com/)

Training centers

Siemens offers a number of training courses to familiarize you with the SIMATIC S7 automation system. Please contact your regional training center or our central training center in D 90026 Nuremberg, Germany for details:

Internet: http://www.sitrain.com (http://www.sitrain.com)

Technical Support

You can reach the Technical Support for all Industry Automation and Drive Technology products

- Via the Web formula for the support request http://www.siemens.com.automation/support-request (http://www.siemens.com.automation/support-request)

Additional information about our Technical Support can be found on the Internet pages http://www.siemens.com/automation/service (http://www.siemens.com/automation/service)

Service & Support on the Internet

In addition to our documentation, we offer our know-how online on the internet at:

http://www.siemens.com/automation/service&support (http://www.siemens.com/automation/service&support)

where you will find the following:

- The newsletter, which constantly provides you with up-to-date information on your products
- The right documents via our search function in Product Support.
- A forum, where users and experts from all over the world exchange their experiences.
- Your local representative for Industry Automation and Drive Technology.
- Information on repairs, spare parts and consulting.

General 2

2.1 General info on system configuration

2.1.1 General info on system configuration

The selection for parameterization (=configuration) of the technological blocks as well as the text blocks is done in the **main menu**. This function is used for parameterization of the technological data sets both directly in the PCU (online), as well as on the hard disk (offline). In addition, PCU related texts and data, global IOS texts and data, as well as controller overview diagrams for PID and 3-PU controllers can be parameterized. Switching online/offline can be done in the block overview.

The individual technological data set parameters are stored in the corresponding PCU data set blocks. The names and other global data, on the other hand, are not stored in the PCU data blocks, but in text files on the hard disk.

In the case of offline parameterization, the parameterized blocks are subsequently transferred to the PCU (**Block transfer** function).

Note

Several parameters are needed both in the PCU data set (data block) as well as in an IOS file and must, therefore, be parameterized in two places. Please make sure that no discrepancies occur (parameter values and block lengths for IOS and PCU must be the same). This is the responsibility of the user.

2.1.2 Text parameterization IOS data and texts

Section	Description
Global texts	Parameterization of general IOS data and texts
PCUxxx	Parameterization of PCU-related data and texts

2.1.3 Allocation Blocks: FC700 FC701 FC 726

This block allows for free assignment of the input/output/flag
user interfaces to the technological blocks.

In the as-delivered state, the FC 700/FC 701/
FC 726 allocation blocks are responsible for default system allocation. If this default allocation is not suitable, the user has to adapt the FC 700/FC 701/FC 726 allocation blocks. Thus, it is

possible to adapt every plant-specific peripheral configuration to the standard technological blocks.

All of the input/output/flag specifications in this manual refer to the default allocations.

The block FC 726 contains the allocation for the block
ICM and is called by FC 700/FC 701 with the according parameters. All other allocations are directly contained in the networks of FC 700/FC 701.

Allocation is performed for the following blocks:

Name	Function	Assigned DB
ASTA	Sequence chain start block	DB 614
ANAU	Analog output value	DB 731
DREIP	Three-step controller	DB 744
ESG	Individual control module (except RA)	DB 601, DB 602, DB 603, DB 604, DB 605
HAND	Manual release block	DB 701
MEKO	Measured value control	DB 728
MELD	Signal block	DB 615
MESS	Measured value recording	DB 727
MULT	Multi-functional block	DB 732
PID	Controller	DB 730
TIMER	Switch-on delay, impulse	DB 724
SEQU	Sequence	DB 612, DB 613

2.1.4 Program interfaces

The sequence program is processed directly in the sequence prior and after calling the current basic operation.

An input interface to the basic operation is provided to the user by processing the plant section program 1 before calling the actual basic operation.

After the basic operation, sequence program 2 is processed, thus providing an output interface from the user to the basic operation.

To distinguish if the actual call of the sequence program happens before or after running the basic operation, the user can query flag M101.4 (FBGO).

FB before sequence	M 101.4 = 0
FB after sequence	M 101.4 = 1

The evaluation of the system flag "FBGO“ is only valid if checked together with the system flag "ATL=1“ (sequence is running).

List of program interfaces

FB no.	Function
1001	Sequence program ½ Sequence-1
...	...
1064	Sequence program ½ Sequence-64
1065...1149	Spare
1150...1199	Interlock routes
1200	User interface reset OB100
1201	User interface restart OB101
1205	Job control
1209	Job control
1210	Job control
1220	User interface start OB1
1221	User interface end OB1
1222	User interface start OB35 (100 ms)
1223	User interface end OB35 (100 ms)
1224	User program 100 ms
1226	User interface BV ICM 1.1 ... 1.128
1227	User interface BV ICM 1.129 ... 1.255
1228	User interface BV ICM 2.1 ... 2.128
1229	User interface BV ICM 2.129 ... 2.255

2.2 List of all parameter sets

PCU	IOS	Block
FIXV	FIXV	Fixed analog values
AOUT	AOUT	Analog output
AOUT_PW	AOUT_PW	Value for analog output unit
SEQS	SEQS	Sequence chain start block
CAS/SeqStart	CAS	Batch-order start
DFM	DFM	Digital function modules
THRESTEP	THRESTEP	Three-step controller
ICM	ICM	Individual control module
FIFO	FIFO	General PCU system data
GRUP_TA	GRUP_TA	Group block
INCO	INCO	Incremental transformer
CURVSCAN	CURVSCAN	Curve target values
MAINT_ICM	MAINTICM	Maintenance data ICM
MAINT_USR	MAINTUSR	Maintenance data user
MVC	MVC	Measured value control
MSG	MSG	Signal block

PCU	IOS	Block
AIN	AIN	Measured value recording
AVA_PW	AVA_PW	New/old value from input block
MULT	MULT	Multi-functional block
PCU_GEN	PCU_GEN	General PCU system data
PID	PID	PID controller
POLY	POLY	Polygon adaptation
SENDPU	SENDPU	Send buffer
DIS_MSG	DIS_MSG	Block PCU messages
SEQU	SEQU	Sequences Old / up to recipe system V3
SCHEDULE	SCHEDULE	List of class block calls in scheduler
SCHEDULE_I		Scheduler instance DB
SEQU	SEQU	Sequences (sequences) New / from recipe system V5
SpeValue	SpeValue	Special values → Man 16_Application based on S7
TIMER	TIMER	Switch-on delay, impulse
XC_ASTA_RCV (DB740)		Cross coupling sequencer start receive block → Man 04_Communication
XC_ASTA_SR (DB988)		Cross coupling sequencer start layer 4 S7<-> S5 →Man 04_Communication
XC_PCU_32 (DB704)	XC_PCU_32	Cross coupling PCUs S7<->S7 connections → Man 04_Communication
XC_PCU_SR (DB984)		Cross coupling-PCUs layer 4 connections → Man 04_Communication
XC_JOB_32 (DB705)	XC_JOB_32	Cross coupling PCUs S7<->S7 jobs → Man 04_Communication
XC_JOB_SR / XC_SJOB_SR (DB985)		Cross coupling PCUs layer 4 S7<->S5 jobs → Man 04_Communication
ZYKLMESS		Measurement: OB1 and time slice cycle times
VMON	VMON	Target/actual value comparison of attributes for technol. class blocks
Wgh_GF		Weigher basic function à Man_08 Dosing and weighers
Wgh_SILO_W1		Silo/tank data Component preset data → Man_08 Dosing and weighers
Wgh_SIWAREX_W		Weighers technological function parameterization → Man_08 Dosing and weighers

Blocks 3

3.1 FIXV – Fixed analog values

This block makes up to 255 configurable fixed analog values available as a source for other blocks.

It is used as a set or limit value.

Global data for block FIXV: Parameterization PCU

FIXV PCU		DB 734		Sets: max. 255 per PCU
No.	NAME	TYPE	Preset	Comment
1	Anz	I16	1	FIXV count
2	DS_Len	I16	10	Data set length
3*	Offset	I16	100	Offset to 1st data record
4*	MaxDS	I16	255	Maximum DS count

* hidden attributes

Parameter sets for block FIXV: Parameterization PCU

FIXV PCU		DB 734			Sets: max. 255 per PCU
No.	NAME	TYPE	Attr.	Preset	Comment
1	ANA	I16		0	Fixed analog value
2	ANA_DINT	I32		0	FIXV value double integer
3*	ANA_REAL_H	I16	HI	0	FIXV-value REAL High
4*	ANA_REAL_L	I16	HI	0	FIXV-value REAL Low

* hidden attributes

The analog value can be entered as Integer.

Double-Integer and REAL have already been implemented in the ANA block ready for future applications.
Attribute HI = Hidden means that this parameter is displayed only in view "hidden attributes".

Parameter set: Text parameterization IOS

FIXV IOS			Sets: max. 255 per PCU
No.	Type	Preset	Comment
1	Z16	ANA xxx	Block name

3.2 AOUT - Analog output

This block allows up to 256 setpoints to be output via the analog output modules to the process.

The setpoint is specified as a physical variable of other blocks (PID controller, sequences etc.) via sourcing. The block converts this specified setpoint into electrical units and forwards it to the I/O devices via the analog output modules.

At the same time, the physical and the digital start and limit range values may be configured.

The limit definition for the digital range has the advantage of adapting the analog output to various output module families of SIMATIC S5/S7 as well as other vendors.

The setpoint is converted into electrical units linearly within the specified scale (XANF, XEND) with consideration given to Live Zero/Dead Zero.

The block works independently of various physical output formats (0..10 V, -10..+10 V, 0..20 mA, 4..20 mA).

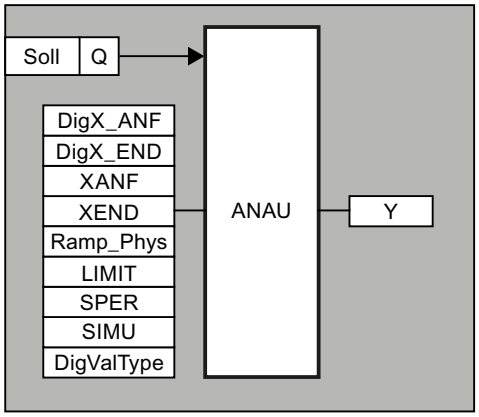

To avoid jumps, the maximum setpoint change per second can be specified via a ramp (RAMP_PHYS). The output value is counted up by a 1 sec cycle whereas the full value is output if the RAMP value is 0.

For program start without analog peripherals, per setpoint a block bit (SPER) can be used to suppress the output of the value. A value (Y) can be specified per setpoint per operation for simulation (SIMU). The interconnection is then inactive.

Parameterization:	Parameterization ANAU PCU
Text parameterization:	ANAU IOS
Process interface:	DB 731 ANAU_PW
User interface:	PAW 512 - PAW 1022
Meaning:	Parameter SIMU and SPER

Global data for block ANAU : Parameterization PCU

ANAU PCU		DB 731		Sets: max. 256 per PCU
No.	NAME	TYPE	Preset	Comment
1	ANAUAnz	I16	1	ANAU count
2	DS_Len	Byte	40	Data set length
3*	Offset	I16	300	Offset to 1st data record
4*	MaxDS	I16	256	Maximum DS count
5*	OfffsRun	I16	100	Offset to runtime copy

* hidden attributes

Parameter sets for block ANAU - PCU parameter assignment

ANAU PCU		DB 731		Sets: max. 256 per PCU
No.	NAME	TYPE	Preset	Comment
1	SOLL	Quell	8000 Hex	Phys. setpoint source
2	DigX_ANF	I16	0	Digital start value
3	DigX_END	I16	27684	Digital end value
4	XANF	I16	0	Setpoint start
5	XEND	I16	1000	Setpoint end
6	RAMP_PHYS	I16	100	Max. change in Y per sec.
7	DigValType	Byte	0	AA format: 0=S7, 5=S5, 6= S5(sign/amount)
8	SIMU	B1	0	Simulation: 0/1 = No/Yes
9	SPER	B1	0	Output inhibit: 0/1 = No/Yes
10	LIMIT	B1	1	Limitation XANF<=Y<=XEND
11	Y	I16	0	HW independent dig. output value
12*	Y_RAW	I16	0	HW dependent dig. output value
13*	ISOLL	I16	0	Setpoint
14*	Status	I16	0	Status as word
15*	SIMU2	B1	0	Simulation2: 0/1 = No/Yes

* hidden attributes

Relations:

(see examples in chapter "Analog functions", ANAU)

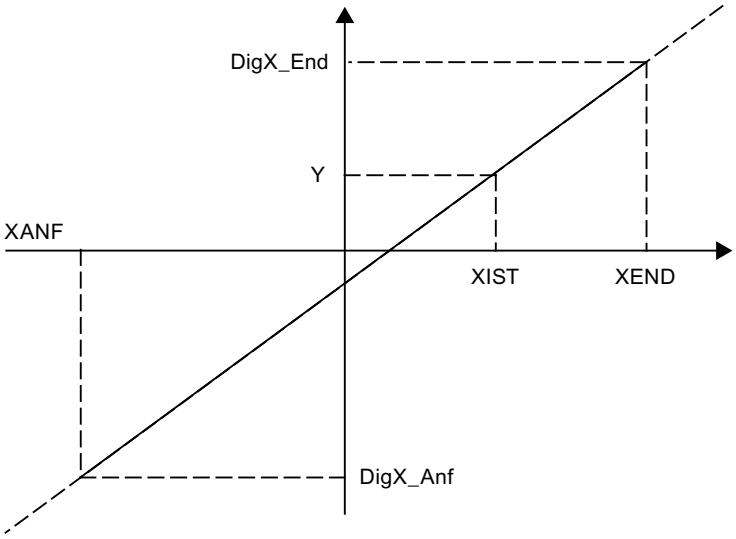

Examples:

- Example 1:
  Application of ANAU with analog output module with (0..20 mA or 0..10 V)

Presets/Adjustments	S5 module	S7 module
Parameterization hardware	Not applicable (module e.g. 6ES5 470-4UA12)	Change of hardware configuration in S7 project: Type of output: I or U Output range: 0 to 20 mA or 0 to 10 V
Adjustments in SISTAR parameterization	DigX_ANF = 0 (preset) DigX_END = 1024 XANF = 0 (0.0%) (preset) XEND = 1000 (100.0%) DigValType = 5 (S5)	DigX_ANF = 0 (preset) DigX_END = 27648 (preset) XANF = 0 (0.0%) (preset) XEND = 1000 (100.0%) DigValType = 0 (S7)

- Example 2:
  Application of ANAU with analog output module with (4..20 mA or 1..5 V)

Presets/Adjustments	S5	S7
Parameterization hardware	Not applicable (module e.g. 6ES5 470-4UA12)	Change of hardware configuration in S7 project: Type of output: I or U Output range: 4 to 20 mA or 1 to 5 V
Adjustments in SISTAR parameterization	DigX_ANF = 205 (preset) DigX_END = 1024 XANF = 0 (0.0%) (preset) XEND = 1000 (100.0%) DigValType = 5 (S5)	DigX_ANF = 0 (preset) DigX_END = 27648 (preset) XANF = 0 (0.0%) (preset) XEND = 1000 (100.0%) DigValType = 0 (S7)

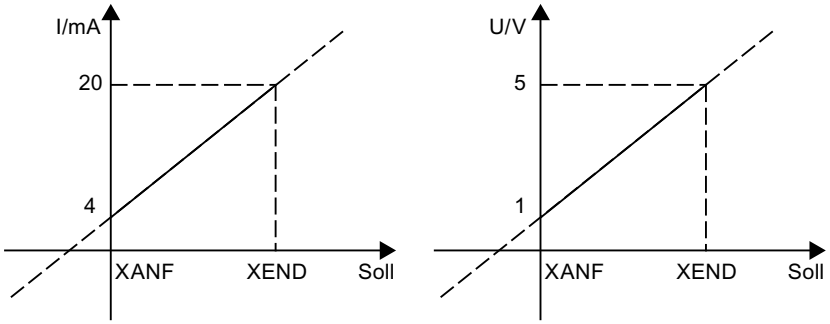

Text parameterization IOS

ANAU IOS			Sets: max. 256 per PCU
No.	Type	Preset	Comment
1	Z16	ANAU xxx	Block name

Significance of parameters SIMU and SPER for Block ANAU

SIMU	SPER	Functional properties
0	0	Output to peripherals. Get value Y from value SOLL (normal operation).
1	0	Output to peripherals. Bit SIMU: Y value is not formed from TARGET but can be set in parameter assignment (@dig. output value). Bit SIMU2: Simulated value is entered in iTarget by analog faceplate and converted from phys. @dig. output value by the ANAU block
0	1	No output to peripherals. Get value Y from value SOLL.
1	1	No output to peripherals. …"SIMUx" see above

3.3 AOUT_PW

The peripheral addresses of the AOUT blocks need not be organized in consecutive order.

The system may be informed by the class **ANAU_PW** with max. 25 ranges from which it reads out the rare values (starting with range 1).

Each range is defined by the peripheral start address and the number of rare values.

Data in PCU (per parameterization PCU)

AOUT_PW PCU		DB731			Sets: max. 25 per PCU
No.	NAME	TYPE	Attr.	Preset	Comment
1	PW	I16		-1	Start address PAW range (-1=list end)
2	Num	I16		0	Range length (0=list end)

The ranges have to be occupied starting with range 1,

which is preset in the delivery state with:

- PW=512, Num=192
  which means that the first 192 analog values are given out starting from PAW 512.

If the system finds a range PW = -1 then the input of rare values is stopped as well as at Num <= 0.

Text parameterization IOS

AOUT_PW IOS				Sets: max. 25 per PCU
No.	Type	Info	Preset	Comment
1	Z16	P IOS	AOUT_PW	Block name

3.4 SEQS - Sequence start block

This block allows sequences to be started with simultaneous specification of the recipe type, the recipe number, the job number, and the batch number.

The production year and job number are used for reports.

Sequences can be started by other sequences or any other user applications. It is also possible to start a sequence via a coupling from a partner PCU. In this case, an ASTA must only be parameterized in the source PCU, however, not in the target PCU. The sequence is then started via a coupling bit. The block XC_ASTA_RCV may be used in the destination PCU for diagnostic purposes.

For each start, one of 96 possible ASTA blocks is required in which corresponding source and target data can be specified.

When starting sequences, the following occurs in the sequence or target sequence data set:

No start occurs if the sequence is running (step<>0), if the permanent condition is not true or the sequence is in Manual mode

Before start:

Year, recipe type, recipe number, order number, and batch number are entered in accordance with the parameterization in the data set.

Start:

Sequence start occurs (setting step 1). The ATL flag may be queried by the user to determine success of the initiated start.

Each ASTA parameter set is assigned an impulse flag (M 672.0 - M 683.7). The control (set/delete) of the trigger flag is done by the user in the respective TA_GOP_FB or in the Basic operations.

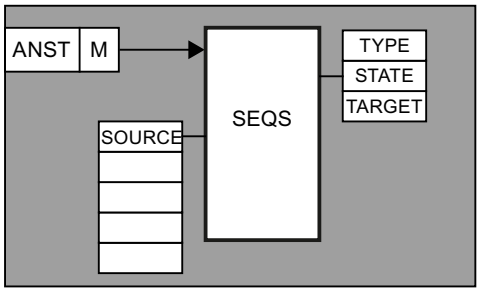

The ASTA block checks the start conditions of the target sequence. If the start conditions "Target sequence released"", "Not started", "No Manual mode", "Permanent conditions present" are not found, the "Start Error" message will be given.

If the start conditions are fulfilled, the target sequence is started with step 1.

Parameter set:	Parameterization PCU, text parameterization IOS
Process interface:	DB 614: Trigger bit
User interface:	Flag bit assignment
Meaning:	Parameter TYPE

Global data for block SEQS: Parameterization PCU

SEQS PCU		DB742		Sets: max. 96 per PCU
No.	**NAME**	**TYPE**	**Preset**	**Comment**
1	ASTAANZ	I16	1	Number of data sets
2	DS_Len	I16	20	Data set length
3*	Offset	I16	300	Offset to 1st data record

* hidden attributes

Parameter sets for block SEQS: Parameterization PCU

SEQS PCU		DB742		Sets: max. 96 per PCU
No.	NAME	TYPE	Preset	Comment
1	Type	BYTE	0	SEQS type (1,2,4,9,10,12)
2	MsgSEQ	BYTE	0	Assigned sequence for message
3	SrcSEQ	BYTE	0	Number of source sequence
4	DestSEQ	BYTE	0	Number of target sequence
5	DestPCU	BYTE	0	Target PCU number
6	Year	BYTE	0	Year for RTYP, JobNo, BatchNo
7	RecipeType	BYTE	0	Recipe type
8	Recipe	I16	0	Recipe number (sort number)
9	Order	I16	0	Job number
10	Batch	I16	0	Batch number
11*	ASTA_M	B1	0	Trigger flag
12*	ASTA_FB	B1	0	Positive edge
13	ParamError	B1	0	Parameter error
14*	ParamErrorMsg	B1	0	Message parameter error to IOS
15	Error	B1	0	Error at sequence start
16*	Error Msg	B1	0	Message error at sequence start
17*	Remote Error	Byte	0	0: OK; 1..255: Error
18*	SrcPCU	Byte	0	Source PCU no.
19*	SrcASTA	Byte	0	Source SEQS no. in source PCU
20*	E4SendRecv	B1	0	0 = layer 7 Get/Put; 1 = layer 4 Send/Recv

* hidden attributes

Text parameterization IOS

SEQS IOS				Sets: max. 96 per PCU
No.	Type	Info	Preset	Comment
1	Z16	P IOS	SEQS xxx	Block name

Process Interface: DB 614: Trigger bit

DB614 sequence permanent condition

DB614	
DBB10	SEQS 8 ... 1
DBB11	SEQS 16 ... 9
DBB12	SEQS 24 ... 17
...	...
DBB21	SEQS 96 ... 89

User interface for block ASTA

No.	Flag	No.	Flag	No.	Flag	No.	Flag
1	M 672.0	25	M 675.0	49	M 678.0	73	M 681.0
2	M 672.1	26	M 675.1	50	M 678.1	74	M 681.1
3	M 672.2	27	M 675.2	51	M 678.2	75	M 681.2
4	M 672.3	28	M 675.3	52	M 678.3	76	M 681.3
5	M 672.4	29	M 675.4	53	M 678.4	77	M 681.4
6	M 672.5	30	M 675.5	54	M 678.5	78	M 681.5
7	M 672.6	31	M 675.6	55	M 678.6	79	M 681.6
8	M 672.7	32	M 675.7	56	M 678.7	80	M 681.7
9	M 673.0	33	M 676.0	57	M 679.0	81	M 682.0
10	M 673.1	34	M 676.1	58	M 679.1	82	M 682.1
11	M 673.2	35	M 676.2	59	M 679.2	83	M 682.2
12	M 673.3	36	M 676.3	60	M 679.3	84	M 682.3
13	M 673.4	37	M 676.4	61	M 679.4	85	M 682.4
14	M 673.5	38	M 676.5	62	M 679.5	86	M 682.5
15	M 673.6	39	M 676.6	63	M 679.6	87	M 682.6
16	M 673.7	40	M 676.7	64	M 679.7	88	M 682.7
17	M 674.0	41	M 677.0	65	M 680.0	89	M 683.0
18	M 674.1	42	M 677.1	66	M 680.1	90	M 683.1
19	M 674.2	43	M 677.2	67	M 680.2	91	M 683.2
20	M 674.3	44	M 677.3	68	M 680.3	92	M 683.3
21	M 674.4	45	M 677.4	69	M 680.4	93	M 683.4
22	M 674.5	46	M 677.5	70	M 680.5	94	M 683.5
23	M 674.6	47	M 677.6	71	M 680.6	95	M 683.6
24	M 674.7	48	M 677.7	72	M 680.7	96	M 683.7

Significance of TYPE parameter in block SEQS

TYPE	Function	Source	Target	Miscellaneous
0	Element undefined	-	-	
1	Start via sequence	Sequence	Sequence	Recipe type, recipe number, job number, and batch number from the source sequence
2	Start of a CIP sequence	-	Sequence	Recipe type, recipe number, job number, and batch number taken from the SEQS data set
4	Start of a CIP sequence	-	Sequence	Recipe type and recipe number taken from SEQS data set Job number and batch number not changed in target sequence
5	Start of a sequence	-	Sequence	Recipe type and recipe number taken from SEQS data set Year=actual year Job number=calendar week Batch number=(1...n) beginning with 1 each week, incremented by each start

TYPE	Function	Source	Target	Miscellaneous
6	Start of a sequence	-	Sequence	User interface "SEQS_USER_FC"
9	Start of a sequence in another PCU	Sequence	PS in other PCU	Like type 1, however, target sequence is in another PCU
10	Start of a CIP sequence in another PCU	-	PS in other PCU	Like type 2, however, target sequence is in another PCU
12	Start of a CIP sequence in another PCU	-	PS in other PCU	Like type 4, however, target sequence is in another PCU
13	Start of a sequence in another PCU	-	PS in other PCU	Like type 5, however, target sequence is in another PCU
14	Start of a sequence in another PCU	-	PS in other PCU	Like type 6, however, target sequence is in another PCU

Recommendation for types 2/4/10/12

- In order to get optimal protocols and archives, the parameters Year, Order, Batch should varied prior to each sequence start.
- For this several variants exist:
  - Direct access to ASTA data set
    e.g. variation of parameter year
    ```
    L SYS.byYear
    TSEQS.au[13].u.bYear
    ```

Designation of parameters can be taken from DB742 or UDT742

- Use of type 5/13
- Use of type 6/14

if the variation of type 5/13 is not suitable, the parameters may be set by ASTA_USER_FC .

```
 interface of the FC:
VAR_INPUT
iRecord : INT;                //number of SEQS data set (1 to n)
bType : BYTE;                 //SEQS type: 6 (local), 14 (remote)
END_VAR
VAR_OUTPUT
boRetVal : BOOL;              //result False=OK, TRUE=error.
                              //if error no
                              //sequence start is initiated!
END_VAR
VAR_IN_OUT                    //partner PCU
                              //dest. plant sect. in partner PCU
                              //All following parameters are preset with //
                              actual values from SEQS data sets //and can be
                              varied by the //user program in
                              SEQS_USER_FC //.
    bDestPCU : BYTE;
    bDestSEQ : BYTE;
```

```
 interface of the FC:
    bYear : BYTE;
    bRecipeType : BYTE;
    iRecipe : INT;
    iOrder : INT;
    iBatch : INT;
END_VAR
```

In the delivery version of ASTA_USER_FC a program code is deposited, which takes the year from DB701, sets iOrder=month*100+day and counts iBatch consecutively from 1..n. The batch number starts with 1 on each new order number. Further, the SEQS data set number and type are not evaluated.

Note

This code is intended as a typical, however it can be used in practice without changes.

3.5 CAS - batch job start in the PCU

The orders for the individual units are written into the CAS from the IOS order and recipe system. A CAS is available for each unit.

The assignment is one to one, which means, for example, that CAS 29 corresponds to the 29th unit.

Note

The number of CAS data sets must be at least the same as that of the units.

Global data for block CAS: Parameterization PCU

CAS PCU		DB718		Sets: max. 64 per PCU
No.	NAME	TYPE	Preset	Comment
1*	Cas_Stat	B1	0	Status request for all CAS entries
2	CAS_Anz	Byte	1	Number of CAS entries
3	DS_Len	I16	22	Data set length
4*	Offset	I16	300	Offset to 1st data set
5*	MaxDS	I16	64	Maximum DS count
6*	OffsRun	I16	100	Offset to runtime copy

* hidden attributes

Parameter sets for block CAS: Parameterization PCU

CAS PCU		DB718		Sets: max. 64 per PCU
No.	NAME	TYPE	Preset	Comment
1	Year	I8	0	Year for Rtyp, order no., batch
2	Rtyp	I8	0	Recipe type
3	Rec.ID	I16	0	Recipe number
4	OrderNo	I16	0	Order number
5	BatchNo	I16	0	Batch number
6	Unit	I16	0	Unit number
7	ModSt	I8	0	Start mode
8	Time_hi	I16	0	Start time since 1.1.70
9	Time_lo	I16	0	Start time since 1.1.70
10	Message	I8	0	Message CAS state
11*	Schr_int	I8	0	Internal step number
12*	Time_CAD	I8	0	Monitoring time arrival batch data
13*	Startbed	B1	0	Start condition met
14	UserSt	B1	0	Start by user
15*	FreiTA	B1	0	Unit enable
16	StSper	B1	0	Start lock by user
17	CADiO	B1	0	Batch data OK
18	CADniO	B1	0	Batch data faulty
19	WartHa	B1	0	Wait Manual by user
20	CASLoe	B1	0	CAS entry delete by user
21	StaImp	B1	0	Start pulse
22*	Flint	B1	0	Internal edge
23	CADAnf	B1	0	Batch data request by user
24*	Anwendbi	B1	0	User bit
25*	CASAuftr	B1	0	CAS from order control
26*	StatCAS	B1	0	Status request running
27*	TrigBearb	B1	0	CAS entry first time cycle

* hidden attributes

Text parameterization IOS

UNIT	IOS		Sets: max. 64 per PCU
No.	Type	Preset	Comment
1	Z16	Unit xxx	Block name

Start mode: Four different start modes are available

Mode	Description
0	Order data set free
1	Start processing immediately; if unit not free, send error message to IOS
2	Start as soon as possible; if unit not free, no error message
3	Timed order; if unit (after timeout) not free, send error message
4	Event-dependent start by user program; • if unit not free, send error message The data sets of the CAS are stored in data block CAS (DB718). The processing is done by CAS_FB (FB705). While processing the CAS, the actual data set is stored in CAS_UDT (UDT 718). CAS_FB calls CAS_USR_FB (FB 1205). By examining the data set number, the user can determine which CAS and thus for which unit data is available. The data is available in CAS_UDT (UDT 718) and is documented there. The unit is started once a positive signal is received from start flag (boFreeMode4).

If the unit is started, a telegram with start mode 0 is sent to the IOS. This enables the CAS again.

At the start, order number, batch number, recipe type and recipe number are copied from the order data set to the unit to be started.

3.6 DFM - Digital Function Modules

3.6.1 Overview DFM

The specification of digital target values is necessary for controlling the process. For this purpose, there are a maximum of 20 Digital Function Modules (DFM) available for the sequence plus the run time monitor TUET. to which various functions can be assigned depending on the sequence.

The type of function of the individual modules is parameterized, whereby the same type of function can be assigned to several modules or used in several sequences.

It is also possible to use a type of function more than once in a basic operation.

The number and types of function in the DFM are defined separately for each DFM (see Parameterization of basic operation)

The DFMs are divided into four groups:	
DFM0	For 255 counters
DFM1	For 255 decoders, time steps, target value and limit value steps

The DFMs are divided into four groups:	
DFM2	For 255 decoders, time steps, target value and limit value steps
DFM3	For 255 decoders, time steps, target value and limit value steps 255 reserve DFMs for users

Possible function types for the digital function module:

- Forward counter non-totalizing
- Forward counter totalizing
- Backward counter non-totalizing
- Backward counter totalizing
- Time step forward
- Time step forward totalizing
- Time step backward
- Limit value step
- Target value stage
- Mask 32 of 32
- Decoder 1 of 64
- Allocation block
- Target/Actual value cell

The results (e.g. time expired, counter value reached, limit value exceeded) are available as binary signals (DFM flag) for logical operations or as switching condition in the basic operations.

The target values of the function modules are stored in the recipe lists directly after the number of the basic operation for each step and are loaded from the sequence control into the function module when processing the step.

Only 16-bit numbers ranging from -32767 to +32767 are possible for target value entry. 32-bit numbers can be assigned by the recipe list.

The following is valid for all function types:

If "NONE" (blank) is entered as a target value in the recipe list, the target value of the function module is not overwritten when starting the basic operation. (Each target value can be deleted by overwriting it with "#".)

The target value specified in the previous steps is retained.

The parameter InitActVal is relevant for cases where the target value remains unchanged. With this parameter it is possible to initialize the actual value (InitActVal = 1) or to proceed with the actual value (InitActVal = 0).

The control program for binary signals of the function module (time release, counter cycle, target value block) are entered into the respective sequence function block.

If no PSPR block report entry has been programmed, a run report is automatically written when processing the sequence (batch, brew report) in which the basic operation, the starting time of the basic operation as well as the target and actual values of all function modules are entered.

The starting time of the basic operation (Date HH.MM) is found in the first column of the run report, whereas the second column contains the values for the digital function modules.

The printout of the run protocol is started automatically after processing the last GOP (basic operation) of a sequence or can be started by the operator.

To achieve a meaningful run report and archiving, the batch numbers of all sequences should be incremented at each sequence start. Batch numbers can be assigned from 1...32767 per sort block.

3.6.2 DFM0 - Counter

255 counters can be parameterized per PCU. The determination of when which counter is to be used is specified in the parameterization for the basic operation.

Global data for block DFM0: Parameterization PCU

DFM0 PCU		DB736		Sets: max. 255 per PCU
No.	NAME	TYPE	Preset	Comment
1	DFM0_Anz	Byte	1	DFM0 count
2	DS_Len	Byte	20	Data set length
3*	Offset	I16	300	Offset to 1st data record
4*	MaxDS	I16	255	Maximum DS count
5*	OffsRun	I16	100	Offset to runtime copy
6*	Run200ms	B1	1	Pulses registered once every 200 ms (preset to 100 ms)

*) hidden attributes

Parameter sets for block DFM0: Parameterization PCU

DFM0 PCU		DB736		Sets: max. 255 per PCU
No.	NAME	TYPE	Preset	Comment
1	SOLL	I16	0	Target value Low-Word
2	SOLL_DINT	I32	0	Target value double integer
3	IST	I16	0	Actual value Low-Word
4	IST_DINT	I32	0	Actual value double integer
5	InitActVal	B1	0	Init DFM actual value at SetValue from recipe = #
6	Limit_DINT	I32	0	Switching limit double integer
7	Richtung	B1	0	Direction; 0 = forward counter, 1 = backward counter
8	Summation	B1	0	0 = non-totalizing, 1 = totalizing

DFM0 PCU		DB736		Sets: max. 255 per PCU
No.	NAME	TYPE	Preset	Comment
9	Art	B1	0	Type; 0 = PSK is increment, 1 = PSK is reduction
10	PSK	I16	1	Increment/reduction
11*	Hilf	I16	0	Help cell
12*	Error	B1	0	Parameter error
13*	Neuer Gop	B1	0	GOP change bit
14*	TeilanlStart	B1	0	Start of plant section bit

* hidden attributes

Text parameterization IOS

DFM0 IOS			Sets: max. 255 per PCU
No.	Type	Preset	Comment
1	Z16	DFM0 xxx	Block name

General info on counters

To register counter pulses it is necessary to assign the counter inputs to flags. One flag (M 984.0 ... M 1015.6) per counter is specified for this purpose. The assignment is performed depending on the counter frequency in the program of the sequence or, for fast pulse sequences, in user program FB1224.

The maximum counter frequency is 2.5 Hz. However, it is possible to run the pulse inputs with a higher sampling rate of 200 ms to reduce the AS cycle time, which provides a max. counting frequency of 1.25 Hz. Thereby the AS cycle time decreases.

Mode	Description
DB 736 DBX12.0=0	Delivery state: reduction 100 ms -> 200: No
DB 736 DBX12.0=1	Reduction 100 ms -> 200: Yes

It is necessary to call FB 736 with the counter number (1...255) as a parameter in the sequence or in the basic operation to update the counter status and form the DFM result flag.

The **direction** parameter specifies whether it is a forward or a backward counter.

If parameter type = "0" is specified, the counter is increased or decreased at each pulse by the value of parameter PSK.

If parameter type = "1" is specified, the counter will be incremented or decremented by one after each x-th pulse (x = value in PSK).

Forward counter

When processing the counter with a simultaneous start basic operation, the parameterized switching limit is loaded into the actual value cell of the counter. The DFM result flag is set upon reaching or exceeding the target value specified in the recipe list.

Example (only relevant parameters):

Forward counter for liquid influx: The counter is to be increased by 1 hl at each pulse. The display occurs in sequence 2. The counter is to be parameterized as DFM no. 5.

Parameterization:

Parameter	Value	Description
Direction	0	0 = Forward counter
Type	0	0 = PSK is increment
PSK	1	Increment

Assignment of counter input in FB 1224:

	A	I3.1	Pulse counter input IDM
	A	I65.2	ICM-11 RE
	=	M 984.4	Counter input DFM0 no. 5

Call DFM block in FB 1002:

	AN	M 5.3	Release flag
	JC	NEXT	Skip FC call, else
	CALL	FC 736	Processing group DFM0
	iDfm:=	5	DFM number = 5
NEXT			

Line in file SW.INI:

Line	Contents
Line 5:	SW, hl, 0, 0, 250;

Forward counter totalizing (through several steps)

When starting the sequence the parameterized switching limit is loaded into the actual value cell. As opposed to the non-totalizing forward counter, the actual value is not overwritten by the switching limit parameterized in the PCU at every step. The DFM result flag is set upon reaching or exceeding the target value specified in the recipe list.

Example:

Forward counter totalizing for solid substance taking: The counter is to be increased by 50 kg at each pulse. The display occurs in sequence 1. The counter is to be parameterized as DFM no. 6.

Parameterization:

Parameter	Value	Description
Limit_DINT	0	Switching limit double integer
Direction	0	0 = Forward counter

Parameter	Value	Description
Summation	1	1 = totalizing
Type	0	0 = PSK is increment
PSK	50	Increment

Assignment of counter input in FB 1224:

	A	I2.5	Pulse counter input IDM
	=	M 984.5	Counter input DFM0 no. 6

Call DFM block in FB 1001:

	AN	M 656.0	Plant sect. 1 not running
	JC	NEXT	Skip FC call, else
	CALL	FC 736	Processing group DFM0
	iDfm:=	6	DFM number = 6
NEXT			

Line in file SW.INI:

Line	Contents
Line 6:	SW, kg, 0,0,15000;

Backward counter

When processing the counter and a simultaneous start basic operation, the target value is loaded into the actual value cell. Upon reaching or dropping below the parameterized switching limit (Grenze_L) the DFM result flag is set.

Example:

Backward counter for solid product dosing. At every fifth pulse the counter value is to be reduced by 1 m^3. The display occurs in sequence 4. The counter is to be parameterized as DFM no. 7.

Parameterization:

Parameter	Value	Description
Limit	0	Switching limit
Direction	1	1 = Backward counter
Type	1	1 = PSK is reduction
PSK	5	Reduction

Assignment of counter input in FB 1224:

	A	I13.7	Pulse counter input IDM
	=	M 984.6	Counter input DFM0 no. 7

Call DFM block in FB 1004:

	CALL	FC 736	Processing group DFM0
	iDfm:=	7	DFM number = 7

Line in file SW.INI:

Line	Contents
Line 7:	SW, m^3, 0, 0, 20;

Backward counter totalizing (through several steps)

When first processing the counter, the switching limit is loaded into the actual value cell of the counter. As opposed to the non-totalizing backward counter, the switching limit parameterized in the PCU is not loaded into the actual value cell at every step. Upon reaching or dropping below the parameterized switching limit (Grenze_L) the DFM result flag is set.

Example:

Backward counter totalizing for liquid addition. At every pulse the counter is to be reduced by 10 l. The display occurs in sequence 8. The counter is to be parameterized as DFM no. 8.

Parameterization:

Parameter	Value	Description
Limit_DINT	0	Switching limit double integer
Direction	1	1 = Backward counter
Summation	1	1 = totalizing
Type	0	0 = PSK is increment
PSK	10	Increment

Assignment of counter input in FB 1224:

	A	I22.3	Pulse counter input IDM
	A	I67.3	ICM-26 RE
	=	M 984.7	Counter input DFM0 no. 8

Call DFM block in FB 1008:

	CALL	FC 736	Processing group DFM0
	iDfm:=	8	DFM number = 8

Line in file SW.INI:

Line	Contents
Line 8:	SW, liters, 0, 0, 300;

Assignment of counter inputs and DFM result flags of counters

									Counter inputs	DFM result flag
Bit address									Byte address	Byte address
	0	1	2	3	4	5	6	7	Flag	Flag
	1	2	3	4	5	6	7	8	984	728
	9	10	11	12	13	14	15	16	985	729
	17	18	19	20	21	22	23	24	986	730
	25	26	27	28	29	30	31	32	987	731
	33	34	35	36	37	38	39	40	988	732
	41	42	43	44	45	46	47	48	989	733
	49	50	51	52	53	54	55	56	990	734
	57	58	59	60	61	62	63	64	991	735

									Counter inputs	DFM result flag
C	65	66	67	68	69	70	71	72	992	736
O	73	74	75	76	77	78	79	80	993	737
U	81	82	83	84	85	86	87	88	994	738
N	89	90	91	92	93	94	95	96	995	739
T	97	98	99	100	101	102	103	104	996	740
ER	105	106	107	108	109	110	111	112	997	741
	113	114	115	116	117	118	119	120	998	742
N	121	122	123	124	125	126	127	128	999	743
U	129	130	131	132	133	134	135	136	1000	744
M	137	138	139	140	141	142	143	144	1001	745
B	145	146	147	148	149	150	151	152	1002	746
E	153	154	155	156	157	158	159	160	1003	747
R	161	162	163	164	165	166	167	168	1004	748
	169	170	171	172	173	174	175	176	1005	749
	177	178	179	180	181	182	183	184	1006	750
	185	186	187	188	189	190	191	192	1007	751
	193	194	195	196	197	198	199	200	1008	752
	201	202	203	204	205	206	207	208	1009	753
	209	210	211	212	213	214	215	216	1010	754
	217	218	219	220	221	222	223	224	1011	755
	225	226	227	228	229	230	231	232	1012	756
	233	234	235	236	237	238	239	240	1013	757
	241	242	243	244	245	246	247	248	1014	758
	249	250	251	252	253	254	255		1015	759

Example:

DFM 0.44	Counter input:	M 989.3
	DFM result flag	M 733.3

3.6.3 DFM1, DFM2, and DFM3 - Times, limit and target value steps, decoder, and allocation block

3 classes of digital function modules can be parameterized per PCU with 255 objects each:

- DFM1 DB737, calling interface FC737
- DFM2 DB738, calling interface FC738
- DFM3 DB739, calling interface FC739

The specification concerning which DFMs are to be used when is laid down in the parameterization of the basic operation.

Global data for block DFM1/2/3: Parameterization PCU

DFM1/2/3 PCU		DB 737/738/739		Sets: max. 255 per PCU
No.	NAME	TYPE	Preset	Comment
1	DFMx_Anz	Byte	1	DFMx count
2	DS_Len	Byte	22	Data set length
3*	Offset	I16	300	Offset to 1st data record
4*	MaxDS	I16	255	Maximum DS count
5*	OffsRun	I16	100	Offset to runtime copy
6*	OffsResult Flags	I16	750	Offset result flag
7*	Kennung	I16	16640	Identification

* hidden attributes

Parameter sets for block DFM1/2/3: Parameterization PCU

DFM1/2/3		DB 737/738/739		Sets: max. 255 per PCU
No.	NAME	TYPE	Preset	Comment
1	SOLL	I16	0	Setpoint Low-Word
2	SOLL_DINT	I32	0	Setpoint Double-Integer
3	IST	I16	0	Actual value Low-Word
4	IST_DINT	I32	0	Actual value Double-Integer
5	InitActVal	B1	0	Init DFM actual value at SetValue from recipe = #
6	Type	I16	4	DFM type 1..10 (see below)
7	PSK	I16	1	Meaning corresponding to type (see below)
8	Hilf	I16	0	Help cell
9	Qbit	Step	U M 108.1	Art 1-3: Enabled / Art 5: Blocking
10	Qdat	Quell	8000 Hex	Art 4: Actual source
11*	Error	B1	0	Parameter error
12*	NeuerGop	B1	0	GOP change bit
13*	HyUpError	B1	0	Hysteresis exceeded bit
14*	HyUp	B1	0	Upper hysteresis band bit
15*	HyDown	B1	0	Lower hysteresis band bit
16*	BoResult	B1	0	DFM result bit
17*	TeilanlStart	B1	0	Start of plant section bit

* hidden attributes

For updating the DFMs and forming the DFM result flags it is necessary to call FC 737 for DFM1 or FC 738 for DFM2 and FC 739 for DFM3 with the number of the desired DFM object as parameter (1...255) in the sequence or basic operation.

Text parameterization IOS

DFMx IOS			Sets: max. 255 per PCU
No.	Type	Preset	Comment
1	Z16	DFMx xxx	Block name

Possible function types for DFM1/2/3

Function	TYPE	QBI	PSK	Help cell	QDat	DFM result flag = 1 when
Time step forward	1	Release	Reduction	-	-	ACTUAL ≥ Target
Time step forward totalizing	2	Release	Reduction	-	-	ACTUAL ≥ Target
Time step backward	3	Release	Reduction	-	-	ACTUAL ≤ 0
Limit value stage	4	-	Hysteresis	-	Actual source	ACTUAL ≥ Target
Setpoint stage	5	Block	Replacement value	-	-	-
Mask 32 of 32	6	-	Rel. decoder no.	-	-	Target ≤ 0
Decoder 1 of 64	7	-	Rel. decoder no.	-	-	Target ≤ 0
Allocation block	8	-	Target DB	Target DW	-	-
Target/Actual value cell	10	-	-	-	Actual source	-

TYPE = 1: Time forward

When processing the DFM as time forward and simultaneously starting the basic operation, a value of zero is loaded into the actual value cell. The DFM result flag is set upon reaching or exceeding the setpoint specified in the recipe list.

For setting the time base, a reduction factor is specified in the PSK control constants related to the time base cycle 1 second (e.g. PSK = 1 --> time base = 1 second, PSK = 6 --> time base = 1/10 minute), i.e. at PSK = 6 the actual value is increased by one after six seconds.

The "running" of the time step is only released when a query result of "1" is specified in the QBit parameter. At a query result of "0" the time step is "stopped."

Example:

The counter value of a forward time step is to be increased by one every six seconds and displayed with one decimal place. The time step is only required in basic operation 68 and it should be parameterized as DFM no. 12 in group DFM1.

Parameterization:

Parameter	Value	Description
SOLL	0	Setpoint
SOLL_DINT	0	Setpoint Double-Integer
IST	0	Actual value
IST_DINT	0	Actual value Double-Integer
InitActVal	0	Init DFM actual value at SetValue from recipe **= #**
Type	1	Art 1 = time step forward
PSK	6	Reduction (increment in seconds)
Hilf	0	Help cell
QBit	U M 3.1	Release flag
QDat	0	-

Enable time step in FC 1068:

	AN	M 102.3	Pulse step end
	AN	M 761.3	Result flag DFM1 Nr. 12
	=	M 3.1	Release flag

Call DFM block In FC 1068L:

	CALL	FC 737	Processing group DFM1
	iDfm:=	12	DFM number = 12

Line in file SW.INI:

Line	Contents
Line 268:	SW, min, 1, 0, 32767:

TYPE = 2: Time forward totalizing (through several steps)

When processing the DFM as time forward totalizing and simultaneously starting the basic operation, a value of zero is loaded into the actual value cell. As opposed to the non-totalizing time step, the actual value is not set to zero at each step. The DFM result flag is set upon reaching or exceeding the setpoint specified in the recipe list.

For setting the time base, a reduction factor is specified in the PSK control constants related to the time base cycle 1 second (e.g. PSK = 1 --> time base = 1 second, PSK = 6 --> time base = 1/10 minute), i.e. at PSK = 6 the actual value is increased by one after six seconds.

The "running" of the time step is only released when a query result of "1" is specified in the QBit parameter. At a query result of "0" the time step is "stopped."

Example:

The counter value of a forward time step totalizing is to be increased by once a minute and displayed without a decimal place. The display occurs in sequence 3. The time step should be parameterized as DFM no. 13 in group DFM1.

Parameterization:

Parameter	Value	Description
SOLL	0	Setpoint
SOLL_DINT	0	Setpoint Double-Integer
IST	0	Actual value
IST_DINT	0	Actual value Double-Integer
InitActVal	0	Init DFM actual value at SetValue from recipe **= #**
Type	2	Art 2 = time step forward totalizing
PSK	60	Reduction (increment in seconds)
Hilf	0	Help cell
QBit	U M 5.1	Release flag
QDat	0	-

Enable time step in FB 1003:

	A	M 656.2	Sequence 3 running
	AN	M 761.4	Result flag DFM1 Nr. 13
	=	M 5.1	Release flag

Call DFM block in FB 1003:

	CALL	FC 737	Processing group DFM1
	iDfm:=	KF 13	DFM number = 13

Line in file SW.INI:

Line	Contents
Line 269:	SW, min, 0, 0, 32767;

TYPE = 3: Time backward

When processing the DFM as time backward and simultaneously starting the basic operation, a value of zero is loaded into the actual value cell. The DFM result flag is set upon reaching or dropping below the setpoint specified in the recipe list.

For setting the time base, a reduction factor is specified in the PSK control constants related to the time base cycle 1 second (e.g. PSK = 1 --> time base = 1 second, PSK = 6 --> time base = 1/10 minute), i.e. at PSK = 6 the actual value is increased by one after six seconds.

The "running" of the time step is only released when a query result of "1" is specified in the QBit parameter. At a query result of "0" the time step is "stopped."

Example:

The counter value of a time step backward is to be reduced by one every second. The display occurs in sequence 42. The time step should be parameterized as DFM no. 35 in group DFM2.

Parameterization:

Parameter	Value	Description
SOLL	0	Setpoint
SOLL_DINT	0	Setpoint Double-Integer
IST	0	Actual value
IST_DINT	0	Actual value Double-Integer
InitActVal	0	Init DFM actual value at SetValue from recipe **= #**
Type	3	Art 3= time step backward
PSK	1	Reduction (increment in seconds)
Hilf	0	Help cell
QBit	U M 23.4	Release flag
QDat	0	-

Enable time step in FB 1042:

	A	M 661.1	Sequence-42 running
	AN	M 796.2	Result flag DFM2 Nr. 35
	=	M 23.4	Release flag

Call DFM block in FB 1042:

	CALL	FC 738	Processing group DFM2
	iDfm:=	KF 35	DFM number = 35

Line in file SW.INI:

Line	Contents
Line 547:	SW, sec., 0, 0, 32767;

TYPE = 4: Limit value step

Upon starting basic operation, the setpoint is loaded into the setpoint cell.

The source of the actual value is configured in the QDat parameter (e.g. AIN,5 XIST).

A hysteresis value is named in the control parameters. The hysteresis value shows the upper and lower hysteresis band. If the given actual value reaches or overrides the setpoint in the data source, then the DFM flag will be set. Over the parameters boHyError, boHyUp, boHyDown , the status of the actual value will be shown.

- boHyError – hysteresis band exceeded
- boHyUp – – the actual value is in the upper hysteresis band
- boHyDown – – the actual value is in the lower hysteresis band

These parameters can be made visible under Options/hidden attributes. The bits which belong to the parameters can be read.

Example:

The temperature of a reactor (AIN 8) should be displayed with one decimal place in sequence 4. The limit value step should be parameterized in DFM no. 58 of group DFM1.

Parameterization:

Parameter	Value	Contents
SOLL	0	Setpoint
SOLL_DINT	0	Setpoint Double-Integer
IST	0	Actual value
IST_DINT	0	Actual value Double-Integer
InitActVal	0	Init DFM actual value at SetValue from recipe = #
Type	4	Art 4 = limit value step
PSK	0	Hysteresis
Hilf	0	Help cell
QBit	-	-
QDat	AIN,8,XIST	Actual source

Call DFM block inFB 1004:

	CALL	FC 737	Processing group DFM1
	iDFM:=	58	DFM number = 58

Line in file SW.INI:

Line	Contents
Line 314:	SW, °C, 1, 0, 1000;

Function:

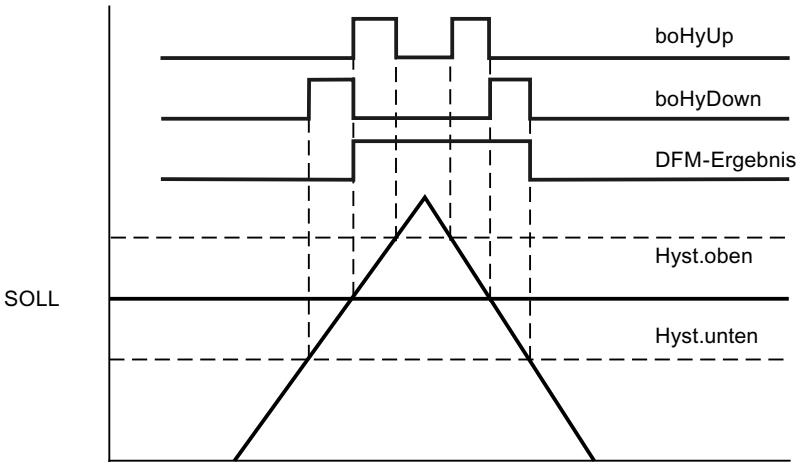

ART = 5: Setpoint stage

The digital setpoint step is used for specifying setpoints (for analog output from the actual recipe). The setpoint is transferred into the appropriate cell at basic operation start. In Parameter QBit the STEP 7 query command for the output block of the setpoint is parameterized.

If the query result is "1" (setpoint block) the parameterized replacement value PSK is loaded into the actual value cell. If the query result is "0" (setpoint release) the setpoint specified in the actual recipe is loaded into the actual value cell.

The DFM result flag is irrelevant.

Example:

A target run off is specified as a setpoint step. If the pump is not running, a setpoint of 0 hl/h should be specified. The display is in unit 15. The setpoint step is set in DFM no. 31 of group DFM1.

Parameterization:

Parameter	Value	Description
SOLL	0	Setpoint
SOLL_DINT	0	Setpoint Double-Integer
IST	0	Actual value

Parameter	Value	Description
IST_DINT	0	Actual value Double-Integer
InitActVal	0	Init DFM actual value at SetValue from recipe **= #**
Type	5	Art 5 = setpoint stage
PSK	0	Replacement value
Hilf	0	Help cell
QBit	U M	Feedback on inverted on user flag
QDat	-	-

Call DFM block in FB 1015:

	AN	M 657.6	Plant sect. 15 not running
	SPB	NEXT	Skip FC call, else
	CALL	FC 737	Processing group DFM1
	iDFM:=	31	DFM number = 31
NEXT:			

Line in file SW.INI:

Line	Contents
Line 287:	SW, hl/h, 1, 0, 5500;

ART = 6: Mask 32 of 32

Mask 32 of 32 supports recipe-controlled selection functions or route switches.

Upon starting basic operation, the setpoint is loaded into the setpoint cell. The setpoint is depicted in the actual value cell. The result flag is not set.

Depending on the rel. decoder number (0 ... 2) in parameter PSK, the setpoint is transferred in the 32 bits of the flag range by the specified decoder and can be evaluated in the basic operation.

The corresponding flag bytes are occupied from high byte to low byte.

Flag range for rel. decoder numbers 0 ... 2:

- Rel. decoder no. = 0:MB 688 ... 691
- Rel. decoder no. = 1:MB 696 ... 699
- Rel. decoder no. = 2:MB 704 ... 707

Example:

16 bits from mask 32 of 32 are to be used for a route switch, whereby the setpoint is to be depicted in decoder no. 1. The call is only made in basic operation 312. Mask 32 of 32 is to be parameterized in DFM no. 73 of group DFM1.

Parameterization:

Parameter	Value	Description
SOLL	0	Setpoint
SOLL_DINT	0	Setpoint Double-Integer
IST	0	Actual value
IST_DINT	0	Actual value Double-Integer
InitActVal	0	Init DFM actual value at SetValue from recipe **= #**
Type	6	Art 6 = mask 32 of 32
PSK	1	Decoder no. = 1
Hilf	0	Help cell
QBit	-	-
QDat	-	-

Call DFM block in FC 1312:

	U	M 102.3	Pulse step end
	SPB	NEXT	Skip FC call, else
	CALL	FC 737	Processing group DFM1
	iDfm:=	73	DFM number = 73
NEXT:			

Line in file SW.INI:

Line	Contents
Line 329:	16Bit, Bits, 0, 0, 0;

Decoder 1, i.e. MB 696, MB 697, MB 698, MB 699

e.g. Setpoint = 5 --> MB 699 = 00000101

ART = 7: Decoder 1 of 64

This decoder supports recipe-controlled selection functions or route switches and operating modes.

The setpoint is transferred into the appropriate cell at basic operation start. The setpoint is depicted in the actual value cell. At a setpoint ≤ 0 the DFM result flag is set.

Depending on the rel. decoder number (0 ... 2) in parameter PSK, the relevant flag can be set in the specified decoder by stipulating a setpoint of 1 ... 64. This flag can then be evaluated in the basic operation.

The corresponding flag bytes are occupied from high byte to low byte.

Flag range for rel. decoder numbers 0 ... 2:

- Rel. decoder no. = 0:MB 688 ... 695
- Rel. decoder no. = 1:MB 696 ... 703
- Rel. decoder no. = 2:MB 704 ... 711

Example 1:

For the silo selection (silo 0...23), decoder 1 of 64 is to be used. Depending on the setpoint, a flag is set in decoder no. 0. The call is only performed in basic operation 11. The decoder target is to be parameterized in DFM no. 74 of group DFM1.

Parameterization:

Parameter	Value	Description
SOLL	0	Setpoint
SOLL_DINT	0	Setpoint double integer
IST	0	Actual value
IST_DINT	0	Actual value double integer
InitActVal	0	Init DFM actual value at SetValue from recipe **= #**
Type	7	Type 7 = decoder 1 of 64
PSK	0	Decoder no. = 0
Hilf	0	Help cell
QBit	-	-
QDat	-	-

Call DFM block In FC 1011:

	A	M 102.3	Pulse step end
	SPB	NEXT	Skip FC call, else
	CALL	FC 737	Processing group DFM1
	iDFM:=	74	DFM number = 74
NEXT			

Line in file SW.INI:

Line	Contents
Line 287:	SW, silo no., 0, 0, 23;

Decoder 0, i.e. MB 688 ... MB 695,

e.g. setpoint = 7 → M 688.6 = "1" (MB 688 = 01000000)

Example 2:

A text list should be used to select which steam valves are to be opened when heating up. Dependent on the text number in the text list, a flag is set in decoder no. 2 by decoder 1 of 64. The call is only performed in basic operation 36. The decoder target is to be parameterized in DFM no. 75 of group DFM1.

Parameterization:

Parameter	Value	Description
SOLL	0	Setpoint
SOLL_DINT	0	Setpoint Double-Integer
IST	0	Actual value
IST_DINT	0	Actual value Double-Integer
InitActVal	0	Init DFM actual value at SetValue from recipe **= #**
Type	7	Type 7 = decoder 1 of 64
PSK	2	Decoder no. = 2
Hilf	0	Help cell
QBit	-	-
QDat	-	-

Call DFM block in FC 1036:

	A	M 102.3	Pulse step end
	SPB	NEXT	Skip FC call, else
	CALL	FC 737	Processing group DFM1
	IDFM:=	75	DFM number = 75
NEXT			

Line in file SW.INI:

Line	Contents
Line 287:	Index steam -, 0, 3, DAMPF;

Text list "windcs\PCUxxx\TEXTE\DAMPF.TXT"

Line	Contents	Description
Line 0:		Blank line
Line 1:	Steam valve D101	Upon selection: SW = 1 → M
Line 2:	Steam valve D102	Upon selection: SW = 2 → M
Line 3:	Steam valve D101+D102	Upon selection: SW = 3 → M

TYPE = 8: Allocation block

When processing the DFM as an allocation block, a data block (QBit = 0) is opened.

The number of the data block (DB) is specified in parameter PSK. The setpoint is transferred from the recipe list into this open data block as a double word. The data word address of the target data block is stored in the Help parameter. In addition, the Help parameter is increased by two and the so addressed double word is loaded into the actual value cell from the data block as an actual value. The DFM result flag is irrelevant.

Example:

The allocation block is used for transferring the setpoint of a temperature in DB 62, DW 8. The call is only performed in basic operation 25. The decoder target should be parameterized in DFM no. 126 of group DFM2.

Parameterization:

Parameter	Value	Description
SOLL	0	Setpoint
SOLL_DINT	0	Setpoint Double-Integer
IST	0	Actual value
IST_DINT	0	Actual value Double-Integer
InitActVal	0	Init DFM actual value at SetValue from recipe = #
Type	8	Art 8 = allocation block
PSK	62	Target DX number
Hilf	8	Target DW (double word)
Qbit	-	-
Qdat	-	-

Call DFM block in FC 1025:

	O	M 102.3	Pulse step end
	ON	M 54.7	Flank flag
	SPB	NEXT	Skip FC call, else
	CALL	FC 738	Processing group DFM2
	iDFM:=	126	DFM number = 126
NEXT:			

Line in file SW.INI:

Line	Contents
Line 688:	SW, °C, 1, 200, 1200;

TYPE = 10: Target/Actual value cell

This type serves for setting a setpoint from the recipe list and displaying the actual value from the plant providing, for example, a controller setpoint and displaying the actual value of the control path as the return value.

The setpoint is transferred into the appropriate cell at basic operation start.

The source of the actual value (e.g. AIN, 8, XIST) is configured in parameter QDat.

The DFM result flag is irrelevant.

Example:

The setpoint flow is specified as a setpoint for a frequency controlled pump. The current value of the flow is displayed here. The flow (AIN 8) should be displayed with one decimal place in sequence 15. The target-/actual value cell should be parameterized in DFM no. 42 of group DFM1.

Parameterization:

Parameter	Value	Description
SOLL	0	Setpoint
SOLL_DINT	0	Setpoint Double-Integer
IST	0	Actual value
IST_DINT	0	Actual value Double-Integer
InitActVal	0	Init DFM actual value at SetValue from recipe = #
Type	10	Art 10 = target/actual value cell
PSK	0	Replacement value
Hilf	0	Help cell
QBit	-	
QDat	AIN,8,XIST	Actual source

```
Call DFM block in FB 1015:
        AN      M 657.6     // Plant sect. 15 not running
        SPB     NEXT        // Skip FC call, else
        CALL    FC 737      // Processing group DFM1
        iDFM:=  42          // DFM number = 42
NEXT:
```

Line in file SW.INI:

Line	Contents
Line 298:	SW, hl/h, 1, 0, 1000;

3.6.4 DFM3 - User

In the S7 version, the DFM3 was implemented with the same functionality as DFM1 and DFM2. As a result, 4*255 DFM objects are available.

Now as ever DFM3 can be used for extra functions,

for example as target/actual value cells for weight and tolerance of weighers. In this case, the call of FC 739 for operating/result evaluation would be dropped.

3.6.5 Result flag of DFM blocks DFM1, DFM2, and DFM3

									DFM1	DFM2	DFM3
	Bit address								Result flag		
									Byte address		
	0	1	2	3	4	5	6	7	Flag		
	1	2	3	4	5	6	7	8	760	792	824
	9	10	11	12	13	14	15	16	761	793	825
	17	18	19	20	21	22	23	24	762	794	826
	25	26	27	28	29	30	31	32	763	795	827
	33	34	35	36	37	38	39	40	764	796	828
	41	42	43	44	45	46	47	48	765	797	829
	49	50	51	52	53	54	55	56	766	798	830
	57	58	59	60	61	62	63	64	767	799	831
	65	66	67	68	69	70	71	72	768	800	832
D	73	74	75	76	77	78	79	80	769	801	833
F	81	82	83	84	85	86	87	88	770	802	834
M	89	90	91	92	93	94	95	96	771	803	835
	97	98	99	100	101	102	103	104	772	804	836
N	105	106	107	108	109	110	111	112	773	805	837
U	113	114	115	116	117	118	119	120	774	806	838
M	121	122	123	124	125	126	127	128	775	807	839
B	129	130	131	132	133	134	135	136	776	808	840
E	137	138	139	140	141	142	143	144	777	809	841
R	145	146	147	148	149	150	151	152	778	810	842
	153	154	155	156	157	158	159	160	779	811	843
	161	162	163	164	165	166	167	168	780	812	844
	169	170	171	172	173	174	175	176	781	813	845
	177	178	179	180	181	182	183	184	782	814	846
	185	186	187	188	189	190	191	192	783	815	847
	193	194	195	196	197	198	199	200	784	816	848
	201	202	203	204	205	206	207	208	785	817	849
	209	210	211	212	213	214	215	216	786	818	850
	217	218	219	220	221	222	223	224	787	819	851

									DFM1	DFM2	DFM3
	Bit address								Result flag		
									Byte address		
	0	1	2	3	4	5	6	7	Flag		
	225	226	227	228	229	230	231	232	788	820	852
	233	234	235	236	237	238	239	240	789	821	853
	241	242	243	244	245	246	247	248	790	822	854
	249	250	251	252	253	254	255		791	823	855

Example:

DFM 1.44	DFM result flag	M 765.3
DFM 2.85	DFM result flag	M 802.4

3.7 THRESTEP - Three-step controller

The block contains all necessary functions for a max. of 96 controllers per PCU. The controller is suitable for fixed setpoint control in temperature and pressure control loops.

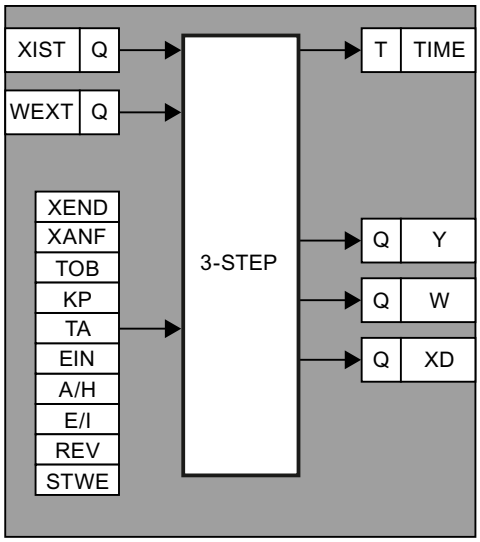

The controller deviation XD is derived from the actual value XIST, which is available as a source parameter, and from either an external setpoint WEXT available as a source parameter, or an internal setpoint W.

Parameter sets:	Parameterization THRESTEP PCU
	Text parameterization THRESTEP IOS
	Controller parameterization THRESTEP IOS
Assignment:	Controller to controller groups (preassignment)
Description:	Automatic mode, Manual mode, user program

Operation modes:	ON/OFF, MANUAL/AUTO, EXTERNAL/INTERNAL
Assignment:	Time steps THRESTEP Direction bit "ANST" (OPEN/CLOSED) bit in the DB744 for actuator open or close THRESTEP
Example:	Allocation program time step to outputs
Parameter:	Sampling parameter SEQ

Global data for block THRESTEP: Parameterization PCU

THRESTEP PCU		DB744		Sets: max. 96 per PCU
No.	NAME	TYPE	Preset	Comment
1	DREIPAnz	I16	1	Three-step count
2	DS_Len	I16	50	Data set length
3*	Offset	I16	300	Offset to 1st data record
4*	MaxDS	I16	96	Maximum DS count
5*	OffsRun	I16	100	Offset to runtime copy

* hidden attributes

Parameter sets for block THRESTEP: Parameterization PCU

THRESTEP PCU		DB744		Sets: max. 96 per PCU
No.	NAME	TYPE	Preset	Comment
1	SEQU	I8	0	Assigned sequence
2	XIST	Quell	8000 Hex	Actual value of type I16 !
3	WEXT	Quell	8000 Hex	External setpoint of type I16 !
4	W	I16	0	Effective setpoint
5	XEND	I16	1000	End limit for XIST, WEXT, W
6	XANF	I16	0	Start limit for XIST, WEXT, W
7	XD	I16	0	Control deviation
8	TOB	I16	5	Dead band
9	KP	I16	255	Response time amplification factor
10	Y	I16	0	Manipulated variable in 100 msec.
11	TA	I16	1	Sampling time in seconds (0=Lock)
12	EIN	B1	0	Controller On/Off = 1/0
13	A/H	B1	0	Operation mode: 0/1 = Auto/Manual
14	E/I	B1	0	Setpoint: 0/1 = external/internal
15	REV	B1	0	Reversing duty: 0/1 = No/Yes
16	MESS	B1	0	Measured value monitoring
17	ANST	B1	1	Trigger close/open = 0/1
18	STWE	I16	255	Variable in manual operation in 100 msec.
19	OPEN	B1	0	Trigger open = 1
20	ZU	B1	0	Trigger close = 1

THRESTEP PCU		DB744		Sets: max. 96 per PCU
21	X	I16	0	External actual value
22	Wex	I16	0	External setpoint
23*	Error	B1	0	Processing error
24	INT_US	I16	0	Used internally
25*	Status	I16	0	Status as word

* hidden attributes

Parameter sets IOS: 3-step controller - Text parameterization IOS

THRESTEP IOS			Sets: max. 96 per PCU
No.	Type	Preset	Comment
1	Z16	3PU xxx	Block name

Controller parameterization IOS

4 controllers may be displayed and operated on one page of the screen. One screen page corresponds to a 3-step controller group. The assignment of which controller is represented in which group and on which page is carried out in the file "\PCUxxx\REGLER\BLD3PKT.INI".

Name	Description
[GROUPxxx]	Number of group = page of screen
Name=	Name of group
Controler=	Numbers of the PID controllers to be displayed
DIM=	Dimensions
DEP=	Decimal points (number of decimal places)

Example:

In the controller mask 1, the controller numbers 1, 3, 8, 14 are to be shown.

The dimension °C is assigned to controllers 1 and 3 with one decimal place.

The dimension mbar is assigned to controllers 8 and 14 with two decimal places.

Name	Description
[GROUP001]	Screen page 1
Name="Tank-1+2"	Name of group
Controler=1,3,8,14	Numbers of the 3-step controllers to be shown
DIM=°C,°C,mbar,mbar	Dimensions of the individual controllers
DEP=1,1,2,2	Decimal points (number of decimal places)

Operation of 3-step controller

Automatic mode

The controller deviation (XD) is compared with a dead band (TOB).

- If the absolute value for XD is smaller than TOB, no actuation commands are generated.
- Otherwise, a time step is started with a value which is calculated using the formula:
  Y [in 100 ms] = KP [actuating time gain factor in 100 ms] * 10 * ABS (XD / (XEND - XANF))
  There is no position feedback. The direction bit ("ANST") is derived from the sign of the control deviation. In reversing mode (REV = 1) the direction bit is inverted.

Manual mode

In order to allow operation of the controller in Manual mode, an adjustable time value "STWE" (variable/manual operation) is output as required by the time step.
The output is actuated by setting the bits "closed" or "open":

- When "Closed" ("Open") has the value 1, the bit "AIN" is set and the direction bit (ANST") assumes the value 0 (1).
- When "Closed" ("Open") has the value 1, the bit "AIN" is set and the direction bit (ANST") assumes the value 0 (1).
- If the time step is not running in Manual mode Y = 0 and bit AIN = 0 are set.

User program

The time step can be called up from a user program and the outputs for "more" or "less" can be actuated with the direction bit.

The user program must run at the 100 ms rate.

The bit for measured value monitoring (AIN) registers whether the actual value has left the dead band upward or downward (AIN = 1). The bit is zero, if the actual value reaches the setpoint (AIN = 0).

If TOB = 0, AIN = 1 as soon as XIST >< W (see diagram)

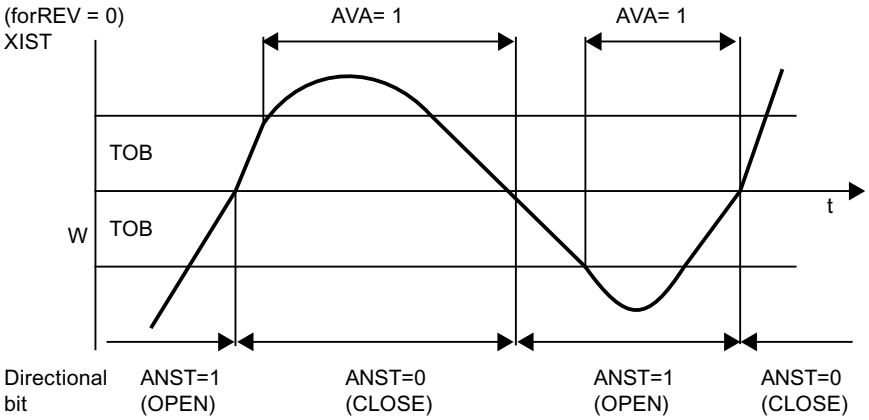

Operation modes 3-step controller

Operation mode	Function
ON/OFF	In the case of "OFF" the time step is loaded with the value 0. The bit "AIN" (see parameter set THRESTEP PCU) is set at "0". XD is calculated. In the case of "ON", control operation takes place insofar as "AUTO" is also present.
MANUAL/AUTO	In the case of "MANUAL", the time step is only actuated when an OPEN or CLOSE operation takes place. The actuating time in manual operation "STWE" is taken as the time value. In the user program the control elements can be actuated. In the "AUTO" mode, control operation takes place.
EXTERNAL/ INTERNAL	In the case of "EXTERNAL, "WEXT" is used as the setpoint, in the case of "INTERNAL" the setpoint "W", which can, for example, be specified by screen.

Assignment of time step block THRESTEP

No.	Time step	No.	Time step	No.	Flag	No.	Time step
1	T 128	25	T 152	49	T 176	73	T 200
2	T 129	26	T 153	50	T 177	74	T 201
3	T 130	27	T 154	51	T 178	75	T 202
4	T 131	28	T 155	52	T 179	76	T 203
5	T 132	29	T 156	53	T 180	77	T 204
6	T 133	30	T 157	54	T 181	78	T 205
7	T 134	31	T 158	55	T 182	79	T 206
8	T 135	32	T 159	56	T 183	80	T 207
9	T 136	33	T 160	57	T 184	81	T 208
10	T 137	34	T 161	58	T 185	82	T 209
11	T 138	35	T 162	59	T 186	83	T 210
12	T 139	36	T 163	60	T 187	84	T 211
13	T 140	37	T 164	61	T 188	85	T 212
14	T 141	38	T 165	62	T 189	86	T 213
15	T 142	39	T 166	63	T 190	87	T 214
16	T 143	40	T 167	64	T 191	88	T 215
17	T 144	41	T 168	65	T 192	89	T 216
18	T 145	42	T 169	66	T 193	90	T 217
19	T 146	43	T 170	67	T 194	91	T 218
20	T 147	44	T 171	68	T 195	92	T 219
21	T 148	45	T 172	69	T 196	93	T 220
22	T 149	46	T 173	70	T 197	94	T 221
23	T 150	47	T 174	71	T 198	95	T 222
24	T 151	48	T 175	72	T 199	96	T 223

Assignment of the direction bit "ANST" block THRESTEP

OPEN/CLOSED flag for actuator open/close THRESTEP

No.	Flag	No.	Flag	No.	Flag	No.	Flag
1	M 1208.0	25	M 1211.0	49	M 1214.0	73	M 1217.0
2	M 1208.1	26	M 1211.1	50	M 1214.1	74	M 1217.1
3	M 1208.2	27	M 1211.2	51	M 1214.2	75	M 1217.2
4	M 1208.3	28	M 1211.3	52	M 1214.3	76	M 1217.3
5	M 1208.4	29	M 1211.4	53	M 1214.4	77	M 1217.4
6	M 1208.5	30	M 1211.5	54	M 1214.5	78	M 1217.5
7	M 1208.6	31	M 1211.6	55	M 1214.6	79	M 1217.6
8	M 1208.7	32	M 1211.7	56	M 1214.7	80	M 1217.7
9	M 1209.0	33	M 1212.0	57	M 1215.0	81	M 1218.0
10	M 1209.1	34	M 1212.1	58	M 1215.1	82	M 1218.1
11	M 1209.2	35	M 1212.2	59	M 1215.2	83	M 1218.2
12	M 1209.3	36	M 1212.3	60	M 1215.3	84	M 1218.3
13	M 1209.4	37	M 1212.4	61	M 1215.4	85	M 1218.4
14	M 1209.5	38	M 1212.5	62	M 1215.5	86	M 1218.5
15	M 1209.6	39	M 1212.6	63	M 1215.6	87	M 1218.6
16	M 1209.7	40	M 1212.7	64	M 1215.7	88	M 1218.7
17	M 1210.0	41	M 1213.0	65	M 1216.0	89	M 1219.0
18	M 1210.1	42	M 1213.1	66	M 1216.1	90	M 1219.1
19	M 1210.2	43	M 1213.2	67	M 1216.2	91	M 1219.2
20	M 1210.3	44	M 1213.3	68	M 1216.3	92	M 1219.3
21	M 1210.4	45	M 1213.4	69	M 1216.4	93	M 1219.4
22	M 1210.5	46	M 1213.5	70	M 1216.5	94	M 1219.5
23	M 1210.6	47	M 1213.6	71	M 1216.6	95	M 1219.6
24	M 1210.7	48	M 1213.7	72	M 1216.7	96	M 1219.7

Allocation program time step to outputs

```
 Example:
A    T128              // Time step 3-step 1
A    M 1208.0          // Trigger bit "Open" = 1
=    Q x.x             // Set output for actuator open

A    T128
AN   M 1208.0          // Trigger bit for "CLOSE" = 0
=    Q x.y             // Set output for actuator close
```

3.8 ICM - Individual Control Modules (ICM1 ICM2 ICM3 ICM4)

Basics

The ICM groups 3 and 4 are enabled by default as of version V6.0 SP1. Instructions for enabling can be found at the end of this chapter.

The individual control module (ICM) handles interlocking, operation, and monitoring of up to 510 (per PCU) actuators such as valves, motors, etc.

One parameter set is assigned to each ICM. Actuator name, type, and monitoring time, etc. are stored here.

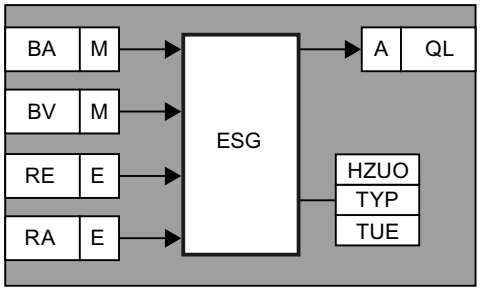

Defined flags form the interface to the automatic programs (e.g. basic operations) and to an interlocking program provided for each ICM.

Parameter set:	Parameterization PCU, text parameterization IOS
Assignment:	Actuator type
Process interface:	DB601 ... 605
User interface:	FB 1226 ...1229 BV assignment ICM group 1 and 2 FB 1230 ... 1233 BV assignment ICM group 3 and 4
ICM user interface:	BV, BA, RE, RA, QL, HUP, HUPS
ICM status bits:	CM, QSP, HD
Example:	Actuator triggering
User interface:	Signal allocation for the actuator group 1 and 4

Global data for block ICM: Parameterization PCU

ICM1 **ICM2** **ICM3** **ICM4**		**DB 726** **DB 743** **DB 748** **DB 749**		**Sets:** **Each group max. 255 per PCU**
No.	**NAME**	**TYPE**	**Preset**	**Comment**
1	ICMCount	I16	1	ICMx count
2	DS_Len	Byte	28	Data set length
3*	Offset	I16	300	Offset to 1st data record
4*	MaxDS	I16	255	Maximum DS count
5*	OffsRun	I16	100	Offset to runtime copy

Parameter sets for block ICM: Parameterization PCU

ICM1 ICM2 ICM3 ICM4		DB 726 DB 743 DB 748 DB 749		Sets: max. 255 per PCU for ICM group 1 max. 255 per PCU for ICM group 2 max. 255 per PCU for ICM group 3 max. 255 per PCU for ICM group 4
No.	NAME	TYPE	Preset	Comment
1*	STAT	I16	0	ICM status bits
2	SEQU	I8	0	Assigned sequence
3	HZUO	I8	1	Manual group assignment 1..64, 0 none, >64 HAND=1
4	TYPE	I8	49	ICM type see table Type 8..13, 16..21, 32..38, 48..53, 128=blocked
5	TUE	I8	10	Monitoring time in seconds
6*	TUEI	I8	10	Actual value monitoring time in seconds
7*	QL	B1	0	Load output
8*	CM	B1	0	Command memory
9*	QSP	B1	0	Error memory
10*	BV	B1	0	Operation interlock
11*	BA	B1	0	Command Automatic
12*	RA	B1	0	Feedback Off
13*	RE	B1	0	Feedback on **Caution:** always "positive logic" here – regardless of ICM type
14*	HD	B1	0	1= Manual, 0= Automatic
15*	M	B1	0	Maintenance
16*	ABM	B1	0	Affected by Maintenance
17*	REQM	B1	0	Request M
18*	ResREQM	B1	0	Request: Reset 'Deactivation'
19*	REQABM	B1	0	Request ABM
20*	ResREQABM	B1	0	Request: Reset 'Deactivation'
21*	SETM	B1	0	Set M
22*	RESETM	B1	0	Reset M
23*	DIAGINFO	B1	0	Diagnose
24*	Anz	B1	0	Monitoring ICM display
25*	ERRCOUNT	I32	0	Error counter
26*	OldQSP	B1	0	Old value QSP
27*	Warning	B1	0	Warning by start
28*	Evz	B1	0	Switch-on delay is running
29*	CMEvz	B1	0	CM switch-on delay
30*	Avz	B1	0	Switch-off delay
31*	CMAvz	B1	0	CM switch-off delay
32	SollEvz	I16	0	Setpoint switch-on delay
33*	IstEvz	I16	0	Actual value switch-on delay

ICM1 ICM2 ICM3 ICM4		DB 726 DB 743 DB 748 DB 749		Sets: max. 255 per PCU for ICM group 1 max. 255 per PCU for ICM group 2 max. 255 per PCU for ICM group 3 max. 255 per PCU for ICM group 4
No.	NAME	TYPE	Preset	Comment
34	SollAvz	I16	0	Setpoint switch-off delay
35	IstAvz	I16	0	Actual value switch-off delay
36	InvertQL	B1	0	Load output to invert
37	NoRetSig	B1	0	ICM without feedback
38*	T100MS	I8	0	0=1sec >0 time 100 ms ICM
39	WarnON	B1	0	Enable warning by start
40	ForceEna	B1	0	Forcing enable
41	SIM	B1	0	Simulation RE/RA
42*	StatusDD	I32	0	Status as Dword
43	FltTime	I8	0	Fault time in seconds (0-15 s) bit 0..3 = setpoint, bit 4..7 = actual value
44*	FltRunO	B1	0	Fault time run out

*) hidden attributes

For each ICM a switch-on and switch-off delay may be configured. This is only active, if the ICM is in Automatic mode.

The signal of the load output QL may be inverted by a corresponding configuration.

In case of ICMs without feedback, the feedback will be simulated internally.

Error time:

- Error time monitoring is independent of the ON / OFF control, i.e. it starts when the feedback does not match the control.
- Exiting the feedback matching the control is reported once the error time expires (0-15 s). In this way, you can compensate for the bouncing of limit switches and similar.
- If the TUE monitoring time is longer than the 'FltTime' error time, the error memory is only set once the monitoring time expires.

Text parameterization IOS

ICM1 ICM2 ICM3 ICM4			Sets: Each group max. 255 per PCU
No.	Type	Preset	Comment
1	Z16	ICMx xxx	Block name

Assignment of actuator type for ICM block

The parameter type consists of bits with the following meaning:

Bit0:	Feedback with positive logic
Bit1:	No Feedback OFF
Bit2:	Motor
Bit3:	-
Bit4:	"Internal“ manual control level
Bit5:	Without override
Bit6:	-
Bit7:	Working disruption

TYPE	Actuator	Checkback RE	Checkback RA	Manual level
				Hardware level subordinated (bumplessness when Manual → Auto)
8	Valve	0 = open		External, with override
9	Valve	1 = open		External, with override
11	Valve	1 = open	1 = closed	External, with override
12	Motor	0 = on		External, with override
13	Motor	1 = on		External, with override
				Manual level in PCU (bumplessness when Manual → Auto)
16	Valve	0 = open		Internal, with override
17	Valve	1 = open		Internal, with override
19	Valve	1 = open	1 = closed	Internal, with override
20	Motor	0 = on		Internal, with override
21	Motor	1 = on		Internal, with override
				Hardware level subordinated (no bumplessness when Manual → Auto)
32	Valve	0 = open		External, without override
33	Valve	1 = open		External, without override
35	Valve	1 = open	1 = closed	External, without override
36	Motor	0 = on		External, without override
37	Motor	1 = on		External, without override
				Manual level in PCU (no bumplessness when Manual → Auto)
48	Valve	0 = open		Internal, without override
49	Valve	1 = open		Internal, without override
51	Valve	1 = open	1 = closed	Internal, without override
52	Motor	0 = on		Internal, without override

TYPE	Actuator	Checkback RE	Checkback RA	Manual level
53	Motor	1 = on		Internal, without override
128-255	ICM blocked			ICM is not processed

When the actuator is of type "Valve", the load output QL remains active in the event of a fault; when the type is "Motor", the load output is shut down.

Type	Description
Type 8 ... 13	With subordinated manual level (e.g. emergency control or C1 level) and bumpless switching Manual → Auto. During manual operation, the QL is switched off and the CM is tracked to RE. After switching to the system (Auto), the control state triggered by the subordinated level is maintained. In Automatic mode, the ICM can be operated via the screen.
Type 16 .. 21	Manual level in system and bumpless switching Manual → Auto. During manual operation in the operation mode Manual or Auto, the QL is tracked to the CM (with override in Automatic mode). During manual operation the BA has no influence. Manual operation is carried out via the screen or with a separate FB which reverses the CM in dependence of the keys of the manual inputs. When the operation mode has been switched from Manual to Automatic, the switching status of the actuator is maintained
Type 32 ... 37	With subordinated manual level (e.g. emergency control or C1 level) and no bumpless switching Manual → Auto. During manual operation, the QL is switched off and the CM is tracked to RE. After switching over to the system (Auto), the status of the BA in the CM is assumed.
Type 48 ... 53	Manual level in system and no bumpless switching Manual → Auto. During manual operation the QL is tracked to CM. During manual operation the BA has no influence. Manual operation is carried out via the screen or with a separate FB which reverses the CM in dependence of the keys of the manual inputs. After switching over from Manual → Auto, the status of the BA in the CM is assumed. Override is not possible in the Automatic mode. Notice: After quitting an ICM fault while in Auto mode, a pending "Command Automatic" will be overtaken into CM and the according ICM is switched on.

Process interface for ICM block

All system technology function blocks no longer directly access inputs, outputs, and flags. The following DB's are provided as an interface to the system FB's:

In the standard version, an allocation FC726 enables allocation to the input/output interface. This function block is left open to allow the user to adapt the I/O assignment to his own requirements (e.g. for an electrical terminal block).

DB no.	Function
601	ICM-BA
602	ICM-BV
603	ICM-RE (Feedback On)
604	ICM-RA (Feedback Off)
605	ICM-QL

The structure is the same for all data blocks.

BIT	7	6	5	4	3	2	1	0	BIT	7	6	5	4	3	2	1	0		
DBB									DBB										
10	8	7	6	5	4	3	2	1	11	16	15	14	13	12	11	10	9		
12	24	23	22	21	20	19	18	17	13	32	31	30	29	28	27	26	25		
14	40	39	38	37	36	35	34	33	15	48	47	46	45	44	43	42	41		
16	56	55	54	53	52	51	50	49	17	64	63	62	61	60	59	58	57		
18	72	71	70	69	68	67	66	65	19	80	79	78	77	76	75	74	73		
20	88	87	86	85	84	83	82	81	21	96	95	94	93	92	91	90	89		ICM
22	104	103	102	101	100	99	98	97	23	112	111	110	109	108	107	106	105	A	grp 1
24	120	119	118	117	116	115	114	113	25	128	127	126	125	124	123	122	121	C	
26	136	135	134	133	132	131	130	129	27	144	143	142	141	140	139	138	137	U	
28	152	151	150	149	148	147	146	145	29	160	159	158	157	156	155	154	153	A	
30	168	167	166	165	164	163	162	161	31	176	175	174	173	172	171	170	169	T	
32	184	183	182	181	180	179	178	177	33	192	191	190	189	188	187	186	185	O	
34	200	199	198	197	196	195	194	193	35	208	207	206	205	204	203	202	201	R	
36	216	215	214	213	212	211	210	209	37	224	223	222	221	220	219	218	217		
38	232	231	230	229	228	227	226	225	39	240	239	238	237	236	235	234	233		
40	248	247	246	245	244	243	242	241	41		255	254	253	252	251	250	249		
42	8	7	6	5	4	3	2	1	43	16	15	14	13	12	11	10	9	N	
44	24	23	22	21	20	19	18	17	45	32	31	30	29	28	27	26	25	U	
46	40	39	38	37	36	35	34	33	47	48	47	46	45	44	43	42	41	M	
48	56	55	54	53	52	51	50	49	49	64	63	62	61	60	59	58	57	B	
50	72	71	70	69	68	67	66	65	51	80	79	78	77	76	75	74	73	E	
52	88	87	86	85	84	83	82	81	53	96	95	94	93	92	91	90	89	R	ICM
54	104	103	102	101	100	99	98	97	55	112	111	110	109	108	107	106	105		grp 2
56	120	119	118	117	116	115	114	113	57	128	127	126	125	124	123	122	121		
58	136	135	134	133	132	131	130	129	59	144	143	142	141	140	139	138	137		
60	152	151	150	149	148	147	146	145	61	160	159	158	157	156	155	154	153		
62	168	167	166	165	164	163	162	161	63	176	175	174	173	172	171	170	169		
64	184	183	182	181	180	179	178	177	65	192	191	190	189	188	187	186	185		
66	200	199	198	197	196	195	194	193	67	208	207	206	205	204	203	202	201		
68	216	215	214	213	212	211	210	209	69	224	223	222	221	220	219	218	217		
70	232	231	230	229	228	227	226	225	71	240	239	238	237	236	235	234	233		
72	248	247	246	245	244	243	242	241	73		255	254	253	252	251	250	249		
74	8	7	6	5	4	3	2	1	75	16	15	14	13	12	11	10	9	N	

BIT	7	6	5	4	3	2	1	0	BIT	7	6	5	4	3	2	1	0		
DBB									DBB										
76	24	23	22	21	20	19	18	17	**77**	32	31	30	29	28	27	26	25	**U**	
78	40	39	38	37	36	35	34	33	**79**	48	47	46	45	44	43	42	41	**M**	
80	56	55	54	53	52	51	50	49	**81**	64	63	62	61	60	59	58	57	**B**	
82	72	71	70	69	68	67	66	65	**83**	80	79	78	77	76	75	74	73	**E**	
84	88	87	86	85	84	83	82	81	**85**	96	95	94	93	92	91	90	89	**R**	ICM
86	104	103	102	101	100	99	98	97	**87**	112	111	110	109	108	107	106	105		grp 3
88	120	119	118	117	116	115	114	113	**89**	128	127	126	125	124	123	122	121		
90	136	135	134	133	132	131	130	129	**91**	144	143	142	141	140	139	138	137		
92	152	151	150	149	148	147	146	145	**93**	160	159	158	157	156	155	154	153		
94	168	167	166	165	164	163	162	161	**95**	176	175	174	173	172	171	170	169		
96	184	183	182	181	180	179	178	177	**97**	192	191	190	189	188	187	186	185		
98	200	199	198	197	196	195	194	193	**99**	208	207	206	205	204	203	202	201		
100	216	215	214	213	212	211	210	209	**101**	224	223	222	221	220	219	218	217		
102	232	231	230	229	228	227	226	225	**103**	240	239	238	237	236	235	234	233		
104	248	247	246	245	244	243	242	241	**105**		255	254	253	252	251	250	249		
106	8	7	6	5	4	3	2	1	**107**	16	15	14	13	12	11	10	9	**N**	
108	24	23	22	21	20	19	18	17	**109**	32	31	30	29	28	27	26	25	**U**	
110	40	39	38	37	36	35	34	33	**111**	48	47	46	45	44	43	42	41	**M**	
112	56	55	54	53	52	51	50	49	**113**	64	63	62	61	60	59	58	57	**B**	
114	72	71	70	69	68	67	66	65	**115**	80	79	78	77	76	75	74	73	**E**	
116	88	87	86	85	84	83	82	81	**117**	96	95	94	93	92	91	90	89	**R**	ICM
118	104	103	102	101	100	99	98	97	**119**	112	111	110	109	108	107	106	105		grp 4
120	120	119	118	117	116	115	114	113	**121**	128	127	126	125	124	123	122	121		
122	136	135	134	133	132	131	130	129	**123**	144	143	142	141	140	139	138	137		
124	152	151	150	149	148	147	146	145	**125**	160	159	158	157	156	155	154	153		
126	168	167	166	165	164	163	162	161	**127**	176	175	174	173	172	171	170	169		
128	184	183	182	181	180	179	178	177	**129**	192	191	190	189	188	187	186	185		
130	200	199	198	197	196	195	194	193	**131**	208	207	206	205	204	203	202	201		
132	216	215	214	213	212	211	210	209	**133**	224	223	222	221	220	219	218	217		
134	232	231	230	229	228	227	226	225	**135**	240	239	238	237	236	235	234	233		
136	248	247	246	245	244	243	242	241	**137**		255	254	253	252	251	250	249		

User interface for ICM block

Each ICM has a segment in the ICM interlocking program (FB 1226...1233). Assignment of operational interlocks to interlocking programs:

FB no.	ICM – interlocks
FB1226	ICM1 - 1 ... 128
FB1227	ICM1 - 129 ... 255
FB1228	ICM2 - 1 ... 128
FB1229	ICM2 - 129 ... 255

FB no.	ICM – interlocks
FB1230	ICM3 - 1 ... 128
FB1231	ICM3 - 129 ... 255
FB1232	ICM4 - 1 ... 128
FB1233	ICM2 - 129 ... 255

The state of operation interlock is allocated to the Flag M 256.0 ... M 383.6 .

Each interlocking program segment must end with the operational interlock flag assignment:

Example:

ICM1-1

A	I 65.3	Binary input interlock
=	M 256.0	Binary interlock flag assignment ICM1

FB 1226 BV assignment ICM group 1 (1 ... 128)

MB	.0	.1	.2	.3	.4	.5	.6	.7	
256	1	2	3	4	5	6	7	8	ICM-NUMBER
257	9	10	11	12	13	14	15	16	
258	17	18	19	20	21	22	23	24	
259	25	26	27	28	29	30	31	32	
260	33	34	35	36	37	38	39	40	
261	41	42	43	44	45	46	47	48	
262	49	50	51	52	53	54	55	56	
263	57	58	59	60	61	62	63	64	
264	65	66	67	68	69	70	71	72	
265	73	74	75	76	77	78	79	80	
266	81	82	83	84	85	86	87	88	
267	89	90	91	92	93	94	95	96	
268	97	98	99	100	101	102	103	104	
269	105	106	107	108	109	110	111	112	
270	113	114	115	116	117	118	119	120	
271	121	122	123	124	125	126	127	128	

FB 1227 BV assignment ICM group 1 (129 ... 255)

MB	.0	.1	.2	.3	.4	.5	.6	.7	
272	129	130	131	132	133	134	135	136	ICM-NUMBER
273	137	138	139	140	141	142	143	144	
274	145	146	147	148	149	150	151	152	
275	153	154	155	156	157	158	159	160	
276	161	162	163	164	165	166	167	168	
277	169	170	171	172	173	174	175	176	
278	177	178	179	180	181	182	183	184	
279	185	186	187	188	189	190	191	192	
280	193	194	195	196	197	198	199	200	
281	201	202	203	204	205	206	207	208	
282	209	210	211	212	213	214	215	216	
283	217	218	219	220	221	222	223	224	
284	225	226	227	228	229	230	231	232	
285	233	234	235	236	237	238	239	240	
286	241	242	243	244	245	246	247	248	
287	249	250	251	252	253	254	255		

FB 1228 BV assignment ICM group 2 (1 ... 128)

MB	.0	.1	.2	.3	.4	.5	.6	.7	
288	1	2	3	4	5	6	7	8	ICM-NUMBER
289	9	10	11	12	13	14	15	16	
290	17	18	19	20	21	22	23	24	
291	25	26	27	28	29	30	31	32	
292	33	34	35	36	37	38	39	40	
293	41	42	43	44	45	46	47	48	
294	49	50	51	52	53	54	55	56	
295	57	58	59	60	61	62	63	64	
296	65	66	67	68	69	70	71	72	
297	73	74	75	76	77	78	79	80	
298	81	82	83	84	85	86	87	88	
299	89	90	91	92	93	94	95	96	
300	97	98	99	100	101	102	103	104	
301	105	106	107	108	109	110	111	112	
302	113	114	115	116	117	118	119	120	
303	121	122	123	124	125	126	127	128	

FB 1229 BV assignment ICM group 2 (129 ... 255)

MB	.0	.1	.2	.3	.4	.5	.6	.7	
304	129	130	131	132	133	134	135	136	I
305	137	138	139	140	141	142	143	144	C
306	145	146	147	148	149	150	151	152	M
307	153	154	155	156	157	158	159	160	-
308	161	162	163	164	165	166	167	168	N
309	169	170	171	172	173	174	175	176	U
310	177	178	179	180	181	182	183	184	M
311	185	186	187	188	189	190	191	192	B
312	193	194	195	196	197	198	199	200	E
313	201	202	203	204	205	206	207	208	R
314	209	210	211	212	213	214	215	216	
315	217	218	219	220	221	222	223	224	
316	225	226	227	228	229	230	231	232	
317	233	234	235	236	237	238	239	240	
318	241	242	243	244	245	246	247	248	
319	249	250	251	252	253	254	255		

FB 1230 BV assignment ICM group 3 (1 ... 128)

MB	.0	.1	.2	.3	.4	.5	.6	.7	
320	1	2	3	4	5	6	7	8	I
321	9	10	11	12	13	14	15	16	C
322	17	18	19	20	21	22	23	24	M
323	25	26	27	28	29	30	31	32	-
324	33	34	35	36	37	38	39	40	N
325	41	42	43	44	45	46	47	48	U
326	49	50	51	52	53	54	55	56	M
327	57	58	59	60	61	62	63	64	B
328	65	66	67	68	69	70	71	72	E
329	73	74	75	76	77	78	79	80	R
330	81	82	83	84	85	86	87	88	
331	89	90	91	92	93	94	95	96	
332	97	98	99	100	101	102	103	104	
333	105	106	107	108	109	110	111	112	
334	113	114	115	116	117	118	119	120	
335	121	122	123	124	125	126	127	128	

FB 1231 BV assignment ICM group 3 (129 ... 255)

MB	.0	.1	.2	.3	.4	.5	.6	.7	
336	129	130	131	132	133	134	135	136	ICM-NUMBER
337	137	138	139	140	141	142	143	144	
338	145	146	147	148	149	150	151	152	
339	153	154	155	156	157	158	159	160	
340	161	162	163	164	165	166	167	168	
341	169	170	171	172	173	174	175	176	
342	177	178	179	180	181	182	183	184	
343	185	186	187	188	189	190	191	192	
344	193	194	195	196	197	198	199	200	
345	201	202	203	204	205	206	207	208	
346	209	210	211	212	213	214	215	216	
347	217	218	219	220	221	222	223	224	
348	225	226	227	228	229	230	231	232	
349	233	234	235	236	237	238	239	240	
350	241	242	243	244	245	246	247	248	
351	249	250	251	252	253	254	255		

FB 1232 BV assignment ICM group 4 (1 ... 128)

MB	.0	.1	.2	.3	.4	.5	.6	.7	
352	1	2	3	4	5	6	7	8	ICM-NUMBER
353	9	10	11	12	13	14	15	16	
354	17	18	19	20	21	22	23	24	
355	25	26	27	28	29	30	31	32	
356	33	34	35	36	37	38	39	40	
357	41	42	43	44	45	46	47	48	
358	49	50	51	52	53	54	55	56	
359	57	58	59	60	61	62	63	64	
360	65	66	67	68	69	70	71	72	
361	73	74	75	76	77	78	79	80	
362	81	82	83	84	85	86	87	88	
363	89	90	91	92	93	94	95	96	
364	97	98	99	100	101	102	103	104	
365	105	106	107	108	109	110	111	112	
366	113	114	115	116	117	118	119	120	
367	121	122	123	124	125	126	127	128	

FB 1233 BV assignment ICM group 4 (129 ... 255)

MB	.0	.1	.2	.3	.4	.5	.6	.7	
368	129	130	131	132	133	134	135	136	I
369	137	138	139	140	141	142	143	144	C
370	145	146	147	148	149	150	151	152	M
371	153	154	155	156	157	158	159	160	-
372	161	162	163	164	165	166	167	168	N
373	169	170	171	172	173	174	175	176	U
374	177	178	179	180	181	182	183	184	M
375	185	186	187	188	189	190	191	192	B
376	193	194	195	196	197	198	199	200	E
377	201	202	203	204	205	206	207	208	R
378	209	210	211	212	213	214	215	216	
379	217	218	219	220	221	222	223	224	
380	225	226	227	228	229	230	231	232	
381	233	234	235	236	237	238	239	240	
382	241	242	243	244	245	246	247	248	
383	249	250	251	252	253	254	255		

User interface for ICM block

The connection of the individual control modules with the system, the user programs, and procedures is performed by the following signals:

		ICM1	ICM2	ICM3	ICM4
BV	Operation interlock For interlocking of actuator operation 0/1 = lock/release	M 256.0 – M 287.6	M 288.0 – M 319.6	M 320.0 – M 351.6	M 352.0 – M 383.6
BA	CommandAutomatic For the control of the final controlling elements out of basic operations or user-written programs	M 128.0 – M 159.6	M 160.0 – M 191.6	M 192.0 – M 223.6	M 224.0 – M 255.6
RE	Feedback On Actuator acknowledgment of the status “on” or “open” (for details, see table "Assignment of actuator type")	I 64.0 - I 95.6	I 96.0 - I 127.6	I192.0 – I223.6	I224.0 – I255.6
RA	Feedback Off Actuator acknowledgment of the status “off” or “closed” (for details see table "Assignment of actuator type")	I128.0 – I159.6	I160.0 – I191.6	I256.0 – I287.6	I288.0 – I319.6
QL	Load output For the control of the final controlling elements	O 64.0 - O 95.6	O96.0 – O 127.6	O128.0 – O159.6	O160.0 – O 191.6

		ICM1	ICM2	ICM3	ICM4
HUP	Hooter operation Activated when there is an ICM error, processing and reset by user	M 99.5	M 99.5	M 99.5	M 99.5
HUPS	Hooter operation group flag Activated when there is an ICM, AIN, and SEQU error, processing and reset by user	M 107.1	M 107.1	M 107.1	M 107.1

Status bits ICM block

The ICM block has the following internal bits:

ICM	
CM	Command memory Indicates the target circuit state of the actuator. • In automatic mode (HD = 0): The CM is changed at a signal change of the BA or though operator input on the screen. Both types of activation have the same rights. By changing the CM, the monitoring time is triggered. • In manual mode: The CM is adapted to the Feedback On. If for an outstanding CA, the actuator is switched off via the IL interlock and subsequently released again, the CA command is transferred again, i.e. the control unit is controlled again.
QSP	Error memory is activated when operation monitoring responds or by double acknowledgment and can be reset using the "QUITT" key if there is coincidence between CM and Acknowledgment. Automatic report via error message printer and hooter operation flag (M99.5), if error type ICM is released.
HD	Manual mode indicates whether Manual mode (HD = 1) or Automatic mode (HD = 0) is activated. The bit is manipulated by the system block "Manual Signal Distributor".

Example:

Actuator triggering

The operation of the individual control modules from the block PROGRAM USER or basic operations is carried out via the standardized communications interface.

CA: Command Automatic
ICM1: M 128.0 -M 159.6
ICM2: M 160.0 -M 191.6
ICM3: M 192.0 -M 223.6
ICM4: M 224.0 – M 255.6

The BA flag is for triggering the actuators from the basic operations (switching on/off) or the block USER PROGRAM.

Signal occupancy CA for the actuators 1 to 255: see signal occupancy table.

Example:

Assignment group 1:	
ICM1	= M 128.0
ICM2	= M 128.1
ICM9	= M 129.0
ICM255	= M 159.6

Example ICM1:

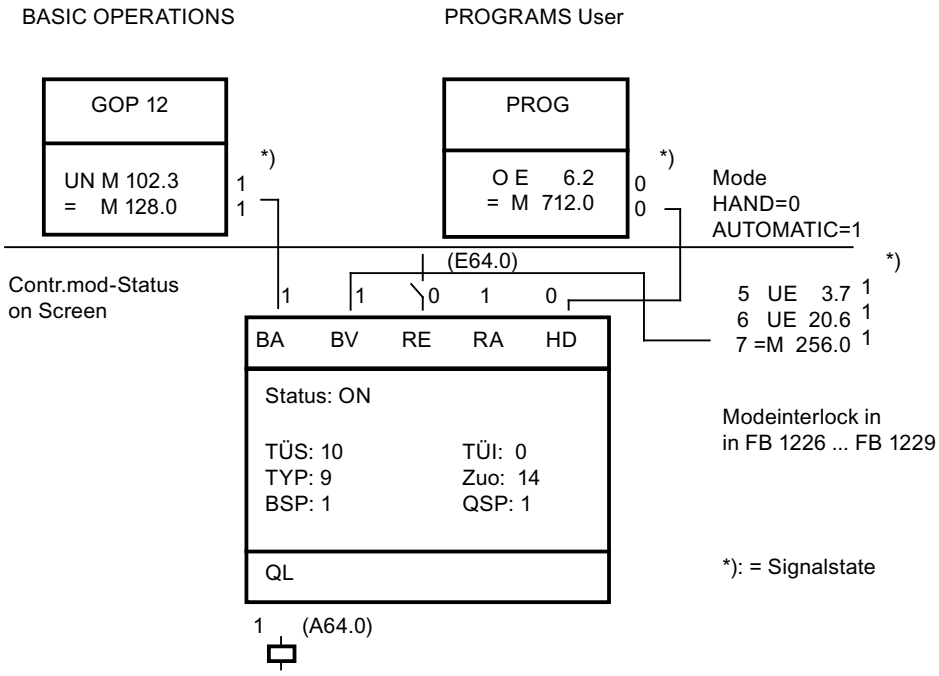

User interface for ICM block

Signal allocation for the control module groups 1 and 2

									ICM group 1 (1 ... 255)					ICM group 2 (1 ... 255)				
	Bit address																	
									BV	BA	RE	RA	QL	BV	BA	RE	RA	QL
	0	1	2	3	4	5	6	7	(F)	(F)	(I)	(I)	(O)	(F)	(F)	(I)	(I)	(O)
	1	2	3	4	5	6	7	8	256	128	64	128	64	288	160	96	160	96
	9	10	11	12	13	14	15	16	257	129	65	129	65	289	161	97	161	97
	17	18	19	20	21	22	23	24	258	130	66	130	66	290	162	98	162	98
	25	26	27	28	29	30	31	32	259	131	67	131	67	291	163	99	163	99
	33	34	35	36	37	38	39	40	260	132	68	132	68	292	164	100	164	100
	41	42	43	44	45	46	47	48	261	133	69	133	69	293	165	101	165	101

									ICM group 1 (1 ... 255)					ICM group 2 (1 ... 255)				
	Bit address																	
									BV	BA	RE	RA	QL	BV	BA	RE	RA	QL
	0	1	2	3	4	5	6	7	(F)	(F)	(I)	(I)	(O)	(F)	(F)	(I)	(I)	(O)
	49	50	51	52	53	54	55	56	262	134	70	134	70	294	166	102	166	102
	57	58	59	60	61	62	63	64	263	135	71	135	71	295	167	103	167	103
	65	66	67	68	69	70	71	72	264	136	72	136	72	296	168	104	168	104
I	73	74	75	76	77	78	79	80	265	137	73	137	73	297	169	105	169	105
C	81	82	83	84	85	86	87	88	266	138	74	138	74	298	170	106	170	106
M	89	90	91	92	93	94	95	96	267	139	75	139	75	299	171	107	171	107
	97	98	99	100	101	102	103	104	268	140	76	140	76	300	172	108	172	108
N	105	106	107	108	109	110	111	112	269	141	77	141	77	301	173	109	173	109
U	113	114	115	116	117	118	119	120	270	142	78	142	78	302	174	110	174	110
M	121	122	123	124	125	126	127	128	271	143	79	143	79	303	175	111	175	111
B	129	130	131	132	133	134	135	136	272	144	80	144	80	304	176	112	176	112
E	137	138	139	140	141	142	143	144	273	145	81	145	81	305	177	113	177	113
R	145	146	147	148	149	150	151	152	274	146	82	146	82	306	178	114	178	114
	153	154	155	156	157	158	159	160	275	147	83	147	83	307	179	115	179	115
	161	162	163	164	165	166	167	168	276	148	84	148	84	308	180	116	180	116
	169	170	171	172	173	174	175	176	277	149	85	149	85	309	181	117	181	117
	177	178	179	180	181	182	183	184	278	150	86	150	86	310	182	118	182	118
	185	186	187	188	189	190	191	192	279	151	87	151	87	311	183	119	183	119
	193	194	195	196	197	198	199	200	280	152	88	152	88	312	184	120	184	120
	201	202	203	204	205	206	207	208	281	153	89	153	89	313	185	121	185	121
	209	210	211	212	213	214	215	216	282	154	90	154	90	314	186	122	186	122
	217	218	219	220	221	222	223	224	283	155	91	155	91	315	187	123	187	123
	225	226	227	228	229	230	231	232	284	156	92	156	92	316	188	124	188	124
	233	234	235	236	237	238	239	240	285	157	93	157	93	317	189	125	189	125
	241	242	243	244	245	246	247	248	286	158	94	158	94	318	190	126	190	126
	249	250	251	252	253	254	255		287	159	95	159	95	319	191	127	191	127

Signal allocation for the control module groups 3 and 4

									ICM group 3 (1 ... 255)					ICM group 4 (1 ... 255)				
	Bit address																	
									BV	BA	RE	RA	QL	BV	BA	RE	RA	QL
	0	1	2	3	4	5	6	7	(F)	(F)	(I)	(I)	(O)	(F)	(F)	(I)	(I)	(O)
	1	2	3	4	5	6	7	8	320	192	192	256	128	352	224	224	288	160
	9	10	11	12	13	14	15	16	321	193	193	257	129	353	225	225	289	161
	17	18	19	20	21	22	23	24	322	194	194	258	130	354	226	226	290	162
	25	26	27	28	29	30	31	32	323	195	195	259	131	355	227	227	291	163
	33	34	35	36	37	38	39	40	324	196	196	260	132	356	228	228	292	164
	41	42	43	44	45	46	47	48	325	197	197	261	133	357	229	229	293	165
	49	50	51	52	53	54	55	56	326	198	198	262	134	358	230	230	294	166

									ICM group 3 (1 ... 255)					ICM group 4 (1 ... 255)				
	Bit address																	
									BV	BA	RE	RA	QL	BV	BA	RE	RA	QL
	0	1	2	3	4	5	6	7	(F)	(F)	(I)	(I)	(O)	(F)	(F)	(I)	(I)	(O)
	57	58	59	60	61	62	63	64	327	199	199	263	135	359	231	231	295	167
	65	66	67	68	69	70	71	72	328	200	200	264	136	360	232	232	296	168
I	73	74	75	76	77	78	79	80	329	201	201	265	137	361	233	233	297	169
C	81	82	83	84	85	86	87	88	330	202	202	266	138	362	234	234	298	170
M	89	90	91	92	93	94	95	96	331	203	203	267	139	363	235	235	299	171
	97	98	99	100	101	102	103	104	332	204	204	268	140	364	236	236	300	172
N	105	106	107	108	109	110	111	112	333	205	205	269	141	365	237	237	301	173
U	113	114	115	116	117	118	119	120	334	206	206	270	142	366	238	238	302	174
M	121	122	123	124	125	126	127	128	335	207	207	271	143	367	239	239	303	175
B	129	130	131	132	133	134	135	136	336	208	208	272	144	368	240	240	304	176
E	137	138	139	140	141	142	143	144	337	209	209	273	145	369	241	241	305	177
R	145	146	147	148	149	150	151	152	338	210	210	274	146	370	242	242	306	178
	153	154	155	156	157	158	159	160	339	211	211	275	147	371	243	243	307	179
	161	162	163	164	165	166	167	168	340	212	212	276	148	372	244	244	308	180
	169	170	171	172	173	174	175	176	341	213	213	277	149	373	245	245	309	181
	177	178	179	180	181	182	183	184	342	214	214	278	150	374	246	246	310	182
	185	186	187	188	189	190	191	192	343	215	215	279	151	375	247	247	311	183
	193	194	195	196	197	198	199	200	344	216	216	280	152	376	248	248	312	184
	201	202	203	204	205	206	207	208	345	217	217	281	153	377	249	249	313	185
	209	210	211	212	213	214	215	216	346	218	218	282	154	378	250	250	314	186
	217	218	219	220	221	222	223	224	347	219	219	283	155	379	251	251	315	187
	225	226	227	228	229	230	231	232	348	220	220	284	156	380	252	252	316	188
	233	234	235	236	237	238	239	240	349	221	221	285	157	381	253	253	317	189
	241	242	243	244	245	246	247	248	350	222	222	286	158	382	254	254	318	190
	249	250	251	252	253	254	255		351	223	223	287	159	383	255	255	319	191

Example:

Determination of the signals, e.g. for the actuator 172 (group 1):

- Search for actuator no. 172 in the left-hand table field
- There are located the byte addresses for BV, RE, RA, QL in the same line of the right table field
- The column heading which is part of the actuator no. represents the bit address

For actuator no. 172, the following applies:

- IL → M 277.3
- CA → M 149.3
- RE → I 85.3

- RA → I 149.3
- LO → O 85.3

Switch sequence assignment by manual group

It is possible to change the sequence assignment by FC calls for all actuators which are assigned to the same manual group.

CALL	GRP_TA_FC	Change sequence assignment
	iTA := 12	New sequence assignment
	IHGrp := 10	For all ICMs with HZUO=10

"Warning by start" function

Since version 4.6 the "Warning by start" function is implemented. In DB701 (PCU_GEN), the setpoint of the warning time and the WarnON bit for each affected ICM in the ICM data set is configured (see above). The FC728 must be called in OB32.

Sequence:

If an ICM with configured "WarnOn" function is started (manually or automatically), M99.0 (request bit) is set. This request triggers the warning signal M99.1. After the warning time has expired, the enable flag M99.2 is set for 10 sec. With the enable flag, the load output of the requesting ICM is enabled too. During the 10 second enable time, all other ICMs with configured "warning by start" function may be started directly without warning signal.

After the enable time (10 seconds) has expired, M99.2 is reset so a new warning signal is necessary on ICM start.

ICMs without configured "warn by start" function continue starting directly.

Enabling ICM groups 3 and 4

In order to use ICM groups 3 and 4, they have to be released in the scheduler. There are 2 possible ways:

- Via the parameter assignment of the scheduler
  ICM group 3 → data set 11, 12, and 13: Parameter Disable = 0
  ICM group 4 → data set 21, 22, and 23: Parameter Disable = 0
- Edit the data records of the scheduler in DB720 with the DB editor

ICM group 3

ICM function	Scheduler DS	Change DB720
RE, RA, BA	11	DBX 121.0 = 0 and DBX 121.1 = 1
ICM execute	12	DBX 131.0 = 0 and DBX 131.1 = 0
QL	13	DBX 141.0 = 0 and DBX 141.1 = 1

ICM group 4

ICM function	Scheduler DS	Change DB720
RE, RA, BA	21	DBX 221.0 = 0 and DBX 221.1 = 1
ICM execute	22	DBX 231.0 = 0 and DBX 231.1 = 0
QL	23	DBX 241.0 = 0 and DBX 241.1 = 1

ICM functions for "Line entity"

- Bit SETM
  If this bit has the value 1, the SetM message will be sent. If the entry in FIFO is successful, the bit will be taken back.
- Bit RESETM
  If this bit has the value 1, the ResetM message will be sent. If the entry in FIFO is successful, the bit will be taken back.
- Bit REQABM
  - If this bit is set and the BSP flag shows 1, the AckABM message (neg) will be sent and the bit reset.
  - If this bit is set and the BSP flag shows 0, the bit ABM will be set and the AckABM (pos) message will be sent and the bit will be reset.
- Bit REQM
  - If this bit is set and the bit ABM is set, an AckM message (pos) will be sent and the bit will be reset; additionally, the M bit will be set in the ICM data record.
  - If this bit is set and the bit ABM is not set, an AckM message (neg) will be sent and the bit will be reset.
- Bit ABM / M
  If one of these bits is set, the CA flag will not be used anymore. The ICM always has 0 at the output.
  Manual operation is also not possible.
- Bit ForceEnaIf this bit fits, the BV flag is not considered in any way. The release is always given.
- Bit SIM
  This bit simulates the acknowledgements of the ICM. For this purpose, the expected feedback is entered in a global DB.
  These simulated feedback messages are then allocated to the input data of the ICM in a new FB.

- Bit ResREQM
  If the bit is set, the AckResM (pos) message will be sent and the bit will be reset; in addition to that, the M bit will be reset in the ICM data record.
- Bit ResREQABM
  - If this bit is set and the bit M is not set, an AckResABM (pos) message will be sent and the bit will be reset; in addition, the ABM bit will be reset in the ICM data record.
  - If this bit is set and the bit M is set, an AckResABM (neg) message will be sent and the bit will be reset.

"Fast ICM" function

The operator has the option to reduce the ICMs by altering some of the

ICMs in cyclic interrupts (OB33, OB34, OB35, OB36)

(note the processing time of the OB and cycle time).

FC505 will be called in OB35/FC2019. This FC with the SFC36 prevents the acknowledgment error with I/O access and calls up FB1222 in which the operator can process the fast ICMs with the FC727 in 100 ms cycles.

It is also possible to call up the FC727 in OB36 (50 ms), OB34 (200 ms) or OB33 (500 ms).

In these OBs you will have to call up the SFC36 prior to the FC727.

The FC727 executes the following tasks:

- It loads the data record.
- RE,RA are loaded directly by the I/O devices.
- QL will be written directly to the I/O devices.
- BA,BV and the manual group are loaded directly.
- The ICM functions will be executed.

Call-up sequence

```
OB 35 ----> FC 2019 ----> FC 505
 CALL "SYS"
 Call SFC 36 (hide acknowledgment error)
 PRGFLT_SET_MASK := DBD160
 ACCFLT_SET_MASK := DBD164
 RET_VAL :=#iRetVal
 PRGFLT_MASKED := DBD168
 ACCFLT_MASKED := DBD172
 Call FB 1222 (user program OB35)
 --------------->
```

```
 CALL FC 727 (call once per 100 ms ICM) iMode := 35 (35=OB35,
36=OB36, 34=OB34, 33=OB33)
 iESG_GR := 3 (ICM group 3)
 iESG_NR := 1 (ICM number 1 in group 3, i.e. ICM 511)
```

In the ICM data record, the counter 100 ms (1-11) sets the entry so that we are dealing with a 100 ms ICM. This entry prevents processing of the ICM times from FB726.

In parameter assignment, the parameter "T100MS" will be automatically increased from 1 – 11.

If this ICM call is removed from FC2019, you will have to switch back the ICM to cycle time in seconds during parameter assignment:

- Set hidden attribute "T100MS" = 0.

In OB35 (100 ms) you can call up 5 ICMs without any problems.

In OB34 (200 ms) you can call up 20 ICMs without any problems.

Call-up sequence

OB 35 ----> FC 2019 ----> FC 505			
	CALL "SYS"		
	Call SFC 36		(hide acknowledgment error)
	PRGFLT_SET_MASK	:= DBD160	
	ACCFLT_SET_MASK	:= DBD164	
	RET_VAL	:=#iRetVal	
	PRGFLT_MASKED	:= DBD168	
	ACCFLT_MASKED	:= DBD172	
	Call FB 1222		(user program OB35)
	---------->		
	CALL FC 727		(call once per 100 ms ICM) iMode := 35 (35=OB35, 36=OB36, 34=OB34, 33=OB33)
	iMode	:= 35 (35=OB35, 36=OB36, 34=OB34, 33=OB33)	
	iESG_GR	:= 3 (ICM group 3)	
	iESG_NR	:= 1 (ICM number 1 in group 3, i.e. ICM 511)	

In the ICM data record, the counter 100 ms (1-11) sets the entry so that we are dealing with a 100 ms ICM. This entry prevents processing of the ICM times from FB726.

In parameter assignment, the parameter "T100MS" will be automatically increased from 1 – 11.

If this ICM call is removed from FC2019, you will have to switch back the ICM to cycle time in seconds during parameter assignment:

Set hidden attribute "T100MS" = 0.

- In OB35 (100 ms) you can call up 5 ICMs without any problems.
- In OB34 (200 ms) you can call up 20 ICMs without any problems.

3.9 FIFO1 to FIFO6 - PCU system data general

The block enables you to determine for each of the two servers which message types of the PCU should be sent to the corresponding server.

- FIFOs 1 to 3 (DB670, 671, 672) are assigned fixed to server 1
- FIFOs 4 to 6 (DB690, 691, 692) are assigned fixed to server 2

Parameterization PCU

FIFOx PCU	DB 670 ...DB 692		Record: 0	
No.	NAME	TYPE Info	Preset	Comment
1	TYPE0	I8 P S	3	Telegram type which FIFO accepts
2	TYPE1	i8 P S	7	Telegram type which FIFO accepts
3	TYPE2	I8 P S	0	Telegram type which FIFO accepts
4	TYPE3	I8 P S	0	Telegram type which FIFO accepts
5	TYPE4	I8 P S	0	Telegram type which FIFO accepts
6	TYPE5	I8 P S	0	Telegram type which FIFO accepts
7	TYPE6	I8 P S	0	Telegram type which FIFO accepts
8	TYPE7	I8 P S	0	Telegram type which FIFO accepts
9	TYPE8	I8 P S	0	Telegram type which FIFO accepts
10	TYPE9	I8 P S	0	Telegram type which FIFO accepts

Message types

Type	Description	Message handler	See manual/chapter
Type 0	Locked		
Type 1	Free protocols (old) (PI5500)		
Type 2	Step protocols (old)	Srprot2.dll	
Type 3	Messages	Prot_003.dll	17_Messages / 1.1 + ff.
Type 4	Recipe order V2	Gr.dll	
Type 5	Procedure report entry time + 20 DFMs	Srprot5.dll	14_Logging / 1.3
Type 6	Free protocol: Received data	Prot_006.dll	14_Logging / 2.2.1
Type 7	Date/time synchronization	Prot_007.dll	02_Inst-Config / 9.1.3

Type	Description	Message handler	See manual/chapter
Type 8	Recipe order V3	Prot_008.dll/recctrl.dll	11_Batch processing / 2.1 ff.
Type 9	Batch order data: Batch start	Cas.dll	11_Batch processing / 2.1 ff.
Type 10	Reserved for system extensions		
Type 11	Reserved for system extensions		
Type 12	Reserved for system extensions		
Type 13	Unit status	Ta.dll	12_Operation and control of batches / 5.2.2
Type 14	Free protocol order	Prot_014.dll	11_Batch processing / 2.9
Type 15	Batch status	Cas.dll	26_Blocks S7 / 2.36
Type 16	"Life/killer" message for redundancy	Recctrl.dll	19_Operation and control of routes / 2.1.1
Type 17	Transaction store	Recctrl.dll	
Type 18	Trigger status change (S7 only)	S7.dll	13_Batch trending / 2.6
Type 19	ICM pipe-entity control	Entity.dll	26_Blocks S7 / 2.7 … end
...	Reserved for system extensions		
Type 30	RCS: Route update	Rcs_port.dll	24_Block library RCS
Type 31	RCS: Element update	Rcs_port.dll	24_Block library RCS
Type 32	RCS: Request dynamic route ID	Rcs_port.dll	24_Block library RCS
Type 33	RCS: Error triggering elements	Rcs_port.dll	24_Block library RCS
Type 34	RCS: General request	Rcs_port.dll	24_Block library RCS
Type 35	RCS: reserved	Rcs_port.dll	
Type 36	RCS: "Life/killer" message for redundancy	Rcs_port.dll	19_Operation and control of routes / 2.1.1
Type 37 to 127	Reserved for system extensions		
Type 128 ... 255	Free for user allocation		

Note

The possible and useful FIFO configurations are described in manual 12_Operation and control of batches.

3.10 GRUP_TA - Group block

Messages of technological objects (ICMs, AIN, PID, etc.) should be referenced to specific batches due to several reasons. This could be achieved by the parameter "SEQU" in the data set.

If an event to notify arises, batch information is examined depending on the value of the parameter "SEQU" as follows:

- Sequence=1..64:
  The parameter value corresponds to the number of the sequence data set from which the recipe type, job number, and batch number will be read. This assignment is selected for objects which are running inside of a sequence control (e.g. control modules, analog inputs/ outputs, controllers of vessels).
- SEQU=101..255:
  A pseudo batch assignment can be defined for objects which are not involved in a step control. Batch information is not taken from a sequence data set but from a GRUP_TA data record. The number of the GRUP_TA record results from the value of parameter "SEQU" - 100
- SEQU = 101 ... 255:GRUP_TA.1 ... 155
  The GRUP_TA data records can be varied by parameterization or at runtime per program.

```
L    SYS.u.byYear;
T    GRP_TA.au[155].bYear;    //Year
L    255;
T    GRP_TA.au[155].bReCType;    //Recipe type
L    254;
T    GRP_TA.au[155].iRecipe;    //Recipe number
L    253;
T    GRP_TA.au[155].iOrder;    //Job number
L    252;
T    GRP_TA.au[155].iBatch;    //Batch number
```

Global data for block GROUP_TA: Parameterization PCU

GRUP_TA PCU		DB723		Sets: max. 155 per PCU
No.	NAME	TYPE	Preset	Comment
1	GRUP_Anz	I16	1	Number of groups
2	DS_Len	I16	8	Data set length

Parameter sets for block GRUP_TA: Parameterization PCU

GRUP_TA PCU		DB723		Sets: max. 155 per PCU
No.	NAME	TYPE	Preset	Comment
1	Jahr	BYTE	61	Year for recipe type, job no., batch no.
2	Rtyp	BYTE	1	Recipe type
3	RezNr	I16	0	Recipe number
4	AuftrNr	I16	0	Job number
5	ChargeNr	I16	0	Batch number

Text parameterization IOS

GRUP_TA IOS			Sets: max. 155 per PCU
No.	Type	Preset	Comment
1	Z16	GRUP_TA xxx	Block name

3.11 HAND - Manual enable block

The actuators and sequence control elements of a system can be divided into up to 64 manual groups per PCU. This division can be made as desired, but is usually made to suit technological requirements.

The assignment of an actuator is fixed by the parameter HZUO of the ICM block, the assignment of a sequence control by the parameter HZUO of the SEQU block.

The manual enables actions which have to be allocated to defined flags in the program USER. (Flag = "1" means "Manual"). The distribution on ICM and SEQU blocks is carried out by the system.

Process interface: Assignment manual group to data bit DB701

Extract of the data structure SYS-ALG General system data:

Bit DBB	7	6	5	4	3	2	1	0	
24	8	7	6	5	4	3	2	1	Manual group
25	16	15	14	13	12	11	10	9	number
26	24	23	22	21	20	19	18	17	
27	32	31	30	29	28	27	26	25	
28	40	39	38	37	36	35	34	33	
29	48	47	56	45	44	43	43	41	
30	56	55	54	53	52	51	50	49	
31	64	63	62	61	60	59	58	57	

HZUO	Meaning for ICM1-2, SEQU
0	No linking of manual signals into the data record
1..64	Manual bit is tracked to the manual group state
>64	Manual bit is always = 1

For HZUO=0 the user has to allocate the manual signal.

- For ICM1 / 2
  - Per program
    = ICM1.au[123].boHD;
  - Per bit operation in the process display
- Sequence:
  - Per program
    = TA.au[12].boHAND;

Application plant overview, menu item functions -> Manual (Ctrl-F5) Auto relatively (Ctrl-F6)

User interface: Assignment manual group to flag

No. = Manual group no.

No.	Flag	No.	Flag	No.	Flag	No.	Flag
1	M 712.0	17	M 714.0	33	M 716.0	49	M 718.0
2	M 712.1	18	M 714.1	34	M 716.1	50	M 718.1
3	M 712.2	19	M 714.2	35	M 716.2	51	M 718.2
4	M 712.3	20	M 714.3	36	M 716.3	52	M 718.3
5	M 712.4	21	M 714.4	37	M 716.4	53	M 718.4
6	M 712.5	22	M 714.5	38	M 716.5	54	M 718.5
7	M 712.6	23	M 714.6	39	M 716.6	55	M 718.6
8	M 712.7	24	M 714.7	40	M 716.7	56	M 718.7
9	M 713.0	25	M 715.0	41	M 717.0	57	M 719.0
10	M 713.1	26	M 715.1	42	M 717.1	58	M 719.1
11	M 713.2	27	M 715.2	43	M 717.2	59	M 719.2
12	M 713.3	28	M 715.3	44	M 717.3	60	M 719.3
13	M 713.4	29	M 715.4	45	M 717.4	61	M 719.4
14	M 713.5	30	M 715.5	46	M 717.5	62	M 719.5
15	M 713.6	31	M 715.6	47	M 717.6	63	M 719.6
16	M 713.7	32	M 715.7	48	M 717.7	64	M 719.7

3.12 INCO - Increment transformer

This function block is for the calculation of actuation increments and the conversion to opening or closing impulses of the required length for up to 16 motorized actuators.

Each opening or closing impulse influences a time step and has to be linked by the user in the program USER to digital outputs.

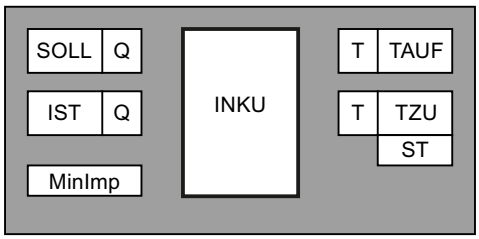

The block is interconnected with the setpoint (SOLL) and the actuator response value (IST). The response time (ST) in seconds of the drive is stored in the parameter set. On the basis of the setpoint, actual value, and response time, INCO calculates the required setpoints for the time steps.

T = ST * (SOLL - IST) / 10 (time setpoint in 0.1 s)

If the calculated T is greater than the parameterized minimum pulse width, depending on the actuation direction, one of the two time steps is started and the other one is canceled.

Parameter set: Parameterization PCU, text parameterization IOS
Assignment: Time step - INCO and example of allocation program

Global data for block INCO: Parameterization PCU

INCO PCU		DB729		Sets: max. 16 per PCU
No.	NAME	TYPE	Preset	Comment
1	INKUAnz	I16	1	INCO count
2	DS_Len	I16	20	Data set length
3*	Offset	I16	300	Offset to 1st data record
4*	MaxDS	I16	16	Maximum DS count
5*	OffsRun	I16	100	Offset to runtime copy

* hidden attributes

Parameter sets for block INCO: Parameterization PCU

INCO PCU		DB 729		Sets: max. 16 per PCU
No.	NAME	TYPE	Preset	Comment
1	SOLL	Quell	8000 Hex	Position setpoint
2	IST	Quell	8000 Hex	Position actual value
3*	ST_H	I16	0	Response time in seconds high
4	ST	I16	0	Response time in seconds
5*	MinImp_H	I16	0	Min. pulse width in 1/10 sec. high
6	MinIMP	I16	0	Min. pulse width in 1/10 sec.
7*	SpSt_H	I16	0	Memory manipulated variable high
8*	SpSt	I16	0	Memory manipulated variable

* hidden attributes

Text parameterization IOS

INCO IOS			Sets: max. 16 per PCU
No.	**Type**	**Preset**	**Comment**
1	Z16	INCO xxx	Block name

Assignment time step - INCO block

No.	"Open"	"Closed"	No.	"Open"	"Closed"
1	T96	T97	9	T112	T113
2	T98	T99	10	T114	T115
3	T100	T101	11	T116	T117
4	T102	T103	12	T118	T119
5	T104	T105	13	T120	T121
6	T106	T107	14	T122	T123
7	T108	T109	15	T124	T125
8	T110	T111	16	T126	T127

Example:

Allocation program time step to outputs

	T96	Time step for INCO 01 "open"
=	Q xx.x	Output for INCO 01 "open"
A	T97	Time step for INCO 01 "closed"
=	Q yy.y	Output for INCO 01 "closed"

3.13 CURVSCAN - Curve target values

The system provides the possibility to represent any setpoint course as a curve in a graph. The coordinates are held in a data block. A maximum of 64 curves per PCU may be running at a time.

This block always calculates the current setpoint depending on the time basis. This "SP_Val" setpoint can be interconnected for further processing, e.g. to a PID controller.

The bit "Enable Cmd" must be parameterized in the data set of the curve. The curve is running only if it is enabled. If "EnableCmd=0", sampling of the curve is stopped (e.g. in the event of a fault in the sequence)

There are two options for the initiation of the curve sampling:

Start mode	Description
Internal:	This means that the curve is initiated manually. To do this, the curve group number and the relative curve number in the group must be entered in the data set. The curve is then started by the start bit "Start from intern=1" in the data set. This start bit is reset automatically after the curve has finished. The curve can only be started manually if the source parameterized in the curve data record does not specify a curve number.
External:	This means that the curve is initiated via a sequence. In this case, the curve number is entered as a decimal number with two places after the point in a linkable block e.g. a setpoint in a DFM. This block is configured as a source in the curves data record Place before the decimal point: Curve group number Place after the decimal point: Relative curve group number in the group After the curve is started, setpoint SW = 0 must be entered in the recipe list, as otherwise the curve would be restarted after the first run. As long as the curve number is set, it is started repeatedly. If the specified DFM curve number changes while the curve is in progress, the existing curve is terminated and the curve with the new number is started instead.

Global data for block CURVSCAN - PCU parameter assignment

CURVSCAN PCU		DB747		Sets: max. 64 per PCU
No.	NAME	TYPE	Preset	Comment
1	No.	I16	50	Block number for the first curve group
2	KURVANZ	I16	1	Number of curves
3	DS_Len	I16	50	Data set length
4*	Offset	I16	300	Offset to 1st data record
5*	MaxDS	I16	64	Maximum DS count
6*	OffsRaun	I16	100	Offset to runtime copy

* hidden attributes

Parameter sets for block CURVSCAN: Parameterization PCU

CURVSCAN PCU		DB 747		Sets: max. 64 per PCU
No.	NAME	TYPE	Preset	Comment
1	CrvGrp	I16	1	Current curve group number
2	Crv	I16	1	Current relative curve number in the group
3	ExtPtr	Quell	8000 Hex	External start: Source for curve number
4*	ExtCrvGrp	I8	1	External curve group
5*	ExtCrv	I8	1	External curve number
6*	Start	B1	0	Start

CURVSCAN PCU		DB 747		Sets: max. 64 per PCU
7*	Active	B1	0	Curve running
8*	ExtStart	B1	0	External start
9*	IntStart	B1	0	Internal start
10*	NewCoord	B1	0	New coordinates
11*	CurvEnd	B1	0	Curve end
12*	NoSyncMore	B1	0	No synchronization point anymore
13	TimeVal	I16	0	Actual time value
14	SP_Val	I16	0	Actual setpoint
15	SyncVal	I16	0	Actual sync value
16	TimeBase	I16	6	Time base in sec.
17	TimeCnt	I16	0	Time counter value
18	EnableCmd	Step	U M 108.1	Step 7 query command for enabling the curve
19	Enable	B1	0	Enabled
20	lastTimeVal	I16	0	Last time value from table
21	lastSP_Val	I16	0	Last support value from table
22	nextTimeVal	I16	0	Next time value from table
23	nextSP_Val	I16	0	Next support value from table
24	nextSyncTime	I16	0	Next time value for synchronization
25	nextSyncVal	I16	0	Next synchronization point from table
26	CoordNoVal	I16	0	Number of next support value pair
27	CoordNoNextSync	I16	0	Support point number of next sync. point
28	ErrorCode	I16	0	Error number: 1 error in linkage of the clearance 2 curve not enabled 3 no curve number prescribed 4 external group number <=0 5 external curve number <=0 6 internal group number <=0 7 internal curve number <=0 8 curve DB not available 9 curve number > curve count in DB

* hidden attributes

Text parameterization IOS

CURVSCAN IOS			Sets: max. 64 per PCU
No.	Type	Preset	Comment
1	Z16	CURVSCANxxx	Block name

Curve group parameterization IOS

In order to specify setpoint curves at the IOS, the data blocks in which the points of the curve are to be stored must be entered in the file "WINDCS\SYS\KURVEIN.INI" Section [DB_List].

If more than one data block is required, the next block proceeding from the first one must always be used.

Each group number is stored in one data block.

The number of the first data block for the points of the curves must also be entered in the data set of the block CURVSCAN.

KURVEIN.INI	Description
[DB_List]	List of the data blocks
GROUPx=PCU,DB,Type	Group no. = PCU no., DB no., Data type*
GROUPx=PCU,DB,Type	Group no. = PCU no., DB no., Data type*
Etc.	
	* data type: short = 16-bit number, long = 32-bit number

Note

The data type "long" is not implemented in the standard system.

Example:

The points of the setpoint curves of the PCU-1 are to be stored in the DB 50 for group 1 and DB 51 for group 2 as 16-bit numbers.

KURVEIN.INI	Description
[DB_List]	
GROUP1=1,DB50,short	Group no.1 = PCU no. 1, DB no. 50, Data type short=16-bit number
GROUP2=1,DB51,short	Group no.2 = PCU no. 1, DB no. 51, Data type short=16-bit number

After the data blocks have been determined, the curves can be created with the curve entry application.
The creation of curves is described in the 'Curve entry' chapter of the user manual.

Synchronization points

If any action is to be made dependent on a synchronization value which can be entered in the setpoint curve,

the block FC647 must be called. This block must be informed (as formal operands) of the curve number, the synchronization value to be queried as well as the recipe system. The block may be called in the basic operation or in the user section of OB1 or OB 35.
On block FC 647, the data record of the curve ("iCurveRecord") for which the synchronization values are to be checked is assigned. Besides the value of the synchronization point ("iSyncValue") is handed over.

The function FC 647 returns the value "iRetVal" as a result. If this value equals zero, no error occurred in the function. The transferred RLO of the function determines whether the synchronization point is reached.
If RLO=1, the curve has reached the synchronization point. This result can, for example: be allocated to a flag and/or used for the next step condition of a basic operation.

The value range for the synchronization points amounts to Zsyn = 2 ... 32767.

Values 0 and 1 are occupied by the system and can be queried by the user:

- Zsyn = 0 --> curve not running
- Zsyn = 1 --> curve running and the first synchronization point not yet reached.

Example

Call up of the FC647 in a basic operation GOP 44 (FC1044), in which the curve 8 is to be sampled for the synchronization value Zsyn = 12. The RLO of FC 647 is assigned to flag M23.4 and can be used, for example, in the next step conditions.

```
 FC 1044
CALL FC 647                          Processing of synchronization points
 iCurveRecord        :=8             Curve group number
 iSyncValue          :=12            Synchronization value
 iRetVal             = MW 40         = 0, function has been executed without errors.
= M 23.4                             RLO of M 23.4 = 1, when the synchronization value is
                                     reached
```

Canceling a running curve

The curve can be stopped and enabled by the parameter "EnableCmd". However, it is not possible to reset and restart the curve. The setpoint curve has to be run down before restarting is possible.

As aborting and restart of a sequence cannot often wait until the curve has run down, it has to be killed in the following way:

The parameter "CurvEnd" in the parameter set of CURVSCAN has to be set.

The system resets these bits.

If the abort bit is set and the assigned curve is not active, the next curve start is aborted!

3.14 MAINT_ICM - Maintenance data

Switch alterations and operating hours are seized for every ICM 1023 interrupt lines are available.

with a maximum of 5 target values each. The overflow of these values may be output as messages which have to be acknowledged after maintenance has happened. Additional notes

on configuration and projecting are found in the manual "16_Application based on S7.pdf / Maintenance data chapter"

Maint_ICM manages the actual values of the switch alternations and operating hours counters as well as acknowledgements at the overflow of the parameterized target values.

Global data for block MAINT_ICM: Parameterization PCU

MAINT_ICM PCU		DB 682		Sets: max. 1023 per PCU
No.	NAME	TYPE	Preset	Comment
1	MAINT_Anz	I16	1	Maint count
2*	DS_Len	I16	14	Data set length
3*	Offset	I16	10	Offset to 1st data record
4*	MaxDS	I16	511	Maximum DS count

* hidden attributes

Parameter sets for block MAINT_ICM: Parameterization PCU

MAINT_ICM PCU		DB 682		Sets: max. 1023 per PCU
No.	NAME	TYPE	Preset	Comment
1*	STAT	I16	0	Ackn. status
2	SSp_SW1_OK	B1	0	Switch cycle - maintenance job target value 1 done
3	SSp_SW2_OK	B1	0	Switch cycle - maintenance job target value 2 done
4	SSp_SW3_OK	B1	0	Switch cycle - maintenance job target value 3 done
5	SSp_SW4_OK	B1	0	Switch cycle - maintenance job target value 4 done
6	SSp_SW5_OK	B1	0	Switch cycle - maintenance job target value 5 done
7	Std_SW1_OK	B1	0	Hours - maintenance job target value 1 done
8	Std_SW2_OK	B1	0	Hours - maintenance job target value 2 done
9	Std_SW3_OK	B1	0	Hours - maintenance job target value 3 done
10	Std_SW4_OK	B1	0	Hours - maintenance job target value 4 done
11	Std_SW5_OK	B1	0	Hours - maintenance job target value 5 done
12	SSp_Wert_H	I16	0	Switch value high
13	SSP_Wert_L	I16	0	Switch value low
14	SSp_WERT	I32	0	Switch value
15	STD_Wert_H	I16	0	Hours value high
16	STD_Wert_L	I16	0	Hours value low
17	Std_WERT	I32	0	Hours value double integer
18*	Start time	I32	0	On time double integer

* hidden attributes

Text parameterization IOS

MAINTICM IOS			Sets: max. 1023 per PCU
No.	Type	Preset	Comment
1	Z16	MaintICM xxx	Block name

3.15 MAINT_USR - Maintenance data user

The switch alternations and operating hours for user aggregates can be recorded with this function. 1023 interrupt lines are available.

For this in each case a maximum of 5 target values can be entered. Exceeding these target values is output as messages which have to be acknowledged after maintenance has happened.

Maint_USR manages the actual values of the switch alternations and operating hours counters as well as acknowledgements at the overflow of the parameterized target values.

Global data for block MAINT_USR: Parameterization PCU

MAINT_USR PCU		DB 684		Sets: max. 1023 per PCU
No.	NAME	TYPE	Preset	Comment
1	MAINT_Anz	I16	1	Maint count
2*	DS_Len	I16	14	Data set length
3*	Offset	I16	10	Offset to 1st data record
4*	MaxDS	I16	511	Maximum DS count

* hidden attributes

Parameter sets for block MAINT_USR: Parameterization PCU

MAINT_USR PCU		DB 684		Sets: max. 1023 per PCU
No.	NAME	TYPE	Preset	Comment
1	SSp_SW1_OK	B1	0	Switch cycle - maintenance job target value 1 done
2	SSp_SW2_OK	B1	0	Switch cycle - maintenance job target value 2 done
3	SSp_SW3_OK	B1	0	Switch cycle - maintenance job target value 3 done
4	SSp_SW4_OK	B1	0	Switch cycle - maintenance job target value 4 done
5	SSp_SW5_OK	B1	0	Switch cycle - maintenance job target value 5 done
6	Std_SW1_OK	B1	0	Hours - maintenance job target value 1 done
7	Std_SW2_OK	B1	0	Hours - maintenance job target value 2 done

MAINT_USR PCU		DB 684		Sets: max. 1023 per PCU
8	Std_SW3_OK	B1	0	Hours - maintenance job target value 3 done
9	Std_SW4_OK	B1	0	Hours - maintenance job target value 4 done
10	Std_SW5_OK	B1	0	Hours - maintenance job target value 5 done
11	SSp_Wert_H	I16	0	Switch value high
12	SSP_Wert_L	I16	0	Switch value low
13	SSp_WERT	I32	0	Switch value double integer
14	Std_Wert_H	I16	0	Hours value high
15	Std_Wert_L	I16	0	Hours value low
16	Std_WERT	I32	0	Hours value double integer
17*	Start time	I32	0	On time double integer

* hidden attributes

Text parameterization IOS

MAINTUSR IOS			Sets: max. 1023 per PCU
No.	Type	Preset	Comment
1	Z16	MaintUSR xxx	Block name

3.16 MVC - Measured Value Control

The MVC block controls up to 128 analog values for limit violations.

The measured value to be checked (XIST) is taken from another block (AIN, MULT, PID, POLY, SEQU) by interconnection.

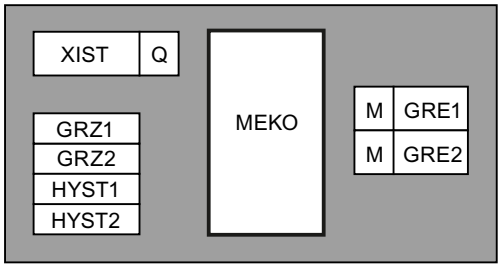

For each measured value, 2 limits are monitored (GRZ1, GRZ2), taking into account a hysteresis band (HYST1,HYST2) common to both limits. The hysteresis band can be either above or below the limit in question.

MVC sets or deletes the appropriate event bits (GRE1, GRE2) for the relevant analog value.

A parameter set is assigned to each measured value to be checked.

Parameter set:	Parameterization MVC PCU text parameterization MVC IOS
User interface:	Event bit assignment - MVC

Global data for block MVC: Parameterization PCU

MVC PCU		DB728		Sets: max. 128 per PCU
No.	NAME	TYPE	Preset	Comment
1	Meko_Anz	I16	1	MVC count
2	DS_Len	I16	16	Data set length
3*	Offset	I16	300	Offset to 1st data record
4*	MaxDS	I16	128	Maximum DS count
5*	OffsRun	I16	100	Offset to runtime copy

* hidden attributes

Parameter sets for block MVC: Parameterization PCU

MVC PCU		DB728		Sets: max. 128 per PCU
No.	NAME	TYPE	Preset	Comment
1	GRZ1	I16	0	Limit 1
2	HYST1	I16	0	Hysteresis limit value 1
3	HYS1	B1	0	Hysteresis range 1: 0/1 = low/high
4	GRZ2	I16	0	Limit 2
5	HYST2	I16	0	Hysteresis limit value 2
6	HYS2	B1	0	Hysteresis range 2: 0/1 = low/high
7	XIST	Quell	8000 Hex	Address of the actual value
8*	SEQU	I8	0	Assigned sequence
9	GRE1	B1	0	Violation limit 1: 0/1 = No/Yes
10	GRE2	B1	0	Violation limit 2: 0/1 = No/Yes
11	X	I16	0	Actual value

* hidden attributes

Parameter set: Text parameterization IOS

MVC IOS			Sets: max. 128 per PCU
No.	Type	Preset	Comment
1	Z16	MVC xxx	Block name

User interface to MVC block

Event bit assignment - MVC 1..64

No.	GRE1	GRE2		No.	GRE1	GRE2
1	M 856.0	M 872.0		33	M 860.0	M 876.0
2	M 856.1	M 872.1		34	M 860.1	M 876.1

3	M 856.2	M 872.2		35	M 860.2	M 876.2
4	M 856.3	M 872.3		36	M 860.3	M 876.3
5	M 856.4	M 872.4		37	M 860.4	M 876.4
6	M 856.5	M 872.5		38	M 860.5	M 876.5
7	M 856.6	M 872.6		39	M 860.6	M 876.6
8	M 856.7	M 872.7		40	M 860.7	M 876.7
9	M 857.0	M 873.0		41	M 861.0	M 877.0
10	M 857.1	M 873.1		42	M 861.1	M 877.1
11	M 857.2	M 873.2		43	M 861.2	M 877.2
12	M 857.3	M 873.3		44	M 861.3	M 877.3
13	M 857.4	M 873.4		45	M 861.4	M 877.4
14	M 857.5	M 873.5		46	M 861.5	M 877.5
15	M 857.6	M 873.6		47	M 861.6	M 877.6
16	M 857.7	M 873.7		48	M 861.7	M 877.7
17	M 858.0	M 874.0		49	M 862.0	M 878.0
18	M 858.1	M 874.1		50	M 862.1	M 878.1
19	M 858.2	M 874.2		51	M 862.2	M 878.2
20	M 858.3	M 874.3		52	M 862.3	M 878.3
21	M 858.4	M 874.4		53	M 862.4	M 878.4
22	M 858.5	M 874.5		54	M 862.5	M 878.5
23	M 858.6	M 874.6		55	M 862.6	M 878.6
24	M 858.7	M 874.7		56	M 862.7	M 878.7
25	M 859.0	M 875.0		57	M 863.0	M 879.0
26	M 859.1	M 875.1		58	M 863.1	M 879.1
27	M 859.2	M 875.2		59	M 863.2	M 879.2
28	M 859.3	M 875.3		60	M 863.3	M 879.3
29	M 859.4	M 875.4		61	M 863.4	M 879.4
30	M 859.5	M 875.5		62	M 863.5	M 879.5
31	M 859.6	M 875.6		63	M 863.6	M 879.6
32	M 859.7	M 875.7		64	M 863.7	M 879.7

Event bit assignment - MVC 65..128

No.	GRE1	GRE2		No.	GRE1	GRE2
65	M 864.0	M 880.0		97	M 868.0	M 884.0
66	M 864.1	M 880.1		98	M 868.1	M 884.1
67	M 864.2	M 880.2		99	M 868.2	M 884.2
68	M 864.3	M 880.3		100	M 868.3	M 884.3
69	M 864.4	M 880.4		101	M 868.4	M 884.4
70	M 864.5	M 880.5		102	M 868.5	M 884.5
71	M 864.6	M 880.6		103	M 868.6	M 884.6
72	M 864.7	M 880.7		104	M 868.7	M 884.7
73	M 865.0	M 881.0		105	M 869.0	M 885.0
74	M 865.1	M 881.1		106	M 869.1	M 885.1

75	M 865.2	M 881.2		107	M 869.2	M 885.2
76	M 865.3	M 881.3		108	M 869.3	M 885.3
77	M 865.4	M 881.4		109	M 869.4	M 885.4
78	M 865.5	M 881.5		110	M 869.5	M 885.5
79	M 865.6	M 881.6		111	M 869.6	M 885.6
80	M 865.7	M 881.7		112	M 869.7	M 885.7
81	M 866.0	M 882.0		113	M 870.0	M 886.0
82	M 866.1	M 882.1		114	M 870.1	M 886.1
83	M 866.2	M 882.2		115	M 870.2	M 886.2
84	M 866.3	M 882.3		116	M 870.3	M 886.3
85	M 866.4	M 882.4		117	M 870.4	M 886.4
86	M 866.5	M 882.5		118	M 870.5	M 886.5
87	M 866.6	M 882.6		119	M 870.6	M 886.6
88	M 866.7	M 882.7		120	M 870.7	M 886.7
89	M 867.0	M 883.0		121	M 871.0	M 887.0
90	M 867.1	M 883.1		122	M 871.1	M 887.1
91	M 867.2	M 883.2		123	M 871.2	M 887.2
92	M 867.3	M 883.3		124	M 871.3	M 887.3
93	M 867.4	M 883.4		125	M 871.4	M 887.4
94	M 867.5	M 883.5		126	M 871.5	M 887.5
95	M 867.6	M 883.6		127	M 871.6	M 887.6
96	M 867.7	M 883.7		128	M 871.7	M 887.7

Hysteresis bands

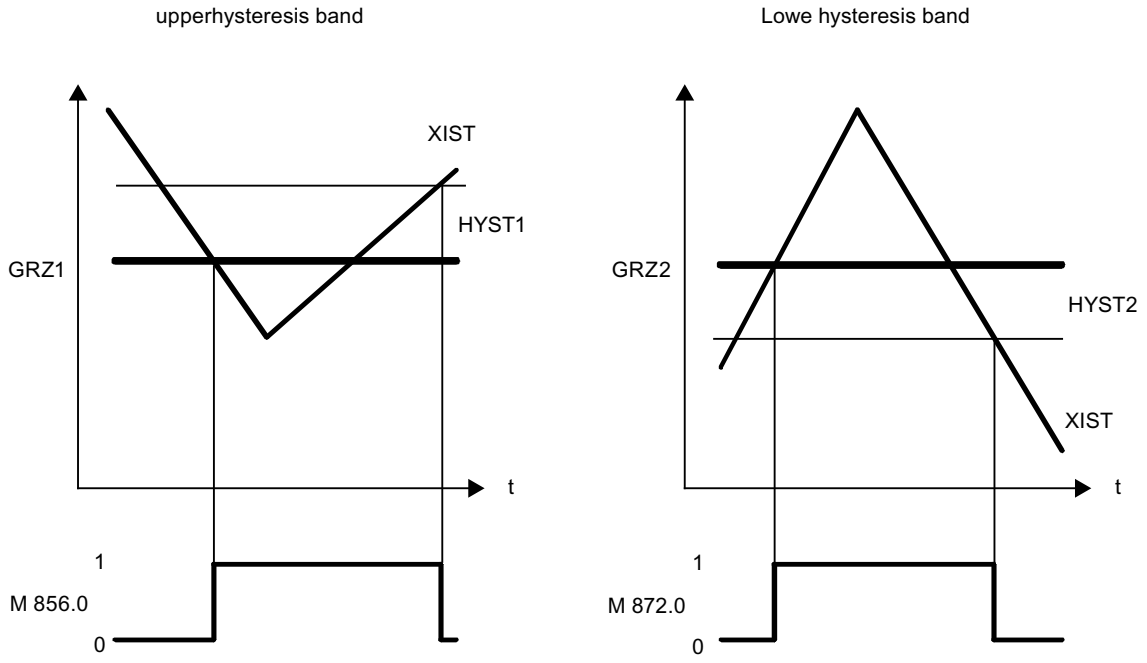

3.17 MSG - Message block

Basics

The MSG block manages a maximum of 1024 system-specific messages and transfers them when they are enabled to those IOSes released for the messages (see parameterization component FIFO, telegram type 3). These messages are displayed in the PCU server application window and entered into the message archive.

The message block allows the following message definitions:

EnableW/Op	S/BM	Message type	Description
0	0	M	Operation message
0	1	F	Fault
1	0	B	Operator message
1	1	W	Warning

For additional information on configuring messages, please refer to the manual "17_Messages.pdf"

If the message is configured as a "fault event" (S/BM = 1), the group flag HUP (M 99.7) is set.

Message output is initiated by a signal change at the trigger flags:

- M 888.0 - M 951.7 for messages 1 to 512
- M 1016.0 - M1079.7 for messages 513 to 1024

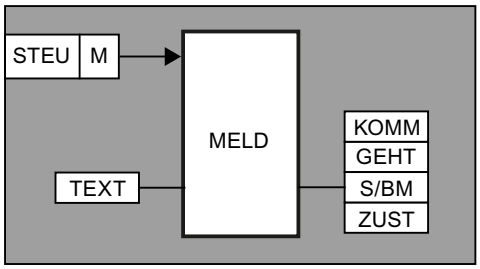

Message structure:

HH.MM.SS X Product 1234 001 MSG 012 aaa ... aaa

Parameter set:	Parameterization MSG PCU, text parameterization MSG IOS
Process interface:	Assignment of message block to data bit
User interface:	Assignment of message block to flag bit
Interface:	Interface to MSG

Global data for block MSG: Parameterization PCU

MSG PCU		DB733		Sets: max. 1024 per PCU
No.	NAME	TYPE	Preset	Comment
1	INKUAnz	I16	1	INCO count
2	DS_Len	Byte	2	Data set length
3*	Offset	I16	300	Offset to 1st data record
4*	MaxDS	I16	1024	Maximum DS count
5*	OffsRun	I16	100	Offset to runtime copy

* hidden attributes

Parameter sets for block MSG: Parameterization PCU

MSG PCU		DB733		Sets: max. 1024 per PCU
No.	NAME	TYPE	Preset	Comment
1	SEQU	I8	0	Assigned sequence
2	KOMM	B1	0	Release incoming message: 0/1 = No/Yes
3	GEHT	B1	0	Release outgoing message: 0/1 = No/Yes
4	S/BM	B1	0	0/1 = operation/fault message
5	FrgHupe	B1	0	Enable hup
6	ZUST	B1	0	Message status
7	EnableW/Op	B1	0	0/1

Example:

Connection of input I3.7 to message 1 (= M 888.0)

A	I3.7	Alarm signal for message
=	M 888.0	Trigger flag

Example:

Connection of input I4.1 to message 1024

A	I4.1	Alarm signal for message
=	M 1079.7	Trigger flag

Parameter set: Text parameterization IOS

MSG IOS			Sets: max. 1024 per PCU
No.	Type	Preset	Comment
1	Z16	MSG 2	Name of the message block

MELDKOM IOS			Sets: max. 1024 per PCU
No.	Type	Preset	Comment
1	Z48	MESSAGE 01 INCOMING	Message text for incoming message

MELDGEH IOS			Sets: max. 1024 per PCU
No.	Type	Preset	Comment
1	Z48	MESSAGE 01 OUTGOING	Message text for outgoing message

For each message, 48 characters of configurable text are displayed for incoming and outgoing messages. The message texts are parameterized in the PCU-specific text lexicons MELDGEH and MELDKOM through the text parameterization. Each message can be parameterized as a fault or operation message by means of the parameter bit S/BM. Issuing incoming and outgoing messages: Each message direction can be released (= 1) or blocked (= 0) with the assigned parameter bit INCOMING and OUTGOING.

For each fault message, the Hup trigger may be enabled or disabled by configuration bit FrgHupe.

Process interface to MSG block

Assignment of message block to data bit

DB615 MSG_M

DBB10	MSG 8 - 1
DBB11	MSG 16 - 9
...	...
DBB137	MSG 1024 - 1017

User interface to MSG block

MSG flag assignment (1-256): M 888.0 ...

No.	Flag	No.	Flag	No.	Flag	No.	Flag
1	M 888.0	65	M 896.0	129	M 904.0	193	M 912.0
2	M 888.1	66	M 896.1	130	M 904.1	194	M 912.1
3	M 888.2	67	M 896.2	131	M 904.2	195	M 912.2
4	M 888.3	68	M 896.3	132	M 904.3	196	M 912.3
5	M 888.4	69	M 896.4	133	M 904.4	197	M 912.4
6	M 888.5	70	M 896.5	134	M 904.5	198	M 912.5
7	M 888.6	71	M 896.6	135	M 904.6	199	M 912.6
8	M 888.7	72	M 896.7	136	M 904.7	200	M 912.7
9	M 889.0	73	M 897.0	137	M 905.0	210	M 913.0
10	M 889.1	74	M 897.1	138	M 905.1	202	M 913.1
11	M 889.2	75	M 897.2	139	M 905.2	203	M 913.2
12	M 889.3	76	M 897.3	140	M 905.3	204	M 913.3

No.	Flag	No.	Flag	No.	Flag	No.	Flag
13	M 889.4	77	M 897.4	141	M 905.4	205	M 913.4
14	M 889.5	78	M 897.5	142	M 905.5	206	M 913.5
15	M 889.6	79	M 897.6	143	M 905.6	207	M 913.6
16	M 889.7	80	M 897.7	144	M 905.7	208	M 913.7
17	M 890.0	81	M 898.0	145	M 906.0	209	M 914.0
18	M 890.1	82	M 898.1	146	M 906.1	210	M 914.1
19	M 890.2	83	M 898.2	147	M 906.2	211	M 914.2
20	M 890.3	84	M 898.3	148	M 906.3	212	M 914.3
21	M 890.4	85	M 898.4	149	M 906.4	213	M 914.4
22	M 890.5	86	M 898.5	150	M 906.5	214	M 914.5
23	M 890.6	87	M 898.6	151	M 906.6	215	M 914.6
24	M 890.7	88	M 898.7	152	M 906.7	216	M 914.7
25	M 891.0	89	M 899.0	153	M 907.0	217	M 915.0
26	M 891.1	90	M 899.1	154	M 907.1	218	M 915.1
27	M 891.2	91	M 899.2	155	M 907.2	219	M 915.2
28	M 891.3	92	M 899.3	156	M 907.3	220	M 915.3
29	M 891.4	93	M 899.4	157	M 907.4	221	M 915.4
30	M 891.5	94	M 899.5	158	M 907.5	222	M 915.5
31	M 891.6	95	M 899.6	149	M 907.6	223	M 915.6
32	M 891.7	96	M 899.7	160	M 907.7	224	M 915.7
33	M 892.0	97	M 900.0	161	M 908.0	225	M 916.0
34	M 892.1	98	M 900.1	162	M 908.1	226	M 916.1
35	M 892.2	99	M 900.2	163	M 908.2	227	M 916.2
36	M 892.3	100	M 900.3	164	M 908.3	228	M 916.3
37	M 892.4	101	M 900.4	165	M 908.4	229	M 916.4
38	M 892.5	102	M 900.5	166	M 908.5	230	M 916.5
39	M 892.6	103	M 900.6	167	M 908.6	231	M 916.6
40	M 892.7	104	M 900.7	168	M 908.7	232	M 916.7
41	M 893.0	105	M 901.0	169	M 909.0	233	M 917.0
42	M 893.1	106	M 901.1	170	M 909.1	234	M 917.1
43	M 893.2	107	M 901.2	171	M 909.2	235	M 917.2
44	M 893.3	108	M 901.3	172	M 909.3	236	M 917.3
45	M 893.4	109	M 901.4	173	M 909.4	237	M 917.4
46	M 893.5	110	M 901.5	174	M 909.5	238	M 917.5
47	M 893.6	111	M 901.6	175	M 909.6	239	M 917.6
48	M 893.7	112	M 901.7	176	M 909.7	240	M 917.7
49	M 894.0	113	M 902.0	177	M 910.0	241	M 918.0
50	M 894.1	114	M 902.1	178	M 910.1	242	M 918.1
51	M 894.2	115	M 902.2	179	M 910.2	243	M 918.2
52	M 894.3	116	M 902.3	180	M 910.3	244	M 918.3
53	M 894.4	117	M 902.4	181	M 910.4	245	M 918.4
54	M 894.5	118	M 902.5	182	M 910.5	246	M 918.5
55	M 894.6	119	M 902.6	183	M 910.6	247	M 918.6

No.	Flag	No.	Flag	No.	Flag	No.	Flag
56	M 894.7	120	M 902.7	184	M 910.7	248	M 918.7
57	M 895.0	121	M 903.0	185	M 911.0	249	M 919.0
58	M 895.1	122	M 903.1	186	M 911.1	250	M 919.1
59	M 895.2	123	M 903.2	187	M 911.2	251	M 919.2
60	M 895.3	124	M 903.3	188	M 911.3	252	M 919.3
61	M 895.4	125	M 903.4	189	M 911.4	253	M 919.4
62	M 895.5	126	M 903.5	190	M 911.5	254	M 919.5
63	M 895.6	127	M 903.6	191	M 911.6	255	M 919.6
64	M 895.7	128	M 903.7	192	M 911.7	256	M 919.7

MSG flag assignment (257-512): M 920.0 ...

No.	Flag	No.	Flag	No.	Flag	No.	Flag
257	M 920.0	321	M 928.0	385	M 936.0	449	M 944.0
258	M 920.1	322	M 928.1	386	M 936.1	450	M 944.1
259	M 920.2	323	M 928.2	387	M 936.2	451	M 944.2
260	M 920.3	324	M 928.3	388	M 936.3	452	M 944.3
261	M 920.4	325	M 928.4	389	M 936.4	453	M 944.4
262	M 920.5	326	M 928.5	390	M 936.5	454	M 944.5
263	M 920.6	327	M 928.6	391	M 936.6	455	M 944.6
264	M 920.7	328	M 928.7	392	M 936.7	456	M 944.7
265	M 921.0	329	M 929.0	393	M 937.0	457	M 945.0
266	M 921.1	330	M 929.1	394	M 937.1	458	M 945.1
267	M 921.2	331	M 929.2	395	M 937.2	459	M 945.2
268	M 921.3	332	M 929.3	396	M 937.3	460	M 945.3
269	M 921.4	333	M 929.4	397	M 937.4	461	M 945.4
270	M 921.5	334	M 929.5	398	M 937.5	462	M 945.5
271	M 921.6	335	M 929.6	399	M 937.6	463	M 945.6
272	M 921.7	336	M 929.7	400	M 937.7	464	M 945.7
273	M 922.0	337	M 930.0	401	M 938.0	465	M 946.0
274	M 922.1	338	M 930.1	402	M 938.1	466	M 946.1
275	M 922.2	339	M 930.2	403	M 938.2	467	M 946.2
276	M 922.3	340	M 930.3	404	M 938.3	468	M 946.3
277	M 922.4	341	M 930.4	405	M 938.4	469	M 946.4
278	M 922.5	342	M 930.5	406	M 938.5	470	M 946.5
279	M 922.6	343	M 930.6	407	M 938.6	471	M 946.6
280	M 922.7	344	M 930.7	408	M 938.7	472	M 946.7
281	M 923.0	345	M 931.0	409	M 939.0	473	M 947.0
282	M 923.1	346	M 931.1	410	M 939.1	474	M 947.1
283	M 923.2	347	M 931.2	411	M 939.2	475	M 947.2
284	M 923.3	348	M 931.3	412	M 939.3	476	M 947.3
285	M 923.4	349	M 931.4	413	M 939.4	477	M 947.4
286	M 923.5	350	M 931.5	414	M 939.5	478	M 947.5

No.	Flag	No.	Flag	No.	Flag	No.	Flag
287	M 923.6	351	M 931.6	415	M 939.6	479	M 947.6
288	M 923.7	352	M 931.7	416	M 939.7	480	M 947.7
289	M 924.0	353	M 932.0	417	M 940.0	481	M 948.0
290	M 924.1	354	M 932.1	418	M 940.1	482	M 948.1
291	M 924.2	355	M 932.2	419	M 940.2	483	M 948.2
292	M 924.3	356	M 932.3	420	M 940.3	484	M 948.3
293	M 924.4	357	M 932.4	421	M 940.4	485	M 948.4
294	M 924.5	358	M 932.5	422	M 940.5	486	M 948.5
295	M 924.6	359	M 932.6	423	M 940.6	487	M 948.6
296	M 924.7	360	M 932.7	424	M 940.7	488	M 948.7
297	M 925.0	361	M 933.0	425	M 941.0	489	M 949.0
298	M 925.1	362	M 933.1	426	M 941.1	490	M 949.1
299	M 925.2	363	M 933.2	427	M 941.2	491	M 949.2
300	M 925.3	364	M 933.3	428	M 941.3	492	M 949.3
301	M 925.4	365	M 933.4	429	M 941.4	493	M 949.4
302	M 925.5	366	M 933.5	430	M 941.5	494	M 949.5
303	M 925.6	367	M 933.6	431	M 941.6	495	M 949.6
304	M 925.7	368	M 933.7	432	M 941.7	496	M 949.7
305	M 926.0	369	M 934.0	433	M 942.0	497	M 950.0
306	M 926.1	370	M 934.1	434	M 942.1	498	M 950.1
307	M 926.2	371	M 934.2	435	M 942.2	499	M 950.2
308	M 926.3	372	M 934.3	436	M 942.3	500	M 950.3
309	M 926.4	373	M 934.4	437	M 942.4	501	M 950.4
310	M 926.5	374	M 934.5	438	M 942.5	502	M 950.5
311	M 926.6	375	M 934.6	439	M 942.6	503	M 950.6
312	M 926.7	376	M 934.7	440	M 942.7	504	M 950.7
313	M 927.0	377	M 935.0	441	M 943.0	505	M 951.0
314	M 927.1	378	M 935.1	442	M 943.1	506	M 951.1
315	M 927.2	379	M 935.2	443	M 943.2	507	M 951.2
316	M 927.3	380	M 935.3	444	M 943.3	508	M 951.3
317	M 927.4	381	M 935.4	445	M 943.4	509	M 951.4
318	M 927.5	382	M 935.5	446	M 943.5	510	M 951.5
319	M 927.6	383	M 935.6	447	M 943.6	511	M 951.6
320	M 927.7	384	M 935.7	448	M 943.7	512	M 951.7

MSG flag assignment (513-768):

No. = flag	No. = flag	No. = flag	No. = flag
513 = M 1016.0	577 = M 1024.0	641 = M 1032.0	705 = M 1040.0
514 = M 1016.1	578 = M 1024.1	642 = M 1032.1	706 = M 1040.1
515 = M 1016.2	579 = M 1024.2	643 = M 1032.2	707 = M 1040.2
516 = M 1016.3	580 = M 1024.3	644 = M 1032.3	708 = M 1040.3
517 = M 1016.4	581 = M 1024.4	645 = M 1032.4	709 = M 1040.4

518 = M 1016.5	582 = M 1024.5	646 = M 1032.5	710 = M 1040.5
519 = M 1016.6	583 = M 1024.6	647 = M 1032.6	711 = M 1040.6
520 = M 1016.7	584 = M 1024.7	648 = M 1032.7	712 = M 1040.7
521 = M 1017.0	585 = M 1025.0	649 = M 1033.0	713 = M 1041.0
522 = M 1017.1	586 = M 1025.1	650 = M 1033.1	714 = M 1041.1
523 = M 1017.2	587 = M 1025.2	651 = M 1033.2	715 = M 1041.2
524 = M 1017.3	588 = M 1025.3	652 = M 1033.3	716 = M 1041.3
525 = M 1017.4	589 = M 1025.4	653 = M 1033.4	717 = M 1041.4
526 = M 1017.5	590 = M 1025.5	654 = M 1033.5	718 = M 1041.5
527 = M 1017.6	591 = M 1025.6	655 = M 1033.6	719 = M 1041.6
528 = M 1017.7	592 = M 1025.7	656 = M 1033.7	720 = M 1041.7
529 = M 1018.0	593 = M 1026.0	657 = M 1034.0	721 = M 1042.0
530 = M 1018.1	594 = M 1026.1	658 = M 1034.1	722 = M 1042.1
531 = M 1018.2	595 = M 1026.2	659 = M 1034.2	723 = M 1042.2
532 = M 1018.3	596 = M 1026.3	660 = M 1034.3	724 = M 1042.3
533 = M 1018.4	597 = M 1026.4	661 = M 1034.4	725 = M 1042.4
534 = M 1018.5	598 = M 1026.5	662 = M 1034.5	726 = M 1042.5
535 = M 1018.6	599 = M 1026.6	663 = M 1034.6	727 = M 1042.6
536 = M 1018.7	600 = M 1026.7	664 = M 1034.7	728 = M 1042.7
537 = M 1019.0	601 = M 1027.0	665 = M 1035.0	729 = M 1043.0
538 = M 1019.1	602 = M 1027.1	666 = M 1035.1	730 = M 1043.1
539 = M 1019.2	603 = M 1027.2	667 = M 1035.2	731 = M 1043.2
540 = M 1019.3	604 = M 1027.3	668 = M 1035.3	732 = M 1043.3
541 = M 1019.4	605 = M 1027.4	669 = M 1035.4	733 = M 1043.4
542 = M 1019.5	606 = M 1027.5	670 = M 1035.5	734 = M 1043.5
543 = M 1019.6	607 = M 1027.6	671 = M 1035.6	735 = M 1043.6
544 = M 1019.7	608 = M 1027.7	672 = M 1035.7	736 = M 1043.7
545 = M 1020.0	609 = M 1028.0	673 = M 1036.0	737 = M 1044.0
546 = M 1020.1	610 = M 1028.1	674 = M 1036.1	738 = M 1044.1
547 = M 1020.2	611 = M 1028.2	675 = M 1036.2	739 = M 1044.2
548 = M 1020.3	612 = M 1028.3	676 = M 1036.3	740 = M 1044.3
549 = M 1020.4	613 = M 1028.4	677 = M 1036.4	741 = M 1044.4
550 = M 1020.5	614 = M 1028.5	678 = M 1036.5	742 = M 1044.5
551 = M 1020.6	615 = M 1028.6	679 = M 1036.6	743 = M 1044.6
552 = M 1020.7	616 = M 1028.7	680 = M 1036.7	744 = M 1044.7
553 = M 1021.0	617 = M 1029.0	681 = M 1037.0	745 = M 1045.0
554 = M 1021.1	618 = M 1029.1	682 = M 1037.1	746 = M 1045.1
555 = M 1021.2	619 = M 1029.2	683 = M 1037.2	747 = M 1045.2
556 = M 1021.3	620 = M 1029.3	684 = M 1037.3	748 = M 1045.3
557 = M 1021.4	621 = M 1029.4	685 = M 1037.4	749 = M 1045.4
558 = M 1021.5	622 = M 1029.5	686 = M 1037.5	750 = M 1045.5
559 = M 1021.6	623 = M 1029.6	687 = M 1037.6	751 = M 1045.6
560 = M 1021.7	624 = M 1029.7	688 = M 1037.7	752 = M 1045.7
561 = M 1022.0	625 = M 1030.0	689 = M 1038.0	753 = M 1046.0
562 = M 1022.1	626 = M 1030.1	690 = M 1038.1	754 = M 1046.1
563 = M 1022.2	627 = M 1030.2	691 = M 1038.2	755 = M 1046.2
564 = M 1022.3	628 = M 1030.3	692 = M 1038.3	756 = M 1046.3
565 = M 1022.4	629 = M 1030.4	693 = M 1038.4	757 = M 1046.4
566 = M 1022.5	630 = M 1030.5	694 = M 1038.5	758 = M 1046.5
567 = M 1022.6	631 = M 1030.6	695 = M 1038.6	759 = M 1046.6
568 = M 1022.7	632 = M 1030.7	696 = M 1038.7	760 = M 1046.7
569 = M 1023.0	633 = M 1031.0	697 = M 1039.0	761 = M 1047.0

570 = M 1023.1	634 = M 1031.1	698 = M 1039.1	762 = M 1047.1
571 = M 1023.2	635 = M 1031.2	699 = M 1039.2	763 = M 1047.2
572 = M 1023.3	636 = M 1031.3	700 = M 1039.3	764 = M 1047.3
573 = M 1023.4	637 = M 1031.4	701 = M 1039.4	765 = M 1047.4
574 = M 1023.5	638 = M 1031.5	702 = M 1039.5	766 = M 1047.5
575 = M 1023.6	639 = M 1031.6	703 = M 1039.6	767 = M 1047.6
576 = M 1023.7	640 = M 1031.7	704 = M 1039.7	768 = M 1047.7

MSG flag assignment (513-1024):

No. = flag	No. = flag	No. = flag	No. = flag
769 = M 1048.0	833 = M 1056.0	897 = M 1064.0	961 = M 1072.0
770 = M 1048.1	834 = M 1056.1	898 = M 1064.1	962 = M 1072.1
771 = M 1048.2	835 = M 1056.2	899 = M 1064.2	963 = M 1072.2
772 = M 1048.3	836 = M 1056.3	900 = M 1064.3	964 = M 1072.3
773 = M 1048.4	837 = M 1056.4	901 = M 1064.4	965 = M 1072.4
774 = M 1048.5	838 = M 1056.5	902 = M 1064.5	966 = M 1072.5
775 = M 1048.6	839 = M 1056.6	903 = M 1064.6	967 = M 1072.6
776 = M 1048.7	840 = M 1056.7	904 = M 1064.7	968 = M 1072.7
777 = M 1049.0	841 = M 1057.0	905 = M 1065.0	969 = M 1073.0
778 = M 1049.1	842 = M 1057.1	906 = M 1065.1	970 = M 1073.1
779 = M 1049.2	843 = M 1057.2	907 = M 1065.2	971 = M 1073.2
780 = M 1049.3	844 = M 1057.3	908 = M 1065.3	972 = M 1073.3
781 = M 1049.4	845 = M 1057.4	909 = M 1065.4	973 = M 1073.4
782 = M 1049.5	846 = M 1057.5	910 = M 1065.5	974 = M 1073.5
783 = M 1049.6	847 = M 1057.6	911 = M 1065.6	975 = M 1073.6
784 = M 1049.7	848 = M 1057.7	912 = M 1065.7	976 = M 1073.7
785 = M 1050.0	849 = M 1058.0	913 = M 1066.0	977 = M 1074.0
786 = M 1050.1	850 = M 1058.1	914 = M 1066.1	978 = M 1074.1
787 = M 1050.2	851 = M 1058.2	915 = M 1066.2	979 = M 1074.2
788 = M 1050.3	852 = M 1058.3	916 = M 1066.3	980 = M 1074.3
789 = M 1050.4	853 = M 1058.4	917 = M 1066.4	981 = M 1074.4
790 = M 1050.5	854 = M 1058.5	918 = M 1066.5	982 = M 1074.5
791 = M 1050.6	855 = M 1058.6	919 = M 1066.6	983 = M 1074.6
792 = M 1050.7	856 = M 1058.7	920 = M 1066.7	984 = M 1074.7
793 = M 1051.0	857 = M 1059.0	921 = M 1067.0	985 = M 1075.0
794 = M 1051.1	858 = M 1059.1	922 = M 1067.1	986 = M 1075.1
795 = M 1051.2	859 = M 1059.2	923 = M 1067.2	987 = M 1075.2
796 = M 1051.3	860 = M 1059.3	924 = M 1067.3	988 = M 1075.3
797 = M 1051.4	861 = M 1059.4	925 = M 1067.4	989 = M 1075.4
798 = M 1051.5	862 = M 1059.5	926 = M 1067.5	990 = M 1075.5
799 = M 1051.6	863 = M 1059.6	927 = M 1067.6	991 = M 1075.6
800 = M 1051.7	864 = M 1059.7	928 = M 1067.7	992 = M 1075.7
801 = M 1052.0	865 = M 1060.0	929 = M 1068.0	993 = M 1076.0
802 = M 1052.1	866 = M 1060.1	930 = M 1068.1	994 = M 1076.1
803 = M 1052.2	867 = M 1060.2	931 = M 1068.2	995 = M 1076.2
804 = M 1052.3	868 = M 1060.3	932 = M 1068.3	996 = M 1076.3
805 = M 1052.4	869 = M 1060.4	933 = M 1068.4	997 = M 1076.4
806 = M 1052.5	870 = M 1060.5	934 = M 1068.5	998 = M 1076.5
807 = M 1052.6	871 = M 1060.6	935 = M 1068.6	999 = M 1076.6
808 = M 1052.7	872 = M 1060.7	936 = M 1068.7	1000 = M 1076.7
809 = M 1053.0	873 = M 1061.0	937 = M 1069.0	1001 = M 1077.0

810 = M 1053.1	874 = M 1061.1	938 = M 1069.1	1002 = M 1077.1
811 = M 1053.2	875 = M 1061.2	939 = M 1069.2	1003 = M 1077.2
812 = M 1053.3	876 = M 1061.3	940 = M 1069.3	1004 = M 1077.3
813 = M 1053.4	877 = M 1061.4	941 = M 1069.4	1005 = M 1077.4
814 = M 1053.5	878 = M 1061.5	942 = M 1069.5	1006 = M 1077.5
815 = M 1053.6	879 = M 1061.6	943 = M 1069.6	1007 = M 1077.6
816 = M 1053.7	880 = M 1061.7	944 = M 1069.7	1008 = M 1077.7
817 = M 1054.0	881 = M 1062.0	945 = M 1070.0	1009 = M 1078.0
818 = M 1054.1	882 = M 1062.1	946 = M 1070.1	1010 = M 1078.1
819 = M 1054.2	883 = M 1062.2	947 = M 1070.2	1011 = M 1078.2
820 = M 1054.3	884 = M 1062.3	948 = M 1070.3	1012 = M 1078.3
821 = M 1054.4	885 = M 1062.4	949 = M 1070.4	1013 = M 1078.4
822 = M 1054.5	886 = M 1062.5	950 = M 1070.5	1014 = M 1078.5
823 = M 1054.6	887 = M 1062.6	951 = M 1070.6	1015 = M 1078.6
824 = M 1054.7	888 = M 1062.7	952 = M 1070.7	1016 = M 1078.7
825 = M 1055.0	889 = M 1063.0	953 = M 1071.0	1017 = M 1079.0
826 = M 1055.1	890 = M 1063.1	954 = M 1071.1	1018 = M 1079.1
827 = M 1055.2	891 = M 1063.2	955 = M 1071.2	1019 = M 1079.2
828 = M 1055.3	892 = M 1063.3	956 = M 1071.3	1020 = M 1079.3
829 = M 1055.4	893 = M 1063.4	957 = M 1071.4	1021 = M 1079.4
830 = M 1055.5	894 = M 1063.5	958 = M 1071.5	1022 = M 1079.5
831 = M 1055.6	895 = M 1063.6	959 = M 1071.6	1023 = M 1079.6
832 = M 1055.7	896 = M 1063.7	960 = M 1071.7	1024 = M 1079.7

The assignment of the flag bit to the message instance can also be taken from the Step 7 symbol table.

Interface to MSG

HUP MELD	Hooter message	M 99.7
HUP S FLAG	Group flag hooter (ICM, SEQU, AIN, MSG)	M 107.1

The hooter flag is to be processed and reset by the user.

3.18 AIN - Measured value recording

3.18.1 AIN - Measured value recording

The AIN block registers and processes up to 256 analog values (per PCU). In case of a fault, this analog value is marked as faulty (STOE), a projected substitute value is entered (STWE) and an appropriate error message is printed to the message file if it's enabled (MLDG_SPERR). In addition, the hooter flag (M 99.6) and the group fault flag (M 107.1) are set.

The physical and the digital start and limit ranges may be configured.

The preset of digital range limits has the advantage of adapting several output modules e.g. SIMATIC S5, SIMATIC S7, and other vendors.

The registered analog value is then subjected to linear adjustment in the area of XANF - XEND and a linear calculation is performed according to the digital limits (DigX_ANF, DigX_END) to convert it into digital units.

Explanation:

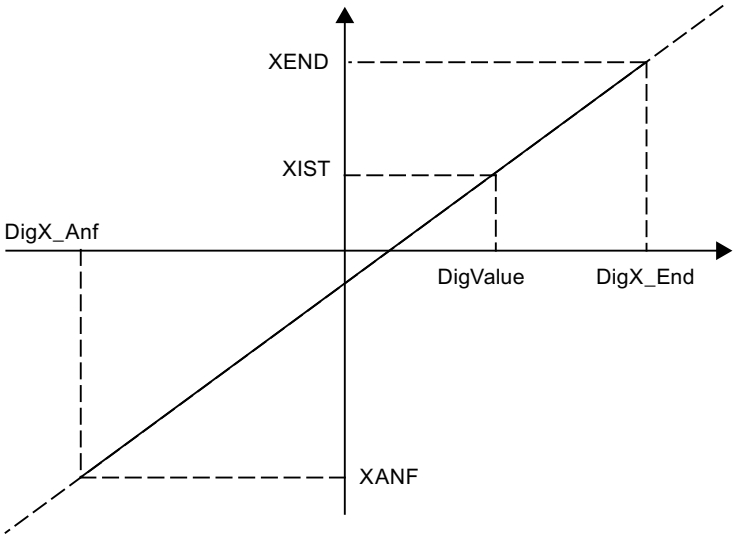

Additionally, it is possible to define a lower (UNTGR), upper limit value (OBERGR) with different levels of hysteresis. The control of these limits follows analogoulsy to the MVC function block. The limit violation is displayed by the corresponding flag.
For the upper limit, the hysteresis band is situated below the trigger value, and for the lower limit above it. A message for limit violation (FREI_FUG, FREI_FOG) can be enabled on behalf of parameterization.

If the simulation bit (SIMU) is set, there is no adaption and no access to the output module.

Processing of the measured value is done only if the digital old value and the input digital new value are different. This has to be taken into account as long as no interface modules are connected.

Function of limit value bits

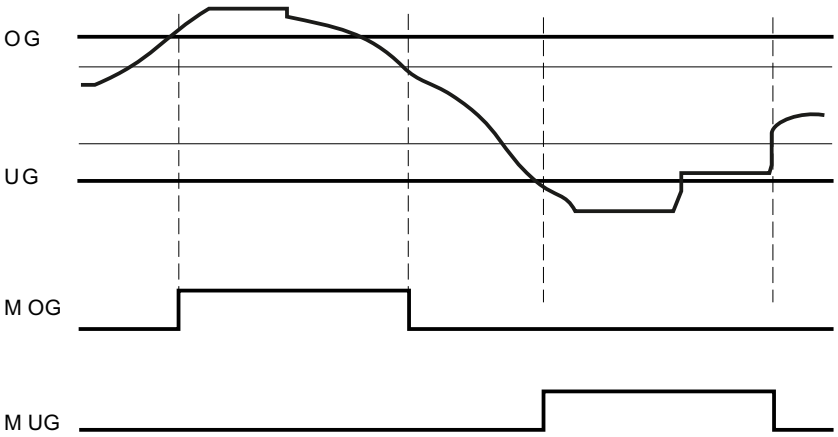

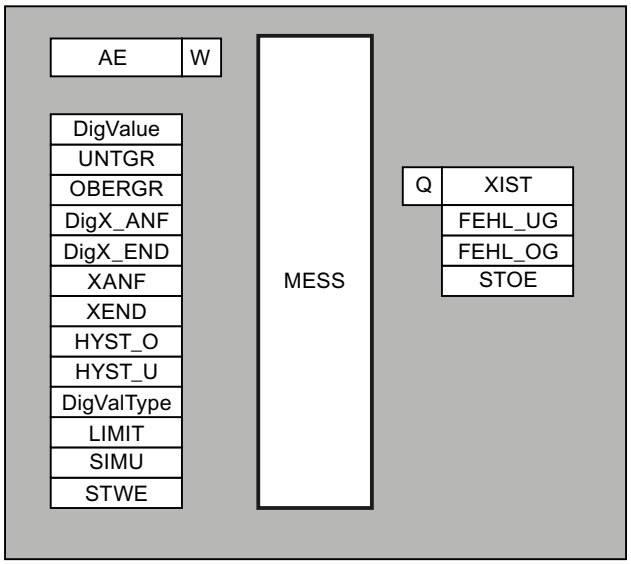

A parameter set is assigned to each analog value.

Parameter set: Parameterization AIN
Interface: to AIN: HUPM, HUPS
Assignment of limit value bits

Global data for block AIN: Parameterization PCU

AIN PCU		DB727		Sets: max. 256 per PCU
No.	**NAME**	**TYPE**	**Preset**	**Comment**
1	MessAnz	I16	1	Number of AIN
2	DS_Len	I16	64	Data set length
3*	Offset	I16	300	Offset to 1st data record

AIN PCU		DB727		Sets: max. 256 per PCU
4*	MaxDS	I16	256	Maximum DS count
5*	OffsRun	I16	100	Offset to runtime copy
6	NoAltNeu	B1	0	No old/new comparison, data sets always processed

Parameter sets for block AIN: Parameterization PCU

AIN PCU		DB727		Sets: max. 256 per PCU
No.	NAME	TYPE	Preset	Comment
1	XIST	I16	0	Actual value
2	DigX_ANF	I16	0	Digital initial value
3	DigX_END	I16	27684	Digital final value
4	XANF	I16	0	Start value
5	XEND	I16	1200	End value
6	UNTGR	I16	100	Lower limit
7	HYST_U	I16	0	Hysteresis lower limit
8	OBERGR	I16	800	Upper limit
9	HYST_O	I16	0	Hysteresis upper limit
10	SEQU	BYTE	0	Assigned sequence 1..64
11	DigValType	BYTE	0	Analog input format: 0 = S7 format 5 = S5 format (two's complement) 6 = S5 format (amount + sign)
12	STWE	B1	0	XIST on error: 0/1 = XANF/ END
13	SIMU	B1	0	Simulation: 0/1 = off/on
14	STOE	B1	0	Fault: 0/1 = No/Yes
15	FEHL_UG	B1	0	Error level lower limit
16	FEHL_OG	B1	0	Error level upper limit
17	FREI_FUG	B1	0	Enable error output lower limit
18	FREI_FOG	B1	0	Enable error output upper limit
19	MLDG_SPERR	B1	0	No fault message at under/overflow
20	LIMIT	B1	0	Limitation XANF<=XIST<=XEND
21	S5Live	B1	0	S5 type: Open-circuit monitoring < 2.9 mA
22*	Overflow	B1	0	Overflow bit
23*	Underflow	B1	0	Underflow bit
24*	Error	B1	0	Error bit: Underflow or overflow
25*	DigValPEW	I16	0	Hardware-dependent digital analog input rare value
26*	DigValue	I16	0	Hardware-independent digital analog input value
27*	DigValOld	I16	-1	Old digital analog input value
28*	Status	I16	0	Status as word

Text parameterization IOS

AIN IOS			Sets: max. 256 per PCU
No.	Type	Preset	Comment
1	Z16	AIN xxx	Block name

Examples:

Example 1:

Use of AIN with Analog Input Module (0..10 V)

Presets/Adjustments	S5	S7
Parameterization hardware	Not applicable (Module e.g. 6ES5 465-4UA12)	Change of hardware configuration in S7 project: Type of output: U Output range: 0..10V
Adjustments in SISTAR parameterization	DigX_ANF = 0 (preset) DigX_END = 2048 XANF = 0 (0.0%) (preset) XEND = 1000 (100.0%) DigValType = 5 (S5)	DigX_ANF = 0 (preset) DigX_END = 27648 (preset) XANF = 0 (0.0%) (preset) XEND = 1000 (100.0%) DigValType = 0 (S7) 1

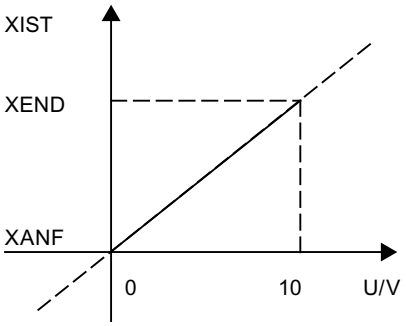

Example 2:

Use of AIN with Analog Input Module (4..20mA)

Presets/Adjustments	S5	S7
Parameterization hardware	Not applicable (Module e.g. 6ES5 464-8ME11)	Change of hardware configuration in S7 project: Type of output: I Output range: 4..20mA
Adjustments in SISTAR parameterization	DigX_ANF = 512 (preset) DigX_END = 2560 XANF = 0 (0.0%) (preset) XEND = 1000 (100.0%) DigValType = 5 (S5)	DigX_ANF = 0 (preset) DigX_END = 27648 (preset) XANF = 0 (0.0%) (preset) XEND = 1000 (100.0%) DigValType = 0 (S7) 2

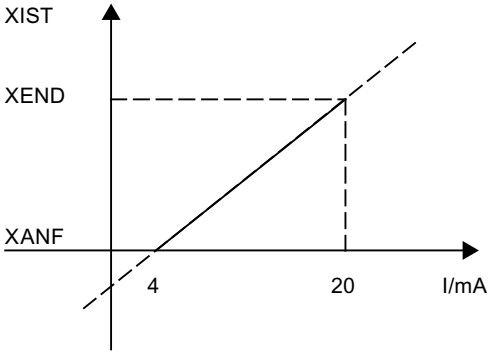

Example 3:

Use of AIN with a PT 100

Presets/Adjustments	S5	S7
Parameterization hardware	Not applicable (Module e.g. 6ES5 464-8MF21)	Change of hardware configuration in S7 project: Selection of analog module Adjustment of required values
Adjustments in SISTAR parameterization	DigX_ANF = -200 DigX_END = 1700 XANF = -100 (0.0%) XEND = 850 (100.0%) DigValType = 5 (S5)	DigX_ANF = -2000 DigX_END = 8500 XANF = -200.0 (0.0%) XEND = 850.0 (100.0%) DigValType = 0 (S7) 3

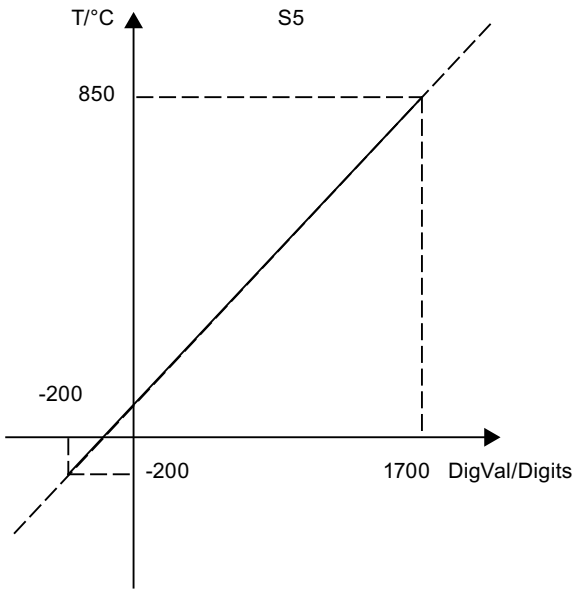

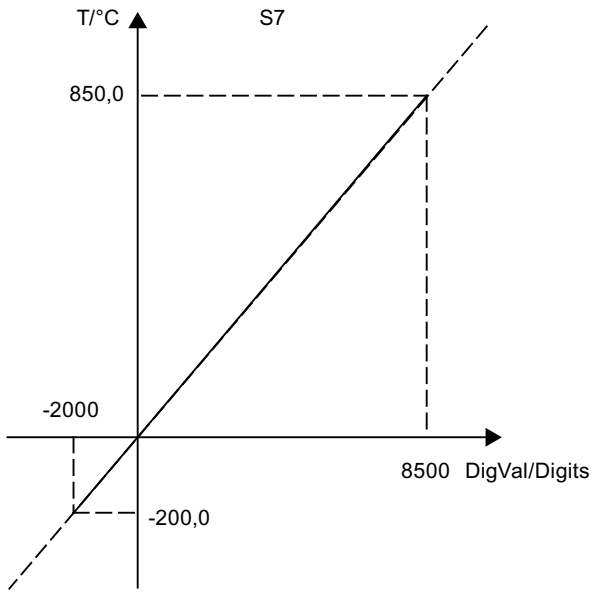

AIN interface		
HUPE-MESS	Hooter flag	M 99.6
HUP S FLAG	Group flag hooter (ICM, SEQU, AIN, MSG)	M 107.1

The hooter flag is to be processed and reset by the user.

Assignment limit value bit - AIN

AIN no.	LOWER LIMIT	UPPER LIMIT	AIN no.	LOWER LIMIT	UPPER LIMIT
1	M 1144.0	M 1176.0	33	M 1148.0	M 1180.0
2	M 1144.1	M 1176.1	34	M 1148.1	M 1180.1
3	M 1144.2	M 1176.2	35	M 1148.2	M 1180.2
4	M 1144.3	M 1176.3	36	M 1148.3	M 1180.3
5	M 1144.4	M 1176.4	37	M 1148.4	M 1180.4
6	M 1144.5	M 1176.5	38	M 1148.5	M 1180.5
7	M 1144.6	M 1176.6	39	M 1148.6	M 1180.6
8	M 1144.7	M 1176.7	40	M 1148.7	M 1180.7
9	M 1145.0	M 1177.0	41	M 1149.0	M 1181.0
10	M 1145.1	M 1177.1	42	M 1149.1	M 1181.1
11	M 1145.2	M 1177.2	43	M 1149.2	M 1181.2
12	M 1145.3	M 1177.3	44	M 1149.3	M 1181.3
13	M 1145.4	M 1177.4	45	M 1149.4	M 1181.4
14	M 1145.5	M 1177.5	46	M 1149.5	M 1181.5
15	M 1145.6	M 1177.6	47	M 1149.6	M 1181.6

AIN no.	LOWER LIMIT	UPPER LIMIT	AIN no.	LOWER LIMIT	UPPER LIMIT
16	M 1145.7	M 1177.7	48	M 1150.7	M 1181.7
17	M 1146.0	M 1178.0	49	M 1150.0	M 1182.0
18	M 1146.1	M 1178.1	50	M 1150.1	M 1182.1
19	M 1146.2	M 1178.2	51	M 1150.2	M 1182.2
20	M 1146.3	M 1178.3	52	M 1150.3	M 1182.3
21	M 1146.4	M 1178.4	53	M 1150.4	M 1182.4
22	M 1146.5	M 1178.5	54	M 1150.5	M 1182.5
23	M 1146.6	M 1178.6	55	M 1150.6	M 1182.6
24	M 1146.7	M 1178.7	56	M 1150.7	M 1182.7
25	M 1147.0	M 1179.0	57	M 1151.0	M 1183.0
26	M 1147.1	M 1179.1	58	M 1151.1	M 1183.1
27	M 1147.2	M 1179.2	59	M 1151.2	M 1183.2
28	M 1147.3	M 1179.3	60	M 1151.3	M 1183.3
29	M 1147.4	M 1179.4	61	M 1151.4	M 1183.4
30	M 1147.5	M 1179.5	62	M 1151.5	M 1183.5
31	M 1147.6	M 1179.6	63	M 1151.6	M 1183.6
32	M 1147.7	M 1179.7	64	M 1151.7	M 1183.7

Assignment limit value bit - AIN

AIN no.	LOWER LIMIT	UPPER LIMIT	AIN no.	LOWER LIMIT	UPPER LIMIT
65	M 1152.0	M 1184.0	97	M 1156.0	M 1188.0
66	M 1152.1	M 1184.1	98	M 1156.1	M 1188.1
67	M 1152.2	M 1184.2	99	M 1156.2	M 1188.2
68	M 1152.3	M 1184.3	100	M 1156.3	M 1188.3
69	M 1152.4	M 1184.4	101	M 1156.4	M 1188.4
70	M 1152.5	M 1184.5	102	M 1156.5	M 1188.5
71	M 1152.6	M 1184.6	103	M 1156.6	M 1188.6
72	M 1152.7	M 1184.7	104	M 1156.7	M 1188.7
73	M 1153.0	M 1185.0	105	M 1157.0	M 1189.0
74	M 1153.1	M 1185.1	106	M 1157.1	M 1189.1
75	M 1153.2	M 1185.2	107	M 1157.2	M 1189.2
76	M 1153.3	M 1185.3	108	M 1157.3	M 1189.3
77	M 1153.4	M 1185.4	109	M 1157.4	M 1189.4
78	M 1153.5	M 1185.5	110	M 1157.5	M 1189.5
79	M 1153.6	M 1185.6	111	M 1157.6	M 1189.6
80	M 1153.7	M 1185.7	112	M 1157.7	M 1189.7
81	M 1154.0	M 1186.0	113	M 1158.0	M 1190.0
82	M 1154.1	M 1186.1	114	M 1158.1	M 1190.1
83	M 1154.2	M 1186.2	115	M 1158.2	M 1190.2

AIN no.	LOWER LIMIT	UPPER LIMIT	AIN no.	LOWER LIMIT	UPPER LIMIT
84	M 1154.3	M 1186.3	116	M 1158.3	M 1190.3
85	M 1154.4	M 1186.4	117	M 1158.4	M 1190.4
86	M 1154.5	M 1186.5	118	M 1158.5	M 1190.5
87	M 1154.6	M 1186.6	119	M 1158.6	M 1190.6
88	M 1154.7	M 1186.7	120	M 1158.7	M 1190.7
89	M 1155.0	M 1187.0	121	M 1159.0	M 1191.0
90	M 1155.1	M 1187.1	122	M 1159.1	M 1191.1
91	M 1155.2	M 1187.2	123	M 1159.2	M 1191.2
92	M 1155.3	M 1187.3	124	M 1159.3	M 1191.3
93	M 1155.4	M 1187.4	125	M 1159.4	M 1191.4
94	M 1155.5	M 1187.5	126	M 1159.5	M 1191.5
95	M 1155.6	M 1187.6	127	M 1159.6	M 1191.6
96	M 1155.7	M 1187.7	128	M 1159.7	M 1191.7

Assignment limit value bit - AIN

AIN no.	LOWER LIMIT	UPPER LIMIT	AIN no.	LOWER LIMIT	UPPER LIMIT
129	M 1160.0	M 1192.0	161	M 1164.0	M 1196.0
130	M 1160.1	M 1192.1	162	M 1164.1	M 1196.1
131	M 1160.2	M 1192.2	163	M 1164.2	M 1196.2
132	M 1160.3	M 1192.3	164	M 1164.3	M 1196.3
133	M 1160.4	M 1192.4	165	M 1164.4	M 1196.4
134	M 1160.5	M 1192.5	166	M 1164.5	M 1196.5
135	M 1160.6	M 1192.6	167	M 1164.6	M 1196.6
136	M 1160.7	M 1192.7	168	M 1164.7	M 1196.7
137	M 1161.0	M 1193.0	169	M 1165.0	M 1197.0
138	M 1161.1	M 1193.1	170	M 1165.1	M 1197.1
139	M 1161.2	M 1193.2	171	M 1165.2	M 1197.2
140	M 1161.3	M 1193.3	172	M 1165.3	M 1197.3
141	M 1161.4	M 1193.4	173	M 1165.4	M 1197.4
142	M 1161.5	M 1193.5	174	M 1165.5	M 1197.5
143	M 1161.6	M 1193.6	175	M 1165.6	M 1197.6
144	M 1161.7	M 1193.7	176	M 1165.7	M 1197.7
145	M 1162.0	M 1194.0	177	M 1166.0	M 1198.0
146	M 1162.1	M 1194.1	178	M 1166.1	M 1198.1
147	M 1162.2	M 1194.2	179	M 1166.2	M 1198.2
148	M 1162.3	M 1194.3	180	M 1166.3	M 1198.3
149	M 1162.4	M 1194.4	181	M 1166.4	M 1198.4
150	M 1162.5	M 1194.5	182	M 1166.5	M 1198.5
151	M 1162.6	M 1194.6	183	M 1166.6	M 1198.6

AIN no.	LOWER LIMIT	UPPER LIMIT	AIN no.	LOWER LIMIT	UPPER LIMIT
152	M 1162.7	M 1194.7	184	M 1166.7	M 1198.7
153	M 1163.0	M 1195.0	185	M 1167.0	M 1199.0
154	M 1163.1	M 1195.1	186	M 1167.1	M 1199.1
155	M 1163.2	M 1195.2	187	M 1167.2	M 1199.2
156	M 1163.3	M 1195.3	188	M 1167.3	M 1199.3
157	M 1163.4	M 1195.4	189	M 1167.4	M 1199.4
158	M 1163.5	M 1195.5	190	M 1167.5	M 1199.5
159	M 1163.6	M 1195.6	191	M 1167.6	M 1199.6
160	M 1163.7	M 1195.7	192	M 1167.7	M 1199.7

Assignment limit value bit - AIN

AIN no.	LOWER LIMIT	UPPER LIMIT	AIN no.	LOWER LIMIT	UPPER LIMIT
193	M 1168.0	M 1200.0	225	M 1172.0	M 1204.0
194	M 1168.1	M 1200.1	226	M 1172.1	M 1204.1
195	M 1168.2	M 1200.2	227	M 1172.2	M 1204.2
196	M 1168.3	M 1200.3	228	M 1172.3	M 1204.3
197	M 1168.4	M 1200.4	229	M 1172.4	M 1204.4
198	M 1168.5	M 1200.5	230	M 1172.5	M 1204.5
199	M 1168.6	M 1200.6	231	M 1172.6	M 1204.6
200	M 1168.7	M 1200.7	232	M 1172.7	M 1204.7
201	M 1169.0	M 1201.0	233	M 1173.0	M 1205.0
202	M 1169.1	M 1201.1	234	M 1173.1	M 1205.1
203	M 1169.2	M 1201.2	235	M 1173.2	M 1205.2
204	M 1169.3	M 1201.3	236	M 1173.3	M 1205.3
205	M 1169.4	M 1201.4	237	M 1173.4	M 1205.4
206	M 1169.5	M 1201.5	238	M 1173.5	M 1205.5
207	M 1169.6	M 1201.6	239	M 1173.6	M 1205.6
208	M 1169.7	M 1201.7	240	M 1173.7	M 1205.7
209	M 1170.0	M 1202.0	241	M 1174.0	M 1206.0
210	M 1170.1	M 1202.1	242	M 1174.1	M 1206.1
211	M 1170.2	M 1202.2	243	M 1174.2	M 1206.2
212	M 1170.3	M 1202.3	244	M 1174.3	M 1206.3
213	M 1170.4	M 1202.4	245	M 1174.4	M 1206.4
214	M 1170.5	M 1202.5	246	M 1174.5	M 1206.5
215	M 1170.6	M 1202.6	247	M 1174.6	M 1206.6
216	M 1170.7	M 1202.7	248	M 1174.7	M 1206.7
217	M 1171.0	M 1203.0	249	M 1175.0	M 1207.0
218	M 1171.1	M 1203.1	250	M 1175.1	M 1207.1
219	M 1171.2	M 1203.2	251	M 1175.2	M 1207.2

AIN no.	LOWER LIMIT	UPPER LIMIT	AIN no.	LOWER LIMIT	UPPER LIMIT
220	M 1171.3	M 1203.3	252	M 1175.3	M 1207.3
221	M 1171.4	M 1203.4	253	M 1175.4	M 1207.4
222	M 1171.5	M 1203.5	254	M 1175.5	M 1207.5
223	M 1171.6	M 1203.6	255	M 1175.6	M 1207.6
224	M 1171.7	M 1203.7	256	M 1175.7	M 1207.7

3.18.2 AVA_PW

The peripheral addresses of AIN blocks does not have to be arranged in consecutive order.

The system may be informed by the class with max. 25 ranges from which it reads out the rare values (starting with range 1).

The peripheral start address and the number of rare values has to be defined per range.

Global data for block AVA_PW: Parameterization PCU

AVA_PW PCU		DB727		Sets: max. 25 per PCU
No.	NAME	TYPE	Preset	Comment
1	DS_Len	I16	64	Data set length
2*	Offset	I16	300	Offset to 1st data record
3*	MaxDS	I16	256	Maximum DS count
4*	OffsRun	I16	100	Offset to runtime copy

* hidden attributes

Parameter sets for block AVA_PW: Parameterization PCU

AVA_PW PCU		DB727		Sets: max. 25 per PCU
No.	NAME	TYPE	Preset	Comment
1	PW	I16	0	Start address PEW range (-1 = list end)
2	Num	I16	0	Range length in PEW (0 = list end)

The ranges have to be occupied starting with range 1,

which is preset in the delivery state with:

PW = 512, Num = 256. That means all analog values are read in starting from PEW 512

If the system finds a range PW = -1 then the input of rare values is stopped as well as at Num <= 0.

Text parameterization IOS

AVA_PW IOS			Sets: max. 25 per PCU
No.	Type	Preset	Comment
1	Z16	AVA_PW	Block name

3.19 MULT - Multifunction block

The multifunction block has 2 inputs and one output, and is able to work up to 128 times in various functions. Each block occupies one flag bit, which can have various meanings depending on its function.

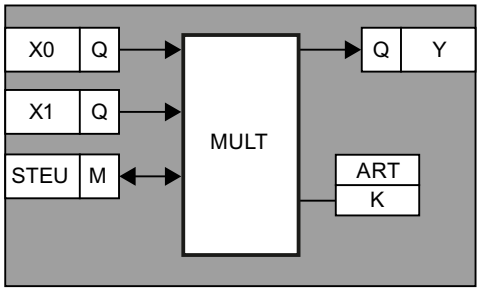

Parameter set: Parameterization PCU, text parameterization IOS
Description: Available functions
User interface: Assignment MULT to flag bit

Global data for block MULT: Parameterization PCU

MULT PCU		DB732		Sets: max. 128 per PCU
No.	NAME	TYPE	Preset	Comment
1	MULTAnz	I16	1	MULT count
2	DS_Len	I16	20	Data set length
3*	Offset	I16	300	Offset to 1st data record
4*	MaxDS	I16	128	Maximum DS count
5*	OffsRun	I16	100	Offset to runtime copy

* hidden attributes

Parameter sets for block MULT: Parameterization PCU

MULT PCU		DB732		Sets: max. 128 per PCU
No.	NAME	TYPE	Preset	Comment
1	Y	I16	0	Output value
2	X0	Quell	8000 Hex	1. input value
3	X1	Quell	8000 Hex	2. input value
4	TYPE	I16	0	Mode (0 to 8)
5	K	I16	0	Hysteresis
6*	M	B1	0	Control input

* hidden attributes

All arithmetic functions work in the range of ±32767. With division, the residual is cut off. Division by 0 results in "None". The root extractor gives a result without a residual.

Text parameterization IOS

MULT IOS			Sets: max. 128 per PCU
No.	Type	Preset	Comment
1	Z16	MULT xxx	Block name

Description of the individual functions of the MULT block

TYPE	Name	Flag bit	Description of logic	
0	ASL	Control input	M = 0	Then Y := X0 Else Y := X1
1	MIN	Result	X0 <= X1	Then Y := X0, M := 0 Else Y := X1, M := 1
2	MAX	Result	X0 >= X1	Then Y := X0, M := 0 Else Y := X1, M := 1
3	ADD	Irrelevant	Y := X0 + X1	
4	SUB	Irrelevant	Y := X0 - X1	
5	MUL	Irrelevant	Y := X0 * X1	
6	DIV	Irrelevant	Y := X0 / X1	
7	LI+	Result	Y := 0, M = 1 and X0 > (X1 + K) M = 0 and X0 <= X1	Then M := 0 Then M := 1
8	LI-	Result	Y := 0, M = 1 and X0 < (X1 - K) M = 0 and X0 >= X1	Then M := 0 Then M := 1

User interface: Assignment MULT to flag bit

No.	Flag	No.	Flag	No.	Flag	No.	Flag
1	M 952.0	33	M 956.0	65	M 960.0	97	M 964.0
2	M 952.1	34	M 956.1	66	M 960.1	98	M 964.1
3	M 952.2	35	M 956.2	67	M 960.2	99	M 964.2
4	M 952.3	36	M 956.3	68	M 960.3	100	M 964.3
5	M 952.4	37	M 956.4	69	M 960.4	101	M 964.4
6	M 952.5	38	M 956.5	70	M 960.5	102	M 964.5
7	M 952.6	39	M 956.6	71	M 960.6	103	M 964.6
8	M 952.7	40	M 956.7	72	M 960.7	104	M 964.7
9	M 953.0	41	M 957.0	73	M 961.0	105	M 965.0
10	M 953.1	42	M 957.1	74	M 961.1	106	M 965.1
11	M 953.2	43	M 957.2	75	M 961.2	107	M 965.2
12	M 953.3	44	M 957.3	76	M 961.3	108	M 965.3
13	M 953.4	45	M 957.4	77	M 961.4	109	M 965.4
14	M 953.5	46	M 957.5	78	M 961.5	110	M 965.5
15	M 953.6	47	M 957.6	79	M 961.6	111	M 965.6
16	M 953.7	48	M 957.7	80	M 961.7	112	M 965.7
17	M 954.0	49	M 958.0	81	M 962.0	113	M 966.0
18	M 954.1	50	M 958.1	82	M 962.1	114	M 966.1
19	M 954.2	51	M 958.2	83	M 962.2	115	M 966.2
20	M 954.3	52	M 958.3	84	M 962.3	116	M 966.3
21	M 954.4	53	M 958.4	85	M 962.4	117	M 966.4
22	M 954.5	54	M 958.5	86	M 962.5	118	M 966.5
23	M 954.6	55	M 958.6	87	M 962.6	119	M 966.6
24	M 954.7	56	M 958.7	88	M 962.7	120	M 966.7
25	M 955.0	57	M 959.0	89	M 963.0	121	M 967.0
26	M 955.1	58	M 959.1	90	M 963.1	122	M 967.1
27	M 955.2	59	M 959.2	91	M 963.2	123	M 967.2
28	M 955.3	60	M 959.3	92	M 963.3	124	M 967.3
29	M 955.4	61	M 959.4	93	M 963.4	125	M 967.4
30	M 955.5	62	M 959.5	94	M 963.5	126	M 967.5
31	M 955.6	63	M 959.6	95	M 963.6	127	M 967.6
32	M 955.7	64	M 959.7	96	M 963.7	128	M 967.7

3.20 PCU_GEN - PCU System data in general

The PCU number needs to be entered in this data block. The preassignment is 1 and it is valid for the version with one PCU.

If a value is assigned to the parameter ‘TSynSoll’ then a message of type 7 "date/time" is sent cyclically to those IOSn , which have configured this type in their FIFOs. The message is sent

at the point when TSynIst is zero.
The PCU is the "time master" and synchronizes the timers of the IOSn.

Parameter sets for block PCU_ALG : Parameterization PCU

PCU_ALG PCU		DB701		
No.	NAME	TYPE	Preset	Comment
1*	BoEsgManualOff	B1		ICM mes. -open/close Manual-disabled
2*	BoEsgManualAutoOff	B1		ICM mes. -switched Manual/Auto-disabled
3*	BoMsgEsgForcingEnableOff	B1		ICM msg. ForcingEnable disabled
4*	BoMsgEsgSimFeedbackOff	B1		ICM msg. SimulateFeedback disabled
5*	RepEOPFinalStates	B1		EOP final states messaging
6*	RepEOPQuiesStates	B1		EOP quiet/mean states messaging
7*	RepEOPTransStates	B1		EOP transfer states messaging
8	PCUno	I8	None	PCU number
9*	H	I8	None	Hour
10*	Min	I8	None	Minute
11*	Sec	I8	None	Second
12*	KW	I8	None	Calendar week
13*	Wt	I8	None	1= MO, ... , 7= SU
14*	Tt	I8	None	Day
15*	mm	I8	None	Month
16*	Jj	I8	None	Year
17*	RecServ	I16	None	Active recipe server IOS
18*	KillTele	I16	None	IOS number for killer message trigger
19*	SupVTele	I16	None	IOS number for supervising message trigger
20*	ICM_Mode	I16	None	ICM running mode
21*	TsynSoll	I16	0	Target value for time synchronization
22*	TsynIst	I16	0	Actual value for time synchronization
23	PrgFltSetMask	HEXA32	8000	Program fault set mask
24	PrgFltMasked	HEXA32	8000	Program fault masked
25	AccFltSetMask	HEXA32	8000	Access fault set mask
26	AccFltMasked	HEXA32	8000	Access fault masked
27*	DBNotLoaded	B1		PrgFlt: DB not loaded
28*	FC_NotLoaded	B1		PrgFlt: FC not loaded
29*	SCF_NotLoaded	B1		PrgFlt: SFC not loaded
30*	FB_NotLoaded	B1		PrgFlt: FB not loaded
31*	SFB_Not Loaded	B1		PrgFlt: SFB not loaded
32*	DB_WrErr	B1		PrgFlt: DB write error
33*	DI_WrErr	B1		PrgFlt: DI write error

PCU_ALG PCU		DB701		
34*	DB_NumErr	B1		PrgFlt: DB number error
35*	DI_NumErr	B1		PrgFlt: DI number error
36*	FC_NumErr	B1		PrgFlt: FC number error
37*	FB_NumErr	B1		PrgFlt: FB number error
38*	AlignErrRd	B1		PrgFlt: Alignment error read
39*	AlignErrWr	B1		PrgFlt: Alignment error write
40*	BcdConvErr	B1		PrgFlt: BCD conversion error
41*	AreaLenErrRd	B1		PrgFlt: Area length error read
42*	AreaLenErrWr	B1		PrgFlt: Area length error write
42*	AreaErrRd	B1		PrgFlt: Area error read
43*	AreaErrWr	B1		PrgFlt: Area error read
44*	TimerNumberErr	B1		PrgFlt: Counter number error
45*	CounterNumberErr	B1		PrgFlt: Counter number error
46*	AccFltRd	B1		AccFlt: Periph. access fault read error
47*	AccFltWr	B1		AccFlt: Periph. access fault write error
48*	AccFltRdN	B1		AccFlt: Periph. access fault read err. (n>1)
49*	AccFltWrN	B1		AccFlt: Periph. access fault write err. (n>1)
50	TWarnSoll	I8		Warning time set value – sec
51*	TwarnIst	I8		Warning time actual value – sec
52*	StartDayOfCWeek	I8		Starting day for calendar week: 0=Mo, 1=Su.

* hidden attributes

Parameter set: Text parameterization IOS

PCU_GEN IOS			
No.	Type Info	Preset	Comment
1	Z16 P IOS	PCU_ALG	Block name

Synchronous error events may be masked with the parameters "PrgFltSetMsk" and "AccFltSetMsk".

"Synchronous error" means that the error occurs straight after the action that is responsible for triggering it and that it is handled by the PLC.

Examples:

- Programming error, fault LED "INTF"
- OPNSPECIAL_DB;// DB not loaded

- Access error, fault LED "EXTF"
- LPIW 128// module not plugged

The PLC catches these errors and branches into the according error OB. If it does not exist, the CPU will go into STOP.

If the according mask bit is set, this error is caught and no jump into the error OB takes place. Further, the according fault LED will not be activated.

3.21 PID controller

The block contains all necessary functions for a max. of 64 controllers per PCU. The controller is suitable for:

- Fixed value control
- Cascade control
- Ratio control
- Hardware back-up control

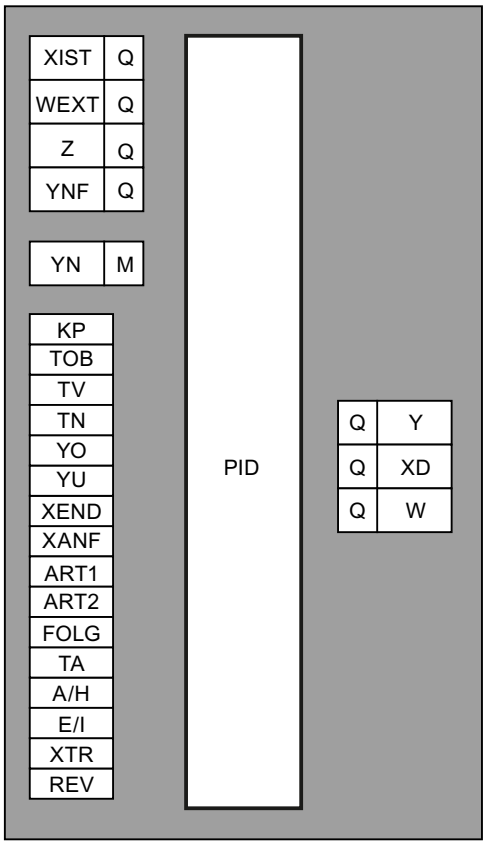

The PID controller functions according to the position algorithm, i.e. Y is being determined for each manipulated variable. By interconnecting Y with the ANAU block you get a continuous controller, interconnecting it with the INKU block gives you an interconnection controller.

Parameter sets: Parameterization PID PCU
Text, controller parameterization PID IOS

Assignment: Controller to controller groups (preassignment)
- User interface: Follow-up flag YN
- Block diagram: PID controller

Operation modes:
- Auto/Manual, External/Internal, X-Tracking (cascade control, hardware-back up, data listing)
- Controller types:
  - ART1
  - ART2

Optimization: PI and PID controller

Global data for block PID: Parameterization PCU

PID PCU		DB730		Sets: max. 64 per PCU
No.	NAME	TYPE	Preset	Comment
1	PIDAnz	I16	1	PID count
2	DS_Len	I16	76	Data set length
3*	Offset	I16	300	Offset to 1st data record
4*	MaxDS	I16	64	Maximum DS count
5*	OffsRun	I16	100	Offset to runtime copy

* hidden attributes

Parameter sets for block PID: Parameterization PCU

PID PCU		DB 730		Sets: max. 64 per PCU
No.	NAME	TYPE	Preset	Comment
1	Y	I16	0	Manipulated variable
2	KP	I16	0	P gain: S7: 0.00-327.67
3	TN	I16	0	Adjusting factor
4	TV	I16	0	Anticipation factor
5	A/H	B1	0	Operation mode: 0/1 = Auto/Manual
6	E/I	B1	0	Setpoint: 0/1 = external/internal
7	W	I16	0	Effective setpoint
8	XIST	Quell	8000 Hex	Actual value of type I16 !
9	WEXT	Quell	8000 Hex	External setpoint of type I16 !
10	Z	Quell	8000 Hex	Disturbance value of type I16 !
11	YNF	Quell	8000 Hex	Follow-up value of type I16 !
12	XD	I16	0	Control deviation
13	XANF	I16	0	Initial limit for XIST, WEXT, W
14	XEND	I16	1000	Deadline for XIST, WEXT, W
15	YU	I16	0	Lower limit for manipulated variable Y

PID PCU		DB 730		Sets: max. 64 per PCU
16	YO	I16	1000	Upper limit for manipulated variable Y
17	TEILANL	Byte	0	Assigned sequence
18	YN	B1	0	YN flag
19	ART1	I16	0	Controller type 1 (see table)
20	ART2	I16	0	Controller type 2 (see table)
21	FOLG	I16	0	Number of following controller
22	TA	I16	0	Sampling time in seconds (0=Lock)
23	TOB	I16	0	Dead band
24	WIED	B1	0	Hot restart: 0/1 = unchanged/Manual
25	REV	B1	0	Reversing duty: 0/1 = No/Yes
26	XTR	B1	0	X-Tracking: 0/1 = No/Yes
27	X	I16	0	Actual value
28	Wex	I16	0	External setpoint
29	Zex	I16	0	External disturbance value
30	YNFex	I16	0	External tracking value
31	INT_US	I16	0	Used internally
32*	Status	I16	0	Status as word

* hidden attributes

Parameter sets for IOS block PID, text parameterization IOS

PID IOS			Sets: max. 64 per PCU
No.	Type	Preset	Comment
1	Z16	PID xxx	Block name

Parameterization of controller groups IOS (bldpid.ini)

4 controllers may be displayed and operated on one page of the screen. One screen page corresponds to a PID group. The assignment of which controller is represented in which group and on which page is carried out in the file "\PCUxxx\REGLER\BLDPID.INI".

Profile string	Description
[GROUPxxx]	Number of group = page of screen
Name=	Name of group
Controler=	Numbers of PID controllers to be displayed
DIM=	Dimensions
DEP=	Decimal points (number of decimal places)

Example:

Controller display 1 is to display controllers 1, 3, 8, 14.

Profile string	Description
[GROUP001]	Screen page 1
Name="MG Heating"	Name of group
Controler=1,3,8,14	Numbers of PID controllers to be displayed
DIM="°C,°C,%,m³/h	Dimensions of the individual controllers
DEP=1,1,2,0	Decimal points (number of decimal places)

Block diagram PID controller:

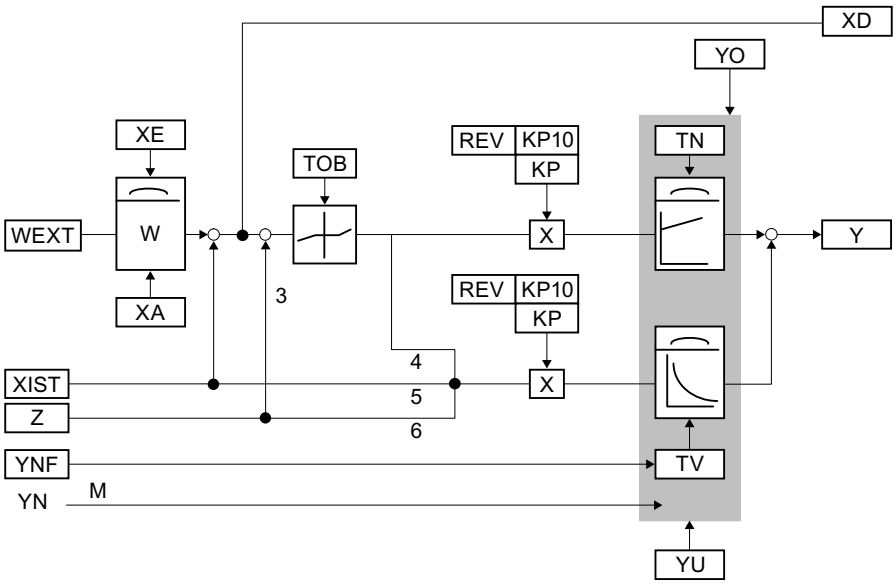

Parameter type1/position jumpers 3-6:

Art1	3456 ("1"= jumper in)
0	1100
1	1010
2	1001
3	0001

Operation modes PID controller

Cascade control:
The manipulated variable Y of the master controller is fed into the following controller as setpoint WEXT. If the following controller is switched from operation mode INTERNAL to operation mode EXTERNAL, the system transfer is bumpless, i.e. the Y of the master controller is adapted to the actual value of the following controller.

Controller with hardware back-up:
Here, the software controller is cascaded by a discrete controller (e.g. TELEPERM D). By means of the flag YN (adjust manipulated variable) the controller program is informed that the HW controller is switched to DDC operation mode.

On the positive edge of the flag YN, Y is adjusted to the given value of the controller at the entrance YNF; the software controller is in Manual mode!

In this context, see also Analog functions example "Controller with back-up".

Operation mode Auto-Manual:
Beginning with the shift from Automatic to Manual operation mode, the controller does not compute new manipulated variables anymore.

The Y that is to be edited may be changed by means of operator input. With every processing cycle the controller compares the actual Y to the limits YO and YU and adjusts it accordingly. Thus, even in the case of a manual input of an inadmissible value, the admissible Y is being cut down to the limits YU and YO.

In the case of changing from Manual to Automatic mode, a balancing similar to cascade control takes place; only, the own position Y is being used as the balancing value. The operation mode transfer is printed automatically to the message file.

Operation mode External-Internal(E/I):
In operation mode Internal, the setpoint W may be set by means of operator input. The adjustment of W to the limits XA and XE is analogous to the adjustment of the manipulated variable in Manual mode. The operation mode transfer is edited automatically by the operation mode printer.

X-Tracking:
In operation mode X-Tracking (XTR = "1"), the internal setpoint is adjusted to the actual value XIST. This renders possible a bumpless transfer from External to Internal.

Logging:
Any shift A/H or E/I is printed out when the messages are freed.

Example "Controller with back-up"

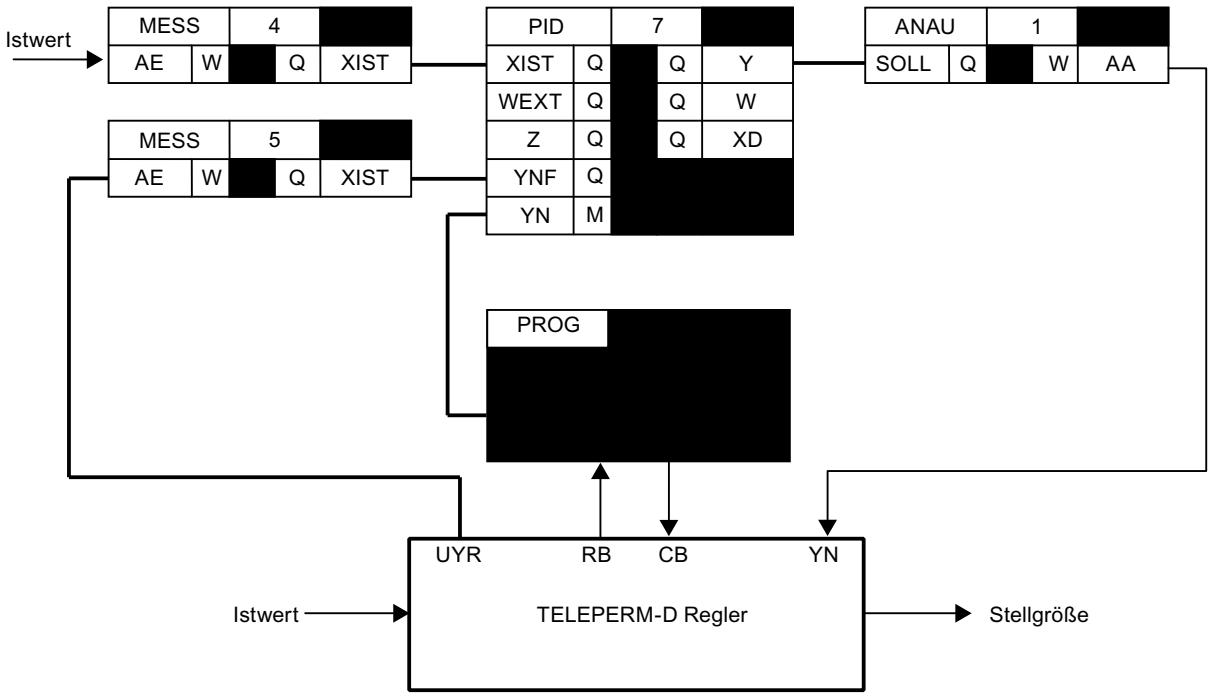

Controller types PID block

Type		Description
ART1	0	PID component: is derived from XD + Z
	1	D component: is derived from XIST; PI from XD + Z
	2	D component: is derived from Z; PI from XD + Z
	3	D component: is derived from any variable on input Z; PI component of X
ART2	0	Type: Fixed-setpoint controller
	4	Type: Master controller
	8	Type: Controller with HW backup; A/H = "1"

User interface: Later flags YN

No.	Flag	No.	Flag	No.	Flag	No.	Flag
1	M 968.0	17	M 970.0	33	M 972.0	49	M 974.0
2	M 968.1	18	M 970.1	34	M 972.1	50	M 974.1
3	M 968.2	19	M 970.2	35	M 972.2	51	M 974.2
4	M 968.3	20	M 970.3	36	M 972.3	52	M 974.3
5	M 968.4	21	M 970.4	37	M 972.4	53	M 974.4

No.	Flag	No.	Flag	No.	Flag	No.	Flag
6	M 968.5	22	M 970.5	38	M 972.5	54	M 974.5
7	M 968.6	23	M 970.6	39	M 972.6	55	M 974.6
8	M 968.7	24	M 970.7	40	M 972.7	56	M 974.7
9	M 969.0	25	M 971.0	41	M 973.0	57	M 975.0
10	M 969.1	26	M 971.1	42	M 973.1	58	M 975.1
11	M 969.2	27	M 971.2	43	M 973.2	59	M 975.2
12	M 969.3	28	M 971.3	44	M 973.3	60	M 975.3
13	M 969.4	29	M 971.4	45	M 973.4	61	M 975.4
14	M 969.5	30	M 971.5	46	M 973.5	62	M 975.5
15	M 969.6	31	M 971.6	47	M 973.6	63	M 975.6
16	M 969.7	32	M 971.7	48	M 973.7	64	M 975.7

The manipulated variable Y is overwritten with the value YNF as long as flag YN is set.

Optimization PID controllers

Setting the control parameters without being familiar with the plant behavior

In this case, the controller parameters for optimum control are not yet known. In order to nonetheless achieve reasonable control, the following adjustments need to be carried out:

Proportional coefficient:	KP	1	(minimum value)
Sampling time:	TA	1	
Adjustment time:	TN	+32767 s	(largest value; 0=> Tn = infinite!)
Set-up time:	TV	0 s	

Controller type	Description
PI controller	Set desired setpoint and reduce system deviation to zero in Manual operation mode
	Switch to Automatic mode
	Increase KP slowly until control loop tends to oscillate at small variations of setpoint
	Slightly decrease KP until oscillations are eliminated
	Decrease TN until control loop tends to oscillate again
	Slightly increase TN until oscillation is eliminated

Controller type	Description
PID controller	Set desired setpoint and reduce system deviation to zero in Manual operation mode
	Switch to automatic mode
	Increase KP slowly until the control circuit starts to vibrate due to small setpoint changes
	Switch TV from 0 to 1 s
	Increase TV until oscillation is eliminated

Controller type	Description
	Slowly increase KP again until oscillation occurs again
	Repeat adjustment following steps stated above until oscillation can not be eliminated anymore
	Decrease TV and KP slightly until oscillation stops
	Reduce TN until the control circuit starts to vibrate again
	Increase TN slightly until tendency to oscillate is eliminated

3.22 POLY - Polygon adjustment

The function enables the conversion of an input value via a polygon with up to 10 interpolation point pairs. The interpolation between the interpolation points is to be linear. 32 interrupt lines are available.

If the input value X lies outside of the interpolation point range (X<X1 or X>X10), the default value Y is set on Y1 or Y10 respectively.

- X is linked to the block by means of interconnection.
- Y serves as a source for other blocks.

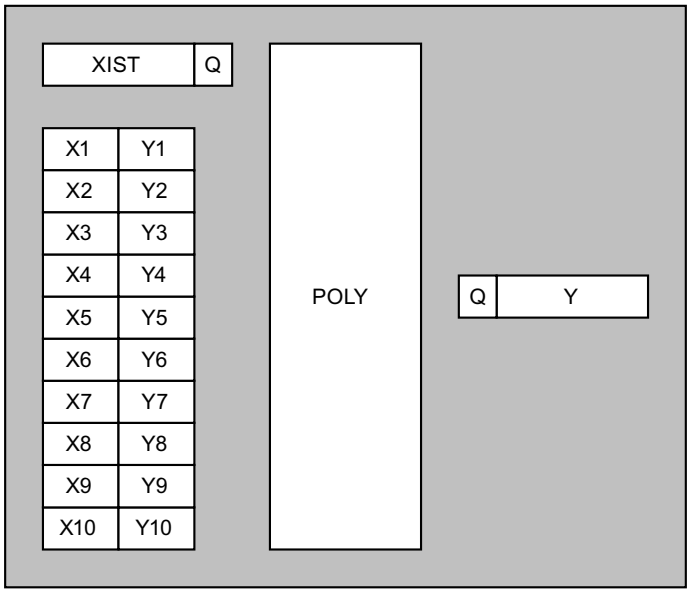

Parameter sets: Parameter assignment POLY PCU
Text parameter assignment POLY IOS

Global data for block POLY : Parameterization PCU

POLY PCU		DB 735		Sets: max. 32 per PCU
No.	NAME	TYPE	Preset	Comment
1	POLYAnz	I16	0	POLY count

POLY PCU		DB 735		Sets: max. 32 per PCU
2	DS_Len	I16	58	Data set length
3*	Offset	I16	300	Offset to 1st data record
4*	MaxDS	I16	32	Maximum DS count
5*	OffsRun	I16	100	Offset to runtime copy

* hidden attributes

Parameter sets for block POLY: Parameterization PCU

POLY PCU		DB 735		Sets: max. 32 per PCU
No.	NAME	TYPE	Preset	Comment
1	Y	I16	0	Output value
2*	Factor	I16	1	Y = calculated value * factor
3	X	Quell	8000 Hex	Data source
4	X1	I16	0	Interpolation point 1: X value
5	Y1	I16	0	Interpolation point 1: Y value
6	X2	I16	0	Interpolation point 2: X value
7	Y2	I16	0	Interpolation point 2: Y value
8	X3	I16	0	Interpolation point 3: X value
9	Y3	I16	0	Interpolation point 3: Y value
10	X4	I16	0	Interpolation point 4: X value
11	Y4	I16	0	Interpolation point 4: Y value
12	X5	I16	0	Interpolation point 5: X value
13	Y5	I16	0	Interpolation point 5: Y value
14	X6	I16	0	Interpolation point 6: X value
15	Y6	I16	0	Interpolation point 6: Y value
16	X7	I16	0	Interpolation point 7: X value
17	Y7	I16	0	Interpolation point 7: Y value
18	X8	I16	0	Interpolation point 8: X value
19	Y8	I16	0	Interpolation point 8: Y value
20	X9	I16	0	Interpolation point 9: X value
21	Y9	I16	0	Interpolation point 9: Y value
22	X10	I16	0	Interpolation point 10: X value
23	Y10	I16	0	Interpolation point 10: Y value

* hidden attributes

Text parameterization IOS

POLY IOS			Sets: max. 32 per PCU
No.	Type	Preset	Comment
1	Z16	POLY xxx	Block name

3.23 SENDPU - Send buffer - 1 to 6

By means of the blocks the state of the connection to the server IOSes may be checked.

The messages are taken from the FIFO and registered in the send buffer of the according server IOS.

The assignment of send buffers to the FIFOs and Servers is fixed.
SENDPU 1..3 (DB674, DB675, DB676) are assigned to FIFOs 1..3 and server 1.
SENDPUs 4..6 (DB694, DB695, DB696) are assigned to FIFOs 4..6 and server 2.

Parameter sets for block SENDPUx: Parameterization PCU

SENPUx PCU		DB 674/675 676/694 695/696		Sets: max. 8 per PCU
Nr.	**NAME**	**TYPE**	**Preset**	**Comment**
1	QUITT_PC	HEXA	8000	Acknowledge from IOS
2	ZUST	I16	#	State of FB 585
3	TUES	I16	#	Monitoring time target value in seconds
4	TUEI	I16	#	Monitoring time actual value
5	TELE_NR	HEXA	8000	Running message no.
6	MAX_RETRY	I16	#	Max. number of retransmissions
7	RETRY_CNT	I16	#	Retransmission counter
8	RET_A8P	I16	#	Return value Alarm_8P
9	ERR_A8P	B1	??	Error Alarm 8P
10	STAT_A8P	I16	#	Status Alarm 8P
11	SERVER	I16	#	Registered server
12	DATALEN	I16	#	Length of actual data
13	EN_SWITCH	B1	??	Enable switch-over to backup server
14	MAIN_SRV	I16	#	Main server
15	RES_SRV	I16	#	Backup server
16	Act_SRV	Byte	??	Actual server IOS
17	CHANNEL	Byte	??	Transmission channel

Usually, these blocks are not to be configured directly by the user.

According to the selected configuration, the send buffers are preset and transferred to the PLCs by application FIFOCONF.EXE .

3.24 DIS_MSG - PCU message block

General

The block renders it possible to lock out any message initiated by the PCU selectively. The respective message telegrams are then not even entered into the event buffer for the IOS

Parameter sets for block DIS_MSG: Parameterization PCU

DIS_MSG PCU		DB701		Sets: max. 16 per PCU
No.	NAME	TYPE	Preset	Comment
1	SPERR0	B1	??	Message lock user fault incoming
2	SPERR1	B1	??	Message lock user fault outgoing
3	SPERR2	B1	??	Message lock user message incoming
4	SPERR3	B1	??	Message lock user message outgoing
5	SPERR4	B1	??	Message lock ICM-1 fault incoming
6	SPERR5	B1	??	Message lock ICM-1 fault outgoing
7	SPERR6	B1	??	Message lock AIN fault incoming
8	SPERR7	B1	??	Message lock AIN fault outgoing
9	SPERR8	B1	??	Message lock sequence TUE fault
10	SPERR9	B1	??	Message lock SEQS start
11	SPERR10	B1	??	Message lock SEQS parameterizing error
12	SPERR11	B1	??	Message lock PID controller
13	SPERR12	B1	??	Message lock sequence operation messages
14	SPERR14	B1	??	Message lock ICM-2 fault incoming
15	SPERR15	B1	??	Message lock ICM-2 fault outgoing
16	SPERR17	B1	??	Message lock 3-step controller
17	SPERR19	B1	??	Message lock user warning incoming
18	SPERR20	B1	??	Message lock user warning outgoing
19	SPERR21	B1	??	Message lock user operator control message incoming
20	SPERR22	B1	??	Message lock user operator control message outgoing
21	SPERR23	B1	??	Message lock ICM-3 fault incoming
22	SPERR24	B1	??	Message lock ICM-3 fault outgoing
23	SPERR25	B1	??	Message lock ICM-4 fault incoming
24	SPERR26	B1	??	Message lock ICM-4 fault outgoing

whereby parameter: 0/1 = Release/block

3.25 Sequences / TeilAnl - sequence control

With this block it is possible to operate up to 64 sequences (per PCU) simultaneously. In such a case, the instructions and the step enabling conditions, which are stored in basic operations, are processed under the control of the recipes.

Note

Differentiation of the SEQUENCES / TeilAnl blocks

- Up to PCU version **V4.x** the sequence control block is called **TeilAnl**
- From PCU version **V5.x** the sequence control block is called **SEQUENCES**

The names of the following sections are to be assigned accordingly!

This SEQUENCES block includes up to 20 Digital Function Modules (DFMs) plus run time monitoring, which can be configured as time step, forward and backward counter, limit value stage, target value stage, allocators, decoders as mask or target/actual value cells. The respective target or limit values are stored in the recipe lists.

Global data for block SEQUENCES: Parameterization PCU

SEQUENCES PCU		DB 725		Sets: max. 64 per PCU
No.	NAME	TYPE	Preset	Comment
1*	AdaptBF	B1	0	Call Adapt-FC
2*	RezAnf	B1	1	1: SISTAR recipe, 0: BRAUMAT recipe
3	Teilanl_Anz	Byte	64	Unit count
4	Teilanl_DSle n	I16	100	Data set length
5*	Offset	I16	20000	Offset to 1st data record
6*	MaxDS	I16	64	Maximum DS count
7*	OffsRun	I16	100	Offset to runtime copy

* Hidden attributes

Parameter sets for block SEQUENCES - Parameterization PCU

SEQUENCES_PCU		DB 725		Sets: max. 64 per PCU
No.	NAME	TYPE	Preset	Comment
1*	Status	HEXA32	0	Status bits
2*	AtSync	B1	0	Seq. is shown at a sync
3*	AtAlter	B1	0	Seq. is shown as an alternative
4*	AtAlterEx	B1	0	Seq. is shown at an alternative output
5*	AtTrans	B1	0	Seq. is shown at a transition
6*	UserFl	B1	0	User bit for sequence
7*	OpReq	B1	0	Operation request
8*	OpStart	B1	0	Operation start bit

SEQUENCES_PCU		DB 725		Sets: max. 64 per PCU
9*	OpStop	B1	0	Operation stop bit
10*	SeqRun	B1	0	Sequence is running
11*	ReqStrtImp	B1	0	Sequence start impulse
12*	OpTimeErr	B1	0	Fault TUE
13*	RecLoadErr	B1	0	Load recipe error
14*	MsgErrBuf	I8	0	Error message for sequence
15*	MsgProcBuf	B1	0	Process messages for sequence
16*	MsgRCSBuf	B1	0	RCS messages for sequence
17*	StopAtSync	B1	0	Blocking bit for synchronization
18*	NotSeqHeld	B1	0	Step continuing enable/stop
19*	SeqPaused	B1	0	Sequence switched to pause
20*	Comm_Mode	B1	0	IBS mode for the sequence
21	Enable	B1	0	Continuous condition
22	Man_Moded	B1	0	Manual/Automatic operating mode
23*	Occupied	B1	0	Sequence occupied
24*	Internal	HEXA32	0	Internal bits
25*	Tele5_Strt	B1	0	Tele 15: Send batch start
26*	Tele5_End	B1	0	Tele 15: Send batch end
27*	Tele5_Err	B1	0	Tele 15: Send batch error
28*	Tele3_Ima	B1	0	Tele 13: Send image
29*	RecChanged	B1	0	Start recipe for next start
30*	WaitForEOP	B1	0	Wait for EOP processing
31*	Ctrl	HEXA32	0	Control bits
32*	RelT_Supv	B1	0	Release supervising time message
33*	Disable	B1	0	Processing lock
34*	DisProtoc	B1	0	Protocol lock
35*	UserBit	B1	0	User bit
36*	RelTime	B1	0	Time release
37*	LvSyncAlt	B1	0	Quit synch/aging
38*	R_TimeRel	B1	0	Time release via CFC
39*	AdaptBFTA	B1	0	Call Adapt-FC
40*	ReloadDFM	B1	0	Reload target values
41*	SyncReq	B1	0	Sync requests UNIT
42*	R_Holding	B1	0	Request: Hold (int. status)
43*	R_Held	B1	0	Request: Hold
44*	R_Restart	B1	0	Request new start
45*	R_Running	B1	0	Request: Running
46*	R_Pausing	B1	0	Request: Pause (int. status)
47*	R_Paused	B1	0	Request: Pause
48*	R_Abortin	B1	0	Request: Abort (int. status)
49*	R_Aborted	B1	0	Request: Abort
50*	R_Stopping	B1	0	Request: Stopping (int. status)
51*	R_Stopped	B1	0	Request: Stop

SEQUENCES_PCU		DB 725		Sets: max. 64 per PCU
52*	R_Reset	B1	0	Request: Inactive
53*	R_Starting	B1	0	Request: Starting (int. status)
54*	R_Rest_ng	B1	0	Request: New start (int. status)
55*	SeqStat	I8	0	Machine status sequence
56*	ReqLdStat	I8	0	Get machine status for recipe
57	NewStep	I16	0	New step
58	Step	I16	0	Old step
59	ManGroup	I8	0	0 none, 1..64 manual group, >64 MANUAL=1
60*	OpState	I8	0	State BOP operation
61	BA_Year	I8	0	Year for job/batch no.
62	BA_RecType	I8	0	Recipe type
63	BA_RecNo	I16	0	Recipe number
64	BA_ONo	I16	0	Job number
65	BA_BNo	I16	0	Batch number
66*	BA_Name0	HEXA32	0	Batch name length
67*	BA_Name1	HEXA32	0	Batch name 0-3
68*	BA_Name2	HEXA32	0	Batch name 4-7
69*	BA_Name3	HEXA32	0	Batch name 8-11
70*	BA_Name4	HEXA32	0	Batch name 12-15
71	BA_ID	HEXA32	0	Batch ID
72	Step_ID	HEXA32	0	Step ID
73	EOP_No	I16	0	Basic operation number * 10
74*	Start_EOP	HEXA32	0	TOP start time
75	StTime_SP	HEXA32	0	EOP-time target value (sec.)
76	StTime_AV	HEXA32	0	EOP-time actual value (sec.)
77*	Delay_SP	I16	0	Waiting time target value (sec.)
78*	Delay_AV	I16	0	Waiting time actual value (sec.)
79*	RecReq_SP	I8	0	Rez.lade target value (sec.)
80*	RecReq_AV	I8	0	Rez.lade actual value (sec.)
81*	TransNo	I16	0	BOP number of the transition
82*	SyncAltNo	I8	0	Number Sync/Alternative
83*	AltResult	I8	0	Result of the alternative
84*	StepMode	I16	0	Step switching mode
85*	EOPState	I8	0	Status Equipment Operation
86	Time_Rel	Step	U M108.1	Enable supervising time: Query command
87*	Step_Int	HEXA32	8000	Step

* Hidden attributes

Global data for block SEQU: Parameterization PCU

SEQU PCU		DB725		Sets: max. 64 per PCU
No.	NAME	TYPE	Preset	Comment
1*	AdaptBF	B1	0	Call Adapt-FC
2*	RezAnf	B1	1	1: SISTAR recipe, 0: BRAUMAT recipe
3	Teilanl_Anz	Byte	64	Unit count
4	Teilanl_Dslen	Byte	60	Data set length
5*	Offset	I16	300	Offset to 1st data record
6*	MaxDS	I16	64	Maximum DS count
7*	OffsRun	I16	100	Offset to runtime copy

* hidden attributes

Parameter sets for block SEQU: Parameterization PCU

SEQU PCU		DB725		Sets: max. 64 per PCU
No.	NAME	TYPE	Preset	Comment
1*	TF/S	B1	0	Step continuing enable/stop
2*	ATS	B1	0	Sequence process: 0=stop, 1=running
3*	Gsta	B1	0	Basic operation start pulse
4*	GSto	B1	0	Basic operation stop pulse
5*	Tsta	B1	0	Unit start pulse
6*	PSPR	B1	0	Disable step log entry
7*	DBed	B1	0	Continuous condition
8*	Hand	B1	0	Manual mode
9*	Stoe	B1	0	Fault TUE
10*	BedA	B1	0	Operation request
11*	FTue	B1	0	Enable monitoring time
12*	Abbr	B1	0	Unit cancel
13	SPER	B1	0	Working disruption
14*	RhState	I8	0	Get machine status for recipe
15*	RezAend	B1	0	Recipe changed by IOS
16*	SyncVKE1	B1	0	Sync. with VKE1 reached
17*	StoerHol	B1	0	Error get recipe
18*	RezFehl	B1	0	Recipe DX missing
19*	AlterVKE1	B1	0	Alternative achieved with VKE1
20	ESGS	B1	0	Group error ICM
21	AIN	B1	0	Group error AIN
22	ZGEA	B1	0	Additional unit on/off
23*	SchrAlt	I8	0	Old step
24*	SchrNeu	I8	0	New step
25	HZuo	I8	0	Manual group assignment: 0 none, 1..64 manual group, >64 MANUAL=1

SEQU PCU		DB725		Sets: max. 64 per PCU
26*	ZGOP	I8	0	State GOP operation
27*	Jahr	IB	0	Year for order no./batch no.
28	RTYP	I8	0	Recipe type
29*	RezNr	I16	0	Recipe number
30*	AuftrNr.	I16	0	Job number
31*	ChargeNr	I16	0	Batch number
32*	GOPNr	I16	0	Basic operation number * 10
33	GTueS	I32	0	EOP-time target value (sec.)
34	GTueI	I32	0	EOP-time actual value (sec.)
35	WTueS	I16	0	Wait time target value (sec.)
36	WTueI	I16	0	Wait time actual value (sec.)
37*	RTueS	I8	0	Rec.load-TUE target value (sec.)
38*	RTueI	I8	0	Rec.load-TUE actual value (sec.)
39	QBI	STEP	U M 0.0	Enable mon. time: Step 5 query command
40*	Weiter	B1	0	Continue with Sync/Alt/Trans
41*	GopSperr	B1	0	EOP disable in Sync/Old/Trans
42*	Trans	B1	0	Transition active
43*	Tele13	B1	0	Start msg13 unit status
44*	Tele15Sta	B1	0	Start msg15 start batch
45*	Tele15End	B1	0	Start msg15 end batch
46*	Tele15Err	B1	0	Start msg15 error batch
47*	Sync	B1	0	RUP is on sync
48*	Altern	B1	0	RUP is on altern
49*	AltAusg	B1	0	Alternative unit started
50*	TueG	B1	0	Save image TueG
51*	Block	B1	0	Blocking flag deleted by PC
52*	TueTyp	B1	0	Mon. time type 0 = up, 1 = down
53*	TransNr	I16	0	OP no. of transition
54*	AdaptBFTA	B1	0	Call Adapt-FC
55*	SyncAlt	I8	0	Number Sync/Alternative
56*	AltErg	I8	0	Result of alternative
57*	HOLD_Bit	B1	0	Hold flag for EOP
58*	MsgStat	I16	0	Message status
59*	MsgError	B1	0	Error message buffer
60*	MsgProc	B1	0	Process message memory
61*	MsgRCS	B1	0	RCS message memory
62*	SyncReq	B1	0	Sync requests UNIT
63*	ReloadDFM	B1	0	Reload target value
64*	MsgSystem	B1	0	System message memory
65*	MsgWarning	B1	0	Warning message memory
66*	MsgOperating	B1	0	Operating message memory

SEQUENCE/TeilAnl - Text parameterization IOS

SEQU IOS SEQUENCE IOS			Sets: max. 64 per PCU
No.	**Type**	**Preset**	**Comment**
1	Z16	SEQU xx SEQUENCE xx	Block name

Block user FB

To each sequence one FB block (FB 1001 ... FB 1064) is allocated in which the corresponding permanent conditions, interlockings, start instructions, etc. are programmed by the user.

The TA user FB is called up by the system before and after the basic operation. where a flag may be queried to determine whether the block was called before or after.

A	FBGO;	// after BOP
JC	NGOP;	
	...	// before BOP processing
	BEU;	
NGOP:	...	// after BOP processing

Use of the address register AR1 and AR2

If the address register is used in the user program you must ensure that it is backed up before each change and then restored:

Definition of the local variables:

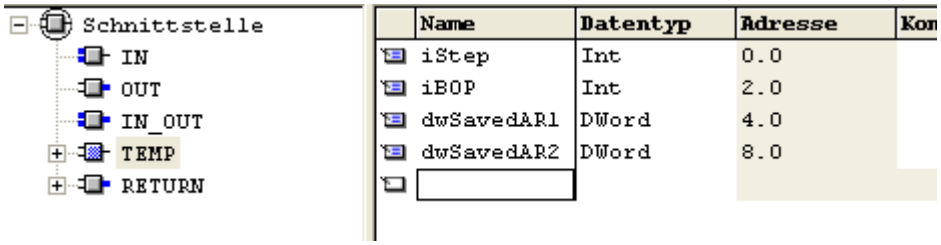

. . .

. . .

... before use or block start

```
TAR1 dwSavedAR1
TAR2 dwSavedAR2
```

. . .

. . .

... after use or at block end / before sys start

```
LAR1 dwSavedAR1
LAR2 dwSavedAR2
...
```

Flag interfaces between sequence control and TA user FB or BOP FC

The following displays (flags) can be analyzed in...

1. TA-user-FB FB1001 ... FB1064
2. BOP FC1001 ... 1999

.

These flags are equal for all sequences, which means they are valid only in the programs and sub-programs which are called from sequence control (local validity). A query in a program that runs e.g. inside OB1 delivers the undefined result.

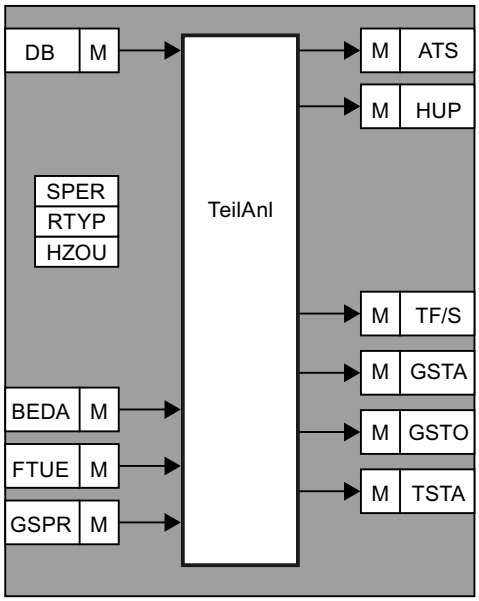

For flag access by sequence user FBs and basic operation FCs there are distinct restrictions which are shown in the following table.

S : One-time setting
R : One-time reset
= : Permanent setting
T : Transfer command
A : Read access
- : Irrelevant

Symbol	Function	Operand	Possible access type in user FB or BOP
HUP	Hooter operation is activated at the end of the monitoring time (TUE). Processing and resetting by user.	M 99.4	R A
HUPS	Hooter operation group flag is activated in the event of an ICM, AIN, MSG and SEQU(TUE) error, processing and resetting by user	M 107.1	R A
TA_ ALTER_MB	Result of alternatives **(until Version V4.6 !)** A basic operation (= alternative producer) delivers the numerical value of the selected alternative (1...255). Value 0 is not allowed.	MB 100	T
TUET	Monitoring time (TUE) sequence Result bit of supervising time of sequence. 0/1 = time not elapsed/time elapsed	M 101.0	A
TVERZ	When a BOP is started, the wait/delay time is started. Time running: TVERZ = 0 Time expired: TVERZ = 1 The time is restarted at signal change TF/S from 0 to 1 (display from "-"/STOP to "+"/ENABLED)	M 101.1	A
SRDR	Triggers automatic printing of the step protocols. When the basic operation is initiated, SRDR is always = 0..	M 101.2	S, R, =
FBGO	Flag for sequence FB: FBGO = 0: FB called before the basic operation is processed Only DFM processing applies here! FBGO = 1: FB called after the basic operation is processed	M 101.4	A (only in PS user FB)
ZGEA	Add-on unit on/off Two function keys (Shift-F2 or Shift-F3 (off/on)) in the plant overview control flag M 101.5. In turn, this can be used to control an add-on unit in the basic operation or in the sequence.	M 101.5	A (normal) S, R, =

Symbol	Function	Operand	Possible access type in user FB or BOP
BEDA	OPEration Order If BEDA = 1, the operation order is displayed in the sequence overview and in the process image. Set by user program; reset via operation. When the basic operation is started, the sequence control sets BEDA=0.	M 101.6	S (BOP start) A (as transition)
FTUE	Release monitoring time (TUE) The sequence control always sets this flag to 1. It can be reset by the user program (BOP). • FTUE=**1**: If the EOP-time actual value is exceeded, the sequence control signals a **fault** (display+message) • FTUE=**0**: If the EOP-time actual value is undershot, the sequence control **does not signal a fault**.	M 101.7	S, R, =

Other flag bits ...:

Symbol	Function	Operand	Possible access type in user FB or BOP
TF/S	Sequence release/stop When TF/S=1, the sequence control switches to the next step if the step enabling condition is fulfilled: Transition enable. If TF/S=0, the control does not switch to the next step even if the step enabling condition is met.	M 102.0	S, R, =
ATS	Operation sequence working	M 102.1	A
GSTA	Basic operation STArt indicates whether the actual basic operation is processed for the first time 0/1 = no/yes	M 102.2	A
GSTO	Basic operation STOp indicates whether the actual basic operation is processed for the last time 0/1 = no/yes	M 102.3	A
TSTA	Sequence STArt 1-Impulse at time of first processing of the sequence	M 102.4	A

Symbol	Function	Operand	Possible access type in user FB or BOP
PSPR	Report Entry Interlock PSPR=1 prevents an entry being made in the report at the end of the basic operation. When the basic operation is started, the sequence control sets PSPR=0.	M 102.5	S
DB	Permanent Conditions Display Always RLO = 1 when sequence is working	M 102.6	-
HAND	Manual mode Flag is activated when sequence is in operation mode MANUAL.	M 102.7	A (normal) If HZUO=0: S, R, =

Flag interface between sequence instance and TA user FB

The sequence control has the following globally defined flags per sequence:

DB flag	Continuous condition is generated in the sequence user FB. =0 means that the sequence cannot be started	M 640.0 - M 647.7	Controlled by user program Evaluated by system
ATS	Operation sequence start Is shown by the sequence control =1 means that the associated sequence is running If the sequence is in step=0, then "ATS"=0	M 656.0 - M 663.7	Controlled by system Evaluated by user program

This table shows how the global flag bits are assigned to the sequences.

No.	DB	ATS	No.	DB	ATS
Sequence	Continuous condition	Sequence	Sequence	Continuous condition	Sequence
		Sequence start			Sequence start
1	M 640.0	M 656.0	33	M 644.0	M 660.0
2	M 640.1	M 656.1	34	M 644.1	M 660.1
3	M 640.2	M 656.2	35	M 644.2	M 660.2
4	M 640.3	M 656.3	36	M 644.3	M 660.3
5	M 640.4	M 656.4	37	M 644.4	M 660.4
6	M 640.5	M 656.5	38	M 644.5	M 660.5
7	M 640.6	M 656.6	39	M 644.6	M 660.6
8	M 640.7	M 656.7	40	M 644.7	M 660.7
9	M 641.0	M 657.0	41	M 645.0	M 661.0
10	M 641.1	M 657.1	42	M 645.1	M 661.1
11	M 641.2	M 657.2	43	M 645.2	M 661.2
12	M 641.3	M 657.3	44	M 645.3	M 661.3
13	M 641.4	M 657.4	45	M 645.4	M 661.4

No.	DB	ATS	No.	DB	ATS
Sequence	Continuous condition	Sequence	Sequence	Continuous condition	Sequence
		Sequence start			Sequence start
14	M 641.5	M 657.5	46	M 645.5	M 661.5
15	M 641.6	M 657.6	47	M 645.6	M 661.6
16	M 641.7	M 657.7	48	M 645.7	M 661.7
17	M 642.0	M 658.0	49	M 646.0	M 662.0
18	M 642.1	M 658.1	50	M 646.1	M 662.1
19	M 642.2	M 658.2	51	M 646.2	M 662.2
20	M 642.3	M 658.3	52	M 646.3	M 662.3
21	M 642.4	M 658.4	53	M 646.4	M 662.4
22	M 642.5	M 658.5	54	M 646.5	M 662.5
23	M 642.6	M 658.6	55	M 646.6	M 662.6
24	M 642.7	M 658.7	56	M 646.7	M 662.7
25	M 643.0	M 659.0	57	M 647.0	M 663.0
26	M 643.1	M 659.1	58	M 647.1	M 663.1
27	M 643.2	M 659.2	59	M 647.2	M 663.2
28	M 643.3	M 659.3	60	M 647.3	M 663.3
29	M 643.4	M 656.4	61	M 647.4	M 663.4
30	M 643.5	M 659.5	62	M 647.5	M 663.5
31	M 643.6	M 659.6	63	M 647.6	M 663.6
32	M 643.7	M 659.7	64	M 647.7	M 663.7

Standard mapping between sequence control and flag interface

The sequence control does not access the global flags directly, but takes them from interface blocks, which are allocated by the functions FC 700/FC 701.

If the global flags should be located at another place, the user programmer has to change the function blocks accordingly.

- DB612 Sequence permanent condition
- DB613 Sequence start (ATS)

DB612, DB613	
DBB10	Sequence 8 ... 1
DBB11	Sequence 16 ... 9
DBB12	Sequence 24 ... 17
DBB17	Sequence 64 ... 57

Sequence - Function description

Starting a sequence:

Starting a sequence can be carried out by the following methods:

- Recipe system (synchronization, alternatives), start conditions: step=0, Automatic mode: TF/S=1
- SEQS operation start block, start condition: step=0, Automatic mode

From the IOS by steering the step register; recipe, batch and job numbers have eventually to be set before.

For all start methods, it is a prerequisite that the permanent condition be fulfilled.

Step operation:

From the IOS display, every step of a sequence can be activated independently of the step enabling conditions by setting the step from 0 to n (n=1...). If the selected step is accompanied by an alternative or synchronization, then the sequence control does not run a basic operation and column "basic operation" of the according sequence from the "plant section overview" is empty.

Manual mode:

(BTR indication H/A on IOS display):

The signal Manual mode indicates switching to the manual control level.

In Manual mode, the step enabling of the sequence is locked.

The signal Manual mode is given directly from the block HAND "Manual signal distributor“. Therefore, each sequence is assigned to a manual group via the parameter HZU0.

Release/Stop - Control:

(BTR indication "+/-" on IOS display): By switching the rel./stop control bit to the stop state (BTR indication on the IOS display "-") the step enabling of a sequence can be blocked even if the step enabling conditions are fulfilled. Further, the participating synchronizations and alternatives are blocked.

Abort of a sequence:

The processing of a sequence is aborted when the permanent condition is not given (DB = "0") or when step 0 is given.

Monitoring time sequence TUET:

(ANZ indicator S, flashing on data backup device when addressing the monitoring): The individual sequence steps are monitored over time.

At the end of the runtime of the step (M101.0=1) given via the recipe list with released runtime monitoring (flag M 101.7=1) the error indication (S) is displayed flashing on the data display; hooter operation is activated (M 99.4) and the message "ERROR MONITORING TIME START" is printed if sequence messages are enabled.

Sequence control ignores the runtime monitoring, if the control bit FTUE (M101.7) in the basic operation is not activated.

Delay/Wait time TVERZ:

When a basic operation is started, a second time (the wait/delay time) is initiated which is the same for all steps and is given by parameter WTueS at parameterization.

The flag TVERZ (M 101.1) may be interpreted in the BOP as follows:

Time running: TVERZ = 0

Time expired: TVERZ = 1

The time is restarted at signal change TF/S from 0 to 1 (display from "-"/STOP to "+"/ENABLED)

Operation order BEDA

for a sequence indication B (flashing) on the IOS display:
By setting the control bit BEDA (M 101.6) in the basic operation, a user order can be signaled via the IOS display (e.g. test sampling). The operator can acknowledge the order in the plant overview by means of the function key B-QUIT, thus resetting the BEDA control bit.

Report interlocking PSPR:

By setting the control bit PSPR (M 102.5) in the basic operation the entry of the processed basic operation in the report can be blocked.

Add-on unit on/off ZGEA:

By combining the flag M 101.5 in the basic operation or in the program sequence with an ICM, a higher level output or something similar, an add-on unit can be switched on or off in the plant overview via two function keys (ON/OFF).

Processing operation:

After starting the sequence, the data for processing the actual step is read from the recipe list indicated in the sort number and the indicated basic operation is loaded. At the start of a step (start basic operation), the target values for the DFMs are given (processing of the basic operations: see Programming basic operations).

With fulfilled step enabling conditions (RLO = "1"), when returning from processing the basic operation, Automatic mode (A+) and operation enabled (+) the next step from the recipe list is processed. After processing all steps from the recipe list the system returns automatically to step 0 and the processing of the sequence is finished.

In the actual recipe all parameters can be changed during processing. The insertion and deletion of complete parts of recipes stays blocked, however, and is only released when the sequence has returned to step 0.

Recipes:

DB501	Sequence 1
.....	
DB564	Sequence 64

Sequence programs:

FB 1001 Sequence 1
.....
FB 1064 Sequence 64

Before and after the processing of a sequence, an FB <1000+n> (n = sequence number) is called (program sequence).

On processing the FB before GOP, the flag M101.4 is set to "0" and after GOP, flag M101.4 is set to "1";

Call	Functions
FB before GOP:	Designing the continuous condition Calls for DFM operation Manipulations before BOP processing (e.g. at multiplex BOPs)
FB after GOP:	Manipulations after BOP processing Step manipulations (jump forward/backward)

Step 0 only operates DFM blocks that are programmed outside the basic operations.

Manual mode:

Target values can be given via the screen or user program, or else prior values are maintained.

Basic operations: 999 per PCU: FC 1001...1999

3.26 TIMER - switch-on delay/impulse

With this block 1024 additional switch-on delay timers are provided. The timers are divided into two groups (512 timers per group). Each timer may be used as a switch-on delay or impulse.

The arrangement of the start input and two outputs for pos. and neg. impulses to the flag interface is done according to the following tables.

The timer is started by a positive edge (signal 0->1) of the start input with the time given by parameter TimeValPos and with the mode given by parameter TimeType. The state of the timer is assigned to the output (parameter OutPos) according to the S7 command SD/SP.

A negative edge at the start input (signal 1=>0) starts the timer as a switch-on delay (parameter TimeValNeg) or as an impulse (parameter TimeType). The state of the timer is assigned to the output (parameter OutNeg) according to the S7 command SD/SP.

CAUTION

Group 2 timers are disabled by default. Before you can use them, you need to enable them in the PCU scheduler. To do this, set the "Disable" flag of the three SCHEDULE data sets that are numbered from 58 to 60 (TIMER_02 xxx) to 0. Please make sure that all three data sets have been activated.

Global data for TIMER block - PCU parameterization

TIMER 1/2 PCU		DB 724/745		Sets: max. ?? per PCU
No.	NAME	TYPE	Preset	Comment
1	Act	I16	1	Timer count

* hidden attributes

Parameter sets for block TIMER : Parameterization PCU

TIMER 01/02 PCU		DB 724/745		Sets: max. 512 per PCU
No.	NAME	TYPE Info	Preset	Comment
1	TimeValPos	I16 P S	5	Time set value pos. impulse in sec.
2	TimeValNeg	I16 P S	5	Time set value neg. impulse in sec.
3	TimeType	B1 P S	0	Timer: 0 = SE / 1 = SI
4	In	B1 P S	0	Start input
5	OutPos	B1 S	0	Output pos. impulse
6	OutNeg	B1 S	1	Output neg. impulse
7	TimeVal	I16 S	0	Actual time value
8*	TypFlag	B1	0	Copy of type
9*	Sim	B1	0	Simulate input
10*	InvNegOut	B1	0	Invert negative output
11*	InvPosOut	B1	0	Invert positive output
12*	STAT	I16	0	Status

Parameter set: Text parameterization IOS

TIMER IOS			Sets: max. 512 per PCU
No.	Type Info	Preset	Comment
1	Z16 P IOS	TIMER xxx	Switch-on delay, impulse

User interface to block TIMER 1 TIMER 1 ... 256

Bit address									In	Outpos	Outneg
	0	1	2	3	4	5	6	7	(MB)	(MB)	(MB)
	1	2	3	4	5	6	7	8	1240	1304	1368
	9	10	11	12	13	14	15	16	1241	1305	1369
	17	18	19	20	21	22	23	24	1242	1306	1370
	25	26	27	28	29	30	31	32	1243	1307	1371
	33	34	35	36	37	38	39	40	1244	1308	1372
	41	42	43	44	45	46	47	48	1245	1309	1373
	49	50	51	52	53	54	55	56	1246	1310	1374

Bit address									In	Outpos	Outneg
	57	58	59	60	61	62	63	64	1247	1311	1375
	65	66	67	68	69	70	71	72	1248	1312	1376
	73	74	75	76	77	78	79	80	1249	1313	1377
T	81	82	83	84	85	86	87	88	1250	1314	1378
I	89	90	91	92	93	94	95	96	1251	1315	1379
M	97	98	99	100	101	102	103	104	1252	1316	1380
E	105	106	107	108	109	110	111	112	1253	1317	1381
R	113	114	115	116	117	118	119	120	1254	1318	1382
	121	122	123	124	125	126	127	128	1255	1319	1383
N	129	130	131	132	133	134	135	136	1256	1320	1384
U	137	138	139	140	141	142	143	144	1257	1321	1385
M	145	146	147	148	149	150	151	152	1258	1322	1386
B	153	154	155	156	157	158	159	160	1259	1323	1387
E	161	162	163	164	165	166	167	168	1260	1324	1388
R	169	170	171	172	173	174	175	176	1261	1325	1389
	177	178	179	180	181	182	183	184	1262	1326	1390
	185	186	187	188	189	190	191	192	1263	1327	1391
	193	194	195	196	197	198	199	200	1264	1328	1392
	201	202	203	204	205	206	207	208	1265	1329	1393
	209	210	211	212	213	214	215	216	1266	1330	1394
	217	218	219	220	221	222	223	224	1267	1331	1395
	225	226	227	228	229	230	231	232	1268	1332	1396
	233	234	235	236	237	238	239	240	1269	1333	1397
	241	242	243	244	245	246	247	248	1270	1334	1398
	249	250	251	252	253	254	255	256	1271	1335	1399

Determining the signals:

Search Timer in left table field

- in the same row of the right table field, the byte addresses for the flags are located.
- The column headline assigned to Timer determines the bit address

User interface to block TIMER 1 TIMER 257 ... 512

Bit address									In	OutPos	OutNeg
	0	1	2	3	4	5	6	7	(MB)	(MB)	(MB)
	257	258	259	260	261	262	263	264	1272	1336	1400
	265	266	267	268	269	270	271	272	1273	1337	1401
	273	274	275	276	277	278	279	280	1274	1338	1402
	281	282	283	284	285	286	287	288	1275	1339	1403
	289	290	291	292	293	294	295	296	1276	1340	1404
	297	298	299	300	301	302	303	304	1277	1341	1405
	305	306	307	308	309	310	311	312	1278	1342	1406

Bit address									In	OutPos	OutNeg
	313	314	315	316	317	318	319	320	1279	1343	1407
	321	322	323	324	325	326	327	328	1280	1344	1408
	329	330	331	332	333	334	335	336	1281	1345	1409
T	337	338	339	340	341	342	343	344	1282	1346	1410
I	345	346	347	348	349	350	351	352	1283	1347	1411
M	353	354	355	356	357	358	359	360	1284	1348	1412
E	361	362	363	364	365	366	367	368	1285	1349	1413
R	369	370	371	372	373	374	375	376	1286	1350	1414
	377	378	379	380	381	382	383	384	1287	1351	1415
N	385	386	387	388	389	390	391	392	1288	1352	1416
U	393	394	395	396	397	398	399	400	1289	1353	1417
M	401	402	403	404	405	406	407	408	1290	1354	1418
B	409	410	411	412	413	414	415	416	1291	1355	1419
E	417	418	419	420	421	422	423	424	1292	1356	1420
R	425	426	426	428	429	430	431	432	1293	1357	1421
	433	434	435	436	437	438	439	440	1294	1358	1422
	441	442	443	444	445	446	447	448	1295	1359	1423
	449	450	451	452	453	454	455	456	1296	1360	1424
	457	458	459	460	461	462	463	464	1297	1361	1425
	465	466	467	468	469	470	471	472	1298	1362	1426
	473	474	475	476	477	478	479	480	1299	1363	1427
	481	482	483	484	485	486	487	488	1300	1364	1428
	489	490	491	492	493	494	495	496	1301	1365	1429
	497	498	499	500	501	502	503	504	1302	1366	1430
	505	506	507	508	509	510	511	512	1303	1367	1431

User interface to block TIMER 2: TIMER 513...768

Bit address									In	Outpos	Outneg
	0	1	2	3	4	5	6	7	(MB)	(MB)	(MB)
	513	514	515	516	517	518	519	520	1432	1496	1560
	521	522	523	524	525	526	527	528	1433	1497	1561
	529	530	531	532	533	534	535	536	1434	1498	1562
	537	538	539	540	541	542	543	544	1435	1499	1563
	545	546	547	548	549	550	551	552	1436	1500	1564
	553	554	555	556	557	558	559	560	1437	1501	1565
	561	562	563	564	565	566	567	568	1438	1502	1566
	569	570	571	572	573	574	575	576	1439	1503	1567
	577	578	579	580	581	582	583	584	1440	1504	1568
	585	586	587	588	589	590	591	592	1441	1505	1569
T	593	594	595	596	597	598	599	600	1442	1506	1570
I	601	602	603	604	605	606	607	608	1443	1507	1571
M	609	610	611	612	613	614	615	616	1444	1508	1572

Bit address									In	Outpos	Outneg
E	617	618	619	620	621	622	623	624	1445	1509	1573
R	625	626	627	628	629	630	631	632	1446	1510	1574
	633	634	635	636	637	638	639	640	1447	1511	1574
N	641	642	643	644	645	646	647	648	1448	1512	1575
U	649	650	651	652	653	654	655	656	1449	1513	1576
M	657	658	659	660	661	662	663	664	1450	1514	1576
B	665	666	667	668	669	670	671	672	1451	1515	1577
E	673	674	675	676	677	678	679	680	1452	1516	1578
R	681	682	683	684	685	686	687	688	1453	1517	1579
	689	690	691	692	693	694	695	696	1454	1518	1580
	697	698	699	700	701	702	703	704	1455	1519	1581
	705	706	707	708	709	710	711	712	1456	1520	1582
	713	714	715	716	717	718	719	720	1457	1521	1583
	721	722	723	724	725	726	727	728	1458	1522	1584
	729	730	731	732	733	734	735	736	1459	1523	1585
	737	738	739	740	741	742	743	744	1460	1524	1586
	745	746	747	748	749	750	751	752	1461	1525	1587
	753	754	755	756	757	758	759	760	1462	1526	1588
	761	762	763	764	765	766	767	768	1463	1527	1589

User interface to block TIMER 2 Timer 769 ... 1024

Bit address									In	OutPos	OutNeg
	0	1	2	3	4	5	6	7	(MB)	(MB)	(MB)
	769	770	771	772	773	774	775	776	1464	1528	1590
	777	778	779	780	781	782	783	784	1465	1529	1591
	785	786	787	788	789	790	791	792	1466	1530	1592
	793	794	795	796	797	798	799	800	1467	1531	1593
	801	802	803	804	805	806	807	808	1468	1532	1594
	809	810	811	812	813	814	815	816	1469	1533	1595
	817	818	819	820	821	822	823	824	1470	1534	1596
	825	826	827	828	829	830	831	832	1471	1535	1597
	833	834	835	836	837	838	839	840	1472	1536	1598
	841	842	843	844	845	846	847	848	1473	1537	1599
T	849	850	851	852	853	854	855	856	1474	1538	1600
I	857	858	859	860	861	862	863	864	1475	1539	1601
M	865	866	867	868	869	870	871	872	1476	1540	1602
E	873	874	875	876	877	878	879	880	1477	1541	1603
R	881	882	883	884	885	886	887	888	1478	1542	1604
	889	890	891	892	893	894	895	896	1479	1543	1605
N	897	898	899	900	901	902	903	904	1480	1544	1606
U	905	906	907	908	909	910	911	912	1481	1545	1607
M	913	914	915	916	917	918	919	920	1482	1546	1608

Bit address									In	OutPos	OutNeg
B	921	922	923	924	925	926	927	928	1483	1547	1609
E	929	930	931	932	933	934	935	936	1484	1548	1610
R	937	938	939	940	941	942	943	944	1485	1549	1611
	945	946	947	948	949	950	951	952	1486	1550	1612
	953	954	955	956	957	958	959	960	1487	1551	1613
	961	962	963	964	965	966	967	968	1488	1552	1614
	969	970	971	972	973	974	975	976	1489	1553	1615
	977	978	979	980	981	982	983	984	1490	1554	1616
	985	986	987	988	989	990	991	992	1491	1555	1617
	993	994	995	996	997	998	999	1000	1492	1556	1618
	1001	1002	1003	1004	1005	1006	1007	1008	1493	1557	1619
	1009	1010	1011	1012	1013	1014	1015	1016	1494	1558	1620
	1017	1018	1019	1020	1021	1022	1023	1024	1495	1559	1621

3.27 ZTG - Central clock

The central clock generator creates static and dynamic time clock signals as well as a defined "0" signal and generates a new start pulse at system start-up.

The pulse duty factor of the static time clocks is 1:1. The chronological indications are related to the duration of the "1" signal. The dynamic time clocks are active for one cycle. The block runs in the OB1.

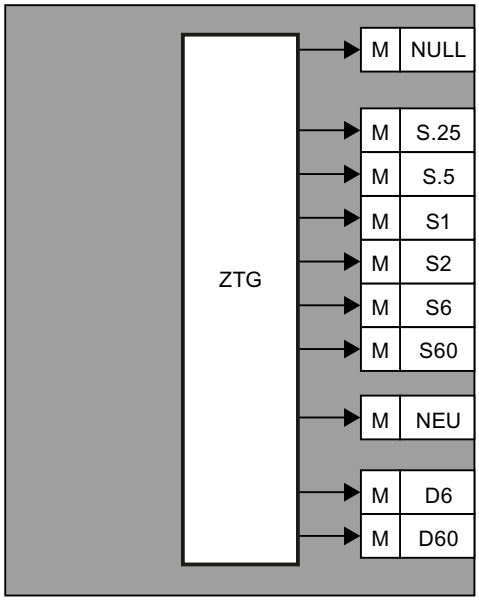

Process interface

NULL	Linking result "ZERO"	M 97.0	LOG0	Defined RLO = "0"		M 98.0 (*)
S.25	Static 00.25 seconds clock	M 97.1	D25	Dyn. 0.25SEC	PULSE / 4 Hz	M 98.1 (*)
S.5	Static 00.50 seconds clock	M 97.2	D5	Dyn. 0.5 SEC	PULSE / 2 Hz	M 98.2 (*)
S1	Static 01.00 seconds clock	M 97.3	D1	Dyn. 1 SEC	PULSE / 1 Hz	M 98.3 (*)
S2	Static 02.00 seconds clock	M 97.4	D2	Dyn. 2 SEC	PULSE / 0.5 Hz	M 98.4 (*)
S6	Static 06.00 seconds clock	M 97.5	D6	Dyn. 6 SEC	PULSE	M 98.5 (*)
S60	Static 60.00 seconds clock	M 97.6	D60	Dyn. 60 SEC	PULSE	M 98.6 (*)
NEW	NEWStart pulse	M 97.7	D15	Dyn. 15 SEC	PULSE	M 98.7 (*)
D6	Dynamic 06.00 seconds clock	M 107.5				
D60	Dynamic 60.00 seconds clock	M 107.6				

(*) Flags only valid for queries in OB 1

3.28 ZYKLMESS - Measuring of cycle time

With this block, the time values of the OB1 cycle as well as for the distinct time slices of the time slice distributor are entered in OB35.

On enabling the block, measuring continues as long as the block is disabled again.

Parameter sets for block ZYKLMESS: Parameterization PCU

ZYKLMESS PCU		DB700		Sets: max. 16 per PCU
No.	NAME	TYPE	Preset	Comment
1	Freig	B1	??	Measuring: 1=enable, 0=disable
2	OB1ZycA	I16	#	OB1 actual cycle time
3*	OB1ZykD	I16	#	OB1 average cycle time
4*	OB1ZykM	I16	#	OB1 maximum cycle time
5*	ZSUEBERL1	B1	??	Flag bit time slice overflow ZS1
6*	ZSUEBERL2	B1	??	Flag bit time slice overflow ZS2
7*	ZSUEBERL3	B1	??	Flag bit time slice overflow ZS3
8*	ZSUEBERL4	B1	??	Flag bit time slice overflow ZS4
9*	ZSUEBERL5	B1	??	Flag bit time slice overflow ZS5
10*	ZSUEBERL6	B1	??	Flag bit time slice overflow ZS6
11*	ZSUEBERL7	B1	??	Flag bit time slice overflow ZS7

ZYKLMESS PCU		DB700		Sets: max. 16 per PCU
12*	ZSUEBERL8	B1	??	Flag bit time slice overflow ZS8
13*	ZSUEBERL9	B1	??	Flag bit time slice overflow ZS9
14*	ZSUEBERL10	B1	??	Flag bit time slice overflow ZS10
15	OB35Zs1A	I16	#	OB35 time slice 1 actual cycle time
16	OB35Zs2A	I16	#	OB35 time slice 2 actual cycle time
17	OB35Zs3A	I16	#	OB35 time slice 3 actual cycle time
18	OB35Zs4A	I16	#	OB35 time slice 4 actual cycle time
19	OB35Zs5A	I16	#	OB35 time slice 5 actual cycle time
20	OB35Zs6A	I16	#	OB35 time slice 6 actual cycle time
21	OB35Zs7A	I16	#	OB35 time slice 7 actual cycle time
22	OB35Zs8A	I16	#	OB35 time slice 8 actual cycle time
23	OB35Zs9A	I16	#	OB35 time slice 9 actual cycle time
24	OB35Zs10A	I16	#	OB35 time slice 10 actual cycle time
25*	OB35Zs1M	I16	#	OB35 time slice 1 maximum cycle time
26*	OB35Zs2M	I16	#	OB35 time slice 2 maximum cycle time
27*	OB35Zs3M	I16	#	OB35 time slice 3 maximum cycle time
28*	OB35Zs4M	I16	#	OB35 time slice 4 maximum cycle time
29*	OB35Zs5M	I16	#	OB35 time slice 5 maximum cycle time
30*	OB35Zs6M	I16	#	OB35 time slice 6 maximum cycle time
31*	OB35Zs7M	I16	#	OB35 time slice 7 maximum cycle time
32*	OB35Zs8M	I16	#	OB35 time slice 8 maximum cycle time
33*	OB35Zs9M	I16	#	OB35 time slice 9 maximum cycle time
34*	OB35Zs10M	I16	#	OB35 time slice 10 maximum cycle time

* hidden attributes

3.29 VMON – Value monitoring

The function block VMON (value monitoring) is able to carry out up to 256 target/actual value comparisons.

The comparative target and actual values are taken by combination from another element (FIXV, AIN, MULT, PID, POLY, SEQU).

The block is disabled by default.

Activation for the first time:

The block VMON (FB750) should be called from the scheduler. The activation may be done in class "Schedule <Schedule List>" in data record 54 or 60 with the "Configuration" and the "DB editor" applications (see table).

TimeSlice	Byte	9	Do not change
Disable	B1	0	**Notice:** Set "Disable" at last via app. "Configuration"
IsFC	B1	0	
FB_FC	I16	750	Enter with app. DB editor
Datablock	I16	750	Enter with app. DB editor
Parameter	Hexa	0	Cannot be changed
Used Time	I16	0	Cannot be changed

With that configuration, FB750 is called within 1 sec. cycle.

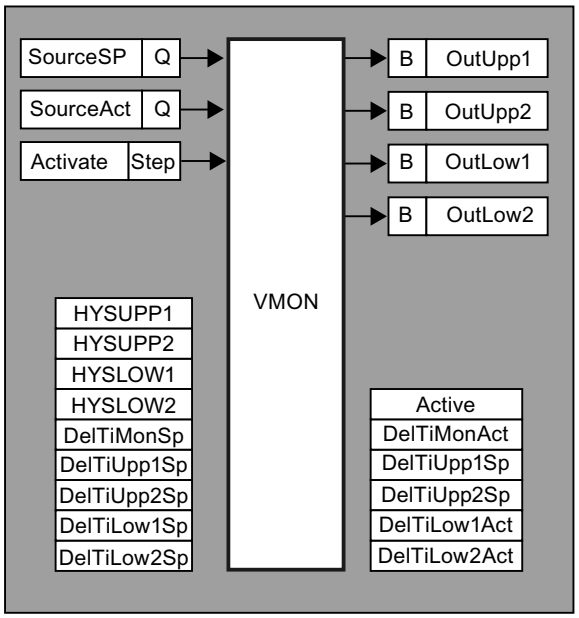

Per actual value, two hysteresis boundaries can be defined for the upper and lower band. For these, a delay time (in sec) can be parameterized in each case. For the activation of the check, a delay time (sec) keeps on being possible.

When the activation time has elapsed and the actual value has crossed a boundary value for the parameterized period, the corresponding flag bit (DelTixxxAct) is set in the data record. The user may evaluate these bits.

One parameter set is assigned to each target/actual value comparison.

Parameter set:	Parameterization VMON PCU
	Text parameterization VMON IOS
Process interface:	Result bit – VMON, DB750, DelTixxxAct
User interface:	Result bit – VMON, DB750, DelTixxxAct
	Parameter sets for block VMON

Parameter set: Parameterization PCU

VMON PCU		DB750		Sets: max. 256 per PCU
No.	NAME	TYPE Info	Preset	Comment
1	Setp	I16 P S	0	Target value Low-Word
2	Setp_DINT	I32 P S	0	Target value double integer
3	Actual	I16 P S	0	Actual value Low-Word
4	Actual_DINT	I32 P S	0	Actual value double integer
5	HYSUPP1	I16 P S	10	Hysteresis upper limit 1
6	HYSUPP2	I16 P S	20	Hysteresis upper limit 2
7	HYSLOW1	I16 P S	10	Hysteresis lower limit 1
8	HYSLOW2	I16 P S	20	Hysteresis lower limit 2
9	DelTiMonSp	I16 P S	10	Target value delay time for monitoring
10	DelTiMonAct	I16 P S	0	Actual value delay time for monitoring
11	DelTiUpp1Sp	I16 P S	10	Target value delay time for upper limit 1
12	DelTiUpp1Act	I16 P S	0	Actual value delay time for upper limit 1
13	DelTiUpp2Sp	I16 P S	10	Target value delay time for upper limit 2
14	DelTiUpp2Act	I16 P S	0	Actual value delay time for upper limit 2
15	DelTiLow1Sp	I16 P S	10	Target value delay time for lower limit 1
16	DelTiLow1Act	I16 P S	0	Actual value delay time for lower limit 1
17	DelTiLow2Sp	I16 P S	10	Target value delay time for lower limit 2
18	DelTiLow2Act	I16 P S	0	Actual value delay time for lower limit 2
19	OutUpp1	B1 P S	0	Actual value > Upper limit 1
20	OutUpp2	B1 P S	0	Actual value > Upper limit 2
21	OutLow1	B1 P S	0	Actual value < Lower limit 1
22	OutLow2	B1 P S	0	Actual value < Lower limit 2
23	Active	B1 P S	0	Monitoring enabled
24	SourceSP	Quell P S	#	Source target value
25	SourceAct	Quell P S	#	Source actual value
26	Activate	Step P S	UM108.1	Enable monitoring

Parameter set: Text parameterization IOS

VMON IOS			Sets: max. 256 per PCU
No.	Type Info	Preset	Comment
1	Z16 P IOS	VMON xxx	Block name