SIEMENS

Application description • 1/2018

Reading and Writing RFID Data with SIMATIC S7-1200 and SIMATIC RF160C via PROFIBUS DP

SIMATIC RF160C, STEP 7 V14

https://support.industry.siemens.com/cs/ww/en/view/63969277

Warranty and liability

Note

The Application Examples are not binding and do not claim to be complete regarding the circuits shown, equipping and any eventuality. The Application Examples do not represent customer-specific solutions. They are only intended to provide support for typical applications. You are responsible for ensuring that the described products are used correctly. These application examples do not relieve you of the responsibility to use safe practices in application, installation, operation and maintenance. When using these Application Examples, you recognize that we cannot be made liable for any damage/claims beyond the liability clause described. We reserve the right to make changes to these Application Examples at any time without prior notice.
If there are any deviations between the recommendations provided in these application examples and other Siemens publications − e.g. Catalogs − the contents of the other documents have priority.

We do not accept any liability for the information contained in this document.

Any claims against us – based on whatever legal reason – resulting from the use of the examples, information, programs, engineering and performance data etc., described in this Application Example shall be excluded. Such an exclusion shall not apply in the case of mandatory liability, e.g. under the German Product Liability Act (“Produkthaftungsgesetz”), in case of intent, gross negligence, or injury of life, body or health, guarantee for the quality of a product, fraudulent concealment of a deficiency or breach of a condition which goes to the root of the contract (“wesentliche Vertragspflichten”). The damages for a breach of a substantial contractual obligation are, however, limited to the foreseeable damage, typical for the type of contract, except in the event of intent or gross negligence or injury to life, body or health. The above provisions do not imply a change of the burden of proof to your detriment.

Copyright © Siemens AG 2012 All rights reserved

Any form of duplication or distribution of these Application Examples or excerpts hereof is prohibited without the expressed consent of Siemens Industry Sector.

Caution
The functions and solutions described in this article confine themselves to the realization of the automation task predominantly. Please take into account furthermore that corresponding protective measures have to be taken up in the context of Industrial Security when connecting your equipment to other parts of the plant, the enterprise network or the Internet. Further information can be found under the Item-ID 50203404.

http://support.automation.siemens.com/WW/view/en/50203404

Table of contents

Warranty and liability **2**

1 Task **4**

2 Solution **6**

2.1 Overview 6
2.2 Description of the core functionality 7
2.3 Hardware and software components used 10
2.4 Performance data 11

3 Function Mechanisms of this Application **12**

3.1 Functionality of the application example 12
3.1.1 Reset the RF160C communication module 12
3.1.2 Read RFID data from transponder 13
3.1.3 Write RFID data to transponder 14
3.2 Description of the STEP 7 V14 project 15
3.2.1 Overview 15
3.2.2 Startup program (OB100) 15
3.2.3 Standard user program (OB1) 16
3.2.4 FB RF160C_RW parameters 17
3.2.5 Call example: FB RF160C_RW (FB160) in OB1 18
3.2.6 Global data block: RF_PARAMETER (DB1) 19
3.2.7 Configuration and project engineering of the SIMATIC Panel 20
3.3 Error and status display 23
3.3.1 Error messages of the FB RF160C_RW (FB160) function block and the function blocks of the library 23
3.3.2 Error messages of the RF160C or connected readers 23

4 Installation and Commissioning **24**

4.1 Hardware configuration 24
4.1.1 Hardware configuration of the S7 station 25
4.1.2 Hardware configuration of the RF160C communication module 25
4.2 Installation of the standard software 25
4.3 Installation of the STEP 7 V14 project 26
4.4 Configuration of the PG/PC 26
4.5 Configuration of the S7 station 27
4.6 Parameterization of the RF160C communication module 29
4.7 Downloading the STEP 7 V14 project to the S7 CPU 31

5 Operation of the Application **32**

5.1 Starting the HMI simulation 32
5.2 Watch table 33
5.3 Resetting the RF160C communication module 34
5.4 Reading RFID data from the transponder 35
5.5 Writing RFID data to the transponder 36
5.6 Error while reading RFID data 37

6 References **39**

6.1 Bibliography 39
6.2 Internet links 39

7 History **39**

Copyright © Siemens AG 2012 All rights reserved

1 Task

Introduction

For incoming goods, stock keeping, production logistics and distribution, RFID (Radio Frequency Identification) provides complete tracking and documentation of all received, stored and shipped goods. For this purpose, a small data medium – referred to as a transponder – that stores all essential information is attached to each product, package or pallet.
A read/write device is used to read from and write to the transponder.

The figure below shows an example of such a situation.

Figure 1-1

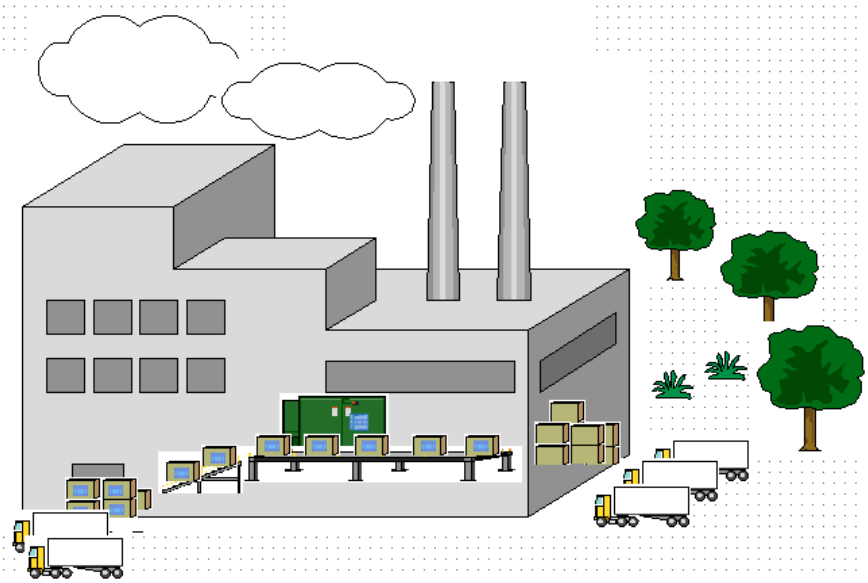

Overview of the automation task

To ensure complete tracking and documentation or to benefit from the use of RFID technology even during production, the connection to automation systems via communication modules and convenient function blocks is required in many cases.

Figure 1-2 Automation station

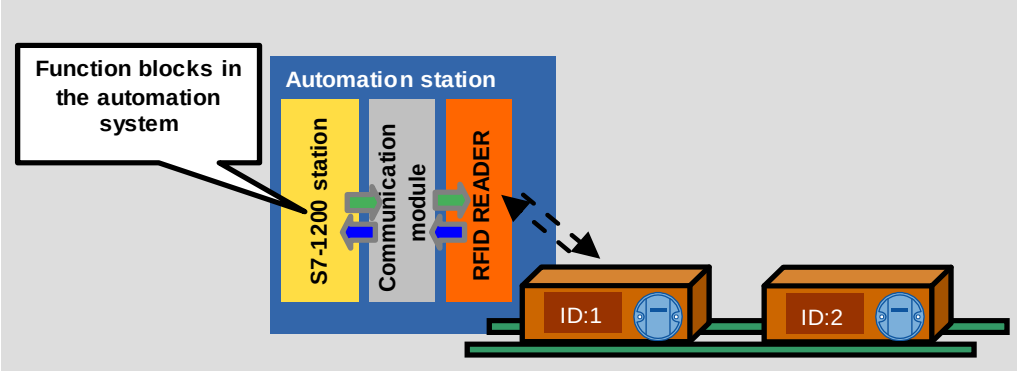

Copyright © Siemens AG 2012 All rights reserved

Requirements

The aim of this application is to cover the following requirements:

- An RF160C communication module is to be used to connect an RF300 reader to an S7-1200 CPU via PROFIBUS DP.
- The intention is to show how easily the function blocks of the RF160C_S71200_1500_V14_LIB library can be used for this task.
- The following RFID functions are to be implemented in the user program:
  - Reset RF160C communication module (RF160C_RESET)
  - Read RFID data from transponders (RF160C_READ)
  - Write RFID data to transponder (RF160C_WRITE)
  - Turn integrated antenna of RF310R reader on/off (RF160C_ANT_300)
- Integration of simple functions to monitor the implemented processes
- Error handling
- Operating option via a panel

A SIMATIC RF310R reader with a SIMATIC S7-1214C CPU is to be used to implement the application.

Copyright © Siemens AG 2012 All rights reserved

2 Solution

2.1 Overview

Diagrammatic representation

The diagrammatic representation below shows the most important components of the solution.

Figure 2-1

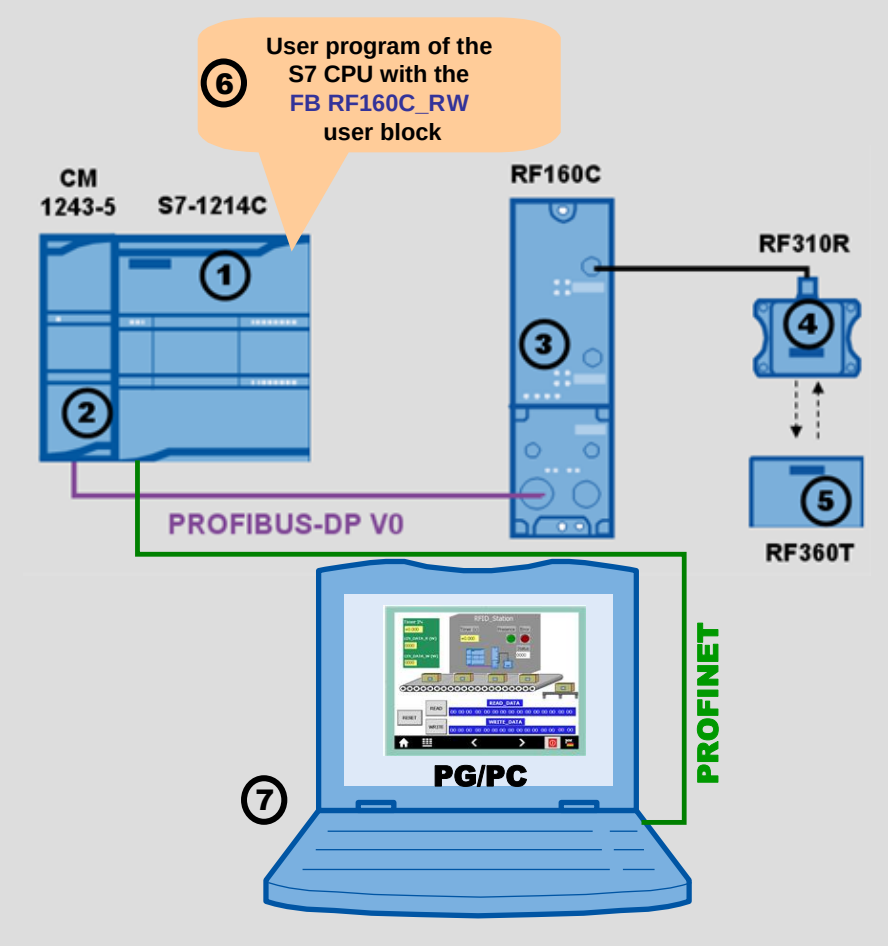

Components included

Table 2-1

No.	Component	Description
1	S7-1200 CPU	Any S7-1200 CPU can be used
2	CM 1243-5	Communication module to connect the S7-1200 CPU to PROFIBUS as a DP master
3	RF160C	Communication module/PROFIBUS DP slave
4	SIMATIC RF310R	Reader
5	SIMATIC RF360T	Transponder
6	User block	FB RF160C_RW (FB 160)
7	PG/PC	Programming device on which the RT Simulator of the panel is run

Copyright © Siemens AG 2012 All rights reserved

Configuration

The RF310R is connected to the S7-1200 via PROFIBUS DP using the RF160C communication module to which the RF310R is connected via its RS422 interface.

The FB RF160C_RW (FB160) user block has been created with the function blocks from the RF160C_S71200_1500_V14_LIB library. The interconnection of the RFID functions, monitoring functions and error handling are implemented in this block.

2.2 Description of the core functionality

Functions implemented

The following functions are implemented in the application example:

- Reset the RF160C communication module during startup of the S7-1200[1].
- Turn on the integrated antenna of the RF310R reader before starting a read or write job.
- Read RFID data when a transponder is in the reader's field.
- Write RFID data when a transponder is in the reader's field.
- Turn off the integrated antenna of the RF310R reader when a job has completed successfully or with an error.
- Time monitoring of the read, write function.

Note For a more detailed description of these functions, please refer to chapter 3 and the following chapters.

<u>Explanations of the difference between job and function</u>

Read job:	Call of the RF160C_READ function block of the library
Write job:	Call of the RF160C_WRITE function block of the library
Reset job	Call of the RF160C_RESET function block of the library
Read function:	The entire process for reading RFID data, including turning the integrated antenna of the reader on and off, read job and monitoring function.
Write function:	The entire process for writing RFID data, including turning the integrated antenna of the reader on and off, write job and monitoring function.
Reset function:	The entire process for resetting the RF160C communication module, including RESET job and turning off the integrated antenna of the reader.

[1] This function is also used to reset a read or write job or for error recovery.

Copyright © Siemens AG 2012 All rights reserved

Description of the user interface on the SIMATIC Panel

The application is operated using a configured SIMATIC KTP 1000 TouchPanel run in simulation mode directly on the programming device. The following figure and table describe the tags of the user interface. Alternatively, you can monitor or modify these tags using a watch table in STEP 7.

Figure 2-2 User interface of the panel used

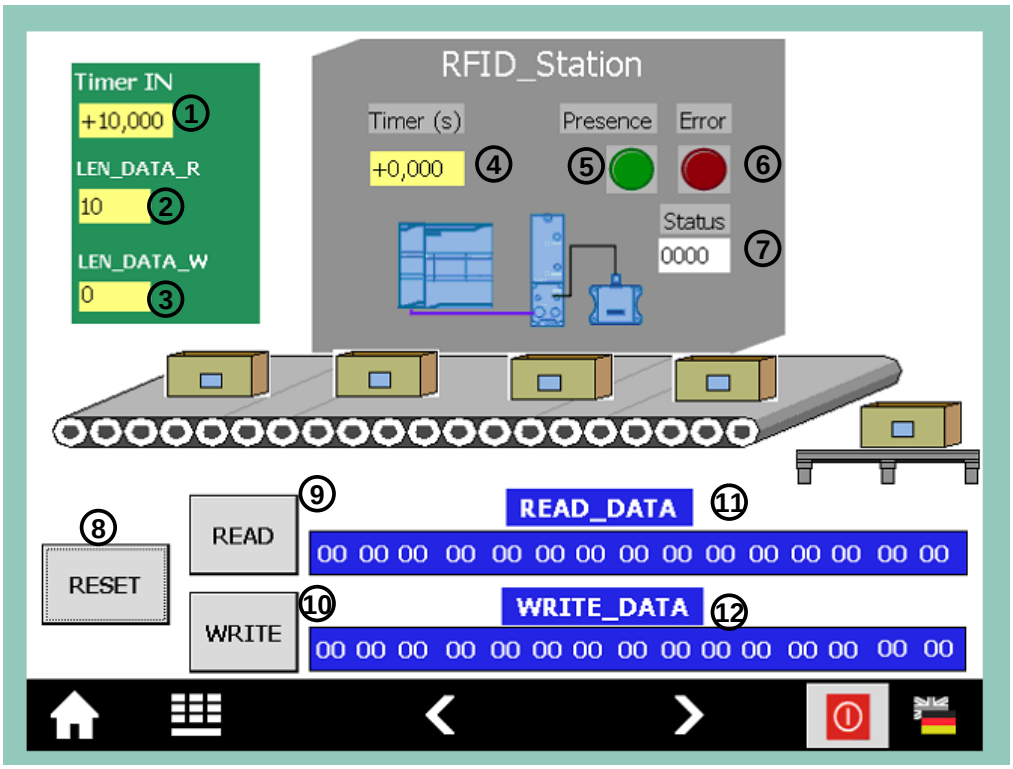

Table 2-2

No.	Element	Description
1	Timer IN	Input field: This timer monitors whether a transponder is in the reader's field. Period: Preset to 10 s.
2	LEN_DATA_R	Input field: Length of the RFID data that is read from the transponder (1..1000 bytes).
3	LEN_DATA_W	Input field: Length of the RFID data that is written to the transponder (1..1000 bytes).
4	Timer (s)	Output field: Elapsed time of the timer in seconds.
5	Presence	Presence bit On: Transponder in the reader's field Off: No transponder in the reader's field

Copyright © Siemens AG 2012 All rights reserved

No.	Element	Description
6	Error	Error bit On: Error Off: No error
7	Status	Output field: Status display (see chapter 3.3)
8	RESET	Button: Enables reset of the RF160C communication module.
9	READ	Button: Enables the read function.
10	WRITE	Button: Enables the write function.
11	READ_DATA	Output fields: Display of the data read from the transponder (max. 15 bytes).
12	WRITE_DATA	Input fields: Input of data to be written to the transponder (max. 15 bytes).

Copyright © Siemens AG 2012 All rights reserved

Scope

This application does not include the basics of

- SIMATIC RF160C. For more information, refer to document \3\.
- SIMATIC RF310R. For more information, refer to document \4\.
- the LAD/ FBD/ STL/ SCL programming languages.
- SIMATIC HMI HMI devices Basic Panels \5\.

Basic knowledge of these topics is required.

Validity of the application

- All S7-1200 CPUs from the SIMATIC product range
- STEP 7 V14, SP1
- WINCC V14, SP1
- Readers of the RFID families RF200/300/600, MOBY D/U (RS422 interface)

Advantages of this solution

This application example

- already includes the above-described functions on a fully implemented basis
- can be easily customized for extensions
- already includes the parameterization of the RF160C communication module
- can be commissioned quickly.

Typical main areas of application

The RF160C communication module has been specifically designed for a wide range of applications in industrial automation and logistics.

Main areas of application for the RF160C and this application:

- Machine building industry, automation systems, conveyor systems
- Auxiliary assembly lines in the automotive industry/suppliers
- Small assembly lines

2.3 Hardware and software components used

The application was created with the following components:

Hardware components

Table 2-3

Component	Qty.	Order no.	Note
PM1207 power supply	1	6EP1332-1SH71	
CPU 1214C DC/DC/DC	1	6ES7214-1AE30-0XB0	Alternatively, another S7-1200 CPU from the SIMATIC product range can also be used.
CM 1243-5 communication module	1	6GK7 243-5DX30-0XE0	
RF160C	1	6GT2002-0EF00	
ECOFAST connection block	1	6ES7194-3AA00-0AA0	
M12 connection block, 7/8"	1	6ES7194-3AA00-0BA0	
RF310R	1	6GT2801-1AB10	Alternatively, another reader with RS422 interface can also be used.
RF360T	n	6GT2800-4AC00	Alternatively, another transponder can also be used.
M12 cable plug	1	6GT2891-0LH50 (5 m) or 6GT2891-0LN10 (10 m)	

Standard software components

Table 2-4

Component	Qty.	Order no.
STEP 7 Professional V14, SP1	1	6ES7822-1AA04-0YA5
WinCC Professional V14, SP1	1	6AV210.-....4-0

Copyright © Siemens AG 2012 All rights reserved

Sample files and projects

The following list contains all files and projects that are used in this example.

Table 2-5

Component	Note
63969277_RF160C_RW_CODE_V11.zip	This zip file contains the STEP 7 project.
63969277_RF160C_RW_DOC_V11_en.pdf	This document.

2.4 Performance data

The following section gives you an overview of the size of the blocks of the STEP 7 project in the S7 CPU's main memory.

Blocks used and resource requirements

The size of all blocks in the S7 CPU's main memory is 12806 bytes. They are composed as follows.

Figure 2-3

Resources of PLC_1

	Objects	Load memory	Work memory
1		8 %	25 %
2			
3	Total:	2 MB	51200 bytes
4	Used:	166937 bytes	12806 bytes
5	Details		
6	OB	7422 bytes	215 bytes
7	Main [OB1]	3523 bytes	160 bytes
8	Startup [OB100]	3899 bytes	55 bytes
9	FC	-	-
10	FB	141514 bytes	8701 bytes
11	RF160C_READ [FB2]	39160 bytes	2760 bytes
12	RF160C_WRITE [FB3]	39774 bytes	2672 bytes
13	RF160C_RESET [FB4]	18873 bytes	888 bytes
14	RF160C_ANT_300 [FB6]	18511 bytes	978 bytes
15	RF160C_RW [FB160]	25196 bytes	1403 bytes
16	DB	17364 bytes	3890 bytes
17	RF_PARAMETER [DB1]	3937 bytes	2020 bytes
18	RF160C_READ_DB [DB2]	3076 bytes	448 bytes
19	RF160C_RESET_DB [DB4]	2174 bytes	280 bytes
20	RF160C_WRITE_DB [DB5]	3064 bytes	448 bytes
21	RF160C_ANT_300_DB [D...	2639 bytes	640 bytes
22	RF160C_RW_DB [DB160]	2474 bytes	54 bytes
23	Objects for Motion Technology	-	-
24	Data types	637 bytes	
25	RF_VAR	637 bytes	

Copyright © Siemens AG 2012 All rights reserved

3 Function Mechanisms of this Application

3.1 Functionality of the application example

3.1.1 Reset the RF160C communication module

Figure 3-1 Overview: Reset the RF160C communication module

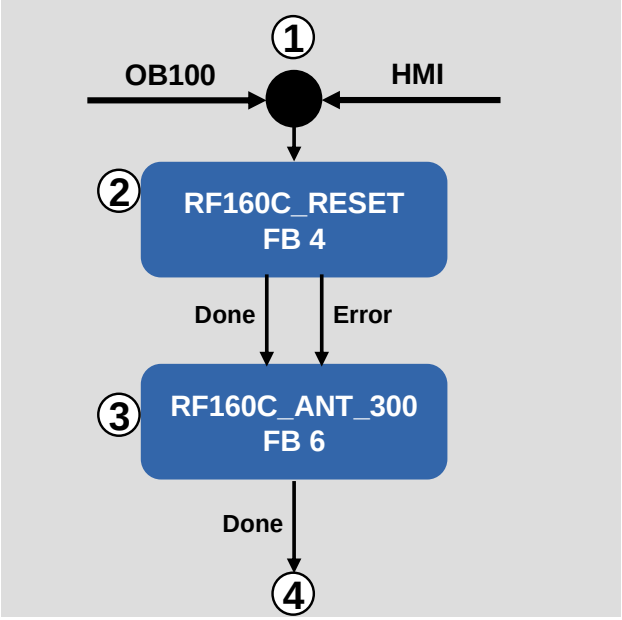

The table below shows you the individual steps of the reset function.

Table 3-1

No.	Description
1	Resetting the RF160C communication module starts: • Automatically after restarting the S7 CPU (startup OB, OB100) or • when clicking on the RESET button on the user interface of the SIMATIC Panel (HMI).
2	The RF160C_RESET library block resets the RF160C communication module.
3	The RF160C_ANT_300 library block turns off the antenna field on the reader when • the reset job has been successfully completed • an error has occurred while processing the reset job.
4	If the antenna field on the reader is turned off, the reset function will be terminated.

Copyright © Siemens AG 2012 All rights reserved

3.1.2 Read RFID data from transponder

Figure 3-2 Overview: Read RFID data from transponder

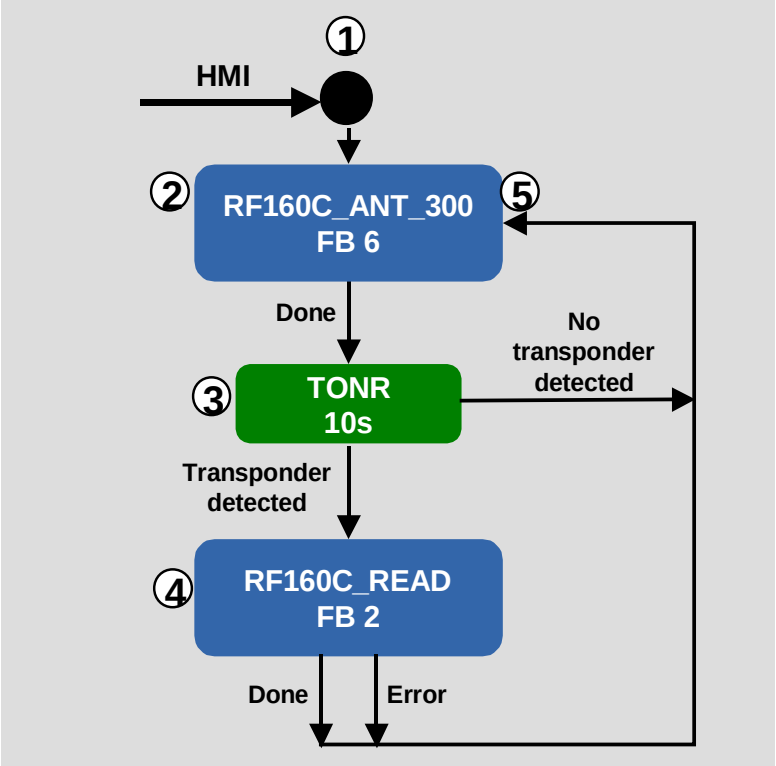

The table below shows you the individual steps of the read function (Read RFID data from transponder).

Table 3-2

No.	Description
1	Use the READ button on the user interface of the SIMATIC Panel (HMI) to start the read function.
2	The RF160C_ANT_300 library block turns on the antenna field on the reader.
3	The TONR watchdog timer monitors whether a transponder is in the reader's field. It is preset to 10 s.
4	If a transponder is detected in the reader's field within 10 s, the RF160C_READ library block will read the RFID data from the transponder.
5	The RF160C_ANT_300 library block turns off the antenna field on the reader when • the read job has been successfully completed • an error has occurred while processing the read job • no transponder was detected in the reader's field within 10 s. Turning off the antenna field terminates the read function.

Copyright © Siemens AG 2012 All rights reserved

3.1.3 Write RFID data to transponder

Figure 3-3 Overview: Write RFID data to transponder

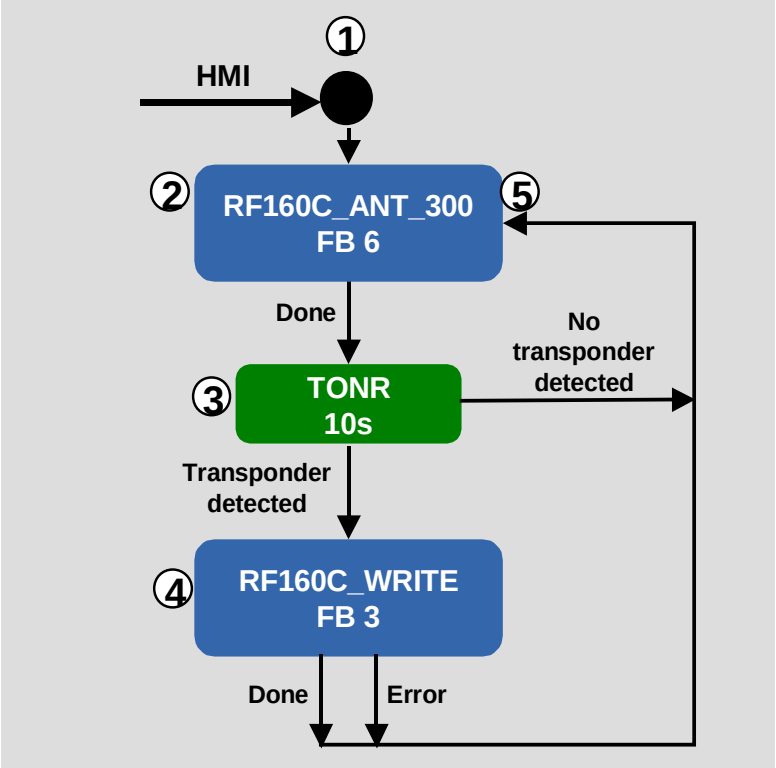

The table below shows you the individual steps of the write function (Write RFID data to transponder).

Table 3-3

No.	Description
1	Use the WRITE button on the user interface of the SIMATIC Panel (HMI) to start the write function.
2	The RF160C_ANT_300 library block turns on the antenna field on the reader.
3	A TONR watchdog timer monitors whether a transponder is in the reader's field. It is preset to 10 s.
4	If a transponder is detected in the reader's field within 10 s, the RF160C_WRITE library block will write the RFID data to the transponder.
5	The RF160C_ANT_300 library block turns off the antenna field on the reader when • the write job has been successfully completed • an error has occurred while processing the write job • no transponder was detected in the reader's field within 10 s. Turning off the antenna field terminates the write function.

Copyright © Siemens AG 2012 All rights reserved

3.2 Description of the STEP 7 V14 project

3.2.1 Overview

Introduction

The STEP 7 V14 project contains

- the user program for the S7 CPU:
  - Startup program (OB100)
  - Standard user program (OB1)
- Configuration and project engineering of the SIMATIC Panel.

Diagrammatic representation

The figure below shows the program structure of the entire STEP 7 project.

Figure 3-4

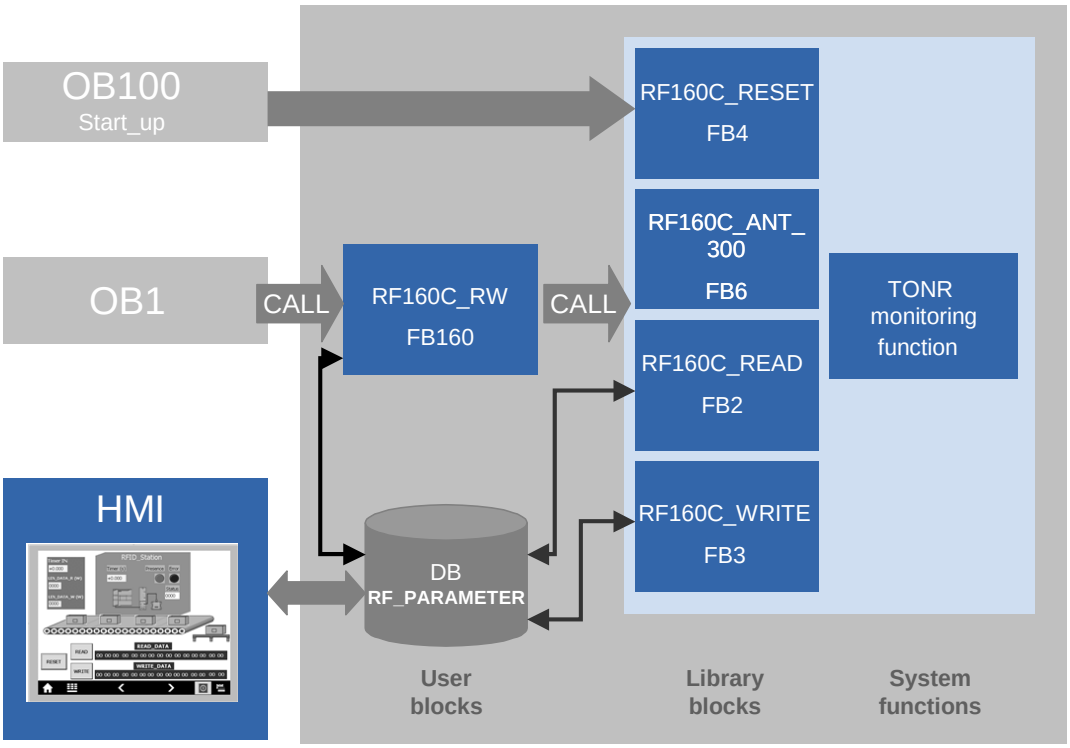

3.2.2 Startup program (OB100)

After startup of the RF160C, it must be reset. Reset is performed automatically after restarting the S7 CPU.

In the startup OB, OB100, the RF_PARAMETER.Start_up variable is set to the value 1. Therefore, the RF160C_RESET block is called with input EXECUTE = Start_up when called for the first time in OB1.

Then the RF_PARAMETER.Start_up variable is reset to the value 0 in OB1.

Copyright © Siemens AG 2012 All rights reserved

3.2.3 Standard user program (OB1)

The standard user program of the SIMATIC S7-1200 CPU consists of the following elements:

Table 3-4

Element	Symbolic name	Description	
OB1	Main	The RF160C_RW (FB160) block, including the associated instance data block, RF160C_RW_DB (DB160), is called cyclically in OB1.	
FB160	RF160C_RW	FB RF160C_RW (FB160) already includes the above-described functions (3.1 Functionality of the application example) on a fully implemented basis. The blocks from the RF160C_S71200_1500_V14_LIB library and the TONR monitoring function are called in this block.	
FB2	RF160C_READ	Function block for reading from the transponder.	Library elements
FB3	RF160C_WRITE	Function block for writing to the transponder.	
FB4	RF160C_RESET	Function block for resetting the RF160C.	
FB6	RF160C_ANT_300	Function block for turning the antenna of an RF300 reader on/off.	
DB1	RF_PARAMETER	Global data block for storing input and output parameters and RFID data (see chapter 3.2.7).	
PLC data type	RF_VAR	RFID data structure	
DB160	RF160C_RW_DB	Instance data block of the RF160C_RW (FB160) block	
DB2	RF160C_READ_DB	Instance data block of the RF160C_READ (FB2) block	
DB3	RF160C_WRITE_DB	Instance data block of the RF160C_WRITE (FB3) block	
DB4	RF160C_RESET_DB	Instance data block of the RF160C_RESET (FB4) block	
DB6	RF160C_ANT_300_DB	Instance data block of the RF160C_ANT_300 (FB6) block	

Note For a more detailed description of the library blocks, please refer to the “63969277_RF160C_S71200_1500_TIA_V11_en.pdf” library description \1\.

Copyright © Siemens AG 2012 All rights reserved

3.2.4 FB RF160C_RW parameters

The following figure and table show the call interface of the FB RF160C_RW (FB160) user block.

Figure 3-5

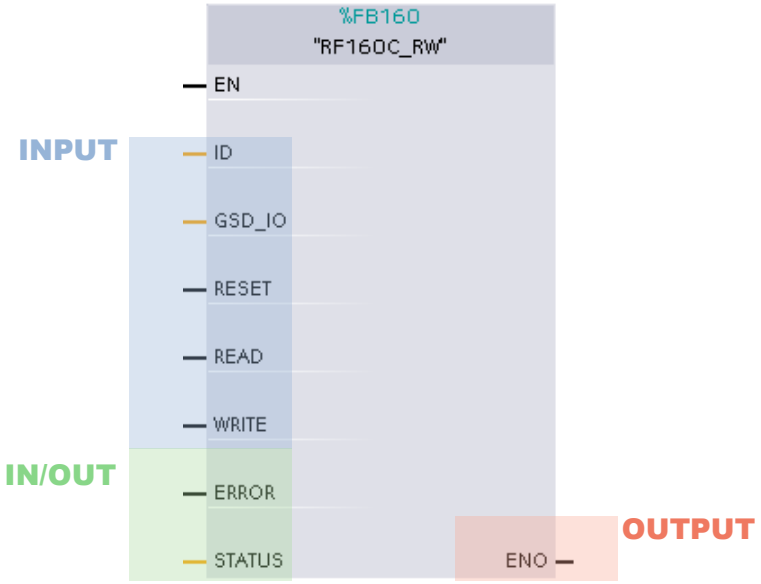

Table 3-5

Symbol	Data type	Explanation
EN	BOOL	Enable input. Relevant only in FBD and LAD representation.
ID	INT	Start address of the input and output ranges of the RF160C. 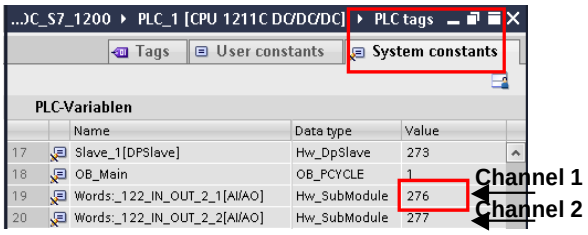
GSD_IO	INT	Size of the input and output range of the entire RF160C as selected in the GSD file[2]. 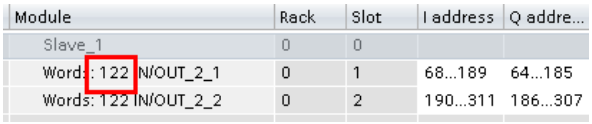
RESET	BOOL	• Enables reset of the RF160C • Reacts to a positive edge
READ	BOOL	• Enables the read function • Reacts to a positive edge
WRITE	BOOL	• Enables the write function

[2] Input in words and corresponds to the value of the GSD setting in HW Config. GSD_IO defines the maximum data that can be transferred in one block run.

Copyright © Siemens AG 2012 All rights reserved

Symbol	Data type	Explanation
		• Reacts to a positive edge
ERROR	BOOL	TRUE if an error occurs when executing the routine. FALSE if a new command is started. Default value: FALSE
STATUS	WORD	Status if ERROR=TRUE (see chapter 3.3 Error and status display) Takes on the value DW#16#00 as soon as a new command is started.
ENO	BOOL	Enable output. Relevant only in FBD and LAD representation.

3.2.5 Call example: FB RF160C_RW (FB160) in OB1

The RF160C_RW function block is called cyclically in OB1.

The figure below shows a call example. The input and output parameters are stored in the global data block, RF_PARAMETER.

Figure 3-6

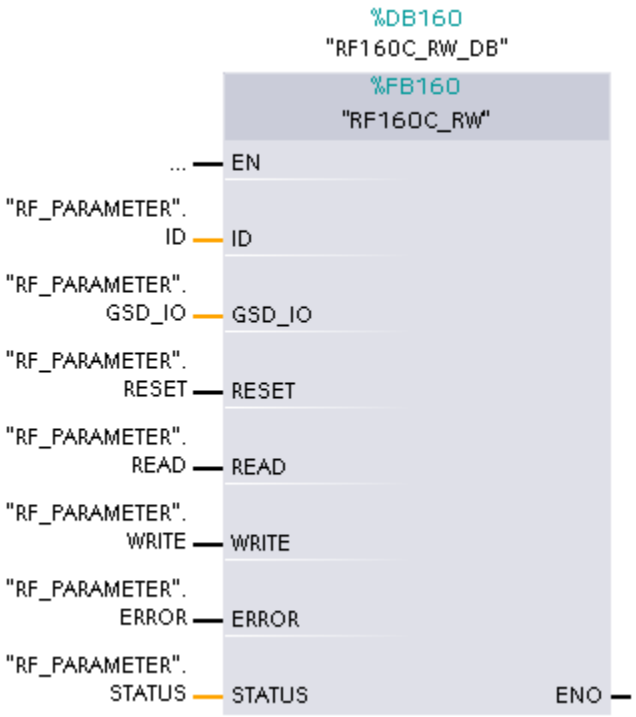

Copyright © Siemens AG 2012 All rights reserved

3.2.6 Global data block: RF_PARAMETER (DB1)

The following data is stored in RF_PARAMETER:

- Input and output parameters of the user block (see Table 3-4)
- Monitoring time
- Parameters of the data to be read
- Parameters of the data to be written
- Parameters for the startup OB (OB 100)

Figure 3-7 Global data block: RF_PARAMETER (DB1)

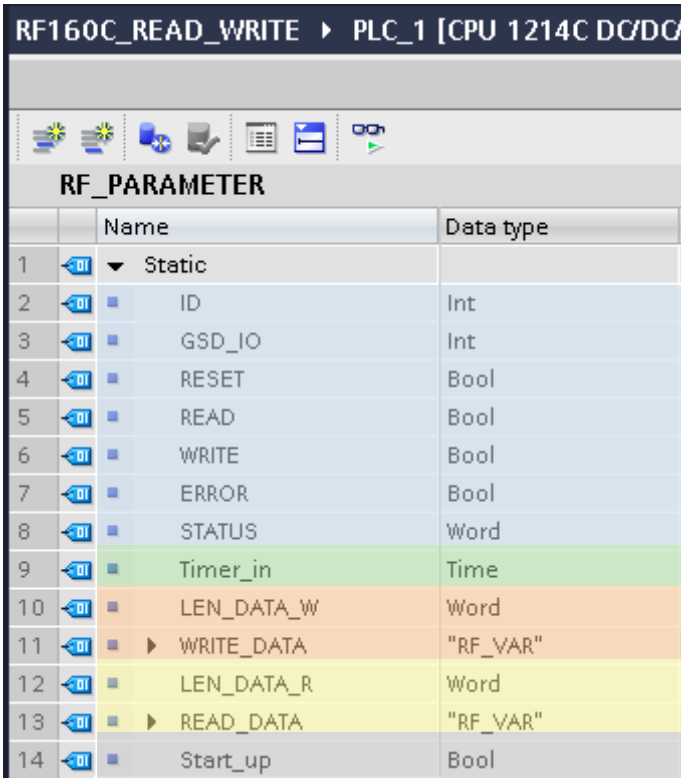

	Name	Data type
1	Static	
2	ID	Int
3	GSD_IO	Int
4	RESET	Bool
5	READ	Bool
6	WRITE	Bool
7	ERROR	Bool
8	STATUS	Word
9	Timer_in	Time
10	LEN_DATA_W	Word
11	WRITE_DATA	"RF_VAR"
12	LEN_DATA_R	Word
13	READ_DATA	"RF_VAR"
14	Start_up	Bool

For your solution, you can also store this data in other data blocks.

Copyright © Siemens AG 2012 All rights reserved

3.2.7 Configuration and project engineering of the SIMATIC Panel

Overview

The application is operated using a configured SIMATIC KTP 1000 TouchPanel.

The following table shows the screens of the SIMATIC Panel.

Table 3-6

Name/description	Note
Start screen This screen appears automatically after starting the HMI simulator. • RFID_Application: Open Factory_Overview • Support: Open support information • Change language	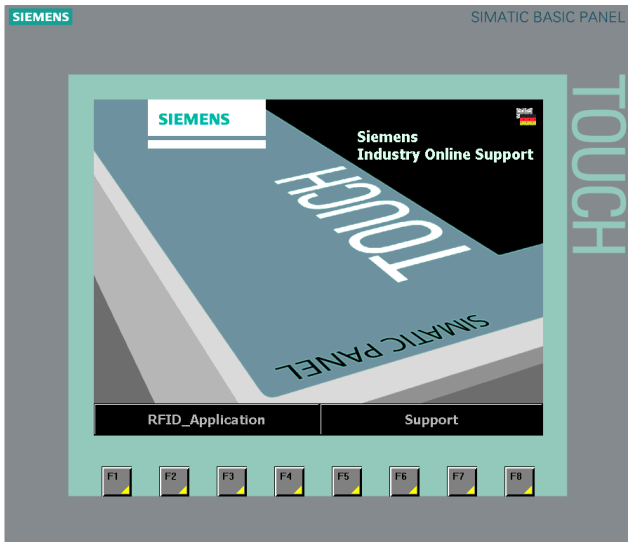
Overview Factory_Overview This screen provides an overview of the automation task. • Open start screen • Open support information • Open RFID_Station • Change language	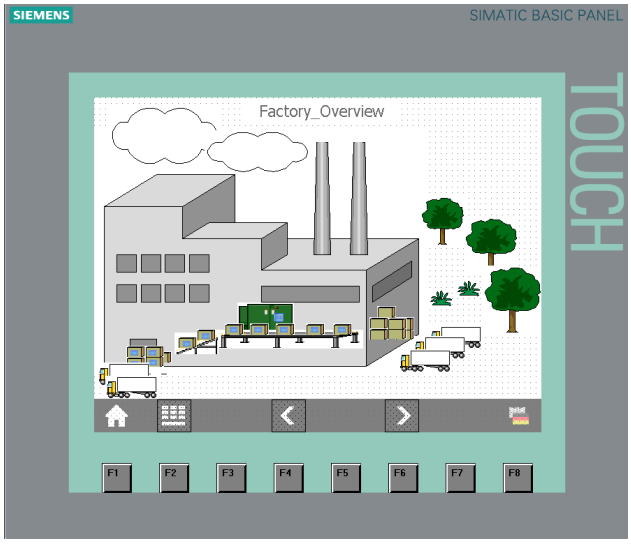

Copyright © Siemens AG 2012 All rights reserved

Name/description	Note
RFID_Station This screen is used to operate the application. • Open start screen • Open support information • Open overview • Change language • Exit simulator	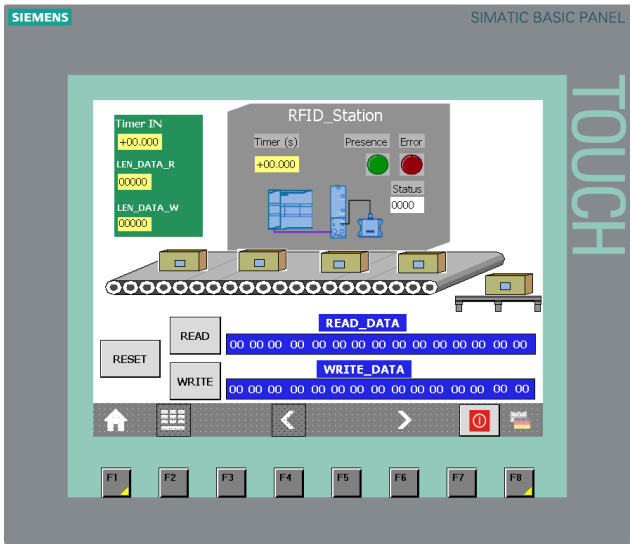
Support Information on Siemens Industry Online Support • Open start screen • Change language	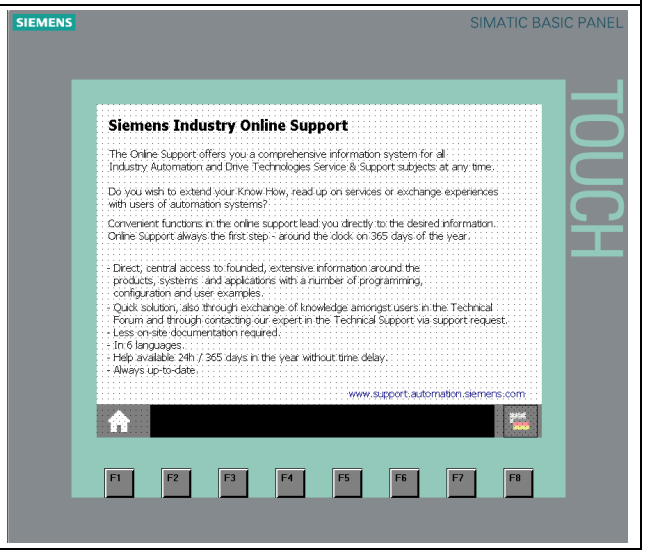

Copyright © Siemens AG 2012 All rights reserved

Human machine interface

The data for visualization is stored in the variables of the RF_PARAMETER (DB1) data block (see Figure 3-7). These variables are integrated into WinCC Professional V14 SP1 and form the HMI.

The following tags are used in the RFID_Station screen:

Table 3-7

HMI tag	RF_PARAMETER variable
TIMER IN	RF_PARAMETER.Timer_in
LEN_DATA_R	RF_PARAMETER.LEN_DATA_R
LEN_DATA_W	RF_PARAMETER.LEN_DATA_W
Error	RF_PARAMETER.ERROR
Status	RF_PARAMETER.STATUS
RESET	RF_PARAMETER.RESET
READ	RF_PARAMETER.READ
WRITE	RF_PARAMETER.WRITE
READ_DATA	RF_PARAMETER.READ_DATA[1..15]
WRITE_DATA	RF_PARAMETER.WRITE_DATA[1..15]

Copyright © Siemens AG 2012 All rights reserved

3.3 Error and status display

For error diagnostics, the RF160C_RW (FB160) function block has a STATUS output. Read the STATUS output of the function block to be provided with information on

- error messages of the RF160C_RW (FB160) function block and the function blocks of the library
- error messages of the RF160C or connected readers.

3.3.1 Error messages of the FB RF160C_RW (FB160) function block and the function blocks of the library

Table 3-8

STATUS	Meaning	Remedy	
16#8101	The length of the data block (LEN_DATA) is outside the range of the “Data” variable in the RF_VAR data structure.	Adjust the length of the “Data” RF_VAR variable (“63969277_RF160C_S7120 0_1500_TIA_V11_en.pdf”, chapter 3.5) \1\ or enter a LEN_DATA within the valid range (1..1000).	Library
16#8102	The previous job has not yet been completed.	• Wait until BUSY=FALSE • Restart process	
16#8103	No transponder in the field.		Appli-cation
16#W#80xy 16#W#87xy 16#W#85xy	Error messages of the extended instructions DPRD_DAT and DPWR_DAT.	Online help in STEP 7	System functions
16#25xy	Error messages of the GetErrorID instruction.	Online help in STEP 7	
16#0500	After startup of the RF160C, no RESET is performed (see also \3\, chapter 6.4.2)	Start reset function	RF160C

3.3.2 Error messages of the RF160C or connected readers

The reported errors (STATUS, 16#xx00) can be generated either directly by the RF160C or they are provided by the connected reader and transferred by the RF160C.

In the first case, the ERR_LED of the RF160C indicates an error; in the other case, the ERR_LED of the reader is activated.

For a more detailed overview of these errors, please refer to the following manual: “SIMATIC Sensors RF160C with FC44” (see \3\, chapter 6.4.2).

Copyright © Siemens AG 2012 All rights reserved

4 Installation and Commissioning

4.1 Hardware configuration

For the necessary hardware components, please refer to chapter 2.3 (Hardware and software components used).

NOTICE **Follow the installation guidelines for S7-1200 (\6\) and RF160C (\3\). Refer to the relevant manuals.**

NOTICE **Before you switch on the power supply, complete and check the installation!**

The figure below shows the hardware configuration of the application.

Figure 4-1

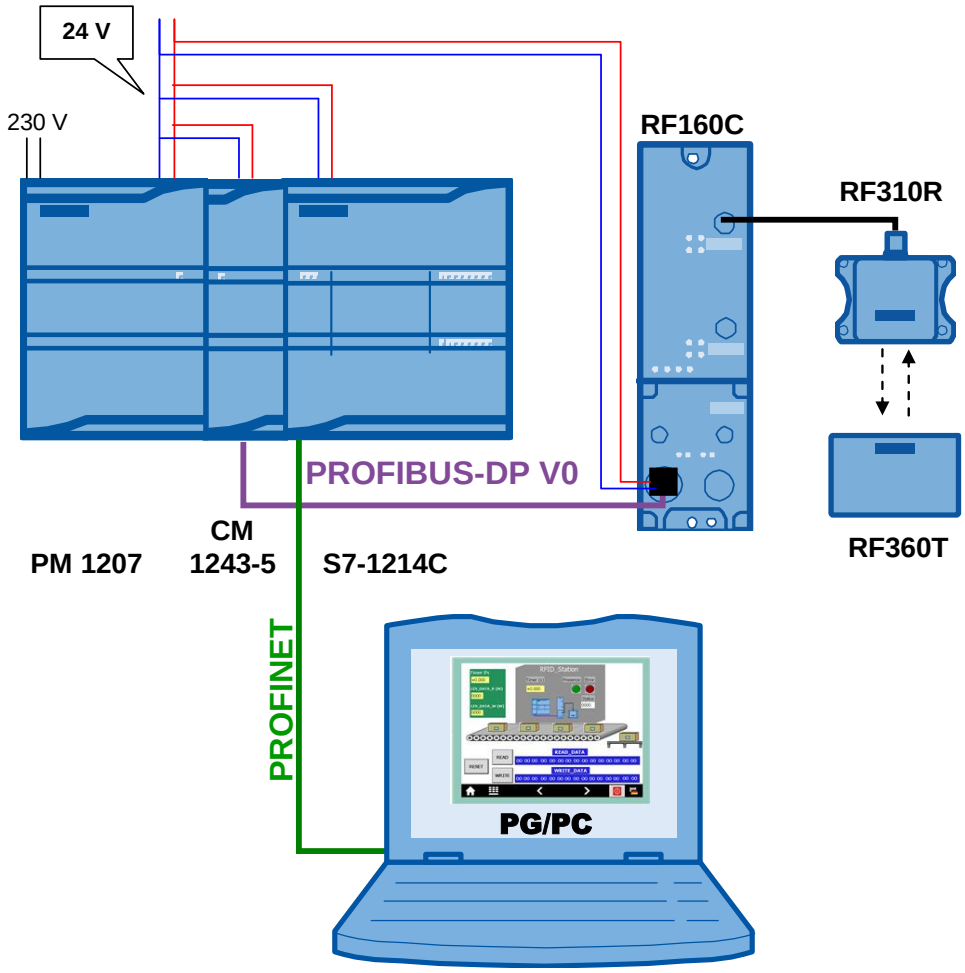

Copyright © Siemens AG 2012 All rights reserved

4.1.1 Hardware configuration of the S7 station

Table 4-1

No.	Action	Remark
1	Attach the individual modules to a suitable rack.	See Table 2-3
2	Connect the PM 1207 to the network. (230 V AC)	Ensure that the polarity is correct when wiring the 24 V.
3	Connect the following devices: • PROFINET interface of the PG/PC to the PROFINET interface of the S7 CPU • PROFIBUS interface of the RF160C to the PROFIBUS interface of the CM 1243-5 communication module	

4.1.2 Hardware configuration of the RF160C communication module

Table 4-2

No.	Action	Remark
1	Connect the RF310R reader to the respective RF160C sockets.	
2	Plug the ECOFAST connection block onto the RF160C module.	See \3\, chapter 2.3.
3	Set the PROFIBUS DP address for the RF160C on the connection block. The set PROFIBUS address must match the PROFIBUS address set in the configuration software (for the RF160C) (see Table 4-8, step 3).	See \3\, chapter 4.1.
4	Use the ECOFAST connector to connect the supply voltages and PROFIBUS DP to the ECOFAST connection block.	Ensure that the polarity is correct when wiring the 24 V.

4.2 Installation of the standard software

Table 4-3

No.	Action	Remark
1	Install TIA V14, SP1 (latest update)	Follow the instructions of the installation program.
2	Install WinCC Professional V14, SP1	Follow the instructions of the installation program.

Copyright © Siemens AG 2012 All rights reserved

4.3 Installation of the STEP 7 V14 project

The following table lists the steps necessary to install the STEP 7 V14 project.

Table 4-4

No.	Procedure
1	The STEP 7 V14 project is available on the HTML page from which you downloaded this document. Save the **63969277_RF160C_RW_CODE_V11.zip** project to your hard drive.
2	Unzip the project.
3	In TIA Portal V14, open the STEP 7 V14 project. “Project > Open > Browse”
4	The project is now available to you.

4.4 Configuration of the PG/PC

Changing the IP address

The figure shows the network setting to which you have to change the PG/PC!

Table 4-5

No.	Action	Remark/note
1	Open the Internet Protocol (TCP/IP) Properties by selecting “Start > Settings > Network Connection >Local Connections”. In the open window, select Internet Protocol (TCP/IP) and open the Properties. Select “Use the following IP address” and fill out the field as shown in the screen shot. Close the dialog boxes with “OK”.	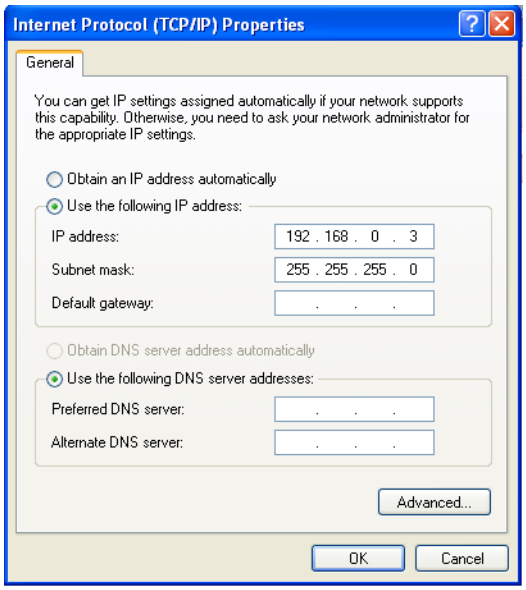
2	If your PG has an IWLAN interface, disable it.	

Copyright © Siemens AG 2012 All rights reserved

4.5 Configuration of the S7 station

Note It is not necessary to make the following settings in the application example, as they are already included in the project. This chapter is for information only.

Changing the IP address of the CPU

Before the STEP 7 project can be downloaded to the CPU, you have to change the IP address of the S7-1200 CPU via which the project is downloaded to the CPU.

Table 4-6

No.	Action
1	In TIA Portal, open the Device configuration of the PLC_1 [CPU 1214C DC/DC/DC] station. 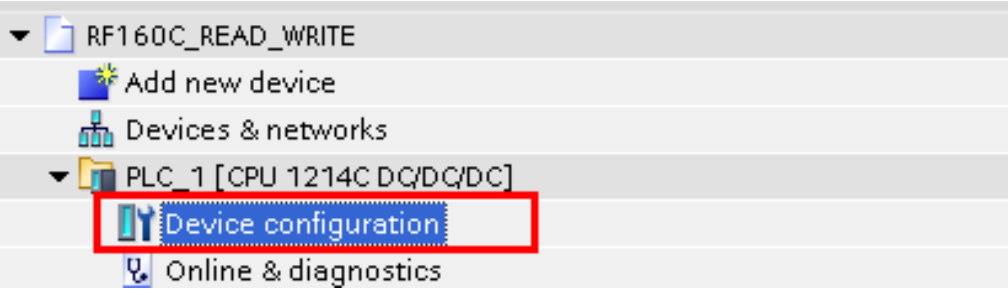
2	In the Device view, double-click on the PROFINET interface of the CPU. The “Properties > Ethernet addresses” window opens. 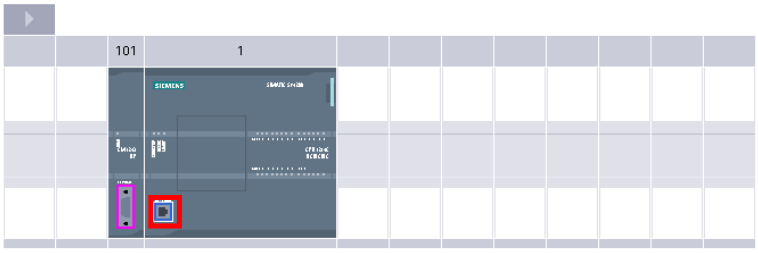 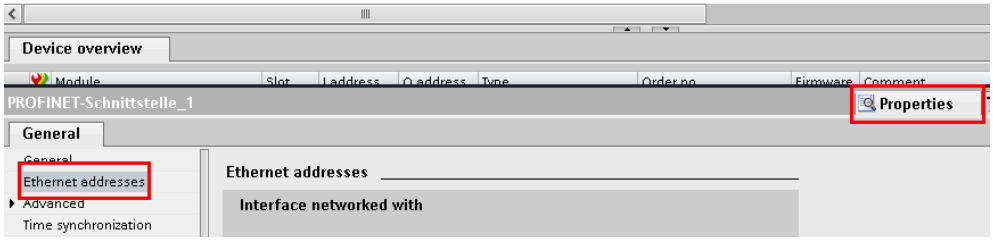

Copyright © Siemens AG 2012 All rights reserved

No.	Action
3	In the “Ethernet addresses > IP protocol” menu, enter the IP address. 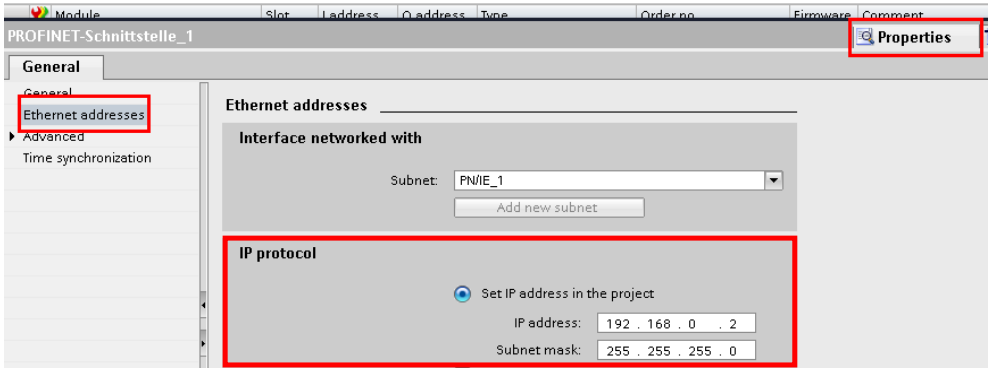

Assigning the PROFIBUS address of the CM 1243-5

Table 4-7

No.	Action
1	In TIA Portal, open the Device configuration of the PLC_1 [CPU 1214C DC/DC/DC] station. 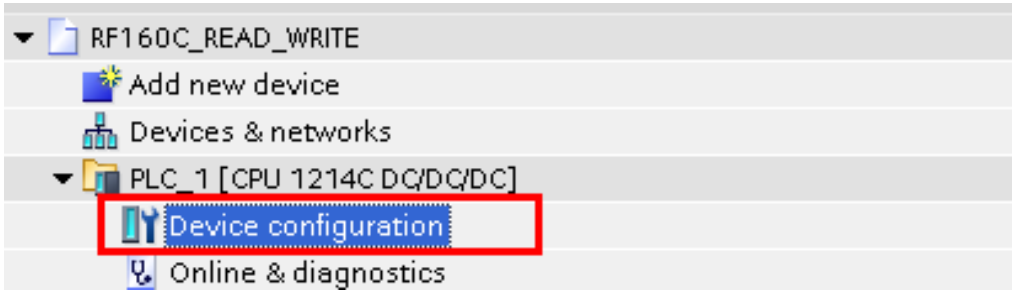
2	In the Device view, double-click on the PROFIBUS interface of the CM 1243-5. The “Properties > PROFIBUS address” window opens. 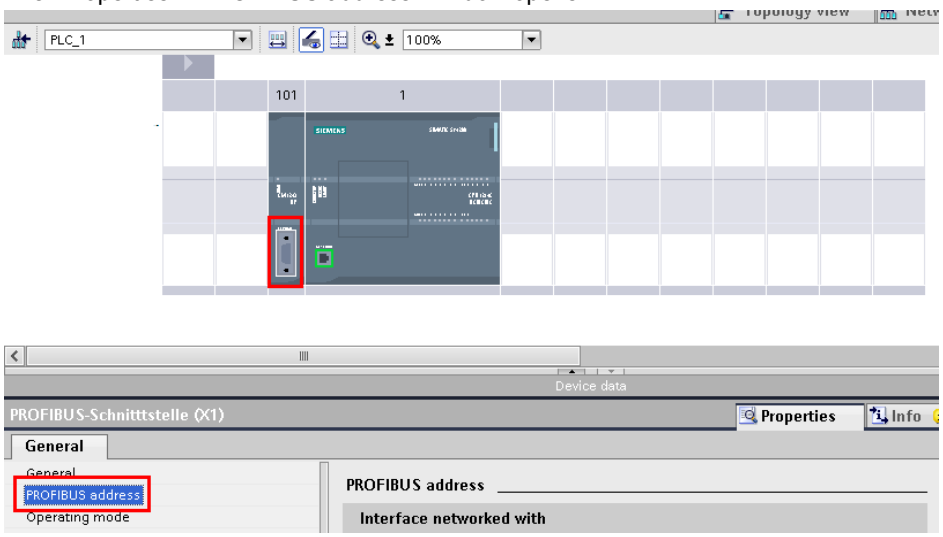

Copyright © Siemens AG 2012 All rights reserved

No.	Action
3	In the “PROFIBUS address > Parameters” menu, enter the PROFIBUS address. 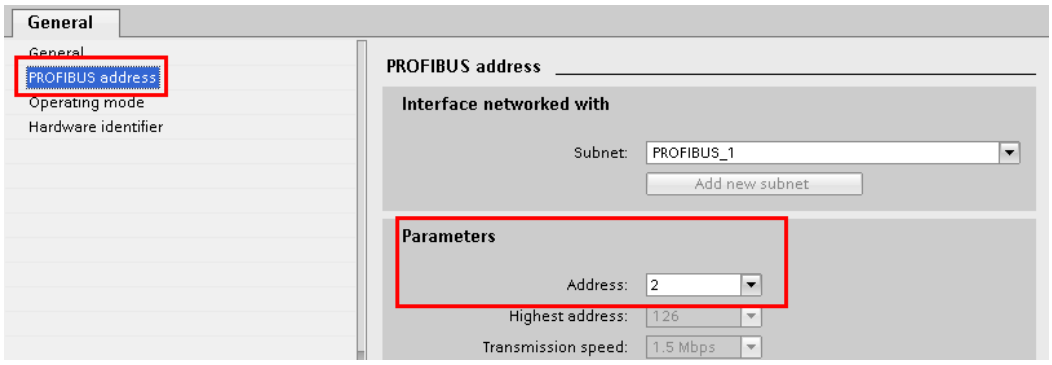

4.6 Parameterization of the RF160C communication module

Before you start parameterizing the RF160C, install the SIEM818A.GSD GSD file, “http://www.automation.siemens.com/mcms/topics/en/comdec/downloads > GSD Files > PROFIBUS > IDENT > RF160C”, if the RF160C is not yet listed in the hardware catalog.

Note It is not necessary to make the following settings in the application example, as they are already included in the project. This chapter is for information only.

Table 4-8

No.	Action
1	In TIA Portal, open the Device configuration of the PLC_1 [CPU 1214C DC/DC/DC] station in the Network view. 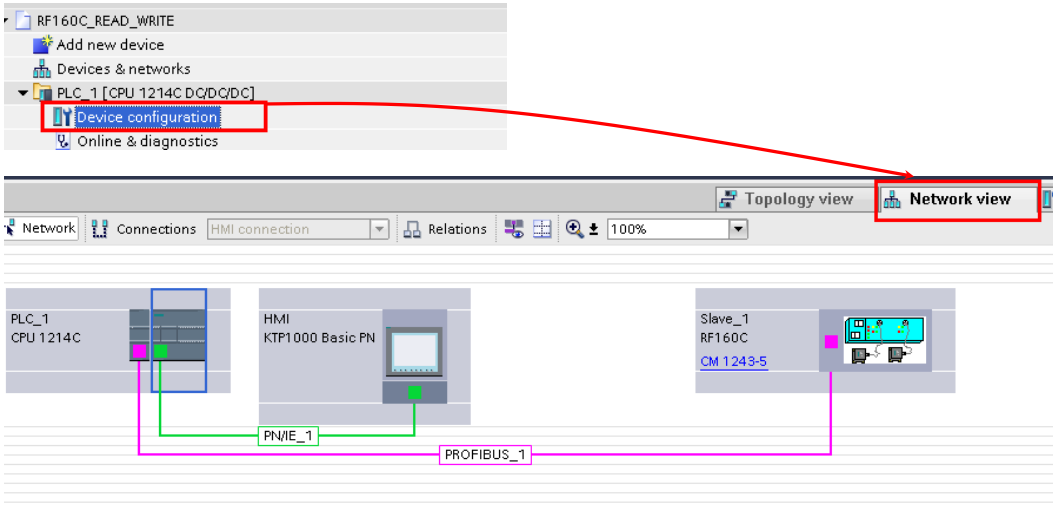

Copyright © Siemens AG 2012 All rights reserved

No.	Action
2	Double-click on the RF160C communication module. The Properties window of the RF160C opens. 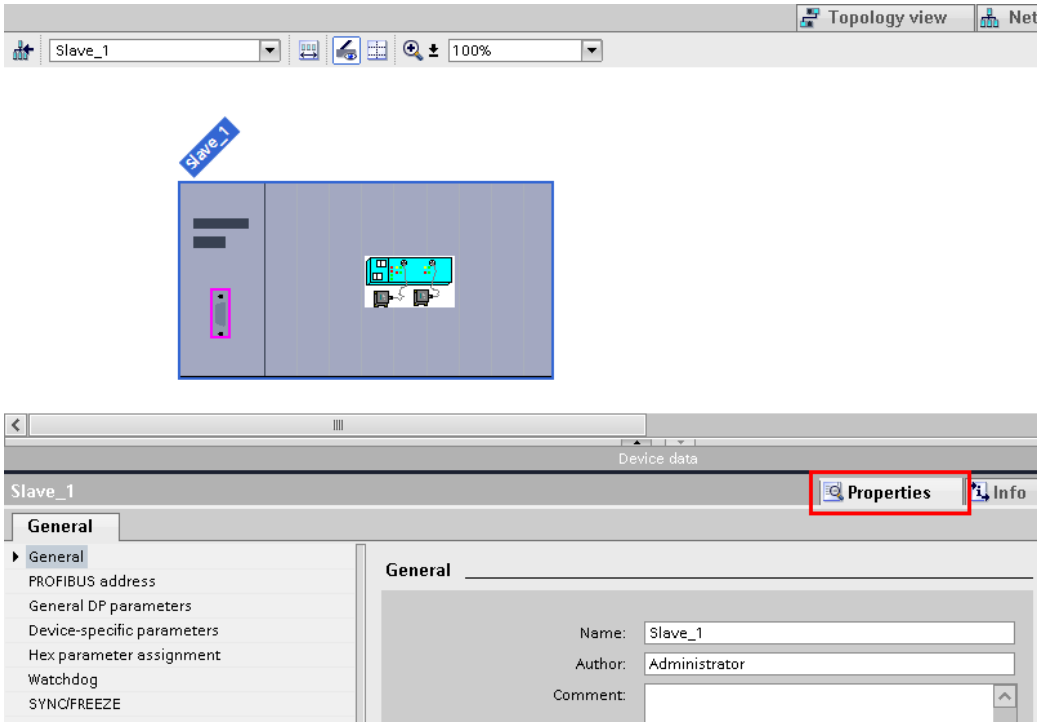
3	In the “Properties > PROFIBUS address” menu, enter the PROFIBUS address of the RF160C. This address must match the PROFIBUS DP address set on the connection block of the RF160C (see Table 4-2). 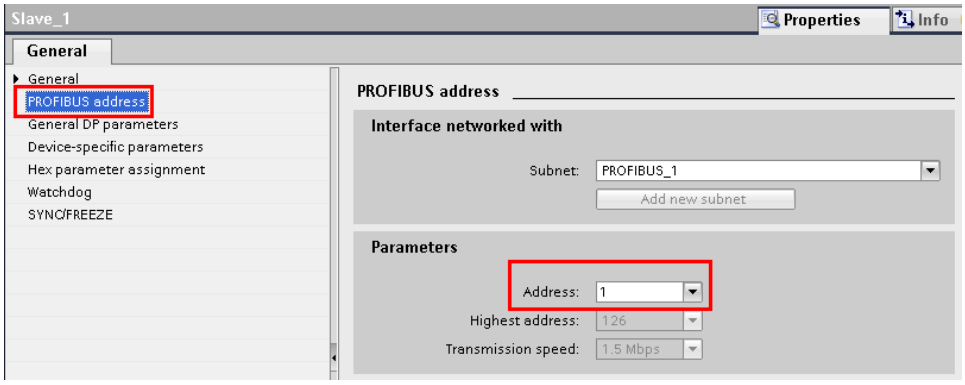
4	Set the DP interrupt mode of the RF160C to DPV0. 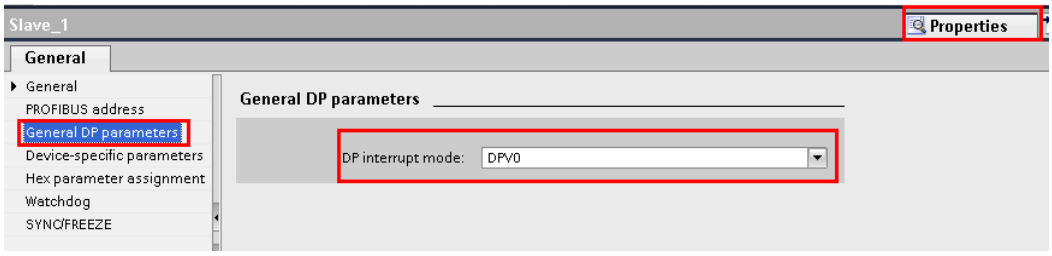

Copyright © Siemens AG 2012 All rights reserved

No.	Action
5	In the “Device-specific parameters” menu, set the additional parameters the identification systems require (see \3\, chapter 5.2). 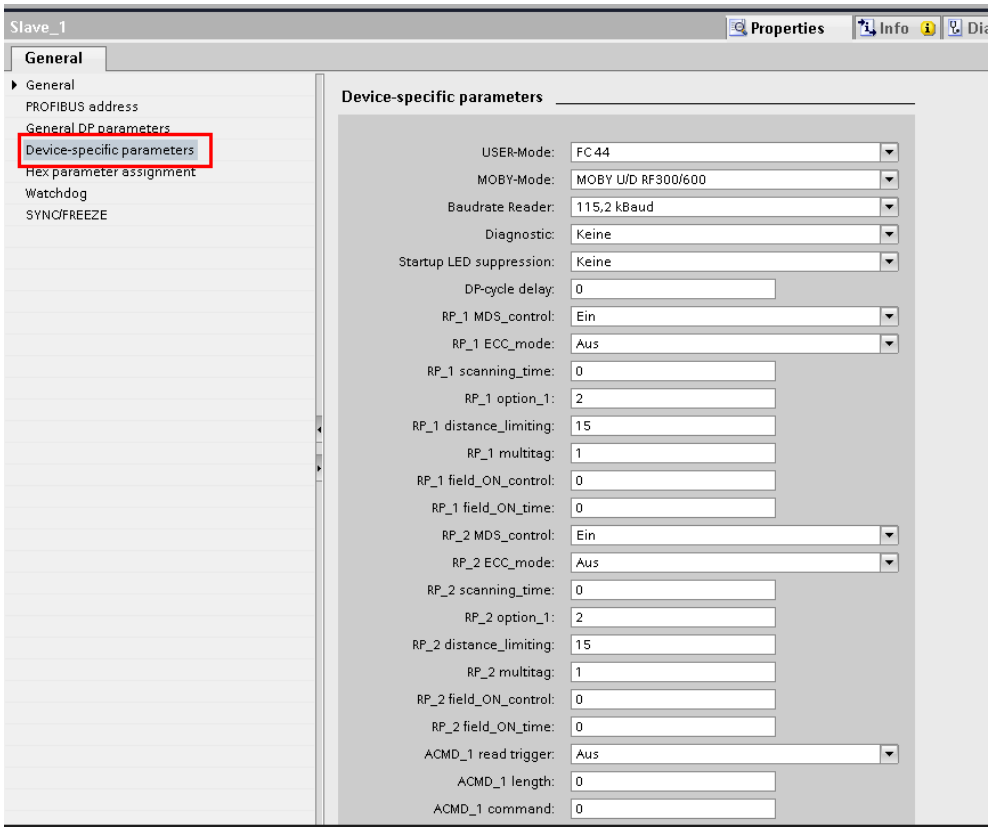

Copyright © Siemens AG 2012 All rights reserved

4.7 Downloading the STEP 7 V14 project to the S7 CPU

Prerequisite:

- The STEP 7 V14 project has already been installed and unzipped (see Installation of the STEP 7 V14 project).
- The PG/PC is connected to the S7-1200 CPU via the PROFINET interface (see Configuration of the PG/PC and Configuration of the S7 station).
- The settings necessary for the RF160C have already been made (see Parameterization of the RF160C communication module).

Procedure:

- Start TIA Portal
- Open the Project view
- Open the “RF160C_READ_WRITE” project
- In the Project tree:
  - Select “PLC_1 [CPU 1214C DC/DC/DC]”
  - Right-click and select:
    “Download to device > all”

5 Operation of the Application

Introduction

This chapter shows you how to operate the above-described functions of this application.

The application is operated using a configured SIMATIC KTP 1000 TouchPanel run in simulation mode directly on the programming device. Alternatively, you can operate the application using a watch table.

5.1 Starting the HMI simulation

Table 5-1

No.	Procedure
1	Open the following STEP 7 V14 project: “RF160C_READ_WRITE”.
2	Start the simulation of the SIMATIC KTP 1000 TouchPanel. 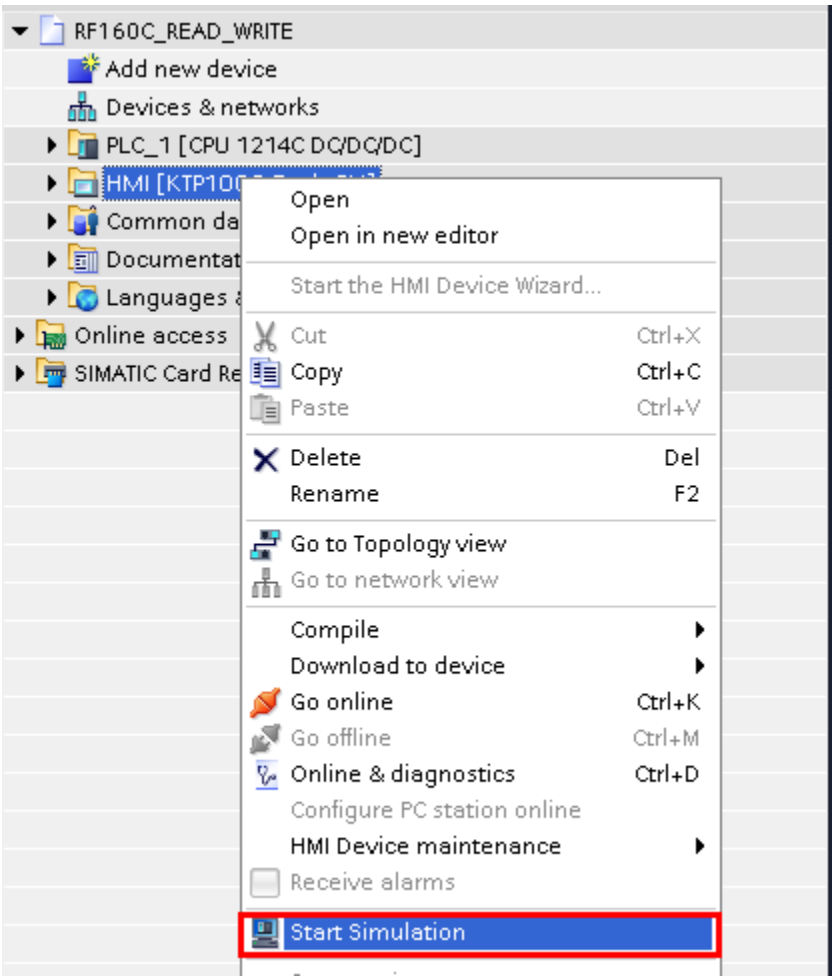

Copyright © Siemens AG 2012 All rights reserved

No.	Procedure
3	Open the “RFID_Station” operating screen “Start screen > RFID_Application > right arrow key”. 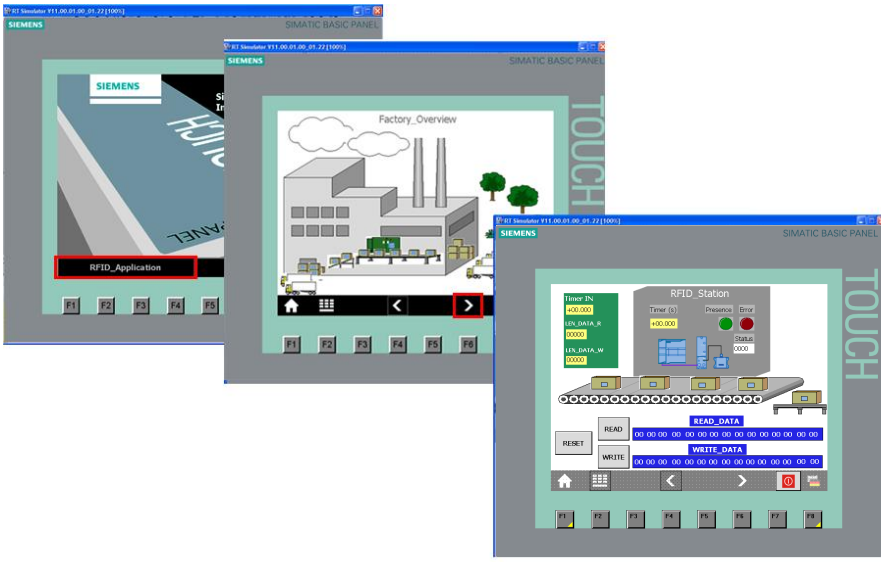

Copyright © Siemens AG 2012 All rights reserved

5.2 Watch table

Alternatively, you can use the “Watch_Table_RF160C_RW” table to monitor or modify the variables of DB RF_PARAMETER (DB1).

Figure 5-1 Watch_Table_RF160C_RW watch table

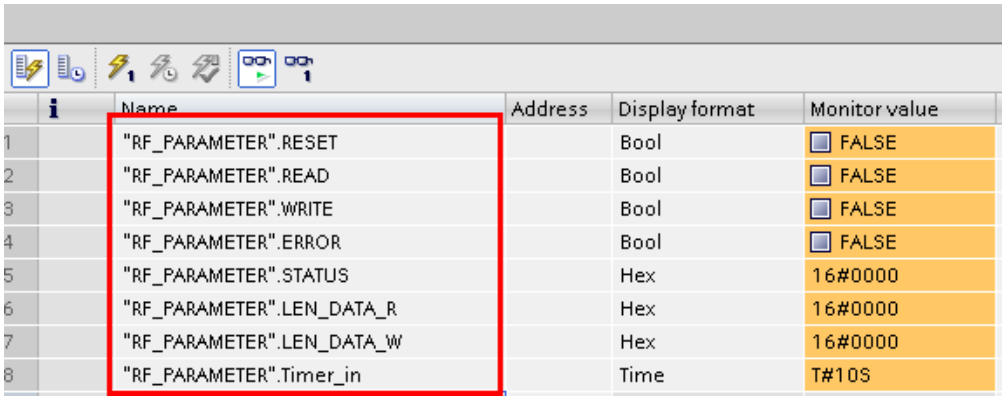

	i	Name	Address	Display format	Monitor value
1		"RF_PARAMETER".RESET		Bool	FALSE
2		"RF_PARAMETER".READ		Bool	FALSE
3		"RF_PARAMETER".WRITE		Bool	FALSE
4		"RF_PARAMETER".ERROR		Bool	FALSE
5		"RF_PARAMETER".STATUS		Hex	16#0000
6		"RF_PARAMETER".LEN_DATA_R		Hex	16#0000
7		"RF_PARAMETER".LEN_DATA_W		Hex	16#0000
8		"RF_PARAMETER".Timer_in		Time	T#10S

Open the table as follows:

- Open the Project tree
- Open “PLC_1 [CPU1214C DC/DC/DC]”
- Open “Watch and force tables”
- Open the “Watch_Table_RF160C_RW” table
- Select “Go online”
- Select “Monitor all”

5.3 Resetting the RF160C communication module

Reset will be performed automatically after restarting the CPU. If you want to interrupt a read or write job or clear an error, click on the RESET button.

Figure 5-2

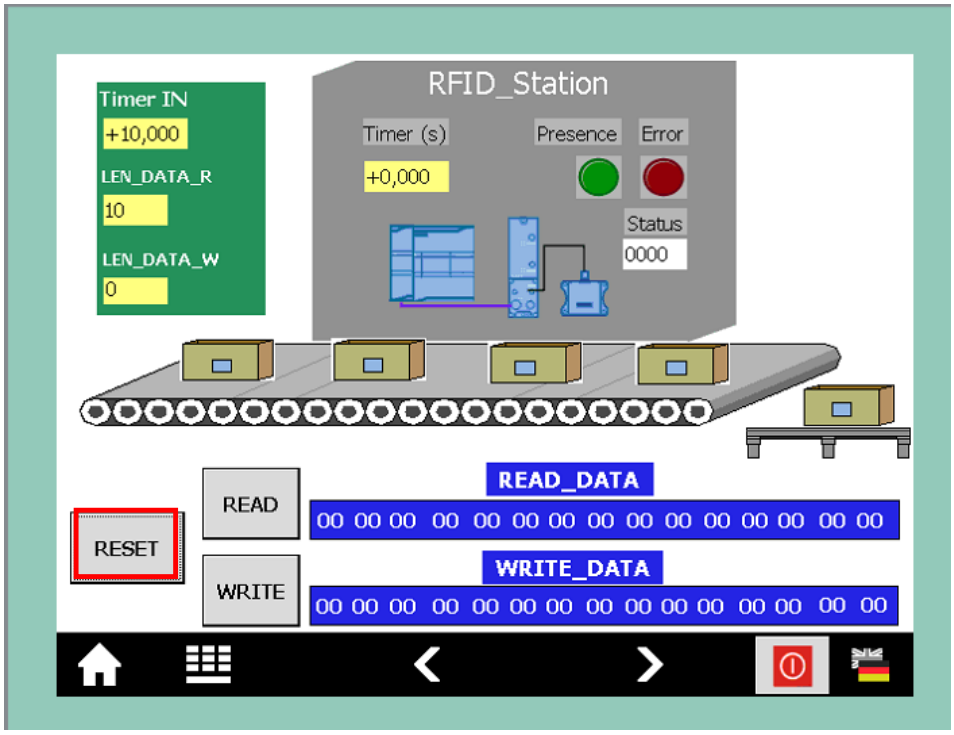

Copyright © Siemens AG 2012 All rights reserved

5.4 Reading RFID data from the transponder

The table below lists instructions for reading RFID data from the transponder.

Table 5-2

No.	Procedure
1	In the input fields, enter the values relevant to reading the RFID data. 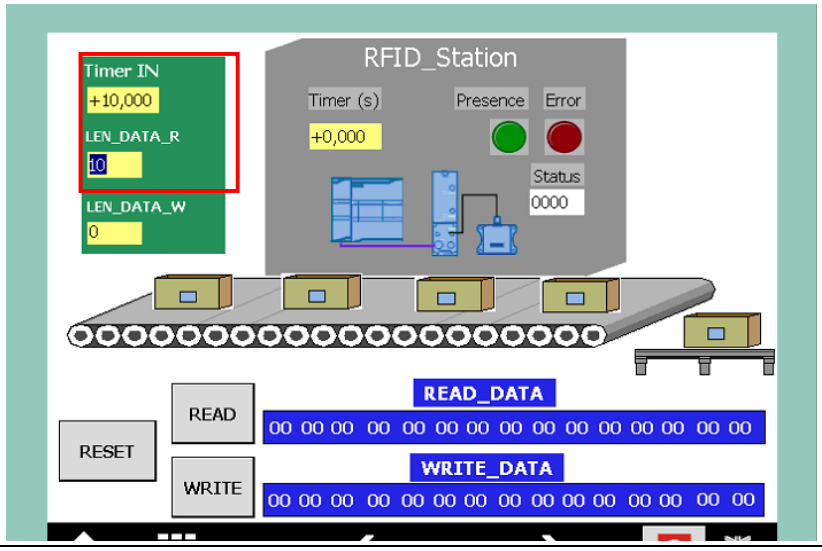
2	Click on the READ button. 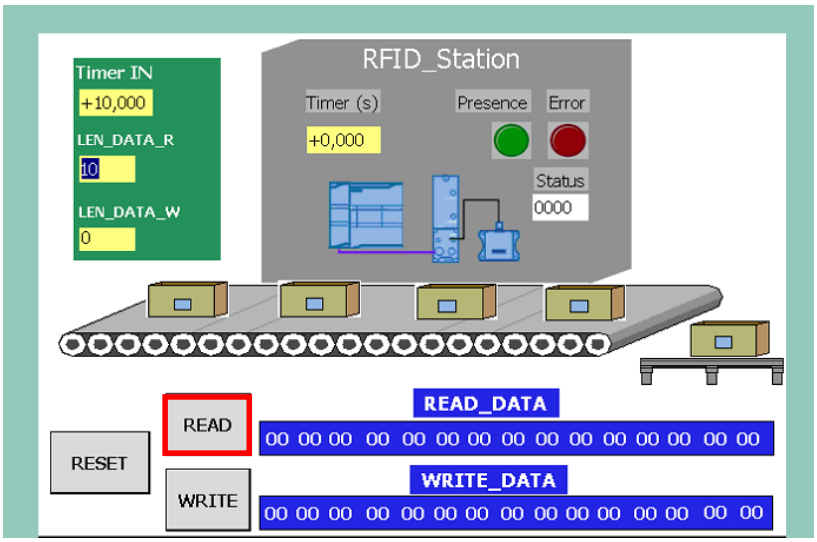
3	The read RFID data is available to you in the READ_DATA area.

Copyright © Siemens AG 2012 All rights reserved

5.5 Writing RFID data to the transponder

The table below lists instructions for writing RFID data to the transponder.

Table 5-3

No.	Procedure
1	In the input fields, enter the values relevant to writing the RFID data. 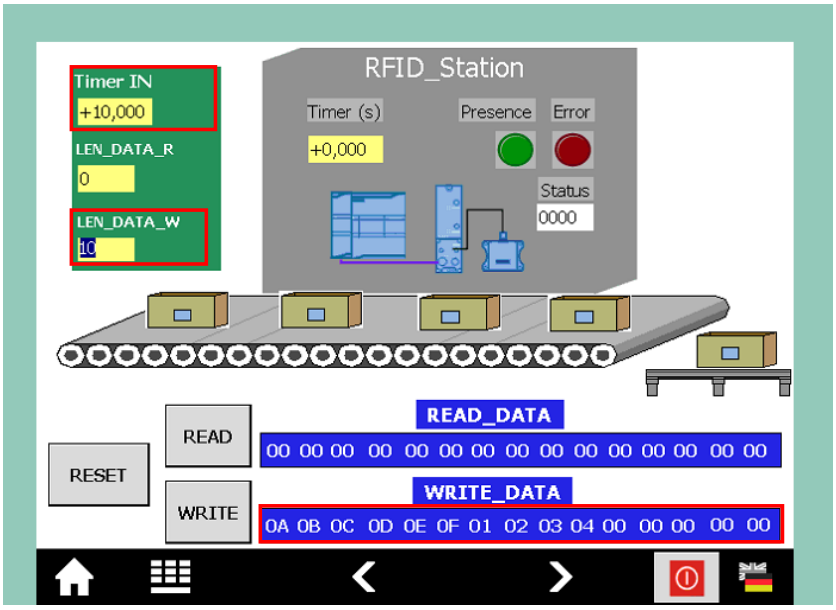
2	Click on the WRITE button. 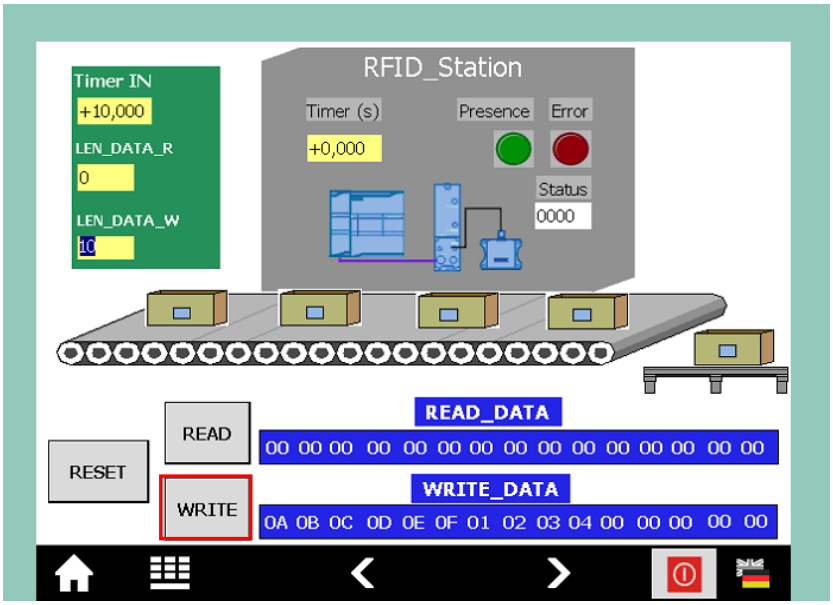

Copyright © Siemens AG 2012 All rights reserved

5.6 Error while reading RFID data

An error while operating the application can have the following causes:

- Invalid input parameters
- No transponder in the reader's field
- Abnormal termination of the read or write function

The table below shows an example of such a situation.

Table 5-4

No.	Procedure
1	In the input fields, enter the values relevant to reading the RFID data. 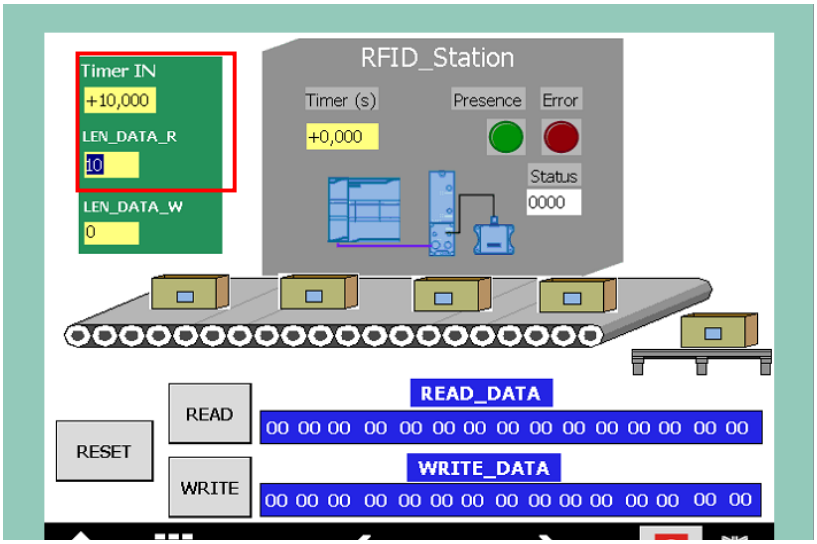
2	No transponder is in the reader's field.
3	Click on the READ button. 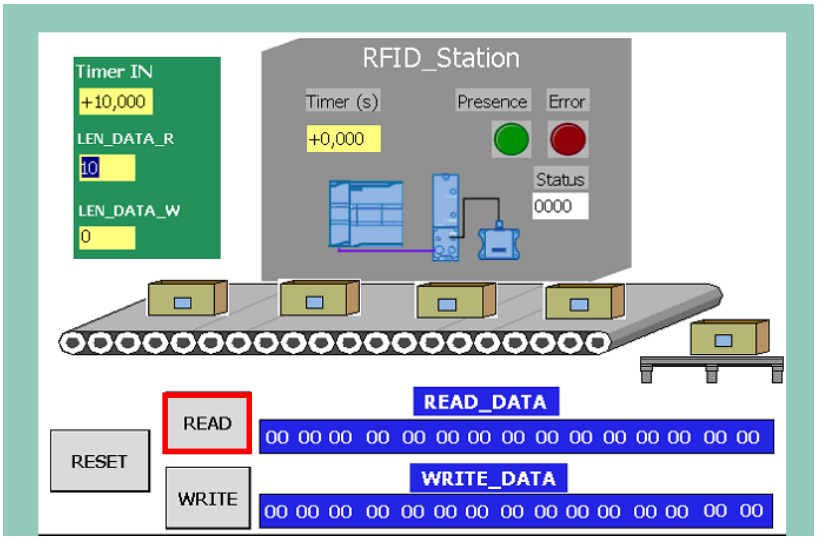

Copyright © Siemens AG 2012 All rights reserved

No.	Procedure
4	An error has occurred: Error_LED: ON Status: 8103 -> No transponder in the reader's field 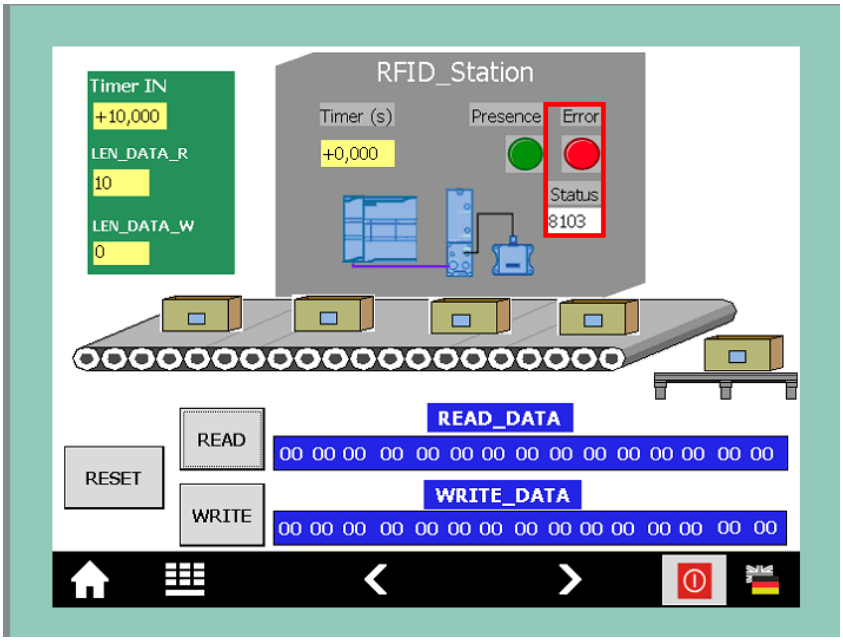
5	Place a transponder in the reader's field and once again click on the READ button. The error has been cleared. 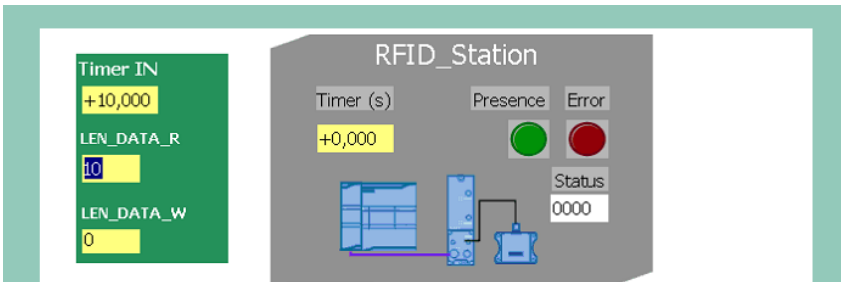
6	The read RFID data is available to you in the READ_DATA area. 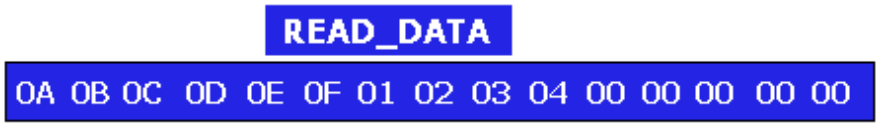

Copyright © Siemens AG 2012 All rights reserved

6 References

6.1 Bibliography

This list is by no means complete and only presents a selection of related references.

Table 6-1

	Topic	Title
/1/	STEP7 SIMATIC S7-1200	Automating with SIMATIC S7-1200 Author: Hans Berger Publicis Corporate Publishing ISBN: 978-3-89578-356-2

6.2 Internet links

This list is by no means complete and only provides a selection of useful information.

Table 6-2

	Topic	Title
\1\	Reference to the entry	http://support.automation.siemens.com/WW/view/en/63969277
\2\	Siemens Industry Online Support	http://support.automation.siemens.com
\3\	SIMATIC Sensors RF160C with FC44	http://support.automation.siemens.com/WW/view/en/42788808
\4\	SIMATIC Sensors RFID systems SIMATIC RF300	http://support.automation.siemens.com/WW/view/en/21738946
\5\	SIMATIC HMI HMI devices Basic Panels	http://support.automation.siemens.com/WW/view/en/31032678
\6\	SIMATIC S7 S7-1200 programmable controller	http://support.automation.siemens.com/WW/view/en/36932465

7 History

Table 7-1

Version	Date	Modifications
V1.0	12/2012	First version
V1.1	01/2017	Upgrade to TIA V14

Copyright © Siemens AG 2012 All rights reserved