SIEMENS



Edition 06/2023

OPERATING INSTRUCTIONS

SINAMICS

SINAMICS DCM

Control Module

www.siemens.com/drives

SIEMENS

SINAMICS

SINAMICS DCM Control Module

Operating Instructions

Firmware Version V1.5.1

06/2023
A5E34888669A

Preface

Safety instructions 1

Ordering information 2

Description 3

Technical data 4

Transport, unpacking, installation 5

Connecting 6

Additional system components 7

Commissioning 8

Operation 9

Descriptions of functions 10

Maintenance 11

Applications 12

Functional safety 13

Appendix A

Appendix B

Appendix C

Legal information

Warning notice system

This manual contains notices you have to observe in order to ensure your personal safety, as well as to prevent damage to property. The notices referring to your personal safety are highlighted in the manual by a safety alert symbol, notices referring only to property damage have no safety alert symbol. These notices shown below are graded according to the degree of danger.

⚠ **DANGER**
indicates that death or severe personal injury **will** result if proper precautions are not taken.

⚠ **WARNING**
indicates that death or severe personal injury **may** result if proper precautions are not taken.

⚠ **CAUTION**
indicates that minor personal injury can result if proper precautions are not taken.

NOTICE
indicates that property damage can result if proper precautions are not taken.

If more than one degree of danger is present, the warning notice representing the highest degree of danger will be used. A notice warning of injury to persons with a safety alert symbol may also include a warning relating to property damage.

Qualified Personnel

The product/system described in this documentation may be operated only by **personnel qualified** for the specific task in accordance with the relevant documentation, in particular its warning notices and safety instructions. Qualified personnel are those who, based on their training and experience, are capable of identifying risks and avoiding potential hazards when working with these products/systems.

Proper use of Siemens products

Note the following:

⚠ **WARNING**
Siemens products may only be used for the applications described in the catalog and in the relevant technical documentation. If products and components from other manufacturers are used, these must be recommended or approved by Siemens. Proper transport, storage, installation, assembly, commissioning, operation and maintenance are required to ensure that the products operate safely and without any problems. The permissible ambient conditions must be complied with. The information in the relevant documentation must be observed.

Trademarks

All names identified by ® are registered trademarks of Siemens AG. The remaining trademarks in this publication may be trademarks whose use by third parties for their own purposes could violate the rights of the owner.

Disclaimer of Liability

We have reviewed the contents of this publication to ensure consistency with the hardware and software described. Since variance cannot be precluded entirely, we cannot guarantee full consistency. However, the information in this publication is reviewed regularly and any necessary corrections are included in subsequent editions.

Siemens AG
Digital Industries
Postfach 48 48
90026 NÜRNBERG
GERMANY

A5E34888669A
Ⓟ 08/2023 Subject to change

Copyright © Siemens AG 2009 - 2023.
All rights reserved

Preface

Product name

The SINAMICS DCM product name is used in the documentation for SINAMICS DCM Control Modules.

This designation is often (frequently in circuit diagrams and topology arrangements) used in these instructions as an alternative designation for the combination of SINAMICS DCM Control Module and external converter power unit.

Intended use

The products described in this manual, together with software, accessories and options, form an electric drive to supply low-voltage DC motors or other DC loads for non-motor applications referenced in this manual. The products are intended for use in industrial environments. The products must be installed and maintained by professionals with sufficient knowledge to implement the safety and EMC measures in accordance with the specifications described in this manual and the recognized state-of-the-art engineering practices.

You may only use the products in compliance with the following requirements:

- All regulations and directives that are applicable at the place of final use, especially with regard to electrical safety, functional safety and electromagnetic compatibility.
- All instructions, notes, technical data and safety information contained in this manual and other supporting documentation.

Before using the products, you must perform a risk assessment of the entire application and implement appropriate system design measures to ensure the safety of persons, property and electromagnetic compatibility.

Open type products (IP00 / IP20) are intended for installation in control cabinets or housings, which offer the necessary protection.

Any use other than that expressly permitted is prohibited, and can result in unforeseen dangers.

Note

For non-motor applications, compliance with the limits for electromagnetic emissions specified in the IEC 61800-3 has not been verified. The system integrator or operator is responsible for EMC planning.

Device firmware version

As these Operating Instructions went to print, SINAMICS DCM Control Modules were being supplied from the factory with firmware version specified on the inside front page.

However, these Operating Instructions can, in principle, also apply to other firmware versions.

- **Older firmware versions:**
  It is possible that not all of the functions described here are actually available.
- **Newer firmware versions:**
  It is possible that SINAMICS DCM Control Modules may feature additional functions that are not described in these Operating Instructions. Do not change any parameters that you cannot find in the List Manual from their factory setting, and do not give parameters any values that are not specified in the List Manual.

The firmware version is displayed using r50060[6].

Example:
01050101 displayed on the BOP20 means 01.05.01.01 → Version 1.5, Service Pack 1, Hotfix 1

When required, you can obtain the current firmware from your local Siemens sales office.

Download of the current firmware version for registered users (https://support.industry.siemens.com/cs/ww/en/view/44029688)

Note

Hardware/firmware compatibility

The hardware version of the Control Unit (CUD) must be taken into account when updating the device firmware, see the following table.

The hardware version can be read from the label on the right-hand side of the CUD.

CUD (print on label)	Executable firmware versions
C98043-A7100-**L1**-... C98043-A7100-**L2**-... C98043-A7100-**L100**-... C98043-A7100-**L200**-...	1.1, 1.2, 1.3
C98043-A7100-**L3**-... C98043-A7100-**L4**-... C98043-A7100-**L103**-... C98043-A7100-**L204**-...	All versions
A5E...	All versions

Getting information about the product

There is a QR code on the product and on the product packaging. You can recognize the ID link by the frame with a black frame corner at the bottom right.



Scan the QR code using either a standard code scanner or the "Industry Online Support" app. When using a standard code scanner, you open the scanned ID link in an Internet browser that is provided on your device.

You can use the ID link to get product data, manuals, declarations of conformity, certificates and other information about your product.

SINAMICS DCM documentation available

SINAMICS DCM DC Converters Operating Instructions

contains all information on
ordering, installation, connecting, commissioning, maintaining, description of functions, and service

SINAMICS DCM Control Modules Operating Instructions

contains all information on
ordering, installation, connecting, commissioning, maintaining, description of functions, and service

SINAMICS DCM List Manual (for DC converters and control modules)

Contains
parameter list, function diagrams, list of faults and alarms

SINAMICS free function blocks, function description

Includes a general description, list of parameters, the function block diagrams as well as the list of faults and alarms.

Manuals and application notes on the Internet

The manuals and application documents are also available in the Internet:

Manuals and application notes (https://support.industry.siemens.com/cs/ww/en/ps/13298)

The list of general conditions available there include current supplements to the manuals. The notes included in the general condition lists have a higher priority than the statements made in the manuals.

FAQ in the Internet

FAQ (https://support.industry.siemens.com/cs/ww/en/ps/13298/faq)

Service

You can find information on our services and regional contact persons in the Internet - (https://support.industry.siemens.com/sc/ww/en/sc)

Technical Support

Our technical support can provide you with technical assistance for products, systems, and solutions:

Service (https://support.industry.siemens.com/sc/ww/en/sc)

Spare parts

You can find information on spare parts

- In catalog D23.1
- Via the electronic spare parts catalog Spares On Web, after entering the serial number and article number of your SINAMICS DCM in the Internet (registration required).
  Spares on Web (https://www.sow.siemens.com/)

Use of third-party products in this documentation

This documentation contains recommendations relating to third-party products. Siemens accepts the fundamental suitability of these third-party products. You can use equivalent products from other manufacturers.

Siemens does not accept any warranty for the use of third-party products.

Websites of third parties

This publication contains hyperlinks to websites of third parties. Siemens does not take any responsibility for the contents of these websites or adopt any of these websites or their contents as their own, because Siemens does not control the information on these websites and is also not responsible for the contents and information provided there. Use of these websites is at the risk of the person doing so.

Use of OpenSSL

This product contains software (https://www.openssl.org/) that has been developed by the OpenSSL project for use in the OpenSSL toolkit.

This product contains cryptographic software (mailto:eay@cryptsoft.com) created by Eric Young.

This product contains software (mailto:eay@cryptsoft.com) developed by Eric Young.

Compliance with the General Data Protection Regulation

Siemens respects the principles of data protection, in particular the data minimization rules (privacy by design).

For this product, this means:
The product does not process neither store any person-related data, only technical function data (e.g. time stamps). If the user links these data with other data (e.g. shift plans) or if he stores person-related data on the same data medium (e.g. hard disk), thus personalizing these data, he has to ensure compliance with the applicable data protection stipulations.

Further Internet links

Generic station description file (GSD) for

PROFIBUS (https://support.industry.siemens.com/cs/ww/en/view/98206128)

PROFINET (https://support.industry.siemens.com/cs/ww/en/view/98207877)

Table of contents

Preface ... **3**

1 Safety instructions ... **21**

1.1 General safety instructions ... 21
1.2 Fundamental safety instructions for functional safety ... 26
1.3 Hearing protection ... 27
1.4 Warning note relating to the off button of the AOP30 ... 27
1.5 ESD-sensitive components ... 27
1.6 Security information ... 28
1.7 Industrial security ... 28
1.8 Residual risks of power drive systems ... 29

2 Ordering information ... **31**

2.1 Device article numbers ... 31
2.2 Rating plates, packaging label ... 31
2.3 Ordering information for options and accessories ... 32

3 Description ... **39**

4 Technical data ... **43**

4.1 Environmental conditions ... 43
4.2 Unit data ... 44

5 Transport, unpacking, installation ... **47**

5.1 Transport, unpacking ... 47
5.2 Installation ... 47
5.2.1 Dimension drawings ... 47
5.2.2 Dividing the unit ... 55
5.2.3 Removal/Installation and division of modules ... 57
5.2.3.1 Removing modules ... 57
5.2.3.2 Firing pulse transformer module ... 59
5.2.3.3 Fuse monitoring and voltage measurement ... 62
5.2.4 Installing options and accessories ... 63
5.2.4.1 AOP30 operator panel ... 63
5.2.4.2 Fuse monitoring distributor ... 63
5.2.4.3 Installing a second CUD ... 64

6 Connecting ... **67**

6.1 Instructions for EMC-compliant drive installation ... 68
6.1.1 Basic information about EMC ... 68
6.1.2 EMC-compliant drive installation (installation instructions) ... 72

6.1.3 Arranging components for converter units ... 77
6.1.4 Radio interference suppression filter ... 78
6.1.5 Information on line-side harmonics produced by converter units in a fully-controlled two-pulse bridge circuit configuration (B6C and (B6)A(B6)C) ... 79
6.1.6 Data on the line-side harmonics from converter units in a fully-controlled AC bridge circuit B2C ... 81
6.1.7 Electromagnetic fields at the workplace ... 81

6.2 Cable routing in the device ... 82

6.3 Block diagram with connection suggestion ... 87

6.4 Connecting the external power unit ... 90

6.5 Division options ... 96

6.6 Measurement of the armature current ... 109
6.6.1 General information ... 109
6.6.2 Current measurement with two current transformers on the line side ... 110
6.6.3 Current measurement via terminal block XB-1 to XB-4 with external measuring circuit ... 112
6.6.3.1 External current transformers in V-circuit with +1 V at rated armature DC current ... 112
6.6.3.2 External current transformers in V-circuit with +10 V at rated armature DC current ... 113
6.6.3.3 Differential input for +/-10 V at rated armature DC current ... 114
6.6.3.4 Input for +/-1 V at rated armature DC current ... 114
6.6.4 External current measurement via X21A or X_I_IST ... 115
6.6.5 Offset correction via XN1 ... 116
6.6.6 Information on the differential input, control limits, and grounding ... 116

6.7 Connecting the firing pulse transformers ... 118
6.7.1 General information ... 118
6.7.2 Normal use (individual) ... 118
6.7.3 Parallel connection of firing pulses ... 119
6.7.4 External amplification of firing pulses ... 119

6.8 Connecting voltage measurement equipment ... 120

6.9 Connecting fuse monitoring equipment ... 120

6.10 Parallel connection of power units ... 121

6.11 Field supply ... 123

6.12 Commutating reactors ... 123

6.13 Fuses ... 127

6.14 Arrangement of printed circuit boards ... 128

6.15 Arrangement of customer connections (connector terminals, Faston mounting tabs) ... 129

6.16 Connector assignment (terminals, Faston mounting tabs, ribbon cables) ... 137
6.16.1 Connecting the protective conductor ... 138
6.16.2 Field circuit ... 139
6.16.3 Electronic power supply ... 139
6.16.4 Open-loop and closed-loop control section ... 139
6.16.4.1 Terminals on the Connector Board ... 140
6.16.4.2 Using a pulse encoder with SINAMICS DCM ... 143
6.16.4.3 Assignment of electronics terminals at the Power Interface ... 146
6.16.4.4 Serial interface to AOP30/USS interface ... 148
6.16.4.5 PROFIBUS connection ... 149

6.16.4.6 DRIVE-CLiQ connection ... 149
6.16.4.7 Parallel interface ... 150
6.16.4.8 Terminal assignment for option G63 ... 150
6.16.4.9 Connectors at the power interface ... 152
6.16.4.10 CompactFlash Card slot ... 152
6.16.5 Voltage measurement equipment ... 154
6.16.6 Fuse monitoring equipment ... 155
6.16.7 Firing pulse transformers ... 156
6.16.8 Firing pulse ... 159
6.16.9 Ribbon cables ... 162
6.16.10 Assignment of the RS485 cable to the AOP30 ... 167
6.16.11 Terminal assignment functional safety ... 168

7 Additional system components ... 169

7.1 Option Board: CBE20 Communication Board Ethernet ... 170
7.1.1 Description ... 170
7.1.2 Safety instructions ... 170
7.1.3 Interface description ... 171
7.1.3.1 Overview ... 171
7.1.3.2 X1400 Ethernet interface ... 171
7.1.4 Meaning of the LEDs ... 172
7.1.5 Installation ... 174
7.1.6 Technical data ... 174

7.2 Sensor Module Cabinet-Mounted SMC10 ... 175
7.2.1 Description ... 175
7.2.2 Safety instructions ... 175
7.2.3 Interface description ... 177
7.2.3.1 Overview ... 177
7.2.3.2 X500 DRIVE-CLiQ interface ... 178
7.2.3.3 X524 Electronics power supply ... 178
7.2.3.4 X520 Encoder system interface ... 179
7.2.4 Connection example ... 180
7.2.5 Meaning of the LED ... 180
7.2.6 Dimension drawing ... 181
7.2.7 Installation ... 181
7.2.8 Technical data ... 182

7.3 Sensor Module Cabinet-Mounted SMC30 ... 184
7.3.1 Description ... 184
7.3.2 Safety instructions ... 184
7.3.3 Interface description ... 187
7.3.3.1 Overview ... 187
7.3.3.2 X500 DRIVE-CLiQ interface ... 188
7.3.3.3 X524 Electronics power supply ... 188
7.3.3.4 X520 Encoder system interface ... 189
7.3.3.5 X521/X531 Alternative encoder system interface ... 190
7.3.4 Connection examples ... 191
7.3.5 Meaning of the LEDs ... 193
7.3.6 Dimension drawing ... 194
7.3.7 Installation ... 194
7.3.8 Protective conductor connection and shield support ... 196
7.3.9 Technical data ... 196

7.4 Terminal Module TM15 200
7.4.1 Description 200
7.4.2 Safety instructions 201
7.4.3 Interface description 202
7.4.3.1 Overview 202
7.4.3.2 X500/X501 DRIVE-CLiQ interfaces 203
7.4.3.3 X524 Electronics power supply 203
7.4.3.4 X520 Bidirectional digital inputs/outputs 204
7.4.3.5 X521 Bidirectional digital inputs/outputs 205
7.4.3.6 X522 Bidirectional digital inputs/outputs 205
7.4.4 Connection example 206
7.4.5 Meaning of the LED 207
7.4.6 Dimension drawing 208
7.4.7 Installation 208
7.4.8 Protective conductor connection and shield support 209
7.4.9 Connector coding 210
7.4.10 Technical data 212

7.5 Terminal Module TM31 213
7.5.1 Description 213
7.5.2 Safety instructions 214
7.5.3 Interface description 216
7.5.3.1 Overview 216
7.5.3.2 X500/X501 DRIVE-CLiQ interfaces 217
7.5.3.3 X524 Electronics power supply 218
7.5.3.4 X520, X530 Digital inputs 218
7.5.3.5 X521 Analog inputs 220
7.5.3.6 Analog inputs current/voltage switch 220
7.5.3.7 X522 Analog outputs/temperature sensor 221
7.5.3.8 X540 Auxiliary voltage for the digital inputs 222
7.5.3.9 X541 Bidirectional digital inputs/outputs 223
7.5.3.10 X542 Relay outputs 224
7.5.4 Connection example 225
7.5.5 Meaning of the LED 226
7.5.6 Dimension drawing 227
7.5.7 Installation 227
7.5.8 Protective conductor connection and shield support 228
7.5.9 Connector coding 230
7.5.10 Technical data 230

7.6 Terminal Module TM150 231
7.6.1 Description 231
7.6.2 Safety instructions 232
7.6.3 Interface description 233
7.6.3.1 Overview 233
7.6.3.2 X500/X501 DRIVE-CLiQ interfaces 234
7.6.3.3 X524 Electronics power supply 234
7.6.3.4 X531-X536 Temperature sensor inputs 235
7.6.4 Connection examples 237
7.6.5 Meaning of the LED 239
7.6.6 Dimension drawing 240
7.6.7 Installation 240
7.6.8 Protective conductor connection and shield support 242

7.6.9 Technical data ... 242

8 Commissioning ... 243

8.1 Commissioning checklist ... 243

8.2 Switching on ... 245

8.3 Commissioning using the BOP20 Operator Panel ... 246
8.3.1 Requirements ... 246
8.3.2 Commissioning steps ... 247

8.4 Commissioning using the AOP30 Operator Panel ... 253
8.4.1 First commissioning ... 253
8.4.1.1 Running-up for the first time ... 254
8.4.1.2 Full drive commissioning ... 255
8.4.2 Status after commissioning ... 259
8.4.3 Parameter reset to factory settings ... 259

8.5 Commissioning with the STARTER commissioning tool ... 259
8.5.1 STARTER commissioning tool ... 259
8.5.1.1 Installing the STARTER commissioning tool ... 260
8.5.1.2 Layout of the STARTER user interface ... 260
8.5.2 Procedure for commissioning with STARTER ... 261
8.5.2.1 Creating the project ... 261
8.5.2.2 Configuring a drive unit ... 269
8.5.2.3 Starting the drive project ... 290

8.6 Activating function modules ... 294
8.6.1 Offline activation via STARTER ... 295
8.6.2 Online activation via parameters ... 296

8.7 Commissioning optional additional modules ... 297
8.7.1 Terminal Modules (TM31, TM15, TM150) ... 298
8.7.1.1 Commissioning with STARTER ... 298
8.7.1.2 Commissioning via parameter assignment ... 300
8.7.2 Encoder evaluation (SMC10, SMC30) ... 301
8.7.2.1 Add/commissioning (with STARTER) ... 302
8.7.2.2 Removal (with STARTER) ... 306
8.7.3 CBE20 Communication Board Ethernet ... 306
8.7.3.1 Adding online into the drive ... 306
8.7.3.2 Adding offline in STARTER ... 307
8.7.3.3 Deleting from the drive online ... 308
8.7.3.4 Deleting offline with STARTER ... 308

8.8 Drive optimization ... 308

8.9 Manual optimization ... 315
8.9.1 Optimization of closed-loop armature current control ... 316
8.9.2 Optimization of closed-loop field-current control ... 318
8.9.3 Optimizing the speed controller ... 319

9 Operation ... 321

9.1 Basic information ... 321
9.1.1 Parameter ... 321
9.1.2 Data sets ... 324
9.1.2.1 Function diagrams and parameters ... 326

9.1.2.2 Handling data sets ... 327
9.1.3 Drive objects ... 328
9.1.4 Memory card functions ... 329
9.1.5 BICO technology: Interconnecting signals ... 335
9.1.5.1 Binectors, connectors ... 335
9.1.5.2 Interconnecting signals using BICO technology ... 336
9.1.5.3 Internal encoding of the binector/connector output parameters ... 337
9.1.5.4 Example: Interconnecting digital signals ... 338
9.1.5.5 Notes on BICO technology ... 338

9.2 Parameterizing using the BOP20 (Basic Operator Panel 20) ... 339
9.2.1 General information on BOP20 ... 339
9.2.2 Displays and operation with the BOP20 ... 342
9.2.3 Displaying faults and alarms ... 347
9.2.4 Controlling the drive using the BOP20 ... 348

9.3 Controlling via the AOP30 operator panel ... 348
9.3.1 Overview and menu structure ... 349
9.3.2 Operation screen menu ... 352
9.3.3 Parameterization menu ... 353
9.3.4 Fault/alarm memory menu ... 354
9.3.5 Commissioning/service menu ... 355
9.3.5.1 Drive commissioning ... 355
9.3.5.2 Device commissioning ... 356
9.3.5.3 AOP settings ... 356
9.3.5.4 AOP30 diagnostics ... 360
9.3.6 Sprachauswahl / Language Selection ... 361
9.3.7 Operation via the operator panel (LOCAL mode) ... 362
9.3.7.1 LOCAL/REMOTE key ... 362
9.3.7.2 ON key / OFF key ... 363
9.3.7.3 CCW/CW changeover ... 363
9.3.7.4 Jogging ... 363
9.3.7.5 Increase setpoint / decrease setpoint ... 364
9.3.7.6 AOP setpoint ... 364
9.3.7.7 Inhibiting AOP Local mode ... 365
9.3.7.8 Acknowledging errors at the AOP ... 365
9.3.7.9 Timeout monitoring ... 365
9.3.7.10 Operating lock / Parameterization inhibit ... 365
9.3.8 Faults and alarms ... 367
9.3.9 Saving the parameters permanently ... 368
9.3.10 Parameterization error ... 369
9.3.11 Assigning parameters to make AOP30 time-of-day master ... 369

10 Descriptions of functions ... 371

10.1 Inputs/outputs ... 371
10.1.1 Overview of inputs/outputs ... 371
10.1.2 Digital inputs/outputs ... 372
10.1.3 Analog inputs ... 372
10.1.4 Analog outputs ... 373

10.2 Communication, IT security ... 373
10.2.1 SINAMICS network settings ... 374
10.2.2 Time synchronization ... 376
10.2.2.1 Overview ... 376

10.2.2.2 Setting SINAMICS time synchronization ... 378
10.2.2.3 Messages and parameters ... 379

10.3 Communication according to PROFIdrive ... 379
10.3.1 Application classes ... 381
10.3.2 Cyclic communication ... 384
10.3.2.1 Telegrams and process data ... 384
10.3.2.2 Description of control words and setpoints ... 389
10.3.2.3 Description of status words and actual values ... 393
10.3.2.4 Control and status words for encoders ... 398
10.3.2.5 Extended encoder evaluation ... 406
10.3.2.6 Central control and status words ... 407
10.3.2.7 Diagnostics channels for cyclic communication ... 409
10.3.3 Parallel operation of communication interfaces ... 410
10.3.4 Acyclic communication ... 413
10.3.4.1 General information about acyclic communication ... 413
10.3.4.2 Structure of requests and responses ... 415
10.3.4.3 Determining the drive object numbers ... 421
10.3.4.4 Example 1: Read parameter ... 421
10.3.4.5 Example 2: Writing to parameters (multi-parameter request) ... 423

10.4 Communication via PROFIBUS DP ... 427
10.4.1 PROFIBUS connection ... 427
10.4.2 General information about PROFIBUS ... 428
10.4.2.1 General information about PROFIBUS for SINAMICS ... 428
10.4.2.2 Example of a telegram structure for cyclic data acquisition ... 431
10.4.3 Commissioning PROFIBUS ... 432
10.4.3.1 Setting the PROFIBUS interface ... 432
10.4.3.2 PROFIBUS interface during operation ... 433
10.4.3.3 Commissioning PROFIBUS ... 435
10.4.3.4 Diagnostics options ... 435
10.4.3.5 SIMATIC HMI addressing ... 436
10.4.3.6 Monitoring telegram failure ... 438
10.4.4 Direct data exchange ... 439
10.4.4.1 Setpoint assignment in the subscriber ... 441
10.4.4.2 Activating/parameterizing direct data exchange ... 441
10.4.4.3 Commissioning of the PROFIBUS direct data exchange ... 442
10.4.4.4 GSD in operation ... 453
10.4.4.5 Diagnostics of the PROFIBUS direct data exchange in STARTER ... 454
10.4.5 Messages via diagnostics channels ... 455

10.5 Communication via PROFINET IO ... 458
10.5.1 Activating online mode: STARTER via PROFINET IO ... 458
10.5.2 General information about PROFINET IO ... 464
10.5.2.1 Real-time (RT) and isochronous real-time (IRT) communication ... 465
10.5.2.2 Addresses ... 466
10.5.2.3 Data transfer ... 468
10.5.2.4 Communication channels for PROFINET ... 469
10.5.3 Drive control with PROFINET ... 470
10.5.3.1 Media redundancy ... 472
10.5.4 RT classes for PROFINET IO ... 472
10.5.5 PROFINET GSDML ... 477
10.5.6 Communication with CBE20 ... 478
10.5.7 Messages via diagnostics channels ... 479

10.5.8 Support of I&M data sets 1...4 ... 482

10.6 Communication via SINAMICS Link ... 484
10.6.1 Basic principles of SINAMICS Link ... 484
10.6.2 Topology ... 486
10.6.3 Configuring and commissioning ... 488
10.6.4 Example ... 492
10.6.5 Communication failure when booting or in cyclic operation ... 494
10.6.6 Examples: Transmission times for SINAMICS Link ... 495
10.6.7 Function diagrams and parameters ... 495

10.7 Communication via EtherNet/IP (EIP) ... 496
10.7.1 Components to connect SINAMICS DCM to EtherNet/IP ... 496
10.7.2 Configuration of SINAMICS DCM for EtherNet/IP ... 497
10.7.3 EtherNet/IP communication with the SINAMICS DCM ... 498
10.7.3.1 "Implicit messaging" – cyclic communication as I/O slave ... 499
10.7.3.2 "Explicit messaging" – acyclic or event-driven communication ... 502
10.7.4 Examples when using a Rockwell PLC ... 511
10.7.4.1 Configuration of a Rockwell PLC for the communication with SINAMICS DCM ... 511
10.7.4.2 Reading and writing parameters using the Parameter Object (Class code 4xx hex) ... 514
10.7.5 Messages and parameters ... 516

10.8 Communication via MODBUS TCP ... 517
10.8.1 Overview ... 517
10.8.2 Configuring Modbus TCP via interface X1400 ... 519
10.8.3 Mapping tables ... 520
10.8.4 Read and write access using function codes ... 523
10.8.5 Communication via data set 47 ... 525
10.8.5.1 Communication details ... 526
10.8.5.2 Examples: Read parameter ... 527
10.8.5.3 Examples: Write parameter ... 528
10.8.6 Communication sequence ... 529
10.8.7 Messages and parameters ... 530

10.9 Serial interface with USS protocol ... 531

10.10 Switch on, switch off, enable ... 533
10.10.1 Switch on/Switch off (ON/OFF1) - control word bit 0 ... 533
10.10.2 OFF2 (disconnection) - control word bit 1 ... 535
10.10.3 OFF3 (quick stop) - control word bit 2 ... 535
10.10.4 Operation enable (enable) - control word bit 3 ... 537

10.11 Safety shutdown (E-STOP) ... 538

10.12 Setpoint channel ... 539
10.12.1 Ramp-function generator ... 539
10.12.2 Jogging ... 544
10.12.3 Creep ... 545
10.12.4 Fixed setpoint ... 546

10.13 Encoder evaluation ... 546
10.13.1 Actual speed values ... 547
10.13.2 Control and status words for encoders ... 548

10.14 Speed controller ... 548

10.15 Adaptation of the armature and field current controller ... 551

10.16 Technology controller 554
10.17 Switch-on command for holding or operational brake 557
10.18 Switching on auxiliary circuits 560
10.19 Operating hours counter, unit fan 561
10.20 Thermal overload protection for the DC motor (I2t monitoring of the motor) 562
10.21 Measuring the motor temperature 565
10.22 Speed-dependent current limiting 567
10.23 Thyristor blocking voltage calculation 569
10.24 Automatic restart 571
10.25 Operation on a single-phase line supply 571
10.26 Connecting units in parallel and in series 573
10.26.1 6-pulse parallel connection 576
10.26.1.1 Basic topology 576
10.26.1.2 Extended topology 576
10.26.1.3 Operating modes 577
10.26.1.4 Parameterization 579
10.26.2 12-pulse parallel connection 581
10.26.3 6-pulse series connection 584
10.26.4 6-pulse series connection: controlled converter + uncontrolled converter 587
10.26.5 12-pulse series connection 588
10.26.6 12-pulse series connection: controlled converter + uncontrolled converter 591
10.26.7 Switchover of the power unit topology - option S50 592
10.27 Field reversal 592
10.27.1 Direction of rotation reversal using field reversal 593
10.27.2 Braking using field reversal 594
10.28 Serial interface with peer-to-peer protocol 597
10.28.1 Examples of peer-to-peer connections 600
10.29 Expanding the SINAMICS DCM to include a second CUD 602
10.30 Terminal Module Cabinet TMC (option G63) 604
10.31 Runtime (operating hours counter) 605
10.32 Diagnostics 605
10.32.1 Diagnostic memory 605
10.32.2 Trend recorder function 606
10.32.3 Thyristor diagnostics 607
10.32.4 Description of the LEDs on the CUD 609
10.32.5 Diagnostics via STARTER 611
10.32.5.1 Function generator 612
10.32.5.2 Trace function 614
10.32.6 Faults and alarms 621
10.32.6.1 General information 621
10.32.6.2 Buffer for faults and alarms 623
10.32.6.3 Configuring messages 626
10.32.6.4 Parameters and function diagrams for faults and alarms 628
10.32.6.5 Forwarding faults and alarms 628

10.32.7 Simulation mode ... 629

10.33 CPU time load with SINAMICS DCM ... 630
10.33.1 Maximum configuration ... 632
10.33.2 Computation examples ... 632

10.34 Free function blocks ... 633

10.35 Drive Control Chart (DCC) ... 635
10.35.1 Loading the DCC technology option into the drive unit memory ... 636
10.35.2 CPU time load through DCC ... 638
10.35.3 Memory load through DCC ... 639
10.35.4 Backing up the DCC diagrams ... 641

10.36 Write and know-how protection ... 642
10.36.1 Write protection ... 642
10.36.2 Know-how protection ... 644
10.36.2.1 Copy protection ... 646
10.36.2.2 Configuring know-how protection ... 647
10.36.2.3 Loading know-how protected data to the file system ... 651
10.36.3 Overview of important parameters ... 654

11 Maintenance ... 655

11.1 Upgrading the device firmware ... 655
11.1.1 Upgrading the device firmware ... 656
11.1.2 Upgrading the DCC technology option ... 659

11.2 Replacing the CUD ... 662

11.3 Replacing the back-up battery in the AOP30 operator panel ... 665

12 Applications ... 667

12.1 Using SINAMICS DCM in shipbuilding ... 667

12.2 Use of the SINAMICS DCM in galvanizing and dip-painting plants ... 667

12.3 Using SINAMICS DCM as thyristor controller in heating applications ... 669

13 Functional safety ... 671

13.1 Emergency Off and Emergency Stop ... 672

13.2 Safety functions according to IEC 61800-5-2 ... 673
13.2.1 Safe Torque Off (STO) ... 674
13.2.2 Safe Stop 1 (SS1-t, time controlled) ... 674

13.3 Safety functions of the SINAMICS DCM ... 675
13.3.1 Fundamentals and technical specifications ... 675
13.3.2 Performance characteristics of SINAMICS DCM for safety-related evaluation ... 676
13.3.3 Performance characteristics of functional safety application examples ... 676
13.3.4 Standards ... 677

13.4 Functional safety: Activation for SINAMICS DCM ... 678

13.5 Application examples ... 678
13.5.1 Description of application examples ... 679
13.5.2 General information on the application examples ... 681
13.5.3 Application examples STO ... 684
13.5.3.1 Timing of the shutdown with STO ... 684

13.5.3.2 STO with power contactor in the armature circuit, controlled by mechanical switches/ relay outputs ... 685
13.5.3.3 STO with circuit breaker in the armature circuit, controlled by mechanical switches/relay outputs ... 686
13.5.3.4 STO with power contactor in the armature circuit, controlled by semiconductor outputs ... 688
13.5.4 Application examples SS1-t ... 689
13.5.4.1 Timing of the shutdown with SS1-t ... 689
13.5.4.2 SS1-t with power contactor in the armature circuit, controlled by mechanical switches/ relay outputs ... 691
13.5.4.3 SS1-t with power contactor in the armature circuit, controlled by semiconductor outputs ... 692
13.6 Risk analysis and risk assessment ... 693
13.7 Validating/checking the safety functions ... 693
13.8 Diagnostics test / forced checking procedure ... 693
13.9 Circuit breakers and power contactors ... 694
A Appendix A ... 701
A.1 Certifications and standards ... 701
A.2 List of abbreviations ... 702
A.3 Environmental compatibility ... 710
A.4 Servicing ... 710
B Appendix B ... 713
B.1 Runtimes of the DCC blocks for SINAMICS DCM ... 713
B.2 BOP20 status display during power-up ... 717
C Appendix C ... 719
C.1 Standards and regulations relating to functional safety ... 719
C.1.1 General information ... 719
C.1.1.1 Aims ... 719
C.1.1.2 Functional safety ... 719
C.1.2 Safety of machinery in Europe ... 720
C.1.2.1 Machinery Directive ... 720
C.1.2.2 Harmonized European Standards ... 721
C.1.2.3 Standards for implementing safety-related controllers ... 722
C.1.2.4 DIN EN ISO 13849-1 ... 723
C.1.2.5 IEC 62061 ... 724
C.1.2.6 Series of standards IEC 61508 (VDE 0803) ... 726
C.1.2.7 Risk analysis/assessment ... 726
C.1.2.8 Risk minimization ... 728
C.1.2.9 Residual risk ... 728
C.1.2.10 EC declaration of conformity ... 728
C.1.3 Machine safety in the USA ... 728
C.1.3.1 Minimum requirements of the OSHA ... 729
C.1.3.2 NRTL listing ... 729
C.1.3.3 NFPA 79 ... 730
C.1.3.4 ANSI B11 ... 730
C.1.4 Machine safety in Japan ... 731
C.1.5 Equipment regulations ... 731

C.1.6 Other safety-related issues 731
C.1.6.1 Information sheets from the various regulatory bodies 731
C.1.6.2 Additional references 732

Index 733

Safety instructions

1

1.1 General safety instructions



⚠ WARNING

Electric shock and danger to life due to other energy sources

Touching live components can result in death or serious injury.

- Only work on electrical equipment if you are appropriately qualified.
- Always observe the country-specific safety rules for all work.

Generally, the following steps apply when establishing safety:

1. Prepare for disconnection. Notify all those who will be affected by the procedure.
2. Isolate the drive system from the power supply and take measures to prevent it being switched back on again.
3. Wait until the discharge time specified on the warning labels has elapsed.
4. Check that there is no voltage between any of the power connections, and between any of the power connections and the protective conductor connection.
5. Check whether the existing auxiliary supply circuits are in a no-voltage state.
6. Ensure that the motors cannot move.
7. Identify all other dangerous energy sources, e.g. compressed air, hydraulic systems, or water. Switch the energy sources to a safe state.
8. Check that the correct drive system is completely locked.

After you have completed the work, restore the operational readiness by following the above steps in the reverse order.



⚠ WARNING

Electric shock due to connection to an unsuitable power supply

When equipment is connected to an unsuitable power supply, exposed components may carry a hazardous voltage that might result in serious injury or death.

- Only use power supplies that provide SELV (Safety Extra Low Voltage) or PELV (Protective Extra Low Voltage) output voltages for all connections and terminals of the electronics modules.



⚠ WARNING

Electric shock due to equipment damage

Improper handling may cause damage to equipment. For damaged devices, hazardous voltages can be present at the enclosure or at exposed components; if touched, this can result in death or severe injury.

- Ensure compliance with the limit values specified in the technical data during transport, storage and operation.
- Do not use any damaged devices.



⚠ WARNING

Electric shock due to unconnected cable shield

Hazardous touch voltages can occur through capacitive cross-coupling due to unconnected cable shields.

- Connect cable shields and unused conductors of power cables (e.g. brake conductors) at least on one side to the grounded housing potential.



⚠ WARNING

Electric shock if there is no ground connection

For missing or incorrectly implemented protective conductor connection for devices with protection class I, high voltages can be present at open, exposed parts, which when touched, can result in death or severe injury.

- Ground the device in compliance with the applicable regulations.



⚠ WARNING

Arcing when a plug-in connection is opened during operation

Opening a plug-in connection when a system is in operation can result in arcing that may cause serious injury or death.

- Only open plug-in connections when the equipment is in a voltage-free state, unless it has been explicitly stated that they can be opened in operation.



⚠ WARNING

Electric shock due to residual charges in power components

Because of the capacitors, a hazardous voltage is present for up to 5 minutes after the power supply has been switched off. Contact with live parts can result in death or serious injury.

- Wait for 5 minutes before you check that the unit really is in a no-voltage condition and start work.

NOTICE

Property damage due to loose power connections

Insufficient tightening torques or vibration can result in loose power connections. This can result in damage due to fire, device defects, or malfunctions.

- Tighten all power connections to the specified torque.
- Check all power connections at regular intervals, particularly after equipment has been transported.

⚠ WARNING

Spread of fire from built-in devices

In the event of fire outbreak, the enclosures of built-in devices cannot prevent the escape of fire and smoke. This can result in serious personal injury or property damage.

- Install built-in units in a suitable metal cabinet in such a way that personnel are protected against fire and smoke, or take other appropriate measures to protect personnel.
- Ensure that smoke can only escape via controlled and monitored paths.

⚠ WARNING

Active implant malfunctions due to electromagnetic fields

During operation, converters generate electromagnetic fields (EMF). Electromagnetic fields may interfere with active implants, e.g. pacemakers. People with active implants in the immediate vicinity of an converter are at risk.

- As operator of an EMF-emitting installation, carefully assess the individual risks of persons with active implants.
- Observe the data on EMF emission provided in the product documentation.

⚠ WARNING

Unexpected movement of machines caused by radio devices or mobile phones

Using radio devices or mobile telephones in the immediate vicinity of the components can result in equipment malfunction. Malfunctions may impair the functional safety of machines and can therefore put people in danger or lead to property damage.

- Therefore, if you move closer than 20 cm to the components, be sure to switch off radio devices or mobile telephones.
- Use the "SIEMENS Industry Online Support App" only on equipment that has already been switched off.

⚠ WARNING

Motor fire in the event of insulation overload

There is higher stress on the motor insulation through a ground fault in an IT system. If the insulation fails, it is possible that death or severe injury can occur as a result of smoke and fire.

- Use a monitoring device that signals an insulation fault.
- Correct the fault as quickly as possible so the motor insulation is not overloaded.

⚠ WARNING

Fire due to inadequate ventilation clearances

Inadequate ventilation clearances can cause overheating of components with subsequent fire and smoke. This can cause severe injury or even death. This can also result in increased downtime and reduced service lives for devices/systems.

- Ensure compliance with the specified minimum clearance as ventilation clearance for the respective component.

⚠ WARNING

Unrecognized dangers due to missing or illegible warning labels

Dangers might not be recognized if warning labels are missing or illegible. Unrecognized dangers may cause accidents resulting in serious injury or death.

- Check that the warning labels are complete based on the documentation.
- Attach any missing warning labels to the components, where necessary in the national language.
- Replace illegible warning labels.

NOTICE

Device damage caused by incorrect voltage/insulation tests

Incorrect voltage/insulation tests can damage the device.

- Before carrying out a voltage/insulation test of the system/machine, disconnect the devices as all converters and motors have been subject to a high voltage test by the manufacturer, and therefore it is not necessary to perform an additional test within the system/machine.

⚠ CAUTION

Hot component surfaces

Certain components (e.g. the heat sink and reactor) can become very hot during operation. These components can remain hot for a long time after operation. Contact can result in serious injury, such as skin burns.

- Do not touch hot components, even after you have switched off the device.

⚠ WARNING

Unexpected movement of machines caused by inactive safety functions

Inactive or non-adapted safety functions can trigger unexpected machine movements that may result in serious injury or death.

- Observe the information in the appropriate product documentation before commissioning.
- Carry out a safety inspection for functions relevant to safety on the entire system, including all safety-related components.
- Ensure that the safety functions used in your drives and automation tasks are adapted and activated using the appropriate parameterizing.
- Carry out a function test.
- Only put your plant into live operation once you have guaranteed that the functions relevant to safety are running correctly.

⚠ WARNING

Malfunctions of the machine as a result of incorrect or changed parameterization

As a result of incorrect or changed parameterization, machines can malfunction, which in turn can lead to injuries or death.

- Protect the parameterization against unauthorized access.
- Respond to possible malfunctions by taking suitable measures, e.g. EMERGENCY STOP or EMERGENCY OFF.

1.2 Fundamental safety instructions for functional safety

Additional safety information and residual risks not specified in this chapter are included in the relevant sections of these operating instructions.

⚠ DANGER

Minimizing risks through functional safety

Functional safety can reduce the risk for plants, systems and machines.

However, safe operation of plants, systems and machines with functional safety is only possible if the machine builder carefully observes the following points:

- He is extremely familiar with this technical user documentation, including the documented constraints, safety instructions and residual risks - and he complies with all of the instructions provided.
- He carefully and professionally designs, constructs and configures the system/machine. This must then be verified through careful and thorough acceptance tests carried out by qualified personnel and the results documented.
- He implements and validates all the measures required in accordance with the system/ machine risk analysis using the programmed and configured functions of functional safety.

The use of functional safety does not replace the plant or machine risk assessment carried out by the machine manufacturer as required by the EC machinery directive!
In addition to the use of functional safety, additional risk reduction measures must be implemented.

⚠ WARNING

Danger to life as a result of undesirable motor movement when automatically restarting

The Emergency Stop function must bring the machine to a standstill according to stop category 0 or 1 (STO or SS1) (IEC 60204-1).
It is not permissible that the motor automatically restarts after an Emergency Stop, as this represents danger to life as a result of the associated undesirable motor motion.
When individual safety functions are deactivated, an automatic restart is permitted under certain circumstances depending on the risk analysis (except when Emergency Stop is reset). An automatic start is permitted when a protective door is closed, for example.

- For the cases listed above, ensure that an automatic restart is absolutely not possible.

⚠ WARNING

Danger to life as a result of undesirable motor motion when the system powers up and the drives are activated after changing or replacing hardware and/or software

After hardware and/or software components have been modified or replaced, it is only permissible for the system to run up and the drives to be activated with the protective devices closed. Personnel shall not be present within the danger zone.

- It may be necessary to carry out a partial or complete acceptance test or a simplified functional test after having made certain changes or replacements.
- Before personnel may re-enter the hazardous area, all of the drives should be tested to ensure that they exhibit stable control behavior by briefly moving them in both the plus and minus directions (+/-).

1.3 Hearing protection

⚠ WARNING

Damage to hearing due to lack of hearing protection

In general, wearing hearing protection is required or recommended for a sound level of ≥ 80 dB(A).

- Note the regional regulations for the use of hearing protection.

1.4 Warning note relating to the off button of the AOP30

⚠ WARNING

No Emergency Stop, Emergency Off or STO function

The OFF button on the AOP30 operator panel does not comply with the requirements relating to Emergency Stop, Emergency Off or STO function (functional safety)!

- Only use the OFF button of the AOP30 for switching on or switching off in operation.

1.5 ESD-sensitive components

Electrostatic-sensitive devices (ESD) are individual components, integrated circuits, modules or devices that may be damaged by either electric fields or electrostatic discharge.



NOTICE

Damage caused by electric fields or electrostatic discharge

Electric fields or electrostatic discharge can cause malfunctions through damaged individual components, integrated circuits, modules or devices.

- Only pack, store, transport and send electronic components, modules or devices in their original packaging or in other suitable materials, e.g. conductive foam rubber of aluminum foil.
- Only touch components, modules and devices when you are grounded by one of the following methods:
  - Wearing an ESD wrist strap
  - Wearing ESD shoes or ESD grounding straps in ESD areas with conductive flooring
- Only place electronic components, modules or devices on conductive surfaces (table with ESD surface, conductive ESD foam, ESD packaging, ESD transport container).

The necessary ESD protective measures are elucidated once again in the following illustration:

Seated Standing Seated/standing

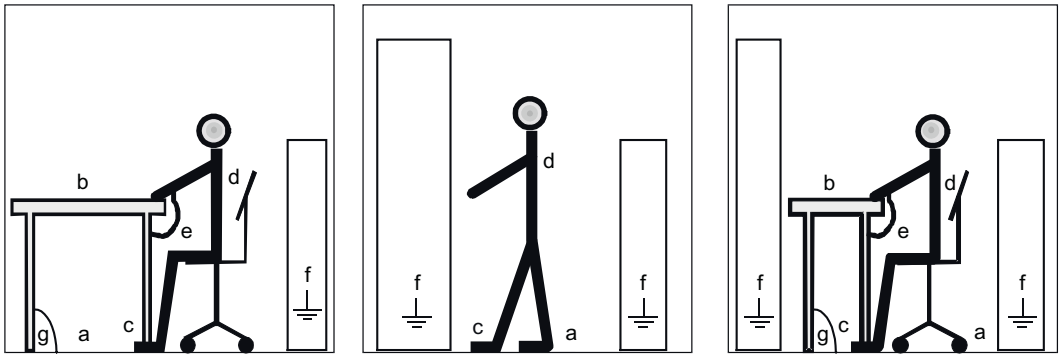

a	Conductive floor	e	ESD wrist strap
b	ESD Table	f	Cabinet ground connection
c	ESD footwear	g	Contact with conductive flooring
d	ESD overall		

1.6 Security information

Siemens provides products and solutions with industrial security functions that support the secure operation of plants, systems, machines and networks.

In order to protect plants, systems, machines and networks against cyber threats, it is necessary to implement – and continuously maintain – a holistic, state-of-the-art industrial security concept. Siemens' products and solutions constitute one element of such a concept.

Customers are responsible for preventing unauthorized access to their plants, systems, machines and networks. Such systems, machines and components should only be connected to an enterprise network or the internet if and to the extent such a connection is necessary and only when appropriate security measures (e.g. firewalls and/or network segmentation) are in place.

For additional information on industrial security measures that may be implemented, please visit
https://www.siemens.com/industrialsecurity.

Siemens' products and solutions undergo continuous development to make them more secure. Siemens strongly recommends that product updates are applied as soon as they are available and that the latest product versions are used. Use of product versions that are no longer supported, and failure to apply the latest updates may increase customer's exposure to cyber threats.

To stay informed about product updates, subscribe to the Siemens Industrial Security RSS Feed under
https://www.siemens.com/cert.

1.7 Industrial security

Further information is provided on the Internet:

Industrial Security Configuration Manual (https://support.industry.siemens.com/cs/ww/en/view/108862708)

⚠ WARNING

Unsafe operating states resulting from software manipulation

Software manipulations, e.g. viruses, Trojans, or worms, can cause unsafe operating states in your system that may lead to death, serious injury, and property damage.

- Keep the software up to date.
- Incorporate the automation and drive components into a holistic, state-of-the-art industrial security concept for the installation or machine.
- Make sure that you include all installed products into the holistic industrial security concept.
- Protect files stored on exchangeable storage media from malicious software by with suitable protection measures, e.g. virus scanners.
- On completion of commissioning, check all security-related settings.

1.8 Residual risks of power drive systems

When assessing the machine or system-related risk in accordance with the respective local regulations (e.g. EC Machinery Directive), the machine manufacturer or system integrator must take into account the following residual risks emanating from the control and drive components of a drive system:

1. Unintentional movements of driven machine or system components during commissioning, operation, maintenance, and repairs caused by, for example,
   - Hardware faults and/or software errors in the sensors, control system, actuators, and connections
   - Response times of the control system and of the drive
   - Operation and/or environmental conditions outside the specification
   - Condensation/conductive contamination
   - Parameterization, programming, cabling, and installation errors
   - Use of wireless devices/mobile phones in the immediate vicinity of electronic components
   - External influences/damage
   - X-ray, ionizing radiation and cosmic radiation
2. Unusually high temperatures inside and outside the components, including open flames, as well as emissions of light, noise, particles, gases, etc. due to fault conditions, e.g.:
   - Component failure
   - Software errors
   - Operation and/or environmental conditions outside the specification
   - External influences/damage
   - Short circuits or ground faults in the intermediate DC circuit of the converter

3. Hazardous shock voltages caused by, for example:
   - Component failure
   - Influence during electrostatic charging
   - Induction of voltages in moving motors
   - Operation and/or environmental conditions outside the specification
   - Condensation/conductive contamination
   - External influences/damage
4. Electrical, magnetic and electromagnetic fields generated in operation that can pose a risk to people with a pacemaker, implants or metal replacement joints, etc., if they are too close
5. Release of environmental pollutants or emissions as a result of improper operation of the system and/or failure to dispose of components safely and correctly
6. Influence of network-connected and wireless communications systems, e.g. ripple-control transmitters or data communication via the network or mobile radio, WLAN or Bluetooth.
7. Motors for use in potentially explosive areas:
   When moving components such as bearings become worn, this can cause enclosure components to exhibit unexpectedly high temperatures during operation, creating a hazard in areas with a potentially explosive atmosphere.

For more information about the residual risks of the drive system components, see the relevant sections in the technical user documentation.

Ordering information

2

2.1 Device article numbers

Without option:	6RA8000 - 0MV62 - 0AA0
With options:	6RA8000 - 0MV62 - 0AA0 - Z

2.2 Rating plates, packaging label

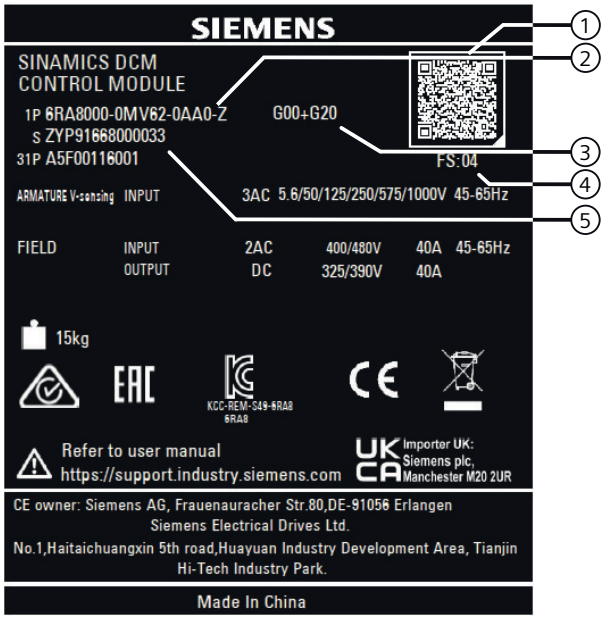

Rating plate on front cover

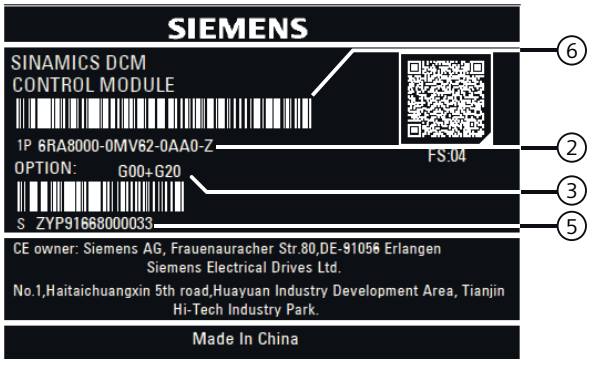

Rating plate in the device

① QR code
② For options: "Z" after the article number
③ Order codes for options (according to ordering information for options) (order-specific)
④ Product version
⑤ Serial number
⑥ Bar code article number

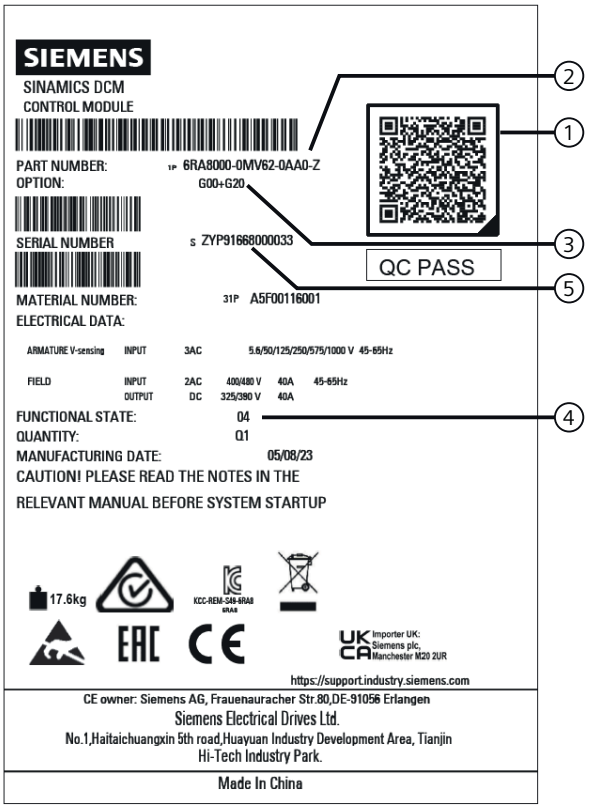

① QR code
② For options: "Z" after the article number
③ Order codes for options (according to ordering information for options) (order-specific)
④ Product version
⑤ Serial number

Figure 2-1 Packaging label

Note

You can scan the QR code on the product rating plate or on the product packaging label by using a standard code scanner or the "Industry Online Support" app to get product data, manuals, declarations of conformity, certificates and other information about your product.

2.3 Ordering information for options and accessories

Ordering information for options with order codes

6RA8000 - 0MV62 - 0AA0 - Z

□□□ + □□□ + □□□

□□□□□□□□

Article number of SINAMICS DCM Control Module with Z designation and order codes (multiple order codes together) and/or plain text, if necessary

Table 2-1 Control Unit CUD options

Option	Order codes
Advanced CUD in left slot	G00
Standard CUD in right slot (possible with option G00)	G10
Advanced CUD in right slot (possible with option G00)	G11
CBE20 PROFINET, left (possible with option G00)	G20
CBE20 PROFINET, right (possible with option G11)	G21
CompactFlash card, left	S01
Memory card, right (possible with options G10 and G11)	S02
Note: Standard equipment = Standard CUD, left	

Table 2-2 Additional options

Option	Order codes
Terminal Module Cabinet (TMC) Can be snapped onto a 35 mm mounting rail. Enables the simple connection of the CUD standard signals (X177) via spring-loaded terminals in an easily accessible area of the control cabinet. The CUD is equipped with an adapter board. Terminal Module Cabinet and connecting cable (3 m) are supplied separately. Notes: • In the device version with option G63, the X177 terminal connections are no longer available directly on the CUD. • When ordering, please specify which CUD (at the left or right slot) is to be equipped with the option. • If two CUDs are to be equipped with option G63, the option must be ordered for each CUD.	G63
Coated modules Coated modules increase the degree of ruggedness with respect to climatic effects: Relative / absolute humidity 5% to 95% / 1 to 29 g/m^3 for ambient temperature or cooling medium temperature ≤30° C ≤ 60% with the occurrence of SO_2 and H_2S and/or for ambient temperature or cooling medium temperature 30° C to 40° C Oil mist, salt mist, formation of ice, condensation, dropping, spray, splashing and jet-water not permissible.	M08
Field power unit 2Q	L11
Without field power unit	L10
Nickel-plated copper bars (in the field power unit)	M10
Control for switching over the power unit topology for devices connected in parallel and series This option is described in the application document "12-pulse applications".	S50

Ordering information for accessories

Table 2-3 Articles numbers for accessories

Article	Article number
Standard CUD retrofit kit Combination of spare parts, standard CUD and connector board	6RY1803-0AA00-0AA1 + 6RY1803-0GA00
Standard CUD coated retrofit kit Combination of the spare parts, standard CUD coated and connector board coated	6RY1803-0AA20-0AA1 + 6RY1803-0GA20
Advanced CUD retrofit kit Combination of spare parts, Advanced-CUD and connector board	6RY1803-0AA05-0AA1 + 6RY1803-0GA00
Advanced CUD coated retrofit kit Combination of spare parts, Advanced CUD coated and connector board coated	6RY1803-0AA25-0AA1 + 6RY1803-0GA20
Fuse monitoring module	6RY1803-0CM02
Fuse monitoring distributor incl. 3 m ribbon cable to connect to the SINAMICS DCM Control Module; can be snapped onto mounting rails according to DIN EN 50022-35x7.5	6RY1803-0CM26
CBE20 PROFINET	6SL3055-0AA00-2EB0
Memory card (equivalent to spare part for options S01 and S02)	6RX1800-0AS01
Terminal Module TM15	6SL3055-0AA00-3FA0
Terminal Module TM31	6SL3055-0AA00-3AA0
Terminal Module TM150	6SL3055-0AA00-3LA0
Sensor Module Cabinet-Mounted SMC10	6SL3055-0AA00-5AA3
Sensor Module Cabinet-Mounted SMC30	6SL3055-0AA00-5CA2
SICROWBAR overvoltage protection	[1]
Fuses, reactors, filters	[2]
STARTER commissioning tool	6SL3072-0AA00-0AG0
Drive Control Chart (DCC) for SINAMICS	6AU1810-1HA20-1XA0
Drive Control Chart (DCC) for SINAMICS and SIMOTION	6AU1810-1JA20-1XA0
[1] Please contact your local sales partner [2] See Chapters "Commutating reactors (Page 123)" and "Fuses (Page 127)" or contact your local Siemens office	

Table 2-4 Article numbers for the Advanced Operator Panel AOP30

Article	Article number
Advanced Operator Panel AOP30	6SL3055-0AA00-4CA5
RS485 connecting cable for connecting the AOP30 to one CUD; 3 m	6RY1807-0AP00
RS485 connecting cable for connecting the AOP30 to two CUDs; 3 m	6RY1807-0AP10
Additional cable lengths can be ordered as option. When ordering the RS485 cable with option, the suffix "-Z" must be attached to the article number followed by the order code for the required option. Ordering example for a 35 m long cable: Article number: 6RY1807-0AP00-Z, order code: K35	
Cable length	Order code
5 m	K05
10 m	K10

Article	Article number
15 m	K15
20 m	K20
25 m	K25
30 m	K30
35 m	K35
40 m	K40
45 m	K45
50 m	K50

Ordering information for cable sets

The SINAMICS DCM Control Module is supplied with front and rear plates mounted one on top of the other. The correct ribbon cables for this mounting type are already in place.

The cable sets listed below for connecting components (printed circuit boards or their parts) in the case of other mounting types (see Chapter "Connecting (Page 67)") are available on request.

Table 2-5 Ordering information for cable sets

Product description	Contents	For connecting	Article no.
Set of loose parts	Rear enclosure part including accessories for mounting the firing pulse transformer module and/or fuse monitoring module with a parallel connection		6RY1805-0CM00
Set of loose parts	Screws, stud bolts, and snap-on parts for the external mounting of module parts		6RY1807-0CM00
Prefabricated ribbon cable bridge set: for connecting the two plates when mounted at a distance from each other	2 x 26-pin ribbon cable, shielded (L = 3 m)	from X21A, X22A on PCB "Power interface for the Control Module" to X21A, X22A on PCB "Firing pulse transformer module"	6RY1807-0CM01
	1 x 10-pin ribbon cable, shielded (L = 3 m)	X23B on PCB "Power interface for the Control Module" to X23B on PCB "Fuse monitoring"	
	1 x 20-pin ribbon cable, shielded (L = 3 m)	XF1 on PCB "Power interface for the Control Module" to XF1 on PCB "Field supply power unit"	
	1 x RJ45 patch cable shielded (L = 3 m)	X45 on PCB "Power interface for the Control Module" to X45 on PCB "Voltage measurement"	

Product description	Contents	For connecting	Article no.
Prefabricated ribbon cable bridge set: for connecting the two plates when mounted at a distance from each other	2 x 26-pin ribbon cable, shielded (L = 10 m)	from X21A, X22A on PCB "Power interface for the Control Module" to X21A, X22A on PCB "Firing pulse transformer module"	6RY1807-0CM02
	1 x 10-pin ribbon cable, shielded (L = 10 m)	X23B on PCB "Power interface for the Control Module" to X23B on PCB "Fuse monitoring"	
	1 x 20-pin ribbon cable, shielded (L = 10 m)	XF1 on PCB "Power interface for the Control Module" to XF1 on PCB "Field supply power unit"	
	1 x RJ45 patch cable shielded (L = 10 m)	X45 on PCB "Power interface for the Control Module" to X45 on PCB "Voltage measurement"	
Prefabricated bridge set for current transformer	2x 2-pin twisted cables (L = 2 m)	XB on PCB "Power interface for the Control Module" to the current transformers	6RY1707-0CM03
Prefabricated bridge set for current transformer	2x 2-pin twisted cables (L = 10 m)	XB on PCB "Power interface for the Control Module" to the current transformers	6RY1707-0CM04
Prefabricated bridge set for recording heat sink temperature	1x 2-pin twisted cables (L = 10 m)	XT5 or XT6 on PCB "Power interface for the Control Module" to temperature sensor on heat sink	6RY1807-0CM05
Prefabricated bridge set for firing pulse cables	Bridge set for 12 x 2-pin twisted cables (L = 3 m)	XIMP11, XIMP12, XIMP13, XIMP14, XIMP15, XIMP16, XIMP21, XIMP22, XIMP23, XIMP24, XIMP25, XIMP26 to thyristors	6RY1707-0CM06
Prefabricated bridge set for fuse monitoring	6 x 2-pin twisted cables (L = 10 m)	XS1_5, XS2_5, XS3_5, XS4_5, XS5_5, XS6_5, XS7_5, XS8_5, XS9_5, XS10_5, XS11_5, XS12_5 or XS1_4, XS2_4, XS3_4, XS4_4, XS5_4, XS6_4, XS7_4, XS8_4, XS9_4, XS10_4, XS11_4, XS12_4 or XS1_3, XS2_3, XS3_3, XS4__3, XS5_3, XS6_3, XS7_3, XS8_3, XS9_3, XS10_3, XS11_3, XS12_3 or XS1_2, XS2_2, XS3_2, XS4_2, XS5_2, XS6_2, XS7_2, XS8_2, XS9_2, XS10_2, XS11_2, XS12_2 or XS1_1, XS2_1, XS3_1, XS4_1, XS5_1, XS6_1, XS7_1, XS8_1, XS9_1, XS10_1, XS11_1, XS12_1 depending on the voltage (50 V, 125 V, 250 V, 575 V, or 1,000 V) to fuses	6RY1807-0CM07

Product description	Contents	For connecting	Article no.
Prefabricated bridge set for voltage measurement	1x 3-pin twisted cables U-V-W (L = 3 m)	XU6, XV6, XW6 or XU5, XV5, XW5 or XU4, XV4, XW4 or XU3, XV3, XW3 or XU2, XV2, XW2 or XU1, XV1, XW1 depending on the voltage (5.6 V, 50 V, 125 V, 250 V, 575 V, or 1,000 V) to the supply	6RY1807-0CM08
	1x 2-pin twisted cables C-D (L = 3 m)	XC6, XD6 or XC5, XD5 or XC4, XD4 or XC3, XD3 or XC2, XD2 or XC1, XD1 depending on the voltage (5.6 V, 50 V, 125 V, 250 V, 575 V, or 1,000 V) to the supply	
Prefabricated bridge set for controlling firing pulse transformers	12 x 2-pin twisted cables (L = 1 m)	from XIMP1, XIMP4 or XIMP2, XIMP5 or XIMP3, XIMP6 on PCB "Firing pulse transformer module" (side sections) to firing pulse transformer modules (single boards) with terminals X11, X12, X13, X14, X15, X16, X21, X22, X23, X24, X25, X26	6RY1707-0CM13
Prefabricated bridge set for controlling firing pulse transformers	2x 12-pin twisted cables (L = 10 m)	from XIMP1, XIMP4 and/or XIMP2, XIMP5 and/or XIMP3, XIMP6 on PCB "Firing pulse transformer module" to external firing pulse transformers	6RY1707-0CM10
Prefabricated bridge set for mounting plates next to each other	2 x 26-pin ribbon cable, shielded (L = 0.68 m)	from X21A, X22A on PCB "Power interface for the Control Module" to X21A, X22A on PCB "Firing pulse transformer module"	6RY1807-0CM11
	1 x 10-pin ribbon cable, shielded (L = 0.5 m)	X23B on PCB "Power interface for the Control Module" to X23B on PCB "Fuse monitoring"	
	1 x 20-pin ribbon cable, shielded (L = 0.76 m)	XF1 on PCB "Power interface for the Control Module" to XF1 on PCB "Field supply power unit"	
	1 x RJ45 patch cable shielded (L = 1 m)	X45 on PCB "Power interface for the Control Module" to X45 on PCB "Voltage measurement"	

Description

3

Area of application

The SINAMICS DCM Control Module is mainly used for modifying and modernizing DC drives in existing systems.

Many DC systems still use analog technology. When such systems are modified or upgraded, the motor, mechanical parts and power unit are retained, with just the closed-loop control section being replaced by a SINAMICS DCM Control Module. This is a highly cost-effective solution for those interested in a modern DC drive with the entire range of functions associated with the fully digital units in the SINAMICS DCM range.

A simple process of parameter assignment is all that is required in terms of adapting the product to the configuration of the existing components.

The SINAMICS DCM Control Module contains a power unit for field supply with a rated current of up to 40 A.

Structure

A striking feature of the SINAMICS DCM Control Module is its compact, space-saving structure. Its compact design makes it easier to service, as the individual components are readily accessible.

To make the most of the installation options existing systems have to offer, the SINAMICS DCM Control Module can be divided into smaller parts (from the top down).

The printed circuit board for generating and distributing firing pulses can also be split and, just the same as the fuse monitoring and voltage measurement equipment, attached to the power unit directly, either partly or completely outside the device, with a cable providing the connection to the basic unit.

All connecting terminals can be accessed from the front.

The SINAMICS DCM Control Module has a Basic Operator Panel BOP20 in the front plate.

The BOP20 offers the following options:

- commissioning the drive
- display for all relevant measured values
- display of faults and alarms and acknowledgment of faults
- switching the drive on and off

The electronics (CUD) are available in the following versions:

- Standard CUD
- Advanced CUD (option)
  This CUD can be expanded to include a PROFINET module (CBE20) and features 2 DRIVE-CLiQ connections for connecting additional components from the SINAMICS drive system, as well as a connector for expansion purposes (to include a second CUD).
- Additional, second CUD (Standard or Advanced) (option)
  This additional CUD can be inserted to the right of the first CUD and is used for system-specific extension of SINAMICS DCM functions.

Additional components

- **Advanced Operator Panel AOP30**
  The optional Advanced Operator Panel AOP30 is installed outside of the unit - in the control cabinet door, for example - rather than inside it.
  The AOP30 ensures the following additional comfort:
  - Commissioning is supported by a wizard.
  - Measured values are represented by a graphical operation screen.
  - Displays a user-friendly parameter list, including text.
  - There are several editors for user-friendly setting and changing of parameters.
  - As well as help texts on individual faults and alarms, the fault and alarm messages which have occurred are listed.
  - Control of the drive (ON/OFF, setpoint input, jog, direction of rotation reversal) is enabled "on site".
  - Three LEDs display the drive status.
- **Additional module CBE20**
  The additional module CBE20 is inserted in the optional module slot of an Advanced CUD. It enables the SINAMICS DCM to connect to the **PROFINET** network as a slave as well as to establish **SINAMICS Link** connections.
- **DRIVE-CLiQ components**
  The DRIVE-CLiQ interface enables components from the SINAMICS drive system to be connected.
  The following components are supported:
  - TM15 (digital inputs/outputs)
  - TM31 (digital inputs/outputs, analog inputs/outputs)
  - TM150 (temperature sensor inputs)
  - SMC10 (resolver evaluation for speed actual value sensing)
  - SMC30 (pulse encoder evaluation for actual speed value acquisition)

An SMC10 or SMC30 and up to three TMx modules can be connected to each CUD.

Extended functions

- **Free function blocks (FBLOCKS)**
  In a wide variety of applications, a logic operation connecting several states (e.g. access control, system status) to a control signal (e.g. ON command) is required to control the drive system. However, in addition to logic operations, drive systems require mathematical operations and memory elements.
  These functions are available in the form of the "free function blocks" function module.
  A series of elementary function blocks are available that can be freely used:
  - Logic function blocks (AND, OR, XOR, inverter)
  - Arithmetic function blocks (adder, multiplier, divider, absolute-value generator)
  - Time function blocks (pulse generator, pulse contracting block, ON delay, OFF delay, pulse stretching)
  - Memory function blocks (RS flip-flop, D flip-flop)
  - Switch function blocks (binary selector switch, numerical selector switch)
  - Control function blocks (limiter, smoothing element, integrator, derivative element)
  - Complex function blocks (double-sided limit monitor with hysteresis)
- **Drive Control Chart (DCC)**
  DCC is available for applications requiring a more complex method of controlling the drive system which cannot be accomplished using the free function blocks. DCC makes it possible to generate a graphic depiction of a function diagram consisting of interconnected elementary function blocks and load it to the SINAMICS DCM. The function diagram may contain up to 750 function blocks. The time slices, in which the individual parts of the function block diagram are processed, can be configured.

  Note

  A DCC function diagram can be loaded not only onto the CUD in the left-hand slot, but also to an optional second CUD in the right-hand slot.
  The closed-loop drive control is computed on the CUD in the left-hand slot. This means that only a restricted amount of computing capacity is available for a DCC function block diagram. In other words, either only a few function blocks can be computed, or computing can only be carried out in a slow time slice.
  The CUD in the right-hand slot is essentially available (in addition to the operating system) for one DCC function diagram only.

- **Technology controller**
  Simple closed-loop control functions can be implemented with the technology controller, e.g.:
  - Level control
  - Temperature control
  - Dancer roll position control
  - Pressure control
  - Flow control
  - Simple control without higher-level control
  - Tension control

Technical data

4

Note

You can find the technical data for the connectors and terminals in the section titled "Connecting (Page 67)".

4.1 Environmental conditions

Environmental classes according to IEC 60721-3

Table 4-1 Environmental classes

Use	Environmental condition	Environmental class	Remark
Operation according to IEC 60721-3-1:2002	Mechanical stability	see remark	• Vibratory load (test and measuring procedure according to IEC 60068-2-6, Fc): – Constant deflection = 0.075 mm at 10 ... 58 Hz – Constant acceleration = 10 m/s² at 58 ... 200 Hz • Shock load (test and measuring procedure according to IEC 60068-2-27, Ea): Acceleration = 150 m/s² at 11 ms
	Climatic influences	3K3	No condensation, splash water, or icing allowed. For air temperature, see "Ambient temperature" below
	Biological influences	3B1	-
	Hazardous chemical substances	3C1	-
	Mechanically hazardous materials	3S2	-
Shipping according to IEC 60721-3-1:1997	Mechanical stability	2M2	Tipping is not permitted.
	Climatic influences	2K2	Air temperature of -40 °C to +70 °C is permitted [1)]
	Biological influences	2B1	-
	Hazardous chemical substances	2C1	-
	Mechanically hazardous materials	2S1	-

Use	Environmental condition	Environmental class	Remark
Storage according to IEC 60721-3-1:1997	Mechanical stability	1M2	Tipping is not permitted.
	Climatic influences	1K3	Air temperature of -40 °C to +70 °C is permitted [1]
	Biological influences	1B1	-
	Hazardous chemical substances	1C1	-
	Mechanically hazardous materials	1S1	-

[1] Only applies when product is in its original packing

Ambient temperature

Use	Tu [°C]	Remark
Storage according to IEC 60721-3-1:1997	-40 ... +70	Only applies when product is in its original packing
Shipping according to IEC 60721-3-1:1997	-40 ... +70	Only applies when product is in its original packing
Operation	0 ... +55	To ensure adequate cooling of the electronics components, the supply air temperature must be reduced by 3.5 K / 500 m from 1000 m above sea level.

4.2 Unit data

Table 4-2 Technical data of the SINAMICS DCM Control Module

Armature rated supply voltage	V	5.6 / 50 / 125 / 250 / 575 / 1000
Electronics power supply, rated supply voltage	V	18 to 30 DC; In = 5 A
Rated field supply voltage [1]	V	2 AC 400 V (+15 % / -20 %) 2 AC 480 V (+10 % / -20 %)
Rated frequency	Hz	The units automatically adjust to the frequency of the applied line voltage in a range from 45 to 65 Hz [3].
Rated field DC voltage [1]	V	325 / 390
Rated field DC current	A	40
Closed-loop control constancy		Δn = 0.006% of the rated motor speed during operation with pulse encoder and digital setpoint Δn = 0.1% of rated motor speed during operation with analog tachometer or analog setpoint [2]
Degree of protection		IP00 acc. to IEC 60529
Protection class		Class I (with protective conductor system) and Class III (PELV) acc. to IEC 61800-5-1

Dimensions		see dimension drawings Chapter "Transport, unpacking, installation (Page 47)"
Weight	kg	12

1) The field supply voltage may be below the rated field voltage (setting for p50078.1, input voltages of up to 85 V are permitted). The output voltage decreases accordingly.
This output voltage can no longer be achieved at voltages below 95% of the rated supply voltage.

2) Conditions:
The closed-loop control (PI control) stability is referred to the rated motor speed and applies when the SINAMICS DCM is in the warm operating condition. This is subject to the following preconditions:
- Temperature changes of ± 10 °C
- Line voltage changes of +10 % / -5 % of the rated input voltage
- Temperature coefficient of the tachometer generator with temperature compensation: 0.15 ‰ per 10 °C (for analog tachometers only)
- Constant setpoint (14-bit resolution)

3) Operation with an extended frequency range is possible on request.

Transport, unpacking, installation 5

5.1 Transport, unpacking

SINAMICS DCM is packaged in the manufacturer's plant in accordance with what is specified in the order. A product packaging label is located on the carton.

Avoid heavy vibration and severe shocks during transportation, e.g. when lowering into position.

Follow the instructions on the packaging concerning transportation, storage and proper handling.

SINAMICS DCM can be installed once it has been unpacked and checked that the delivery is complete and the device is intact.

The packaging can be disposed of in accordance with local regulations.

If you discover any damage that has occurred in transit, please inform your shipping agent immediately.

5.2 Installation

⚠ WARNING

Failure to observe general safety instructions and residual risks

If the general safety instructions and remaining risks are not observed, accidents can occur involving severe injuries or death.

- Observe the general safety instructions.
- When assessing the risk, take into account remaining risks.

Note

Restriction regarding disassembly in conjunction with functional safety

If the SINAMICS DCM Control Module is integrated in a functional safety application, it is **not** permissible that the firing pulse transformer module or its control is modified in any way, see Chapter "Functional safety (Page 671)".

5.2.1 Dimension drawings

Device

All dimensions are specified in millimeters.

Tolerance for external dimensions is +2 mm

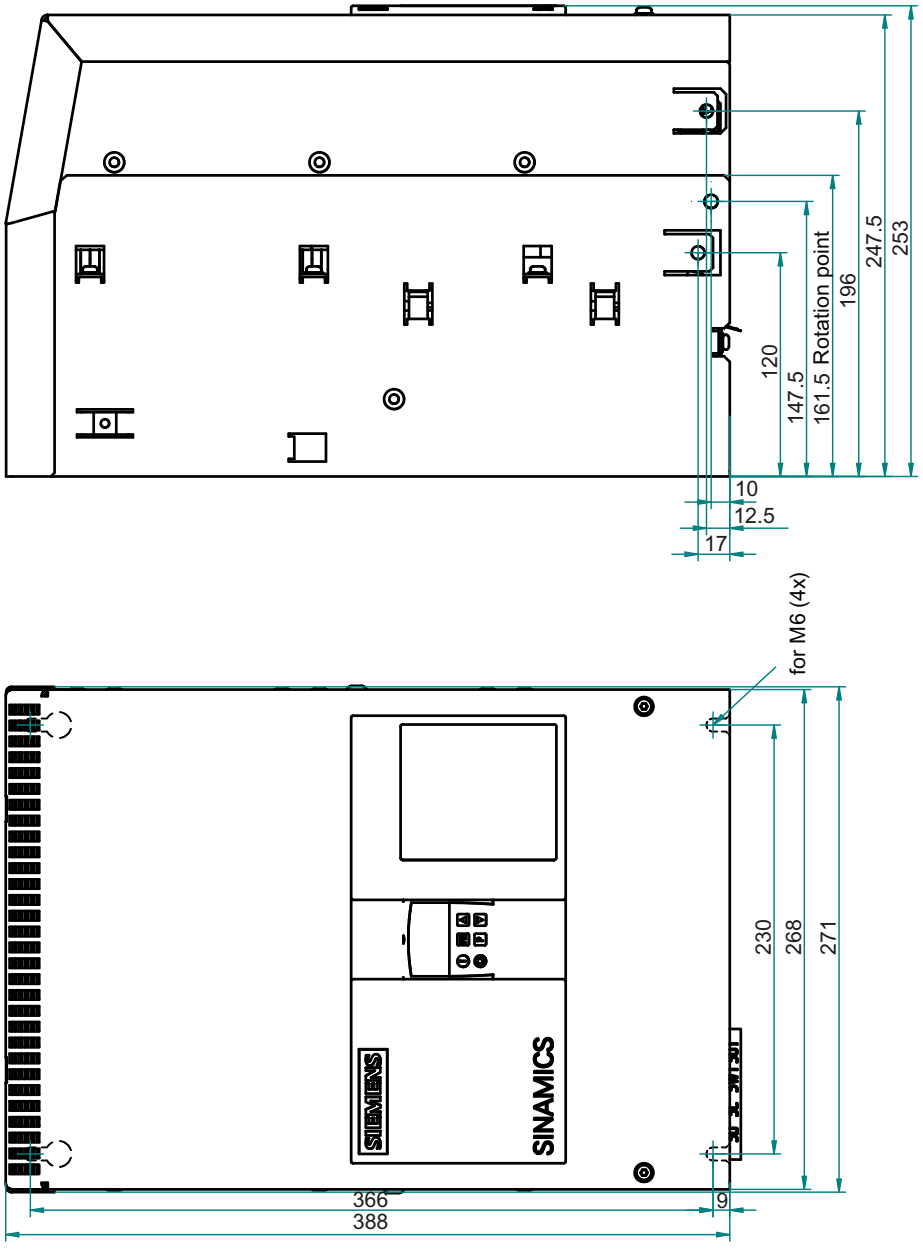

Figure 5-1 Device components after assembly (on delivery)

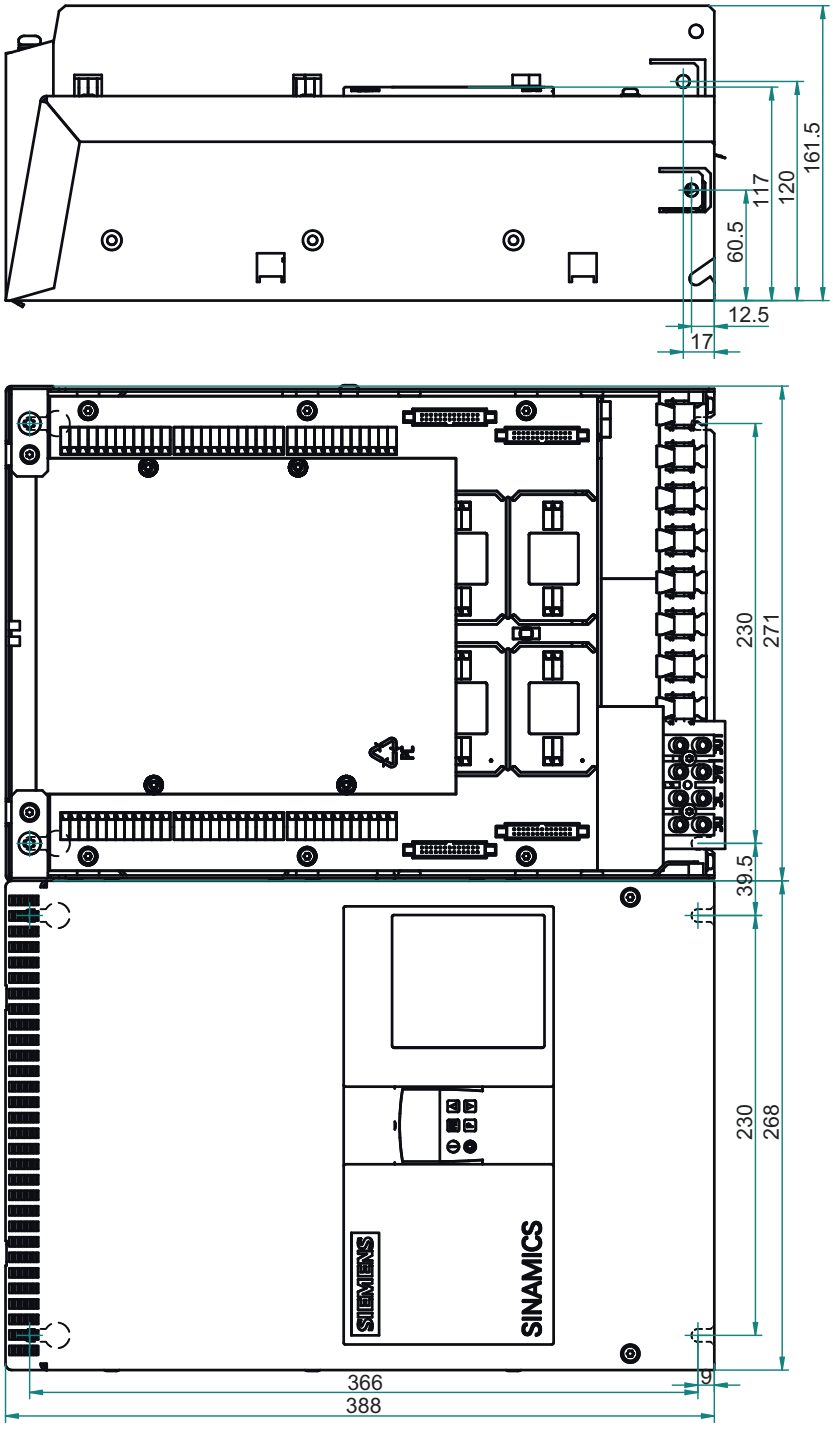

Figure 5-2 Device components arranged alongside each other

Firing pulse transformer module

Dimensions of the complete module W × H = 260 × 298 mm

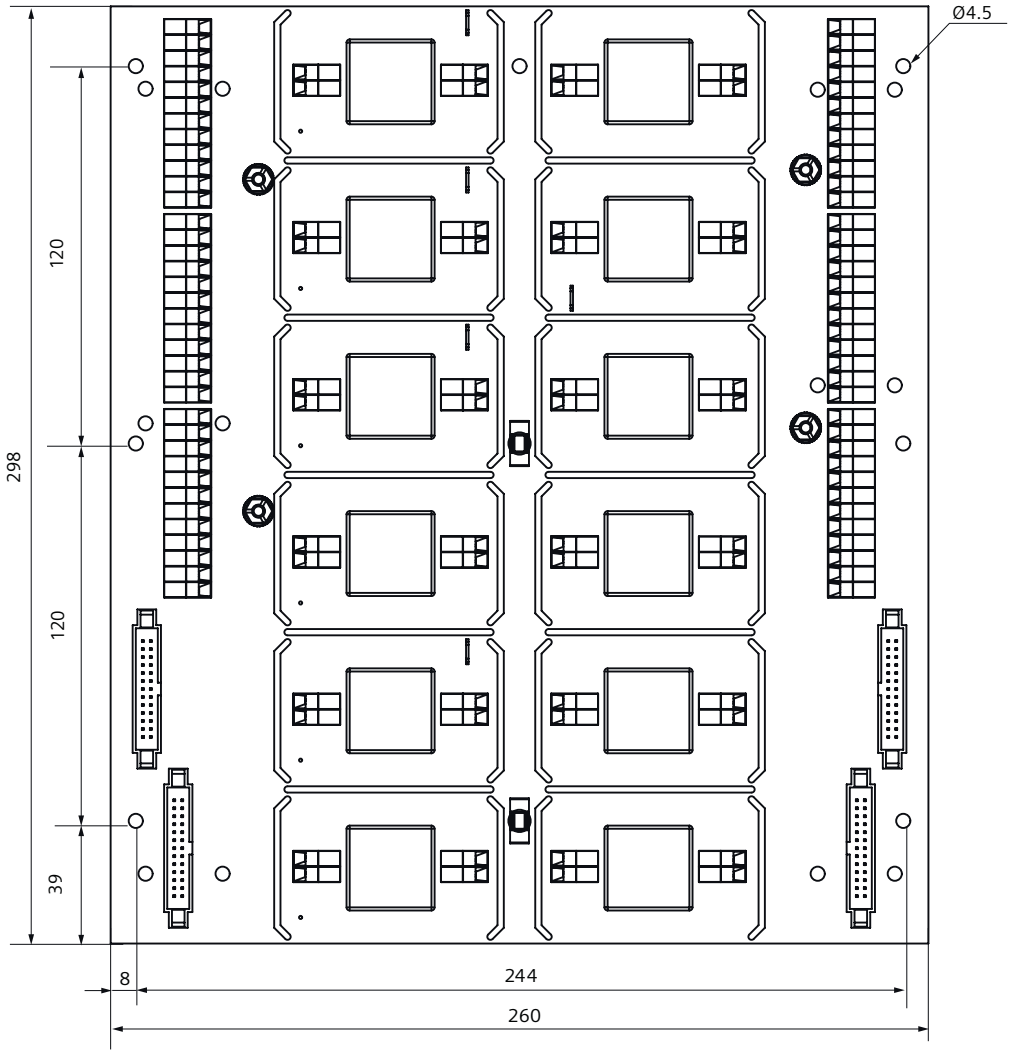

Figure 5-3 Dimension drawing, firing pulse transformers module

Control PCB:

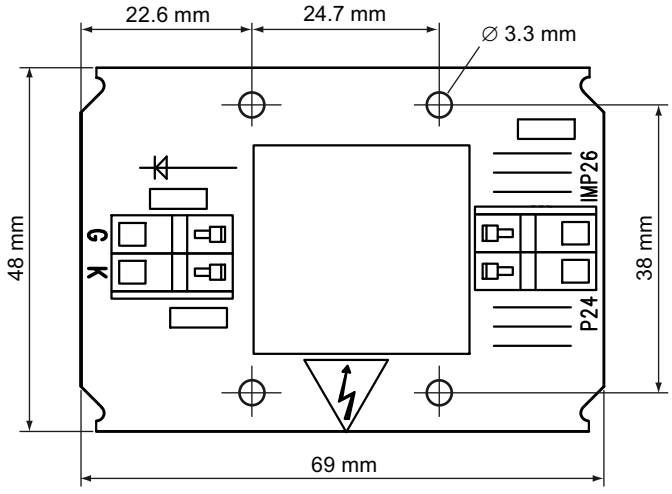

Figure 5-4 Dimension drawing, control PCB

Side sections:

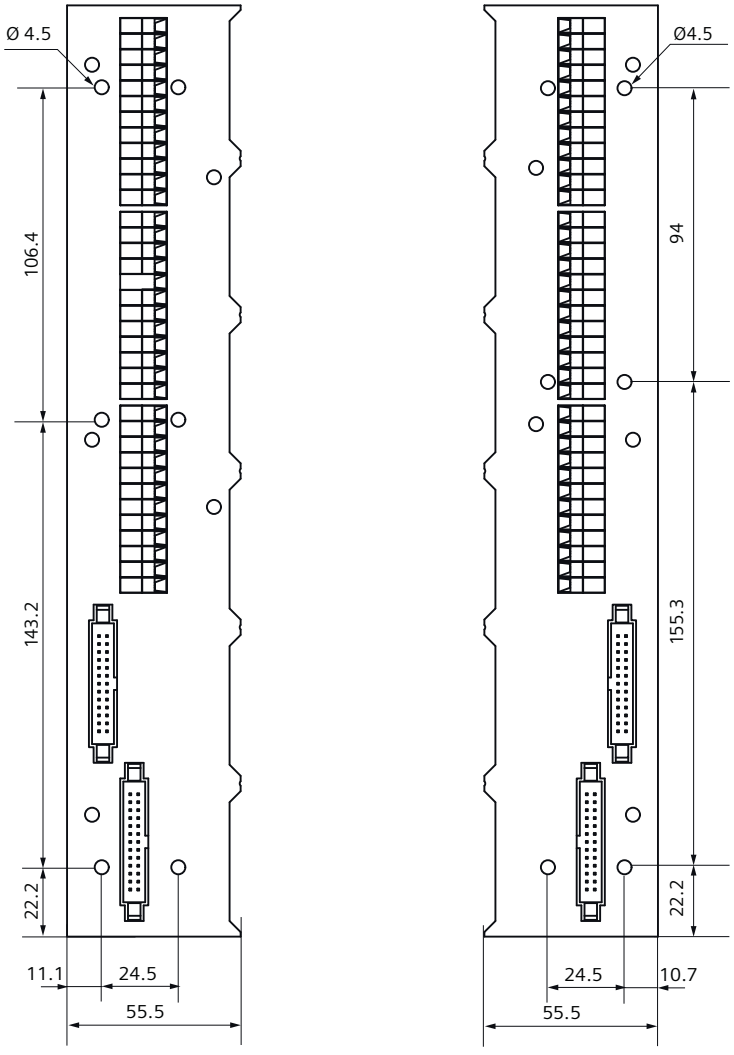

Figure 5-5 Dimension drawing, side sections

Voltage measurement equipment

All dimensions are specified in millimeters.

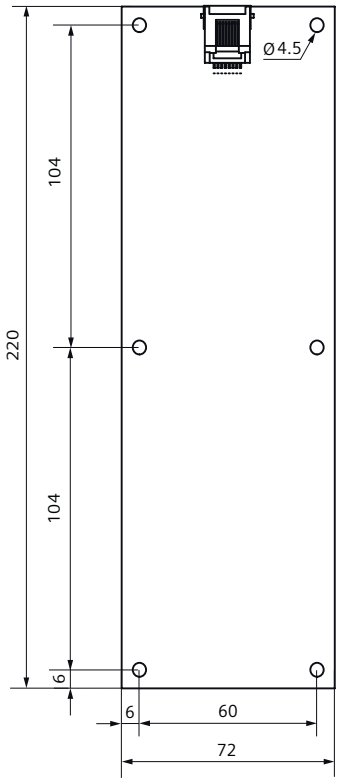

Figure 5-6 Dimension drawing, voltage measurement equipment

Fuse monitoring equipment

All dimensions are specified in millimeters.

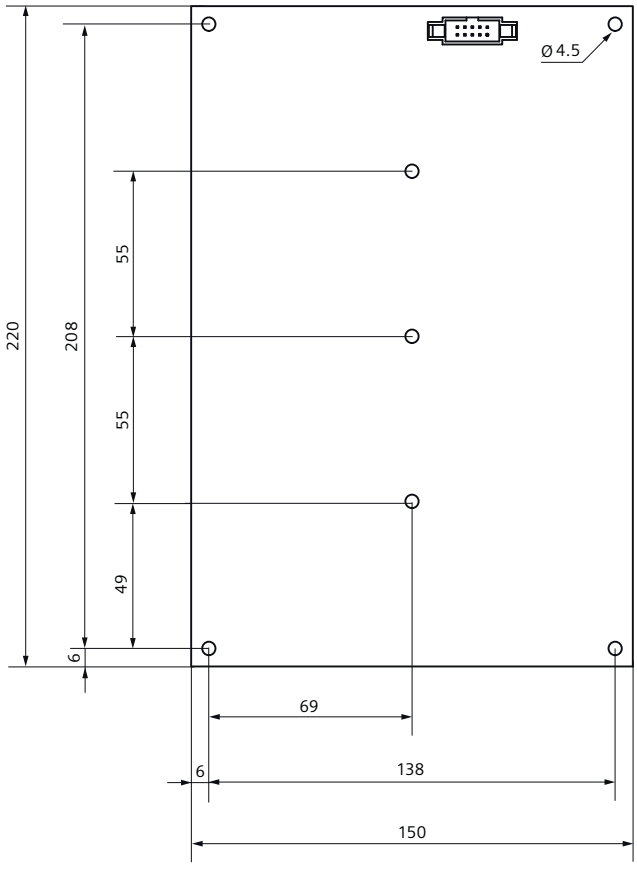

Figure 5-7 Dimension drawing, fuse monitoring equipment

5.2.2 Dividing the unit

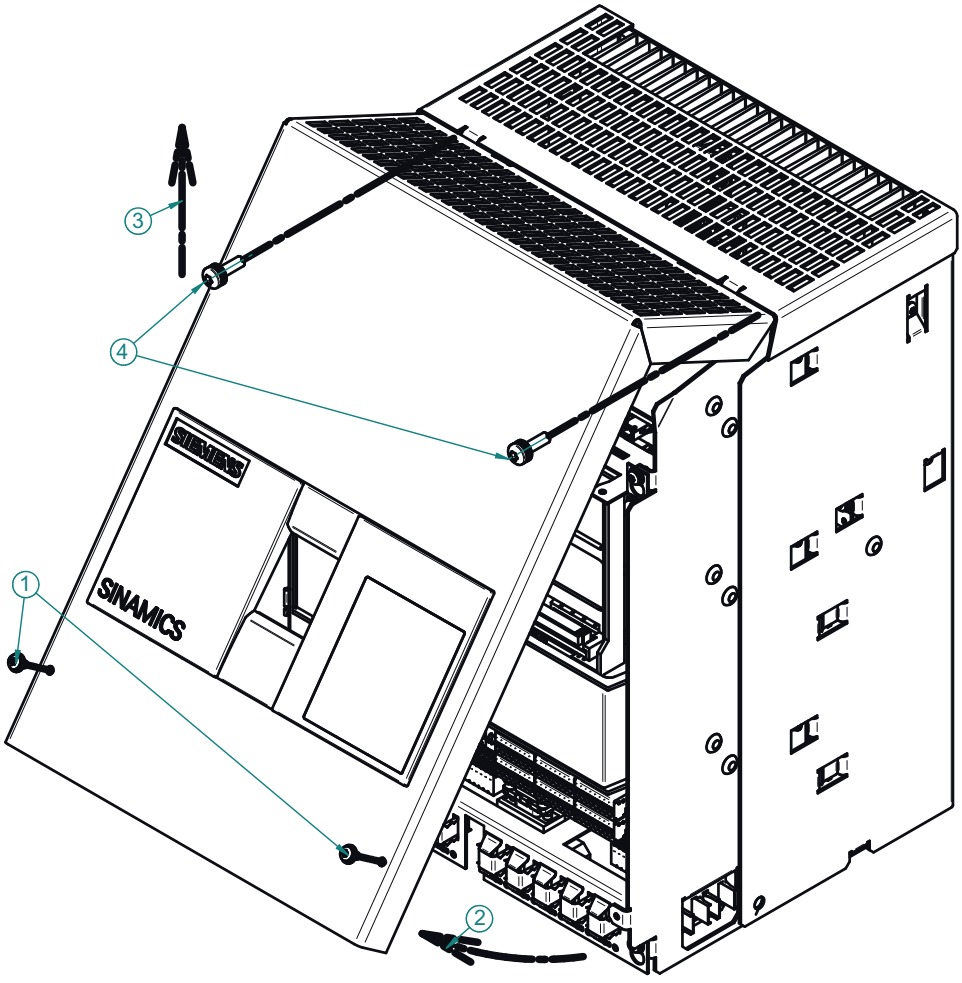

1. Loosen the screws ①.
2. Pull the front cover towards you ② and then upwards to remove it ③.
3. Unplug the cable connections between the two plates.
4. Loosen the screws ④.

Figure 5-8 Dividing the unit (1)

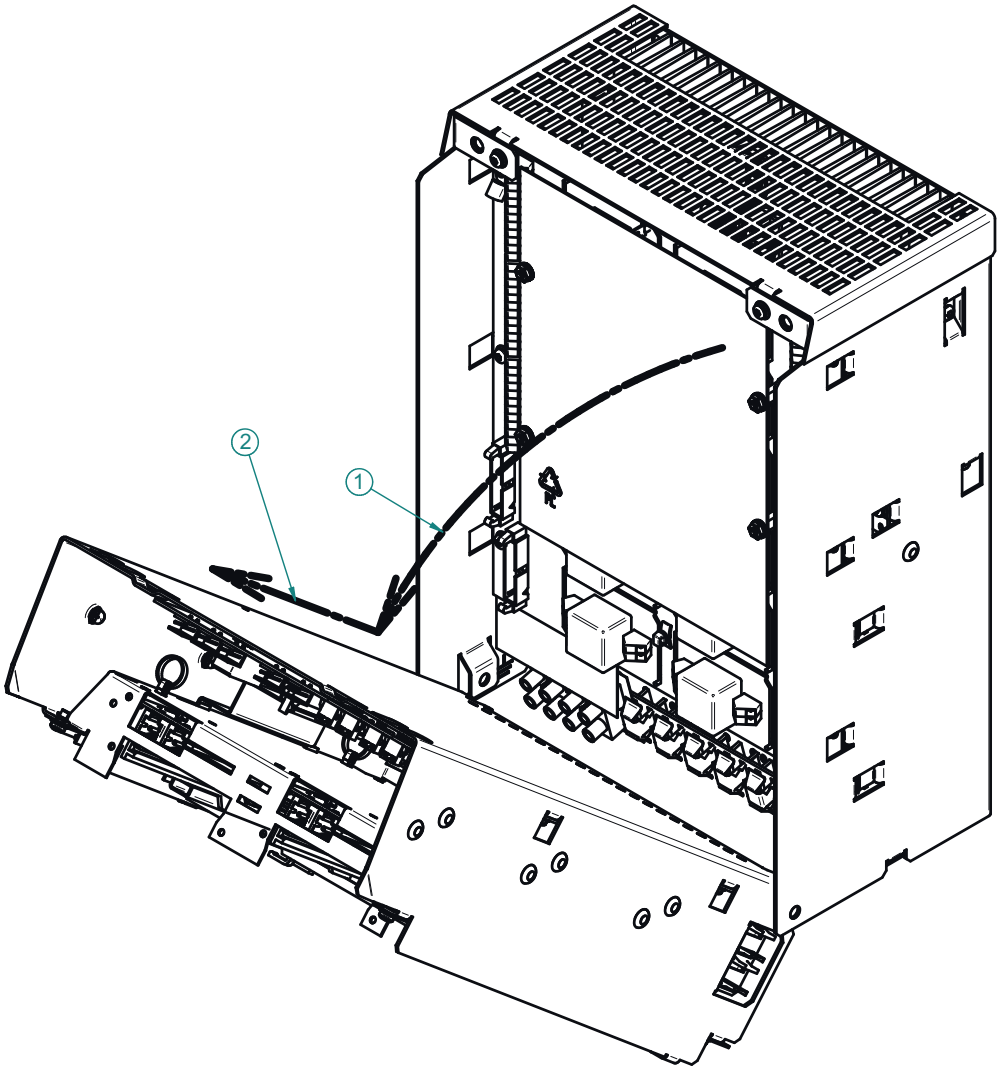

5. Pull the plate towards you ① and remove it ②.

Figure 5-9 Dividing the unit (2)

5.2.3 Removal/Installation and division of modules

5.2.3.1 Removing modules

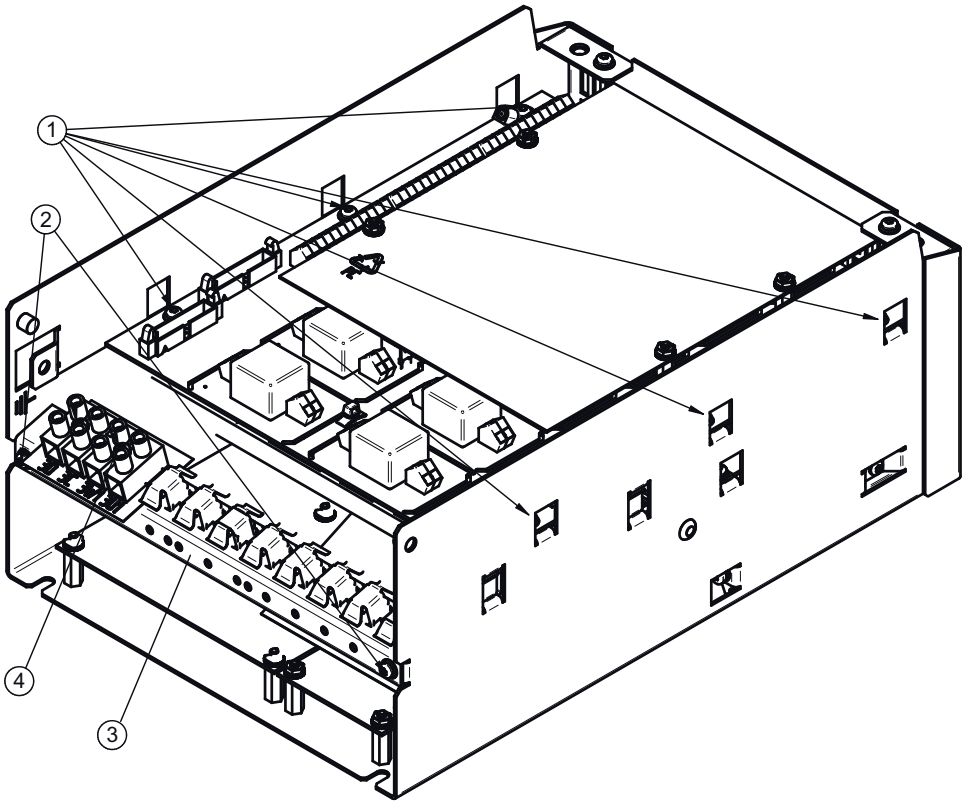

To remove the firing pulse transformer module, pull the cables out from the module and loosen the screws ①

To remove other modules, remove the shield ③ by pulling it towards you. You will need to unscrew the field terminal ④ and then loosen the screws ② before doing this.

Figure 5-10 Removing modules (1)

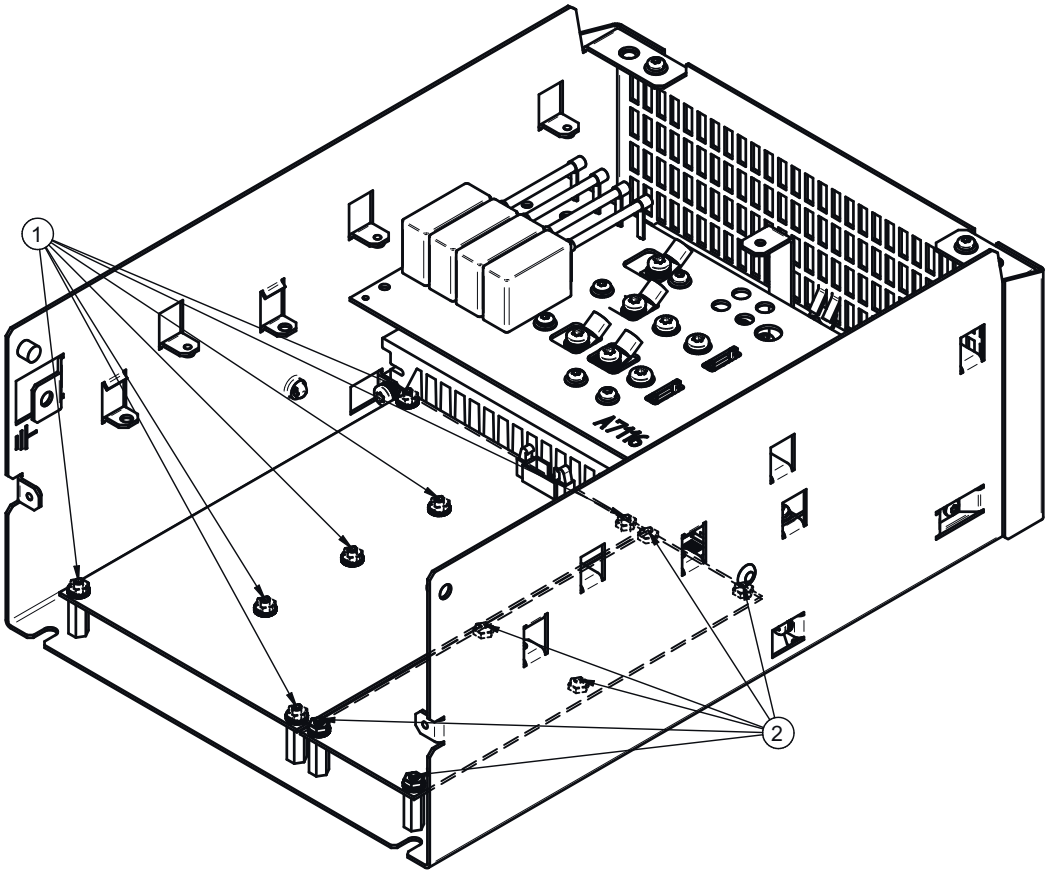

To remove the fuse monitoring equipment, pull the cables out from the module and loosen the screws ①.

To remove the voltage measurement equipment, pull the cables out from the module and loosen the screws ②.

Figure 5-11 Removing modules (2)

5.2.3.2 Firing pulse transformer module

Dividing the module

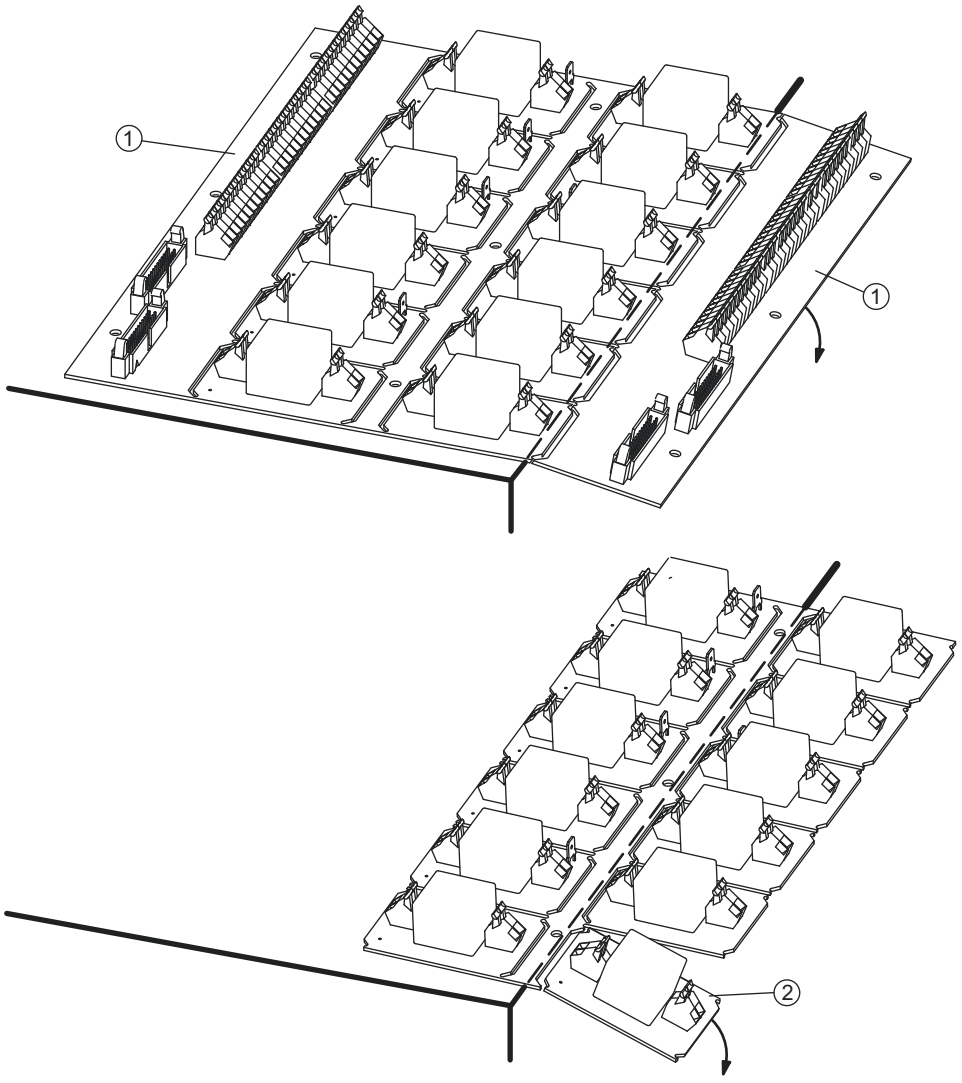

1. Use the edge of a table to separate the two terminal parts ①.
2. Use the edge of a table to separate the small control boards ②.

Figure 5-12 Dividing the firing pulse transformer module

Installing terminal strips

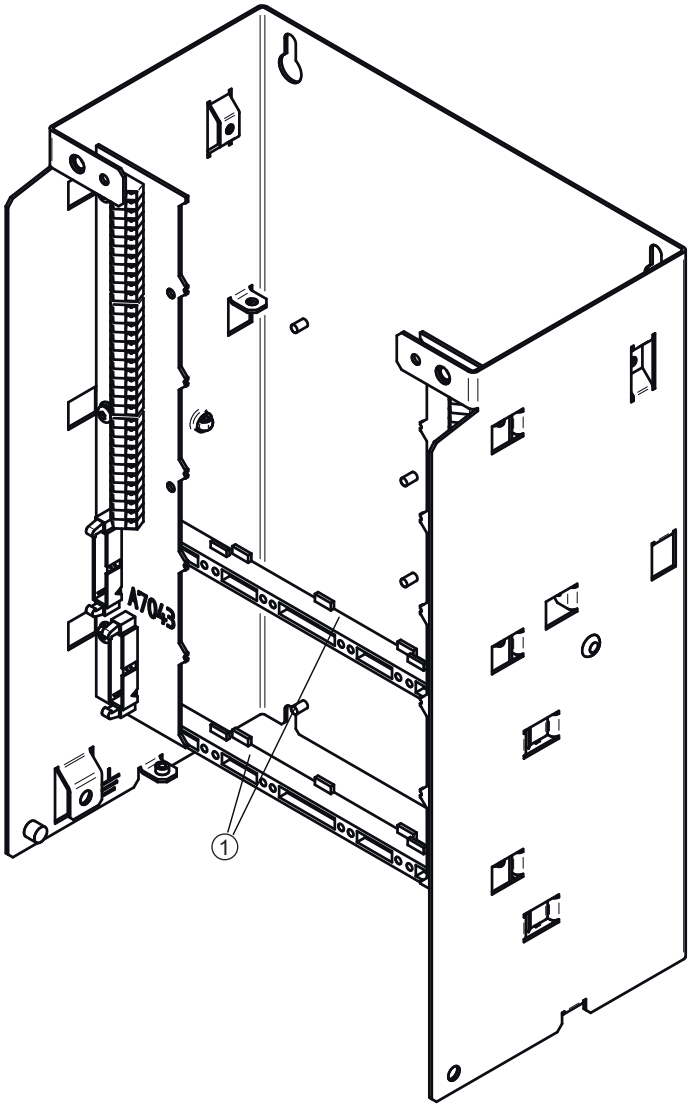

Leave the two crossbraces ① for supporting the side sections of the modules in the device.

Figure 5-13 Firing pulse transformer module

External mounting of module parts

The parts required are not included in the scope of delivery, but are available as a "set of loose parts" under article no. 6RY1807-0CM00.

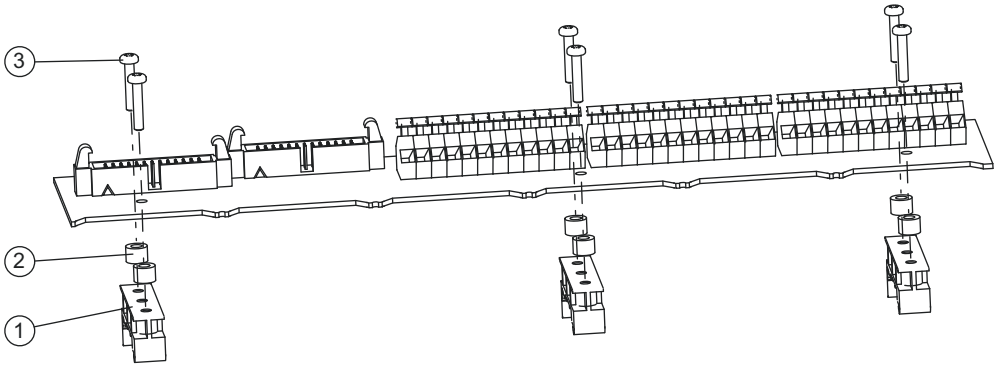

The three snap-on parts ① for the DIN rail, which satisfies DIN EN 50022-35x7.5, are mounted on the terminal strip with spacer rollers ② and M3x16 screws ③.

Figure 5-14 External mounting of the terminal strip

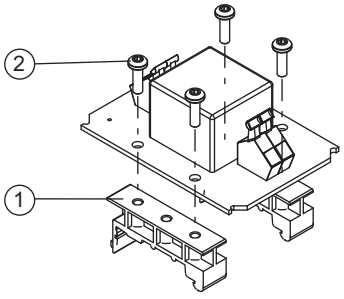

The two snap-on parts ① for the DIN rail, which satisfies DIN EN 50022-35x7.5, are mounted on the small control boards with M3x8 screws ②.

Figure 5-15 External mounting of the small firing pulse transformer boards

5.2.3.3 Fuse monitoring and voltage measurement

External mounting of fuse monitoring equipment

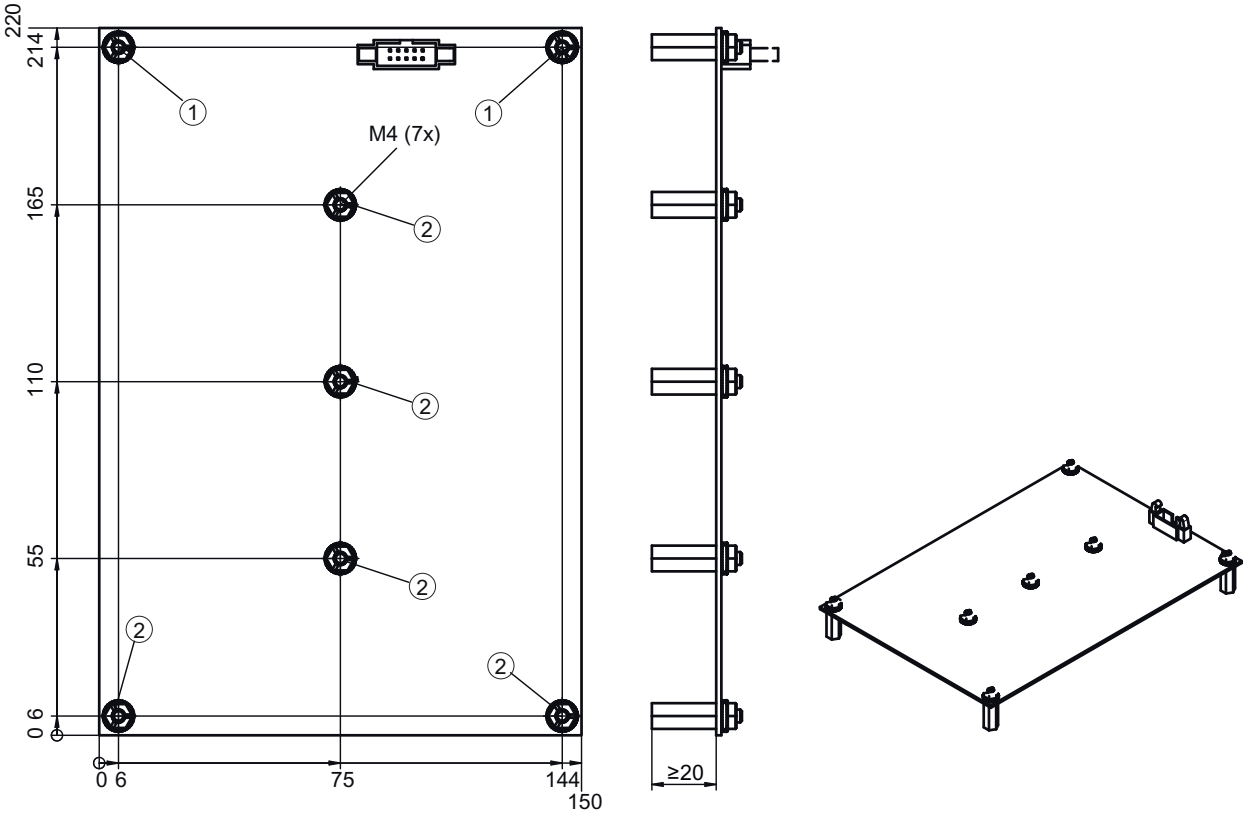

Mount the module on the spacing bolts.

① Ferrous fixing elements (x2)

② Insulating fixing elements (x5)

Figure 5-16 External mounting of the fuse monitoring equipment

External mounting of voltage measurement equipment

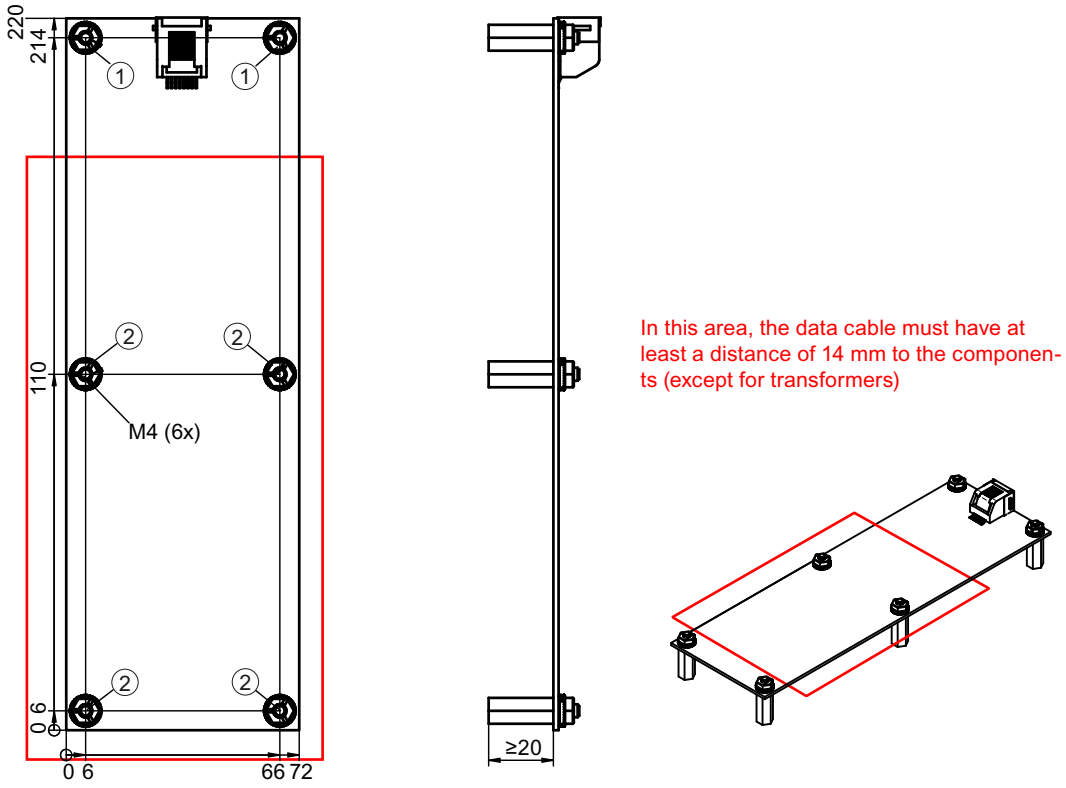

Mount the module on the spacing bolts.

① Ferrous fixing elements (x2)

② Insulating fixing elements (x4)

Figure 5-17 External mounting of the voltage measurement equipment

5.2.4 Installing options and accessories

5.2.4.1 AOP30 operator panel

Installation cut-out required in the cabinet door: 197.5 × 141.5 mm

5.2.4.2 Fuse monitoring distributor

The module can be snapped onto a mounting rail according to DIN EN 50022-35x7.5.

5.2.4.3 Installing a second CUD

NOTICE
Electrostatic-sensitive devices (ESD)
Note the information provided on "Electrostatic sensitive devices (ESD)" in Chapter 1.

Note

Use the supplied mounting aid. See Chapter "Replacing the CUD (Page 662)".

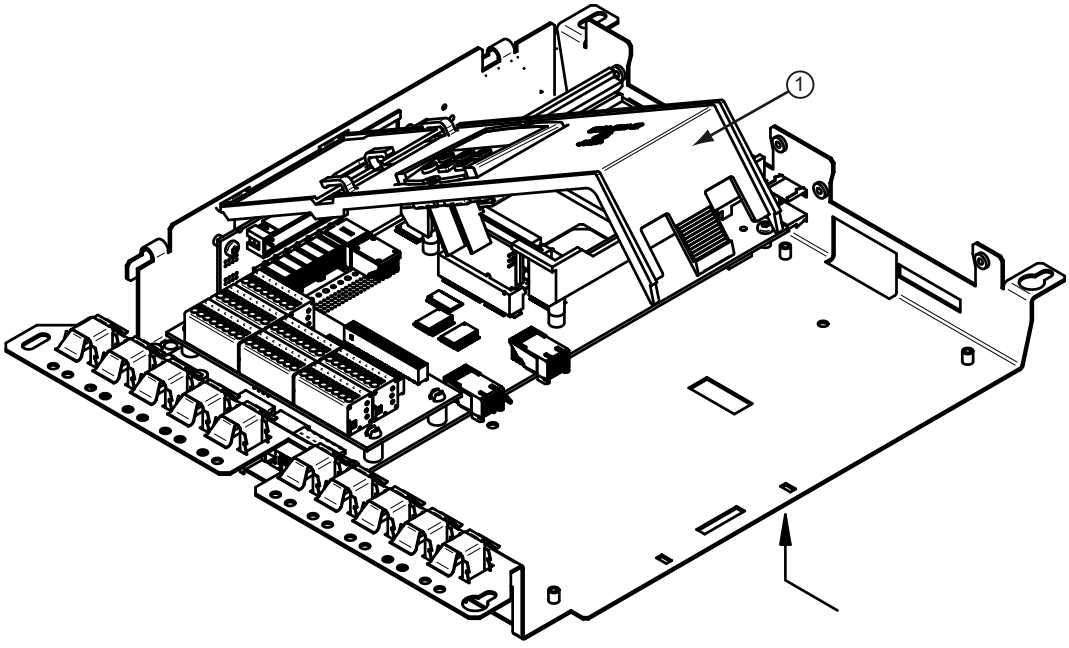

1. Unlock and tilt up the BOP support ①.

Figure 5-18 Installing a second CUD (1)

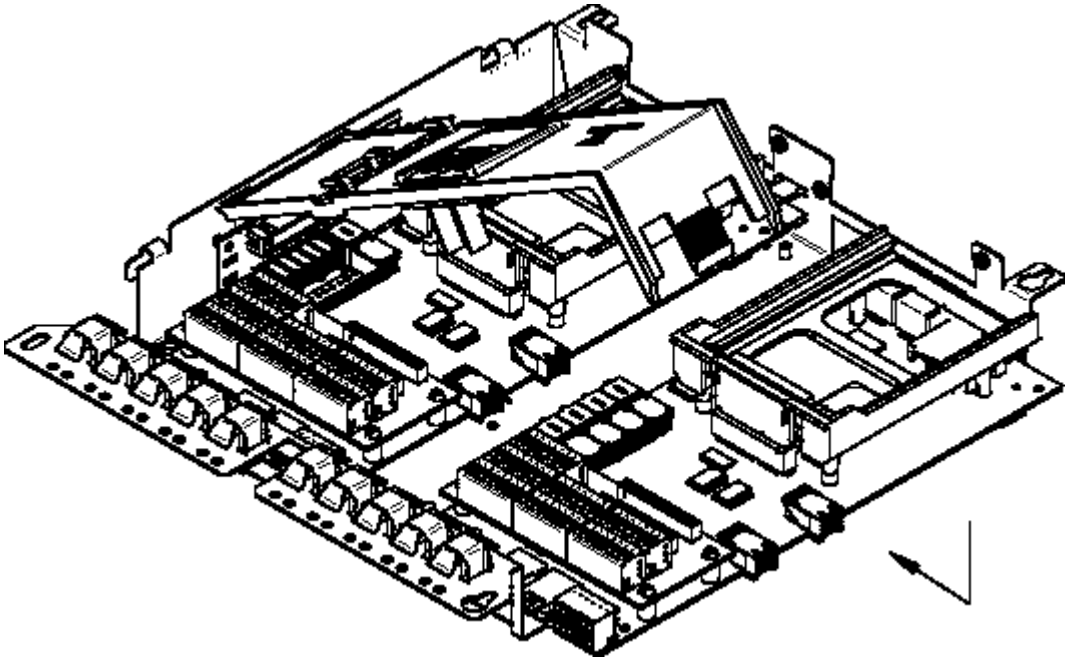

2. Mount the CUD and push it into the connectors for the left-hand CUD.
3. Secure the CUD using four screws (screw and washer assembly, M3×6), tightening torque 1 Nm

Figure 5-19 Installing a second CUD (2)

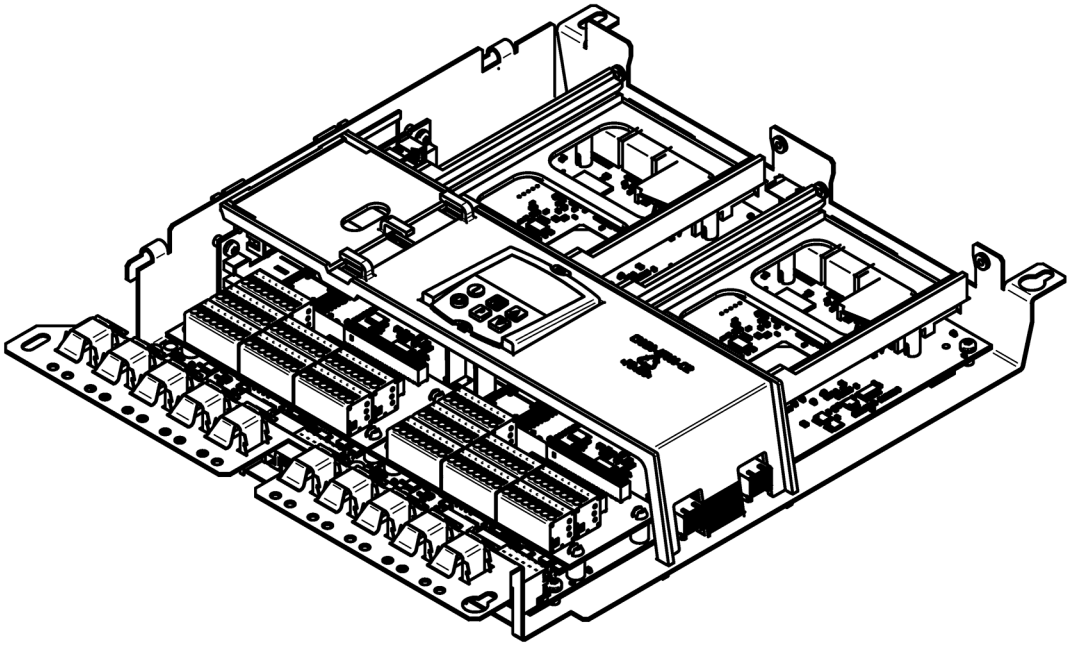

4. Lock the BOP support again.
   CAUTION: Do not clamp the BOP cable

Figure 5-20 Installing a second CUD (3)

Connecting

6

⚠ WARNING

Failure to observe general safety instructions and residual risks

If the general safety instructions and remaining risks are not observed, accidents can occur involving severe injuries or death.

- Observe the general safety instructions.
- When assessing the risk, take into account remaining risks.



⚠ WARNING

Electric shock due to the residual charge of the capacitors

Because of the capacitors of the external power unit, a hazardous voltage is still present for a period of time after the power supply has been switched off.

If live components are touched then this can result in severe injury or death.

- Open the unit only after the time specified on the warning label has elapsed.
- Before starting work, check the absence of voltage by measuring all poles, also to ground.

The devices may be connected to a line supply with residual current operated circuit breaker if a universal current sensitive device is being used, which in the case of a ground fault, can also detect a DC component in the fault current. It is recommended to use a residual current operated circuit breaker with an operating current ≥ 300 mA, which means that it is not suitable to protect personnel. If you have additional questions, please contact Technical Support.

The power and control terminals may be live even when the motor is not running.

When handling the device while it is open, remember that live parts are exposed. The device must only be operated with the front covers provided by the factory fitted. When required, additional covers should be provided in the control cabinet (for example, in the area around the busbars).

To operate the SINAMICS DCM, both front cover fixing screws must be tight.



⚠ WARNING

Electric shock when connecting a PROFIBUS cable under voltage

When connecting the PROFIBUS cable while voltage is present, there is a danger of coming into contact with live components behind the terminal.

Touching live components can result in death or serious injury.

- Only connect the PROFIBUS cable to connector X126 when the device is in a no-voltage condition.

NOTICE
Surge arresters
Surge arresters must be in compliance with IEC 60364-5-53:2002.

6.1 Instructions for EMC-compliant drive installation

Note

These installation instructions do not claim to contain all details and versions of devices, or to take into account all conceivable operational cases and applications.

Should you require further information or encounter specific problems which have not been dealt with in enough detail for your field of application, please contact your sales representative.

6.1.1 Basic information about EMC

What is EMC?

EMC stands for "Electromagnetic compatibility" and describes the capability of a device to function satisfactorily in an electromagnetic environment without itself causing electromagnetic interference unacceptable for other devices in the environment. Therefore, the various devices used should not cause interference to one another.

Within the context of the EMC Directive, the SINAMICS DCM described in this document are not "devices" at all, but instead "components" that are intended to be installed in an overall plant or system. For reasons of clarity, however, the generic term "devices" is used in many cases.

Interference and immunity

EMC is dependent upon two properties demonstrated by the devices involved in the system: interference and immunity. Electrical devices may be sources of interference (senders) and/or potentially susceptible equipment (receivers).

Electromagnetic compatibility is ensured when the existing sources of interference do not impair the function of potentially susceptible equipment.

A device may even be a source of interference and potentially susceptible equipment at the same time: For example, the power unit of a converter should be viewed as a source of interference and the control unit as potentially susceptible equipment (interference sink).

Product standard IEC 61800-3

Product standard IEC 61800-3 describes the EMC requirements for "Adjustable-speed electrical power drive systems". A variable-speed drive system (or Power Drive System PDS) consists of the drive converter and the electric motor including the connecting cables. The driven machine is not part of the drive system. IEC 61800-3 defines different limit values depending on the installation site of the drive system, referred to as the first and second environments.

Residential buildings or locations at which the drive system is directly connected to a public low-voltage network without an intermediate transformer are defined as the **first environment**.

The term **second environment** refers to all locations outside residential areas. These are basically industrial areas that have their own medium-voltage supply via their own transformers.

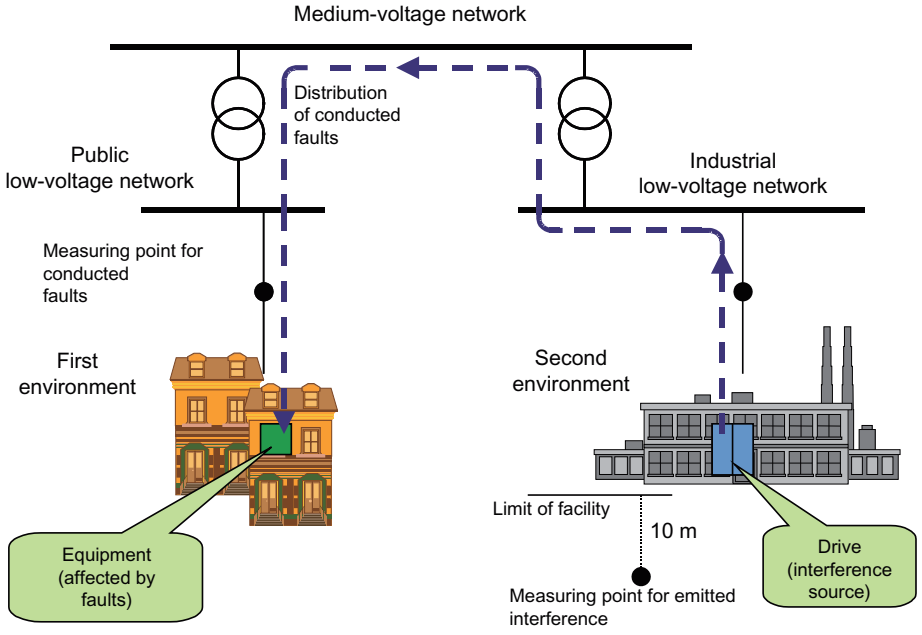

Figure 6-1 Definition of the first and second environment

Categories

Depending on the installation site and the drive power, four different categories are defined in IEC 61800-3 with regard to the limit values for interference and two (operating) environments with regard to the requirements on immunity:

- Category C1:
  Drive systems for rated voltages < 1000 V for unrestricted use in the first environment.
- Category C2:
  Stationary drive systems for rated voltages < 1000 V for use in the second environment. Use in the first environment is possible if the drive system is distributed and installed by qualified personnel. The warning information and installation instructions supplied by the manufacturer must be observed.

  ⚠ CAUTION

  Use in a residential environment

  In a residential environment, the drive may cause radio interference. In such cases, supplementary interference suppression measures may be required.

  - Have the installation and commissioning with appropriate radio interference suppression measures performed by qualified personnel.

- Category C3:
  Drive systems for rated voltages < 1000 V for exclusive use in the second environment

  ⚠ CAUTION

  Use in a residential environment

  The device is not intended for use in a residential environment, and cannot ensure appropriate protection of radio reception in environments such as these.

  - Do not use this device in the first environment (residential area).

- Category C4:
  Drive systems for rated voltages ≥ 1000 V or for rated currents ≥ 400 A for use in complex systems in the second environment

The figure below shows how the four categories are assigned to the first and second environments:

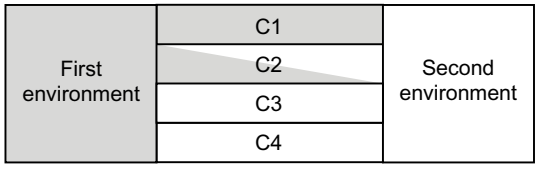

Figure 6-2 Definition of categories C1 to C4

SINAMICS DCM devices are almost exclusively used in the second environment (Categories C3 and C4).

Radio interference suppression filters and commutating reactors are required whenever they are to be used in Category C2.

SINAMICS DCM conform to the immunity requirements defined in IEC 61800-3 for the second environment, and therefore also with the lower immunity requirements in the first environment.

SINAMICS DCM, use in industrial environments

SINAMICS DCM converter units are used in industrial areas and are components of an electrical drive. In order to limit the interference in compliance with the limit value for category C2 according to IEC 61800-3, radio interference suppression filters are required in the line supply feeder cables for the armature and field power units and the commutating reactors.

Non-grounded networks

Non-grounded networks (IT systems) are used in some branches of industry in order to increase the availability of the plant. In the event of a ground fault, no fault current flows and the plant can continue with production. If RFI suppression filters are brought into the equation, however, a fault current does flow in the event of a ground fault, which may cause the drives to shut down or the RFI suppression filter to potentially be destroyed. For this reason, the product standard does not define any limit values for these networks. From an economic perspective, any radio interference suppression measures required should be carried out on the grounded primary side of the supply transformer.

EMC planning

If two devices are not electromagnetically compatible, you can reduce the interference level of the source of interference or increase the immunity of the potentially susceptible equipment. Sources of interference are generally power electronics devices with high current consumption; reducing their interference levels requires complex filters. Potentially susceptible equipment usually refers to controlgear and sensors, including their evaluation circuit. There is less work involved in increasing the immunity of inefficient devices, meaning that - from an economic perspective - increasing immunity is generally a more favorable option for industrial applications than reducing the interference level.

In industrial applications, EMC between devices should be based on a carefully balanced combination of the interference and immunity levels.

The most cost-effective measure that can be put in place to achieve EMC conformance is to physically separate sources of interference and potentially susceptible equipment - provided that you have taken this option into account during the planning stage of your machine/ plant. In the first instance, it is necessary to determine whether each unit used is a potential source of interference or potentially susceptible equipment. Within this context, converter units and contactors, for example, can be counted as sources of interference. While examples of potentially susceptible equipment (interference sinks) include PLCs, encoders and sensors.

The components in the control cabinet (sources of interference and potentially susceptible equipment) must be physically separated, by means of partition plates if necessary, or by installing them in metal enclosures.

6.1.2 EMC-compliant drive installation (installation instructions)

General information

Not only are drives operated in a wide variety of environments, but the electrical components used (controllers, switch mode power supplies, and so on) can also differ widely with respect to interference immunity and interference emission levels, meaning that all installation guidelines of any kind can offer is a practical compromise. For this reason, EMC rules do not need to be implemented to the letter in all cases, provided that measures are tested on a case-by-case basis.

In order to ensure electromagnetic compatibility (EMC) in your control cabinets in rugged electrical environments and adhere to the standards required by the relevant legislating body, the EMC rules listed below should be followed during the construction and design stages.

Rules 1 to 10 apply on a general level. Rules 11 to 15 must be followed in order to fulfill interference emission standards.

Rules for EMC-compliant installation

1. Connect all metallic parts of the control cabinet to one another over a flat area with good conductivity (not paint against paint!). Use contact or scratch washers if necessary. The cabinet door must be connected to the cabinet using the shortest possible ground strips (at the top, center, and bottom).
2. Contactors, relays, solenoid valves, electromechanical operating hours counters, etc., in the cabinet and - where applicable - in neighboring cabinets - must be provided with quenching combinations such as RC elements, varistors, and diodes. These must be connected directly at the appropriate coil.
3. Whenever possible, guide signal cables [1)] into the cabinet at one level only.
4. Unshielded cables in the same circuit (outgoing/incoming conductors) must be twisted where possible, or the area between them minimized, to prevent unnecessary frame antennae.
5. Connect spare wires to the cabinet ground [2)] at both ends. This achieves an additional shielding effect.
6. Avoid unnecessary cable lengths in order to keep coupling capacities and inductances low.
7. Crosstalk is generally reduced if the cables are laid close to the control cabinet ground. Do not, therefore, route cables freely around the cabinet, but lay them as close as possible to the cabinet enclosure/mounting plates. This also applies to spare cables.
8. Signal and power cables must be physically separated (to prevent coupling paths). Minimum clearance: You should aim for a minimum of 20 cm.
   If it is not possible to physically separate the encoder and motor cables, the encoder cable must be decoupled either using a metal partition or by laying it in a metal conduit. The partition or metal conduit must be grounded at several points.

9 Ground the shields of digital signal cables at both ends (source and destination), ensuring maximum contact area and good conductivity. In the event of poor equipotential bonding between the shield connections, run an additional equalizing conductor with a cross-section of at least 10 mm² parallel to the shield for the purpose of reducing the shield current. Generally speaking, the shields may also be connected to the cabinet enclosure (ground) [2)] at several points, and connected at several points outside the control cabinet.
Foil shields should be avoided as they are are at least 5 times less effective than braided shields.

10 Shields for analog signal cables may be connected to ground at both ends if equipotential bonding is good (this must be done over a large area with good conductivity). It can be assumed that equipotential bonding is good if all metal parts are well interconnected and the electronics components are supplied from a single source.

Connecting a shield at one end prevents low-frequency, capacitive interference from being coupled in (e.g. 50 Hz hum). In this case, the shield should be connected in the control cabinet; a sheath wire may also be used for this purpose.

The cable to the temperature sensor on the motor (X177:53 to 55) must be shielded. The shield must be connected to ground at both ends.

11 Ensure that the RFI suppression filter is always located close to the suspected source of interference. The filter must be attached to the cabinet enclosure, mounting plate, etc., over a flat area. Incoming and outgoing cables must be physically separated.

12 RFI suppression filters must be used in order to conform to limit value class A1. Additional loads must be connected upstream of the filter (on the line side).
The controller used and the manner in which the rest of the control cabinet is wired will determine whether an additional line filter needs to be installed.

13 A line reactor must be included in the field circuit for controlled field power supplies.

14 A line reactor must be included in the armature circuit of the converter.

15 The motor cables do not have to be shielded. There must be a clearance of at least 20 cm between the line supply feeder cable and the motor cables (field, armature). Use a partition if necessary.

Footnotes

1) Signal cables are defined as:
Digital signal cables: e.g. cables for incremental encoders
Analog signal cables: e.g. ±10 V setpoint cable
Serial interfaces: e.g. PROFIBUS-DP

2) Generally speaking, "ground" refers to all metallic conductive parts that can be connected to a protective conductor, such as the cabinet enclosure, motor enclosure or foundation ground.

Cabinet configuration and shielding

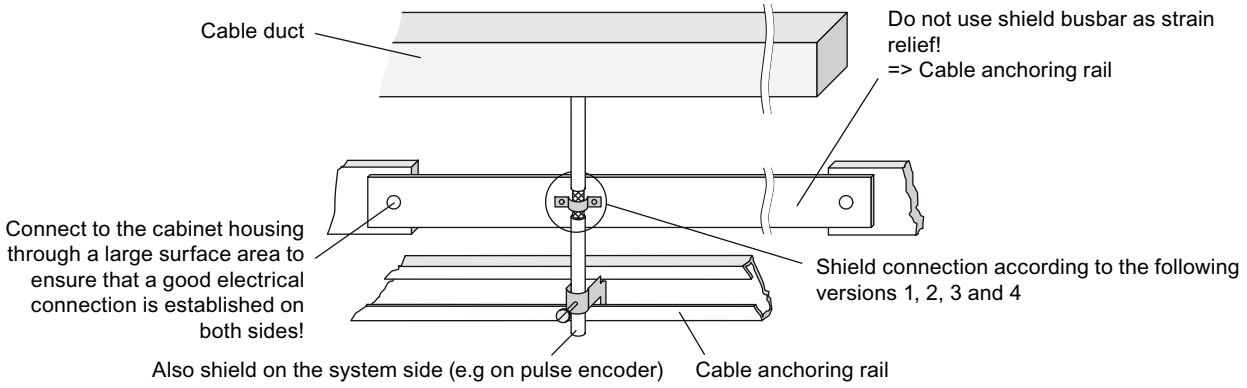

Figure 6-3 Shielding at control cabinet inlet

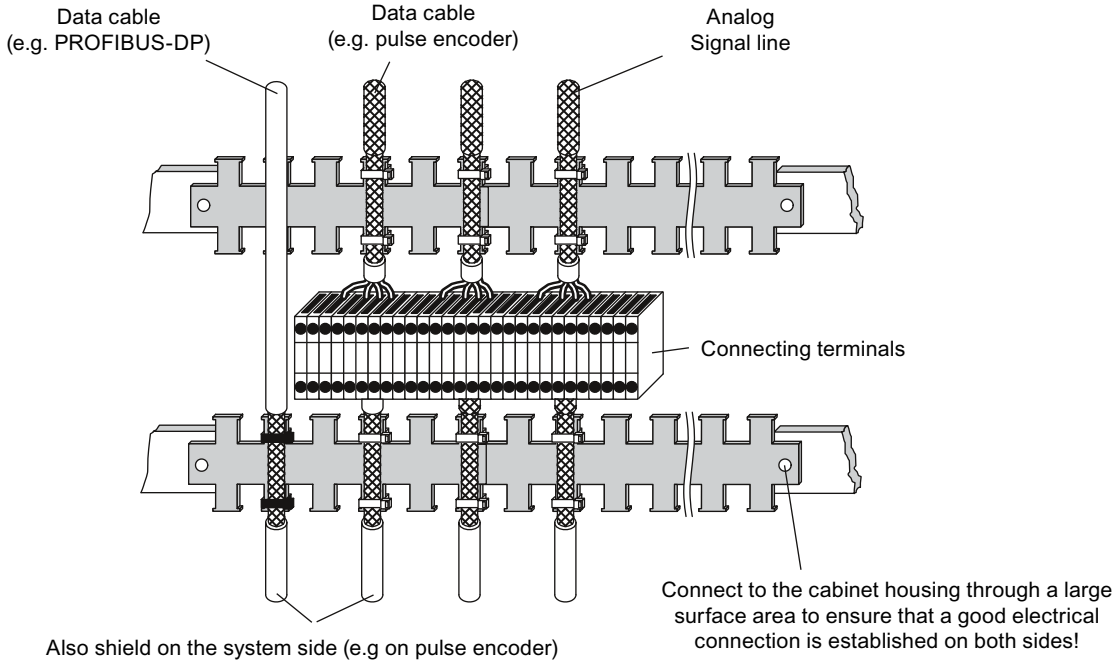

Figure 6-4 Shielding in control cabinet

Connecting shields to the SINAMICS DCM

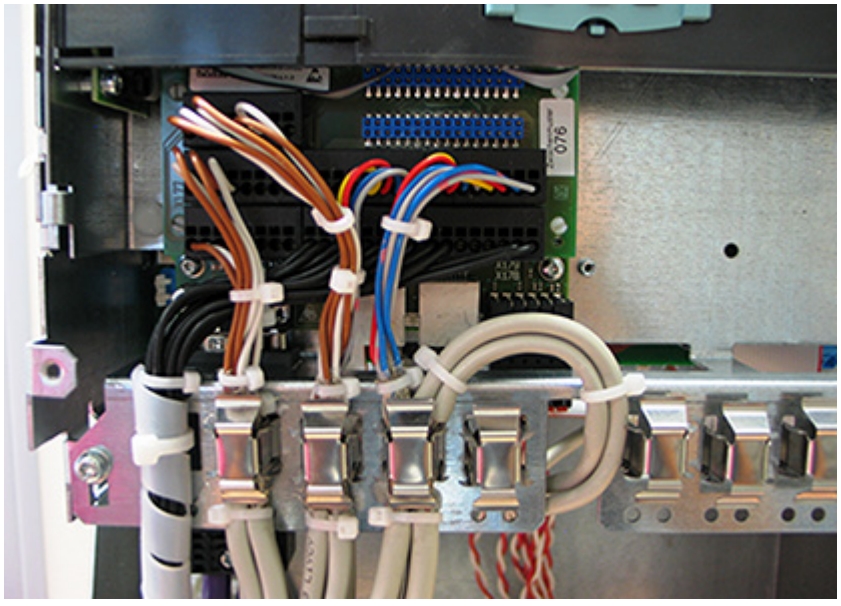

Figure 6-5 Connecting shields

Note

The strain relief of shielded cables and the shield support must be mechanically decoupled from one another.

Radio interference suppression filters for the field circuit

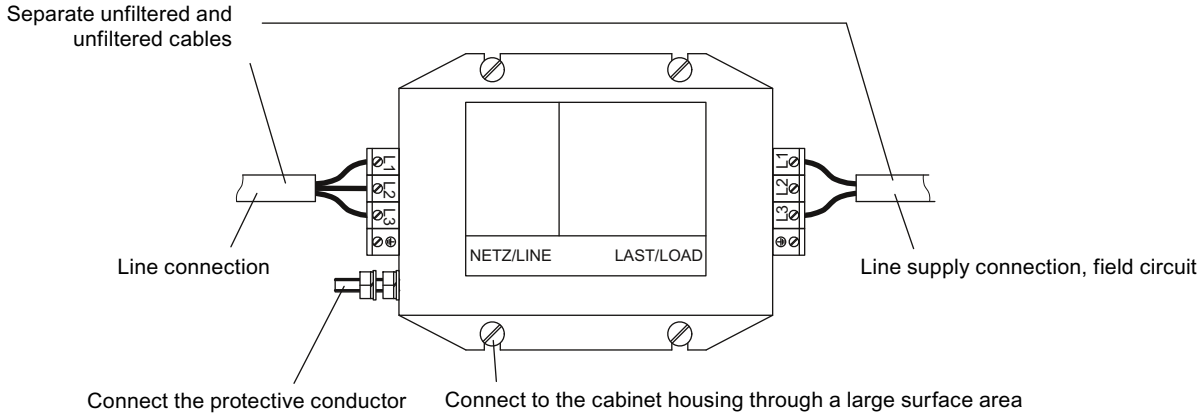

Figure 6-6 Radio interference suppression filter

Shield connection

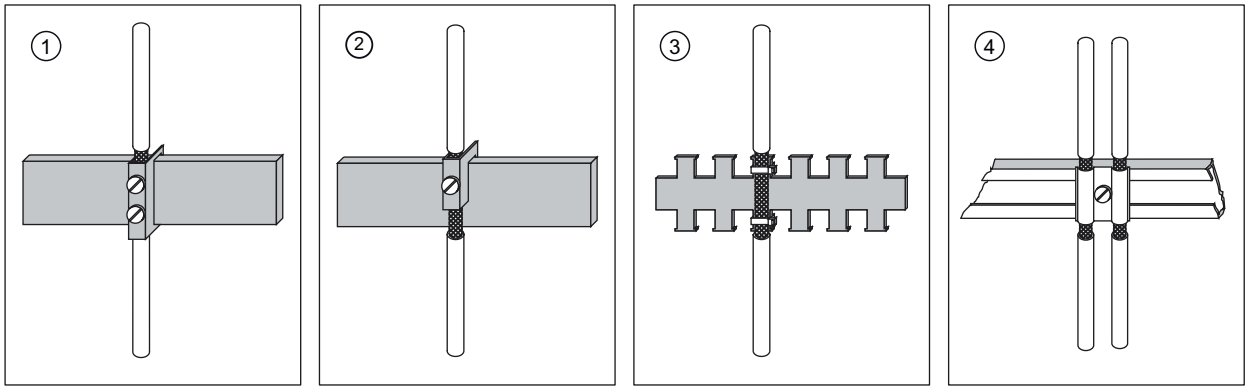

① Connecting terminal on copper bar, max. cable diameter 15 mm
Notice! Risk of pinching cable if screws tightened too much

② Bus-mounting terminal on copper bar, max. cable diameter 10 mm
Notice! Risk of pinching cable if screws tightened too much

③ Metal tube or cable tie on bare metal comb-type/toothed bar

④ Clamp with metallic backing plate on cable support rail

Figure 6-7 Shield connection

6.1.3 Arranging components for converter units

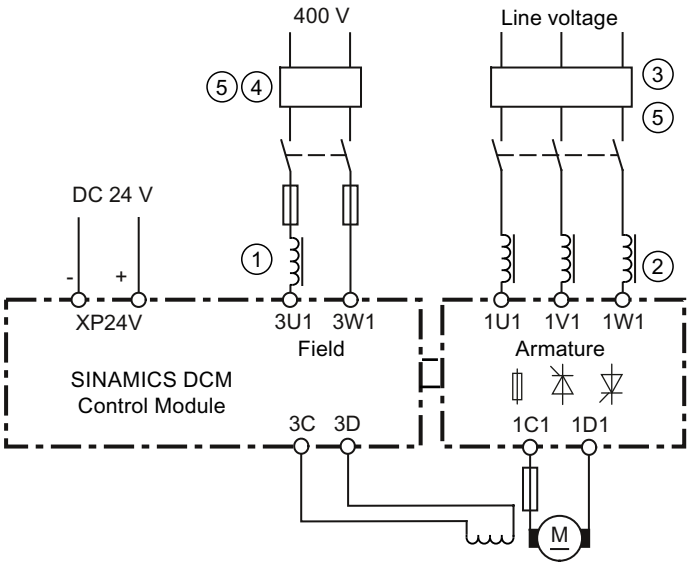

① The line reactor in the field circuit is dimensioned for the rated current of the motor field.

② The line reactor in the armature circuit is dimensioned for the rated motor current in the armature. The line current equals 0.82 times the DC current.

③ The RFI suppression filter for the armature circuit is dimensioned for the rated motor current in the armature. The line current equals 0.82 times the DC current.

④ The RFI suppression filter for the field circuit is dimensioned for the motor field's rated current.

⑤ If the supply voltages for the armature circuit and field circuit are the same, the supply voltages for the field can also be taken after the radio interference suppression filter for the armature circuit. In this case, the radio interference suppression filter must be dimensioned for the sum of the rated armature current times 0.82 and the rated field current. The armature circuit and the field circuit must always be separately protected.

Figure 6-8 Arrangement of reactors and RFI suppression filters

NOTICE

Use of radio interference suppression filters

When RFI suppression filters are being used, line reactors must always be used at the unit input to decouple the TSE circuit.

An incorrect arrangement can destroy a thyristor (short-circuit) and rupture a fuse.

- The components must be wired in the following order:
  Line supply – radio interference suppression filter – commutating reactor – power unit.

6.1.4 Radio interference suppression filter

Table 6-1 Suggested RFI suppression filters from "TDK Electronics AG (previously EPCOS AG)"

Rated AC current Radio interference suppression filter A	**TN / TT line supply V**	**Weight kg**	**IT line system V**	**Terminal cross-section mm² Hole for the screw M***	**Article number TDK Electronics AG (previously EPCOS AG)**	**Article number SIEMENS**
Line filters for armature circuit						
25	760/440	4	580/335	Terminal 10 mm²	B84143A0025R021	-
50	760/440	4	580/335	Terminal 10 mm²	B84143A0050R021	-
80	760/440	9.5	630/365	Terminal 25 mm²	B84143A0080R021	6RX1800 - 0LF03
120	760/440	10	630/365	Terminal 50 mm²	B84143A0120R021	6RX1800 - 0LF13
180	-	13	690/400	M10	B84143B0180S024	6RX1800 - 0KF00
180	520/300	5	360/208	M10	B84143B0180S080	6RX1800 - 0GF00
180	760/440	5	560/320	M10	B84143B0180S081	6RX1800 - 0LF04
250	520/300	5	360/208	M10	B84143B0250S080	6RX1800 - 0GF01
250	760/440	5	560/320	M10	B84143B0250S081	6RX1800 - 0LF14
400	-	21	690/400	M10	B84143B0400S024	6RX1800 - 0KF02
400	520/300	7.5	360/208	M10	B84143B0400S080	6RX1800 - 0GF03
400	760/440	7.5	560/320	M10	B84143B0400S081	6RX1800 - 0LF07
600	-	22	690/400	M10	B84143B0600S024	6RX1800 - 0KF03
600	520/300	7.8	360/208	M10	B84143B0600S080	6RX1800 - 0GF04
600	760/440	7.8	560/320	M10	B84143B0600S081	6RX1800 - 0LF08
1000	-	28	690/400	M12	B84143B1000S024	6RX1800 - 0KF04
1000	520/300	18.5	360/208	M12	B84143B1000S080	6RX1800 - 0GF05
1000	760/440	18.5	560/320	M12	B84143B1000S081	6RX1800 - 0LF10
1600	-	34	690/400	2 x M12	B84143B1600S024	6RX1800 - 0KF05
1600	520/300	24.5	360/208	2 x M12	B84143B1600S080	6RX1800 - 0GF06
1600	760/440	24.5	560/320	2 x M12	B84143B1600S081	6RX1800 - 0LF11
2500	530/310	105	460/265	4 x M12	B84143B2500S020	6RX1800 - 0GF07
2500	760/440	105	560/320	4 x M12	B84143B2500S021	6RX1800 - 0LF12
2500	-	105	690/400	4 x M12	B84143B2500S024	6RX1800 - 0KF06
Line filters for auxiliary power supply						
25 A	520/300 A	1.1	440/255 A	Terminal 4 mm²	B84143A0025R105	6RX1800 - 1GF00
50 A	520/300 A	1.75	440/255 A	Terminal 10 mm²	B84143A0050R105	-
66 A	520/300 A	2.70	440/255 A	Terminal 16 mm²	B84143A0066R105	6RX1800 - 1GF02
90 A	520/300 A	4.20	440/255 A	Terminal 35 mm²	B84143A0090R105	-
120 A	520/300 A	4.90	440/255 A	Terminal 35 mm²	B84143A0120R105	6RX1800 - 1GF04

Operating temperature 0 °C to 40 °C.

Rated frequency 50 / 60 Hz (± 6%).

Additional information on the radio interference suppression filters can be found on the Internet page of "TDK Electronics AG (previously EPCOS AG)" (Epcos (http://en.tdk.eu))

Radio interference suppression filters generate leakage currents. In accordance with IEC 61800-5-1, a PE connection with a cross-section of 10 mm^2 is required. For the filters to have maximum effect, it is absolutely essential that they and the device are installed on a single metal plate.

In the case of converters with a 3-phase connection, the minimum rated current of the filter is the same as the device's input current or output DC current, as specified on the device rating plate (see Armature Input and Armature Output respectively), times 0.82.

In the case of a two-phase connection (field supply), only two phases are connected to the three-phase radio interference suppression filter. In this case, the minimum rated current of the filter is the same as the input current (see Field input) or field DC current specified on the device rating plate.

6.1.5 Information on line-side harmonics produced by converter units in a fully-controlled two-pulse bridge circuit configuration (B6C and (B6)A(B6)C)

The majority of converter units for medium-power applications have a fully-controlled three-phase bridge circuit. Below is an example of the harmonics that can be found in a typical system configuration for two firing angles (α = 20° and α = 60°).

The values have been taken from a previous publication, "Oberschwingungen im netzseitigen Strom sechspulsiger netzgeführter Stromrichter (Harmonics in the Line-Side Current of Six-Pulse, Line-Commutated Converters)" by H. Arremann and G. Möltgen, Siemens Research and Development Division, Volume 7 (1978) No. 2, © Springer-Verlag 1978.

In addition, the formulas are specified which, depending on the actual operating data in use [line voltage (no-load voltage U_{v0}), line frequency f_N, and DC current I_d], can be used to calculate the short-circuit power S_K and armature inductance L_a for the motor for which the specified harmonics spectrum applies. If the actual line short-circuit power and/or actual armature inductance deviate from the values calculated in this way, then they will need to be calculated on a case-by-case basis.

The harmonics spectrum listed below is produced if the values for the short-circuit power S_K at the connection point of the device and the armature inductance L_a of the motor, calculated using the formulas below, match the actual system values. If the values do not match, the harmonics will have to be calculated separately.

a) α = 20°
Fundamental factor g = 0.962

v	I_v / I_1	v	I_v / I_1
5	0.235	29	0.018
7	0.100	31	0.016
11	0.083	35	0.011
13	0.056	37	0.010
17	0.046	41	0.006
19	0.035	43	0.006
23	0.028	47	0.003
25	0.024	49	0.003

b) α = 60°
Fundamental factor g = 0.953

v	I_v / I_1	v	I_v / I_1
5	0.283	29	0.026
7	0.050	31	0.019
11	0.089	35	0.020
13	0.038	37	0.016
17	0.050	41	0.016
19	0.029	43	0.013
23	0.034	47	0.013
25	0.023	49	0.011

The fundamental component of current I_1 as a reference variable is calculated using the following formula

$I_1 = g \times 0.817 \times I_d$

where I_d is the DC current of the operating point under investigation
and where g is the fundamental factor (see previous table)

The harmonic currents calculated according to the previous table **only** apply for:

I.) Short-circuit power S_K at the location where the converter is connected

$S_K = U^2_{v0} / X_N$ (VA)

with

$X_N = X_K - X_D = 0.03526 \times U_{v0} / I_d - 2\pi f_N \times L_D$ (Ω)

and

U_{v0} No-load voltage on the power unit terminal V
I_d Direct current of the operating point examined in A
f_N Line frequency in Hz
L_D Inductance of the commutating reactors used in H
X_D Impedance of the commutating reactor
X_N Impedance of the line
X_K Impedance at the unit terminals

II.) Armature inductance L_a

$L_a = 0.0488 \times U_{v0} / (f_N \times I_d)$ (H)

If the actual values for the short-circuit power S_K and/or armature inductance L_a deviate from the values calculated using the previous formulas, a separate calculation procedure will need to be carried out.

Example:

Let us assume a drive with the following data:

$U_{v0} = 400$ V
$I_d = 150$ A
$f_N = 50$ Hz
$L_D = 0.169$ mH (4EU2421-7AA10 with $I_{Ln} = 125$ A)

With
$X_N = 0.03536 \times 400 / 150 - 2\pi \times 50 \times 0.169 \times 10^{-3} = 0.0412$ Ω

the network short-circuit power at the converter unit terminal is as follows:

$S_K = 400^2 / 0.0412 = 3.88$ MVA

and the armature inductance of the motor is as follows:

$L_a = 0.0488 \times 400 / (50 \times 150) = 2.60$ mH

The harmonic currents I_v (with $I_1 = g \times 0.817 \times I_d$ for firing angles $\alpha = 20°$ and $\alpha = 60°$) that can be taken from the tables, **only** apply for the values S_K and L_a that have been calculated in this way. If the actual values deviate from these, a separate calculation will have to be made.

For the purpose of dimensioning filters and compensation equipment with reactors, it is only possible to draw on the information provided by the harmonics values calculated in this way if the values calculated for S_K and L_a match the actual drive values. In all other cases, a separate calculation procedure needs to be carried out (this particularly applies when using machines with compensation, as they demonstrate a very low armature inductance level).

6.1.6 Data on the line-side harmonics from converter units in a fully-controlled AC bridge circuit B2C

Converter units for lower power ratings can be connected and parameterized as fully-controlled AC bridge circuit.

Below is an example for the current harmonics of a typical system configuration of a field excitation controller (this is a system with a large DC circuit inductance). The case with the highest harmonic load of the line supply has been selected here.

For every motor used, a separate investigation must be performed to determine the actual harmonic load. In any case, the result will be less than in the example shown.

For comparison purposes, the table also includes the harmonic load of a B6C three-phase bridge at the same operating point as the field excitation controller.

Harmonic order	B2C [2]	B6C [2]	Harmonic order	B2C [2]	B6C [2]
v	Iv / I	Iv / I	v	Iv / I	Iv / I
1 [1]	90.1%	95.6%	27	3.3%	
3	30.0%		29	3.1%	3.3%
5	18.0%	19.1%	31	2.9%	3.1%
7	12.9%	13.7%	33	2.7%	
9	10.0%		35	2.6%	2.7%
11	8.2%	8.7%	37	2.4%	2.6%
13	6.9%	7.4%	39	2.3%	
15	6.0%		41	2.2%	2.3%
17	5.3%	5.6%	43	2.1%	2.2%
19	4.7%	5.0%	45	2.0%	
21	4.3%		47	1.9%	2.0%
23	3.9%	4.2%	49	1.8%	2.0%
25	3.6%	3.8%			

[1] Fundamental content
[2] converter circuit

6.1.7 Electromagnetic fields at the workplace

Protection of workers from electromagnetic fields is specified in the European EMF Directive 2013/35/EU. This directive is implemented in national law in the European Economic Area (EEA). Employers are obligated to design workplaces in such a way that workers are protected from impermissibly strong electromagnetic fields. To this end, assessments and/or measurements must be performed for workplaces.

General conditions for correct assessment or measurement

1. The laws for protection from electromagnetic fields in force in individual EU member states can go beyond the minimum requirements of the EMF Directive 2013/35/EU and always take precedence.
2. The ICNIRP 2010 limits for the workplace are the basis for the assessment.

3. The 100 µT (RMS) mentioned below for assessment of active implants comes from the 26th BImSchV (Bundesimmissionsschutz Verordnung der Bundesrepublik Deutschland [German Federal Emission Protection Regulation]).
   According to Directive 2013/35/EU, 500 µT (RMS) at 50 Hz is applicable here.
4. Compliance with the limit values was checked for the following frequencies:
   – Line frequency 45 ... 65 Hz (see system data)
5. The routing of power cables has a significant impact on the electromagnetic fields that occur.

6.2 Cable routing in the device

Cable routing example

Note

Cables, which are not mechanically fixed in the device, must be externally fixed.

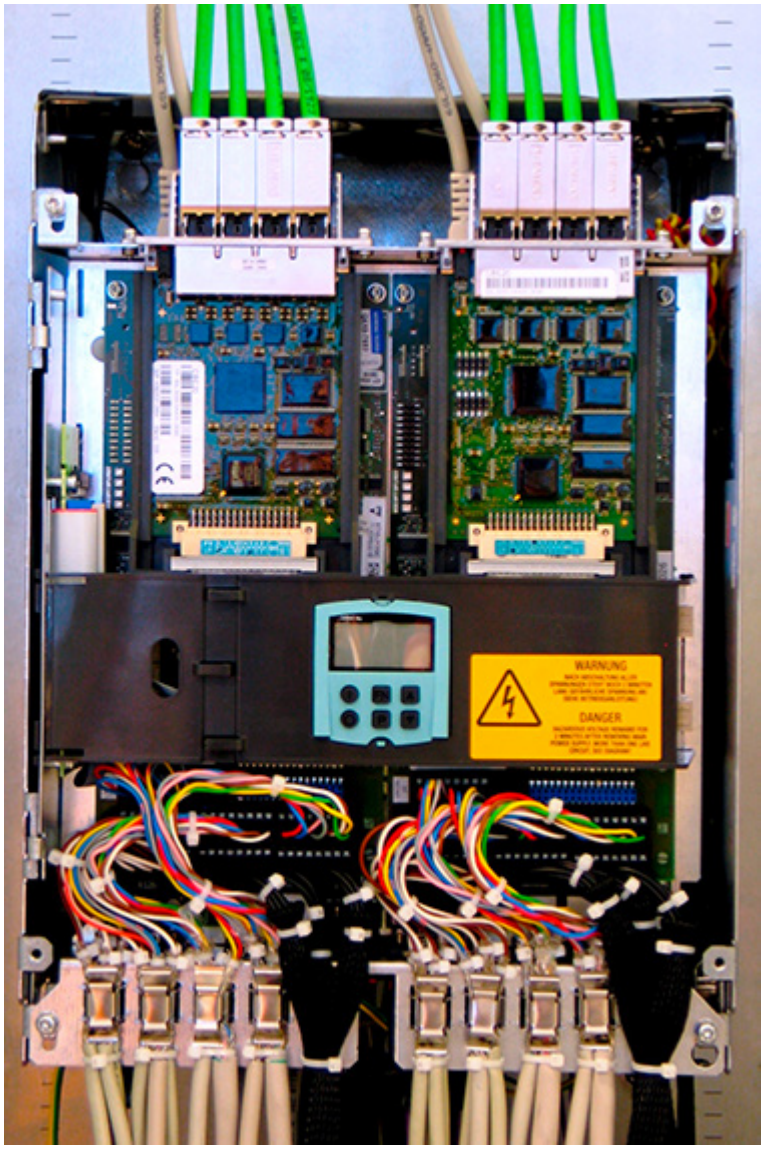

Figure 6-9 Example for cable routing when fully expanded

Note

The PROFINET cables must be routed into the device from the top (PROFINET is only available with Communication Board(s) CBE20).

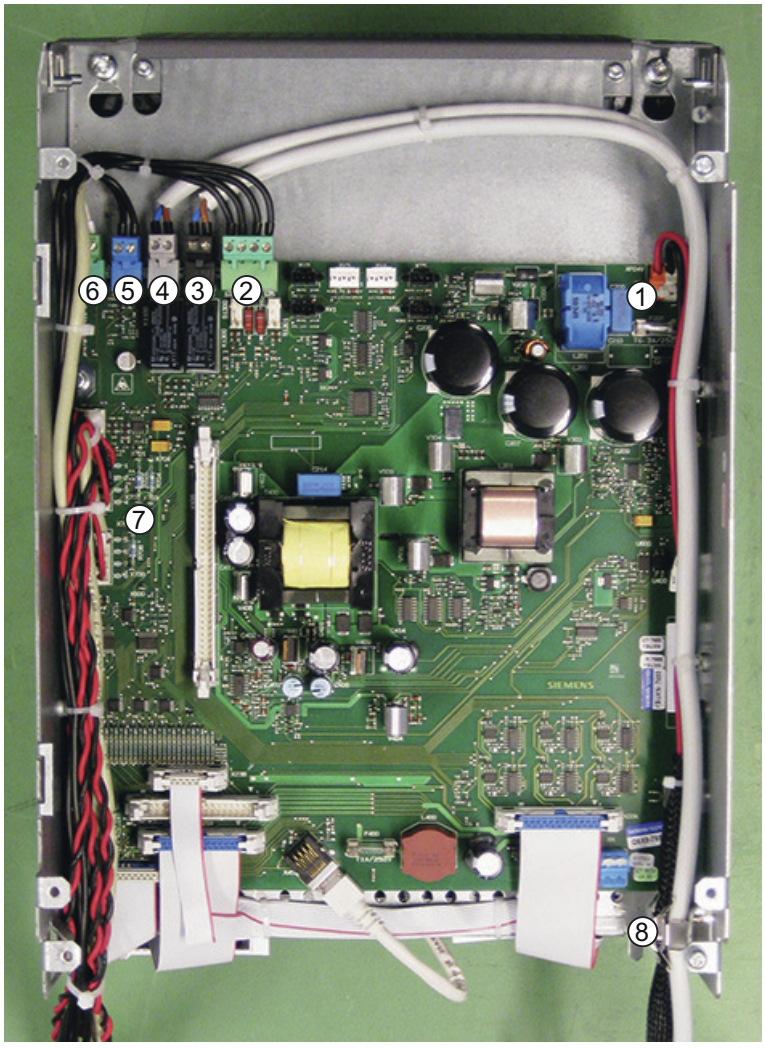

① XP24V, electronics power supply connection
② XL1, fan monitoring input, external fault input
③ XL2, floating relay output for the fan. Mechanically attach the cable using one of the shield clamps ⑧ at the side of the enclosure.
④ XR1, floating relay output for the line contactor. Mechanically attach the cable using one of the shield clamps ⑧ at the side of the enclosure.
⑤ XS1, E-STOP connection
⑥ XT1, analog tachometer connection
⑦ XB, current transformer connection

Route all cables into the device from the bottom. Cable clamps are provided at the side panels to mechanically fix the cables.

Figure 6-10 Cable routing, power interface

PROFIBUS cable connection (cannot be seen in the previous diagrams):

1. Route the PROFIBUS cables into the device from the bottom
2. Screw the PROFIBUS bus connector to connector X126 at the CUD using the two screws
3. A shield support is not required in the device



⚠ WARNING

Electric shock during connection while voltage is present

When connecting the PROFIBUS cable while voltage is present, there is a danger of coming into contact with live components behind the terminal.

Touching live components can result in death or serious injury.

- Only connect the PROFIBUS cable to connector X126 when the unit is in a de-energized state.

Note

Routing the PROFIBUS connection

If the PROFIBUS bus connector is connected and removed in a system during operation, the system manufacturer must ensure that the PROFIBUS connection is routed outwards.

Routing the functional safety cable

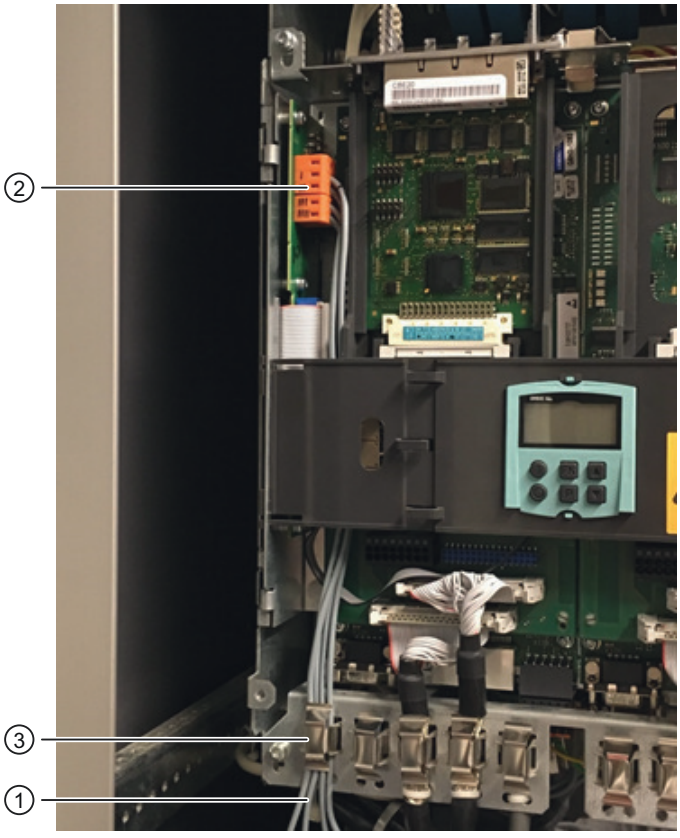

① Route the cable into the device from the bottom.
② Connect the cable to terminals X200, X201.
③ Strain relief of the cables through positioning on shield clamps on the lower edge of the housing.

Figure 6-11 Routing the functional safety cable

Note

It is not required to use shielded cables and shield connection in the device.

6.3 Block diagram with connection suggestion

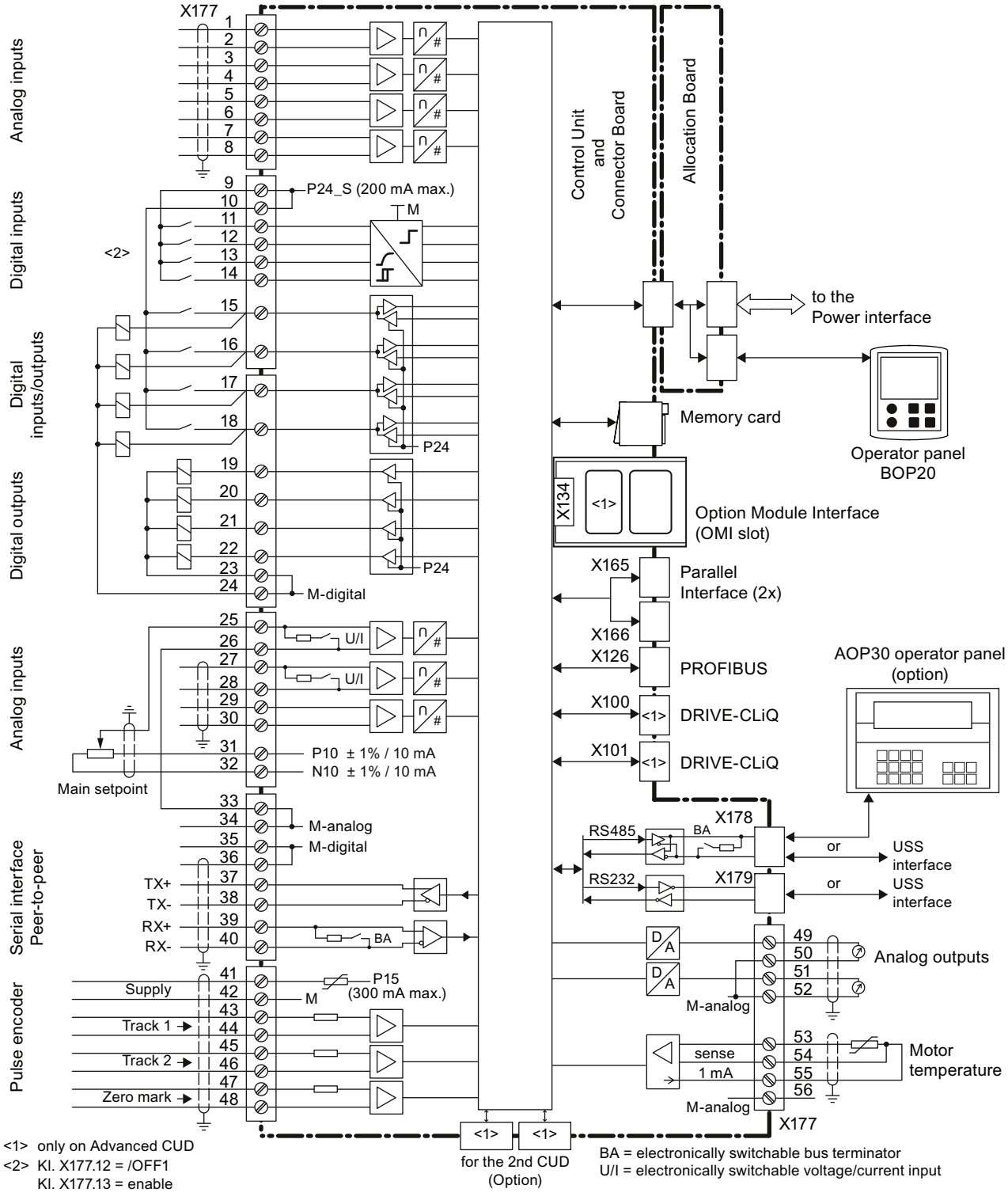

Figure 6-12 Open-loop/closed-loop control section block diagram

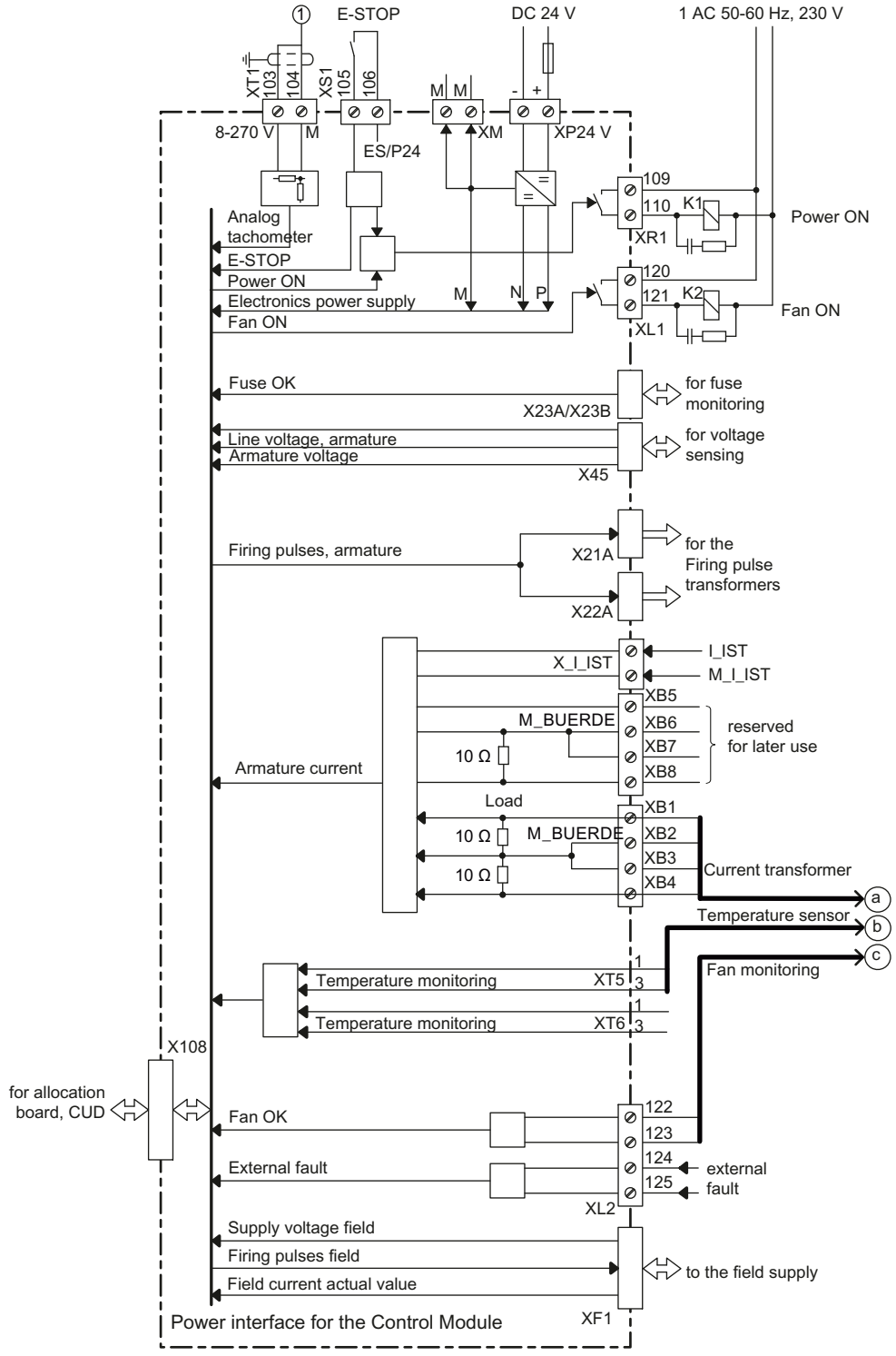

Figure 6-13 Block diagram for power interface

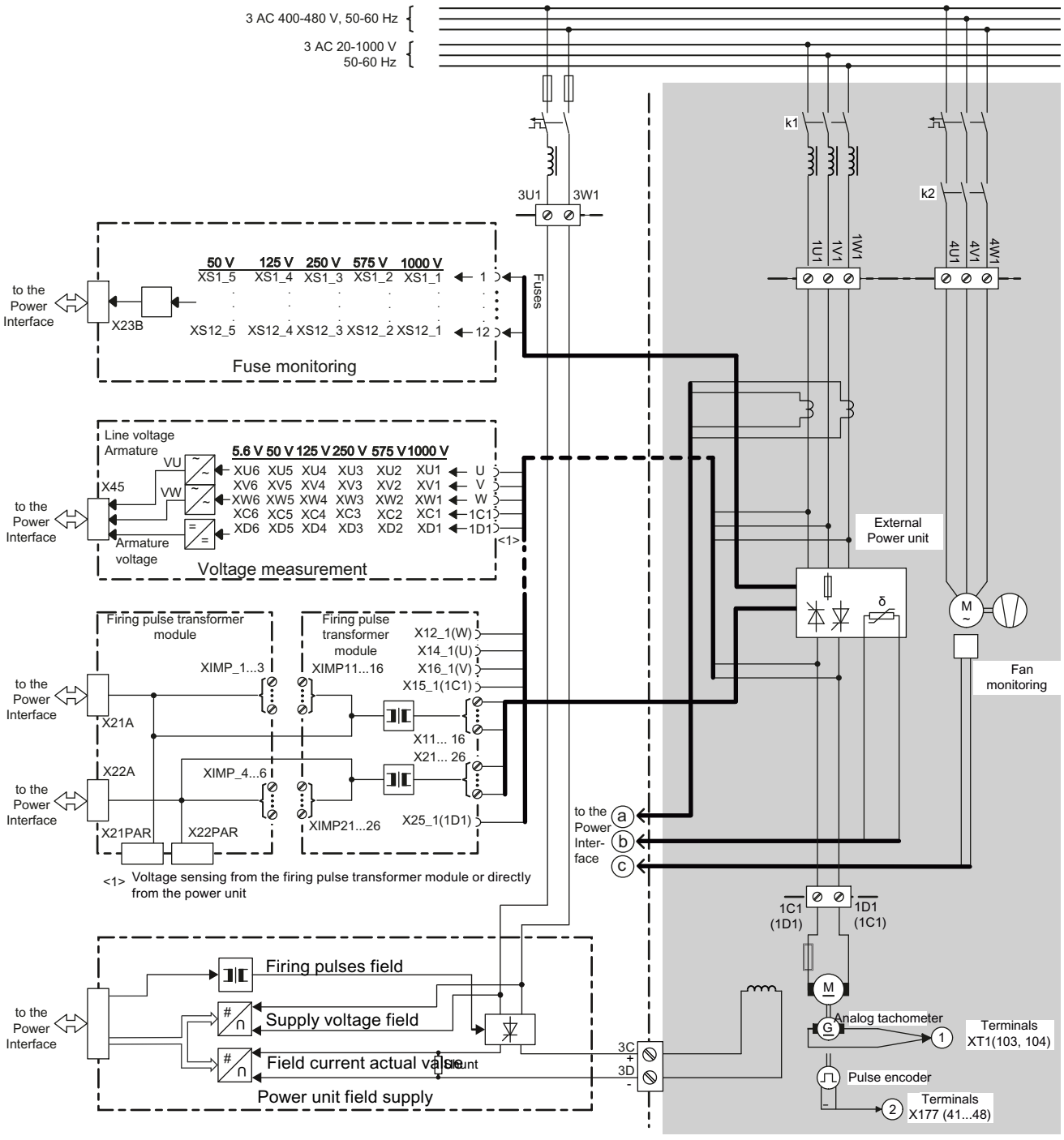

Figure 6-14 Block diagram for fuse monitoring/voltage measurement equipment, firing pulse transformers, power unit

6.4 Connecting the external power unit

The following 5 figures show all the required connections to the power unit.

- Figure: "Connection of a 4-quadrant power unit (1)":
  - 4-quadrant drive (parameters assigned for a 4-quadrant drive as delivered - p51825 = 4)
  - Line voltage and armature voltage measured via Faston terminals on the firing pulse transformer module (as delivered)
- Figure: "Connection of a 4-quadrant power unit (2)":
  - 4-quadrant drive (parameters assigned for a 4-quadrant drive as delivered - p51825 = 4)
  - Line voltage and armature voltage measured via cables directly from the power unit
- Figure: "Connection of a 2-quadrant power unit (1)":
  - 2-quadrant drive (parameter assignment using parameter p51825 = 2)
  - Line voltage and armature voltage measured via Faston terminals on the firing pulse transformer module (as delivered). The armature current can only be measured if a connection is made to 1D1 on the power unit.
- Figure: "Connection of a 2-quadrant power unit (2)":
  - 2-quadrant drive (parameter assignment using parameter p51825 = 2)
  - Line voltage and armature voltage measured via cables directly from the power unit
- Figure: "Connections to the power interface":
  - Connection of fan contactor, fan monitoring equipment, temperature sensors on the heat sink, external monitoring equipment

⚠ WARNING

Electric shock due to incorrectly replaced lines

In its delivered state, the Control Module (both plates mounted on top of each other) is equipped with connection cables for voltage sensing devices. If the device is mounted in another form, (according to the descriptions in Chapter "Division options (Page 96)"), the existing connection cables must be replaced 1:1 by longer cables accordingly.

The cables installed ex works are of type Spec 44 with a voltage rating of 2500 V. The replacement cables must be selected according to the criteria for routing unprotected active cables according to EN 61439-1.

Please refer to the Chapter "Division options (Page 96)" for options on how to position the two plates and how the unit can be divided.

⚠ WARNING

Electric shock due to non-fused electrical connections

The following electrical connections between the power unit (line voltage) and the electronics are affected:

- Secondary sides of the firing pulse transformers
- Voltage sensing devices
- Fuse monitoring equipment

All these cables must be routed according to the criteria for routing unprotected active cables.

- Route the cables between the plates so that a ground fault or short-circuit can be ruled out.
- Comply with local installation regulations, which allow this fault to be ruled out.
- Protect the cables from mechanical damage.
- Apply one of the following measures:
  - Use cables with double insulation.
  - Observe adequate clearances, e.g. through the use of spacers.
  - Route the cables in separate cable ducts or pipes.

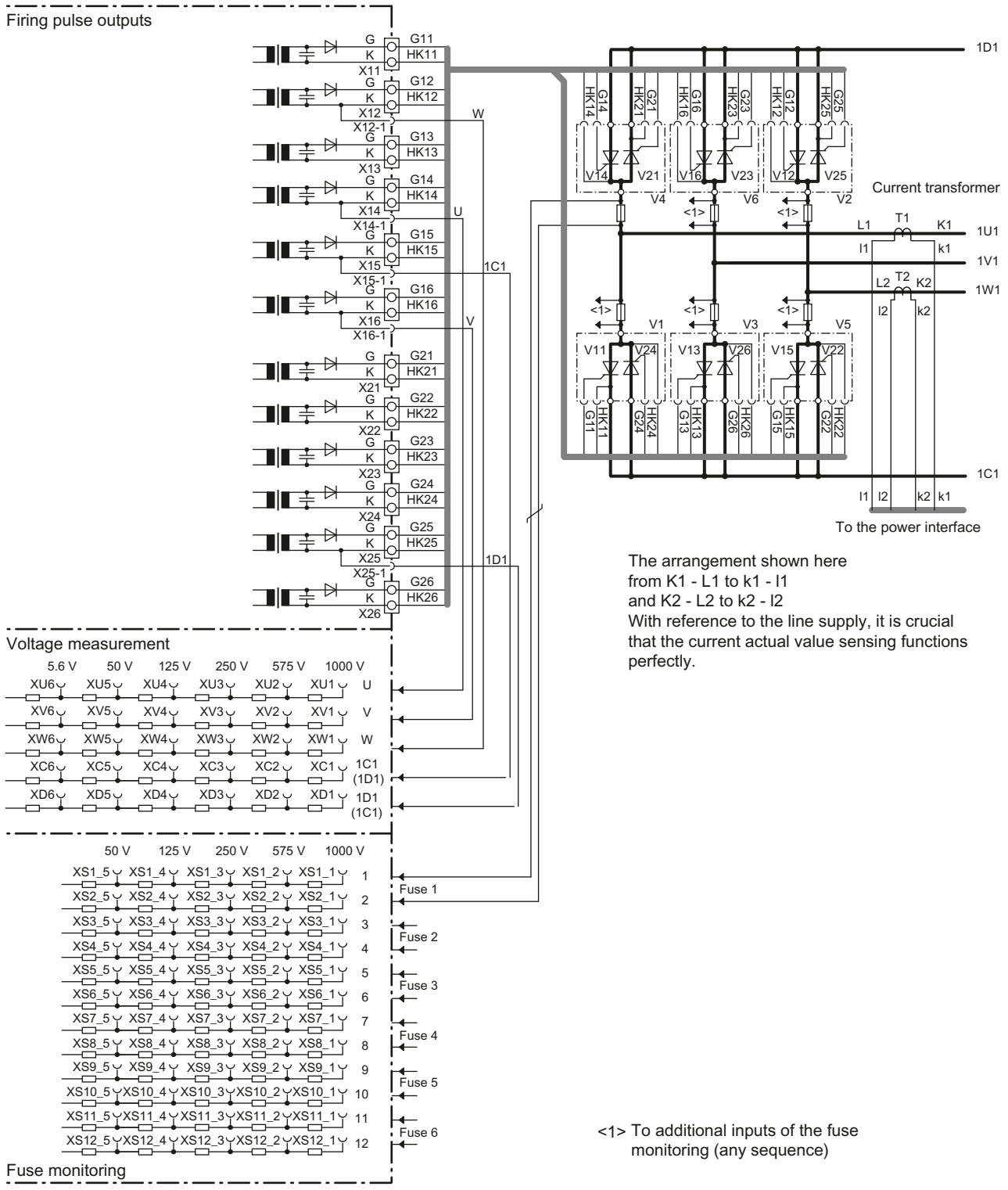

The arrangement shown here
from K1 - L1 to k1 - I1
and K2 - L2 to k2 - I2
With reference to the line supply, it is crucial that the current actual value sensing functions perfectly.

<1> To additional inputs of the fuse monitoring (any sequence)

Figure 6-15 Connection of a 4-quadrant power unit (1)

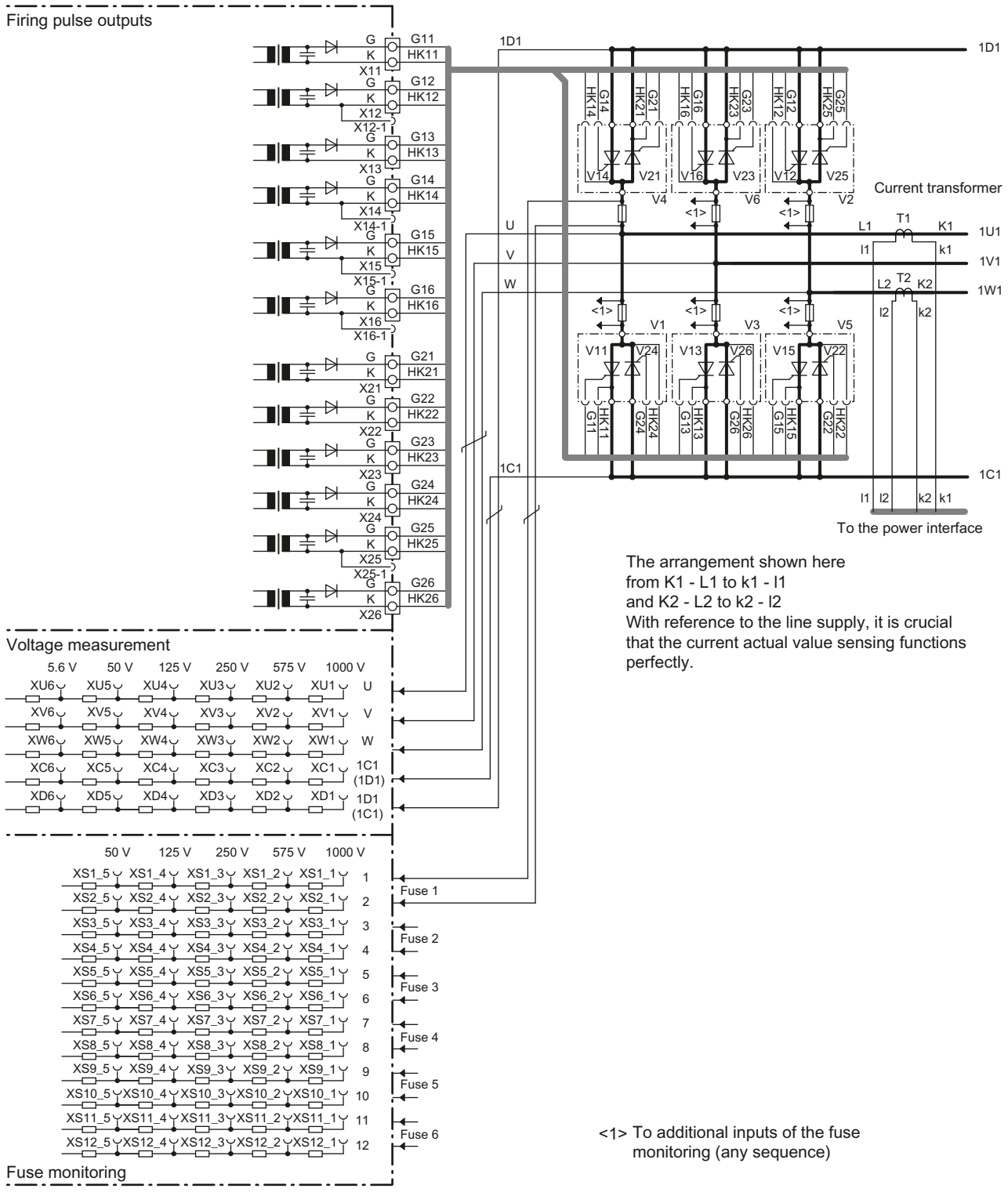

Figure 6-16 Connection of a 4-quadrant power unit (2)

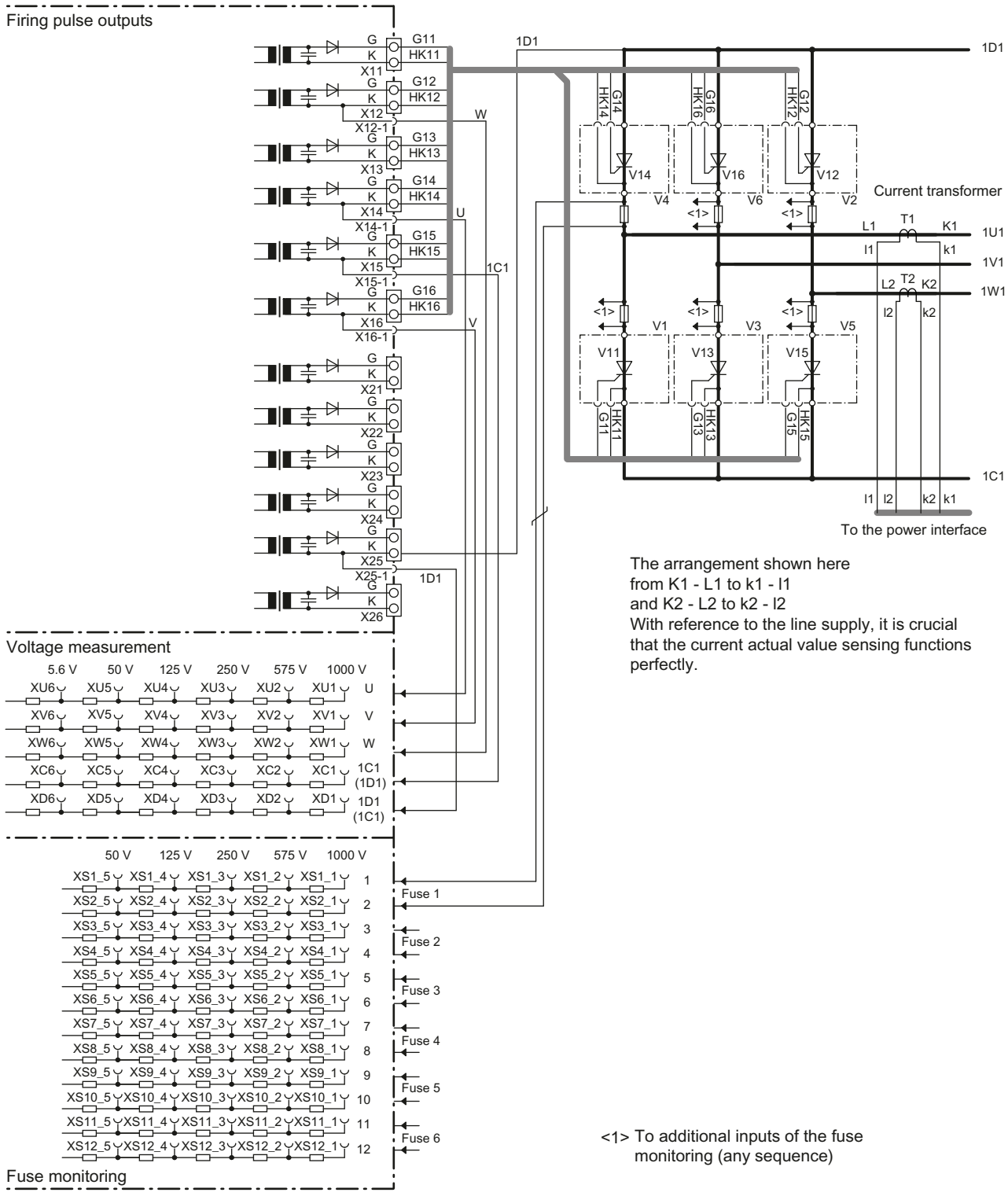

Figure 6-17 Connection of a 2-quadrant power unit (1)

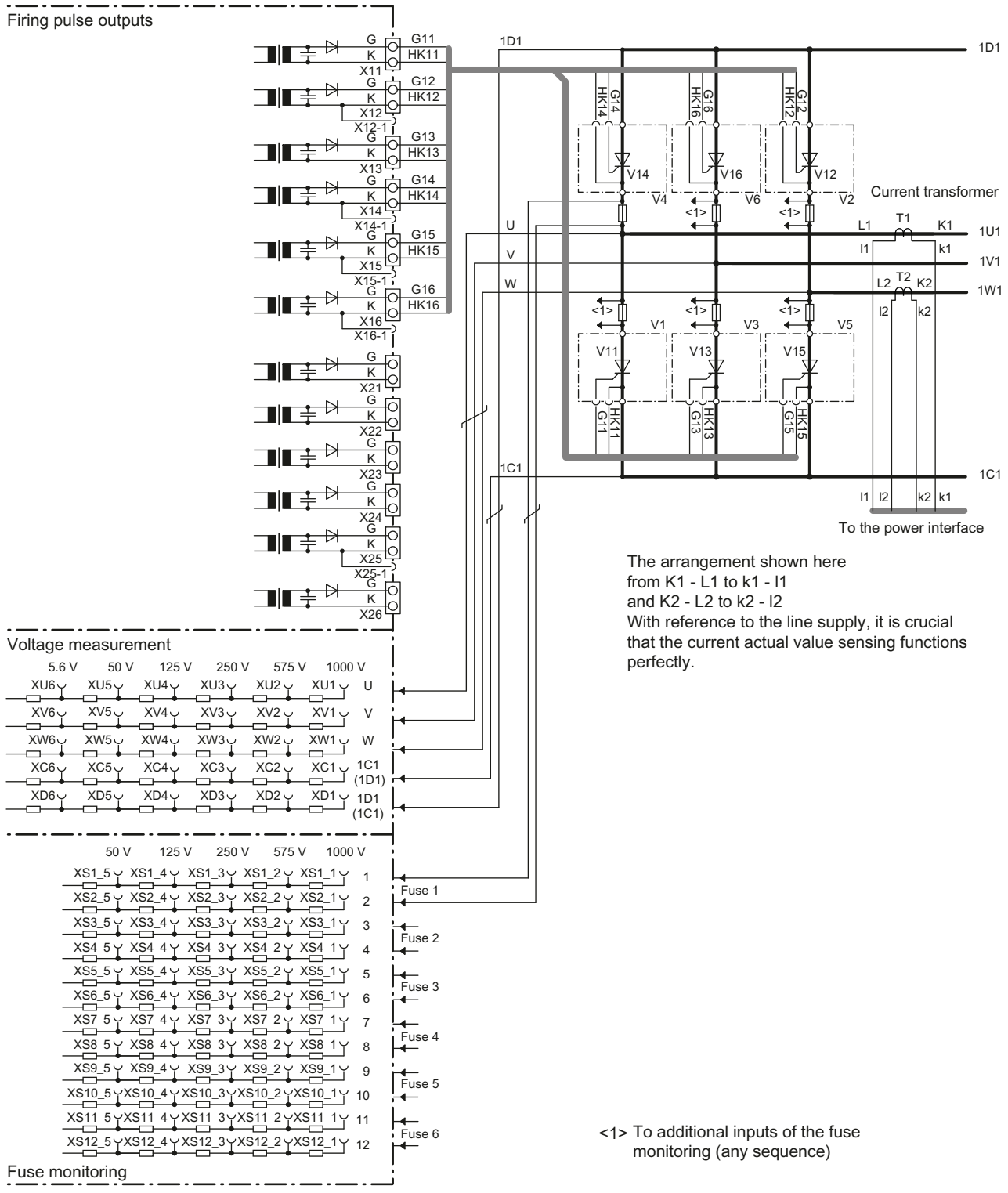

Figure 6-18 Connection of a 2-quadrant power unit (2)

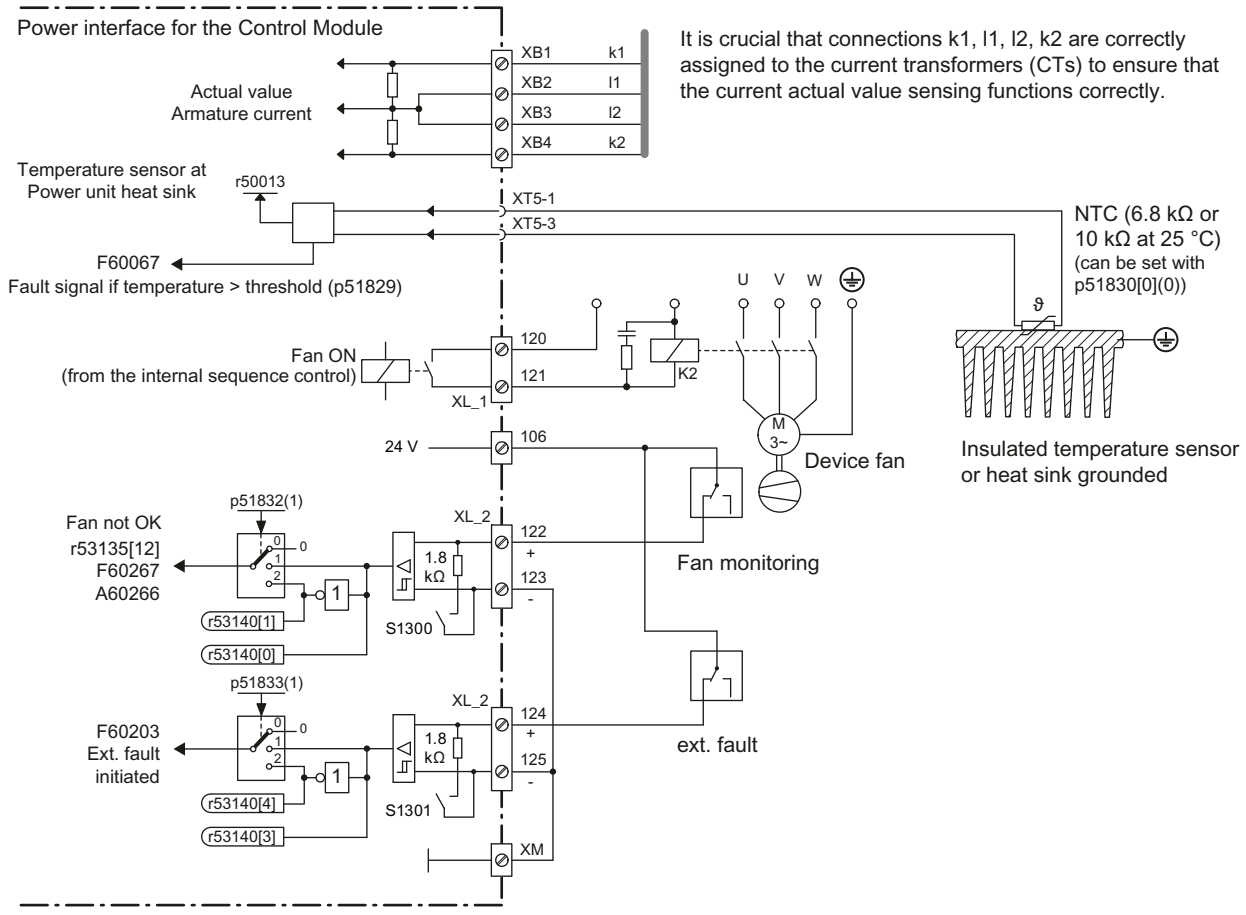

Figure 6-19 Connections to the power interface

⚠ WARNING

Electric shock in the event of voltage flashovers at the temperature sensor

Voltage flashovers in the signal electronics can occur in motors without safe electrical separation of the temperature sensors.

- Use temperature sensors that comply with the specifications relating to protective separation.

6.5 Division options

The SINAMICS DCM Control Module consists of two plates.

Modules in the front plate:

- Power interface for the Control Module
- Control Unit (CUD)
- BOP20 Operator Panel

- Second CUD (optional)
- Communication Board(s) CBE20 (optional)

Modules in the rear plate:

- Fuse monitoring
- Voltage measurement
- Firing pulse transformer module

The two plates can be mounted at a distance from each other in the system, if required.

The firing pulse transformer module can be physically divided. This means parts of it can be mounted outside the device itself in the area around the power unit.

Some examples are shown below:

Note

Restriction regarding disassembly in conjunction with functional safety

If the SINAMICS DCM Control Module is integrated in a functional safety application, the ability of the Control Module to be disassembled is restricted, see also Chapter "Functional safety (Page 671)".

- It is **not** permissible that the firing pulse transformer module or control is modified in any way.
- It is permissible to mount both plates of the Control Module separately.
- The fuse monitoring and the voltage sensing may be removed and mounted outside the device.

Note

The SINAMICS DCM Control Module is supplied with front and rear plates mounted one on top of the other. The correct cables (connectors X21A, X22A, XS20, XS21, and X102) for this mounting type are already in place.

Refer to Chapter "Ordering information for options and accessories (Page 32)" for cable ordering information if plates are being mounted in accordance with the examples below.

Note

Firing pulse cables (X11...X16, X21...X26)

The firing pulse cables should not be shielded.

If shielding is required, the shield is not connected to ground, but is connected to the auxiliary cathode of the particular thyristor. This shield must be adequately insulated with respect to its environment as it is at the full line supply voltage including the hole storage effect peaks.

Example 1: Rear plate and front plate mounted one on top of the other or at a distance from each other, firing pulse transformer module not divided

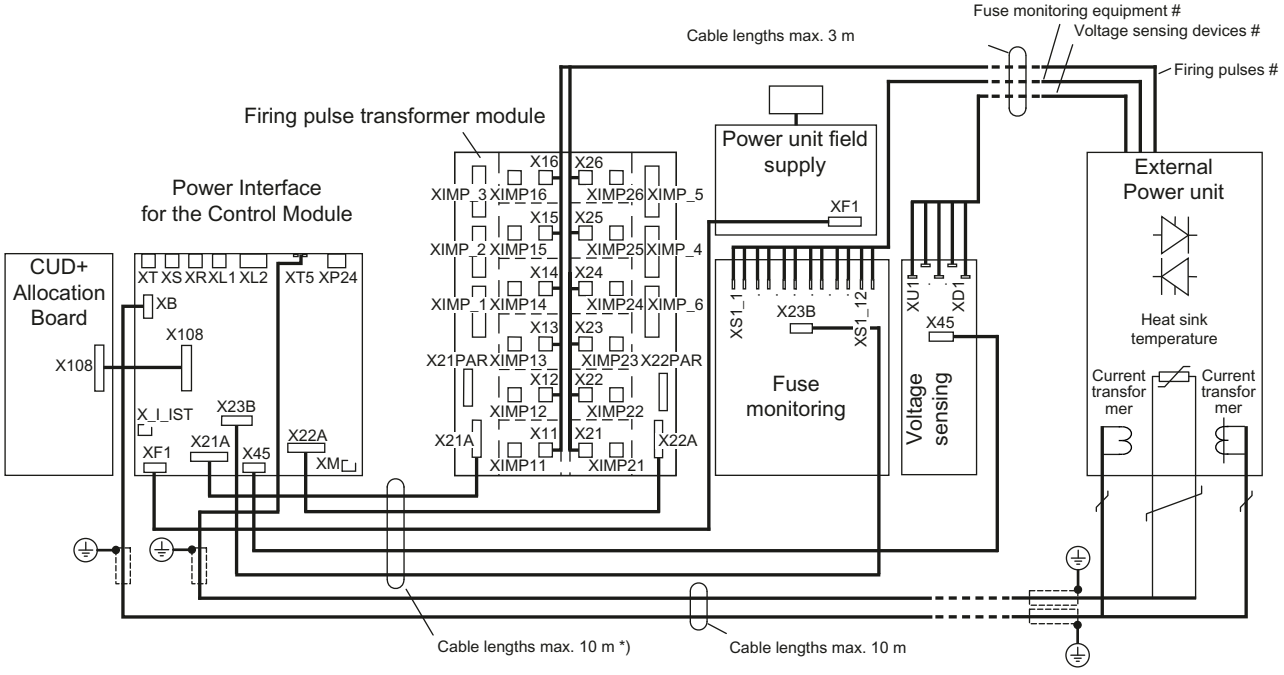

\# Short-circuit proof cable installation

Figure 6-20 Division options - Example 1

Table 6-2 Cable

Connection (Connectors/Terminals)	Cable	Length max.	Notes
X21A (torque direction 1)	Ribbon cable, 26-pin	10 m	Shield if >1 m.
X22A (torque direction 2)	Ribbon cable, 26-pin	10 m	Shield if >1 m.
X23B (fuse monitoring equipment)	Ribbon cable, 10-pin	10 m	Shield if >1 m.
X45 (voltage measurement equipment)	CAT5 cable, 8-pin	15 m	Do not roll up the cable Connect the cable shield at both ends of the cable Provide the cable with insertion loss elements ("snap-on ferrites") Type: Würth Elektronik article no.: 742 711 32 or comparable
XF1 (field)	Ribbon cable, 20-pin	10 m	Shield if >1 m.
Current transformer (XB1)	Single wires (stranded wires), twisted-pair	10 m	Shield if >2 m.
Heat sink temperature (XT5, XT6)	Single wires (stranded wires), twisted	10 m	Shield if >2 m.
Firing pulses (X11 ... X16, X21 ... X26)	Single wires (short-circuit proof routing), twisted-pair	3 m	Do not shield!

Connection (Connectors/Terminals)	Cable	Length max.	Notes
Fuse monitoring equipment (XS1_1 ... XS1_12 etc.)	Single wires (short-circuit proof routing), installed in pairs (for each fuse being monitored)	10 m	-
Voltage sensing devices (XU1, XV1, XW1, XC1, XD1 etc.)	Single wires (short-circuit proof routing), U-V-W twisted, C-D twisted	3 m	see also Chapter "Connecting the external power unit (Page 90)"

Example 2: Rear plate and front plate mounted one on top of the other or at a distance from each other, firing pulse transformer module divided, firing pulse transformers mounted on the power unit

For mechanical modifications, see Chapter "Installation (Page 47)".

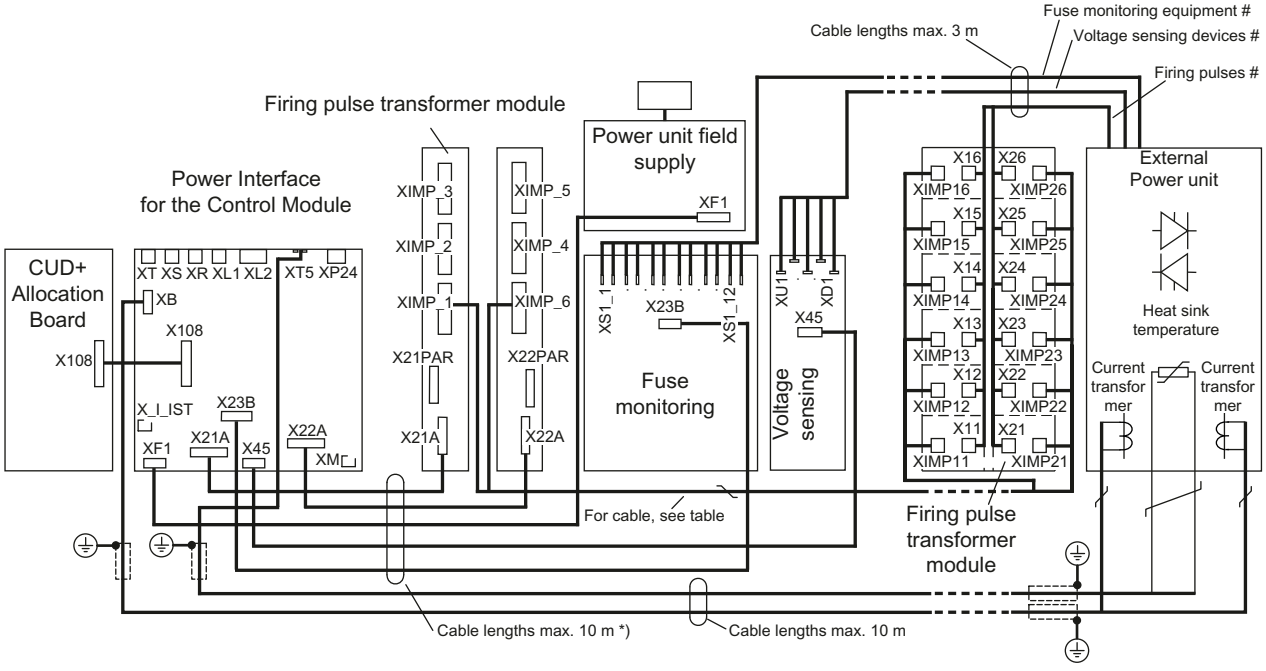

\# Short-circuit proof cable installation

Figure 6-21 Division options - Example 2

Table 6-3 Cable

Connection (Connectors/Terminals)	Cable	Length max.	Notes
X21A (torque direction 1)	Ribbon cable, 26-pin	10 m	Shield if >1 m.
X22A (torque direction 2)	Ribbon cable, 26-pin	10 m	Shield if >1 m.
X23B (fuse monitoring equipment)	Ribbon cable, 10-pin	10 m	Shield if >1 m.

Connection (Connectors/Terminals)	**Cable**	**Length max.**	**Notes**
X45 (voltage measurement equipment)	CAT5 cable, 8-pin	15 m	Do not roll up the cable Connect the cable shield at both ends of the cable Provide the cable with insertion loss elements ("snap-on ferrites") Type: Würth Elektronik article no.: 742 711 32 or comparable
XF1 (field)	Ribbon cable, 20-pin	10 m	Shield if >1 m.
Current transformer (XB1)	Single wires (stranded wires), twisted-pair	10 m	Shield if >2 m.
Heat sink temperature (XT5, XT6)	Single wires (stranded wires), twisted	10 m	Shield if >2 m.
Firing pulse transformer control (XIMP_1 - XIMP11...16) (XIMP_6 - XIMP21...26)	2 x LiyCY 8 x 2 x 0.5 (or 1) mm^2	10 m	Connect both ends of the shield.
	Or		
	Single wires (stranded wires), twisted-pair	3 m	Shield if >1 m.
Firing pulses (X11 ... X16, X21 ... X26)	Single wires (short-circuit proof routing), twisted-pair	3 m	Do not shield!
Fuse monitoring equipment (XS1_1 ... XS1_12 etc.)	Single wires (short-circuit proof routing), installed in pairs (for each fuse being monitored)	10 m	-
Voltage sensing devices (XU1, XV1, XW1, XC1, XD1 etc.)	Single wires (short-circuit proof routing), U-V-W twisted, C-D twisted	3 m	see also Chapter "Connecting the external power unit (Page 90)"

Example 3: Rear plate and front plate mounted one on top of the other or at a distance from each other, firing pulse transformer module divided, firing pulse transformers, voltage

measurement equipment and fuse monitoring equipment mounted on the power unit, field supply remains in the plate.

For mechanical modifications, see Chapter "Installation (Page 47)".

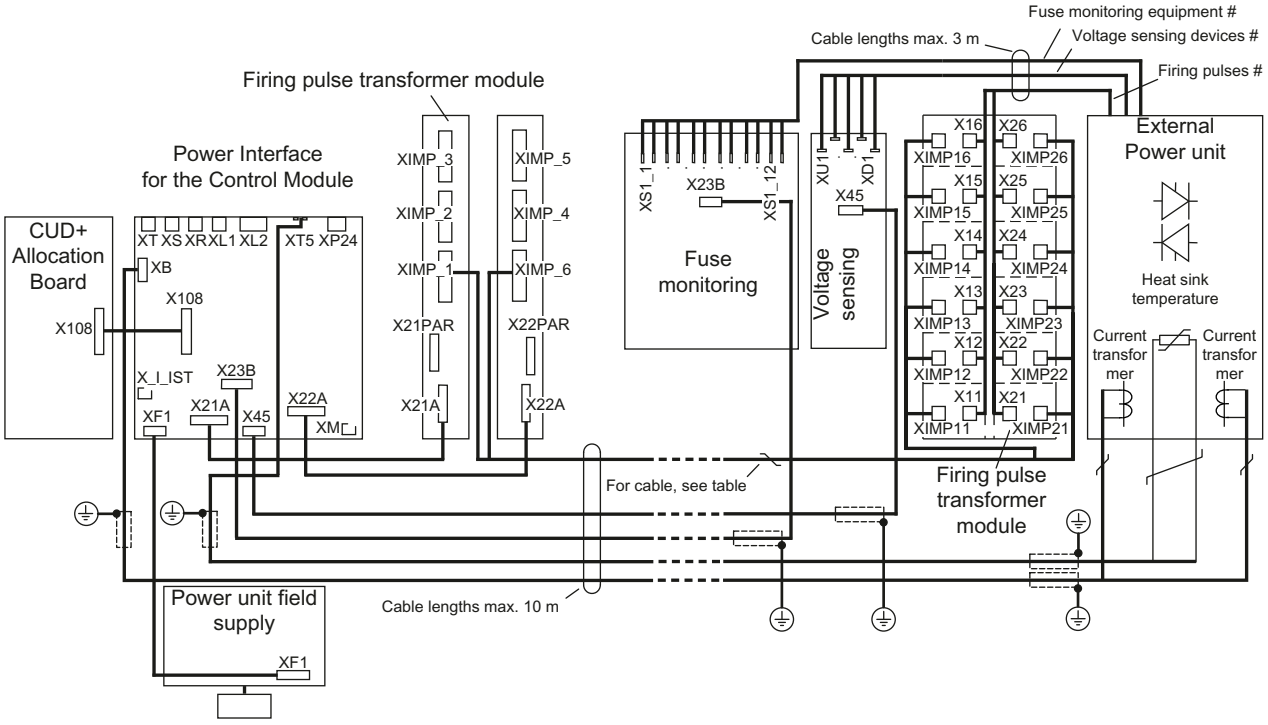

\# Short-circuit proof cable installation

Figure 6-22 Division options - Example 3

Table 6-4 Cable

Connection (Connectors/Terminals)	**Cable**	**Length max.**	**Notes**
X21A (torque direction 1)	Ribbon cable, 26-pin	10 m	Shield if >1 m.
X22A (torque direction 2)	Ribbon cable, 26-pin	10 m	Shield if >1 m.
X23B (fuse monitoring equipment)	Ribbon cable, 10-pin	10 m	Shield if >1 m.
X45 (voltage measurement equipment)	CAT5 cable, 8-pin	15 m	Do not roll up the cable Connect the cable shield at both ends of the cable Provide the cable with insertion loss elements ("snap-on ferrites") Type: Würth Elektronik article no.: 742 711 32 or comparable
XF1 (field)	Ribbon cable, 20-pin	10 m	Shield if >1 m.
Current transformer (XB1)	Single wires (stranded wires), twisted-pair	10 m	Shield if >2 m.
Heat sink temperature (XT5, XT6)	Single wires (stranded wires), twisted	10 m	Shield if >2 m.

Connection (Connectors/Terminals)	**Cable**	**Length max.**	**Notes**
Firing pulse transformer control (XIMP_1 - XIMP11...16) (XIMP_6 - XIMP21...26)	2 x LiyCY 8 x 2 x 0.5 (or 1) mm^2	10 m	Connect both ends of the shield.
	Or		
	Single wires (stranded wires), twisted-pair	3 m	Shield if >1 m.
Firing pulses (X11 ... X16, X21 ... X26)	Single wires (short-circuit proof routing), twisted-pair	3 m	Do not shield!
Fuse monitoring equipment (XS1_1 ... XS1_12 etc.)	Single wires (short-circuit proof routing), installed in pairs (for each fuse being monitored)	10 m	-
Voltage sensing devices (XU1, XV1, XW1, XC1, XD1 etc.)	Single wires (short-circuit proof routing), U-V-W twisted, C-D twisted	3 m	see also Chapter "Connecting the external power unit (Page 90)"

Example 4: Parallel connection of power units with a shared set of control electronics

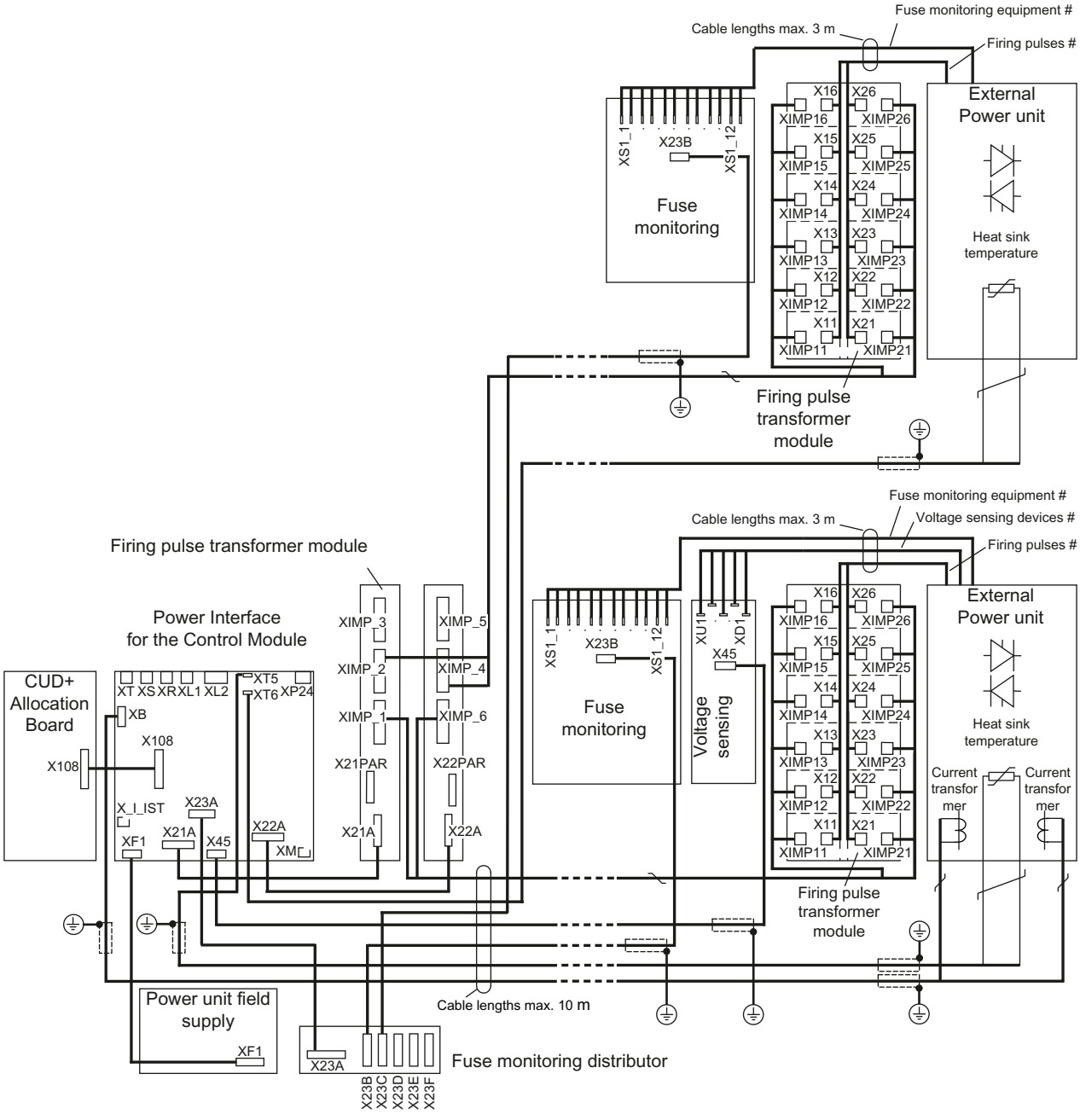

\# short-circuit-proof routing

Figure 6-23 Division options - Example 4

Notes:

- Cables:
  The corresponding information in Examples 1 to 3 of this section applies to the cable types and permissible cable lengths.
- Please refer to the Chapter "Connecting the firing pulse transformers (Page 118)" for information on parallel connection.
- Please refer to the Chapter titled "Connecting fuse monitoring equipment (Page 120)" for information on fuse monitoring equipment.
- Please also note the information contained in Chapter "Parallel connection of power units (Page 121)"

Example 5: Controlling a SITOR thyristor set 6QG12

The information on cables, cable lengths, and module division provided in Example 3 also largely applies to this example.

The firing pulse transformer module is completely divided up. The small individual boards containing the firing pulse transformers can be connected to the power unit instead of the old-style small firing pulse transformer boards. The fuse monitoring and voltage measurement equipment is mounted in the immediate vicinity of the SITOR set.

Connecting current transformers

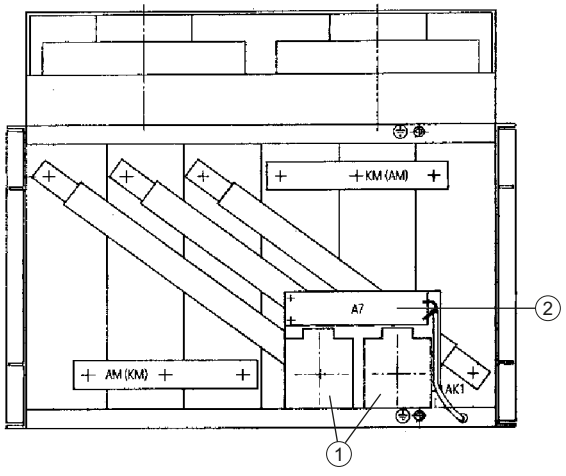

Rear view

① Current transformers
② Remove the connection between the current transformers and module A7 and connect the current transformer cables directly to the current transformers' screw terminals.

Circuit (B6)A(B6)C (4-quadrant drive)

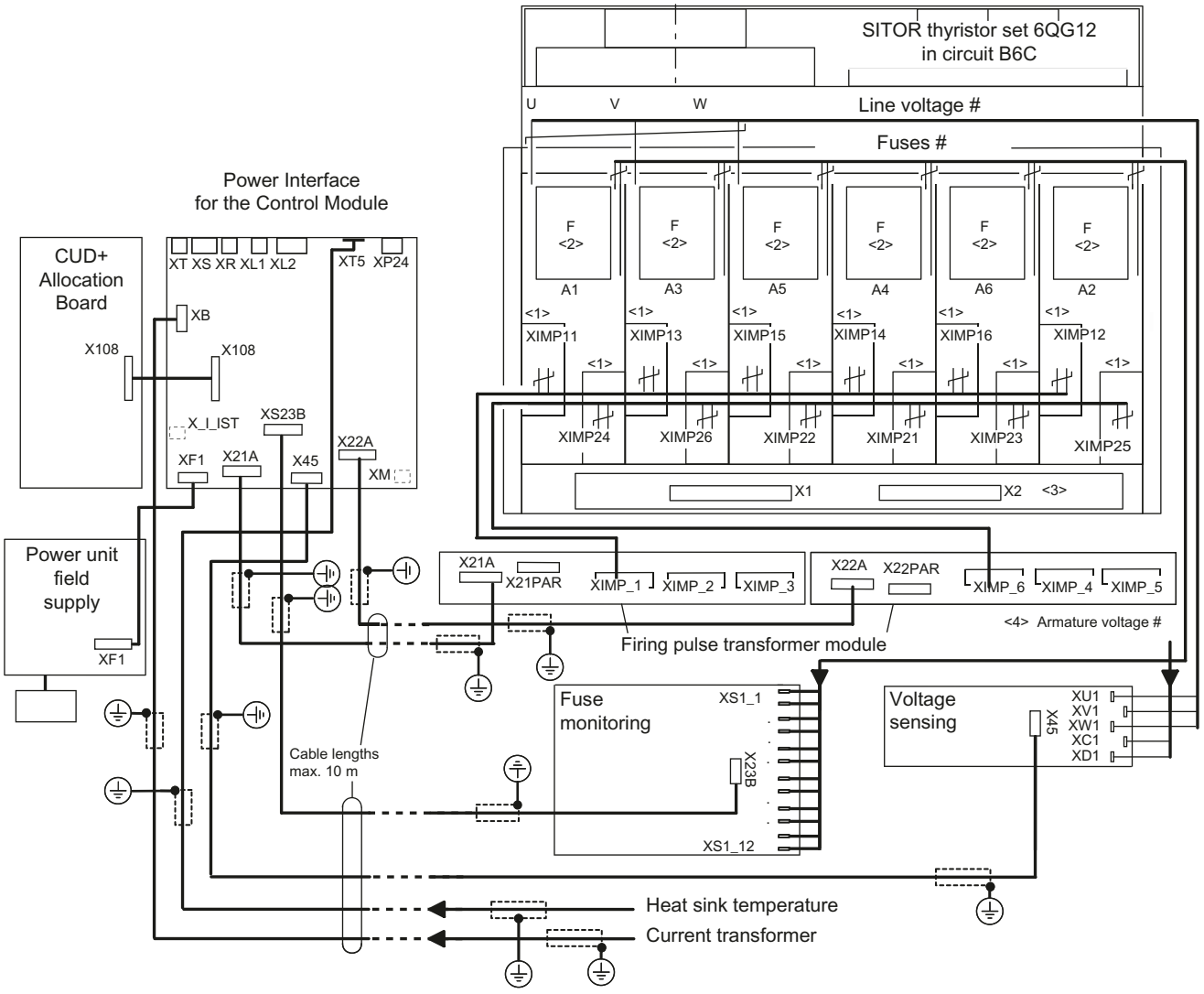

\# Short-circuit proof cable installation

<1> Firing pulse transformer module inserted into the available plastic holders (following the order of the terminal names shown in the figure).
Cables routed to the firing pulse transformers run from terminal strips XIMP_1 and XIMP_6 to XIMP11 (IMP11, P24) - XIMP26 (IMP26, P24).
Firing cables X11 (K, G) to X26 (K, G) routed to the thyristors not shown
(X11 to X16 each routed to thyristor V01 in the thyristor double block, X21 to X26 routed to thyristor V02)

<2> Connection of the fuse monitoring equipment to the Faston tabs on the fuse holders.
The equipment for measuring the line voltage can be connected to the fuses in the thyristor blocks A1 (= AK1 = U), A3 (= AK3 = V), and A5 (= AK5 = W) (see circuit diagram below).

<3> Do not connect X1, X2

<4> Measurement of armature voltage: connection of KW (AW) - C and AW (KW) - D

Figure 6-24 Circuit (B6)A(B6)C (4-quadrant drive)

For information: Circuit diagram, SITOR set (4Q) before being equipped with SINAMICS DCM Control Module

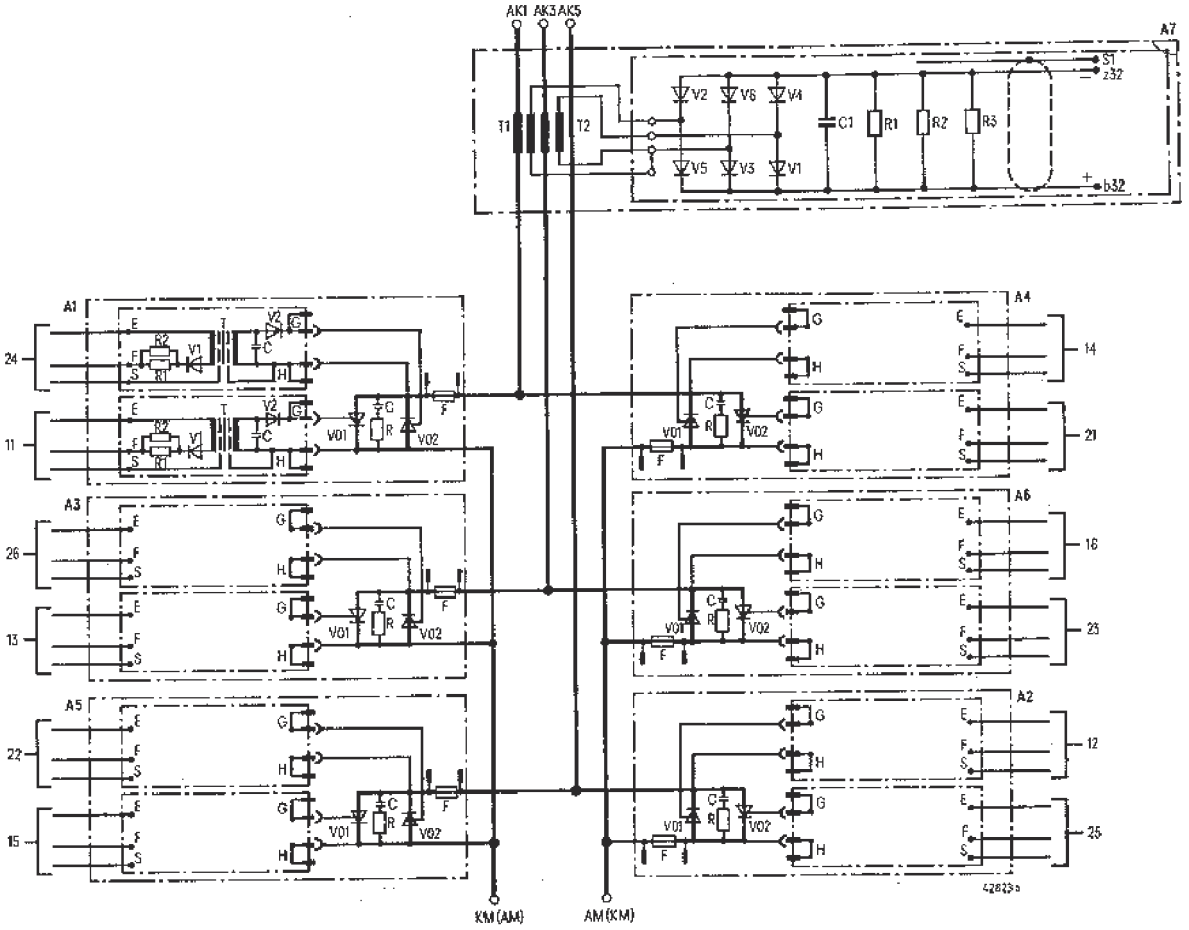

SITOR sets 6QG12 in an anti-parallel connection of two three-phase current bridge circuits [(B6)A(B6)C] with a transformer module for measuring actual current values (if SITOR sets 6QG12 are being used without a transformer module for measuring actual current values, there is no need for an A7 module)

Figure 6-25 SITOR 4Q before modification

Circuit B6C (2-quadrant drive)

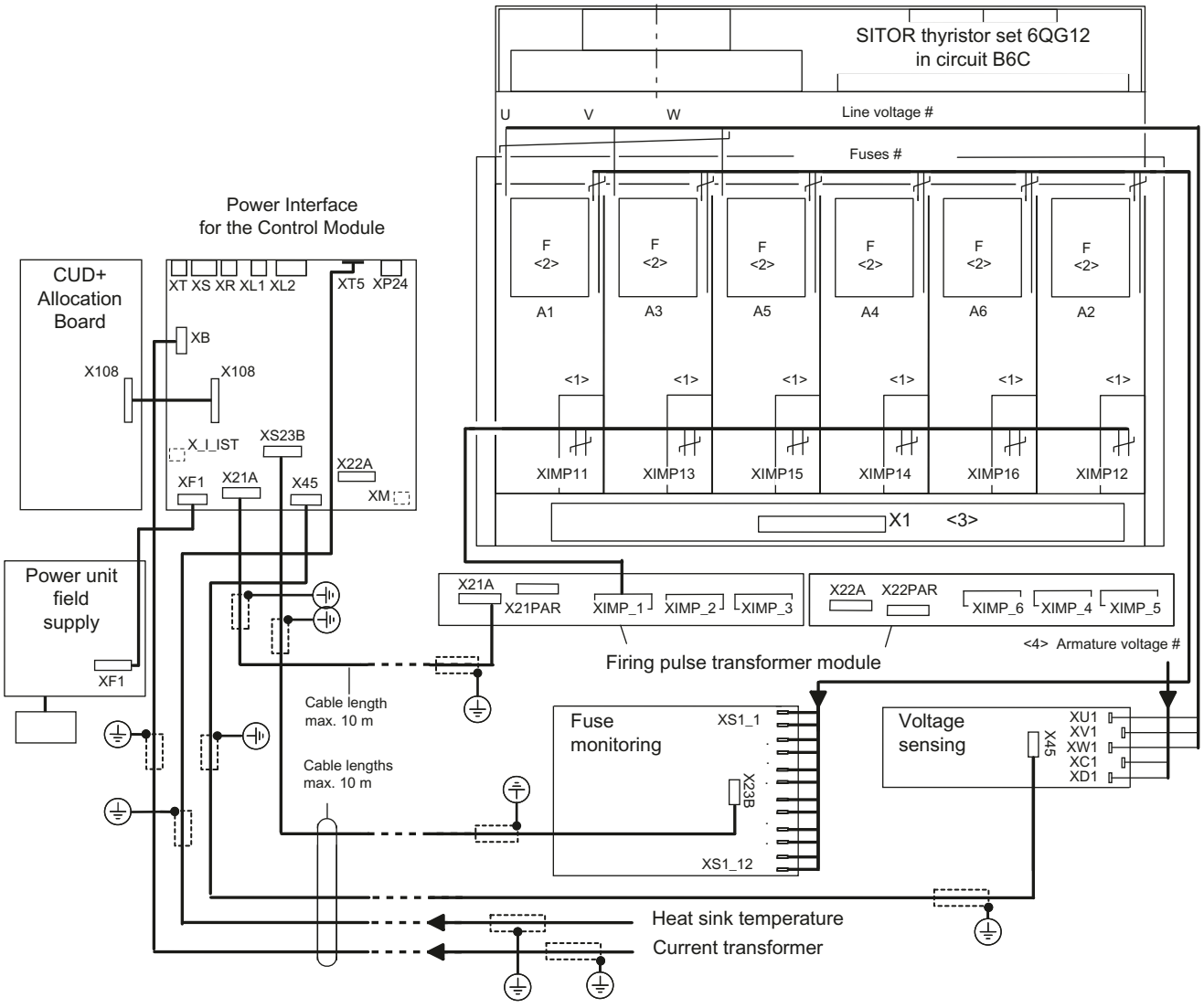

\# Short-circuit proof cable installation

<1> Firing pulse transformer module inserted into the plastic holders available (following the order of the terminal names shown in the figure).
Cables routed to the firing pulse transformers run from terminal strips XIMP_1 to XIMP11 (IMP11, P24) - XIMP16 (IMP16, P24).
Firing cables X11 (K, G) to X16 (K, G) routed to the thyristors not shown
(X11 to X16 each routed to thyristor V01 in the thyristor double block, X21 to X26 routed to thyristor V02)

<2> Connection of the fuse monitoring equipment to the Faston tabs on the fuse holders.
The equipment for measuring the line voltage can be connected to the fuses in the thyristor blocks A1 (= AK1 = U), A3 (= AK3 = V), and A5 (= AK5 = W) (see circuit diagram below).

<3> Do not connect X1

<4> Measurement of armature voltage: Connection of KW - C and AW - D. (see the circuit diagram below for details of how to connect to Faston tabs on the thyristor blocks)

Figure 6-26 Circuit B6C (2-quadrant drive)

For information: Circuit diagram, SITOR set (2Q) before being equipped with SINAMICS DCM Control Module

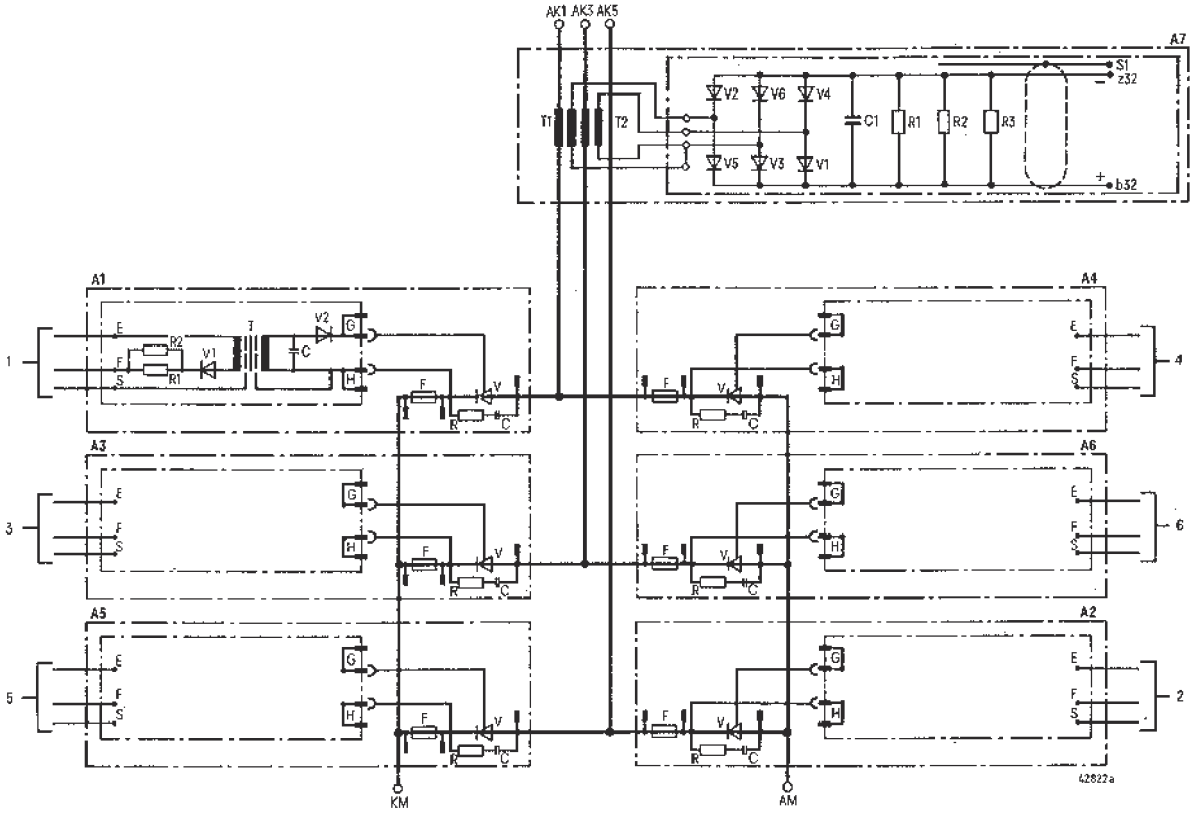

SITOR sets 6QG12 in a three-phase current bridge circuit [B6C] with a transformer module for measuring actual current values (if SITOR sets 6QG12 are being used without a transformer module for measuring actual current values, there is no need for an A7 module)

Figure 6-27 SITOR 2Q before modification

6.6 Measurement of the armature current

6.6.1 General information

Measuring circuit on the power interface for the Control Module:

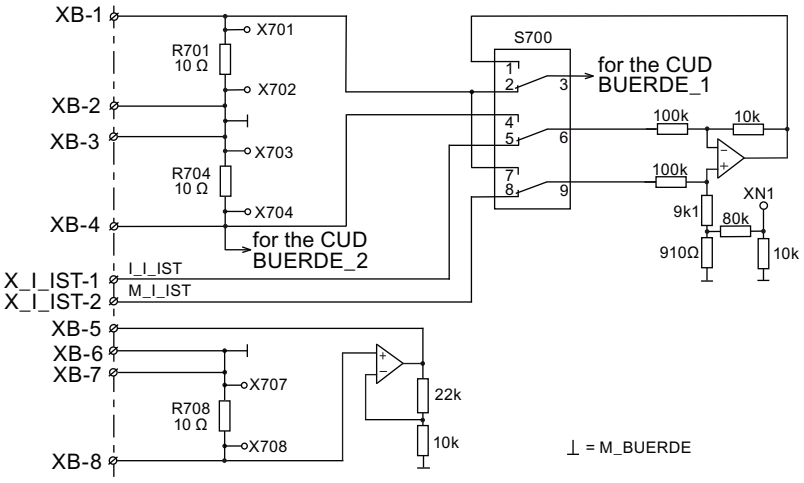

Figure 6-28 Current measurement

Arrangement on the power interface for the Control Module:

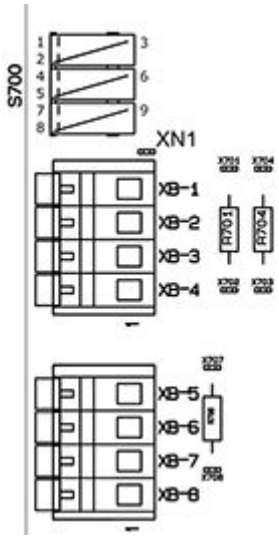

Arrangement of terminals XB

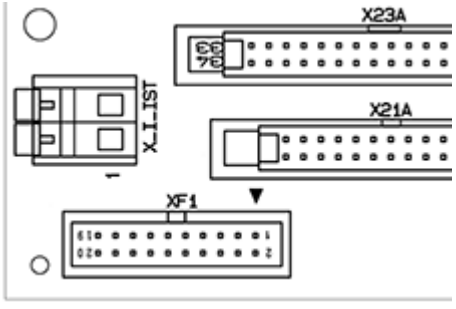

Arrangement of X_I_IST

Note

In the previous diagrams, switch S700 is shown in the state when shipped from the factory. The disconnecting links for switch S700 must be soldered into the hooks to ensure the connection is secure.

Dimensioning current transformers, load resistors

The digital-to-analog converter circuit on the CUD can process voltages of up to ±3 V (peak value). When dimensioning the current transformers and load resistors, it is important to ensure the voltage at signals BUERDE_1 and BUERDE_2 (see "Current measurement" figure) never exceeds this value, even at the highest expected overcurrent in the power unit. On delivery, actual current value measurement on the SINAMICS DCM Control Module is configured in such a way as to ensure an actual current value signal of 1 V at the rated device current. The difference amplifier in the "Current measurement" figure can also be used (with amplification of 0.1) to adjust the input voltage of existing measuring equipment with different scaling.

It is better to dimension the current transformers and load resistors in such a way as to ensure an average load voltage of no more than 1 V at the armature's rated DC current.

If an external load resistor is being used, ensure the wires between this resistor and terminals XB-1 to XB-8 are twisted and kept as short as possible. To prevent measuring errors, the external load resistor itself should be connected in accordance with the four-wire method (potential tap) and have as little inductance as possible.

With the four-wire method, the current to be measured is routed through the resistor. The resulting voltage (load voltage) is tapped at the connections at a distance specified by the manufacturer. This ensures measurements are as accurate as possible.

Only load resistors with a maximum power loss of at least 0.5 W can be soldered in at the soldering terminals parallel to the 10 Ω load resistors already installed. If 5 A current transformers are already present, 5 A/ 0.1 A matching transformers should be used. In such cases, the standard R701 and R708 load resistors can be used with 10 Ω each.

The maximum permissible current at input terminals XB1 to XB4, XB7, and XB8 is 1 A.

If two current transformers are already present in a V-circuit, these can be connected directly to terminals XB-1 to XB-4 without V-circuit in order to reduce the wait time for current reversal (higher dynamic response to torque changes). See next chapter.

Interposing current transformers may only be connected directly downstream of a current transformer and not downstream of a V-circuit!

6.6.2 Current measurement with two current transformers on the line side

(on delivery)

Configuration as shown in Chapter "Connecting the external power unit (Page 90)"

Current transformer

XB-1	k1	Current transformer T1 signal	K line side
XB-2	l1	Ground reference	L device side
XB-3	l2	Ground reference	
XB-4	k2	Current transformer T2 signal	

The current transformers must have no external connection to ground. Only terminals XB-2 and XB-3 may be used for this purpose.

S700 switch positions:

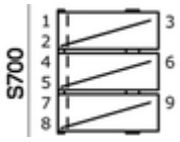

2 – 3 connected
5 – 6 connected
8 – 9 connected

The position of the S700 means that the difference amplifier on the power interface for the Control Module (see "Measuring circuit" figure) is not active. The load voltages from X3 are connected directly to the control electronics.

Load resistors

$$R_B = \frac{U_B}{\ddot{u} \times I_d}$$

R_B = Load resistor

U_B = Load voltage (= mean value over 1 current crest, not the rms value or mean value over the entire period); recommended value = 1 V

ü = Transformation ratio of the current transformer (I2/I1) (in general, ü = 1/number of turns)

I_d = Rated armature DC current

The values determined for the load resistances can be set by soldering additional resistors onto the soldering lugs parallel to R701 and R704 and, if necessary, by removing R701 and R704.

The influence of the magnetizing current can be taken into account in order to determine the load resistances accurately. If the magnetizing current is not taken into account, then a higher current equivalent to "magnetizing current x number of turns" flows through the cables than is actually displayed.

Determining the magnetizing current

The secondary current of the current transformer must flow through its ohmic resistor (at maximum operating temperature), load resistor, and any rectifier diodes connected in series. This results in a calculable voltage drop at the rated current (sinusoidal). This voltage (50 Hz sine-wave) is then applied on the secondary side and the magnetizing current measured. This value is then used to calculate R_B.

It is also important to ensure that current transformers do not experience excessive saturation in the event of an overcurrent, as the magnetizing current will increase dramatically. It is also important to take temperature rise into account when operating at permanent load.

Load resistor taking into account the magnetizing current

$$R_B = \frac{U_B}{\ddot{u} \times (I_d - \frac{I_m}{\ddot{u}})}$$

I_m = Magnetizing current

Parameter settings

p51822 = Rated armature DC current
p51823 = Load voltage at rated armature current
(on delivery = 1000.0 mV)
p51824 = 1: Current transformers in phases U and V
2: Current transformers in phases U and W (on delivery)
3: Current transformers in phases V and W
4: Current transformers externally interconnected in a V-circuit
5: Actual current value signal, bipolar (external shunt)
p51852 = 0: Internal measurement of armature actual current value
1: Measurement of armature actual current value via X177.1/2
2: Measurement of armature actual current value via X177.3/4
3: Measurement of armature actual current value via X177.5/6
4: Measurement of armature actual current value via X177.7/8

6.6.3 Current measurement via terminal block XB-1 to XB-4 with external measuring circuit

6.6.3.1 External current transformers in V-circuit with +1 V at rated armature DC current

Principle of operation of the V-circuit

Two current transformers (CTs), a rectifier bridge and an external load resistor are connected-up corresponding to the following diagram to measure the current.

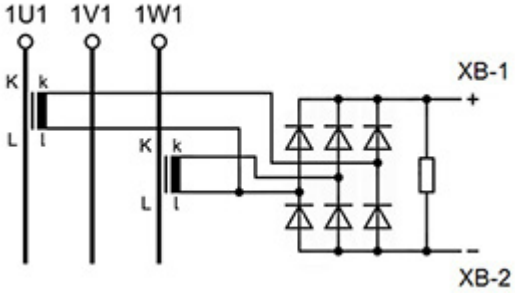

It is important that the ends with the same name (lower case l) are connected together. This is then followed by a 3-phase bridge rectifier with a load resistor. As a consequence, any current can flow through the load resistor.

Advantage of the V-circuit

Due to the threshold voltage of the diodes, the CT (current transformer) is more quickly demagnetized.

Disadvantage of the V-circuit

The demagnetization current of the CT is converted into an apparent armature current as a result of the rectifier diodes (in spite of armature current = 0). This makes it more difficult to identify a no-current interval to change the current flow direction. As a consequence, when using this circuit, a longer torque-free pause must be maintained than when directly measuring the armature current.

Connection

The output signal of the V-circuit is connected to terminals XB-1 (+) and XB-2 (-). Terminals XB-3 and XB-4 are not used.

S700 switch positions:

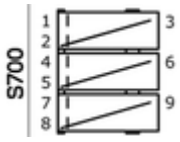

2 – 3 connected
5 – 6 connected
8 – 9 connected

Remove R701! The difference amplifier is not used.

Parameter settings

p51822 = Rated armature DC current
p51823 = Input voltage at rated armature current
p51824 = 4 (V-circuit)

Load

The load resistor for the open-delta connection should be located externally, but must not be grounded externally. Terminal XB-2 is used for grounding. R701 should be removed.

6.6.3.2 External current transformers in V-circuit with +10 V at rated armature DC current

Connection

The output signal of the V-circuit is connected to terminals XB-1 (+) and XB-2 (-), terminals XB-3 and XB-4 must be shorted.

S700 switch positions:

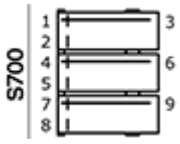

1 – 3 connected
4 – 6 connected
7 – 9 connected

Remove R701. The difference amplifier at the power interface is active. The input signal is reduced to a tenth of its value (10 V to 1 V at rated DC current).

Parameter settings

p51822 = Rated armature DC current
p51823 = Input voltage at rated armature current/10
p51824 = 4

Load

The load resistor for the open-delta connection should be located externally, but must not be grounded externally. Terminal XB-2 is used for grounding. R701 should be removed.

6.6.3.3 Differential input for +/-10 V at rated armature DC current

This connection option is intended for operation with an LEM transformer or shunt amplifier.

It should be remembered that many products are limited in terms of what they can control. Where this is the case, connection should be based on a 1 V input.

Connection

XB-1 positive (not inverted), XB-4 negative (inverted). External grounding at XB-4 is recommended. The signal has both polarities (switches pole during torque changes).

S700 switch positions:

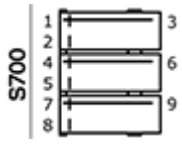

1 – 3 connected
4 – 6 connected
7 – 9 connected

Remove R701 and R704. The difference amplifier has an attenuating effect (10:1).

Parameter settings

p51822 = Rated armature DC current
p51823 = Input voltage at rated armature current/10
p51824 = 5 (bipolar)

Load

The load resistor of the LEM current transducer should be located externally and grounded with the power supply. Since shunt amplifiers generally have a ±10 V voltage output, they do not require a load.

6.6.3.4 Input for +/-1 V at rated armature DC current

This connection option is intended for operation with an LEM transformer.

Connection

XB-1 positive (non inverting), XB-2 negative (inverting). The signal has both polarities (switches pole during torque changes).

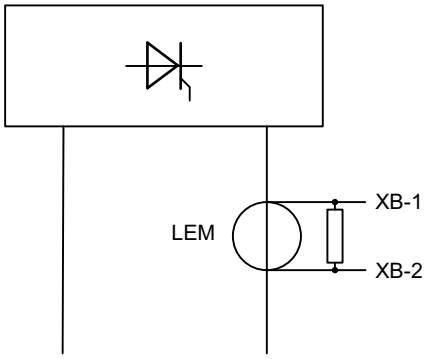

S700 switch positions:

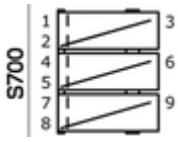

2 – 3 connected
5 – 6 connected
8 – 9 connected

Remove R701.

Parameter settings

p51822 = Rated armature DC current
p51823 = Input voltage at rated armature current
p51824 = 5 (bipolar)

Load

The load resistor should be located externally and grounded with the LEM transformer's power supply. The value should be dimensioned to produce a 1 V voltage at the rated current.

6.6.4 External current measurement via X21A or X_I_IST

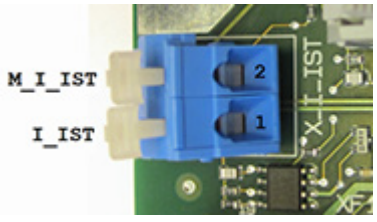

For the arrangement of the terminals at the Power Interface of the SINAMICS DCM Control Module, see also the diagram in Chapter “General information (Page 109)”.

X21A-23 and X_I_IST-1 = I_IST, negative actual current value
X21A-24 and X_I_IST-2 = M_I_IST, reference potential

S700 switch positions

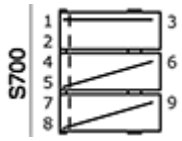

1 – 3 connected
5 – 6 connected
8 – 9 connected

The difference amplifier is active. The input signal is inverted and reduced to a tenth of its value (-10 V to 1 V at rated DC current or -30 V to 3 V at the control limit).

Parameter settings

p51822 =	Rated armature DC current
p51823 =	Input voltage at rated armature current/10
p51824 =	4 for unipolar (negative) actual current value signal 5 for bipolar actual current value signal

6.6.5 Offset correction via XN1

For SITOR sets 6QGXX with shunt current measurement and both V/f and f/V conversion, the potentiometer (R202 on module 6QM400 for SITOR thyristor set 6QG22) on the secondary side should be calibrated to exactly match the zero point of the output voltage when the device is de-energized. Please refer to Chapter 6 for 6QG22, "Improving interference immunity and drift problems of the analog actual current value for SITOR electronics". If this potentiometer is not set correctly, not only will an offset error occur, but current measurement will be subject to a scaling error. In order to make additional adjustments to the offset for a precise zero current message, connector XN1 on the power interface for the Control Module must be connected to an analog output (±10 V) on the Control Module (CUD). The offset can be minimized by assigning output voltage parameters manually. This will not, however, rectify the scaling error referred to above.

6.6.6 Information on the differential input, control limits, and grounding

If the difference amplifier is used with an amplification of 0.1, a differential input voltage of up to ±30 V can be processed as a single-ended output voltage (up to ±3 V). The value ±3 V represents the control limits of the analog digital converter on the CUD.

If the output signal from external armature current measurement is scaled to ±10 V at rated current, it will not be possible to measure overcurrent. For example, if the output signal from armature current measurement is scaled to ±5 V at rated current, a current of 2 × I_{RATED} can be measured.

It is vital for users of the SINAMICS DCM Control Module to realize that they need to check whether the method used for current measurement is really able to map the desired overcurrents and the expected peak values within the tolerance required. It is important to check the current measurement circuit to ensure that current mapping remains linear right

through to the desired overcurrent capacity. If this is not the case, the capping of the actual value will result in current overshooting and, ultimately, in blown fuses.

The most common risk is overloading of the last operational amplifier in the measuring circuit. This problem can be avoided by scaling external current measurement to a sufficiently low value. For example, R642 needs to be shorted in 6QG22. Similarly, R71 needs to be jumpered with an additional 100 kΩ in 6QG35. This ensures there is controllability at anything up to 2 x rated current (±10 V).

The SINAMICS DCM Control Module is able to process load signals up to a peak value of ±3 V (= 3 × rated current). This means processing is possible up to a peak value of ±30 V when the differential input is being used.

If the V-circuit is being used with an external load resistor and there is no downstream amplifier, it is advisable to dimension the load resistor for 1 V at rated current. The R701 or R704 internal 10 Ω resistor should be removed to minimize the influence of the supply line and terminal resistance. Please take care when performing calculations if the resistor is still in place! In this case, the integrated load resistor of 10 Ω must be taken into consideration when calculating the external load resistor. Existing load resistors for 10 V at rated current can have their previous value and power loss reduced to a tenth. Terminals XB-1 and XB-2 are used for the connection, with XB-2 acting as the ground connection. EMC requirements mean there should be no other connection between the V-circuit and ground.

If a V-circuit for 10 V at rated current is to be connected without any changes, either terminals XB-1 and XB-4 (with the difference amplifier at 0.1) or terminals X_I_IST must be used. In such cases, one end of the load resistor should be grounded for EMC reasons.

If an external measuring circuit (LEM transformer) is connected, its electronic ground should be grounded for EMC reasons.

6.7 Connecting the firing pulse transformers

6.7.1 General information

The twelve firing pulse drivers for the firing pulse transformers are located on the "Power interface for the Control Module" module. The firing pulses for the first torque direction can be accessed via connector X21A and those for the second torque direction via connector X22A. Each firing pulse driver has an open drain output with a parallel diode downstream of the electronics ground. A further diode discharges shutdown overvoltages internally downstream of P44 (+44 V). The twelve firing pulse transformers (containing 33 Ω series resistors) are located on the "Firing pulse transformer module". Each is connected between P24 and the firing-circuit cable. Each of the twelve firing pulse drivers can control up to three firing pulse transformers (containing 33 Ω series resistors) in parallel. There is no short-circuit protection! The user is responsible for ensuring the outputs are not overloaded. The maximum power pulse current at each of these outputs is 2.5 A. The circuit as a whole is dimensioned for long pulses.

Note

Restriction regarding disassembly in conjunction with functional safety

If the SINAMICS DCM Control Module is integrated in a functional safety application, it is **not** permissible that the firing pulse transformer module or its control is modified in any way, see also Chapter "Functional safety (Page 671)".

6.7.2 Normal use (individual)

Connectors X21A and X22A are connected with the connectors of the same name on the "Firing pulse transformer module" via two 26-pin ribbon cables. The firing pulse transformers on the module with the same name are then connected. It is only necessary to use the ribbon cable for X21A for operation with just one current direction. If the "Firing pulse transformer module" has been divided (broken up), each firing pulse transformer must be connected to the terminal strip via two twisted cables.

6.7.3 Parallel connection of firing pulses

Up to three firing pulse transformers (containing 33 Ω series resistors) can be connected in parallel. This involves connecting additional "Firing pulse transformer modules" (firing pulse transformers) (spare part article number 6RY1703-0CM01) via ribbon cables or using two twisted cables to wire each individual firing pulse transformer in parallel with the terminal with the same name.

- Two or three firing pulse transformers can be connected in parallel to increase the firing current of the thyristors. This involves connecting the secondary sides of the firing pulse transformers in parallel for each firing pulse. The firing current actually achieved should be checked with a current probe and an oscilloscope.
- For operation with just one current direction (torque direction), the second half of the "Firing pulse transformer module" can be used for connecting a power unit in parallel or increasing the firing current. This involves connecting connector X21PAR on the "Firing pulse transformer module" with connector X22PAR via a 26-pin ribbon cable. Where this is the case, numbers X21 to X26 on the firing pulse transformers are no longer really applicable.

NOTICE
Only connect a maximum of three firing pulse transformers to any one firing pulse output!
There is a risk of the firing drivers on the "Power interface for the Control Module" module being damaged due to overload.
The power interface for the Control Module is protected by F400 fuses (1 A, time-lag).

6.7.4 External amplification of firing pulses

No more than three power units can be connected in parallel unless external firing pulse amplifiers with their own 24 V supply are connected. The maximum possible load of the internal firing pulse drivers (open drain) is 2.5 A per pulse.

The associated cables for the electronic ground are also brought out at connectors X21A and X22A.

The P24 cables of connectors X21A and X22A must not be subjected to loads greater than 1 A (this is not normally connected either). The external firing pulse amplifiers must be provided with 24 V (22 V to 30 V) via their own power supply. The supply lines for the external firing pulse amplifiers must be sufficiently interference-proof to prevent thyristors misfiring under the prevailing conditions.

Notes

- External firing pulse amplifiers usually have integrated pull-up resistors at their inputs. If this is not the case or interference immunity needs to be increased, additional pull up resistors can be connected. However, the power pulse current must not exceed 1 A for each output.
- Where several firing pulse amplifiers with their own power supply are connected in parallel on the input side, the inputs will need to be decoupled by isolation diodes.

Note

Restriction in conjunction with functional safety

In conjunction with the use of functional safety, it is **not** permissible that external firing pulse amplifiers are used.

6.8 Connecting voltage measurement equipment

The following potentials from the power unit need to be connected to the "Voltage measurement" module:

- Line supply voltage 1U1, 1V1, and 1W1
- Output voltage 1C1 and 1D1

The mounting tabs are arranged in groups for the different line voltage ranges.

Table 6-5 Connecting voltage measurement equipment, parameter settings

Rated line voltage	Plug in at	Parameter [1]
< 6 V	5.6 V	p51821 = 6
6 V - 50 V	50 V	p51821 = 50
51 V - 125 V	125 V	p51821 = 125
126 V - 250 V	250 V	p51821 = 250
251 V - 575 V	575 V	p51821 = 575
576 V - 1000 V	1000 V	p51821 = 1,000
[1] Index [0] for line voltage, index [1] for armature voltage		

Other parameters:

p50078[0] Actual rated input voltage, armature

p51820 Suitable rated supply voltage (rms value) for the power unit (thyristors' proof voltage)

The voltage level selected must be the same on the printed circuit board and in the firmware or the voltages measured will be highly inaccurate.

Voltage measurement equipment does not generate any ground leakage current.

6.9 Connecting fuse monitoring equipment

One or more fuse monitoring units can be used to monitor the fuses of one or more power units.

Fuse monitoring equipment does not generate any ground leakage current.

Just the same as for the voltage sensing, the cables must be inserted at the blade terminals for the particular line voltage range. Two adjacent blade terminals form a monitoring function.

Using the fuse monitoring unit, up to six individual fuses can be monitored, isolated from one another – or twelve fuses, if there are two for each phase. The module is connected at the Power Interface via X23B.

Fuse monitoring equipment connected in parallel

Up to five fuse monitoring units can be connected in parallel to monitor additional fuses. In this way, up to 30 individual fuses can be monitored or 60 fuses if there are two for each phase.

The fuse monitoring units are connected through the fuse monitoring distributor available as an accessory.

All fuse monitoring units used are connected at the fuse monitoring distributor (connectors X23B to X23F). The fuse monitoring distributor is connected to the power interface for the Control Module via the ribbon cable provided (connector X23A).

The individual fuse monitoring modules can be activated by entering a "1" at p51831[0...4].

Note

In Chapter "Division options (Page 96)", the connection of the fuse monitoring unit to the power interface via X23B can be seen in the circuit diagrams for examples 1 to 3.
Example 4 shows the use of the fuse monitoring distributor for connecting two fuse monitoring units to a power interface.

Ordering modules

When delivered, the SINAMICS DCM Control Module contains a fuse monitoring unit.

Additional fuse monitoring units as well as the fuse monitoring distributor module are available as accessories.

See Chapter "Ordering information for options and accessories (Page 32)" for ordering data.

6.10 Parallel connection of power units

Current splitting / symmetry

It is important to ensure the current is split correctly when connecting power units in parallel. Even distribution must be ensured to prevent power unit overloads. Appropriate derating measures should be implemented where necessary. In view of this, it is absolutely essential that all parallel firing pulse transformers/firing pulse amplifiers are of the same type and design. The split of current across the power units connected in parallel should be checked during commissioning and corrected, where necessary, by harmonizing source impedances (line reactors, supply lines, and transformers). If unexpected problems are encountered during this process, check whether the firing pulses at the thyristors are occurring simultaneously. The execution times for the firing pulses must not differ by more than 200 ns. It is recommended that the firing currents of those thyristors that are to fired simultaneously in a parallel connection, should be compared on an oscilloscope with two

small current probes.
"Simulation mode" can be used for this purpose. It can be activated individually for each thyristor with parameter p51840. With electrical connections, the power unit should be safely disconnected to prevent accidents.

Comments on voltage measurement/Synchronization

The best method is to connect voltage measurement equipment 1U1, 1V1, and 1W1 at the branching points of the line supply. The connection of motor voltages 1C1 and 1D1 is relatively unimportant.

Comments on fuse monitoring

If possible, all the fuses of the devices connected in parallel should be monitored. It is particularly important to monitor the fuses at branches not measured by a current transformer. The SINAMICS DCM Control Module is unable to measure whether the current has been split evenly at these points.

Note

The currents (current splits) measured by the SINAMICS DCM Control Module itself are wholly dependent on the values determined by the current transformers. The device itself is not able to measure current splitting in the phase that runs through the current transformers (mainly 1V1).

Where only one set of SINAMICS DCM control electronics is being used, with firing pulses connected in parallel accordingly, it is not easy to determine how the current is split between the power units. One method is to measure the current at one device and work out the other currents, and thereby the total current, on the basis of the known current split. The other method involves using separate control electronics for each power unit capable of determining the allocated direct current. These currents can then be added together and the resulting values used elsewhere.

⚠ WARNING

Failure to observe general safety instructions and residual risks

If the general safety instructions and remaining risks are not observed, accidents can occur involving severe injuries or death.

- Observe the general safety instructions.
- When assessing the risk, take into account remaining risks.

6.11 Field supply

Power unit field supply

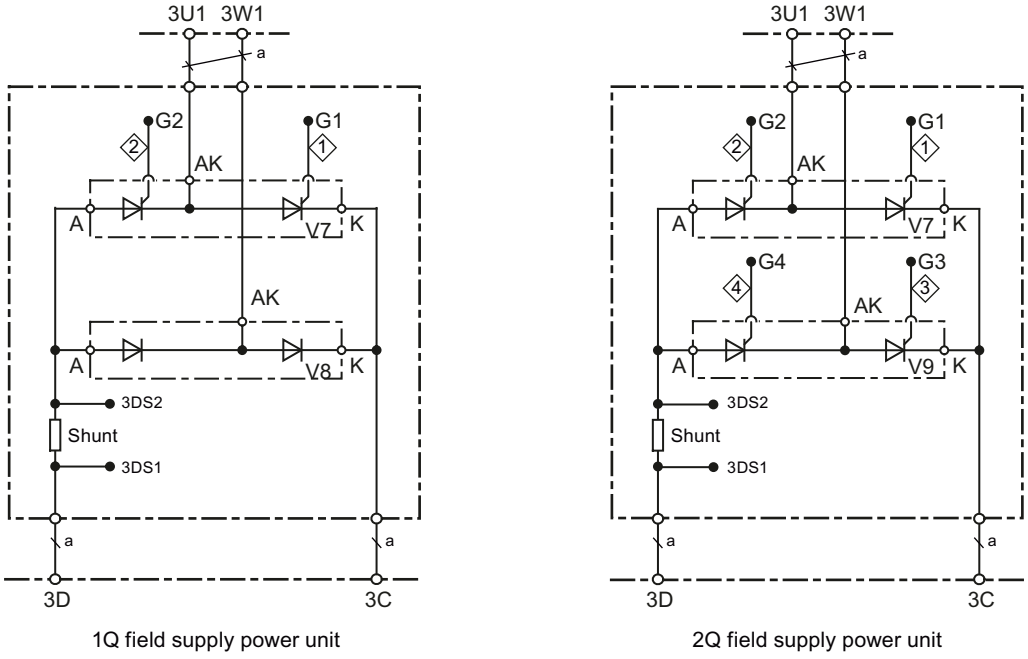

Gate cables: Betatherm 145 0.5 mm², UL
a = Betatherm 145 6 mm², UL

Figure 6-29 Power unit field supply

6.12 Commutating reactors

Commutating reactors should be dimensioned to produce a short-circuit voltage of between 4% and 10% (based on the rated field current and taking supply impedance into account).

Local regulations regarding line harmonic distortion need to be observed when selecting commutating reactors.

Commutating reactor selection list

Table 6-6 Commutating reactors 3ph, rated voltage = 3 AC 400 V/50 Hz or 3 AC 480 V/60 Hz, uk = 4 %

Article number	Rated current	Inductance	Copper losses	Total losses	SCCR	Weight	Rated insulation voltage
6RX1800-4DK00	13 A AC	2.315 mH	22.8 W	33.1 W	2.0 kA (20 ms)	2.9 kg	600 V
6RX1800-4DK01	25 A AC	1.158 mH	30.8 W	53.2 W	5.0 kA (20 ms)	4.4 kg	600 V
6RX1800-4DK02	51 A AC	0.579 mH	43.5 W	73.2 W	6.5 kA (100 ms)	10.9 kg	600 V

Article number	Rated current	Inductance	Copper losses	Total losses	SCCR	Weight	Rated insulation voltage
6RX1800-4DK03	76 A AC	0.386 mH	64.4 W	118.5 W	9.0 kA (100 ms)	13.8 kg	600 V
6RX1800-4DK04	106 A AC	0.278 mH	51.3 W	119.3 W	15 kA (100 ms)	23.9 kg	600 V
6RX1800-4DK05	174 A AC	0.169 mH	164.8 W	206.4 W	15 kA (100 ms)	24.0 kg	600 V
6RX1800-4DK06	232 A AC	0.127 mH	197.4 W	256.2 W	20 kA (100 ms)	26.8 kg	600 V
6RX1800-4DK07	332 A AC	0.089 mH	190.7 W	251.1 W	24 kA (200 ms)	45.8 kg	600 V
6RX1800-4DK08	374 A AC	0.079 mH	186.7 W	251.7 W	24 kA (200 ms)	56.8 kg	600 V
6RX1800-4DK10	498 A AC	0.059 mH	277.0 W	357.4 W	35 kA (200 ms)	60.0 kg	600 V
6RX1800-4DK11	706 A AC	0.042 mH	329.4 W	424.8 W	55 kA (200 ms)	81.6 kg	1000 V
6RX1800-4DK12	996 A AC	0.030 mH	390.3 W	562.8 W	75 kA (200 ms)	100.1 kg	1000 V
6RX1800-4DK13	1328 A AC	0.022 mH	339.3 W	554.5 W	75 kA (200 ms)	138.8 kg	1000 V
6RX1800-4DK14	1660 A AC	0.018 mH	369.3 W	591.9 W	75 kA (200 ms)	210.7 kg	1000 V
6RX1800-4DK15	2490 A AC	0.012 mH	587.3 W	1038.3 W	75 kA (200 ms)	205.6 kg	1000 V

Table 6-7 Commutating reactors 3ph, rated voltage = 3 AC 480 V/50 Hz or 3 AC 575 V/60 Hz, uk = 4 %

Article number	Rated current	Inductance	Copper losses	Total losses	SCCR	Weight	Rated insulation voltage
6RX1800-4FK00	13 A AC	2.779 mH	27.4 W	39.2 W	2.0 kA (20 ms)	2.9 kg	600 V
6RX1800-4FK01	25 A AC	1.389 mH	34.8 W	57.8 W	5.0 kA (20 ms)	6.0 kg	600 V
6RX1800-4FK02	51 A AC	0.695 mH	42.3 W	77.2 W	6.5 kA (100 ms)	11.8 kg	600 V
6RX1800-4FK03	76 A AC	0.463 mH	56.3 W	118.0 W	9.0 kA (100 ms)	16.3 kg	600 V
6RX1800-4FK04	106 A AC	0.333 mH	68.8 W	152.9 W	15 kA (100 ms)	22.3 kg	600 V
6RX1800-4FK05	174 A AC	0.202 mH	204.6 W	255.6 W	15 kA (100 ms)	26.0 kg	600 V
6RX1800-4FK06	232 A AC	0.152 mH	178.3 W	231.4 W	20 kA (100 ms)	37.8 kg	600 V
6RX1800-4FK07	332 A AC	0.106 mH	193.7 W	261.5 W	24 kA (100 ms)	56.1 kg	600 V
6RX1800-4FK08	374 A AC	0.094 mH	189.1 W	279.2 W	24 kA (100 ms)	56.8 kg	600 V
6RX1800-4FK10	498 A AC	0.071 mH	313.8 W	396.9 W	35 kA (200 ms)	78.1 kg	1000 V
6RX1800-4FK11	664 A AC	0.053 mH	255.6 W	360.8 W	75 kA (200 ms)	96.6 kg	1000 V
6RX1800-4FK12	706 A AC	0.050 mH	293.9 W	404.1 W	75 kA (200 ms)	96.6 kg	1000 V
6RX1800-4FK13	913 A AC	0.039 mH	375.6 W	558.6 W	75 kA (200 ms)	114.5 kg	1000 V
6RX1800-4FK14	996 A AC	0.035 mH	332.7 W	532.8 W	75 kA (200 ms)	127.8 kg	1000 V
6RX1800-4FK15	1328 A AC	0.027 mH	320.4 W	573.7 W	75 kA (200 ms)	177.6 kg	1000 V
6RX1800-4FK16	1660 A AC	0.021 mH	436.5 W	819.0 W	75 kA (200 ms)	161.0 kg	1000 V
6RX1800-4FK17	1326 A AC	0.019 mH	464.7 W	819.9 W	75 kA (200 ms)	164.2 kg	1000 V
6RX1800-4FK18	2324 A AC	0.015 mH	671.8 W	1056.7 W	75 kA (200 ms)	258.2 kg	1000 V

Table 6-8 Commutating reactors 3ph, rated voltage = 3 AC 575 V/50 Hz or 3 AC 690 V/60 Hz, uk = 4 %

Article number	Rated current	Inductance	Copper losses	Total losses	SCCR	Weight	Rated insulation voltage
6RX1800-4GK00	51 A AC	0.832 mH	56.8 W	109.7 W	6.5 kA (100 ms)	13.6 kg	600 V
6RX1800-4GK01	106 A AC	0.399 mH	65.6 W	156.7 W	15 kA (100 ms)	26.4 kg	600 V

Article number	Rated current	Inductance	Copper losses	Total losses	SCCR	Weight	Rated insulation voltage
6RX1800-4GK02	174 A AC	0.243 mH	150.0 W	200.5 W	15 kA (100 ms)	34.5 kg	600 V
6RX1800-4GK03	332 A AC	0.127 mH	252.1 W	327.3 W	24 kA (200 ms)	63.1 kg	600 V
6RX1800-4GK04	498 A AC	0.085 mH	330.3 W	427.5 W	35 kA (200 ms)	86.0 kg	1000 V
6RX1800-4GK05	598 A AC	0.071 mH	339.6 W	455.5 W	55 kA (200 ms)	89.8 kg	1000 V
6RX1800-4GK06	631 A AC	0.067 mH	322.8 W	441.1 W	55 kA (200 ms)	95.7 kg	1000 V
6RX1800-4GK07	664 A AC	0.064 mH	380.7 W	547.2 W	75 kA (200 ms)	108.4 kg	1000 V
6RX1800-4GK08	706 A AC	0.060 mH	392.7 W	564.5 W	75 kA (200 ms)	120.6 kg	1000 V
6RX1800-4GK10	830 A AC	0.051 mH	308.1 W	498.3 W	75 kA (200 ms)	134.8 kg	1000 V
6RX1800-4GK11	913 A AC	0.046 mH	320.7 W	515.9 W	75 kA (200 ms)	143.9 kg	1000 V
6RX1800-4GK12	1245 A AC	0.034 mH	371.4 W	605.4 W	75 kA (200 ms)	206.1 kg	1000 V
6RX1800-4GK13	1328 A AC	0.032 mH	503.1 W	812.4 W	75 kA (200 ms)	160.9 kg	1000 V
6RX1800-4GK14	1660 A AC	0.025 mH	631.3 W	993.1 W	75 kA (200 ms)	202.0 kg	1000 V
6RX1800-4GK15	1826 A AC	0.023 mH	614.7 W	1006.9 W	75 kA (200 ms)	212.1 kg	1000 V
6RX1800-4GK16	2158 A AC	0.020 mH	534.6 W	1073.7 W	75 kA (200 ms)	303.0 kg	1000 V
6RX1800-4GK17	2324 A AC	0.018 mH	556.2 W	1110.0 W	75 kA (200 ms)	321.6 kg	1000 V

Table 6-9 Commutating reactors 3ph, rated voltage = 3 AC 690 V/50 Hz or 3 AC 830 V/60 Hz, uk = 4 %

Article number	Rated current	Inductance	Copper losses	Total losses	SCCR	Weight	Rated insulation voltage
6RX1800-4KK00	598 A AC	0.085 mH	388.2 W	562.1 W	55 kA (200 ms)	108.9 kg	1000 V
6RX1800-4KK01	631 A AC	0.080 mH	402.0 W	586.4 W	75 kA (200 ms)	113.3 kg	1000 V
6RX1800-4KK02	789 A AC	0.064 mH	362.7 W	564.6 W	75 kA (200 ms)	141.9 kg	1000 V
6RX1800-4KK03	830 A AC	0.061 mH	350.7 W	561.4 W	75 kA (200 ms)	153.4 kg	1000 V
6RX1800-4KK04	1245 A AC	0.041 mH	505.2 W	845.7 W	75 kA (200 ms)	169.7 kg	1000 V
6RX1800-4KK05	1577 A AC	0.032 mH	716.8 W	1093.8 W	75 kA (200 ms)	226.1 kg	1000 V
6RX1800-4KK06	1660 A AC	0.031 mH	596.0 W	1011.8 W	75 kA (200 ms)	257.2 kg	1000 V
6RX1800-4KK07	2158 A AC	0.024 mH	484.8 W	1185.6 W	75 kA (200 ms)	360.2 kg	1000 V

Table 6-10 Commutating reactors 3ph, rated voltage = 3 AC 830 V/50 Hz or 3 AC 950 V/60 Hz, uk = 4 %

Article number	Rated current	Inductance	Copper losses	Total losses	SCCR	Weight	Rated insulation voltage
6RX1800-4LK00	789 A AC	0.077 mH	312.0 W	532.1 W	75 kA (200 ms)	205.2 kg	1000 V
6RX1800-4LK01	1245 A AC	0.049 mH	692.4 W	1061.9 W	75 kA (200 ms)	222.4 kg	1000 V
6RX1800-4LK02	1577 A AC	0.039 mH	479.4 W	1059.6 W	75 kA (200 ms)	308.5 kg	1000 V
6RX1800-4LK03	1826 A AC	0.033 mH	585.6 W	1269.0 W	75 kA (200 ms)	372.5 kg	1000 V

Table 6-11 Commutating reactors 3ph, rated voltage = 3 AC 950 V/50 Hz, uk = 4 %, operation at 60 Hz and rated current permissible

Article number	Rated current	Inductance	Copper losses	Total losses	SCCR	Weight	Rated insulation voltage
6RX1800-4MK00	1826 A AC	0.038 mH	534.9 W	1303.5 W	75 kA (200 ms)	399.7 kg	1000 V

Table 6-12 Commutating reactors 1ph, rated voltage = 1 AC 400 V/50 Hz or 1 AC 480 V/60 Hz, uk = 4 %

Article number	Rated current	Inductance	Weight	Rated insulation voltage
6RX1800-4DE00	3 A AC	16.977 mH	0.7 kg	600 V
6RX1800-4DE01	5 A AC	10.186 mH	1.5 kg	600 V
6RX1800-4DE02	10 A AC	5.093 mH	2.0 kg	600 V
6RX1800-4DE03	15 A AC	3.395 mH	2.3 kg	600 V
6RX1800-4DE04	25 A AC	2.037 mH	3.0 kg	600 V
6RX1800-4DE05	30 A AC	1.698 mH	3.8 kg	600 V
6RX1800-4DE06	40 A AC	1.273 mH	5.2 kg	600 V
6RX1800-4DE07	85 A AC	0.599 mH	9.6 kg	600 V

Connections:

3-phase reactors with rated current ≤85 A: Terminal blocks
3-phase reactors with rated current >85 A: Connecting lugs
1-phase reactors with rated current ≤30 A: Terminal blocks
1-phase reactors with rated current >30 A: Connecting lugs

Information

Note

3-phase commutating reactors with uk = 2% can be supplied on request.

For SCCR specifications (time specifications 20 ms): These shutdown times are achieved with the recommended semiconductor fuses.

Standards, approvals

REACH, ROHS, CE, cULus

6.13 Fuses

Field circuit

Table 6-13 Recommended fuses for the field circuit

Max. excitation current	Siemens fuse		Bussmann fuse FWP 700V ЯU	
A	Article number	A	Order number	A
3	5SD420	16	FWP-5B	5
5	5SD420	16	FWP-5B	5
10	5SD420	16	FWP-15B	15
15	5SD440	25	FWP-20B	20
25	5SD440	25	FWP-30B	30
30	5SD480	30	FWP-35B	35
40	3NE1802-0	40	FWP-50B	50

Power interface for the Control Module

Slot	Article number	Type
F200 T6.3 A/250 V	6RY1802-0BA00	T 6.3
F400 T1 A / 250 V	6RY1702-0BA00	T 1

The slot for the fuses can be seen on Figure 6-34 Terminal/connector arrangement on the"Power interface for the Control Module" (Page 132).

6.14 Arrangement of printed circuit boards

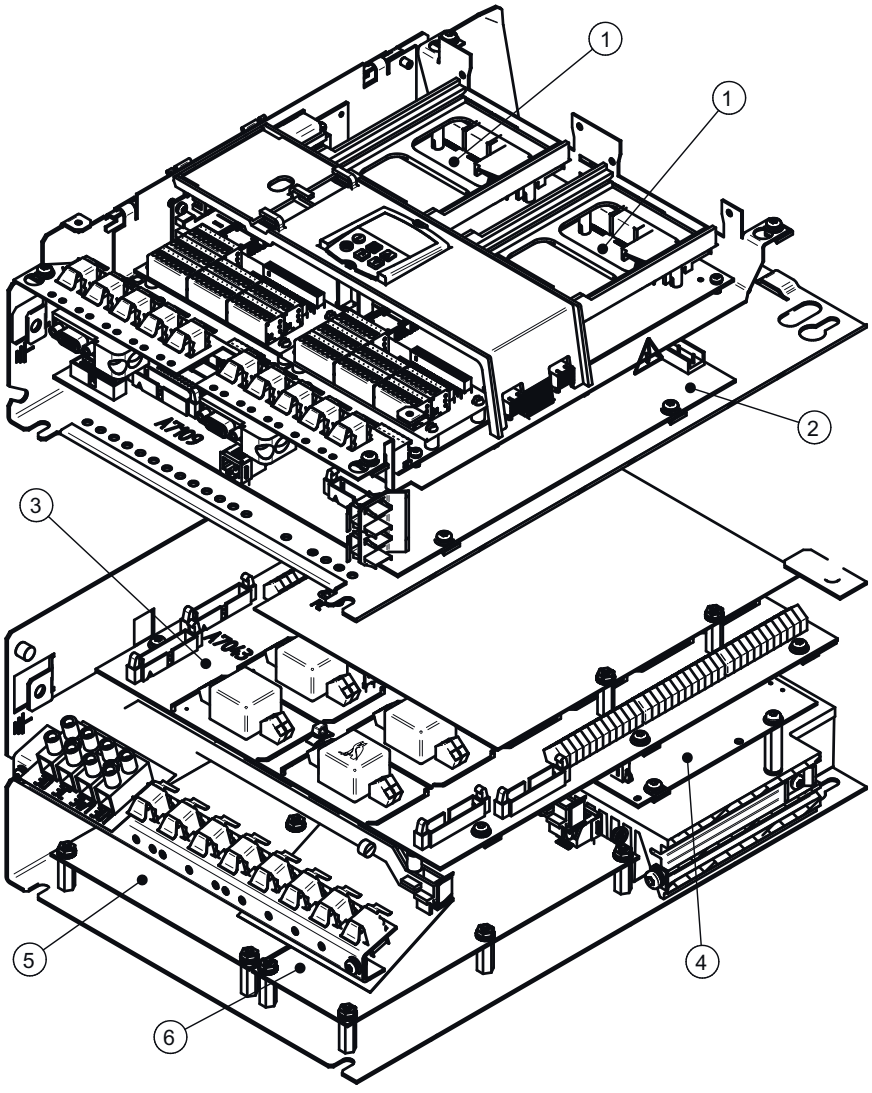

① Control Unit (CUD) (Advanced CUD and CUD on the right are options)
② Power interface for the Control Module
③ Firing pulse transformer module
④ Power unit field supply
⑤ Fuse monitoring
⑥ Voltage measurement

Figure 6-30 Arrangement of printed circuit boards

6.15 Arrangement of customer connections (connector terminals, Faston mounting tabs)

Module - Control Unit (CUD)

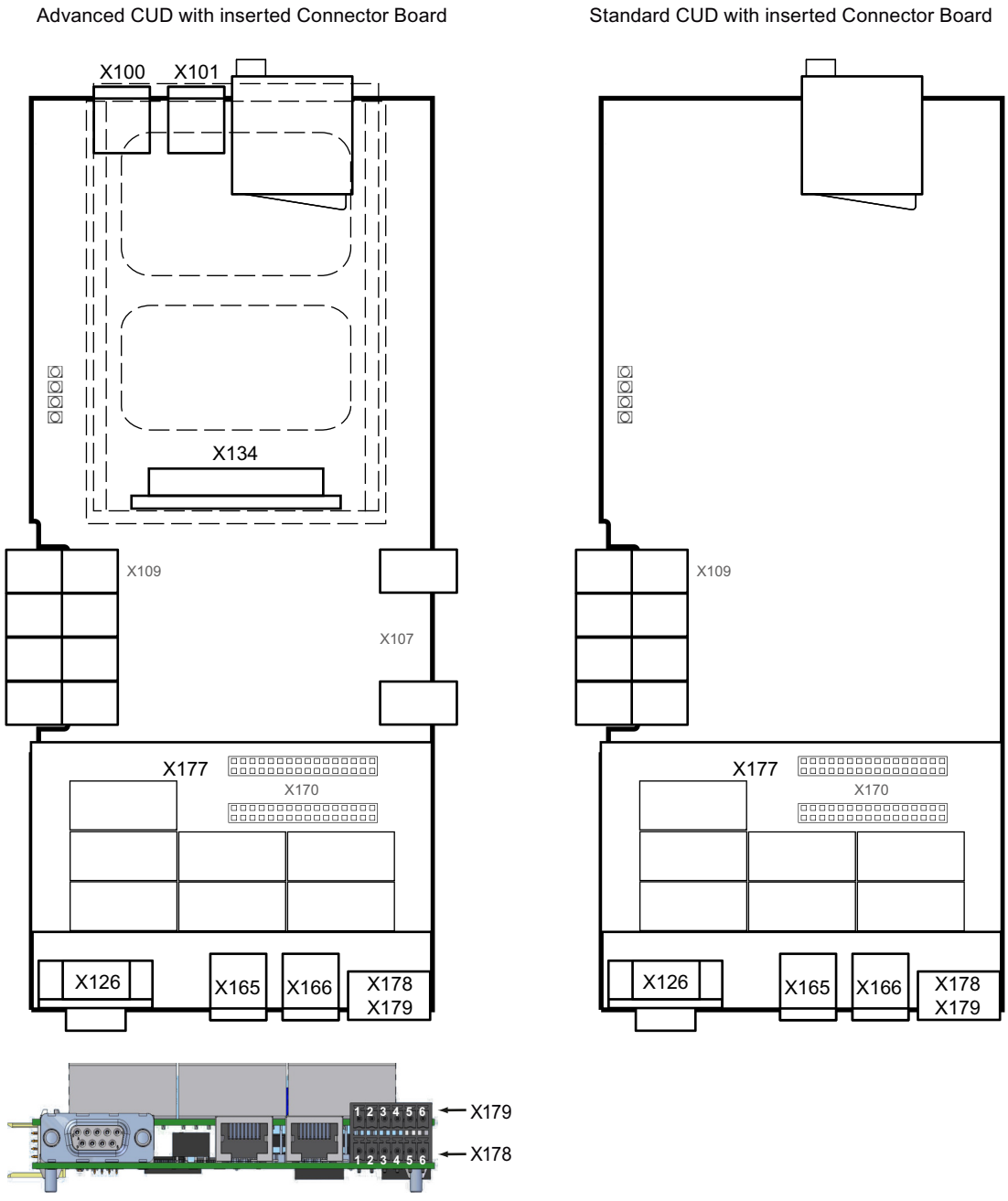

Figure 6-31 Terminal/connector arrangement on the "Control Unit (CUD)"

Allocation Board module

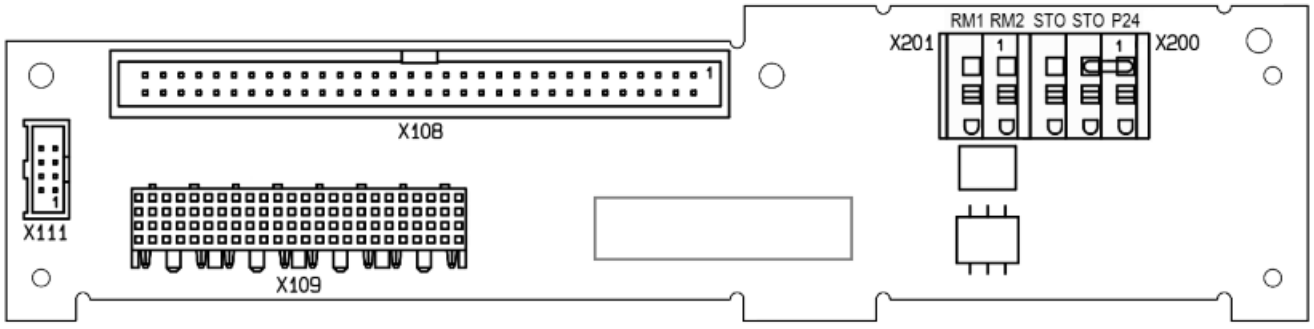

Figure 6-32 Terminal/connector assignment on the "Allocation Board"

Note

Jumper STO to P24 for Functional Safety

The jumper STO to P24 must be removed for use of the safety function and the wiring performed according to one of the applications in Chapter "Functional safety (Page 671)" with a safety relay.

Module - Control Unit (CUD), option G63

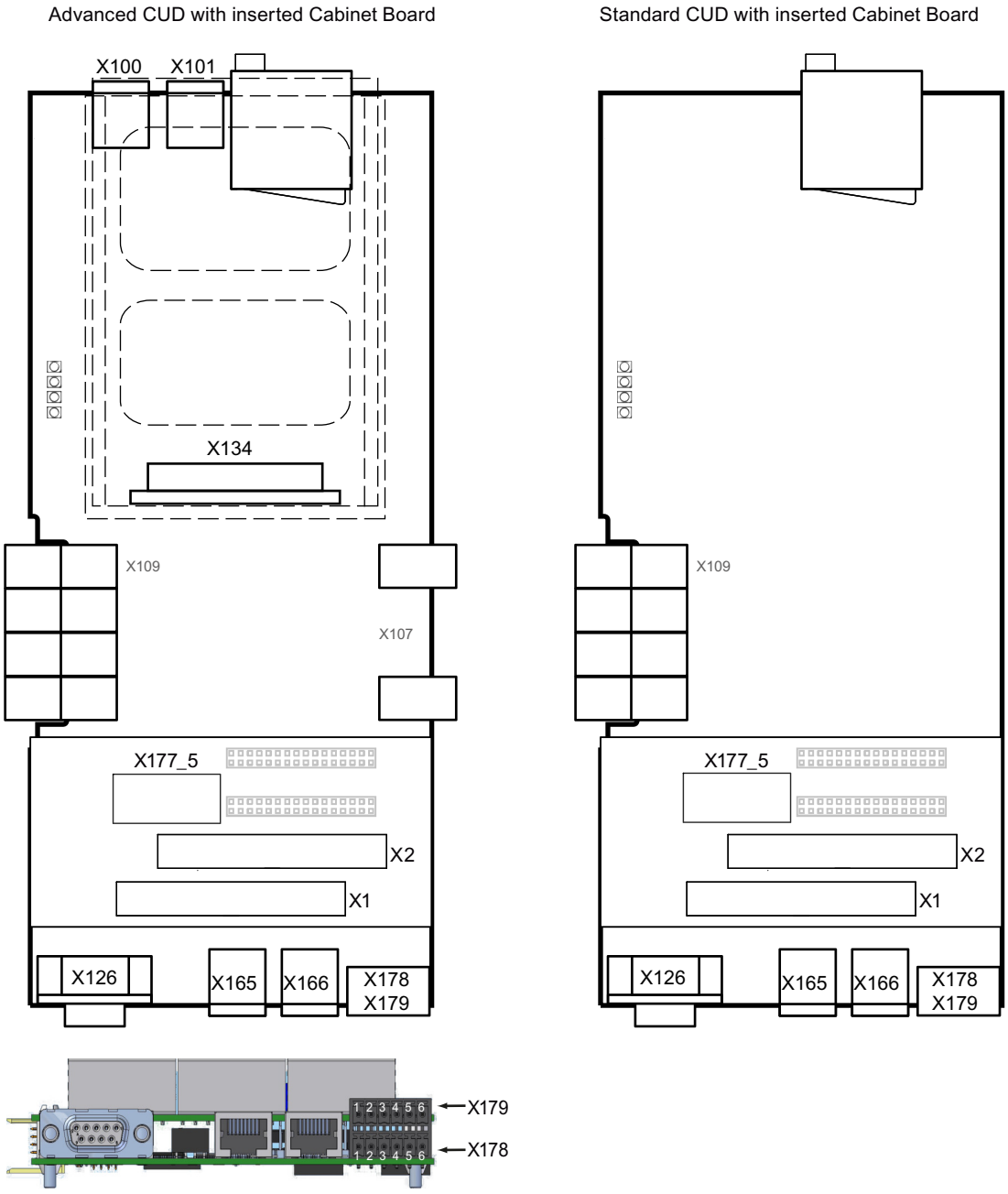

Figure 6-33 Terminal/connector arrangement on the "Control Unit (CUD)" - option G63

"Power interface for the Control Module" module

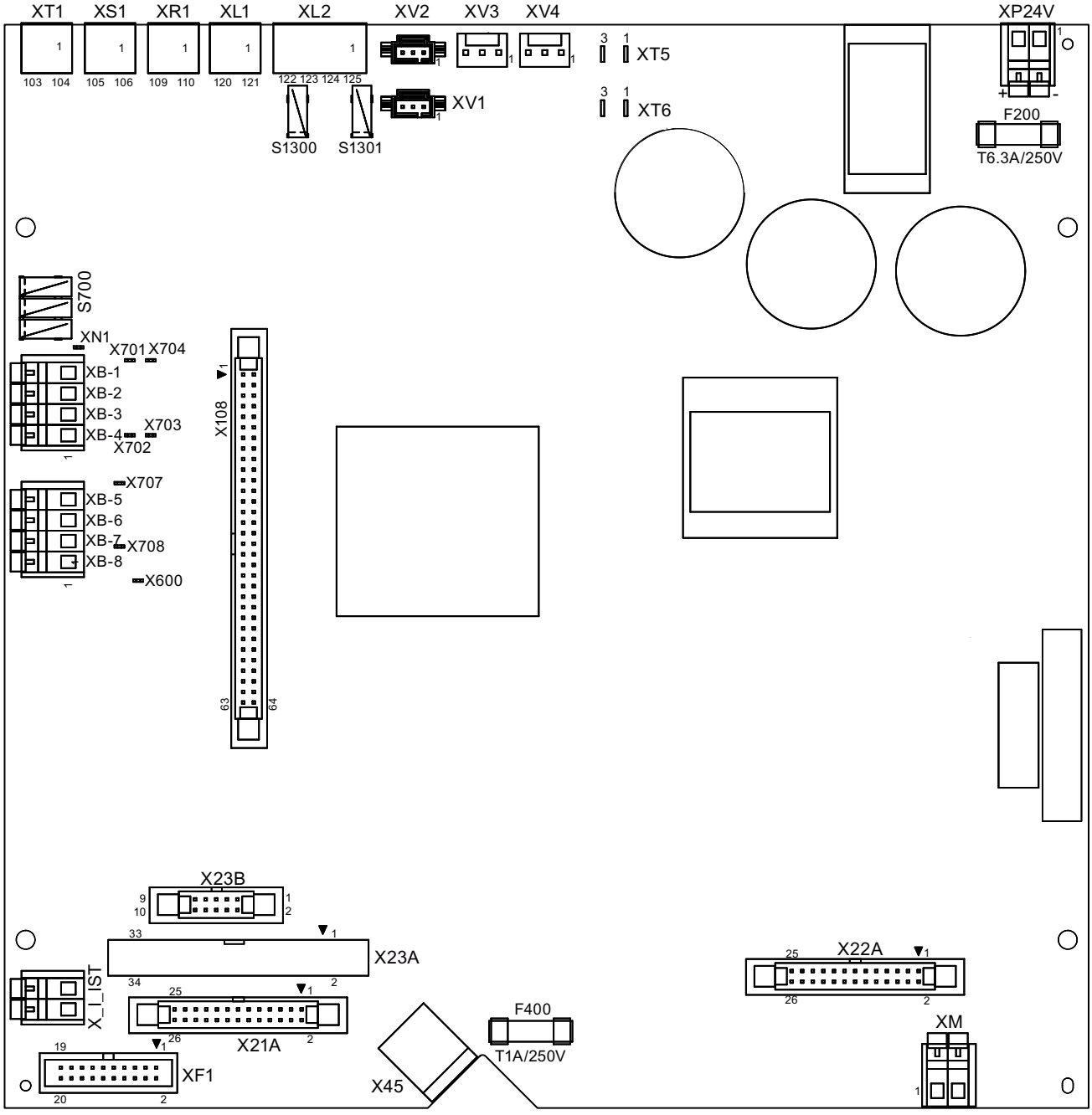

Figure 6-34 Terminal/connector arrangement on the"Power interface for the Control Module"

Modules for option G63

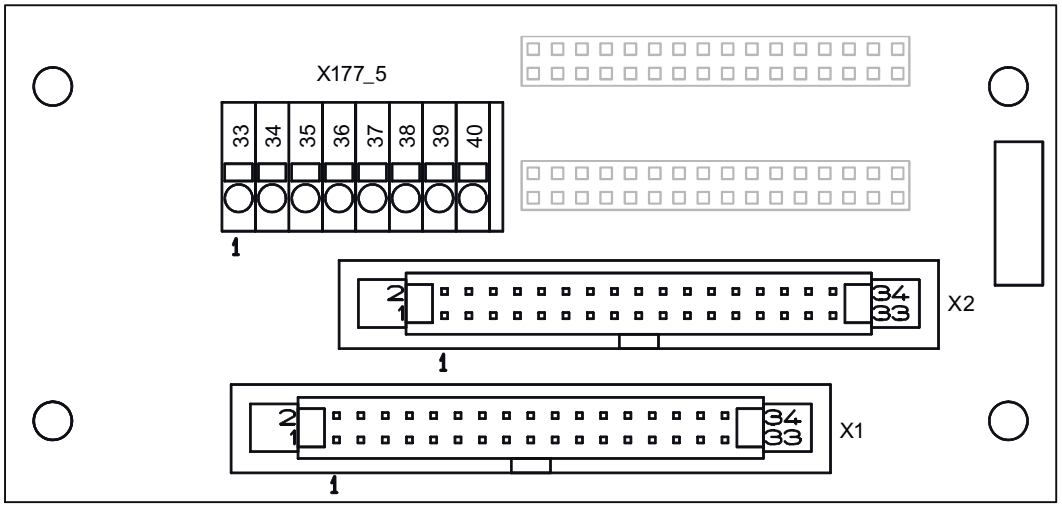

Figure 6-35 Terminal/connector arrangement on the "Cabinet Board"

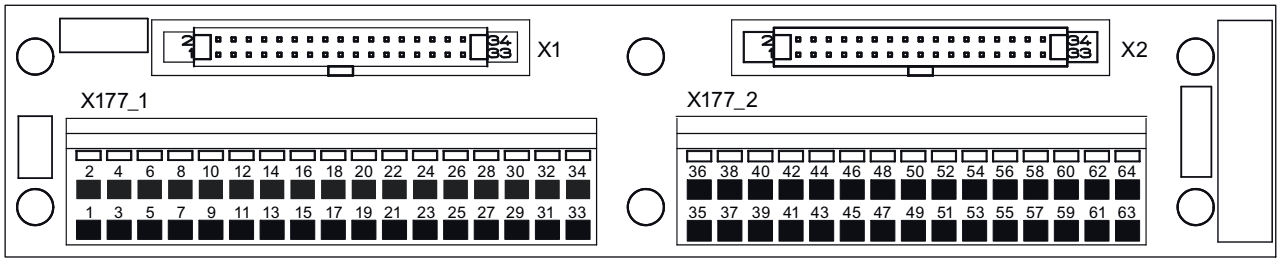

Figure 6-36 Terminal arrangement on the "Terminal Module Cabinet (TMC)"

"Voltage measurement" module

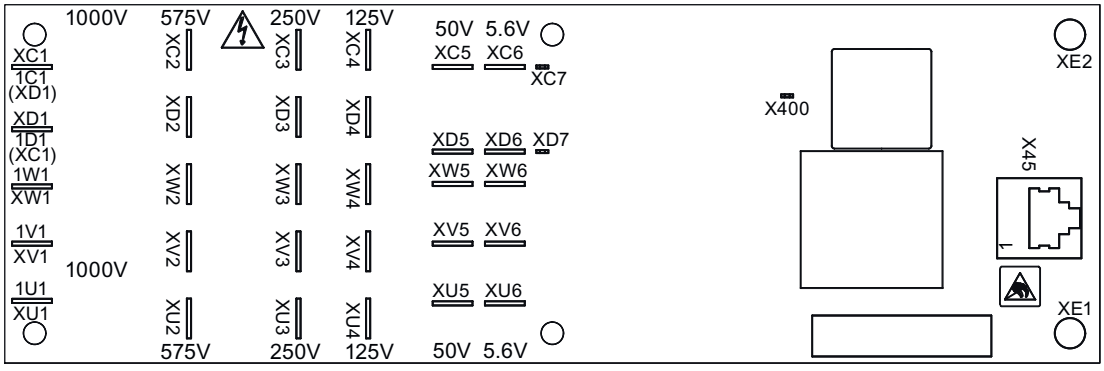

Figure 6-37 Terminal/connector arrangement on the "Voltage measurement"

"Fuse monitoring" module

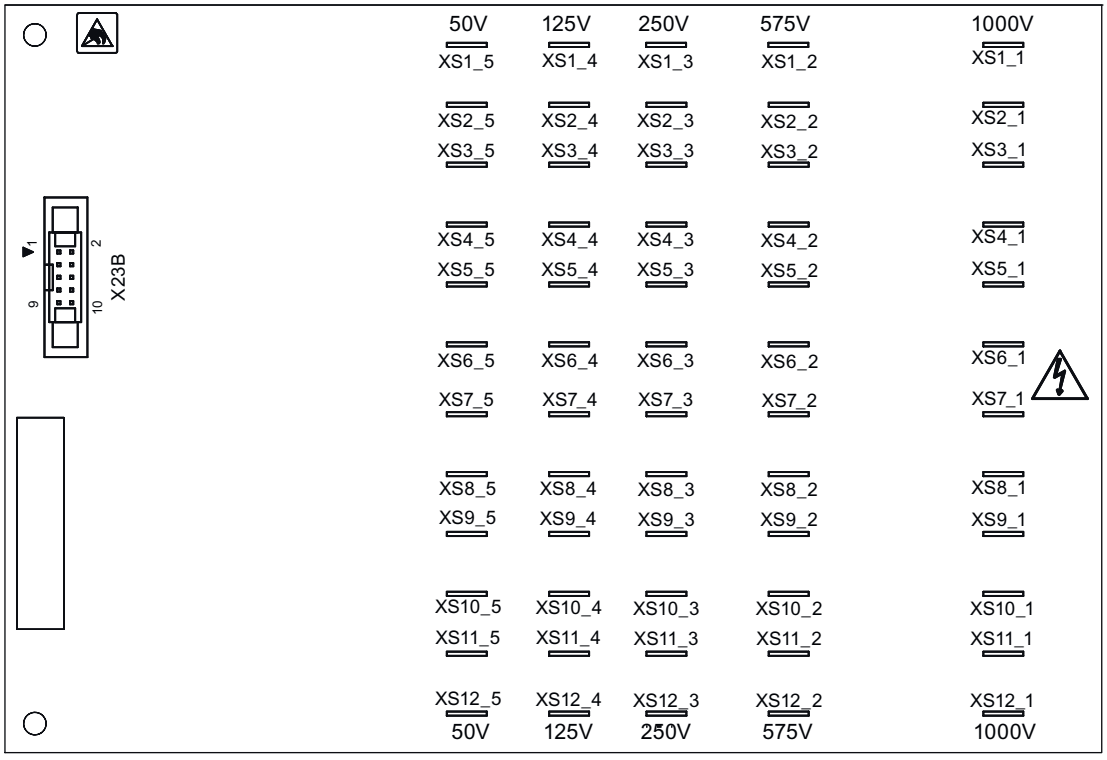

Figure 6-38 Terminal/connector arrangement on the "Fuse monitoring"

"Firing pulse transformer module"

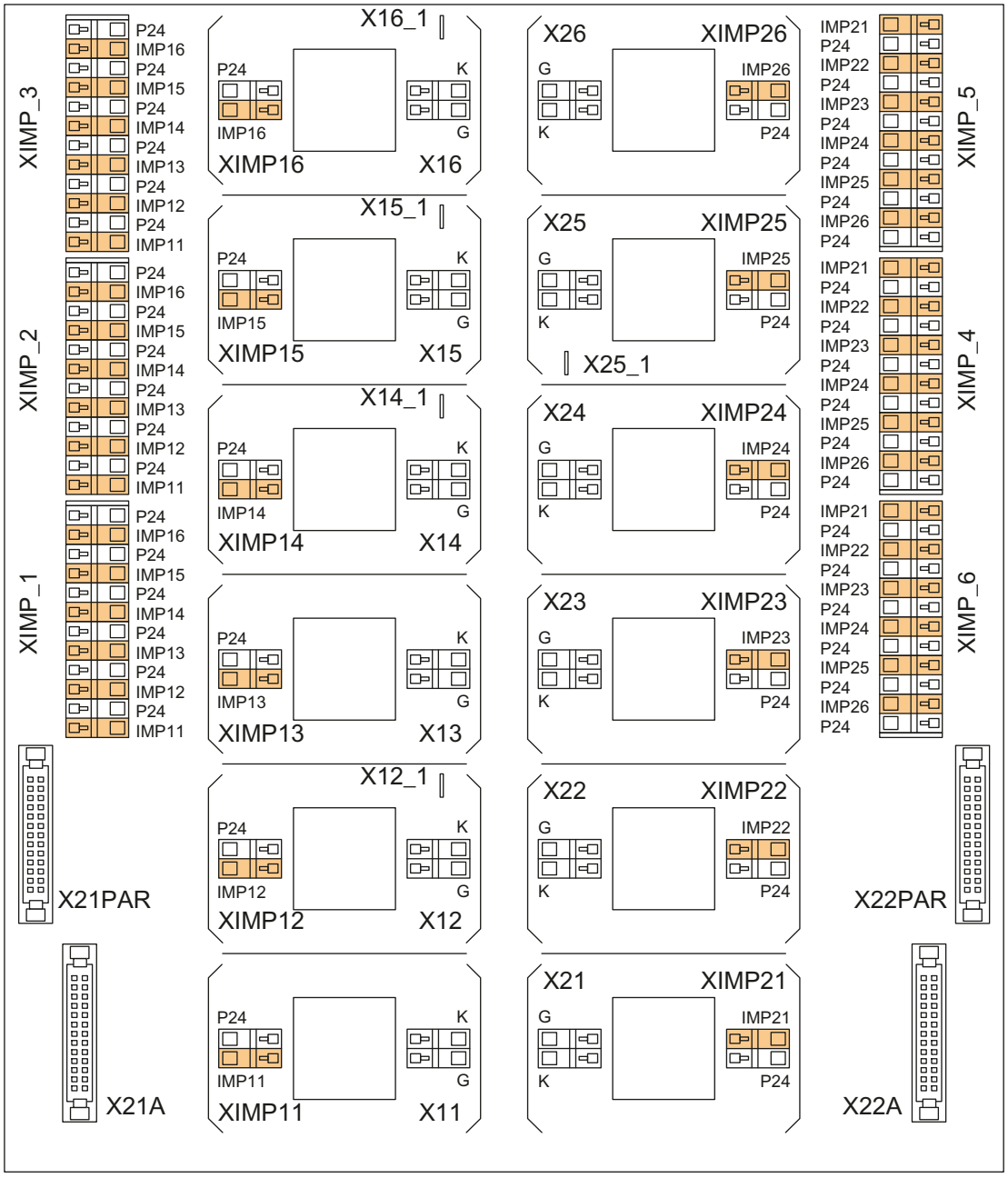

The following parallel connections are made in each case:

- The terminals with the same names on terminal strips XIMP_1, XIMP_2, and XIMP_3.
- The terminals with the same names on terminal strips XIMP_4, XIMP_5, and XIMP_6.
- X21A and X21PAR, X22A and X22PAR

Figure 6-39 Terminal/connector arrangement on the "Firing pulse transformer module"

"Connector Board" module

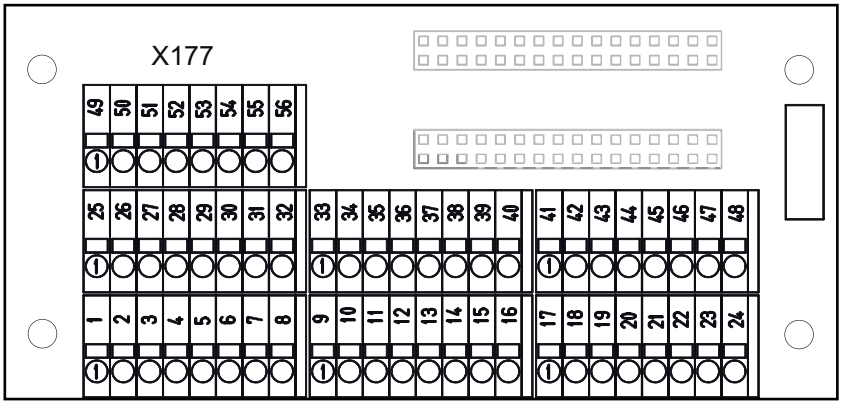

Figure 6-40 Terminal/connector arrangement on the "Connector Board"

"Fuse monitoring distributor" module

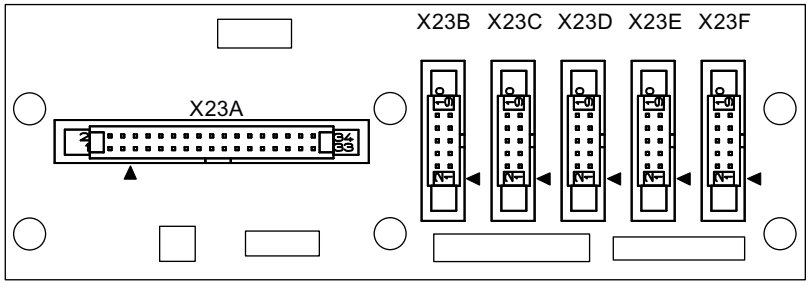

Figure 6-41 Connector arrangement on the "Fuse monitoring distributor"

"40 A field module"

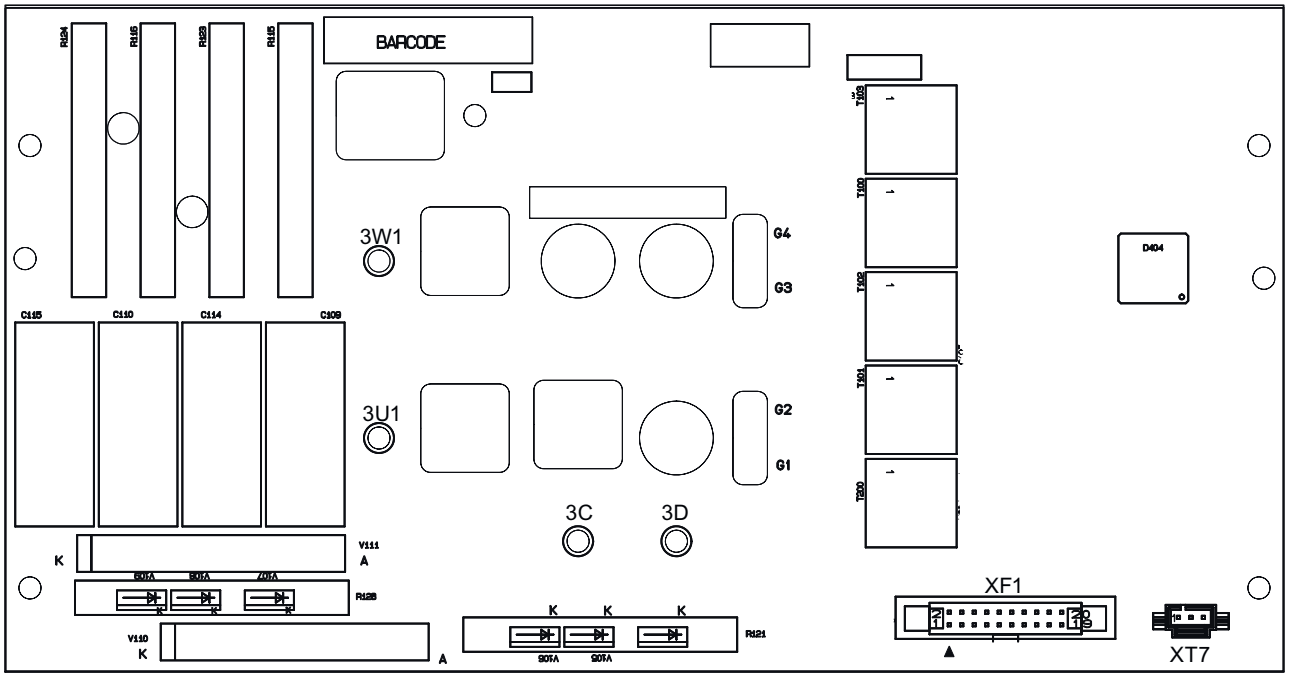

Figure 6-42 Terminals/connector arrangement of the "40 A field module"

6.16 Connector assignment (terminals, Faston mounting tabs, ribbon cables)

NOTICE
Damage or destruction of the device as a result of incorrect connection
Connecting the unit incorrectly can lead to damage or destruction. Power cables and busbars must be mechanically fastened in place outside of the unit.

NOTICE
Dimensioning the connection cables
The information regarding terminal connection options in the tables below is based on values from the terminal data sheets. The connecting cables must be dimensioned for the prevailing currents.

Overview

Table 6-14 Terminals and connectors overview

3U1, 3W1, 3C, 3D	Field circuit
XP24V	Electronics power supply
X21A, X22A	Firing module
X23A	Fuse monitoring distributor
X23B	Fuse monitoring, individual
X45	Voltage measurement
X100, X101	DRIVE-CLiQ
X126	PROFIBUS
X165, X166	Parallel-connection interface
X177 for option G63: X177_1, X177_2, X177_5	Analog inputs, digital inputs, digital outputs, setpoints, reference voltage (P10/N10), serial interface (peer-to-peer), incremental encoder, analog outputs, temperature sensor
X178, X179	Interface to AOP30, USS interface
XF1	Field module
X_I_IST	External current actual value
XB-1 ... XB-8	Current transformer
XL1	Relay output for fan (up to 240 V)
XL2	Fan monitoring
XM	Ground
XR1	Relay output for line contactor (up to 240 V)
XS1	Safety shutdown E-STOP
XT1	Analog tachometer
XT5, XT6	Temperature sensors
X200, X201	Functional safety

6.16.1 Connecting the protective conductor

The SINAMICS DCM Control Module has connecting lugs at the side of both cradles to connect the protective conductor.

In the delivery condition (both cradles assembled), the protective conductor should be connected to one of these lugs. Minimum cross section 4 mm^2.

If the two cradles are installed separately, then a protective conductor must be connected to both cradles.

Note

If the unit is stored for a longer period of time, a layer of corrosion can form on the bare metal surfaces of the cradles. Before connecting the protective conductor, this must be removed from the connection lugs.

6.16.2 Field circuit

Table 6-15 Type of terminals for connecting the field circuit

Type	20E/4DS terminal strip
Connection capacity	Rigid/flexible (mm^2/mm^2): 6 - 16 / 6-10
Stripped length	8 mm
Tightening torque	1.5 Nm

Table 6-16 Assignment of the connections for the field circuit

Terminal	Function	Technical data
3U1, 3W1	Line supply connection	2 AC 400 V (– 20%), 2 AC 480 V (+10%)
3C, 3D	Field winding connection	325/373 rated VDC voltage with 2-ph. 400/480 VAC line connection

6.16.3 Electronic power supply

Table 6-17 Terminal type, electronics power supply

Type	Wago 256 spring-loaded terminal
Connection capacity	0.08 ... 2.5 mm^2, AWG 18-12
Stripped length	5 - 6 mm

Table 6-18 Assignment of terminals for the electronics power supply

Terminal XP24V	Function	Technical data
+ -	24 V infeed	18 V to 30 VDC; current consumption 1 A ... 5 A Recommended conductor cross-section 1.5 mm^2 Internal protection with F200 fuses (6.3 A, time-lag. See Chapter “Fuses (Page 127)”), external protection 6 A ... 16 A, B or C characteristic
"Power interface for the Control Module" module		

6.16.4 Open-loop and closed-loop control section

Table 6-19 Terminal type, open-loop and closed-loop control section

X177, X177_5 (for option G63):	
Type	SPT 1.5 spring-loaded terminal

Connection capacity	Rigid/flexible/conductor sizes (mm^2/mm^2/AWG): 0.2 - 1.5 / 0.2 - 1.5 / 24 - 16 flexible with ferrule with/without plastic sleeve: 0.25 - 1.5 / 0.25 - 0.75 mm^2 (stripped length 8 mm)
Stripped length	10 mm
X177_1, X177_2 (for option G63):	
Type	Two-tier terminal with spring-loaded terminal PK 68
Connection capacity	rigid / flexible 0.5 - 2.5 mm^2
X178, X179:	
Type	FMC 1.5 plug-in terminal
Connection capacity	Rigid/flexible/conductor sizes (mm^2/mm^2/AWG): 0.2 - 1.5 / 0.2 - 1.5 / 24 - 16 flexible with ferrule with/without plastic sleeve: 0.25 - 1.5 / 0.25 - 0.75 mm^2
Stripped length	10 mm
XR1, XS1, XT1:	
Type	MSTB 2.5/CIF plug-in terminal
Connection capacity	Rigid/flexible/conductor sizes (mm^2/mm^2/AWG): 0.2 - 2.5 / 0.2 - 2.5 / 24 - 12 flexible with ferrule with/without plastic sleeve: 0.25 - 2.5 / 0.25 - 2.5 mm^2
Stripped length	7 mm
Tightening torque	0.5 - 0.6 Nm
X126:	
Type	Submin D, 9-pin
X100, X101:	
Type	Modular jack 8/4 (RJ45)
XB-1... XB-8, X_I_IST, XM:	
Type	Wago 256 spring-loaded terminal
Connection capacity	0.08 - 2.5 mm^2, AWG 18 - 12
Stripped length	5 - 6 mm
XT5, XT6:	
Type	Faston connecting tabs, 2.8 × 0.8 mm

6.16.4.1 Terminals on the Connector Board

See also Chapter "Inputs/outputs (Page 371)".

Table 6-20 Assignment, terminal X177

Terminal X177	Function		Technical specifications
Analog inputs (assignable inputs)			
1 2	AI 3 + AI 3 -	Analog input 3	Input type (signal type): Differential input ±10 V; 150 kΩ Resolution approx. 5.4 mV (±11 bits) Common-mode controllability: ±15 V
3 4	AI 4 + AI 4 -	Analog input 4	
5 6	AI 5 + AI 5 -	Analog input 5	
7 8	AI 6 + AI 6 -	Analog input 6	

Terminal X177	Function		Technical specifications
Digital inputs (assignable inputs)			
9 10	24 V DC	24 V supply (output)	24 V DC, short-circuit proof max. Load 200 mA (terminals 9 and 10 together), internal supply referred to internal ground
11	DI 0	Digital input 0	H signal: +15 V to +30 V L signal: –30 V to +5 V or terminal open 8.5 mA at 24 V
12	DI 1	Digital input 1	
13	DI 2	Digital input 2	
14	DI 3	Digital input 3	
Digital inputs/outputs (assignable inputs/outputs)			
15	DI/ DO 4	Digital input /output 4	Type, input/output can be parameterized Features, inputs: H signal: +15 V to +30 V L signal: 0 V to +5 V or terminal open 8.5 mA at 24 V Features, outputs: H signal: +20 V to +26 V L signal: 0 to +2 V short-circuit proof; max. current carrying capacity: 100 mA per DO; max. total load of all DO (CUD left X177:15-22 + CUD right X177:15-22): 800 mA internal protection circuit (freewheeling diode) If overload occurs: alarm A60018
16	DI/ DO 5	Digital input /output 5	
17	DI/ DO 6	Digital input /output 6	
18	DI/ DO 7	Digital input /output 7	
19	DO 0	Digital output 0	H signal: +20 V to +26 V L signal: 0 to +2 V short-circuit proof; max. current carrying capacity: 100 mA per DO; max. total load of all DO (CUD left X177:15-22 + CUD right X177:15-22): 800 mA internal protection circuit (freewheeling diode) If overload occurs: alarm A60018
20	DO 1	Digital output 1	
21	DO 2	Digital output 2	
22	DO 3	Digital output 3	
23, 24	M	Ground, digital	
Analog inputs, setpoint inputs (assignable inputs)			
25 26	AI 0 + AI 0 -	Analog input 0 Main setpoint	Input type (signal type), parameterizable: - Differential input ±10 V; 150 kΩ - Current input 0 - 20 mA; 300 Ω or 4 - 20 mA; 300 Ω Resolution approx. 0.66 mV (±14 bits) Common-mode controllability: ±15 V
27 28	AI 1 + AI 1 -	Analog input 1	
29 30	AI 2 + AI 2 -	Analog input 2	Input type (signal type): Differential input ±10 V; 150 kΩ Resolution approx. 0.66 mV (±14 bits) Common-mode controllability: ±15 V Note: An external armature voltage actual value can also be connected at this input. See function diagram 6902 in the SINAMICS DCM List Manual.
Reference voltage			
31 32	P10 N10	Reference voltage ±10 V (output)	Tolerance ±1% at 25° C Stability 0.1% per 10° K 10 mA short-circuit proof
33, 34	M	Ground, analog	
Serial interface, peer-to-peer RS485			
35, 36	M	Ground, digital	

Terminal X177	Function		Technical specifications
37	TX+	Send cable +	4-wire send cable, positive differential output
38	TX-	Send cable -	4-wire send cable, negative differential output
39	RX+	Receive cable +	4-wire receive cable, positive differential output
40	RX-	Receive cable -	4-wire receive cable, negative differential output
Pulse encoder input			
41	Pulse encoder supply		+13.7 to +15.2 V, 300 mA short-circuit proof (electronically protected)If overload occurs: Fault message F60094
42	Ground, pulse encoder		
43	Track 1+ Incremental signal A		Load: ≤ 5.25 mA at 15 V (without switching losses) Pulse duty factor: 1:1 See below for data relating to cables, cable length, shield support, input pulse levels, hysteresis, track displacement, and pulse frequency.
44	Track 1- Inverse incremental signal A*		
45	Track 2+ Incremental signal B		
46	Track 2- Inverse incremental signal B*		
47	Zero mark+ Reference signal R		
48	Zero mark- Reference signal R*		
Analog outputs (assignable outputs)			
49	AO 0	Analog output 0	±10 V, max. 2 mA short-circuit proof, resolution ±15 bits
50	M	Ground, analog	
51	AO 1	Analog output 1	
52	M	Ground, analog	
Connections for temperature sensor (motor interface 1)			
53	Temp 1		Connect the sensor according to p50490 (see SINAMICS DCM List Manual). The cable to the temperature sensor at the motor must be shielded, the shield must be connected to ground at both ends. The cables for the Temp 1 and Temp 3 connections to the temperature sensor must be approximately the same length. The sense line (Temp 2) is used to compensate cable resistances; if a sense line is not used, then terminals 54 and 55 must be directly connected at the CUD. Connection with/without sense cable: 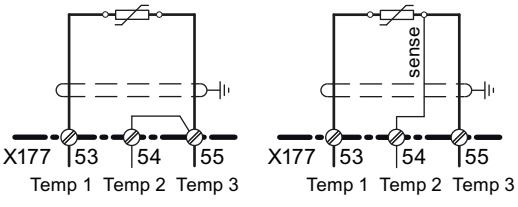
54	Temp 2 (sense cable)		
55	Temp 3		
56	M	Ground, analog	
Connector board module			

6.16.4.2 Using a pulse encoder with SINAMICS DCM

The supported encoder types are listed in Chapter "Encoder evaluation (Page 546)" or in the description of parameter p0400 in the SINAMICS DCM List Manual. The abbreviations used are described in Appendix A.2.

Note

Pulse encoder evaluation via terminals X177.41 to 48 does not support any SSI encoders.

A Sensor Module Cabinet-Mounted SMC30 is required for evaluating SSI encoders, see Chapter "Additional system components (Page 169)".

NOTICE
Selecting the encoder type with p0400 does not result in any changes to the supply voltage for the pulse encoder (terminals X177.41 and 42). Terminal X177.41 always supplies +15 V. An external power supply is required for pulse encoders with other supply voltages (e.g. +5 V).

Characteristic values for the pulse encoder evaluation electronics

- **Input pulse levels**
  Encoder signals (symmetrical/asymmetrical) up to a maximum of 27 V differential voltage can be processed by the evaluation electronics.
  The encoder type is selected using p0400.
  The evaluation electronics are adjusted electronically to the encoder signal voltage:

Encoder type	TTL	HTL
Rated input voltage	5 V	15 V
Low signal level (differential voltage)	< 0.8 V	< 5.0 V
High signal level (differential voltage)	> 2.0 V	> 8.0 V
Hysteresis	> 0.2 V	> 1.0 V
Common-mode controllability	±10 V	±10 V

If the pulse encoder does not supply any symmetrical encoder signals, it must be grounded with each signal cable twisted in pairs and connected to the negative connections of track 1, track 2, and zero mark.

- **Switching frequency**
  The maximum frequency of the encoder pulses is 300 kHz. To ensure the encoder pulses are evaluated correctly, the minimum distance (Tmin) between two encoder signal edges (track 1, track 2), as listed in the table, must be adhered to.

Encoder type	TTL		HTL		
Rated input voltage	5 V		15 V		
Differential voltage [1]	2 V	> 2.5 V	8 V	10 V	> 14 V
Tmin [2]	630 ns	380 ns	630 ns	430 ns	380 ns

[1] Differential voltage at the terminals of the evaluation electronics

[2] The phase error LG (deviation from 90°) that may occur as a result of the encoder and cable can be calculated on the basis of Tmin:
LG = ± (90° – fp × Tmin × 360°)
LG = phase fault
fp = pulse frequency
Tmin = minimum edge clearance
This formula only applies if the pulse duty factor of the encoder signals is 1:1.

If the pulse encoder is incorrectly matched to the encoder cable, disturbing cable reflections will occur at the receiving end. To ensure that encoder pulses of this type can be evaluated without errors, these reflections need to be damped. The limit values listed in the table below must be adhered to in order to prevent the resulting power losses in the evaluation electronics adaptor from being exceeded.

fmax	50 kHz	100 kHz	150 kHz	200 kHz	300 kHz
Differential voltage [1]	≤ 27 V	≤ 22 V	≤ 18 V	≤ 16 V	≤ 14 V

[1] Differential voltage of the encoder pulses without load
(approximately corresponds to the pulse encoder supply voltage)

- **Cable, cable length, shield support**
  The capacitance of the encoder cable must be recharged at each encoder edge change. The rms value of this current is proportional to the cable length and pulse frequency, and must not exceed the current permitted by the encoder manufacturer. A suitable cable that meets the recommendations of the encoder manufacturer must be used, and the maximum

cable length must not be exceeded.
Generally, a twisted conductor pair with shared shielding for the pairs is sufficient for each track.
This reduces mutual interference and crosstalk between the conductors/cables. Shielding all the pairs provides protection against interference pulses. The shield should be connected to the SINAMICS DCM shield support over a large area.

Connecting a pulse encoder

⚠ WARNING

Electric shock due to unconnected cable shields

Hazardous touch voltages can occur through capacitive cross-coupling due to unconnected cable shields.

- Attach the cable shield to the component via terminals for the encoder system connection.

Note

Because the physical transmission media is more robust, the bipolar connection should always be used.

The unipolar connection should only be used if the encoder type does not output push-pull signals.

Also for a unipolar connection, the encoder ground should also be routed in the signal cable.

Signal cables with twisted conductor pairs should be used to improve protection against induced disturbances.

Connection examples

HTL encoder with reference signal, bipolar connection

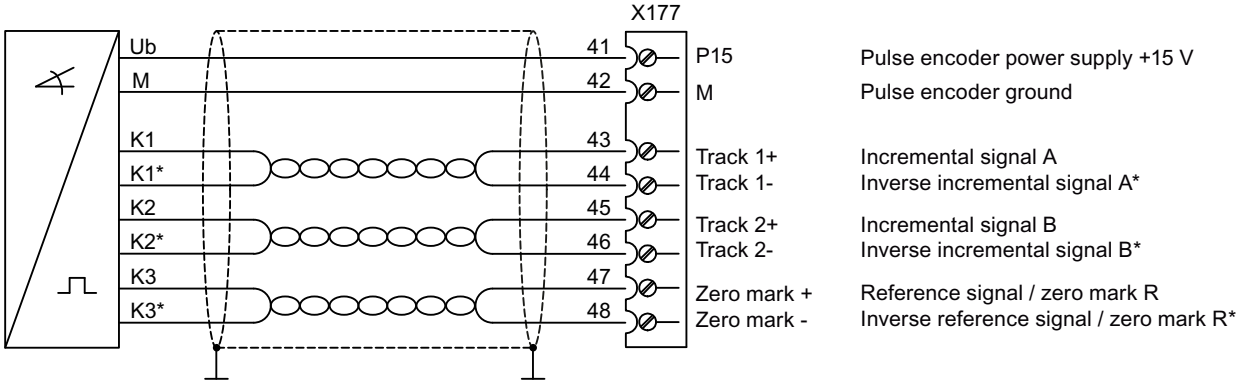

Figure 6-43 Connection example, HTL encoder with reference signal, bipolar connection

HTL encoder with reference signal, unipolar connection including the encoder ground

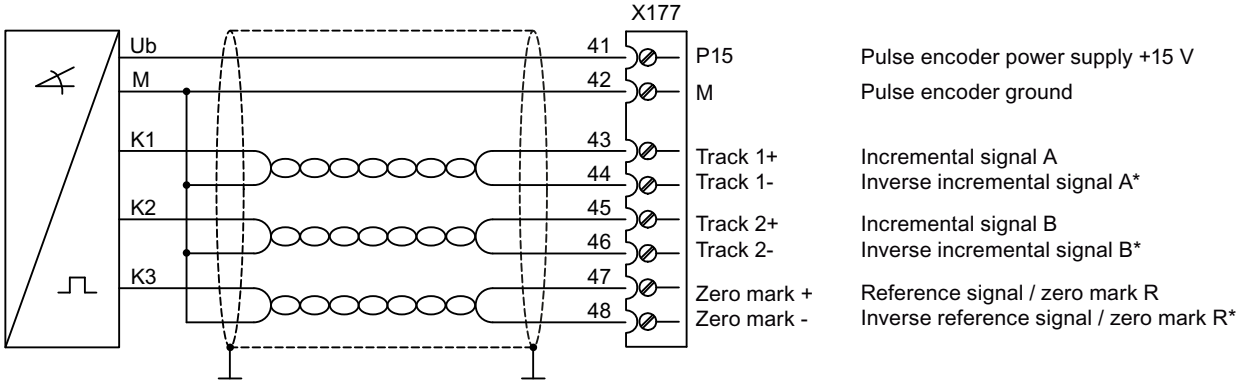

Figure 6-44 Connection example, HTL encoder with reference signal, unipolar connection with encoder ground routed in the cable

HTL encoder with reference signal, unipolar connection without the encoder ground

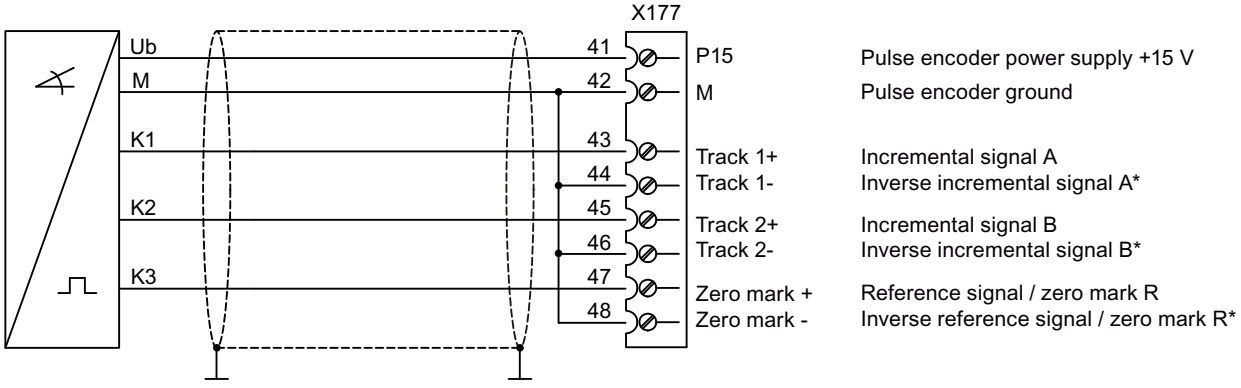

Figure 6-45 Connection example, HTL encoder with reference signal, unipolar connection without the encoder ground

6.16.4.3 Assignment of electronics terminals at the Power Interface

Terminals at the power interface

Table 6-21 Terminals XR1, XS1, XT1, XL1, XL2, XM, X_I_IST, XB

Terminal	Function	Technical data
Analog tachometer XT1		
XT1-103	Tachometer connection 8 to 270 V	±270 V Input resistance 159 kΩ Resolution ±14 bits
XT1-104	Ground, analog M	
Safety shutdown E-STOP XS1		
XS1-105	Input (switch)	Ie = 20 mA
XS1-106	Supply (output)	24 VDC, max. load 1 A, short-circuit proof
Floating relay outputs XR1, XL1		

Terminal	Function	Technical data
XR1-109 XR1-110	Relay for line contactor	Current carrying capacity: ≤ 250 V AC, 4 A; cosφ = 1 ≤ 250 V AC, 2 A; cosφ = 0.4 ≤ 30 V DC, 2 A Max. 4 A external protection, C characteristic recommended
XL1-120 XL1-121	Relay for fan contactor	
Monitoring inputs XL2		
XL2-122 + XL2-123 -	Fan monitoring (fault F60267) Configuration with p51832	Differential inputs max. Input voltage ±50 V Common mode range -2 V to +50 V L signal:<8 V, H signal: >11 V input resistance 30 kΩ switchable resistances 1.8 kΩ: 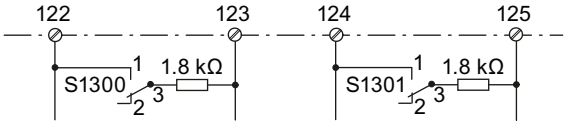
XL2-124 + XL2-125 -	External monitoring (fault F60203) Configuration with p51833	
Electronics ground		
XM-M XM-M	Electronics ground	
Actual current value X_I_IST		
I_I_IST	Actual current value	Input for external actual current value Analog 0 ... -10 V
M_I_IST	Ground reference for actual current value	
Current transformer connections XB		
XB1	Current transformer T1 - k1	Configuration of current transformers in accordance with p51824
XB2	Current transformer T1 - I1 M_BUERDE	
XB3	Current transformer T2 - I2 M_BUERDE	
XB4	Current transformer T2 - k2	
XB5	Amplifier output from T3	Configuration of current transformers in accordance with p51824
XB6	M_BUERDE	
XB7	Current transformer T3 - I3 M_BUERDE	
XB8	Current transformer T3 - k3	
"Power interface for the Control Module" module		

6.16.4.4 Serial interface to AOP30/USS interface

Arrangement of terminals X178 and X179

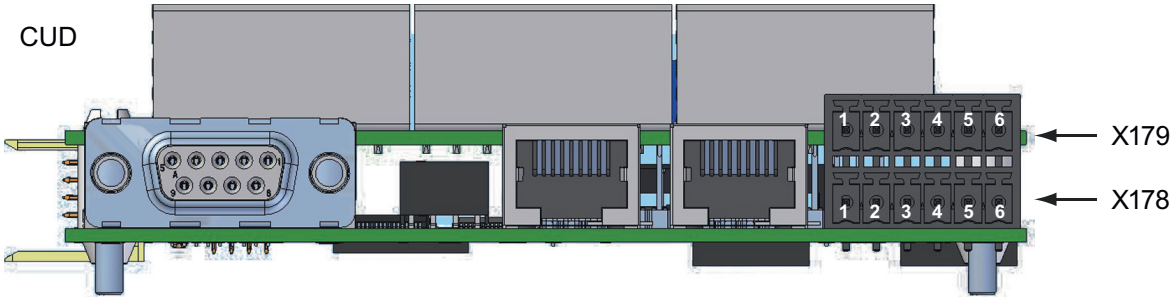

Figure 6-46 Arrangement X178 and X179

Table 6-22 Terminal X178

Terminal X178	Function	Technical specifications
1	Supply (output)	24 VDC short-circuit proof, maximum load 200 mA Internal supply related to internal ground terminal
2	Ground, AOP M	
3	RX+/TX+	Send and receive cable, RS485, two-wire Positive differential input/output
4	RX-/TX-	Send and receive cable, RS485, two-wire Negative differential input/output
5	Ground, digital M	
6	Ground, digital M	
"Control Unit (CUD)" module		

Table 6-23 Terminal X179

Terminal X179	Function	Technical specifications
1	Supply (output)	4.4 to 5.4 VDC short-circuit proof, maximum load 300 mA Internal supply related to internal ground terminal
2	Ground, digital M	
3	TXD1	Send cable, RS232 standard (V.24)
4	RXD1	Receive cable, RS232 standard (V.24)
5	TXD2	Send cable, RS232 standard (V.24)
6	RXD2	Receive cable, RS232 standard (V.24)
"Control Unit (CUD)" module		

Note

Only one of the two interfaces - RS485 (X178-3, 4) or RS232 (X179-3, 4) - may be used.

6.16.4.5 PROFIBUS connection

Table 6-24 PROFIBUS connector assignment

Connector X126	Pin	Signal name	Technical specifications
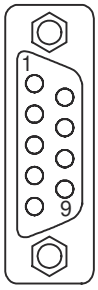	1	-	Not assigned
	2	-	Not assigned
	3	RxD/TxD-P	RS485 receive/transmit data P (B)
	4	CNTR-P	Control signal (TTL)
	5	DGND	PROFIBUS data ground
	6	VP	Positive supply voltage (5 V +/-10%)
	7	-	Not assigned
	8	RxD/TxD-N	RS485 receive/transmit data N (A)
	9	-	Not assigned
"Control Unit (CUD)" module			

6.16.4.6 DRIVE-CLiQ connection

Table 6-25 DRIVE-CLiQ connector assignment

Connector X100, X101	Pin	Signal name	Technical specifications
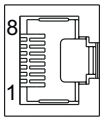	1	TXP	Transmit data +
	2	TXN	Transmit data -
	3	RXP	Receive data +
	4	-	Reserved, do not use
	5	-	Reserved, do not use
	6	RXN	Receive data -
	7	-	Reserved, do not use
	8	-	Reserved, do not use
	-	Shield	Permanently connected to ground
"Advanced CUD" module			

6.16.4.7 Parallel interface

Table 6-26 Connector assignment, parallel interface

Connector X165, X166	Pin	Signal name	Technical specifications
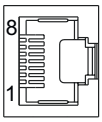	1	SYNC_P	Synchronization +
	2	SYNC_N	Synchronization -
	3	CANH	CAN +
	4	-	Reserved, do not use
	5	-	Reserved, do not use
	6	CANL	CAN -
	7	-	Reserved, do not use
	8	-	Reserved, do not use
	-	Shield	Permanently connected to ground
Standard CUD, Advanced CUD module			

6.16.4.8 Terminal assignment for option G63

The technical data for terminals X177_1, X177_2 and X177_5 corresponds to the specifications for terminal X177 on the Connector Board in the version without option G63, see Table 6-20 Assignment, terminal X177InputsOutputs (Page 140).

Table 6-27 Assignment of the terminals on the Terminal Module Cabinet (TMC) (overview)

Terminal X177_1, X177_2	Function		Description
1st terminal block (X177_1)			
1, 2	AI 3 +, AI 3 -	Analog input 3	See X177.1 and 2
3, 4	AI 4 +, AI 4 -	Analog input 4	See X177.3 and 4
5, 6	AI 5 +, AI 5 -	Analog input 5	See X177.5 and 6
7, 8	AI 6 +, AI 6 -	Analog input 6	See X177.7 and 8
9, 10	24 VDC	24 V supply (output)	24 VDC, short-circuit proof Max. load 200 mA (terminals 9, 10, 57, 58, 59 and 60 combined), internal supply to digital ground and analog ground
11, 12, 13, 14	DI 0, 1, 2, 3	Digital input 0, 1, 2, 3	See X177.11, 12, 13, 14
15, 16, 17, 18	DI/DO 4, 5, 6, 7	Digital input/output 4, 5, 6, 7	See X177.15, 16, 17, 18
19, 20, 21 22	DO 0, 1, 2, 3	Digital output 0, 1, 2, 3	See X177.19, 20, 21, 22, 23, 24
23, 24	M	Ground, digital	
25, 26	AI 0 +, AI 0 -	Analog input 0, main set-point	See X177.25 and 26
27, 28	AI 1 +, AI 1 -	Analog input 1	See X177.27 and 28
29, 30	AI 2 +, AI 2 -	Analog input 2	See X177.29 and 30

Terminal X177_1, X177_2	Function		Description
31, 32	P10, N10	Reference voltage ±10 V (output)	See X177.31, 32, 33, 34
33, 34	M	Ground, analog	
2nd terminal block (X177_2)			
35, 36	M	Ground, digital	See X177.35 and 36
37, 38	RS485: TX+, TX-	Send cable +, -	See X177.37 and 38
39, 40	RS485: RX+, RX-	Receive cable +, -	See X177.39 and 40
41, 42	Pulse encoder supply		See X177.41 and 42
43, 44	Pulse encoder track 1 +/-		See X177.43 and 44
45, 46	Pulse encoder track 2 +/-		See X177.45 and 46
47, 48	Pulse encoder zero mark +/-		See X177.47 and 48
49, 50	AO 0, M	Analog output 0, analog ground	See X177.49 and 50
51, 52	AO 1, M	Analog output 1, analog ground	See X177.51 and 52
53, 54, 55	Temp 1, 2, 3	Temperature sensor, motor interface 1	See X177.53, 54, 55
56	M	Ground, analog	See X177.56
57, 58, 59, 60	24 VDC	24 V supply (output)	24 VDC, short-circuit proof Max. load 200 mA (terminals 9, 10, 57, 58, 59 and 60 combined), internal supply to digital ground and analog ground
61, 62, 63, 64	M	Ground, digital	-
"Terminal Module Cabinet (TMC)" module			

Table 6-28 Assignment of the terminals on the Cabinet Board (overview)

Terminal X177_5	Function		Description
33, 34	M	Ground, analog	-
35, 36	M	Ground, digital	See X177.35 and 36
37, 38	RS485: TX+, TX-	Send cable +, -	See X177.37 and 38
39, 40	RS485: RX+, RX-	Receive cable +, -	See X177.39 and 40
"Cabinet Board" module			

Note:
The terminals on X177_5 are connected in parallel to the terminals with the same name on the Terminal Module Cabinet (TMC).

6.16.4.9 Connectors at the power interface

Table 6-29 Connectors XT5, XT6

Terminal	Function	Technical specifications
Temperature sensor input (XT5)		
XT5-1	Electronics ground GND	Sensor according to p51830[0...2]
XT5-3	Heat sink temperature	
Temperature sensor input (XT6)		
XT6-1	Electronics ground GND	Sensor according to p51830[0...2]
XT6-3	Heat sink temperature	
Zero calibration of actual current value measurement (XN1)		
XN1	Infeed point for zero calibration	See Chapter "Measurement of the armature current (Page 109)"
Ground (X600)		
X600	Ground, e.g. for zero calibration via XN1	
Soldering lugs for load resistor R701 (X701, X702)		
X701	Connection to XB-1	
X702	Connection to XB-2	
Soldering lugs for load resistor R704 (X703, X704)		
X703	Connection to XB-3	
X704	Connection to XB-4	
Soldering lugs for load resistor R708 (X707, X708)		
X707	Connection to XB-7	
X708	Connection to XB-8	
"Power interface for the Control Module" module		

6.16.4.10 CompactFlash Card slot

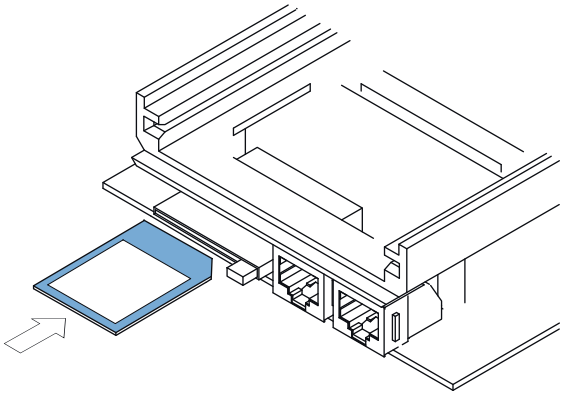

Figure 6-47 "Control Unit (CUD)" module, memory card slot

NOTICE

Undesirable response or data loss if the memory card is improperly handled

- The memory card may only be inserted as shown in the previous figure.
- For disturbance-free operation of the control electronics (CUD), the memory card recommended by Siemens must only be inserted in the device when the SINAMICS DCM is switched-off and in a no voltage condition. Inserting the card when operational can result in undefined states of the device with the corresponding effects.
- The memory card must not be removed or inserted while data is being saved. For the procedure to safely remove the memory card, see Chapter "Memory card functions (Page 329)".
- When returning a defective "Control Unit (CUD)" module, do not return the memory card along with it – instead, keep it in a safe place so that you can use it in the replacement module.
- To avoid data loss when removing the memory card, it must be logged off from the device as described in Section "Safely removing the memory card".

A memory card is not required for the standard drive operation.

The memory card is required for the following applications:

- Saving parameters
  Parameters are saved on the memory card and can simply be copied onto a new CUD if it needs to be replaced.
- Firmware update
  It is easy to perform a firmware update using a memory card.
- Loading additional languages to the Advanced Operator Panel AOP30 (with the exception of German, English and Chinese)
- Performing an offline long-time trace. See also Chapter "Diagnostic memory (Page 605)".
- Loading the DCC block library into the drive
- For communication via Modbus TCP (see Chapter "Communication via MODBUS TCP (Page 517)").
  The memory card must remain inserted at all times.
- For the SINAMICS Link function (see Chapter "Communication via SINAMICS Link (Page 484)").
  The memory card must remain inserted at all times.
- Saving the Diagstor.spd diagnostics file to the \USER\SINAMICS\DATA\LOG directory. See also Chapter "Trend recorder function (Page 606)".

6.16.5 Voltage measurement equipment

Connection type: Faston mounting tabs, 4.8 mm

Table 6-30 Voltage measurement connections

Connection	Function	Technical data, comments
XU1 XV1 XW1	Measurement of the line voltage Phases U-V-W (1000 V)	Rated line voltage (armature) >575 V to 1000 V (p51821 = 1,000)
XC1 XD1	Measurement of the armature voltage (1000 V)	Rated line voltage (armature) >575 V to 1000 V (p51821 = 1,000)
XU2 XV2 XW2	Measurement of the line voltage Phases U-V-W (575 V)	Rated line voltage (armature) >250 V to 575 V (p51821 = 575)
XC2 XD2	Measurement of the armature voltage (575 V)	Rated line voltage (armature) >250 V to 575 V (p51821 = 575)
XU3 XV3 XW3	Measurement of the line voltage Phases U-V-W (250 V)	Rated line voltage (armature) >125 V to 250 V (p51821 = 250)
XC3 XD3	Measurement of the armature voltage (250 V)	Rated line voltage (armature) >125 V to 250 V (p51821 = 250)
XU4 XV4 XW4	Measurement of the line voltage Phases U-V-W (125 V)	Rated line voltage (armature) >50 V to 125 V (p51821 = 125)
XC4 XD4	Measurement of the armature voltage (125 V)	Rated line voltage (armature) >50 V to 125 V (p51821 = 125)
XU5 XV5 XW5	Measurement of the line voltage Phases U-V-W (50 V)	Rated line voltage (armature) >5.6 V to 50 V (p51821 = 50)
XC5 XD5	Measurement of the armature voltage (50 V)	Rated line voltage (armature) >5.6 V to 50 V (p51821 = 50)
XU6 XV6 XW6	Measurement of the line voltage Phases U-V-W (5.6 V)	Rated line voltage (armature) ≤5.6 V (p51821 = 6)
XC6 XD6	Measurement of the armature voltage (5.6 V)	Rated line voltage (armature) ≤5.6 V (p51821 = 6)
"Voltage measurement" module		

6.16.6 Fuse monitoring equipment

Connection type: Faston mounting tabs, 4.8 mm

Table 6-31 Connections for fuse monitoring equipment

Connection	Function	Technical data, comments
XS1_1 XS2_1	Fuse 1 (1000 V)	Measurement cables for the fuses to be monitored at a rated line voltage >575 V to 1000 V*) Resistance between two associated connections: 388.4 kΩ **)
XS3_1 XS4_1	Fuse 2 (1000 V)	
XS5_1 XS6_1	Fuse 3 (1000 V)	
XS7_1 XS8_1	Fuse 4 (1000 V)	
XS9_1 XS10_1	Fuse 5 (1000 V)	
XS11_1 XS12_1	Fuse 6 (1000 V)	
XS1_2 XS2_2	Fuse 1 (575 V)	Measurement cables for the fuses to be monitored at a rated line voltage >250 V to 600 V*) Resistance between two associated connections: 196.4 kΩ **)
XS3_2 XS4_2	Fuse 2 (575 V)	
XS5_2 XS6_2	Fuse 3 (575 V)	
XS7_2 XS8_2	Fuse 4 (575 V)	
XS9_2 XS10_2	Fuse 5 (575 V)	
XS11_2 XS12_2	Fuse 6 (575 V)	
XS1_3 XS2_3	Fuse 1 (250 V)	Measurement cables for the fuses to be monitored at a rated line voltage >125 V to 250 V*) Resistance between two associated connections: 100.4 kΩ **)
XS3_3 XS4_3	Fuse 2 (250 V)	
XS5_3 XS6_3	Fuse 3 (250 V)	
XS7_3 XS8_3	Fuse 4 (250 V)	
XS9_3 XS10_3	Fuse 5 (250 V)	
XS11_3 XS12_3	Fuse 6 (250 V)	

Connection	Function	Technical data, comments
XS1_4 XS2_4	Fuse 1 (125 V)	Measurement cables for the fuses to be monitored at a rated line voltage >50 V to 125 V*) Resistance between two associated connections: 52.4 kΩ **)
XS3_4 XS4_4	Fuse 2 (125 V)	
XS5_4 XS6_4	Fuse 3 (125 V)	
XS7_4 XS8_4	Fuse 4 (125 V)	
XS9_4 XS10_4	Fuse 5 (125 V)	
XS11_4 XS12_4	Fuse 6 (125 V)	
XS1_5 XS2_5	Fuse 1 (50 V)	Measurement cables for the fuses to be monitored at a rated line voltage = 10 V to 50 V*) Resistance between two associated connections: 18.8 kΩ **)
XS3_5 XS4_5	Fuse 2 (50 V)	
XS5_5 XS6_5	Fuse 3 (50 V)	
XS7_5 XS8_5	Fuse 4 (50 V)	
XS9_5 XS10_5	Fuse 5 (50 V)	
XS11_5 XS12_5	Fuse 6 (50 V)	
*) The fuse monitoring equipment is generally connected to the armature current circuit, although it can also be used for the field circuit, fan circuit, or the primary circuit of a heavy-current transformer. The connections used for the fuse monitoring depend on the voltage that is present at a fuse that has ruptured. **) This resistor is in parallel with the fuse. A bridge rectifier is connected in series to this resistor; this means that the specified value cannot be correctly measured using a commercially available ohmmeter.		
"Fuse monitoring" module		

Activating/deactivating fuse monitoring using p51831 (0=OFF, 1=ON).

6.16.7 Firing pulse transformers

Table 6-32 Terminal type, firing pulse module

XIMP_1 to XIMP_26, X11 to X26	
Type	Wago 256 spring-loaded terminal
Connection capacity	0.08 ... 2.5 mm^2, AWG 18-12
Stripped length	5 - 6 mm
X12_1, X14_1, X15_1, X16_1, X25_1	
Type	Faston mounting tabs, 6.3 mm

The P24 on the "Power interface for the Control Module" is protected by F400 fuses (1 A, time-lag).

Table 6-33 Firing pulse module connections

Terminal, connection	Function	Technical data, comments
XIMP_1 control for firing pulse transformers for the thyristors		
IMP11 P24	For thyristor V11	If the firing pulse transformer module is divided up (please refer to the section titled "Removal/Installation and division of modules"), the controls for the firing pulse transformers must be routed via these terminal connections. This involves making the following connections: XIMP_1 - IMP11 → XIMP11 - IMP11 (for thyristor V11) XIMP_1 - P24 → XIMP11 - P24 (for thyristor V11) XIMP_1 - IMP12 → XIMP12 - IMP12 (for thyristor V12) XIMP_1 - P24 → XIMP12 - P24 (for thyristor V12) etc.
IMP12 P24	For thyristor V12	
IMP13 P24	For thyristor V13	
IMP14 P24	For thyristor V14	
IMP15 P24	For thyristor V15	
IMP16 P24	For thyristor V16	
XIMP_2		
Same as XIMP_1 The terminals on terminal strip XIMP_2 are parallel to the terminals on terminal strip XIMP_1 with the same name.		
XIMP_3		
Same as XIMP_1 The terminals on terminal strip XIMP_3 are parallel to the terminals on terminal strip XIMP_1 with the same name.		
XIMP_4 control for firing pulse transformers for the thyristors		
IMP21 P24	For thyristor V21	If the firing pulse transformer module is divided up (please refer to the section titled "Removal/Installation and division of modules"), the controls for the firing pulse transformers must be routed via these terminal connections. This involves making the following connections: XIMP_4 - IMP21 → XIMP21 - IMP21 (for thyristor V21) XIMP_4 - P24 → XIMP21 - P24 (for thyristor V11) XIMP_4 - IMP22 → XIMP22 - IMP22 (for thyristor V22) XIMP_4 - P24 → XIMP22 - P24 (for thyristor V12) etc.
IMP22 P24	For thyristor V22	
IMP23 P24	For thyristor V23	
IMP24 P24	For thyristor V24	
IMP25 P24	For thyristor V25	
IMP26 P24	For thyristor V26	
XIMP_5		
Same as XIMP_4 The terminals on terminal strip XIMP_5 are parallel to the terminals on terminal strip XIMP_4 with the same name.		
XIMP_6		
Same as XIMP_4 The terminals on terminal strip XIMP_6 are parallel to the terminals on terminal strip XIMP_4 with the same name.		
XIMP11 control for firing pulse transformers for the thyristors		
IMP11 P24	For thyristor V11	Only to be connected if the firing pulse transformer module is divided up (see terminal strip XIMP_1)

Terminal, connection	Function	Technical data, comments
X11		
G, K	Firing cable, thyristor V11	Firing pulse (see below) gate (G) to auxiliary cathode (K)
XIMP12 control for firing pulse transformers for the thyristors		
IMP12 P24	For thyristor V12	Only to be connected if the firing pulse transformer module is divided up (see terminal strip XIMP_1)
X12		
G, K	Firing cable, thyristor V12	Firing pulse (see below) gate (G) to auxiliary cathode (K)
XIMP13 control for firing pulse transformers for the thyristors		
IMP13 P24	For thyristor V13	Only to be connected if the firing pulse transformer module is divided up (see terminal strip XIMP_1)
X13		
G, K	Firing cable, thyristor V13	Firing pulse (see below) gate (G) to auxiliary cathode (K)
XIMP14 control for firing pulse transformers for the thyristors		
IMP14 P24	For thyristor V14	Only to be connected if the firing pulse transformer module is divided up (see terminal strip XIMP_1)
X14		
G, K	Firing cable, thyristor V14	Firing pulse (see below) gate (G) to auxiliary cathode (K)
XIMP15 control for firing pulse transformers for the thyristors		
IMP15 P24	For thyristor V15	Only to be connected if the firing pulse transformer module is divided up (see terminal strip XIMP_1)
X15		
G, K	Firing cable, thyristor V15	Firing pulse (see below) gate (G) to auxiliary cathode (K)
XIMP16 control for firing pulse transformers for the thyristors		
IMP16 P24	For thyristor V16	Only to be connected if the firing pulse transformer module is divided up (see terminal strip XIMP_1)
X16		
G, K	Firing cable, thyristor V16	Firing pulse (see below) gate (G) to auxiliary cathode (K)
XIMP21 control for firing pulse transformers for the thyristors		
IMP21 P24	For thyristor V21	Only to be connected if the firing pulse transformer module is divided up (see terminal strip XIMP_4)
X21		
G, K	Firing cable, thyristor V21	Firing pulse (see below) gate (G) to auxiliary cathode (K)
XIMP22 control for firing pulse transformers for the thyristors		
IMP22 P24	For thyristor V22	Only to be connected if the firing pulse transformer module is divided up (see terminal strip XIMP_4)
X22		
G, K	Firing cable, thyristor V22	Firing pulse (see below) gate (G) to auxiliary cathode (K)
XIMP23 control for firing pulse transformers for the thyristors		
IMP23 P24	For thyristor V23	Only to be connected if the firing pulse transformer module is divided up (see terminal strip XIMP_4)
X23		
G, K	Firing cable, thyristor V23	Firing pulse (see below) gate (G) to auxiliary cathode (K)
XIMP24 control for firing pulse transformers for the thyristors		

Terminal, connection	Function	Technical data, comments
IMP24 P24	For thyristor V24	Only to be connected if the firing pulse transformer module is divided up (see terminal strip XIMP_4)
X24		
G, K	Firing cable, thyristor V24	Firing pulse (see below) gate (G) to auxiliary cathode (K)
XIMP25 control for firing pulse transformers for the thyristors		
IMP25 P24	For thyristor V25	Only to be connected if the firing pulse transformer module is divided up (see terminal strip XIMP_4)
X25		
G, K	Firing cable, thyristor V25	Firing pulse (see below) gate (G) to auxiliary cathode (K)
XIMP26 control for firing pulse transformers for the thyristors		
IMP26 P24	For thyristor V26	Only to be connected if the firing pulse transformer module is divided up (see terminal strip XIMP_4)
X26		
G, K	Firing cable, thyristor V26	Firing pulse (see below) gate (G) to auxiliary cathode (K)
Outputs for voltage measurement		
X12_1	Armature line voltage W	When the firing cables are connected to the thyristors in the power unit, the line and armature voltages are automatically present at the firing pulse transformer module. These voltages can then be routed from here (connections X12_1, etc.) to the voltage measurement equipment, without having to route any additional cables to the power unit. See also Chapter "Connecting the external power unit".
X14_1	Armature line voltage U	
X15_1	Armature voltage 1C1	
X16_1	Armature line voltage V	
X25_1	Armature voltage 1D1	
"Firing pulse transformer module"		

6.16.8 Firing pulse

Time sequence

The time sequence for firing pulses is set via parameter p51826:

p51826[0] Length of first pulse (factory setting = 50 µs)
p51826[1] Length of other pulses (factory setting = 35 µs)
p51826[2] Length of pause (factory setting = 70 µs)

Notes

- If p51826[0] = 105 or p51826[1] = 105: Block pulse (without pulse chopping)
- If p51826[0] ≤ p51826[1] is set, p51826[0] will be ignored and the first pulse will have the same length as all the other pulses.
- p50079 is used for short pulse/long pulse selection.

p50079 = 0 Short pulses, pulse length 890 µs
p50079 = 1 Long pulses, pulse duration up to approx. 0.1 ms before the next pulse

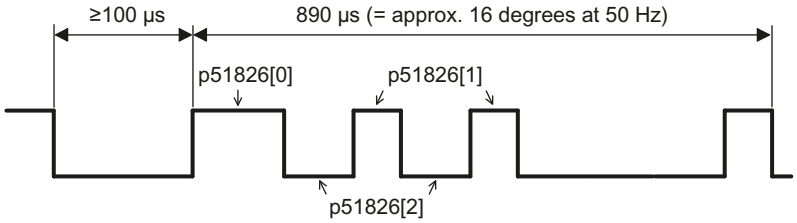

Figure 6-48 Firing pulse - time sequence

The pulse shape of the current depends on the length of the cable to the thyristor (cathode/gate). Cable inductance causes the rising edge of the current pulse to become slower as the cable length increases.

Relationship between firing current and output voltage (incl. tolerances):

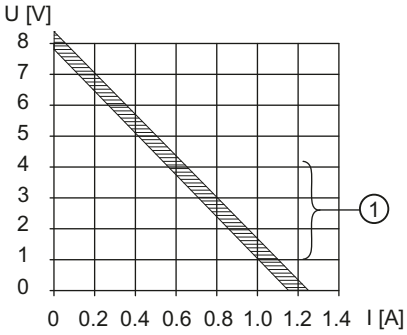

① normal working range of thyristors is from 1 to 4.2 V

No-load voltage = 7.8 to 8.4 V

Short-circuit current = 1.15 to 1.25 A

Application

The firing condition for the thyristor used (minimum firing current) must be to the left of the firing circuit characteristic. The firing current can be determined graphically by finding the point at which the thyristor's input characteristic intersects with the firing circuit's output characteristic. It is important to remember that the thyristor's gate/cathode voltage drop increases as the temperature decreases.

Examples of oscillograms

Firing voltage = gate/cathode voltage with 1 m twisted cable from the firing current circuit to the thyristor's gate connection

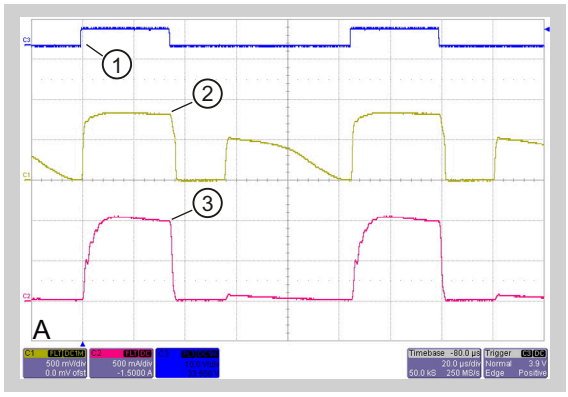

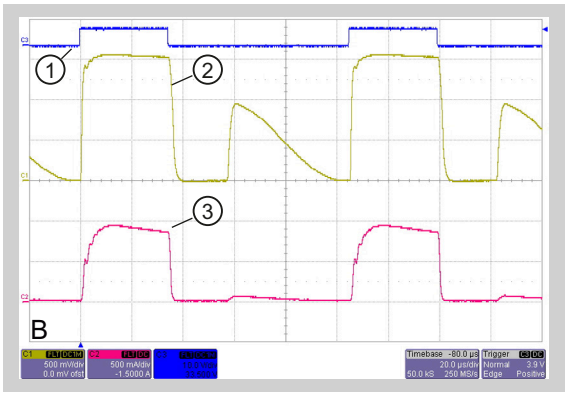

A Substitution load 20 Ω in parallel with 2 diodes
B Substitution load 20 Ω in parallel with 4 diodes
① Control signal
② Voltage at load (0.5 V/div)
③ Current through load (0.5 A/div)

Figure 6-49 Firing pulse - oscillograms

6.16.9 Ribbon cables

Firing pulse cable, torque direction 1, connectors X21A/X21PAR

Table 6-34 Assignment X21A, X21PAR

Function	Pin	Signal name	Connection values / comments
Free	1		
Free	2		
Free	3		
Electronics ground	4	M	
Thyristor firing pulse, armature 2	5	IMP_12	24 V / 2 A pulse
24 V supply, firing	6	P24_Z	24 VDC / 2 A
Electronics ground	7	M	
Thyristor firing pulse, armature 6	8	IMP_16	24 V / 2 A pulse
24 V supply, firing	9	P24_Z	24 VDC / 2 A
Electronics ground	10	M	
Thyristor firing pulse, armature 4	11	IMP_14	24 V / 2 A pulse
24 V supply, firing	12	P24_Z	24 VDC / 2 A
Electronics ground	13	M	
Thyristor firing pulse, armature 5	14	IMP_15	24 V / 2 A pulse
24 V supply, firing	15	P24_Z	24 VDC / 2 A
Electronics ground	16	M	
Thyristor firing pulse, armature 3	17	IMP_13	24 V / 2 A pulse
24 V supply, firing	18	P24_Z	24 VDC / 2 A
Electronics ground	19	M	
Thyristor firing pulse, armature 1	20	IMP_11	24 V / 2 A pulse
24 V supply, firing	21	P24_Z	24 VDC / 2 A
Electronics ground	22	M	
Actual current value	23	I_IST	analog ±10 V
Ground reference for actual current value	24	M_I_IST	analog ±10 V
Electronic grounds	25	M	
Free	26		
Modules: "Power interface for the Control Module" / "Firing pulse transformer module"			
Connectors X21A and X21PAR are connected in parallel on the firing pulse transformer module, except for I_IST (pin 23) and M_I_IST (pin 24)			
Ribbon cable, 26 pole			

Firing pulse cable, torque direction 2, connectors X22A/X22PAR

Table 6-35 Assignment X22A, X22PAR

Function	Pin	Signal name	Connection values / comments
Free	1		
Free	2		
Free	3		
Electronics ground	4	M	
Thyristor firing pulse, armature 2	5	IMP_22	24 V / 2 A pulse
24 V supply, firing	6	P24_Z	24 VDC / 2 A
Electronics ground	7	M	
Thyristor firing pulse, armature 6	8	IMP_26	24 V / 2 A pulse
24 V supply, firing	9	P24_Z	24 VDC / 2 A
Electronics ground	10	M	
Thyristor firing pulse, armature 4	11	IMP_24	24 V / 2 A pulse
24 V supply, firing	12	P24_Z	24 VDC / 2 A
Electronics ground	13	M	
Thyristor firing pulse, armature 5	14	IMP_25	4 V / 2 A pulse
24 V supply, firing	15	P24_Z	24 VDC / 2 A
Electronics ground	16	M	
Thyristor firing pulse, armature 3	17	IMP_23	24 V / 2 A pulse
24 V supply, firing	18	P24_Z	24 VDC / 2 A
Electronics ground	19	M	
Thyristor firing pulse, armature 1	20	IMP_21	24 V / 2 A pulse
24 V supply, firing	21	P24_Z	24 VDC / 2 A
Electronics ground	22	M	
Free	23		
Free	24		
Electronics ground	25	M	
Free	26		
Modules: "Power interface for the Control Module" / "Firing pulse transformer module"			
Connectors X22A and X22PAR are connected in parallel on the firing pulse transformer module			
Ribbon cable, 26 pole			

Power interface connecting cable - fuse monitoring equipment

Table 6-36 Assignment X23B

Function	Pin	Signal name	Connection values / comments
24 V supply	1	P24	22...26 V
24 V supply	2	P24	22...26 V
Fuse monitoring	3	SICHERUNG_OK	24 V logic
Fuse monitoring	4	SICHERUNG_OK	24 V logic
Fuse monitoring	5	SICHERUNG_OK	24 V logic
Fuse monitoring	6	SICHERUNG_OK	24 V logic
Fuse monitoring	7	SICHERUNG_OK	24 V logic
Fuse monitoring	8	SICHERUNG_OK	24 V logic
Ground	9	M	
Ground	10	M	
"Power interface for the Control Module" / "Fuse monitoring or fuse monitoring distributor"			
Ribbon cable, 10 pole			

Table 6-37 Assignment X23A

Function	Pin	Signal name	Connection values / comments
24 V supply	1	P24	22...26 V
24 V supply	2	P24	22...26 V
Fuse monitoring	3	SICHERUNG_OK	24 V logic
Fuse monitoring	4	SICHERUNG_OK	24 V logic
Fuse monitoring	5	SICHERUNG_OK	24 V logic
Fuse monitoring	6	SICHERUNG_OK	24 V logic
Fuse monitoring	7	SICHERUNG_OK	24 V logic
Fuse monitoring	8	SICHERUNG_OK	24 V logic
Fuse monitoring	9	SICHERUNG_OK	24 V logic
Fuse monitoring	10	SICHERUNG_OK	24 V logic
Fuse monitoring	11	SICHERUNG_OK	24 V logic
Fuse monitoring	12	SICHERUNG_OK	24 V logic
Fuse monitoring	13	SICHERUNG_OK	24 V logic
Fuse monitoring	14	SICHERUNG_OK	24 V logic
Fuse monitoring	15	SICHERUNG_OK	24 V logic
Fuse monitoring	16	SICHERUNG_OK	24 V logic
Fuse monitoring	17	SICHERUNG_OK	24 V logic
Fuse monitoring	18	SICHERUNG_OK	24 V logic
Fuse monitoring	19	SICHERUNG_OK	24 V logic
Fuse monitoring	20	SICHERUNG_OK	24 V logic
Fuse monitoring	21	SICHERUNG_OK	24 V logic
Fuse monitoring	22	SICHERUNG_OK	24 V logic
Fuse monitoring	23	SICHERUNG_OK	24 V logic
Fuse monitoring	24	SICHERUNG_OK	24 V logic
Fuse monitoring	25	SICHERUNG_OK	24 V logic
Fuse monitoring	26	SICHERUNG_OK	24 V logic
Fuse monitoring	27	SICHERUNG_OK	24 V logic
Fuse monitoring	28	SICHERUNG_OK	24 V logic
Fuse monitoring	29	SICHERUNG_OK	24 V logic
Fuse monitoring	30	SICHERUNG_OK	24 V logic
Fuse monitoring	31	SICHERUNG_OK	24 V logic
Fuse monitoring	32	SICHERUNG_OK	24 V logic
Ground	33	M	
Ground	34	M	
Modules: "Power interface for the Control Module" / "Fuse monitoring distributor"			
Ribbon cable, 34 pole			

Power interface connecting cable - voltage measurement equipment

Table 6-38 Assignment X45

Function	Pin	Signal name	Connection values / comments
RS485 signal data +	1	ANKER_RS485_SP	
RS485 signal data -	2	ANKER_RS485_SN	
3.3 V supply	3	P3V3	3.3 V
RS485 signal direction +	4	ANKER_RS485_DP	
RS485 signal direction -	5	ANKER_RS485_DN	
Ground	6	M	
16 VAC supply	7	HF16_1	±16 V HF
16 VAC supply	8	HF16_2	±16 V HF
Modules: "Power interface for the Control Module" / "Voltage sensing"			
CAT5 cable, 8 pole			

Power interface connecting cable - field supply

Table 6-39 Assignment XF1

Function	Pin	Signal name	Connection values / comments
Electronics ground	1	M	
16 VAC supply	2	HF16_1	± 16 V HF
16 VAC supply	3	HF16_2	± 16 V HF
Electronics ground	4	M	
Thyristor firing pulse, field 1	5	IMP_F1	CMOS 5 V
Electronics ground	6	M	
Thyristor firing pulse, field 2	7	IMP_F2	CMOS 5 V
Electronics ground	8	M	
RS485 signal data +	9	ANKER_RS485_SP	
RS485 signal data -	10	ANKER_RS485_SN	
3.3 V supply	11	P3V3	3.3 V
RS485 signal direction +	12	ANKER_RS485_DP	
RS485 signal direction –	13	ANKER_RS485_DN	
Electronics ground	14	M	
+24 V firing supply	15	P24_ZV	22...26 V
+24 V firing supply	16	P24_ZV	22...26 V
Electronics ground	17	M	
Heat sink temperature sensor	18	KK_TEMP_FELD	analog
Electronics ground	19	M	
Electronics ground	20	M	
Modules: "Power Interface for the Control Module" / "Power unit field supply"			
Ribbon cable, 20 pole			

6.16.10 Assignment of the RS485 cable to the AOP30

Note

A 24 V power supply is required to operate the AOP30. For a maximum cable length of 50 m, this can be taken from the CUD of the SINAMICS DCM. An external power supply must be used for cable lengths > 50 m.

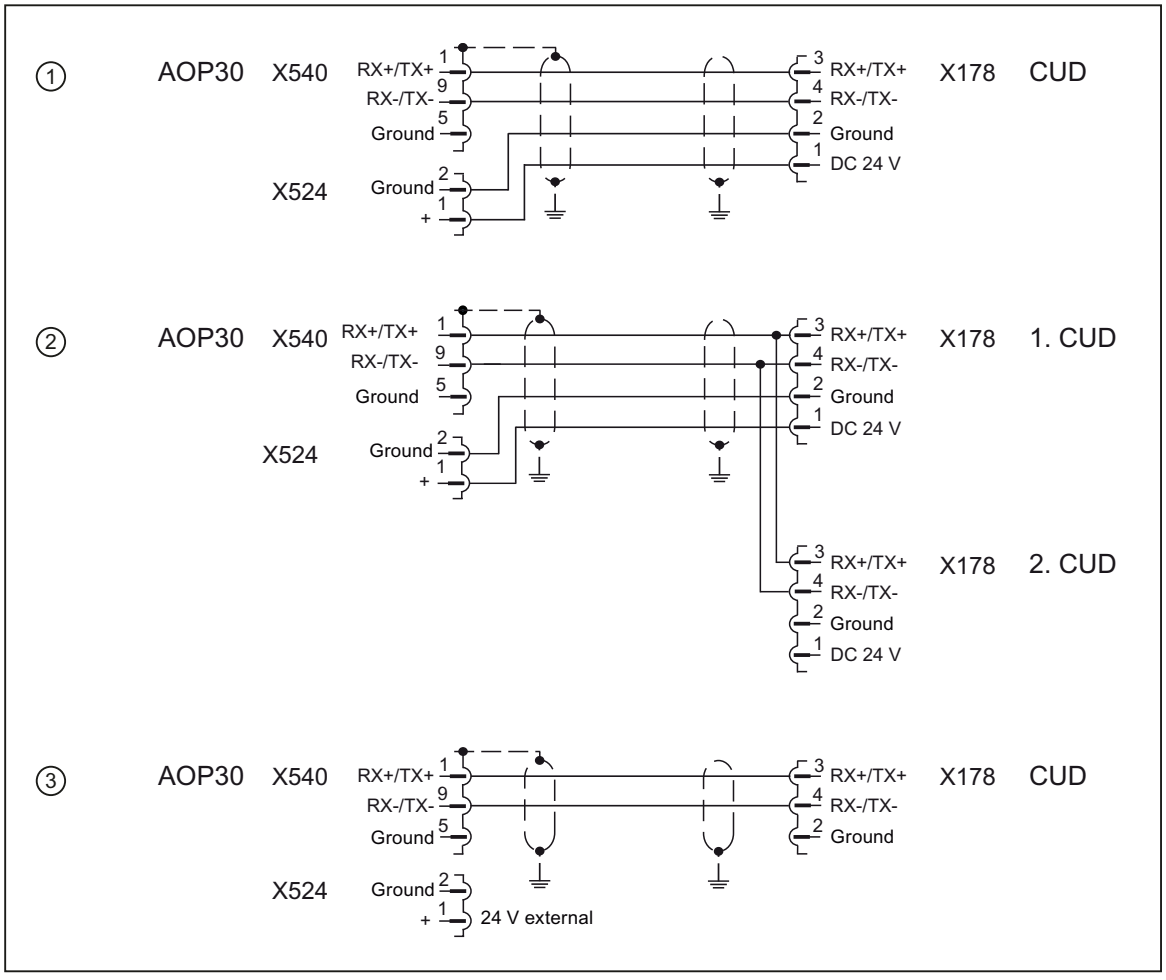

① RS485 cable with 24 V DC power supply from the CUD - max. 50 m
② RS485 cable when operating with 2 CUDs, 24 V DC power supply from one CUD - max. 50 m
③ RS485 cable when supplying the AOP30 from an external 24 V DC source - max. 200 m

X524 Plug terminals
X540 9-pin Sub-D socket
X178 Plug terminals

Figure 6-50 Assignment, RS485 cable

6.16.11 Terminal assignment functional safety

Table 6-40 Terminal type functional safety

X200, X201:	
Type	PUSH IN connecting terminal LMF 5.08
Clamping range	min. 0.12 - 2.5 mm² / AWG 26 - AWG 12
Connection capacity	Rigid/flexible/conductor sizes (mm²/AWG): 0.2 - 2.5 / 26 - 12, with ferrule: 0.25 ... 2.5 mm²
Stripped length	10 mm
Connection system	PUSH IN screwdriver blade 0.6 x 3.5 mm according to DIN 5264 standard

Table 6-41 Assignment of customer terminals on Allocation Board (overview)

Terminal	**Function / Labeling**	**Technical specifications**
X200-1	P24	Output 20 to 26 V, short-circuit proof can be continuously loaded up to 30 mA Used for supplying X200-2, if STO is not used.
X200-2	STO	Input (both terminals are connected) H signal (no STO): +15 V to +30 V, input current 2 mA (typical) L signal (STO): -30 V to +5 V or terminal open; Leakage current maximum 0.5 mA Maximum cable length: 30 m The input must be fed from an SELV-/PELV power supply with a maximum output voltage of 60 V DC. Test pulses are not permitted.
X200-3	STO	
X201-1	RM2	Feedback signal contact "STO active" for a safety relay The contact is closed if STO is active. Rated voltage 24 V, maximum current load 200 mA, leakage current maximum 0.5 mA. Connected to a diagnostic circuit of a safety relay, supplied from an SELV-/PELV power supply with a maximum output voltage of 60 V DC.
X201-2	RM1	
"Allocation Board" module		

Note

The maximum cable length that can be connected is 30 m.

Additional system components

7

Note

The components described here are used in several units in the SINAMICS family. The next chapter may, therefore, contain references to manuals for these units.

The SINAMICS DCM supports the following components from the SINAMICS drive system:

CBE20	Communication Board Ethernet
SMC10, SMC30	Sensor Module Cabinet-Mounted
TM15	Terminal Module
TM31	Terminal Module
TM150	Terminal Module

In order to operate the SINAMICS DCM with these components, it must be equipped with Advanced CUD(s); (see the list of options in Chapter "Ordering information for options and accessories (Page 32)").

The CBE20 Communication Board can be ordered as an option for the SINAMICS DCM and is installed directly in the unit in the OMI slot (Option Module Interface) of the CUD.

The SMC10, SMC30, TM15, TM31 and TM150 modules are installed separately and connected to the SINAMICS DCM via the DRIVE-CLiQ interface.

Note

The modules SMC10, SMC30, TM15, TM31 and TM150 must not be connected with the DRIVE-CLiQ hubs DME20 and DMC20 during operation with SINAMICS DCM.

DRIVE-CLiQ interface

Up to three Terminal Modules TM15/TM31/TM150 can be connected to the DRIVE-CLiQ at the SINAMICS DCM in any desired combination. One Sensor Module Cabinet-Mounted SMC10 or SMC30 can also be connected.

The CUD features two DRIVE-CLiQ ports (X100, X101). Any combination of the modules can be connected in series or in parallel. The Sensor Modules SMC10 or SMC30 only have one DRIVE-CLiQ interface and are therefore always the last module on the bus.

7.1 Option Board: CBE20 Communication Board Ethernet

7.1.1 Description

The SINAMICS DCM can be connected to PROFINET using the CBE20 Communication Board Ethernet interface module. The module supports PROFINET IO with Isochronous Realtime Ethernet (IRT) and PROFINET IO with RT. Mixed operation is not permissible. PROFINET CBA is not supported.

The option board has an X1400 interface with 4 ports for communication.

The CBE20 Communication Board Ethernet also allows SINAMICS link connections to be established, connection to EtherNet/IP and to Modbus TCP.

SINAMICS Link allows data to be directly exchanged between up to 64 CU320-2 PN or CU320-2 DP Control Units or CUD, see Chapter "Communication via SINAMICS Link (Page 484)".

For further information on EtherNet/IP, see Chapter "Communication via EtherNet/IP (EIP) (Page 496)".

For further information on Modbus TCP, see Chapter "Communication via MODBUS TCP (Page 517)".

7.1.2 Safety instructions

NOTICE
Damage or malfunctions of the Option Board by inserting and withdrawing during operation Withdrawing and inserting the Option Board during operation can damage it or cause it to malfunction. • Only withdraw or insert the Option Board when the Control Unit is de-energized.

NOTICE
Qualified personnel The CBE20 must only be operated by qualified personnel. The ESD information must be observed.

7.1.3 Interface description

7.1.3.1 Overview

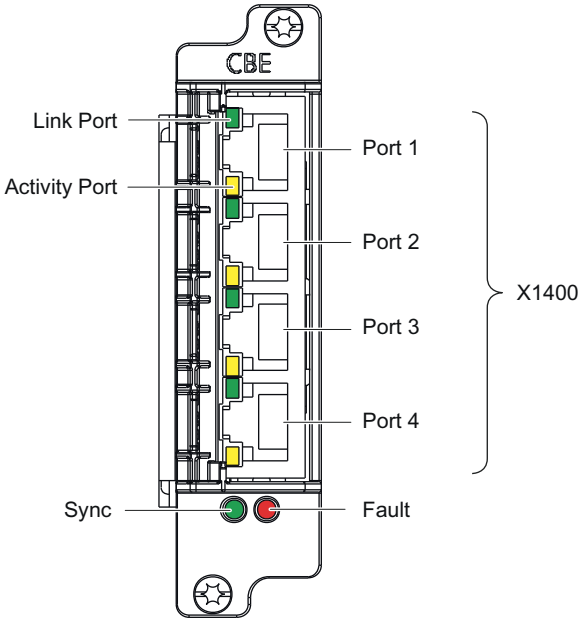

Figure 7-1 Interface description CBE20

MAC address

The MAC address of the Ethernet interface is located on the upper side of the board.

7.1.3.2 X1400 Ethernet interface

Table 7-1 X1400 Ethernet, ports 1-4

Connector	Pin	Signal name	Technical specifications
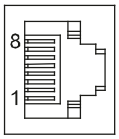	1	RXP	Receive data +
	2	RXN	Receive data -
	3	TXP	Transmit data +
	4	Reserved, do not use	
	5	Reserved, do not use	
	6	TXN	Transmit data -
	7	Reserved, do not use	
	8	Reserved, do not use	
	Screened backshell	M_EXT	Screen, permanently connected
Connector type: RJ45 socket			

For diagnostic purposes, the ports have one green and one yellow LED.

Cable and connector types

Cable type: Industrial Ethernet
Max. cable length: 100 m

Information on PROFINET cables and connectors can be found in the following catalog:

Industrial Communication
Catalog IK PI, 2015 Edition

7.1.4 Meaning of the LEDs

Table 7-2 Meaning of the LEDs at ports 1 to 4 of the X1400 interface

LED	Color	Status	Description
Link port	-	Off	Electronics power supply is missing or outside permissible tolerance range (link missing or defective).
	Green	Continuous light	A different device is connected to port x and a physical connection exists.
Activity port	-	Off	Electronics power supply is missing or outside permissible tolerance range (no activity).
	Yellow	Flashing light	Data is being received or sent at port x.

Table 7-3 Meaning of the Sync and Fault LEDs on the CBE20

LED	Color	Status	Description
Fault	–	Off	If the link port LED is green: The CBE20 is operating normally, data is being exchanged with the configured IO Controller.
	Red	Flashing light	• The response monitoring interval has elapsed. • Communications is interrupted. • The IP address is incorrect. • Incorrect or no configuration. • Incorrect parameter settings. • Incorrect or missing device name. • IO Controller not connected/switched off, although an Ethernet connection has been established. • Other CBE20 errors
		Continuous light	CBE20 bus error • No physical connection to a subnet/switch. • Incorrect transmission rate • Full duplex transmission is not activated.

LED	Color	Status	Description
Sync	–	Off	If the link port LED is green: Control Unit task system is not synchronized with the IRT clock. An internal substitute clock is generated.
	Green	Flashing light	Control Unit task system has synchronized with the IRT clock and data is being exchanged.
		Continuous light	Task system and MC-PLL have synchronized with the IRT clock.

Table 7-4 Meaning of the OPT LED on the Control Unit

LED	Color	Status	Description, cause	Remedy
OPT	–	OFF	Electronics power supply is missing or outside permissible tolerance range. CBE20 is either defective or not inserted.	–
	Green	Continuous light	CBE20 is ready and cyclic communication is taking place.	–
		Flashing light 0.5 Hz	CBE20 is ready but cyclic communication is not running. Possible causes: • Communication is being established. • At least one fault is present.	–
	Red	Continuous light	Cyclic communication via PROFINET has not yet been established. However, non-cyclic communication is possible. SINAMICS is waiting for a parameterization/configuration telegram.	–
		Flashing light 0.5 Hz	The firmware update into the CBE20 has been completed with an error. Possible causes: • The memory card for the Control Unit is defective. • The CBE20 is defective. In this state CBE20 cannot be used.	–
		Flashing light 2 Hz	There is a communications error between the Control Unit and the CBE20. Possible causes: • The CBE20 was withdrawn after booting. • The CBE20 is defective.	Correctly insert the board, if required, replace.
	Orange	Flashing light 0.5 Hz	Firmware of the CBE20 currently being updated.	–

7.1.5 Installation

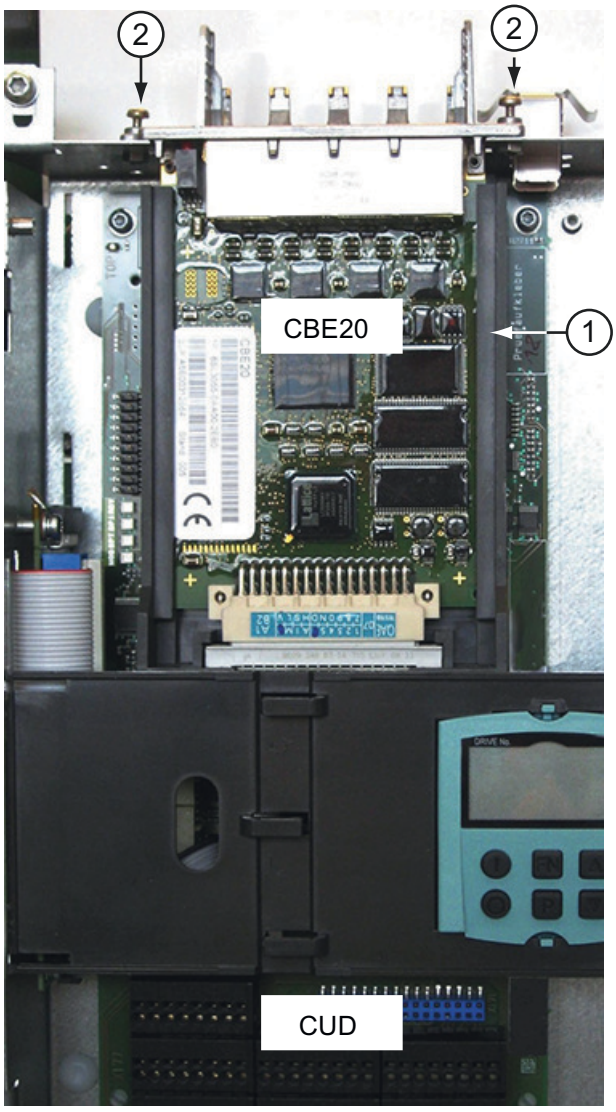

Installing the CBE20

Push the CBE20 into the option module interface ① on the CUD from above, and tighten the screws ②.

Tool: Torx T10 screwdriver

Tightening torque: 1 Nm

7.1.6 Technical data

Table 7-5 Technical data

Communication Board CBE20 6SL3055-0AA00-2EBx	**Unit**	**Value**
Max. current requirements (at 24 V DC)	A_{DC}	0.1
Power loss	W	2.4
Weight	kg	< 0.1

7.2 Sensor Module Cabinet-Mounted SMC10

7.2.1 Description

The Sensor Module Cabinet-Mounted SMC10 is an expansion module for snapping onto a mounting rail acc. to IEC 60715. It evaluates encoder signals and transmits the speed, actual position value and the rotor position via DRIVE-CLiQ to the Control Unit.

The SMC10 is used to evaluate sensor signals from resolvers.

7.2.2 Safety instructions

⚠ WARNING

Non-observance of the safety instructions

If the safety instructions in Chapter 1 are not observed, accidents can occur involving severe injuries or death.

- Make sure that the safety instructions are observed.

⚠ WARNING

Fire through overheating due to insufficient ventilation clearances

Inadequate ventilation clearances cause overheating with a risk for personnel due to smoke and fire. This can also result in increased failures and reduced service life of the Sensor Module Cabinet-Mounted.

- For this reason, it is imperative that you maintain the 50 mm clearances above and below the Sensor Module Cabinet-Mounted.

Note

Encoder failures due to encoder signal disturbances

Unfavorable material combinations generate static electricity between the belt pulley and the belt. This electrostatic charge (several kV) can discharge via the motor shaft and the encoder which leads to disturbance of the encoder signals (encoder error).

- Use an antistatic version of the belt (special conductive polyurethane mixture).



⚠ WARNING

Electric shock when disconnecting and connecting encoder cables during operation

When disconnecting plug-in connections during operation, arcs can result in severe injury or death.

- Only disconnect or connect the encoder cables to Siemens motors in a voltage-free state if hot-plugging has not been specifically released. When using direct measuring systems (third-party encoders), ask the manufacturer whether hot-plugging is permitted.

Note

Reduced interference immunity through equalization currents via the electronic ground

Make sure there is no electrical connection between the encoder system housing and the signal lines and the sensor system electronics.

If this is not carefully observed, under certain circumstances the system will not be able to reach the required interference immunity level (there is then a danger of equalization currents flowing through the electronics ground).

NOTICE

Damage through the use of incorrect DRIVE-CLiQ cables

Damage or malfunctions can occur on the devices or system when incorrect or unreleased DRIVE-CLiQ cables are used.

- Only use suitable DRIVE-CLiQ cables that have been released by Siemens for the respective application.

Note

Malfunctions due to polluted DRIVE-CLiQ interfaces

Malfunctions can occur in the system through the use of polluted DRIVE-CLiQ interfaces.

- Cover unused DRIVE-CLiQ interfaces with the supplied blanking covers.

Note

The safety instructions on the Sensor Module must be observed.

After the product has reached the end of its service life, the individual parts should be disposed of in compliance with local regulations.

7.2.3 Interface description

7.2.3.1 Overview

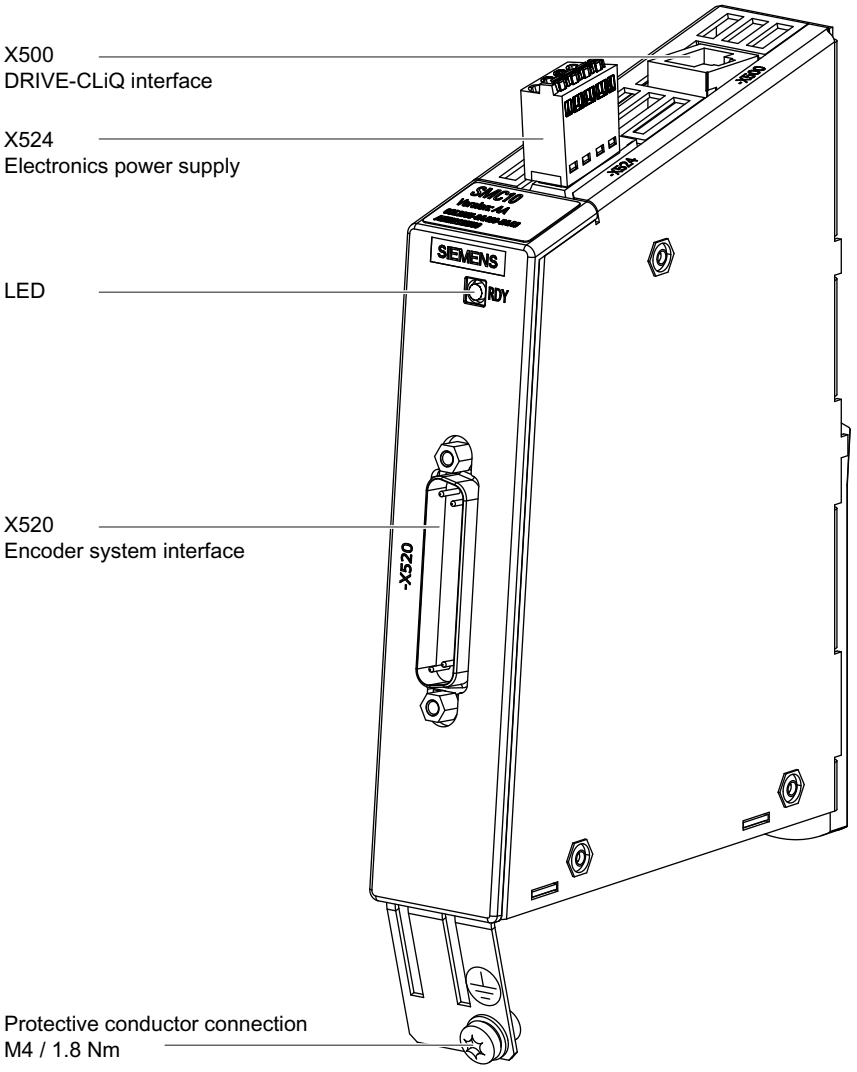

Figure 7-2 Interface overview for the SMC10

Terminal type

X524		
Terminal type	Spring-loaded terminal	
Connectable cable cross-sections	Rigid, flexible Flexible with conductor end sleeve without plastic sleeve Flexible with conductor end sleeve with plastic sleeve AWG / kcmil	0.2 ... 2.5 mm^2 0.25 ... 2.5 mm^2 0.25 ... 1.5 mm^2 24 ... 12
Stripped length	8 mm	

7.2.3.2 X500 DRIVE-CLiQ interface

Table 7-6 X500: DRIVE-CLiQ interface

Connector	Pin	Signal name	Technical specifications
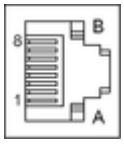	1	TXP	Transmit data +
	2	TXN	Transmit data -
	3	RXP	Receive data +
	4	Reserved, do not use	
	5	Reserved, do not use	
	6	RXN	Receive data -
	7	Reserved, do not use	
	8	Reserved, do not use	
	A	Reserved, do not use	
	B	M (0 V)	Electronics ground
Connector type: DRIVE-CLiQ socket			

The blanking cover for the DRIVE-CLiQ port is included in the scope of delivery.
Blanking covers (50 x) Article No.: 6SL3066-4CA00-0AA0

7.2.3.3 X524 Electronics power supply

Table 7-7 X524: Electronics power supply

Connector	Terminal	Designation	Technical specifications
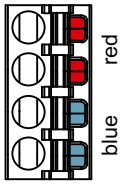	+	Electronics power supply	Voltage: 24 V DC (20.4 ... 28.8 V) Current consumption: Max. 0.35 A Max. current via jumper in connector: 20 A (15 A according to UL/CSA)
	+	Electronics power supply	
	M	Electronics ground	
	M	Electronics ground	
Type: Spring-loaded terminal Connectable conductor cross-section: rigid, flexible 0.2 ... 2.5 mm^2 Stripped length: 8 mm			

The maximum cable length that can be connected is 30 m.

Note

The two "+" or "M" terminals are jumpered in the connector. This ensures that the supply voltage is looped through.

7.2.3.4 X520 Encoder system interface

Table 7-8 X520: Encoder system interface

Connector	Pin	Signal name	Technical specifications
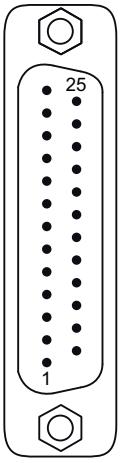	1	Reserved, do not use	
	2	Reserved, do not use	
	3	S2	Resolver signal A (sin+)
	4	S4	Inverted resolver signal A (sin-)
	5	Ground	Ground (for internal shield)
	6	S1	Resolver signal B (cos+)
	7	S3	Inverted resolver signal B (cos-)
	8	Ground	Ground (for internal shield)
	9	R1	Resolver excitation positive
	10	Reserved, do not use	
	11	R2	Resolver excitation negative
	12	Reserved, do not use	
	13	-	
	14	Reserved, do not use	
	15	Reserved, do not use	
	16	Reserved, do not use	
	17	Reserved, do not use	
	18	Reserved, do not use	
	19	Reserved, do not use	
	20	Reserved, do not use	
	21	Reserved, do not use	
	22	Reserved, do not use	
	23	Reserved, do not use	
	24	Ground	Ground (for internal shield)
	25	-	
Connector type: 25-pin SUB D connector			

7.2.4 Connection example

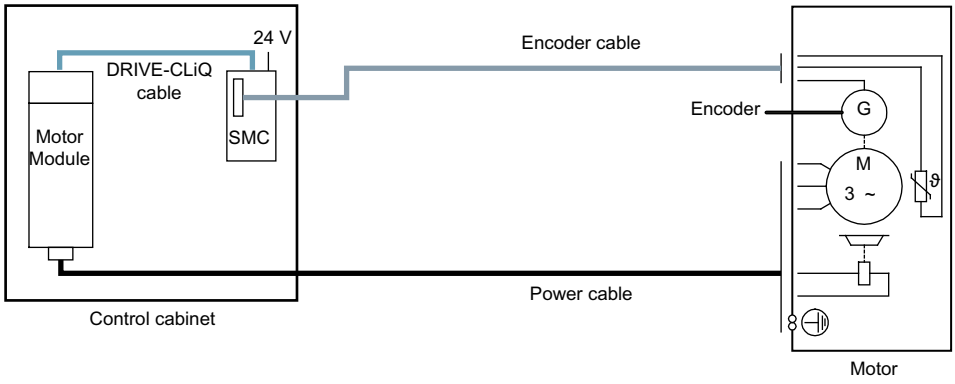

Figure 7-3 Connecting the encoder via a Sensor Module Cabinet-Mounted (SMC)

7.2.5 Meaning of the LED

Table 7-9 Meaning of the LED on the Sensor Module Cabinet-Mounted SMC10

LED	Color	Status	Description, cause	Remedy
RDY READY	-	Off	The electronics power supply is missing or outside the permissible tolerance range.	–
	Green	Continuous light	The component is ready for operation. Cyclic DRIVE-CLiQ communication is taking place.	–
	Orange	Continuous light	DRIVE-CLiQ communication is being established.	–
	Red	Continuous light	This component has at least one fault. **Note:** The LED is activated irrespective of whether the corresponding messages have been reconfigured.	Remove and acknowledge the fault.
	Green/red	Flashing light 0.5 Hz	Firmware is being downloaded.	–
		Flashing light 2 Hz	Firmware download has been completed. The system waits for POWER ON.	Carry out a POWER ON.
	Green/ orange or red/ orange	Flashing light 2 Hz	Component recognition via LED is activated[1)]. **Note:** Both options depend on the LED status when component recognition is activated.	–

[1)] Parameters for activating the identification of components via LED are 1.p9210 and 1.p9211 (see DCM List Manual)

Cause and rectification of faults

Additional information about the cause and how to resolve faults can be found here:

- SINAMICS DCM List Manual
- Chapter "Commissioning with the Starter commissioning tool"

7.2.6 Dimension drawing

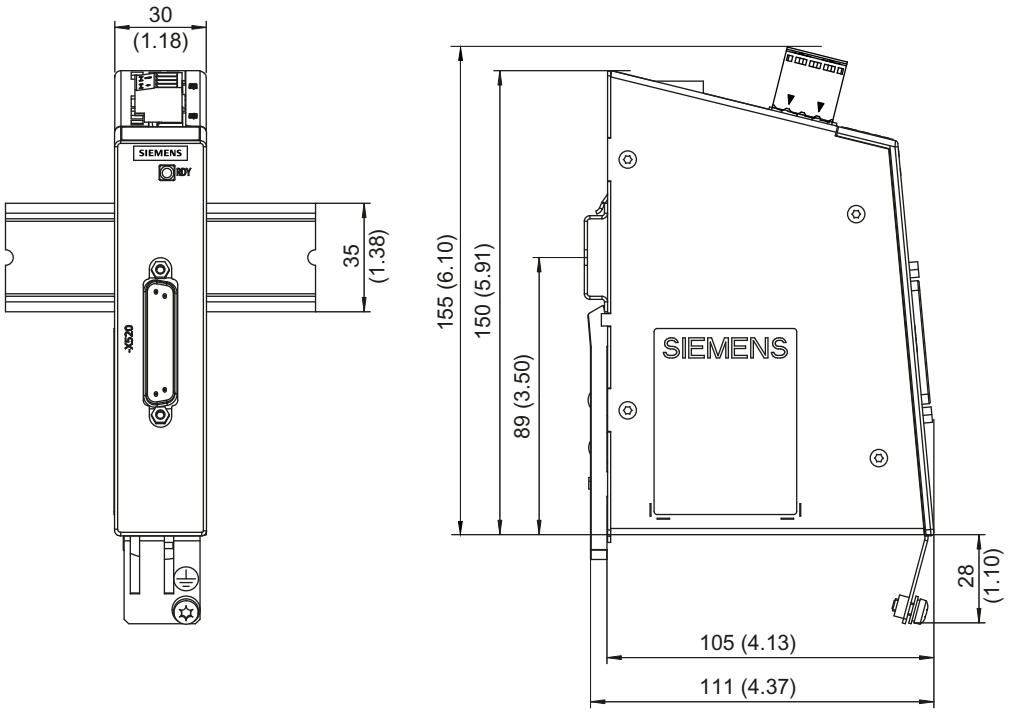

Figure 7-4 Dimension drawing of the Sensor Module Cabinet SMC10, all dimensions in mm and (inches)

7.2.7 Installation

Installation

1. Tilt the component backwards slightly and attach it to the mounting rail using the hooks.
2. Swivel the component onto the mounting rail until you hear the mounting slide at the rear latch into position.
3. Slide the components along the mounting rail to either the left or right up to their final position.

Removal

1. First shift the mounting slide downwards at the lug to release the interlocking with the mounting rail.
2. Swivel the component to the front and withdraw it upwards from the mounting rail.

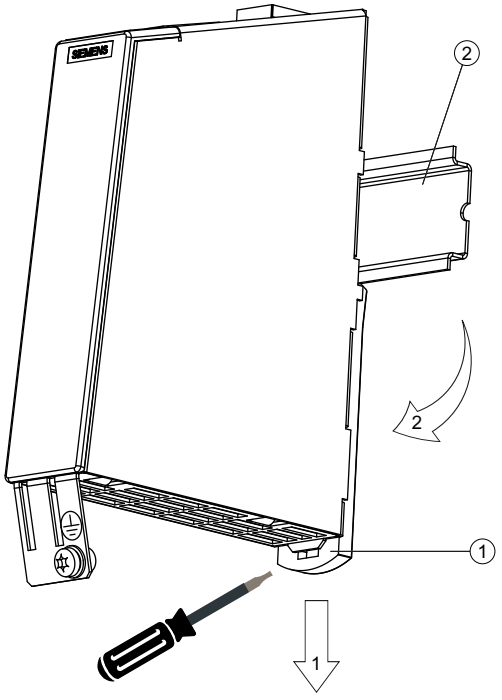

① Mounting slide
② Mounting rail

Figure 7-5 Removing from a mounting rail

7.2.8 Technical data

Table 7-10 Technical data

6SL3055-0AA00-5AAx	Unit	Value
Electronics power supply		
Voltage	V_{DC}	24 (20.4 ... 28.8)
Current (without encoder system)	A_{DC}	≤ 0.20
Power loss	W	≤ 4
Max. Cable length	m	30
Specification		
Transformation ratio of the resolver (ü)		0.5
Excitation voltage on the SMC10 when ü=0.5	V_{rms}	4.1
Amplitude monitoring threshold (secondary tracks) of the SMC10	V_{rms}	0.76
Excitation voltage (cannot be parameterized)	V_{rms}	4.1
Excitation frequency (synchronized to the current controller clock cycle)	kHz	5 to 16
Protective conductor connection	At the housing with M4/1.8 Nm screw	
Max. encoder cable length	m	130
Weight	kg	0.45

Table 7-11 Max. frequency that can be evaluated (speed)

Resolver		Max. speed resolver / motor		
Number of poles	**Number of pole pairs**	**8 kHz / 125 µs**	**4 kHz / 250 µs**	**2 kHz / 500 µs**
2-pole	1	120000 rpm	60000 rpm	30000 rpm
4-pole	2	60000 rpm	30000 rpm	15000 rpm
6-pole	3	40000 rpm	20000 rpm	10000 rpm
8-pole	4	30000 rpm	15000 rpm	7500 rpm

The ratio between the ohmic resistance R and the inductance L (the primary winding of the resolver) determines whether the resolver can be evaluated with the SMC10. See the figure below:

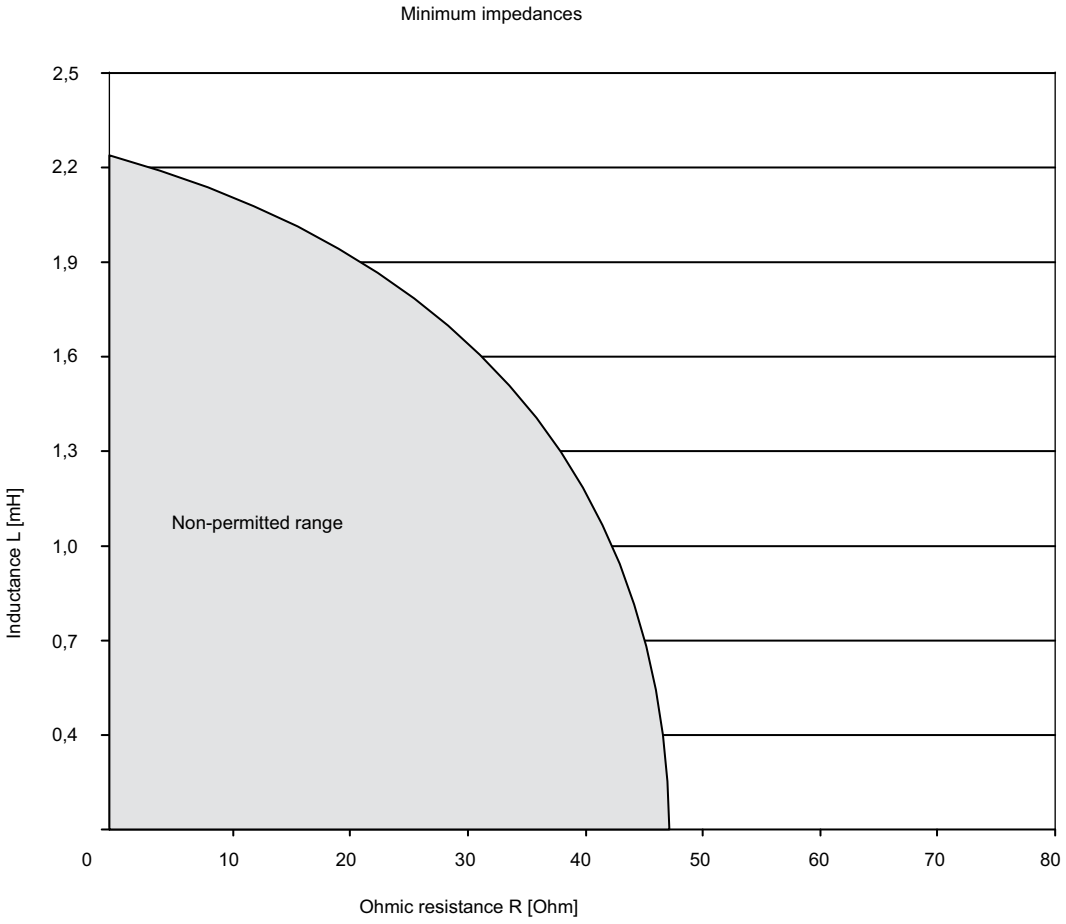

Figure 7-6 Rotor impedances that can be connected with excitation frequency f = 5000 Hz

To check as shown in the previous figure, the impedances Z_{rs} or Z_{ro} (impedance between R1 and R2 with short-circuited or open outputs) from the encoder manufacturer's data sheet must be used.

7.3 Sensor Module Cabinet-Mounted SMC30

Supported types

The SINAMICS DCM only supports the Sensor Module Cabinet-Mounted SMC30 with article number 6SL3055-0AA00-5CA2. Other types may not be used. You can easily identify whether the version is supported by the width of the module:

Table 7-12 SMC30 types

SMC30 article number	Width	Use with SINAMICS DCM
6SL3055-0AA00-5CA2	30 mm	Possible
6SL3055-0AA00-5CA0	50 mm	Not possible
6SL3055-0AA00-5CA1	50 mm	Not possible

Number of SMC30s connected

The SINAMICS DCM supports the connection of **one** Sensor Module Cabinet-Mounted SMC30.

7.3.1 Description

The Sensor Module Cabinet-Mounted SMC30 evaluates encoder signals and transfers the speed, actual position value, and, if necessary, the motor temperature and reference point via DRIVE-CLiQ to the Control Unit.

The SMC30 is used to evaluate encoder signals from encoders with TTL, HTL or SSI interfaces.

A combination of a TTL/HTL signal and SSI absolute signal is possible at terminals X521/X531, if both signals are derived from the same measured variable.

7.3.2 Safety instructions

⚠ WARNING

Non-observance of the safety instructions

If the safety instructions in Chapter 1 are not observed, accidents can occur involving severe injuries or death.

- Make sure that the safety instructions are observed.

⚠ WARNING

Fire through overheating due to insufficient ventilation clearances

Inadequate ventilation clearances cause overheating with a risk for personnel due to smoke and fire. This can also result in increased failures and reduced service life of the Sensor Module Cabinet-Mounted.

- For this reason, it is imperative that you maintain the 50 mm clearances above and below the Sensor Module Cabinet-Mounted.

NOTICE

Shield support

When the encoder system is connected via terminals, make sure that the cable shield is connected to the component.

Note

Encoder failures due to encoder signal disturbances

Unfavorable material combinations generate static electricity between the belt pulley and the belt. This electrostatic charge (several kV) can discharge via the motor shaft and the encoder which leads to disturbance of the encoder signals (encoder error).

- Use an antistatic version of the belt (special conductive polyurethane mixture).



⚠ WARNING

Electric shock when disconnecting and connecting encoder cables during operation

When disconnecting plug-in connections during operation, arcs can result in severe injury or death.

- Only disconnect or connect the encoder cables to Siemens motors in a voltage-free state if hot-plugging has not been specifically released. When using direct measuring systems (third-party encoders), ask the manufacturer whether hot-plugging is permitted.

NOTICE

Damage when connecting an impermissible number of encoder systems

Damage results when more than the maximum permissible number of encoder systems are connected to a Sensor Module.

- Only connect one encoder system to a Sensor Module.

Note

Reduced interference immunity through equalization currents via the electronic ground

Make sure there is no electrical connection between the encoder system housing and the signal lines and the sensor system electronics.

If this is not carefully observed, under certain circumstances the system will not be able to reach the required interference immunity level (there is then a danger of equalization currents flowing through the electronics ground).

NOTICE

Damage through the use of incorrect DRIVE-CLiQ cables

Damage or malfunctions can occur on the devices or system when incorrect or unreleased DRIVE-CLiQ cables are used.

- Only use suitable DRIVE-CLiQ cables that have been released by Siemens for the respective application.

Note

Malfunctions due to polluted DRIVE-CLiQ interfaces

Malfunctions can occur in the system through the use of polluted DRIVE-CLiQ interfaces.

- Cover unused DRIVE-CLiQ interfaces with the supplied blanking covers.

Note

The safety instructions on the Sensor Module must be observed.

After the product has reached the end of its service life, the individual parts should be disposed of in compliance with local regulations.

7.3.3 Interface description

7.3.3.1 Overview

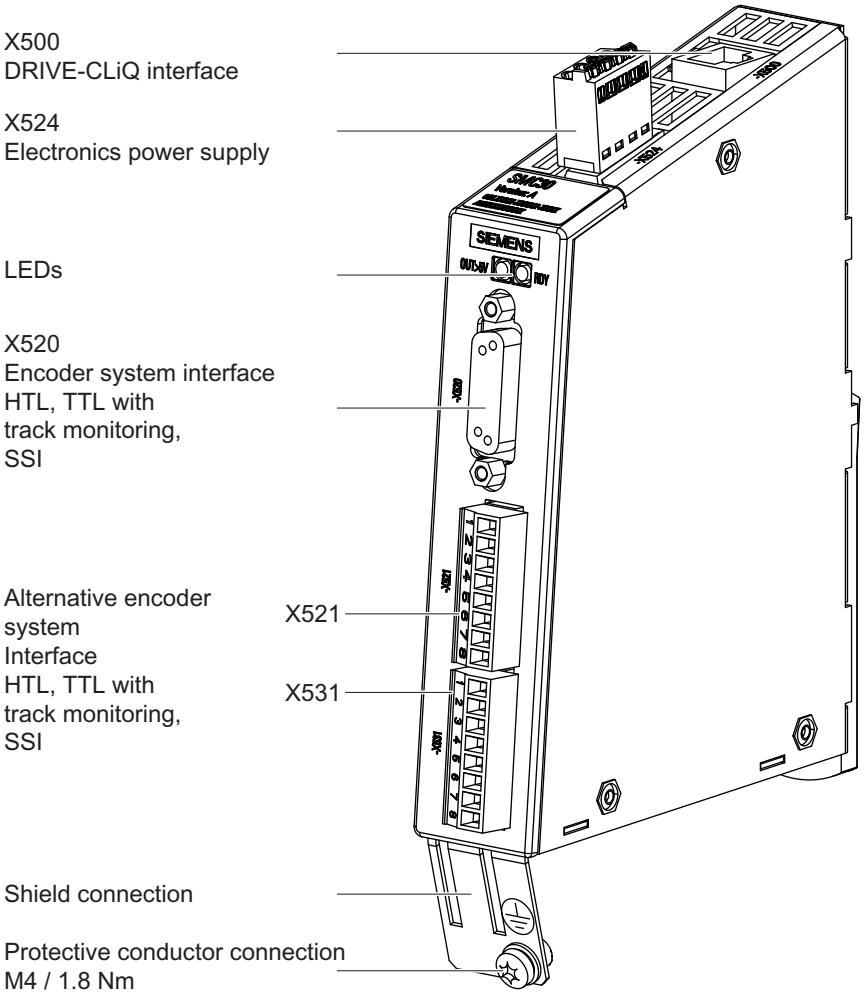

Figure 7-7 SMC30 interface description

Terminal type

X521, X531		
Terminal type	Screw terminal	
Connectable cable cross-sections	Rigid, flexible Flexible with conductor end sleeve without plastic sleeve Flexible with conductor end sleeve with plastic sleeve AWG / kcmil	0.08 ... 1.5 mm² 0.25 ... 1.5 mm² 0.25 ... 0.5 mm² 28 ... 14
Stripped length	7 mm	
Tool	0.4 × 2.0 mm screwdriver	
Tightening torque	0.22 ... 0.25 Nm	

X524		
Terminal type	Spring-loaded terminal	
Connectable cable cross-sections	Rigid, flexible Flexible with conductor end sleeve without plastic sleeve Flexible with conductor end sleeve with plastic sleeve AWG / kcmil	0.2 ... 2.5 mm^2 0.25 ... 2.5 mm^2 0.25 ... 1.5 mm^2 24 ... 12
Stripped length	8 mm	

7.3.3.2 X500 DRIVE-CLiQ interface

Table 7-13 X500: DRIVE-CLiQ interface

Connector	Pin	Signal name	Technical specifications
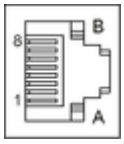	1	TXP	Transmit data +
	2	TXN	Transmit data -
	3	RXP	Receive data +
	4	Reserved, do not use	
	5	Reserved, do not use	
	6	RXN	Receive data -
	7	Reserved, do not use	
	8	Reserved, do not use	
	A	Reserved, do not use	
	B	M (0 V)	Electronics ground
Connector type: DRIVE-CLiQ socket			

The blanking cover for the DRIVE-CLiQ port is included in the scope of delivery.
Blanking covers (50 x) Article No.: 6SL3066-4CA00-0AA0

7.3.3.3 X524 Electronics power supply

Table 7-14 X524: Electronics power supply

Connector	Terminal	Designation	Technical specifications
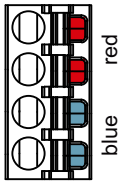	+	Electronics power supply	Voltage: 24 V DC (20.4 ... 28.8 V) Current consumption: Max. 0.55 A Max. current via jumper in connector: 20 A (15 A according to UL/CSA)
	+	Electronics power supply	
	M	Electronics ground	
	M	Electronics ground	
Type: Spring-loaded terminal Connectable conductor cross-section: rigid, flexible 0.2 ... 2.5 mm^2 Stripped length: 8 mm			

The maximum cable length that can be connected is 30 m.

Note

The two "+" or "M" terminals are jumpered in the connector. This ensures that the supply voltage is looped through.

7.3.3.4 X520 Encoder system interface

Table 7-15 X520: Encoder system interface

Connector	Pin	Signal name	Technical specifications
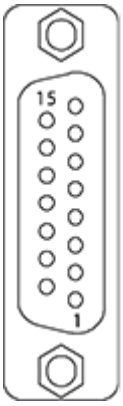	1	Reserved, do not use	
	2	Clock	SSI clock
	3	Clock*	Inverse SSI clock
	4	P encoder 5 V/24 V	Encoder supply
	5	P encoder 5 V/24 V	
	6	P sense	Sense input, encoder supply
	7	M encoder (M)	Ground encoder power supply
	8	Reserved, do not use	
	9	M sense	Ground for sense input
	10	R	Reference signal R
	11	R*	Inverse reference signal R
	12	B*	Inverse incremental signal B
	13	B	Incremental signal B
	14	A*/data*	Inverted incremental signal A/inverted SSI data
	15	A/data	Incremental signal A/SSI data
Connector type: SUB-D female, 15-pin			

NOTICE

Destruction of the encoder due to an incorrect supply voltage

The encoder supply can be parameterized for 5 V or 24 V. The encoder may be destroyed if you enter the wrong parameters.

- Select the appropriate motor supply voltage.

7.3.3.5 X521/X531 Alternative encoder system interface

Table 7-16 X521/X531 alternative encoder system interface

Connector	Terminal	Designation	Technical specifications
X521 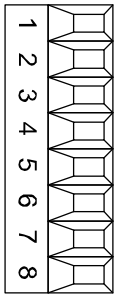 	1	A	Incremental signal A
	2	A*	Inverse incremental signal A
	3	B	Incremental signal B
	4	B*	Inverse incremental signal B
	5	R	Reference signal R
	6	R*	Inverse reference signal R
	7	CTRL	Control signal
	8	M	Ground
X531 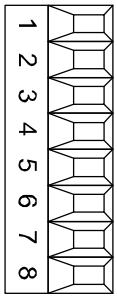 	1	P_encoder 5 V/24 V	Encoder supply
	2	M_Encoder	Ground encoder power supply
	3	- Temp [1]	Temperature sensor PT1000 / KTY84-1C130
	4	+ Temp [1]	Temperature sensor PT1000 / KTY84-1C130
	5	Clock	SSI clock
	6	Clock*	Inverse SSI clock
	7	Data	SSI data
	8	Data*	Inverse SSI data
Max. connectable cross-section: 1.5 mm^2 Measuring current via the temperature sensor connection: 2 mA When unipolar HTL encoders are used, A*, B*, and R* on the terminal block must be jumpered with M_Encoder (X531) [2].			

[1] Accuracy of the temperature measurement (temperature sensor including evaluation)
- PT1000: ±5 °C (PT1000 tolerance class B acc. to IEC 60751)
- KTY: ±7 °C

[2] Because the physical transmission properties are more robust, the bipolar connection should always be used. The unipolar connection should only be used if the encoder type does not output push-pull signals.



⚠ WARNING

Electric shock due to unconnected cable shields

Hazardous touch voltages can occur through capacitive cross-coupling due to unconnected cable shields.

- Attach the cable shield to the component via terminals for the encoder system connection.

Temperature sensor connection

For the evaluation of the temperature sensor, see function diagram 8030 in the SINAMICS DCM List Manual.

NOTICE
Motor damage due to incorrectly connected KTY temperature sensor A KTY temperature sensor connected with incorrect polarity cannot detect if the motor overheats. Overheating may result in damage to the motor. • Connect a KTY temperature sensor with the correct polarity.

⚠ **WARNING**
Electric shock in the event of voltage flashovers on the temperature sensor cable Voltage flashovers in the signal electronics can occur for motors without safe electrical separation of the temperature sensors. • Only use temperature sensors that meet the specifications of safety isolation according to IEC 61800-5-1.

Note

The maximum length of the temperature sensor cable is 100 m. The cables must be shielded.

7.3.4 Connection examples

Connection example 1: HTL encoder with reference signal, bipolar connection

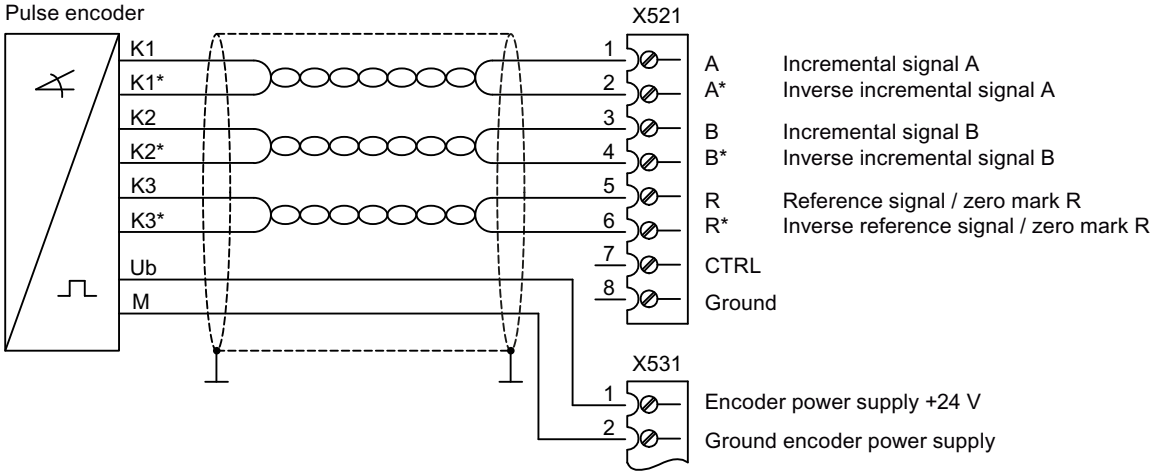

Figure 7-8 Connection example 1: HTL encoder with reference signal, bipolar connection

Signal cables must be twisted in pairs in order to improve immunity against induced interference.

Connection example 2: HTL encoder with reference signal, unipolar connection including the encoder ground

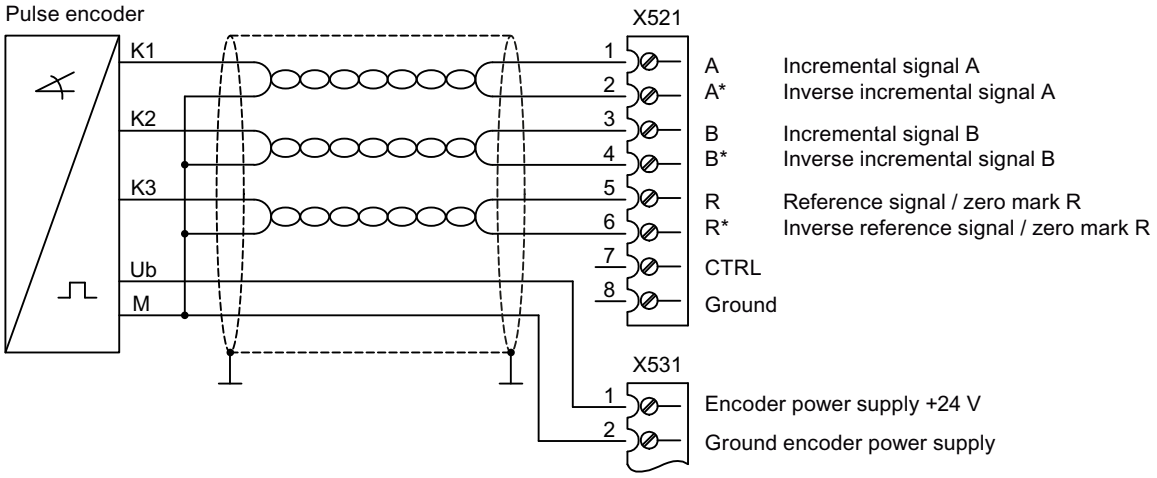

Figure 7-9 Connection example 2: HTL encoder with reference signal, unipolar connection including the encoder ground

Signal cables must be twisted in pairs in order to improve immunity against induced interference.

Connection example 3: HTL encoder with reference signal, unipolar connection without the encoder ground

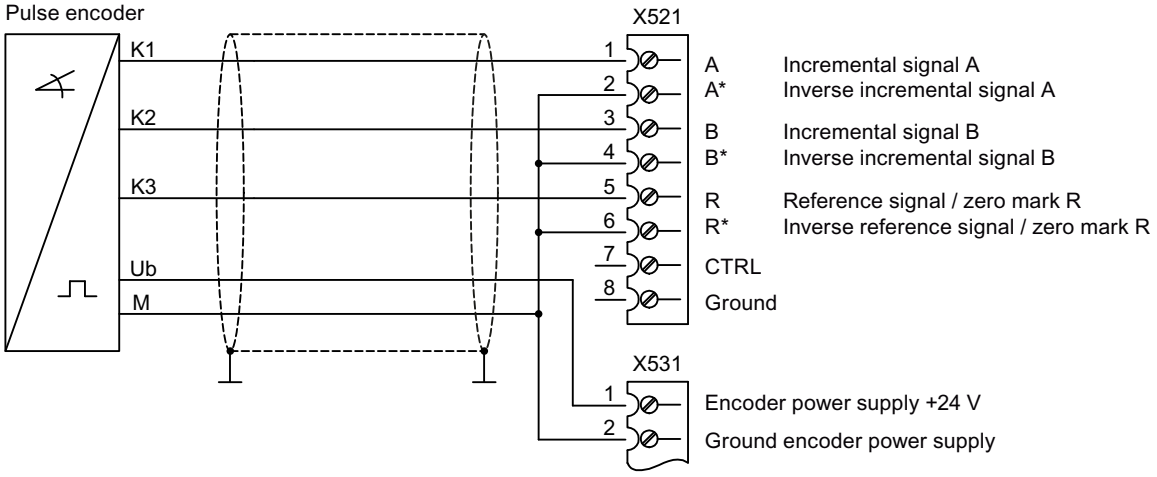

Figure 7-10 Connection example 3: HTL encoder with reference signal, unipolar connection without the encoder ground

7.3.5 Meaning of the LEDs

Table 7-17 Meaning of LEDs on the Sensor Module Cabinet SMC30

LED	Color	Status	Description, cause	Remedy
RDY READY	-	Off	Electronics power supply is missing or outside permissible tolerance range.	–
	Green	Continuous light	The component is ready for operation and cyclic DRIVE-CLiQ communication is taking place.	–
	Orange	Continuous light	DRIVE-CLiQ communication is being established.	–
	Red	Continuous light	At least one fault is present in this component. **Note:** The LED is activated irrespective of whether the corresponding messages have been reconfigured.	Remove and acknowledge the fault.
	Green/red	0.5 Hz flashing light	Firmware is being downloaded.	–
	Green/red	2 Hz flashing light	Firmware download is complete. Wait for POWER ON.	Carry out a POWER ON.
	Green/ orange or red/ orange	2 Hz flashing light	Component recognition via LED is activated (p0144). **Note:** Both options depend on the LED status when module recognition is activated via p0144 = 1.	–
OUT > 5 V	-	Off	Electronics power supply is missing or outside permissible tolerance range. Power supply ≤ 5 V.	–
	Orange	Continuous light	Electronics power supply for encoder system available. Power supply > 5 V. **Important:** Make sure that the connected encoder can be operated with a 24 V power supply. If an encoder that is designed for a 5 V supply is operated with a 24 V supply, this can destroy the encoder electronics.	–

7.3.6 Dimension drawing

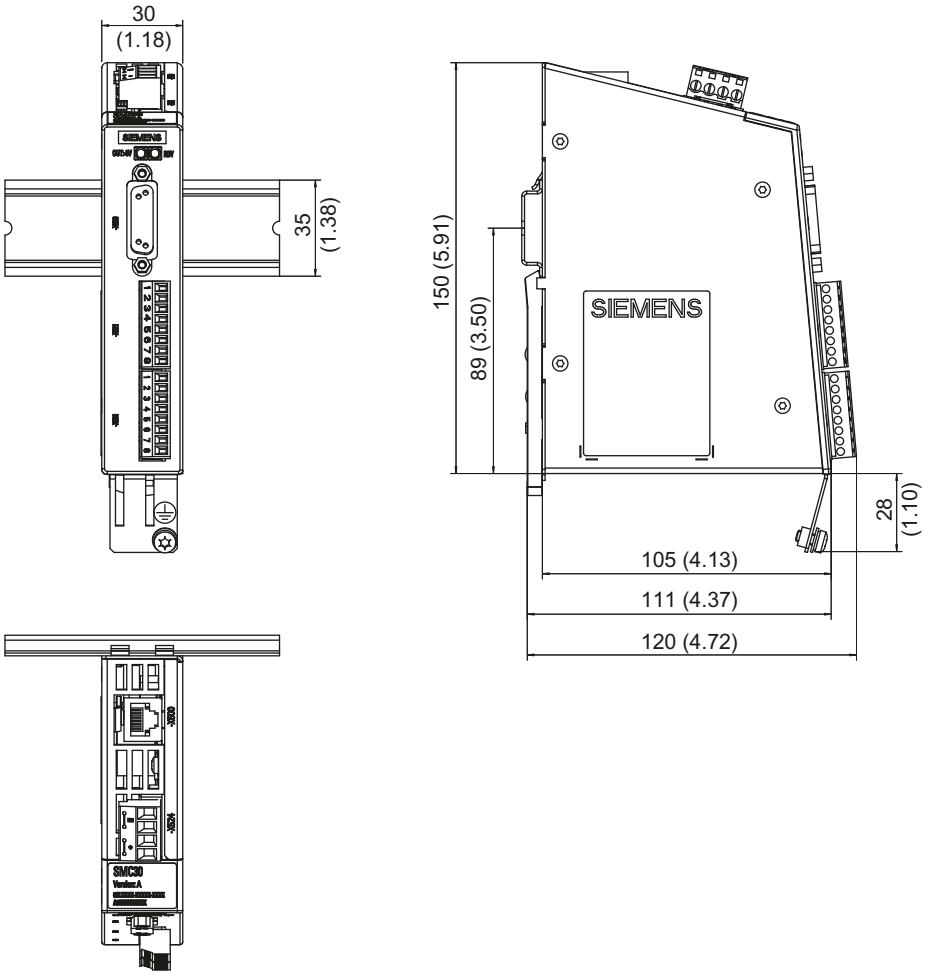

Figure 7-11 Dimension drawing of the Sensor Module Cabinet SMC30, all data in mm and (inches)

7.3.7 Installation

Installation

1. Tilt the component backwards slightly and attach it to the mounting rail using the hooks.
2. Swivel the component onto the mounting rail until you hear the mounting slide at the rear latch into position.
3. Slide the components along the mounting rail to either the left or right up to their final position.

Removal

1. First shift the mounting slide downwards at the lug to release the interlocking with the mounting rail.
2. Swivel the component to the front and withdraw it upwards from the mounting rail.

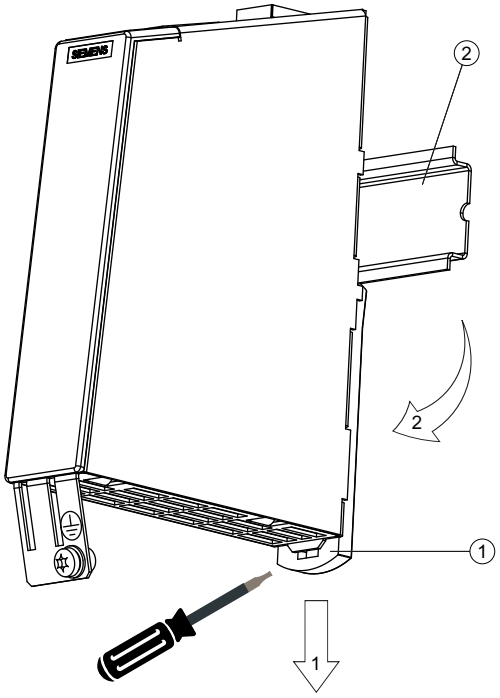

① Mounting slide
② Mounting rail

Figure 7-12 Removing from a mounting rail

7.3.8 Protective conductor connection and shield support

Shield supports are only required if the system is connected to X521/X531.

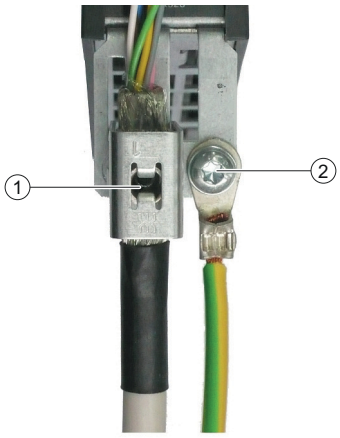

① Shield connection terminal, Weidmüller company, type: KLBUE CO1, Article number: 1753311001

② Protective conductor connection M4 / 1.8 Nm

Figure 7-13 Shield support and protective conductor connection

The bending radii of the cables must be observed (see MOTION-CONNECT description).

NOTICE
Damage or faulty operation due to incorrect shielding or impermissible cable lengths If the correct shielding procedures and the permissible cable lengths are not observed, the machine can be damaged or may malfunction. • Only use shielded cables. • Do not exceed the cable lengths stated in the technical data.

7.3.9 Technical data

Table 7-18 Technical data

6SL3055-0AA00-5CA2	**Unit**	**Value**
Electronics power supply		
Voltage	V_{DC}	24 (20.4 ... 28.8)
Current (without encoder system)	A_{DC}	≤ 0.20
Power loss	W	≤ 4
Max. Cable length	m	30
Encoder system power supply		
Voltage	V_{DC}	5 (with or without remote sense) [1] or V_{DC} - 1 V
Current	A_{DC}	0.35
Encoder frequency that can be evaluated ($f_{encoder}$)	kHz	≤ 500

6SL3055-0AA00-5CA2	Unit	Value
SSI baud rate	kBd	100 - 1000 [2]
Protective conductor connection		At the housing with M4/1.8 Nm screw
Weight		0.41

[1] A controller compares the encoder system supply voltage - sensed via the Remote Sense cables - with the reference supply voltage of the encoder system, and adjusts the supply voltage for the encoder system at the output of the drive module until the required supply voltage is obtained directly at the encoder system (only for 5 V encoder system power supply). Remote Sense only to X520.

[2] See the diagram "Maximum cable lengths depending on the SSI baud rate for SSI encoders"

Connectable encoder systems

Table 7-19 Specification of encoder systems that can be connected

Parameter	Designation	Threshold	Min.	Max.	Unit
High signal level (TTL bipolar at X520 or X521/X531)[1]	U_{Hdiff}		2	5	V
Low signal level (TTL bipolar at X520 or X521/X531)[1]	U_{Ldiff}		-5	-2	V
High signal level (HTL unipolar)	U_H	High	17	V_{CC}	V
		Low	10	V_{CC}	V
Low signal level (HTL unipolar)	U_L	High	0	7	V
		Low	0	2	V
High signal level (HTL bipolar)[2]	U_{Hdiff}		3	V_{CC}	V
Low signal level (HTL bipolar)[2]	U_{Ldiff}		$-V_{CC}$	-3	V
High signal level (SSI bipolar at X520 or X521/X531)[1]	U_{Hdiff}		2	5	V
Low signal level (SSI bipolar at X520 or X521/X531)[1]	U_{Ldiff}		-5	-2	V
Signal frequency	f_S		-	300	kHz
Edge clearance	t_{min}		100	-	ns
"Zero pulse inactive time" (before and after A=B=high)	t_{Lo}		640	$(t_{ALo-BHi} - t_{Hi})/2$ [3]	ns
"Zero pulse active time" (while A=B=high and beyond)[4]	t_{Hi}		640	$t_{ALo-BHi} - 2*t_{Lo}$ [3]	ns

[1] Other signal levels according to the RS422 standard

[2] The absolute level of the individual signals varies between 0 V and VCC of the encoder system.

[3] $t_{ALo-BHi}$ is not a specified value, but is the time between the falling edge of track A and the next but one rising edge of track B.

[4] Additional information on setting the "Zero pulse active time" can be found in the Function Manual: /FH1/ SINAMICS S120, tolerant encoder monitoring for SMC30.

Table 7-20 Connectable encoders

	X520 (SUB-D)	X521 (terminal)	X531 (terminal)	Track monitoring	Remote Sense[2)]
HTL bipolar 24 V	Yes	Yes		Yes	No
HTL unipolar 24 V [1)]	Yes	Yes [1)]		No	No
TTL bipolar 24 V	Yes	Yes		Yes	No
TTL bipolar 5 V	Yes	Yes		Yes	At X520
SSI 24 V/5 V	Yes	Yes		No	No
TTL unipolar	No				

1) Because the physical transmission properties are more robust, the bipolar connection should always be used. The unipolar connection should only be used if the encoder type does not output push-pull signals.

2) A controller compares the encoder system supply voltage - sensed via the Remote Sense cables - with the reference supply voltage of the encoder system, and adjusts the supply voltage for the encoder system at the output of the drive module until the required supply voltage is obtained directly at the encoder system (only for 5 V encoder system power supply).

Maximum encoder cable lengths

Note

The maximum cable lengths according to the following table must not be exceeded even when longer cable lengths can be calculated.

Table 7-21 Maximum encoder cable length

Encoder type	Maximum encoder cable length in m
TTL[1)]	100
HTL unipolar[2)]	100
HTL bipolar	300
SSI	100[3)]

1) For TTL encoders at X520 → Remote Sense → 100 m

2) Because the physical transmission properties are more robust, the bipolar connection should always be used. The unipolar connection should only be used if the encoder type does not output push-pull signals.

2) See diagram "Maximum cable length depending on the SSI baud rate for SSI encoders"

SSI encoders

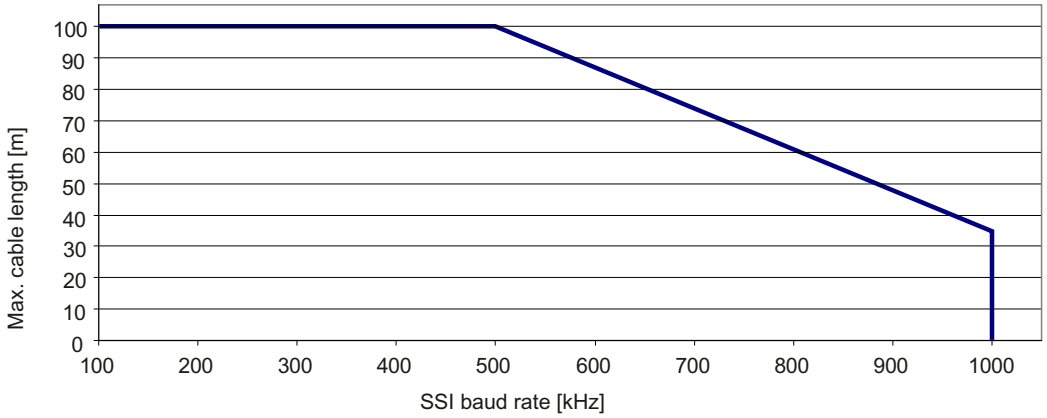

Figure 7-14 Maximum cable lengths depending on the SSI baud rate for SSI encoders

Encoders with 5 V supply connected to X521/X531

For encoders with a 5 V supply at X521 / X531, the cable length [1] depends on the encoder current (applicable for cable cross-sections with 0.5 mm²):

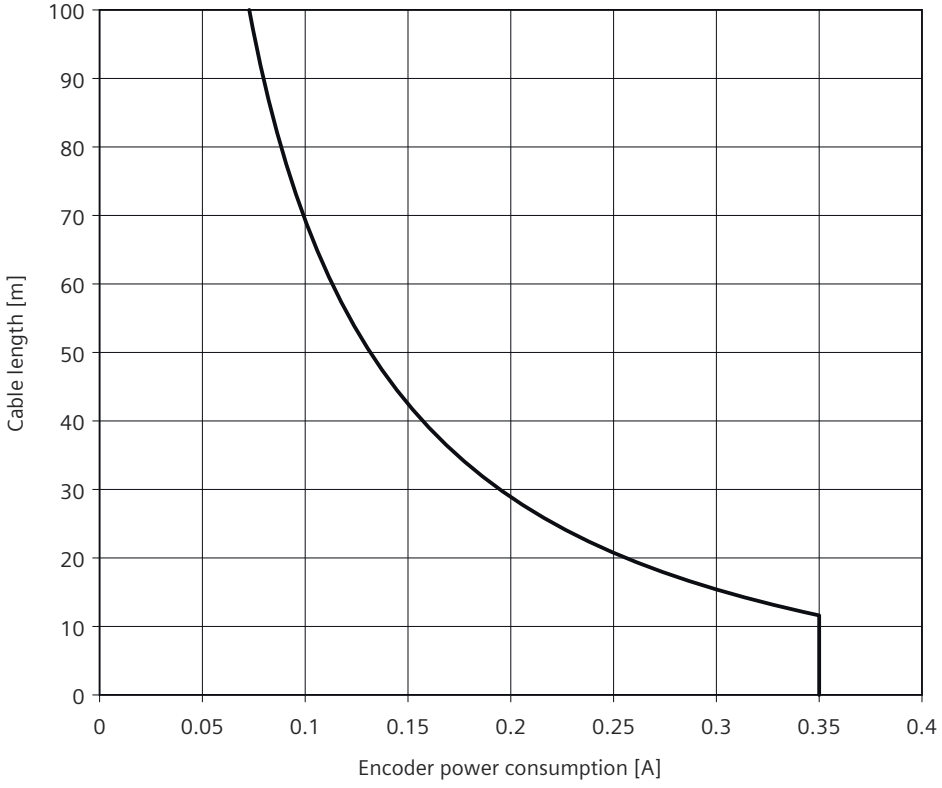

[1] When encoders without Remote Sense are used, the permissible cable length is limited to 100 m max. because the voltage drop depends on the cable length and the encoder current.

Figure 7-15 Max. cable length as a function of the encoder current drawn

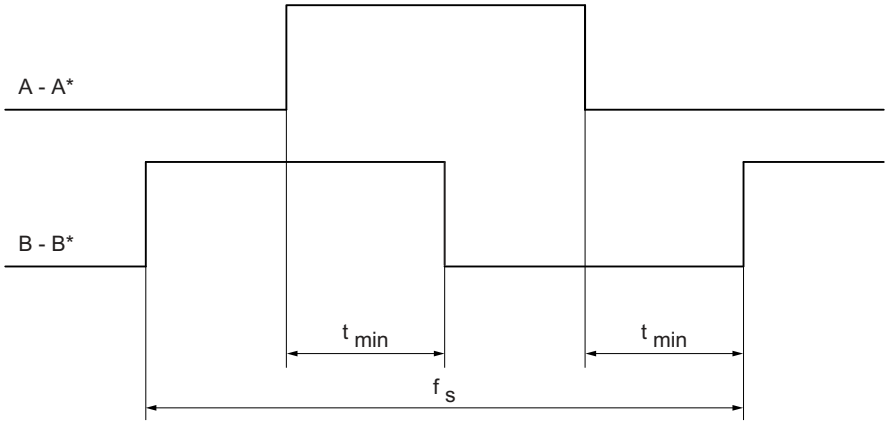

Figure 7-16 Signal characteristic of track A and track B between two edges: Time between two edges with pulse encoders

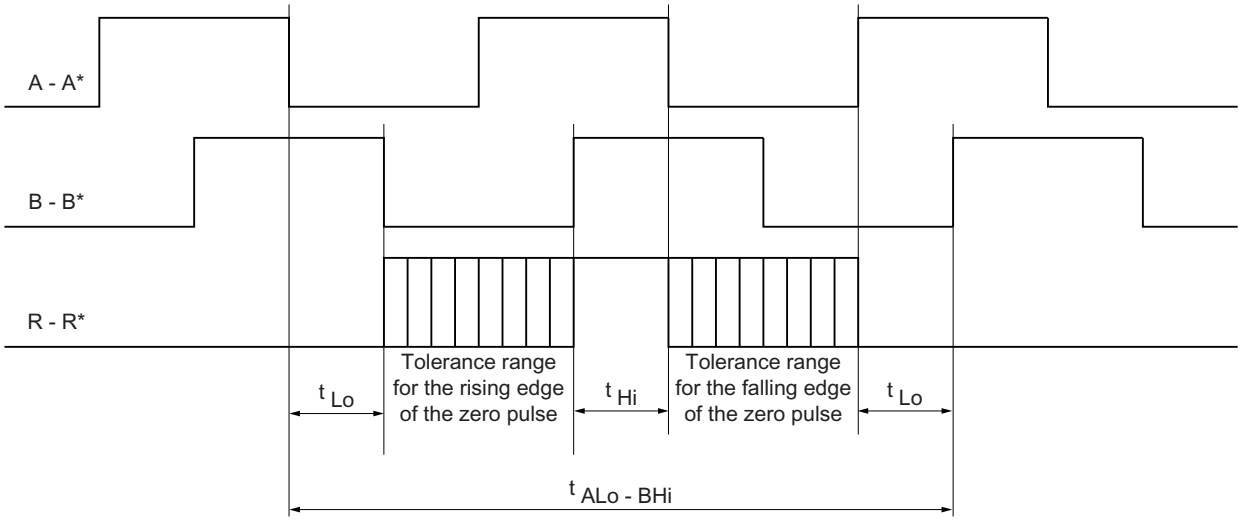

Figure 7-17 Position of the zero pulse to the track signals

7.4 Terminal Module TM15

7.4.1 Description

The TM15 Terminal Module is a terminal expansion module for snapping onto a mounting rail according to IEC 60715. The number of available digital inputs and outputs within a drive system can be expanded with the TM15.

Table 7-22 Interface overview of the TM15

Type	Number
DRIVE-CLiQ interfaces	2
Bidirectional digital inputs/outputs	24 (electrical isolation in 3 groups, each with 8 DI/DO)

7.4.2 Safety instructions

⚠ WARNING

Non-observance of the safety instructions

If the safety instructions in Chapter 1 are not observed, accidents can occur involving severe injuries or death.

- Make sure that the safety instructions are observed.

⚠ WARNING

Fire through overheating due to insufficient ventilation clearances

Inadequate ventilation clearances cause overheating with a risk for personnel due to smoke and fire. This can also result in more downtimes and reduced service lives of the Terminal Module.

- For this reason, it is imperative that you maintain the 50 mm clearances above and below the Terminal Module.

NOTICE

Damage through the use of incorrect DRIVE-CLiQ cables

Damage or malfunctions can occur on the devices or system when incorrect or unreleased DRIVE-CLiQ cables are used.

- Only use suitable DRIVE-CLiQ cables that have been released by Siemens for the respective application.

Note

Malfunctions due to polluted DRIVE-CLiQ interfaces

Malfunctions can occur in the system through the use of polluted DRIVE-CLiQ interfaces.

- Cover unused DRIVE-CLiQ interfaces with the supplied blanking covers.

7.4.3 Interface description

7.4.3.1 Overview

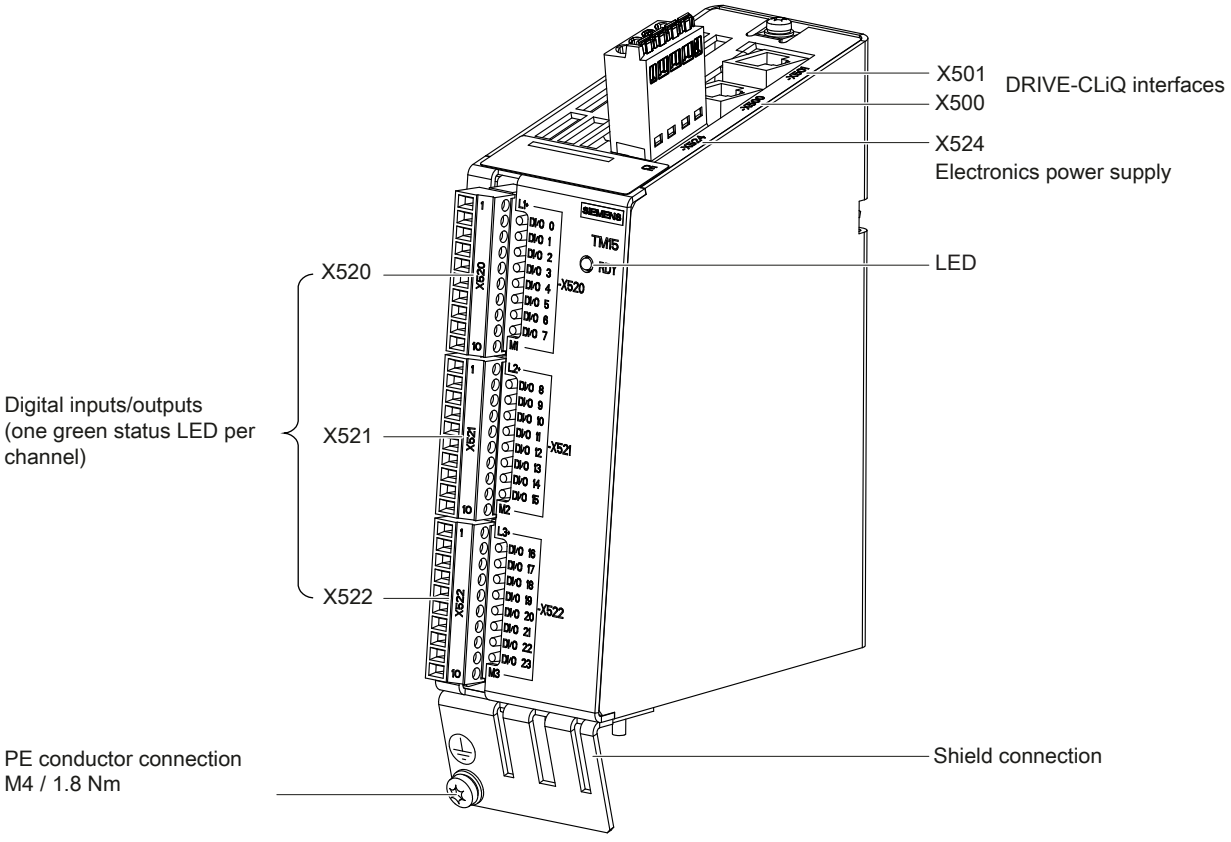

Figure 7-18 TM15 interface overview

Terminal type

X520, X521, X522		
Terminal type	Screw terminal	
Connectable cable cross-sections	Rigid, flexible Flexible with conductor end sleeve without plastic sleeve Flexible with conductor end sleeve with plastic sleeve AWG / kcmil	0.08 ... 1.5 mm² 0.25 ... 1.5 mm² 0.25 ... 0.5 mm² 28 ... 14
Stripped length	7 mm	
Tool	0.4 × 2.0 mm screwdriver	
Tightening torque	0.22 ... 0.25 Nm	
X524		
Terminal type	Spring-loaded terminal	

Connectable cable cross-sections	Rigid, flexible Flexible with conductor end sleeve without plastic sleeve Flexible with conductor end sleeve with plastic sleeve AWG / kcmil	0.2 ... 2.5 mm^2 0.25 ... 2.5 mm^2 0.25 ... 1.5 mm^2 24 ... 12
Stripped length	8 mm	

7.4.3.2 X500/X501 DRIVE-CLiQ interfaces

Table 7-23 X500/X501: DRIVE-CLiQ interfaces

Connector	Pin	Signal name	Technical specifications
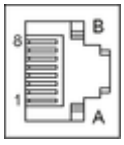	1	TXP	Transmit data +
	2	TXN	Transmit data -
	3	RXP	Receive data +
	4	Reserved, do not use	
	5	Reserved, do not use	
	6	RXN	Receive data -
	7	Reserved, do not use	
	8	Reserved, do not use	
	A	+ (24 V)	Power supply
	B	M (0 V)	Electronics ground
The blanking covers for the DRIVE-CLiQ interfaces are included in the scope of delivery; blanking cover (50 x) Article number: 6SL3066-4CA00-0AA0			

Note

The maximum DRIVE-CLiQ cable length is 100 m.

7.4.3.3 X524 Electronics power supply

Table 7-24 X524: Electronics power supply

Connector	Terminal	Designation	Technical specifications
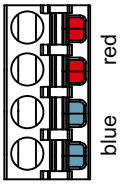	+	Electronics power supply	Voltage: 24 V DC (20.4 ... 28.8 V) Current consumption: max. 0.6 A [1] Max. current via jumper in connector: 20 A (15 A according to UL/CSA)
	+	Electronics power supply	
	M	Electronics ground	
	M	Electronics ground	

[1] Including the current consumption for the digital outputs

The maximum cable length that can be connected is 30 m.

Note

The two "+" or "M" terminals are jumpered in the connector. This ensures that the supply voltage is looped through.

The digital outputs are supplied via terminals X520, X521, and X522.

7.4.3.4 X520 Bidirectional digital inputs/outputs

Table 7-25 X520: Bidirectional digital inputs/outputs

Connector	Terminal	Designation [1]	Technical specifications
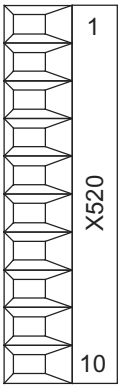	1	L1+	See Section "Technical specifications"
	2	DI/DO 0	
	3	DI/DO 1	
	4	DI/DO 2	
	5	DI/DO 3	
	6	DI/DO 4	
	7	DI/DO 5	
	8	DI/DO 6	
	9	DI/DO 7	
	10	M1 (GND)	

[1] L1+: A 24 V DC power supply for DI/DO 0 to 7 (first potential group) must always be connected if at least one DI/DO of the potential group is used as an output.
M1: A ground reference for DI/DO 0 to 7 (first potential group) must always be connected if at least one DI/DO of the potential group is used as either an input or output.
DI/DO: Bidirectional digital input/output

7.4.3.5 X521 Bidirectional digital inputs/outputs

Table 7-26 X521: Bidirectional digital inputs/outputs

Connector	Terminal	Designation [1]	Technical specifications
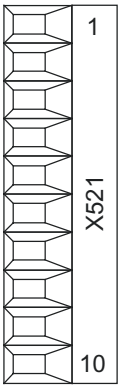	1	L2+	See Section "Technical specifications"
	2	DI/DO 8	
	3	DI/DO 9	
	4	DI/DO 10	
	5	DI/DO 11	
	6	DI/DO 12	
	7	DI/DO 13	
	8	DI/DO 14	
	9	DI/DO 15	
	10	M2 (GND)	

[1] L2+: A 24 V DC power supply for DI/DO 8 to 15 (second potential group) must always be connected if at least one DI/DO of the potential group is used as output.
M2: A ground reference for DI/DO 8 to 15 (second potential group) must always be connected if at least one DI/DO of the potential group is used as either input or output.
DI/DO: Bidirectional digital input/output

7.4.3.6 X522 Bidirectional digital inputs/outputs

Table 7-27 X522: Bidirectional digital inputs/outputs

Connector	Terminal	Designation [1]	Technical specifications
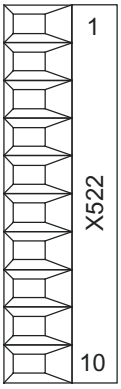	1	L3+	See Section "Technical specifications"
	2	DI/DO 16	
	3	DI/DO 17	
	4	DI/DO 18	
	5	DI/DO 19	
	6	DI/DO 20	
	7	DI/DO 21	
	8	DI/DO 22	
	9	DI/DO 23	
	10	M3 (GND)	

[1] L3+: A 24 V DC power supply for DI/DO 16 to 23 (third potential group) must always be connected if at least one DI/DO of the potential group is used as output.
M3: A ground reference for DI/DO 16 to 23 (third potential group) must always be connected if at least one DI/DO of the potential group is used as either input or output.
DI/DO: Bidirectional digital input/output

7.4.4 Connection example

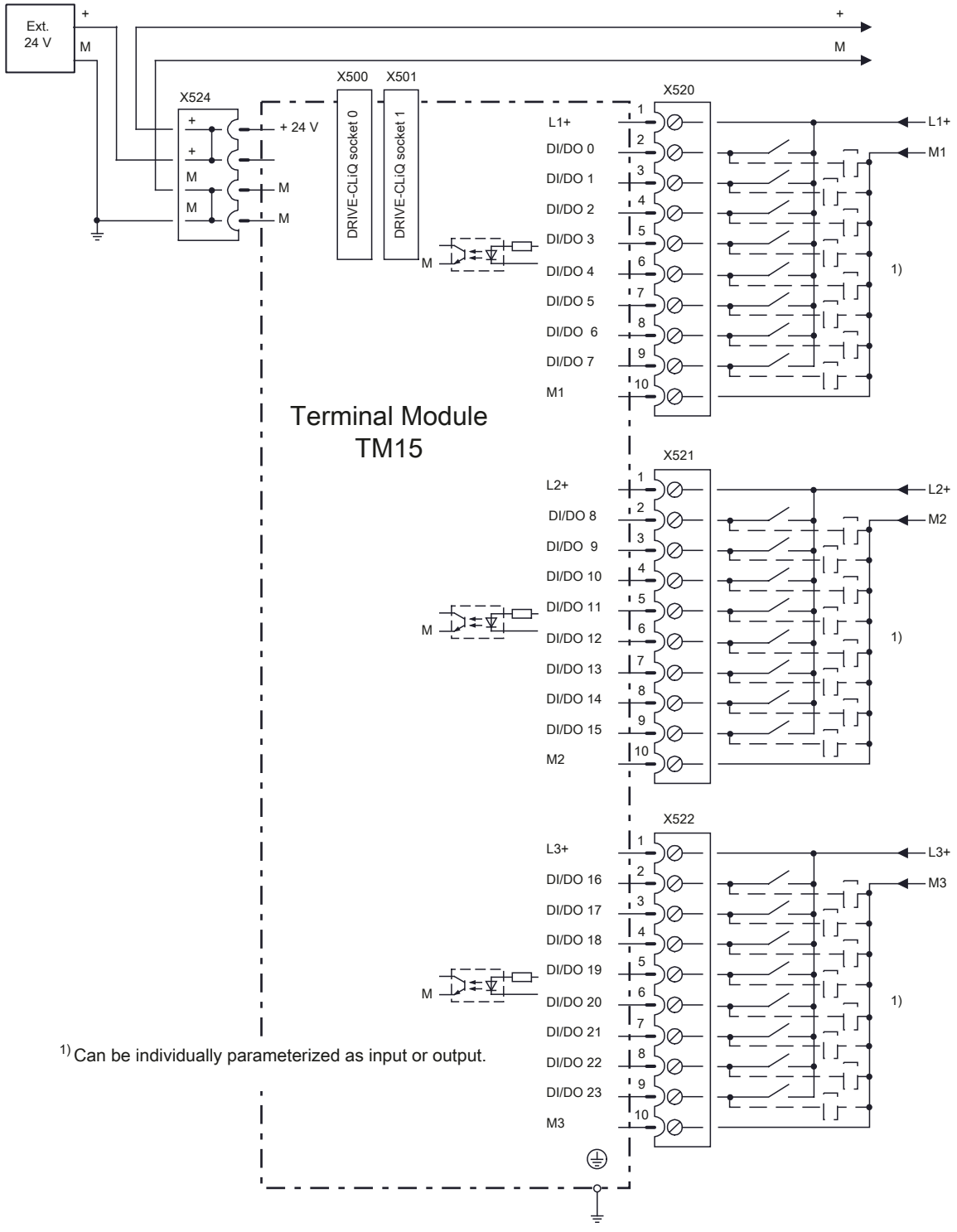

Figure 7-19 Example connection of TM15

7.4.5 Meaning of the LED

Table 7-28 Meanings of the LED on the Terminal Module TM15

LED	Color	Status	Description, cause	Remedy
READY	-	Off	The electronics power supply is missing or outside the permissible tolerance range.	–
	Green	Continuous light	The component is ready for operation. Cyclic DRIVE-CLiQ communication is taking place.	–
	Orange	Continuous light	DRIVE-CLiQ communication is being established.	–
	Red	Continuous light	This component has at least one fault. **Note:** The LED is activated irrespective of whether the corresponding messages have been reconfigured.	Remove and acknowledge the fault.
	Green/red	Flashing light 2 Hz	Firmware is being downloaded.	–
		Flashing light 2 Hz	Firmware download has been completed. The system waits for POWER ON.	Carry out a POWER ON.
	Green/ orange or red/ orange	Flashing light 2 Hz	Component recognition via LED is activated[1]. **Note:** Both options depend on the LED status when component recognition is activated.	–

[1] See SINAMICS DCM List Manual for the parameters to activate the recognition of components via LED

Cause and rectification of faults

The following documents contain information about the cause of faults and how they can be rectified:

SINAMICS DCM List Manual

7.4.6 Dimension drawing

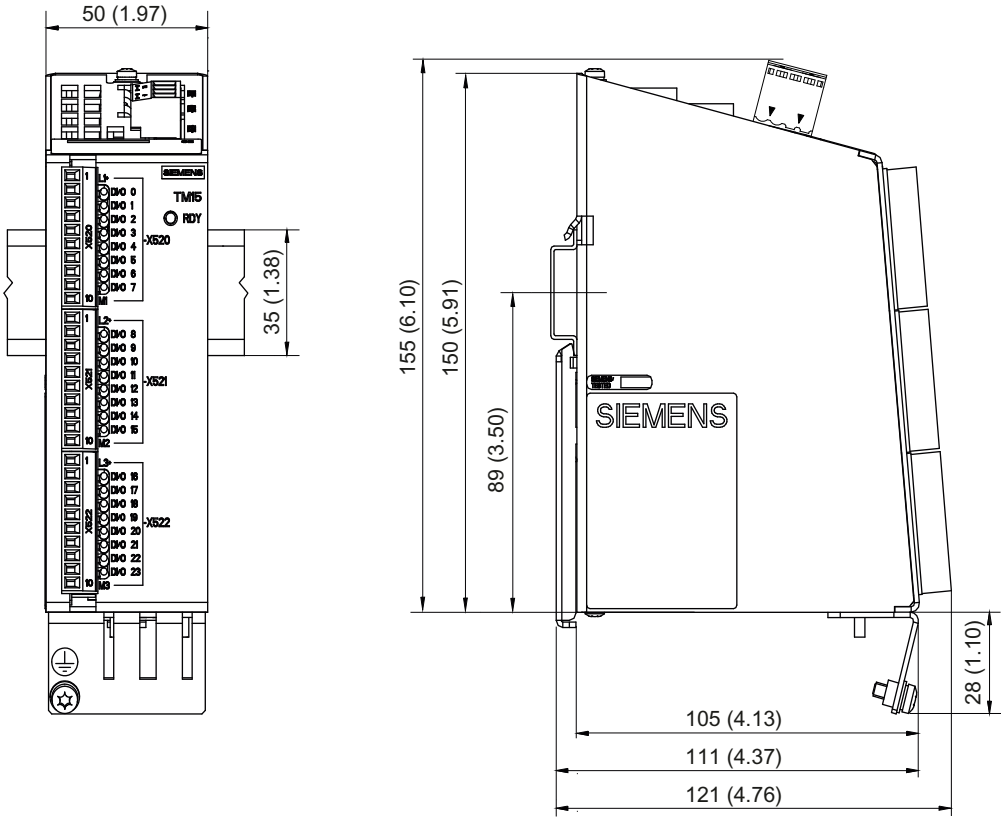

Figure 7-20 Dimension drawing of Terminal Module TM15, all data in mm and (inches)

7.4.7 Installation

Installation

1. Tilt the component backwards slightly and attach it to the mounting rail using the hooks.
2. Swivel the component onto the mounting rail until you hear the mounting slide at the rear latch into position.
3. Slide the components along the mounting rail to either the left or right up to their final position.

Removal

1. First shift the mounting slide downwards at the lug to release the interlocking with the mounting rail.
2. Swivel the component to the front and withdraw it upwards from the mounting rail.

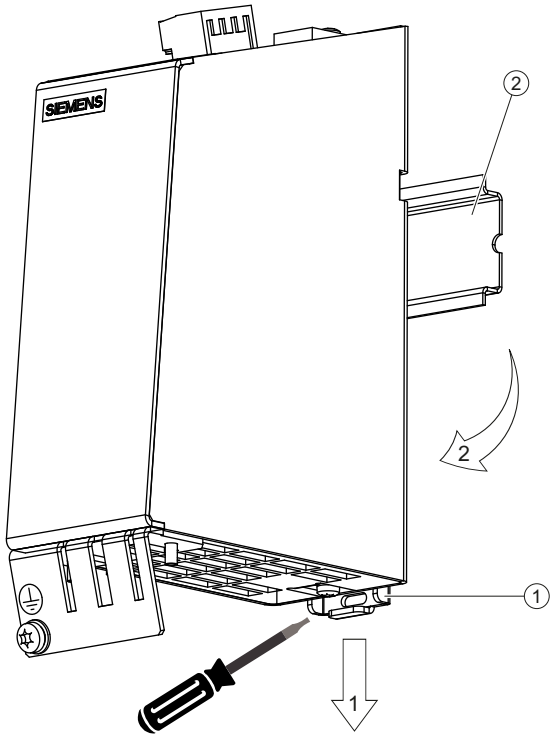

① Mounting slide
② Standard mounting rail

Figure 7-21 Removing from a mounting rail

7.4.8 Protective conductor connection and shield support

It is always advisable to shield the digital I/O wiring.

The following diagrams show typical Weidmüller shield connection terminals for the shield supports.

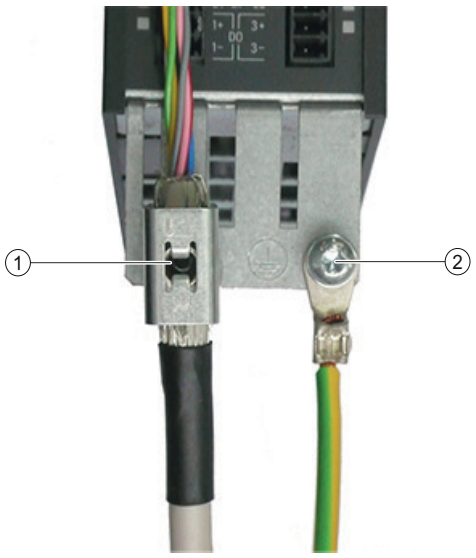

① Shield connection terminal, Weidmüller company, type: KLBUE CO1, Article number: 1753311001

② Protective conductor connection with M4 screw / 1.8 Nm

Figure 7-22 Shield supports and protective conductor connection

NOTICE
Damage or faulty operation due to incorrect shielding or impermissible cable lengths If the correct shielding procedures and the permissible cable lengths are not observed, the machine can be damaged or may malfunction. • Only use shielded cables. • Do not exceed the cable lengths stated in the technical data.

Note

Only use screws with a permissible mounting depth of 4 - 6 mm.

The TM15 enclosure is connected to the ground terminal of the module supply (terminal X524). If the ground terminal is actually grounded, then the enclosure is also grounded. An additional ground connection using the M4 screw is especially necessary if high potential bonding currents can flow (e.g. through the cable shield).

7.4.9 Connector coding

A series of coding elements ("coding sliders") are supplied with each Terminal Module TM15.

Connector coding

1. Insert at least one coding slider at the required position.
2. Remove the associated coding lug at the connector.

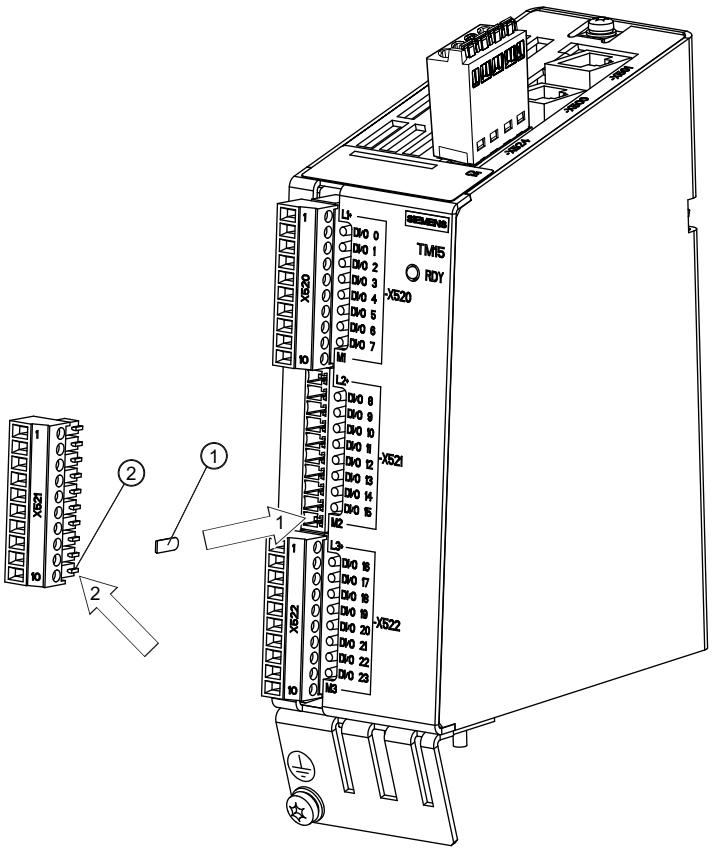

① Insert a coding slider.

② Cut off the coding lug on the connector.

Figure 7-23 Procedure for encoding a connector

To avoid wiring errors, unique coding patterns must be defined for the connectors X520, X521 and X522.

Possible patterns:

- 3 connectors on one component are encoded differently (i.e. X520, X521 and X522).
- Different component types are encoded differently.
- Otherwise identical components are encoded differently on the same machine, (e.g. several TM15-type components).

7.4.10 Technical data

Table 7-29 Technical data

6SL3055-0AA00-3FAx	Unit	Value
Electronic power supply Voltage Current (without DRIVE-CLiQ or digital outputs) Power loss	 V_{DC} A_{DC} W	 24 (20.4 ... 28.8) 0.15 <3
Max. cable length	m	30
Peripherals		
Digital inputs/outputs	Can be parameterized as either DI or DO	
Number of digital inputs/outputs	24	
Electrical isolation	Yes, in groups of 8	
Digital inputs		
Voltage	V_{DC}	-30 ... +30
Low level (an open digital input is interpreted as "low")	V_{DC}	-30 ... +5
High level	V_{DC}	15 ... 30
Input impedance	kΩ	2.8
Input current, typical (at 24 V DC)	mA	9
Max. voltage in OFF state	V_{DC}	5
Current in OFF state	mA	0.0 to 1.0 (per channel)
Typical input delay of the digital inputs	µs	"0" → "1": 50 "1" → "0": 100
Digital outputs (continuously short-circuit proof)		
Voltage	V_{DC}	24
Max. load current per digital output	A_{DC}	0.5
Output delay (resistive load)		
Typical	µs	"0" → "1": 50 "1" → "0": 150
Maximum	µs	"0" → "1": 100 "1" → "0": 225
Min. output pulse (100% amplitude, 0.5 A with resistive load)	µs	125 (typ.) 350 (max.)
Switching frequency For resistive load For inductive load For lamp load Max. lamp load	 Hz Hz Hz W	 max. 100 max. 0.5 max. 10 5
Max. switching frequency (100% amplitude, 50%/50% duty cycle; with 0.5 A and a resistive load)	kHz	1 (typ.)
Voltage drop in ON state	V_{DC}	0.75 (max.) for maximum load in all circuits
Leakage current in OFF state	µA	Max. 10 per channel
Voltage drop, output (I/O power supply to the output)	V_{DC}	0.5

6SL3055-0AA00-3FAx	Unit	Value
Max. total current of outputs (per group) up to 60° C up to 50° C up to 40° C	 A_{DC} A_{DC} A_{DC}	 2 3 4
Response time	The response time for the digital inputs/outputs (TM15 DI/DO) consists of the following elements: • Response time on the component itself (approx. 1/2 DRIVE-CLiQ clock cycle). • Transmission time via the DRIVE-CLiQ connection (approx. 1 DRIVE-CLiQ clock cycle). • Evaluation on the Control Unit (see function diagram) For additional information: SINAMICS DCM List Manual, Chapter "Function block diagrams"	
Weight	kg	1.0
Protective conductor connection	On enclosure with M4/1.8 Nm screw	
Approvals	UL and cULus, http://www.ul.com (www.ul.com) File: E164110, Vol. 2, Sec. 9	

7.5 Terminal Module TM31

7.5.1 Description

The TM31 Terminal Module is a terminal expansion module for snapping onto a mounting rail according to IEC 60715. The TM31 Terminal Module can be used to increase the number of available digital and analog inputs and outputs within a drive system.

The TM31 contains the following interfaces:

Table 7-30 Interface overview of the TM31

Type	Number
DRIVE-CLiQ interfaces	2
Digital inputs	8
Bidirectional digital inputs/outputs	4
Analog inputs	2
Analog outputs	2
Relay outputs	2
Temperature sensor input	1

Supported types

SINAMICS DCM only supports one version of the Terminal Module TM31:

Table 7-31 TM31 types

Article number TM31	Use with SINAMICS DCM
6SL3055-0AA00-3AA0	Not possible
6SL3055-0AA00-3AA1	Possible

7.5.2 Safety instructions

⚠ WARNING

Non-observance of the safety instructions

If the safety instructions in Chapter 1 are not observed, accidents can occur involving severe injuries or death.

- Make sure that the safety instructions are observed.

⚠ WARNING

Fire through overheating due to insufficient ventilation clearances

Inadequate ventilation clearances cause overheating with a risk for personnel due to smoke and fire. This can also result in more downtimes and reduced service lives of the Terminal Module.

- For this reason, it is imperative that you maintain the 50 mm clearances above and below the Terminal Module.

NOTICE

Device failure as a result of unshielded or incorrectly routed cables to temperature sensors

Unshielded or incorrectly routed cables to temperature sensors can result in interference being coupled into the signal processing electronics from the power side. This can result in significant disturbance of all signals (fault messages) up to failure of individual components (destruction of the devices).

- Only use shielded cables as temperature sensor cables.
- If temperature sensor cables are routed together with the motor cable, use separately shielded cables twisted in pairs.
- Connect the cable shield at both ends to ground potential over a large surface area.

NOTICE

Damage through the use of incorrect DRIVE-CLiQ cables

Damage or malfunctions can occur on the devices or system when incorrect or unreleased DRIVE-CLiQ cables are used.

- Only use suitable DRIVE-CLiQ cables that have been released by Siemens for the respective application.

Note

Malfunctions due to polluted DRIVE-CLiQ interfaces

Malfunctions can occur in the system through the use of polluted DRIVE-CLiQ interfaces.

- Cover unused DRIVE-CLiQ interfaces with the supplied blanking covers.

7.5.3 Interface description

7.5.3.1 Overview

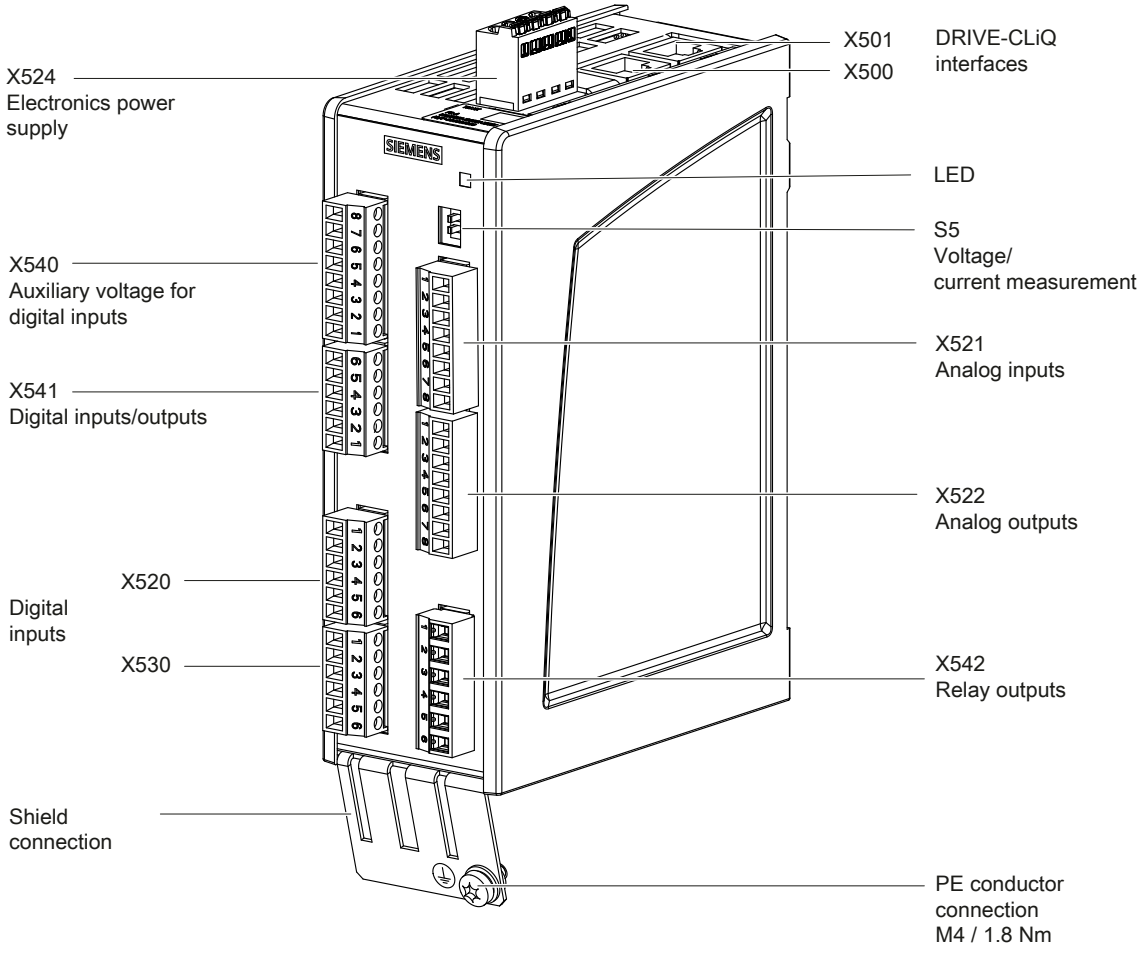

Figure 7-24 Interface description TM31

Terminal type

X520, X521, X522, X530, X540, X541		
Terminal type	Screw terminal	
Connectable cable cross-sections	Rigid, flexible Flexible with conductor end sleeve without plastic sleeve Flexible with conductor end sleeve with plastic sleeve AWG / kcmil	0.08 ... 1.5 mm^2 0.25 ... 1.5 mm^2 0.25 ... 0.5 mm^2 28 ... 14
Stripped length	7 mm	
Tool	0.4 × 2.0 mm screwdriver	

Tightening torque	0.22 ... 0.25 Nm	
X542		
Terminal type	Screw terminal	
Connectable cable cross-sections	Rigid, flexible Flexible with conductor end sleeve without plastic sleeve Flexible with conductor end sleeve with plastic sleeve AWG / kcmil	0.2 ... 2.5 mm² 0.25 ... 1 mm² 0.25 ... 1 mm² 22 ... 12
Stripped length	9 mm	
Tool	0.6 × 3.5 mm screwdriver	
Tightening torque	0.5 ... 0.6 Nm	
X524		
Terminal type	Spring-loaded terminal	
Connectable cable cross-sections	Rigid, flexible Flexible with conductor end sleeve without plastic sleeve Flexible with conductor end sleeve with plastic sleeve AWG / kcmil	0.2 ... 2.5 mm² 0.25 ... 2.5 mm² 0.25 ... 1.5 mm² 24 ... 12
Stripped length	8 mm	

7.5.3.2 X500/X501 DRIVE-CLiQ interfaces

Table 7-32 X500/X501: DRIVE-CLiQ interfaces

Connector	Pin	Signal name	Technical specifications
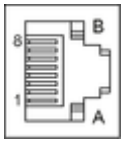	1	TXP	Transmit data +
	2	TXN	Transmit data -
	3	RXP	Receive data +
	4	Reserved, do not use	
	5	Reserved, do not use	
	6	RXN	Receive data -
	7	Reserved, do not use	
	8	Reserved, do not use	
	A	+ (24 V)	Power supply
	B	M (0 V)	Electronics ground

The blanking covers for the DRIVE-CLiQ interfaces are included in the scope of delivery.
Blanking covers (50 x) Article No.: 6SL3066-4CA00-0AA0

Note

The maximum DRIVE-CLiQ cable length is 100 m.

7.5.3.3 X524 Electronics power supply

Table 7-33 X524: Electronics power supply

Connector	Terminal	Designation	Technical specifications
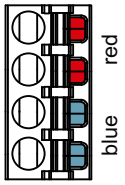	+	Electronics power supply	Voltage: 24 V DC (20.4 ... 28.8 V) Current consumption: max. 1.7 A [1] Max. current via jumper in connector: 20 A (15 A according to UL/CSA)
	+	Electronics power supply	
	M	Electronics ground	
	M	Electronics ground	

[1] Including the current consumption for the digital outputs and for supplying the sensor

The maximum cable length that can be connected is 30 m.

Note

The two "+" or "M" terminals are jumpered in the connector. This ensures that the supply voltage is looped through.

The current consumption increases by the value for the DRIVE-CLiQ node and digital outputs.

7.5.3.4 X520, X530 Digital inputs

Table 7-34 X520: Digital inputs

Connector	Terminal	Designation [1]	Technical specifications
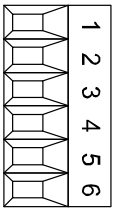	1	DI 0	Voltage: - 3 ... +30 V Electrical isolation: Yes Reference potential: M1 Input characteristic acc. to IEC 61131-2, type 1 Input voltage (including ripple) "1" signal: 15 ... 30 V "0" signal: -3 ... +5 V Input current at 24 V DC: typ. 9 mA at < 0.5 mA: "0" signal reliably detected Input delay: For "0" → "1": typ. 50 µs/max. 100 µs for "1" → "0": typ. 130 µs, max. 150 µs
	2	DI 1	
	3	DI 2	
	4	DI 3	
	5	M1	
	6	M	

Table 7-35 X530: Digital inputs

Connector	Terminal	Designation [1]	Technical specifications
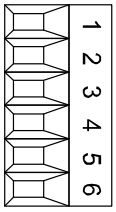	1	DI 4	Voltage: - 3 ... +30 V Electrical isolation: Yes Reference potential: M2 Input characteristic acc. to IEC 61131-2, type 1 Input voltage (including ripple) "1" signal: 15 ... 30 V "0" signal: -3 ... +5 V Input current at 24 V DC: typ. 9 mA at < 0.5 mA: "0" signal reliably detected Input delay: For "0" → "1": typ. 50 µs/max. 100 µs for "1" → "0": typ. 130 µs, max. 150 µs
	2	DI 5	
	3	DI 6	
	4	DI 7	
	5	M2	
	6	M	

[1] DI: Digital input; M: Electronics ground; M1, M2: Ground reference

Note

Ensuring the function of digital inputs

An open input is interpreted as "low".

Terminal M1 or M2 must be connected in order that digital inputs (DI) can function.

This is achieved through one of the following measures:

1. Provide the ground reference of the digital inputs
2. A jumper to terminal M
   Note:: This removes isolation for these digital inputs.

7.5.3.5 X521 Analog inputs

Table 7-36 X521: Analog inputs

Connector	Terminal	Designation [1]	Technical specifications
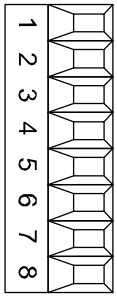	1	AI 0+	The analog inputs can be toggled between current and voltage input using switches S5.0 and S5.1 **As voltage input** : -10 ... +10 V; R_i > 100 kΩ Resolution: 11 bits + sign **As current input**: -20 ... +20 mA; R_i = 250 kΩ Resolution: 10 bits + sign
	2	AI 0-	
	3	AI 1+	
	4	AI 1-	
	5	P10	**Auxiliary voltage**: P10 = 10 V N10 = -10 V Current-carrying capacity: max. 3 mA Sustained short-circuit-proof
	6	M	
	7	N10	
	8	M	

[1] AI: Analog inputs; P10/N10: Auxiliary voltage; M: Ground reference

NOTICE

Damage or malfunctions through impermissible voltage values

If a current exceeding ±35 mA flows through the analog current input, then the component could be destroyed.

The common mode range must not be violated in order to avoid incorrect analog-digital conversion results.

- The input voltage may only be in the range between -30 V and +30 V (destruction limit).
- The common mode voltage may only be in the range between -10 V and +10 V (error limit).
- The back EMF at the auxiliary voltage outputs may only be in the range between -15 V and +15 V.

Note

The power supply for the analog inputs can be taken internally or from an external power supply unit

7.5.3.6 Analog inputs current/voltage switch

Table 7-37 Current/Voltage Change-over switch S5

	Switch	Function
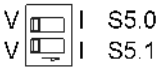	S5.0	Switchover of voltage (V)/current (I) AI0
	S5.1	Switchover of voltage (V)/current (I) AI1

7.5.3.7 X522 Analog outputs/temperature sensor

Table 7-38 X522: Analog outputs/temperature sensor

Connector	Terminal	Designation [1]	Technical specifications
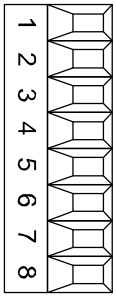	1	AO 0V+	You can set the following output signals using parameters: **Voltage:** -10 V ... +10 V (max. 3 mA) **Current 1**: 4 ... 20 mA (max. load resistance ≤ 500 Ω) **Current 2:** -20 ... +20 mA (max. load resistance ≤ 500 Ω) **Current 3**: 0 ... 20 mA (max. load resistance ≤ 500 Ω) Resolution: 11 bits + sign Sustained short-circuit-proof
	2	AO 0-	
	3	AO 0C+	
	4	AO 1V+	
	5	AO 1-	
	6	AO 1C+	
	7	+ Temp [2]	Temperature sensor PT1000 / PTC / KTY84-1C130 Measuring current via temperature sensor connection: 2 mA
	8	- Temp [2]	

[1] AO xV: Analog output voltage; AO xC: Analog output current

[2] Accuracy of the temperature measurement (including evaluation)
- PT1000: ±5 °C (PT1000 tolerance class B acc. to IEC 60751)
- PTC: ±5 °C
- KTY: ±7 °C

NOTICE

Damage or malfunctions through impermissible voltage values

If the back EMF is impermissible then damage and malfunctions may occur on the components.

- The back EMF at the outputs may only be in the range between -15 V and +15 V.

NOTICE

Motor damage due to incorrectly connected KTY temperature sensor

If a KTY temperature sensor is connected with incorrect polarity, it is not possible to detect when the motor overheats. Overheating may result in damage to the motor.

- Connect a KTY temperature sensor with the correct polarity.



⚠ WARNING

Electric shock when the motor temperature sensor insulation fails

When connecting temperature sensors which are not isolated from the motor power circuit according to safe electrical separation, arcing to the signal electronics may occur.

- Use motors whose temperature sensors have safe electrical separation.
- Use only connecting cables and connectors with safe electrical separation between the insulated conductors of the temperature sensor and the insulated conductors of the power circuit.

7.5.3.8 X540 Auxiliary voltage for the digital inputs

Table 7-39 X540: Auxiliary voltage for the digital inputs

Connector	Terminal	Designation	Technical specifications
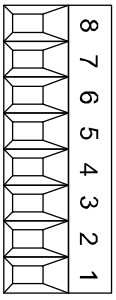	8	+24 V	Voltage: +24 VDC Max. total load current of +24 V auxiliary voltage for terminals X540 and X541 combined: 150 mA
	7	+24 V	
	6	+24 V	
	5	+24 V	
	4	+24 V	
	3	+24 V	
	2	+24 V	
	1	+24 V	

Note

This power supply is only used for powering the digital inputs.

Note

If the 24 V supply is briefly interrupted, the auxiliary voltage for the digital inputs is deactivated for this time.

7.5.3.9 X541 Bidirectional digital inputs/outputs

Table 7-40 X541: Bidirectional digital inputs/outputs

Connector	Terminal	Designation [1]	Technical specifications
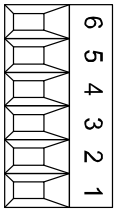	6	M	**As input**: Voltage: -3 ... 30 V Electrical isolation: no Reference potential: M Input characteristic acc. to IEC 61131-2, type 1 Input voltage (including ripple) "1" signal: 15 ... 30 V "0" signal: -3 ... +5 V Input current at 24 V DC: typ. 9 mA at < 0.5 mA: "0" signal reliably detected Input delay: For "0" → "1": typ. 50 µs -for "1" → "0" typ. 100 µs **As output:** Voltage: 24 V DC Electrical isolation: no Reference potential: M Output voltage "1" signal, with load: > X524.+ -2 V Output current for each output: ≤ 0.5 A Sum of all 4 outputs: ≤ 0.1 A (when parameter p4046 = 0) ≤ 1.0 A (when parameter p4046 = 1) Residual current for "0" signal: < 0.5 mA Short-circuit protection, automatic restart after a short-circuit Load types: ohmic, capacitive, inductive Output delay for "0" → "1": typ. 150 µs / max. 500 µs (ohmic load) for "1" → "0": typ. 50 µs (ohmic load) Switching frequency For ohmic load: Max. 100 Hz For inductive load: Max. 0.5 Hz For lamp load: max. 10 Hz Lamp load: max. 5 W
	5	DI/DO 11	
	4	DI/DO 10	
	3	DI/DO 9	
	2	DI/DO 8	
	1	+24 V	Auxiliary voltage: Voltage: +24 V DC Max. total load current of +24 V auxiliary voltage for terminals X540 and X541 combined: 150 mA

[1] DI/DO: Bidirectional digital input/output; M: Electronics ground

Note

An open input is interpreted as "low".

Note

If a the 24 V supply is briefly interrupted, the digital outputs are deactivated during this time.

7.5.3.10 X542 Relay outputs

Table 7-41 X542: Relay outputs

Connector	Terminal	Designation [1]	Technical specifications
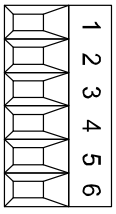	1	DO 0.NC	Contact type: Two-way contact max. load current: 8 A Max. switching voltage: 250 V_{AC}. 30 V_{DC} Max. switching capacity at 250 V_{AC}: 2000 VA (cosφ = 1) Max. switching capacity at 250 $V_{AC:}$ 750 VA (cosφ = 0.4) Max. Switching capacity at 30 V_{DC}: 240 W (resistive load) Required minimum current: 100 mA Output delay: ≤ 20 ms [2] Overvoltage category: Class II according to IEC 61800-5-1
	2	DO 0.COM	
	3	DO 0.NO	
	4	DO 1.NC	
	5	DO 1.COM	
	6	DO 1.NO	

[1] DO: Digital output; NO: Normally open contact; NC: Normally closed contact; COM: Mid-position contact

[2] Depending on the parameterization and the supply voltage (P24) of the TM31

7.5.4 Connection example

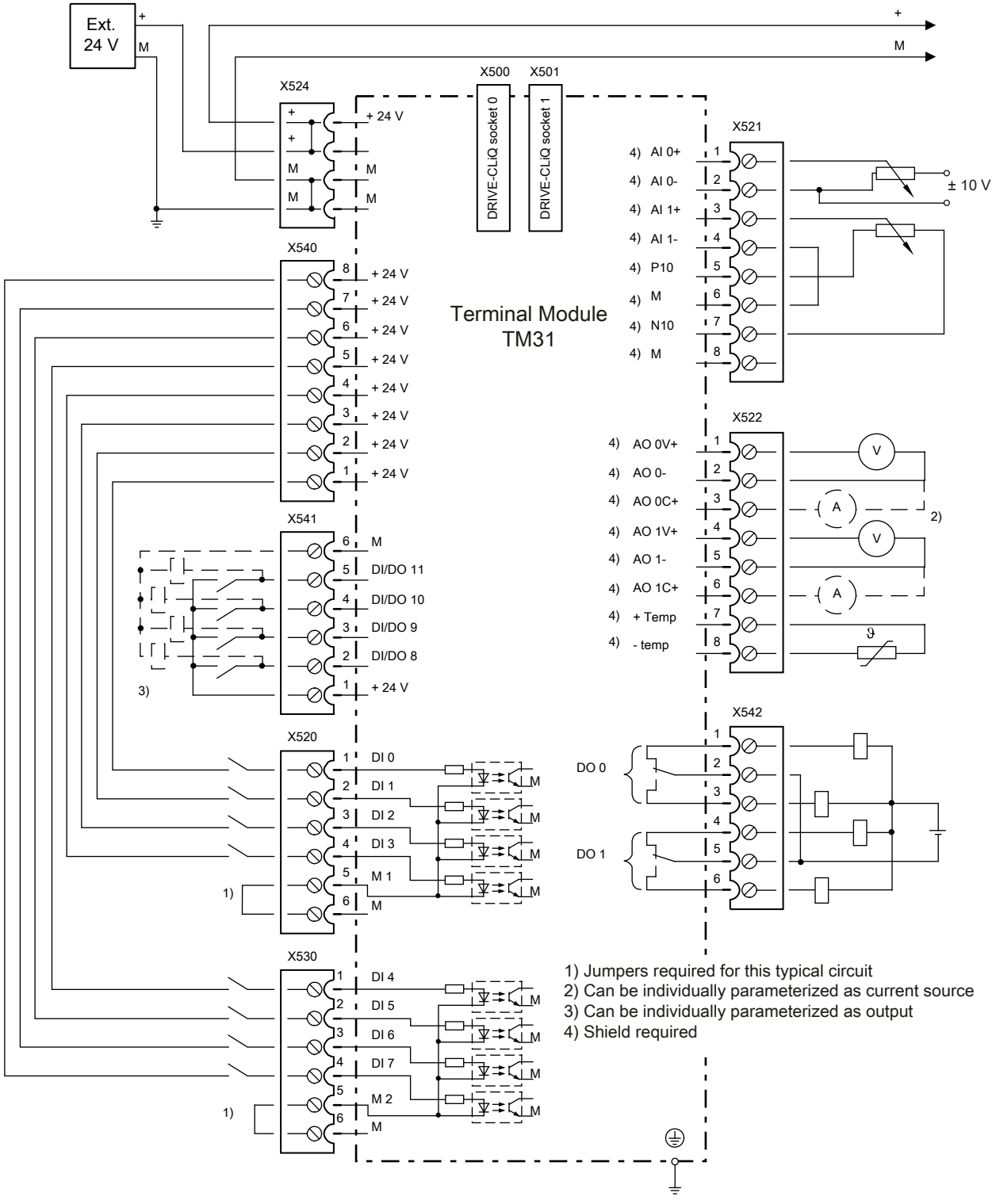

Figure 7-25 TM31 connection example

7.5.5 Meaning of the LED

Table 7-42 Meanings of the LED on the Terminal Module TM31

LED	Color	Status	Description, cause	Remedy
READY	-	Off	The electronics power supply is missing or outside the permissible tolerance range.	–
	Green	Continuous light	The component is ready for operation. Cyclic DRIVE-CLiQ communication is taking place.	–
	Orange	Continuous light	DRIVE-CLiQ communication is being established.	–
	Red	Continuous light	This component has at least one fault. **Note:** The LED is activated irrespective of whether the corresponding messages have been reconfigured.	Remove and acknowledge the fault.
	Green/red	Flashing light 0.5 Hz	Firmware is being downloaded.	–
		Flashing light 2 Hz	Firmware download has been completed. The system waits for POWER ON.	Carry out a POWER ON.
	Green/ orange or red/ orange	Flashing light 2 Hz	Component recognition via LED is activated[1)]. **Note:** Both options depend on the LED status when component recognition is activated.	–

[1)] See SINAMICS DCM List Manual for the parameters to activate the recognition of components via LED

Cause and rectification of faults

The following documents contain information about the cause of faults and how they can be rectified:

SINAMICS DCM List Manual

7.5.6 Dimension drawing

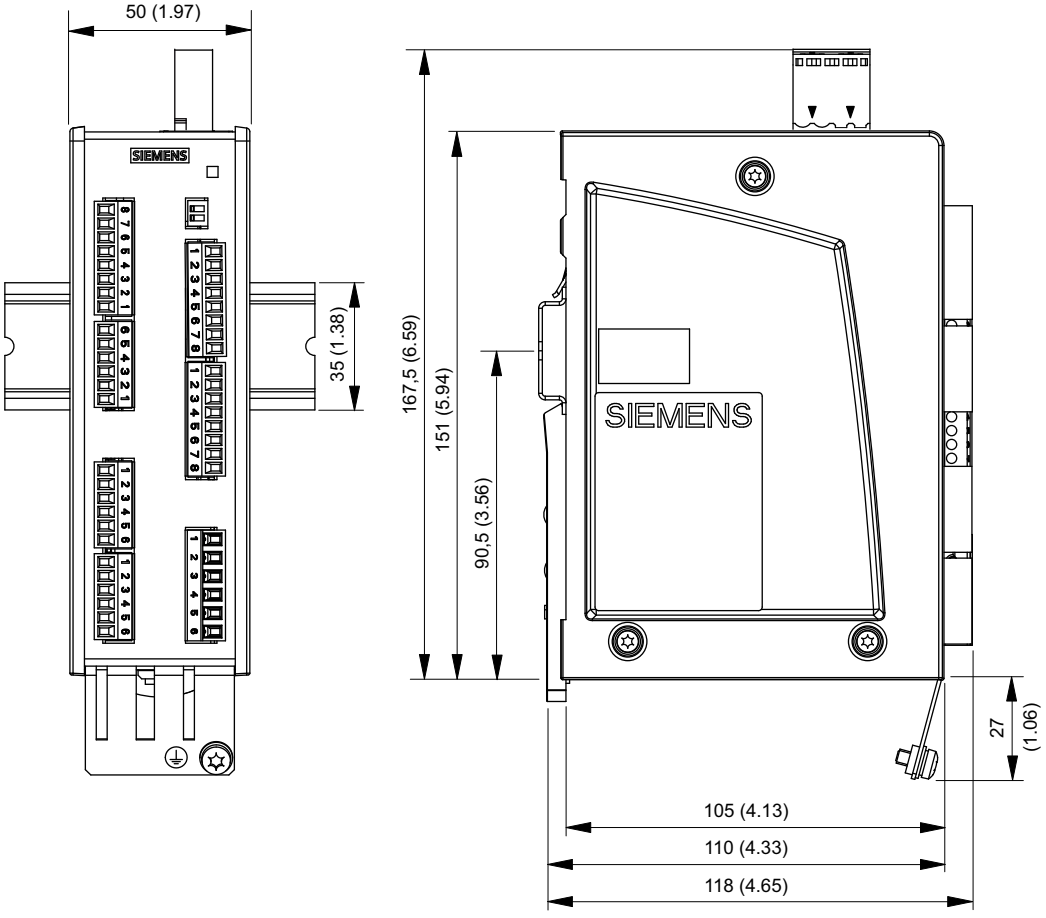

Figure 7-26 Dimension drawing of Terminal Module TM31, all data in mm and inches

7.5.7 Installation

Installation

1. Tilt the component backwards slightly and attach it to the mounting rail using the hooks.
2. Swivel the component onto the mounting rail until you hear the mounting slide at the rear latch into position.
3. Slide the components along the mounting rail to either the left or right up to their final position.

Removal

1. First shift the mounting slide downwards at the lug to release the interlocking with the mounting rail.
2. Swivel the component to the front and withdraw it upwards from the mounting rail.

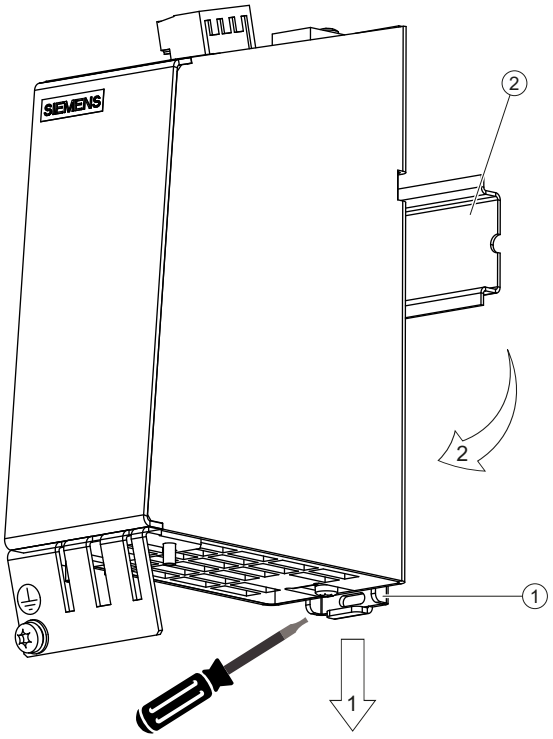

① Mounting slide
② Standard mounting rail

Figure 7-27 Removing from a mounting rail

7.5.8 Protective conductor connection and shield support

It is always advisable to shield the digital input/output wiring.

The following diagrams show typical Weidmüller shield connection terminals for the shield supports.

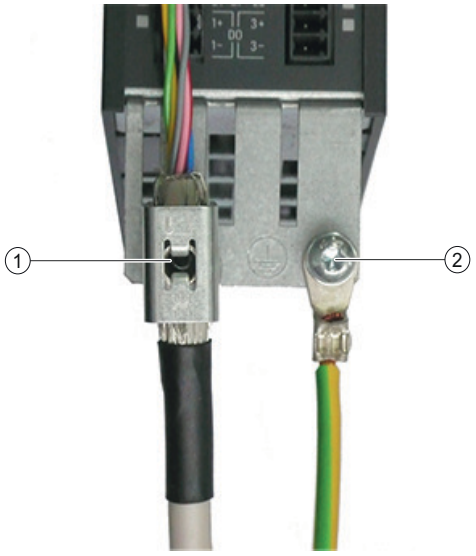

① Shield connection terminal, Weidmüller company, type: KLBUE CO1, Article number: 1753311001

② Protective conductor connection M4 / 1.8 Nm

Figure 7-28 Shield supports

NOTICE
Damage or faulty operation due to incorrect shielding or inadmissible cable lengths If the correct shielding procedures and the permissible cable lengths are not observed, the machine can be damaged or may malfunction. • Only use shielded cables. • Do not exceed the cable lengths stated in the technical data.

7.5.9 Connector coding

To ensure that identical connectors are assigned correctly on the TM31, the connectors are coded as shown in the diagram below.

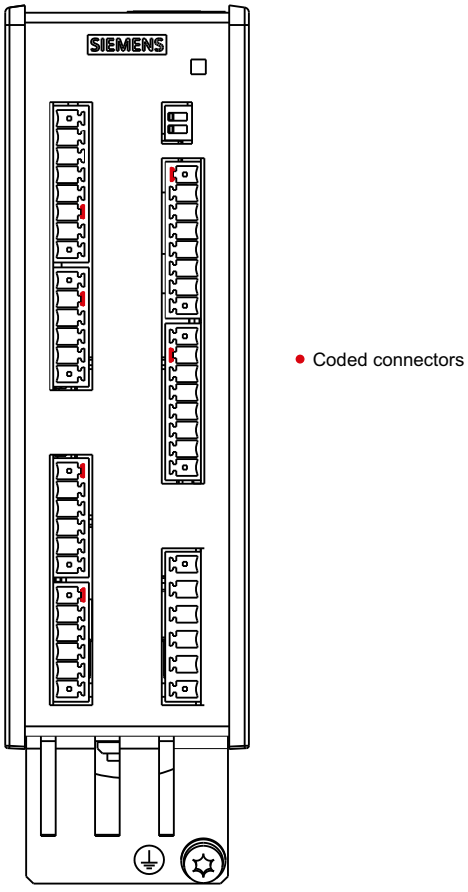

Figure 7-29 Example of connector coding at the TM31

The bending radii of the cables must be observed (see MOTION-CONNECT description).

7.5.10 Technical data

Table 7-43 Technical data

6SL3055-0AA00-3AA1	Unit	Value
Electronics power supply		
Voltage	V_{DC}	24 (20.4 ... 28.8)
Current (without DRIVE-CLiQ, digital outputs and auxiliary voltages)	A_{DC}	≤0.2
Power loss	W	≤5
PE/ground connection	At the housing with M4/1.8 Nm screw	

6SL3055-0AA00-3AA1	Unit	Value
Response time	The response time for the digital inputs/outputs and the analog inputs/outputs consists of the following elements: • Response time on the component itself (approx. 1/2 DRIVE-CLiQ clock cycle). • Transmission time via the DRIVE-CLiQ connection (approx. 1 DRIVE-CLiQ clock cycle) • Evaluation on the Control Unit (see function diagram) Further information: SINAMICS DCM List Manual, Chapter "Function diagrams"	
Maximum cable lengths: Electronics power supply DRIVE-CLiQ cables inputs/outputs	 m m m	 30 100 30
Weight	kg	0.49

7.6 Terminal Module TM150

7.6.1 Description

The terminal module TM150 is a DRIVE-CLiQ component for temperature evaluation. The temperature is measured in a temperature range from -99 °C to +250 °C for the following temperature sensors:

- PT100 (with monitoring for wire breakage and short-circuit)
- PT1000 (with monitoring for wire breakage and short-circuit)
- KTY84 (with monitoring for wire breakage and short-circuit)
- PTC (with short-circuit monitoring)
- Bimetallic NC contact (without monitoring)

For the temperature sensor inputs, for each terminal block the evaluation can be parameterized for 1x2-wire, 2x2-wire, 3-wire or 4-wire conductors. There is no galvanic isolation in the TM150.

The TM150 is mounted in the control cabinet and can be snapped onto a mounting rail (IEC 60715).

The TM150 contains the following interfaces:

Table 7-44 Overview of the TM150 interfaces

Type	Quantity
DRIVE-CLiQ interfaces	2
Temperature sensor inputs	12
Electronics power supply	1

7.6.2 Safety instructions

⚠ WARNING

Non-observance of the safety instructions

If the safety instructions in Chapter 1 are not observed, accidents can occur involving severe injuries or death.

- Make sure that the safety instructions are observed.

⚠ WARNING

Fire through overheating due to insufficient ventilation clearances

Inadequate ventilation clearances cause overheating with a risk for personnel due to smoke and fire. This can also result in more downtimes and reduced service lives of the Terminal Module.

- For this reason, it is imperative that you maintain the 50 mm clearances above and below the Terminal Module.

NOTICE

Device failure as a result of unshielded or incorrectly routed cables to temperature sensors

Unshielded or incorrectly routed cables to temperature sensors can result in interference being coupled into the signal processing electronics from the power side. This can result in significant disturbance of all signals (fault messages) up to failure of individual components (destruction of the devices).

- Only use shielded cables as temperature sensor cables.
- If temperature sensor cables are routed together with the motor cable, use separately shielded cables twisted in pairs.
- Connect the cable shield at both ends to ground potential over a large surface area.

NOTICE

Damage through the use of incorrect DRIVE-CLiQ cables

Damage or malfunctions can occur on the devices or system when incorrect or unreleased DRIVE-CLiQ cables are used.

- Only use suitable DRIVE-CLiQ cables that have been released by Siemens for the respective application.

Note

Malfunctions due to polluted DRIVE-CLiQ interfaces

Malfunctions can occur in the system through the use of polluted DRIVE-CLiQ interfaces.

- Cover unused DRIVE-CLiQ interfaces with the supplied blanking covers.

7.6.3 Interface description

7.6.3.1 Overview

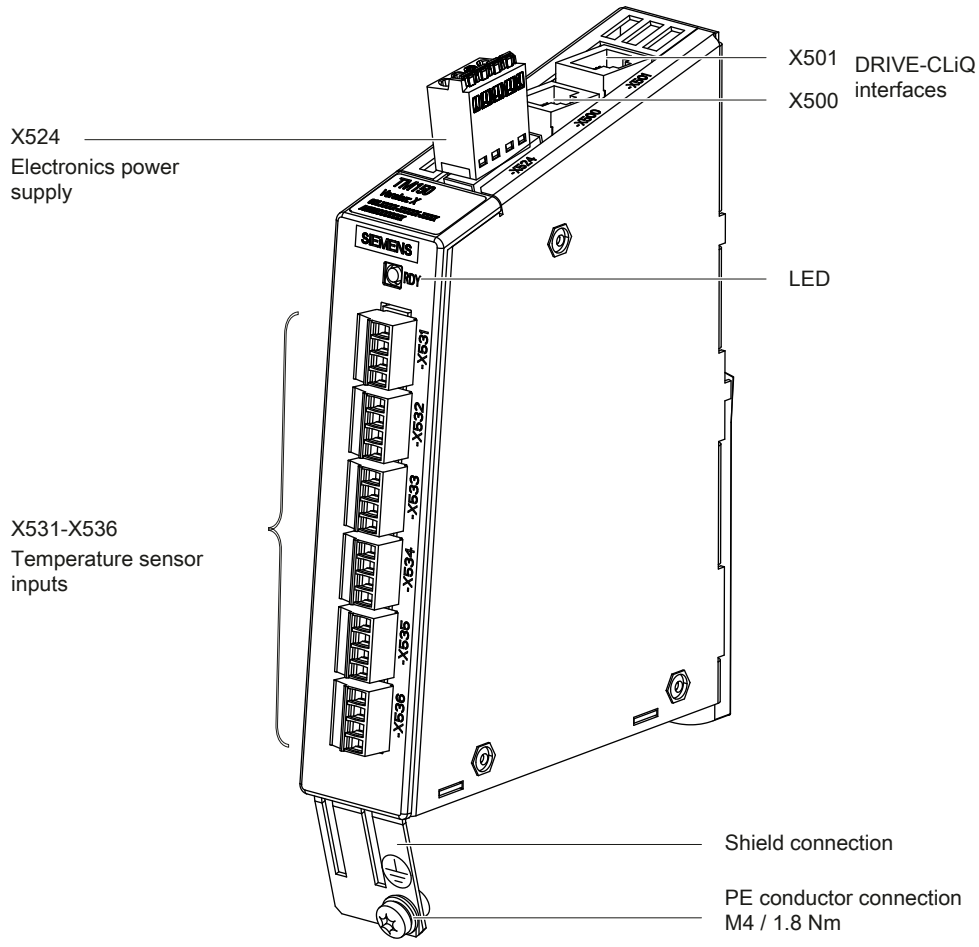

Figure 7-30 Interface overview of Terminal Module TM150

Terminal type

X524		
Terminal type	Spring-loaded terminal	
Connectable cable cross-sections	Rigid, flexible Flexible with conductor end sleeve without plastic sleeve Flexible with conductor end sleeve with plastic sleeve AWG / kcmil	0.2 ... 2.5 mm^2 0.25 ... 2.5 mm^2 0.25 ... 1.5 mm^2 24 ... 12
Stripped length	8 mm	
X531 - X536		
Terminal type	Spring-loaded terminal	

Connectable cable cross-sections	Rigid, flexible Flexible with conductor end sleeve without plastic sleeve Flexible with conductor end sleeve with plastic sleeve AWG / kcmil	0.2 ... 1.5 mm² 0.25 ... 1.5 mm² 0.25 ... 0.75 mm² 24 ... 16
Stripped length	10 mm	

7.6.3.2 X500/X501 DRIVE-CLiQ interfaces

Table 7-45 X500/X501: DRIVE-CLiQ interfaces

Connector	Pin	Signal name	Technical specifications
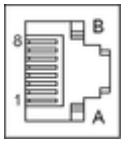	1	TXP	Transmit data +
	2	TXN	Transmit data -
	3	RXP	Receive data +
	4	Reserved, do not use	
	5	Reserved, do not use	
	6	RXN	Receive data -
	7	Reserved, do not use	
	8	Reserved, do not use	
	A	+ (24 V)	Power supply, max. 450 mA
	B	M (0 V)	Electronics ground

The blanking covers for the DRIVE-CLiQ interfaces are included in the scope of delivery.
Blanking covers (50 x) Article No.: 6SL3066-4CA00-0AA0

Note

The maximum DRIVE-CLiQ cable length is 100 m.

7.6.3.3 X524 Electronics power supply

Table 7-46 X524: Electronics power supply

Connector	Terminal	Designation	Technical specifications
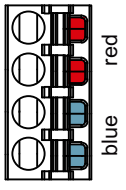	+	Electronics power supply	Voltage: 24 V DC (20.4 ... 28.8 V) Current consumption: max. 0.5 A [1] Max. current via jumper in connector: 20 A (15 A according to UL/CSA)
	+	Electronics power supply	
	M	Electronics ground	
	M	Electronics ground	

[1] Including DRIVE-CLiQ

The maximum cable length that can be connected is 30 m.

Note

The two "+" or "M" terminals are jumpered in the connector. This ensures that the supply voltage is looped through.

The current consumption increases by the value for the DRIVE-CLiQ node.

7.6.3.4 X531-X536 Temperature sensor inputs

Table 7-47 X531-X536: Temperature sensor inputs

Connector	Terminal	Function 1x2- / 2x2-wire	Function 3 and 4-wire	Technical specifications
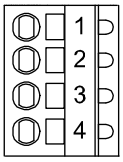	1	+ Temp (channel x)	+ (Channel x)	Temperature sensor connection for sensors with 1x2 wires Connection of the 2nd measurement cable for sensors with 4-wires
	2	- Temp (channel x)	- (Channel x)	Temperature sensor connection for sensors with 1x2 wires Connection of the 1st measurement cable for sensors with 3 and 4-wires.
	3	+ Temp (channel y)	+ I_c (constant current, positive channel x)	Temperature sensor connection for sensors with 2x2, 3 and 4-wires
	4	- Temp (channel y)	- I_c (constant current, negative channel x)	
Measuring current via temperature sensor connection: Approx. 0.83 mA				

When connecting temperature sensors with three wires, a jumper must be inserted between X53x.2 and X53x.4.

Table 7-48 Channel assignment

Terminal	Channel number [x] for 1x2, 3 and 4-wires	Channel number [y] for 2x2 wires
X531	0	6
X532	1	7
X533	2	8
X534	3	9
X535	4	10
X536	5	11

NOTICE

Motor damage due to incorrectly connected KTY temperature sensor

A KTY temperature sensor connected with incorrect polarity cannot detect if the motor overheats. Overheating may result in damage to the motor.

- Connect a KTY temperature sensor with the correct polarity.

NOTICE

Overheating of the motor through jumpering the temperature sensor connections

Jumpering of the temperature sensor connections "+ Temp" and "- Temp" results in incorrect measurement results. Damage to the motor can result if the overheating is not detected.

- When using several temperature sensors, separately connect the individual sensors to "+ Temp" and "- Temp".

NOTICE

Device failure as a result of unshielded or incorrectly routed cables to temperature sensors

Unshielded or incorrectly routed cables to temperature sensors can result in interference being coupled into the signal processing electronics from the power side. This can result in significant disturbance of all signals (fault messages) up to failure of individual components (destruction of the devices).

- Only use shielded cables as temperature sensor cables.
- If temperature sensor cables are routed together with the motor cable, use separately shielded cables twisted in pairs.
- Connect the cable shield at both ends to ground potential over a large surface area.

Note

Incorrect temperature measured values as a result of cables with an excessively high resistance

An excessively long cable length or an excessively small cable cross-section can falsify the temperature measurement (for a PT100, 10 Ω cable resistance can falsify the measurement result by 10%). As a consequence, excessively high measured values are output, which could lead to the motor being unnecessarily tripped prematurely.

- Use only cable lengths ≤ 300 m.
- For cable lengths >100 m, use cables with a cross-section of ≥1 mm^2.

7.6.4 Connection examples

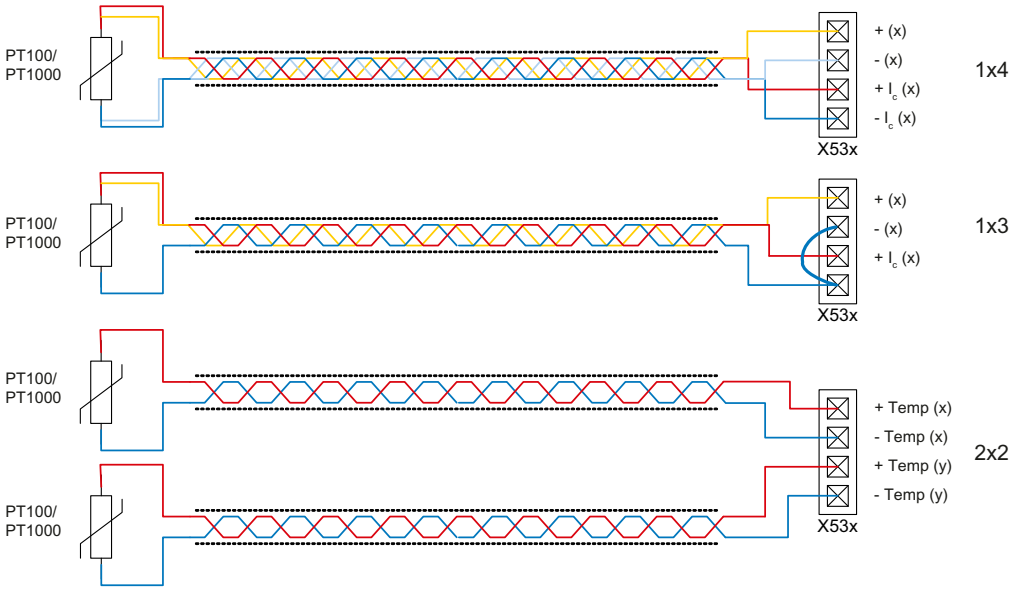

Figure 7-31 Connecting a PT100/PT1000 with 2x2, 3 and 4-wires to the temperature sensor inputs X53x of Terminal Module TM150

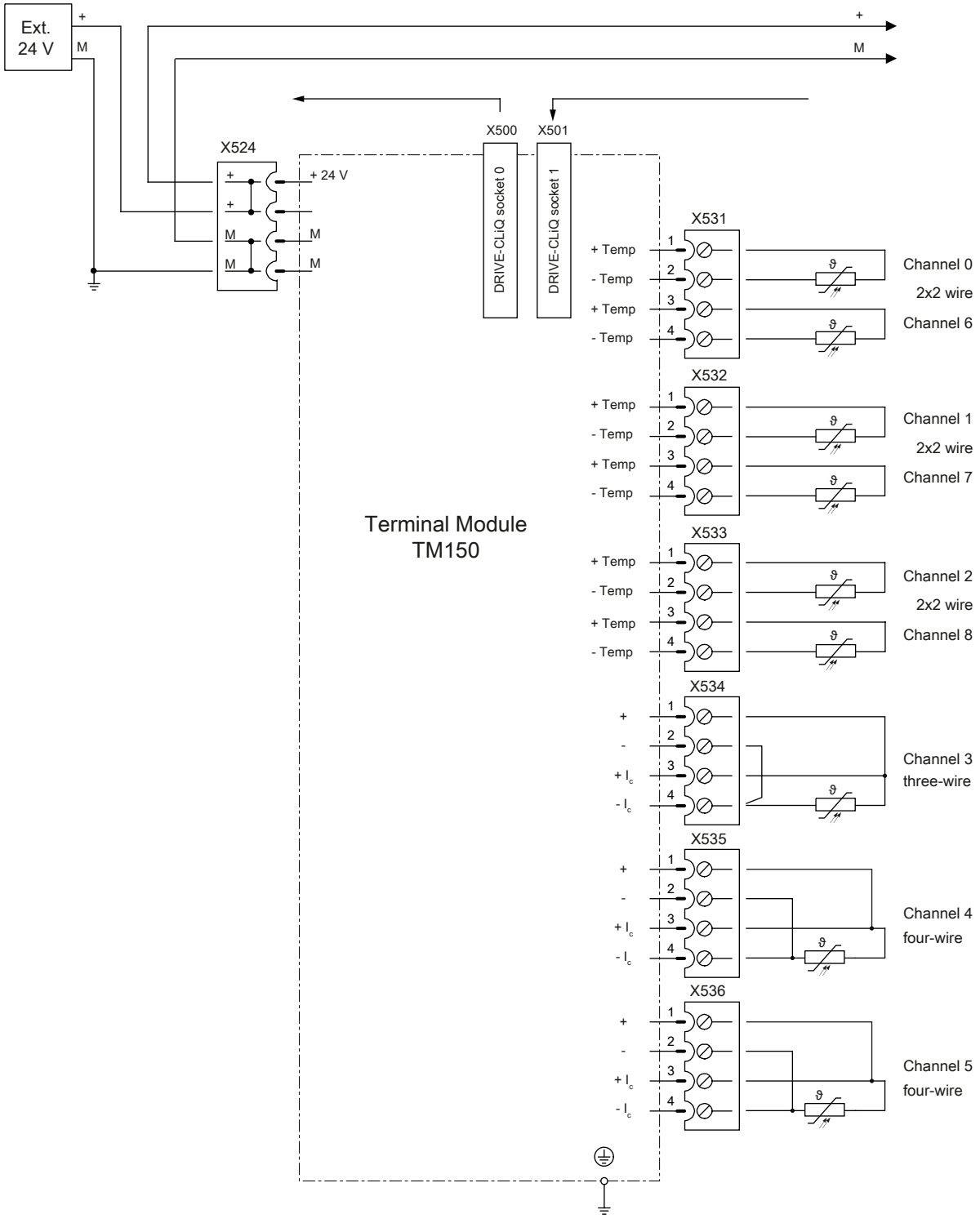

Figure 7-32 Connection example for a Terminal Module TM150

7.6.5 Meaning of the LED

Table 7-49 Meaning of the LEDs at the Terminal Module TM150

LED	Color	Status	Description, cause	Remedy
READY	–	Off	Electronics power supply is missing or outside permissible tolerance range.	Check power supply
	Green	Continuous light	The component is ready for operation and cyclic DRIVE-CLiQ communication is taking place.	–
	Orange	Continuous light	DRIVE-CLiQ communication is being established.	–
	Red	Continuous light	At least one fault is present in this component. **Remark:** LED is controlled irrespective of the corresponding messages being reconfigured.	Remove and acknowledge the fault.
	Green/ red	Flashing light 0.5 Hz	Firmware is being downloaded.	–
		Flashing light 2 Hz	Firmware has been downloaded. Wait for POWER ON.	Carry out a POWER ON.
	Green/ orange or red/ orange	Flashing light 2 Hz	Component recognition via LED is activated (p0154). **Remark:** Both options depend on the LED status when module recognition is activated via p0154 = 1.	–

Cause and rectification of faults

The following documents contain information about the cause of faults and how they can be rectified:

SINAMICS S120 Commissioning Manual with STARTER

SINAMICS DCM List Manual

7.6.6 Dimension drawing

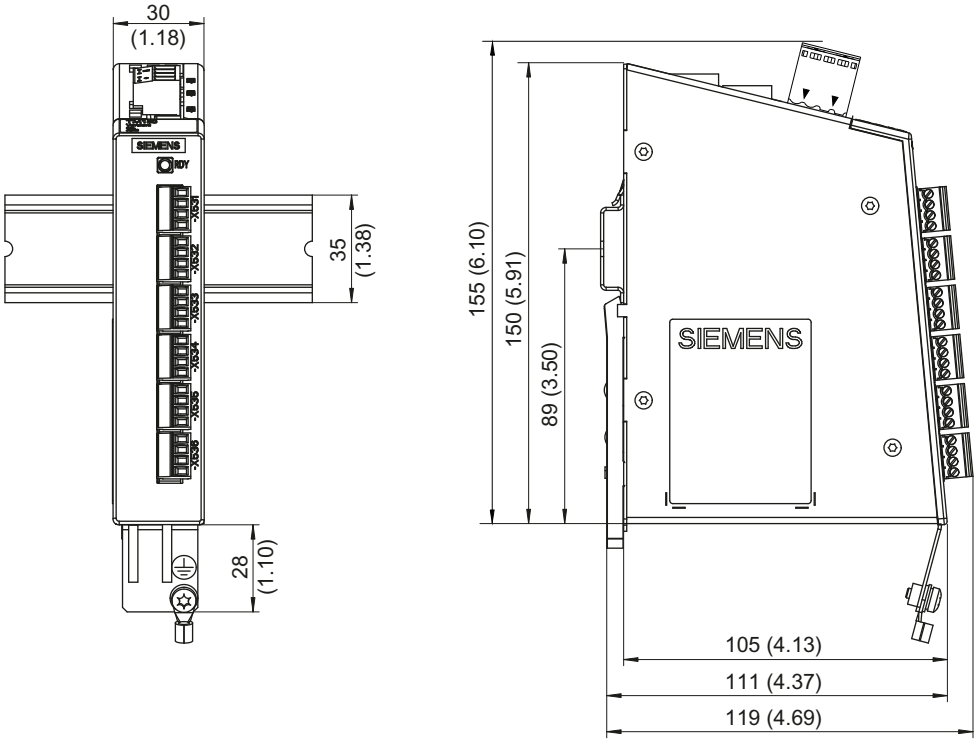

Figure 7-33 Dimension drawing of Terminal Module TM150, all data in mm and (inches)

7.6.7 Installation

Installation

1. Tilt the component backwards slightly and attach it to the mounting rail using the hooks.
2. Swivel the component onto the mounting rail until you hear the mounting slide at the rear latch into position.
3. Slide the components along the mounting rail to either the left or right up to their final position.

Removal

1. First shift the mounting slide downwards at the lug to release the interlocking with the mounting rail.
2. Swivel the component to the front and withdraw it upwards from the mounting rail.

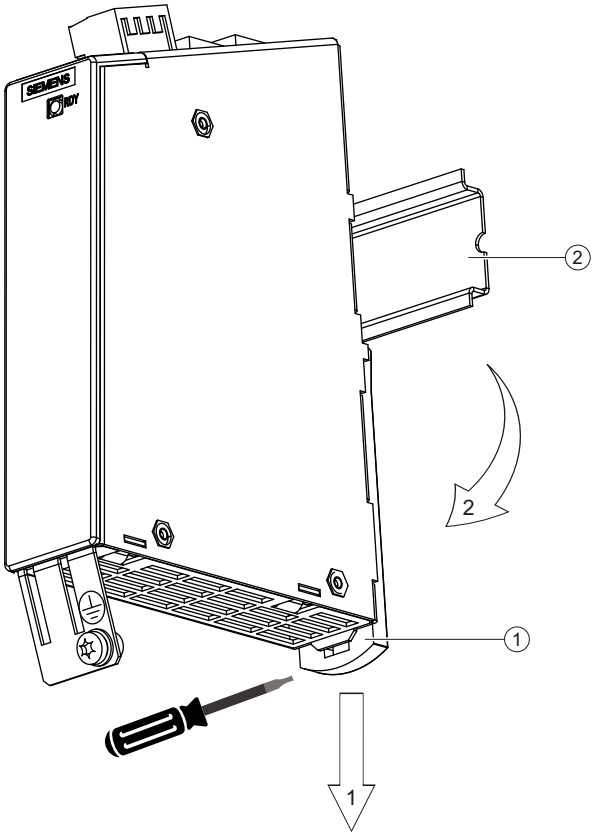

① Mounting slide
② Standard mounting rail

Figure 7-34 Removing a TM150 from a mounting rail

7.6.8 Protective conductor connection and shield support

The following diagram shows a typical Weidmüller shield connection clamp for the shield supports.

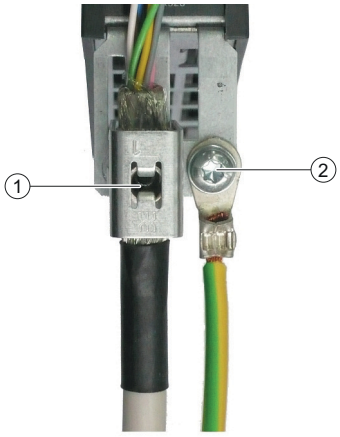

① Shield connection terminal, Weidmüller company, type: KLBUE CO1, Article number: 1753311001

② Protective conductor connection M4 / 1.8 Nm

Figure 7-35 Shield support and protective conductor connection

NOTICE
Damage or faulty operation due to incorrect shielding or impermissible cable lengths If the correct shielding procedures and the permissible cable lengths are not observed, the machine can be damaged or may malfunction. • Only use shielded cables. • Do not exceed the cable lengths stated in the technical data.

7.6.9 Technical data

Table 7-50 Technical data

6SL3055-0AA00-3LA0	**Unit**	**Value**
Voltage Current (without DRIVE-CLiQ) Power loss	V_{DC} A_{DC} W	24 (20.4 ... 28.8) ≤0.1 ≤2
PE/ground connection	At the housing with M4 / 1.8 Nm screw	
Maximum cable length	m	30
Weight	kg	0.4

Commissioning

8

⚠ WARNING

Not observing fundamental safety instructions and residual risks

The non-observance of the fundamental safety instructions and residual risks stated in Chapter 1 can result in accidents with severe injuries or death.

- Adhere to the fundamental safety instructions.
- When assessing the risk, take into account remaining risks.

Note

During a data save operation initiated by the user, the electronic power supply for the SINAMICS DCM must not be interrupted.

An active saving process is indicated by the following actions:

- The RDY-LED flashes (see Chapter "Description of the LEDs on the CUD (Page 609)")
- The BOP20 flashes

Interrupting the power supply while saving can lead to the loss of the current device parameter assignments. See also Chapter "Memory card functions (Page 329)".

8.1 Commissioning checklist

Preparation

- Read the safety instructions in Chapter "Safety instructions (Page 21)".
- Read Chapter "Transport, unpacking, installation (Page 47)".
- Read through the entire checklist together with another person before starting work on the device.
- Before commissioning the converter, as a minimum, check the following points:

Mechanical installation

Use the following checklist to guide you through the mechanical installation procedure for the device.

Note

Checking the checklist

Check the boxes accordingly in the right-hand column if the activity applies to the cabinet unit in your scope of supply. In the same way, check the boxes once you have finished the installation procedure to confirm that the activities are complete.

Item	Activity	Available	Completed
1	The device is properly mounted on a vertical wall/panel made of non-flammable material.	☐	☐
2	All shield connections are tight (see Chapter "Connecting (Page 67)").	☐	☐
3	All cable connections are tight (see Chapter "Connecting (Page 67)").	☐	☐
4	The ambient conditions are complied with (see Chapter "Environmental conditions (Page 43)").	☐	☐
5	The cooling air can flow unobstructed.	☐	☐
6	The motor and the driven machine are ready to run.	☐	☐

Electrical installation

Use the following checklist to guide you through the electrical installation procedure for the device.

Note

Checking the checklist

Check the boxes accordingly in the right-hand column if the activity applies to the cabinet unit in your scope of supply. In the same way, check the boxes once you have finished the installation procedure to confirm that the activities are complete.

Item	Activity	Available	Completed
1	The converter devices have been properly grounded.	☐	☐
2	The line connections (1U1, 1V1, 1W1), motor connections (1C1, 1D1) and the field connections (3C, 3D) are correctly established.	☐	☐
3	All control cables have been correctly connected (see Chapter "Connecting (Page 67)").	☐	☐
4	The correct commutating reactors have been installed and connected (see Chapter "Commutating reactors (Page 123)").	☐	☐
5	The correct semiconductor protection fuses and cable protection fuses have been installed (see Chapter "Fuses (Page 127)").	☐	☐
6	There are no tools, foreign bodies or metal chips in the converter.	☐	☐
7	The correct covers are in place and correctly mounted.	☐	☐

Item	Activity	Available	Completed
8	A higher-level Emergency Stop device to avoid hazardous situations is absolutely mandatory for all applications. This is available, is functioning and is operational.	☐	☐
9	The line supply voltage is the same as the rated input voltage of the converter.	☐	☐
10	A clockwise phase sequence is connected at the fan power supply (4U1, 4V1, 4W1). (connection is only available only for devices with radial fan (3~AC 400 V)). The fan rotates counterclockwise when viewed from above.	☐	☐
11	If the digital inputs for ON/OFF1 OR operating enable (X177 terminal 12 or 13) are not used on the hardware side, they must be permanently supplied with +24 V.	☐	☐

Restoring the factory settings

The commissioning steps listed in "Commissioning using the BOP20 Operator Panel (Page 246)", "Commissioning using the AOP30 Operator Panel (Page 253)" and "Commissioning with the STARTER commissioning tool (Page 259)" assume that all parameters are set to the factory settings. This is the case when the device is initially shipped. If the parameters have already been changed, or if you are not certain that all of the parameters are at their factory settings, then run the "Restore factory setting" function!

With the basic operator panel BOP20:
(1)p0009 = 30
(1)p0976 = 1
SINAMICS DCM resets all of the parameters to the factory setting, and executes a power on. The parameters must then be permanently saved by pressing the P button for a longer period of time (at least 3 seconds, however until the display starts to flash).

8.2 Switching on

The drive runs up after the device is switched on (POWER ON) Running-up to operating state 7.0 in the SINAMICS DCM with the parameters saved (RAM to ROM was carried out) takes approx. 45 s. Power-up without the saved parameters (first commissioning) takes approx. 60 s.

Table 8-1 SINAMICS DCM ramp-up times

BOP20 display	LED status CUD	Ramp-up time [1]
Light on the BOP20	RDY: Red DP1: Red	POWER ON
-	RDY: orange DP1: -	15 s
Display "run up"	RDY: orange DP1: -	35 s
Operating state 12.4	RDY: Green DP1: -	40 s
Operating state 7.0	RDY: Green DP1: -	45 s
[1] Running-up with saved parameters (RAM to ROM was carried out)		

The status of the LEDs on the CUD (see also Chapter "Description of the LEDs on the CUD (Page 609)") are only visible when the device cover is open.

Note

If options are being used (DCC, CBE20, SMC10, SMC30, TM15, TM31, TM150 etc.) and in the case of certain device configurations, the duration of the run-up increases.

Note

If an external memory card with previously saved data is inserted into the drive during run-up, the drive powers up based on the parameter assignments saved on the card (see also Chapter "Memory card functions (Page 329)").

8.3 Commissioning using the BOP20 Operator Panel

8.3.1 Requirements

Fundamentals of SINAMICS

If you are not yet familiar with SINAMICS basics (parameters, drive objects, BICO technology, etc.), please read Chapter “Basic information (Page 321)” before starting commissioning.

BOP20 operator panel

If you are not yet familiar with the BOP20 operator panel, please read Chapter "Parameterizing using the BOP20 (Basic Operator Panel 20) (Page 339)" before starting commissioning.

Parameter notation

Expressed in full, a parameter consists of
the drive object + parameter number + index, with the following notation

(oo)pxxxxx[ii]	for indexed parameters
(oo)pxxxxx	for non-indexed parameters

To make these easier to read, in this chapter the drive object specification has been omitted from all parameters belonging to the "Drive control" drive object (= drive object 2).
For example, the specification p50076[1] refers to parameter (2)p50076[1] (= drive object 2, parameter 50076, index 1).

8.3.2 Commissioning steps

Note

Parameter with [D] depend on a data set. Commissioning must be carried out for each data set.

〈1〉 Access authorization

In order to be able to set the access authorization, drive object 1 (DO1) must be activated at the BOP20, see Chapter "Displays and operation with the BOP20 (Page 342)".

Access level
(1)p0003 = 1 Standard
(1)p0003 = 2 Advanced
(1)p0003 = 3 Expert

〈2〉 Define the external power unit

p51819[0]	Transformation ratio for armature voltage transformer
p51819[1]	Transformation ratio for field voltage transformer
p51820	Rated armature supply voltage
p51821[0]	Connection of line measurement cables
p51821[1]	Connection of armature measurement cables
p51822	Rated armature DC current
p51823	Load voltage at rated armature current
p51824	Current transformer configuration
p51825	Type of power unit
p51826[0]	Length of first pulse
p51826[1]	Length of other pulses
p51829	Heat sink temperature threshold
p51830	Sensor for heat sink temperature
p51831	Fuse monitoring
p51832	Monitoring of device fan
p51833	External fault
p51834	Source of fan relay output
p51835[0]	Monitoring of device fan's ON delay
p51835[1]	Fault involving device fan's ON delay
p51835[2]	Alarm involving device fan's ON delay

〈3〉 Adjust the rated device currents

The **rated armature DC current for the device** must be adjusted by setting p50076[0] (in %) or p50067 if:

Maximum armature current < 0.5 × rated armature DC current for the device

The **rated field DC current for the device** must be adapted by setting p50076[1] (in %) if:

Maximum field current < 0.5 × rated field DC current for the device

It is recommended to always adjust parameter p50076.x. As many display parameters in % relate to the rated device current, these are re-standardized by adjusting the armature or field current of the motor. This enables better interpretation of them, e.g. in the trace.

〈4〉 Adjust to the actual device supply voltage

p50078[0]	Rated value for armature supply voltage (in volts)
p50078[1]	Rated value for field supply voltage (in volts)

〈5〉 Enter the motor data

The motor data must be entered into the following parameters as specified on the motor rating plate (see also the Chapter "Thermal overload protection for the DC motor (I2t monitoring of the motor) (Page 562)" and "Speed-dependent current limiting (Page 567)").

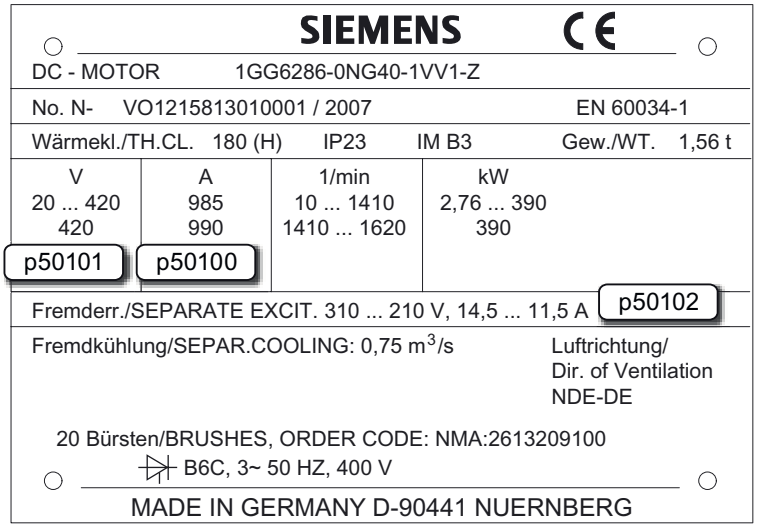

Figure 8-1 Example of a rating plate

p2003	Rated torque = (kW x 9555) / rated speed
p50100[D]	Rated armature current (in amperes)
p50101[D]	Rated armature voltage (in volts)
p50102[D]	Rated excitation current (in amperes)
p50104[D]	Speed n1 (in rpm)
p50105[D]	Armature current I1 (in amperes)
p50106[D]	Speed n2 (in rpm)
p50107[D]	Armature current I2 (in amperes)
p50108[D]	Maximum operating speed n3 (in rpm)

p50109[D] 1 = Speed-dependent current limitation active

p50114[D] Motor thermal time constant (in seconds)

〈6〉 Data for actual speed value acquisition

〈6.1〉 Operation with analog tachometer

p50083[D] = 1 The actual speed value comes from the "Main actual value" (r52013) channel (terminals XT.103, XT.104).

p50741[D] Tachometer voltage at maximum speed (– 270.00 to +270.00 V)

Remark:
The value set here determines the 100% speed for the closed-loop speed control.

p2000 Speed in rpm for tachometer voltage set on p50741[0]

Comment 1:
Parameter p2000 is used to convert from a "physical speed" (rpm) into a "relative speed" (%) and vice versa.

This conversion is required for:

- Speed setpoint input via the control panel in STARTER
- Speed setpoint input via the operating screen form at the AOP30
- Calculating the display values r020, r021, r060 and r063

Remark 2:
Parameter p2000 and parameters r020, r021, r060 and r063 are not data-set dependent. This is the reason why the physical speed can only be displayed correctly for one data set (DDS).

〈6.2〉 Operation with pulse encoder

p50083[D] = 2 The actual speed value comes from a pulse encoder (r0061) connected to terminal block X177.

p0400[0] Encoder type selection

p2000 Speed in rpm at 100% speed

Remark:
The value set here determines the 100% speed for the closed-loop speed control.

〈6.3〉 Operation without tachometer (closed-loop EMF control)

p50083[D] = 3 The actual speed value comes from the "Actual EMF value" channel (r52287), but is evaluated with p50115.

p50115[D] EMF at 100% speed
(1.00 to 140.00% of device rated supply voltage (p50078[0]))

Remark:
The value set here determines the 100% speed for the closed-loop speed control.

p2000 Speed in rpm for EMF set on p50115[0]

Comment 1:
Parameter p2000 is used to convert from a "physical speed" (rpm) into a "relative speed" (%) and vice versa.

This conversion is required for:

- Speed setpoint input via the control panel in STARTER
- Speed setpoint input via the operating screen form at the AOP30
- Calculating the display values r020, r021, r060 and r063

Remark 2:
Parameter p2000 and parameters r020, r021, r060 and r063 are not data-set dependent. This is the reason why the physical speed can only be displayed correctly for one data set (DDS).

〈6.4〉 Freely-wired actual value

p50083[D] = 4 The actual value input is defined with p50609[C]

p50609[C] Number of the parameter that is switched to the actual speed controller value

p2000 Speed in rpm at which the parameter selected on p50609[0] accepts the value 100%

Comment 1:
Parameter p2000 is used to convert from a "physical speed" (rpm) into a "relative speed" (%) and vice versa.

This conversion is required for:

- Speed setpoint input via the control panel in STARTER
- Speed setpoint input via the operating screen form at the AOP30
- Calculating the display values r020, r021, r060 and r063

Remark 2:
Parameter p2000 and parameters r020, r021, r060 and r063 are not data-set dependent. This is the reason why the physical speed can only be displayed correctly for one data set (CDS).

〈6.5〉 Operation with pulse encoder and SMC30

p50083[D] = 5 The actual speed value comes from a pulse encoder connected to an SMC30 (r3770).

p0400[1] Encoder type selection

p2000 Speed in rpm at 100% speed

Remark:
The value set here determines the 100% speed for the closed-loop speed control.

〈6.6〉 Operation with resolver and SMC10

p50083[D] = 5 A DRIVE-CLiQ encoder supplies the speed actual value

p0400[1] Encoder type selection

p2000 Speed in rpm at 100 % speed
Comment:
The value set here defines the 100 % speed for the closed-loop speed control.

〈7〉 Data for field

〈7.1〉 Control of the field

p50082 = 0 Internal field is not used
(e.g. in the case of permanent-magnet motors)

p50082 = 1 The field is activated with the line contactor
(field pulses are activated or deactivated at the same time as the line contactor)

p50082 = 2 Automatic switching-in of the standstill field set using p50257 after a time that can be parameterized using p50258 has elapsed, once operating state o7 or higher has been reached

p50082 = 3 Field current permanently switched on

p50082 = 4 Field with Auxiliaries ON signal activated

〈7.2〉 Field weakening

p50081 = 0 No speed-dependent or EMF-dependent field weakening

p50081 = 1 Field-weakening operation by means of internal closed-loop EMF control, i.e. at speeds above the motor's rated speed (= "cut-in speed"), the motor EMF is constantly kept at setpoint EMFset (r52289) = p50101 – p50100 x p50110

〈8〉 Set basic technological functions

〈8.1〉 Current limits

p50171[D] System current limit in torque direction I (as % of p50100)

p50172[D] System current limit in torque direction II (as % of p50100)

〈8.2〉 Torque limits

p50180[D] Torque limit 1 in torque direction I
(as % of rated motor torque)

p50181[D] Torque limit 1 in torque direction II
(as % of rated motor torque)

〈8.3〉 Ramp-function generator

p50303[D] Ramp-up time 1 (in seconds)

p50304[D] Ramp-down time 1 (in seconds)

p50305[D] Initial rounding 1 (in seconds)

p50306[D] Final rounding 1 (in seconds)

〈9〉 Complete quick commissioning

Set p3900 = 3.

This triggers the calculation of the motor data (Ra, La, Lf) as well as the calculation of the controller parameters resulting from the data that was entered in the previous steps.

p3900 is then reset to 0 and quick commissioning is ended, i.e. p0010 is reset to 0.

〈10〉 Execute optimization runs

Perform the optimization runs one after the other:

p50051 = 23	Optimization of closed-loop armature current control for inductive load
p50051 = 24	Optimization of closed-loop field-current control
p50051 = 25	Optimization of closed-loop armature current control
p50051 = 26	Optimization of closed-loop speed control
p50051 = 27	Optimization of closed-loop EMF control (incl. field characteristic recording)
p50051 = 28	Recording the friction characteristic
p50051 = 29	Optimization of closed-loop speed control for drives with a mechanical system capable of oscillation

For further details, see Chapter "Drive optimization (Page 308)".

If an optimization run is not carried out, the motor control uses the motor characteristic values calculated from the rating plate data instead of the measured values.

⚠ WARNING

Unexpected motor movement during optimization runs

Optimization runs cause movement of the drive which can result in death, severe injury or material damage.

- Observe the general safety instructions.
- Ensure that the EMERGENCY STOP functions are fully functional when commissioning the drive.

〈11〉 Checking and potential fine adjustment of maximum speed

Once the optimization runs have been executed, the maximum speed needs to be checked and, if necessary, the setting for it corrected.

If the maximum speed has now shifted by more than around 10%, the control response of the speed control loop will need to be checked; it may be necessary to repeat the optimization run for the speed controller or carry out re-optimization manually.

The optimization run for field weakening and for friction and moment of inertia compensation must be repeated if there is any change to the maximum speed.

〈12〉 Checking the drive settings

The optimization runs do not produce the best results for every application, so in all cases it is necessary to check the controller settings using the appropriate tools (oscilloscope, STARTER trace, and so on). Some cases may require manual re-optimization.

〈13〉 Manual (re-)optimization (where required)

If the result of the optimization runs is not satisfactory, then manual post or new optimization can be performed.

The procedure is described in Chapter "Manual optimization (Page 315)".

〈14〉 Saving non-volatile set values

Previously, all changes in the set values were made in the RAM (Random Access Memory). If the device is switched off in this state, all settings made previously are lost. To permanently store the settings in the ROM (non-volatile memory), a RAM to ROM must be triggered by setting p0977 to 1 (p0977 is allocated to the DO 1). While data is being saved, the BOP20 flashes (and the RDY-LED on the CUD also flashes); this takes approx. 45 s. After the save operation the settings are backed up in the ROM.

The drive can now be switched off (POWER OFF) without losing the settings that have been made. See also Chapter "Memory card functions (Page 329)".

〈15〉 Documentation of set values

The following facilities are available to document the executed settings outside the device:

- External memory card was inserted during the RAM to ROM (p0977 = 1). The parameters were therefore also transferred to the external CompactFlash Card.
- Write the parameters to a CompactFlash Card (p0804).
- Document the parameters in a STARTER project (load to PG). See also Chapter "Memory card functions (Page 329)" and "Commissioning with the STARTER commissioning tool (Page 259)".

8.4 Commissioning using the AOP30 Operator Panel

8.4.1 First commissioning

Note

To operate the AOP30, p2030=3 must be set.

8.4.1.1 Running-up for the first time

Start screen

When the system is switched on for the first time, the Control Unit (CUD) is initialized automatically. The following screen is displayed:

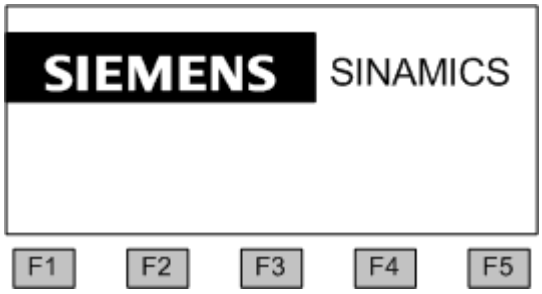

Figure 8-2 Splash screen

While the system is powering up, the parameter descriptions are loaded to the operator panel (remark: The memory card does not have to be inserted)

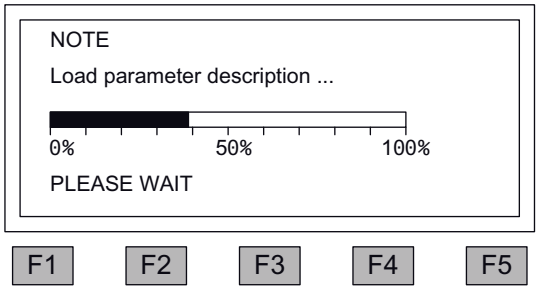

Figure 8-3 Loading of the parameter description during the system power-up

Selecting the language

When the system is first powered up, a screen for selecting the language appears.

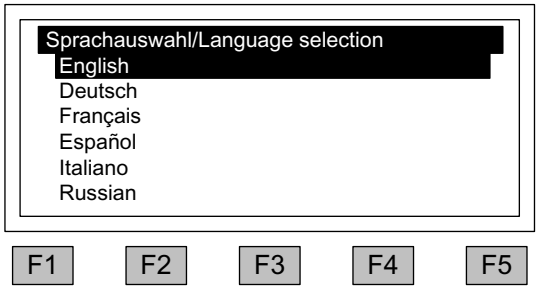

You can select the language in the dialog screen.

To change the language, use <F2> or <F3>.
To select the language, use <F5>.

Once the language has been selected, the powering-up process continues.

Once the system has successfully powered up, the drive has to be commissioned when the system is switched on for the first time after it has been delivered. The converter can then be switched on.

When the system is then powered up again, it can be operated immediately.

Navigation within the dialog screens

Within a dialog screen, the selection boxes can usually be selected using the <F2> and/or <F3> keys. Selection boxes are generally texts surrounded by a frame. When they are selected, they are highlighted by means of white text on a black background.
The current value of a highlighted selection box can usually be changed by pressing <F5> "OK" and/or "Change". Another entry field then appears; the value you want can be entered directly in this using the numerical keypad or can be selected from a list.

In the wizard, you can change from a dialog screen to the next or previous screen by selecting the "Continue" or "Back" selection boxes and then confirming by pressing <F5> "OK". If a screen contains particularly important parameters, the selection box "Continue" only appears at the bottom of the screen. This is because every single parameter in this dialog screen has to be checked thoroughly and/or corrected before the next screen can be accessed.

8.4.1.2 Full drive commissioning

Entering power unit data

p51819[0]	Transformation ratio for armature voltage transformer
p51819[1]	Transformation ratio for field voltage transformer
p51820	Rated armature supply voltage
p51821[0]	Connection of line measurement cables
p51821[1]	Connection of armature measurement cables
p51822	Rated armature DC current
p51823	Load voltage at rated armature current
p51824	Current transformer configuration
p51825	Type of power unit
p51826[0]	Length of first pulse
p51826[1]	Length of other pulses
p51829	Heat sink temperature threshold
p51830	Sensor for heat sink temperature
p51831	Fuse monitoring
p51832	Monitoring of unit fan
p51833	External fault
p51834	Source of fan relay output
p51835[0]	Monitoring of unit fan's ON delay
p51835[1]	Fault involving unit fan's ON delay
p51835[2]	Alarm involving unit fan's ON delay

Adjust the rated device currents

The **rated armature DC current for the device** must be adjusted by setting p50076[0] (in %) or p50067 if:

Maximum armature current < 0.5 × rated armature DC current for the device

The **rated field DC current for the device** must be adapted by setting p50076[1] (in %) if:

Maximum field current < 0.5 × rated field DC current for the device

Adapt to the actual device supply voltage

p50078[0]	Rated value for armature supply voltage (in volts)
p50078[1]	Rated value for field supply voltage (in volts)

Acquiring the motor data

The motor data can be taken from the motor rating plate.

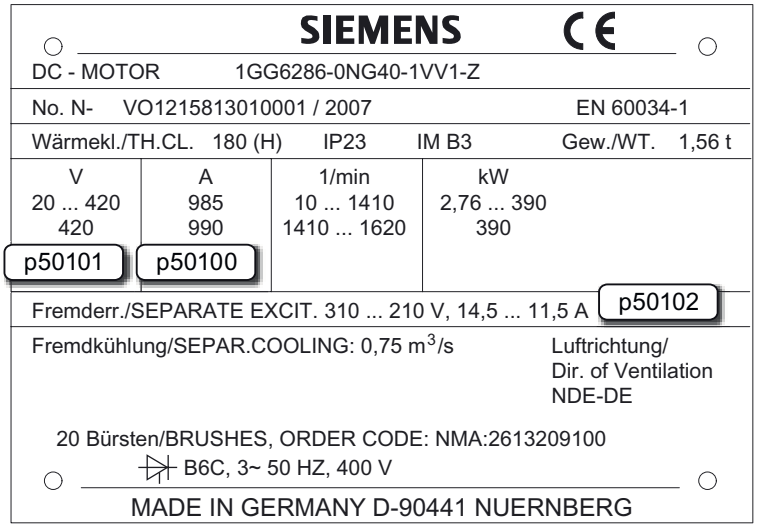

Figure 8-4 Example of a rating plate

p2003	Rated torque = (kW x 9555) / rated speed
p50100[D]	Rated armature current
p50101[D]	Rated armature voltage
p50102[D]	Rated excitation current
p50103[D]	Minimum excitation current (optional)
p50114[D]	Thermal time constant for motor See the section titled "Thermal overload protection for the DC motor (I2t monitoring of the motor)"

When you have finished entering the motor data, select "Next" below the final parameter value and activate with <F5> (OK).

Encoder selection

p50083[D]	Speed controller actual value selection

Analog tachometer screen

p50741[D]	Tachometer voltage at maximum speed
p2000	Reference speed

Pulse encoder screen

p0400[E]	Encoder type selection
p0404[E]	Encoder configuration active
p0405[E]	Square-wave encoder A/B
p0408[E]	Rotary encoder pulse no.
p2000	Reference speed

EMF controlled screen

p50115[D]	EMF at maximum speed
p2000	Reference speed

Freely wired screen

p50609[C]	Speed controller actual value signal source
p2000	Reference speed

DRIVE-CLiQ encoder screen

p0400[E]	Encoder type selection
p0404[E]	Encoder configuration active
p0405[E]	Square-wave encoder A/B
p0408[E]	Rotary encoder pulse no.
p2000	Reference speed

Data on field

p50081	Field weakening
p50082	Field operating mode

Basic commissioning

p50171	Current limit, torque direction I
p50172	Current limit, torque direction II
p50180	Torque limit I
p50181	Torque limit II
p50303	Ramp-up time 1
p50304	Ramp-down time 1
p50305	Initial rounding 1
p50306	Final rounding 1

Final confirmation

Confirm the parameters you have entered to save them. Once you have selected "Next" and activated your entries with <F5>, the parameters you entered will be permanently saved and the calculations required for closed-loop control carried out.

Optimization runs

Perform the optimization runs one after the other:

To navigate through the selection boxes, choose <F2> or <F3>.
To activate a selection, choose <F5>.

p50051 = 23	Optimization of closed-loop armature current control for inductive load
p50051 = 24	Optimization of closed-loop field-current control
p50051 = 25	Optimization of closed-loop armature current control
p50051 = 26	Optimization of closed-loop speed control
p50051 = 27	Optimization of closed-loop EMF control (incl. field characteristic recording)
p50051 = 28	Recording the friction characteristic
p50051 = 29	Optimization of closed-loop speed control for drives with a mechanical system capable of oscillation

For further details, see Chapter "Drive optimization (Page 308)".

If an optimization run is not carried out, the motor control uses the motor characteristic values calculated from the rating plate data instead of the measured values.

⚠ WARNING

Unexpected motor movement during optimization runs

Optimization runs cause movement of the drive which can result in death, severe injury or material damage.

- Observe the general safety instructions.
- When commissioning, carefully ensure that all shutdown functions and (if available) STO-/SS1-t functions are fully functional.

8.4.2 Status after commissioning

LOCAL mode (control via operator panel)

- You switch to LOCAL mode by pressing the "LOCAL/REMOTE" key.
- Control (ON/OFF) is carried out via the "ON" and "OFF" keys.
- You can set the setpoint using the "Increase" and "Decrease" keys or by entering the appropriate numbers on the operation screen using the numeric keypad.

8.4.3 Parameter reset to factory settings

The factory settings represent the defined original status of the device on delivery.

Resetting the parameters to the factory settings means that all the parameter settings made since the system was delivered are reset.

Setting the parameter filter to "Parameter reset"

<MENU> <Commissioning/Service> <OK> <Device commissioning> <OK> <30: Parameter Reset> <OK>

Restoring all parameters to their factory settings

All of the unit parameters are reset to their factory settings. The AOP30 is powered down and back up again during this process.

8.5 Commissioning with the STARTER commissioning tool

8.5.1 STARTER commissioning tool

Description

You can use the STARTER commissioning tool to configure and commission your SINAMICS drives or drive systems. The drive configuration can be performed with the aid of the STARTER wizard for drive configuration.

Note

This chapter described how to commission with STARTER. STARTER has a comprehensive online help that explains in detail all of the sequences and setting options in the system. This is the reason that this chapter is restricted to the individual commissioning steps.

Prerequisites for installing STARTER

STARTER is installed on a PG / PC. The hardware and software preconditions are described in the readme file for STARTER.

Note

The SIMOTION SCOUT engineering tool includes the STARTER functionality to commission drives.

From version V4.2, SCOUT has also been released for commissioning SINAMICS DCM.

8.5.1.1 Installing the STARTER commissioning tool

Download STARTER here: STARTER download (https://support.industry.siemens.com/cs/de/en/ps/13437/dl).

STARTER is installed using the "setup" file. When you double-click the "Setup" file, the installation wizard guides you through the process of installing STARTER.

8.5.1.2 Layout of the STARTER user interface

STARTER provides these 4 operating areas:

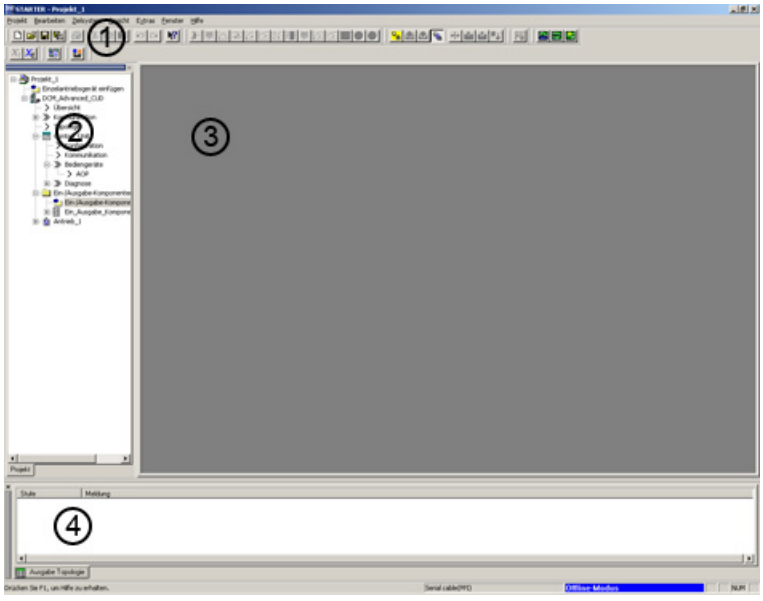

Figure 8-5 STARTER operating areas

Operating area	Explanation
① Toolbars	In this area, you can access frequently used functions by clicking icons.
② Project navigator	The elements and objects contained in the project are displayed in this area.
③ Working area	Changes to the drive units are made in this area.
④ Detail view	This area displays detailed information, for instance about faults and alarms.

8.5.2 Procedure for commissioning with STARTER

Basic procedure when using STARTER

STARTER uses a series of interactive screens to enter the data required for the drive unit.

Note

The interactive screens are pre-assigned defaults that you need to adapt to your application and configuration under certain circumstances.

This is a deliberate procedure!
Target: By taking time to consider what configuration data you enter, you can prevent inconsistencies between the project data and drive unit data (identifiable in online mode).

8.5.2.1 Creating the project

Click the STARTER icon on the desktop, or select the menu command Start > Simatic > STEP 7 > STARTER in the Microsoft Windows Start menu to open the STARTER commissioning tool.

The first time you run the software, the main screen shown below appears with the dialog screen forms:

- STARTER Getting Started Drive Commissioning
- STARTER Project Wizard

The commissioning steps are listed below as numbered step sequences.

Accessing the STARTER project wizard

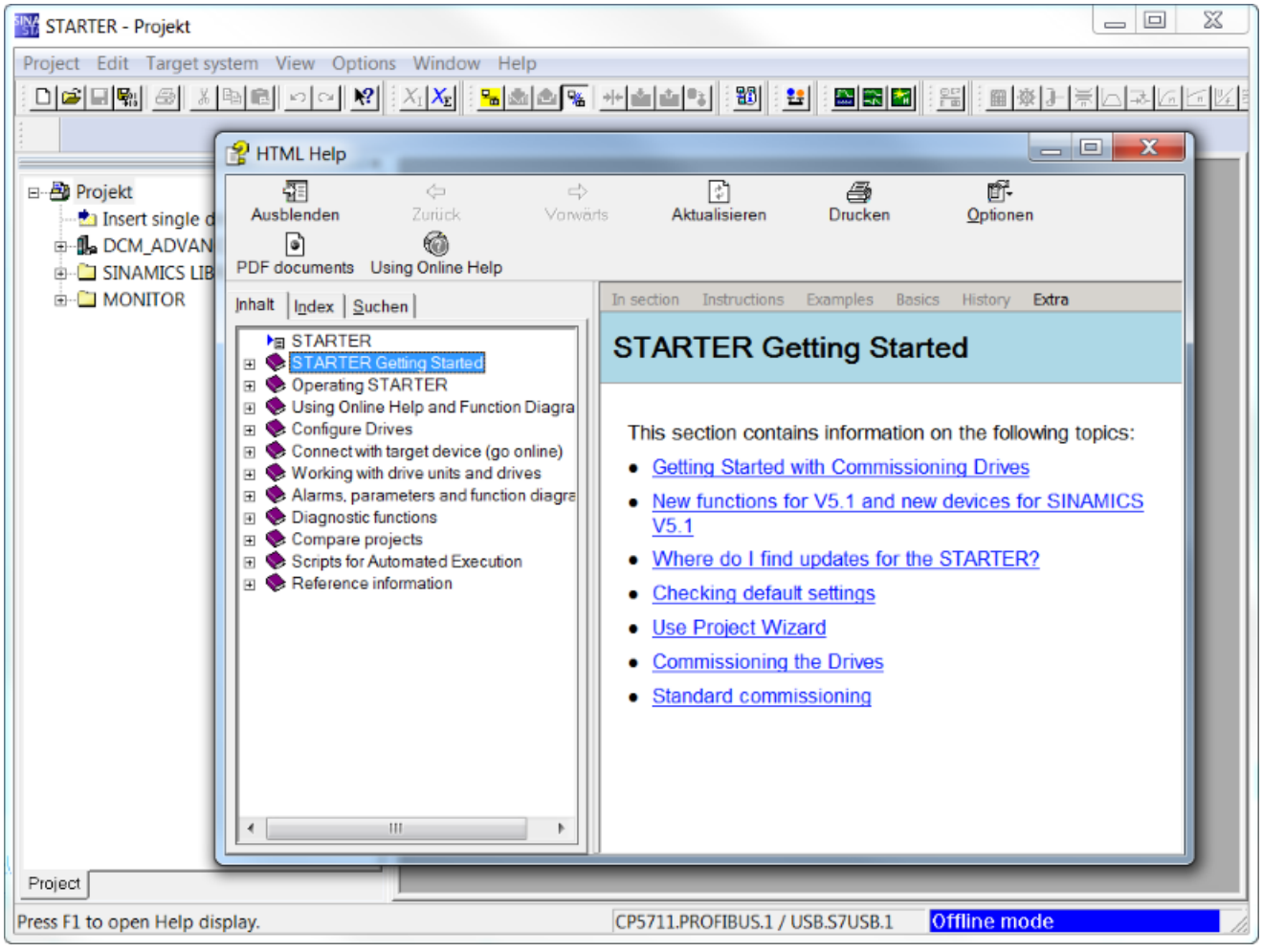

Figure 8-6 Main screen of the STARTER parameter assignment and commissioning tool

⇒ Hide "STARTER Getting Started Drive Commissioning" with **HTML Help > Close**

Note

When you deactivate the **Display wizard during start** checkbox, the project wizard is no longer displayed the next time you start STARTER.

You can call up the project Wizard by choosing **Project > New with Wizard**.

To deactivate the **Getting Started** online help, follow the information provided in help.

Online help can be restarted at any time via **Help > Getting Started**.

STARTER features a detailed online help function.

The STARTER project wizard

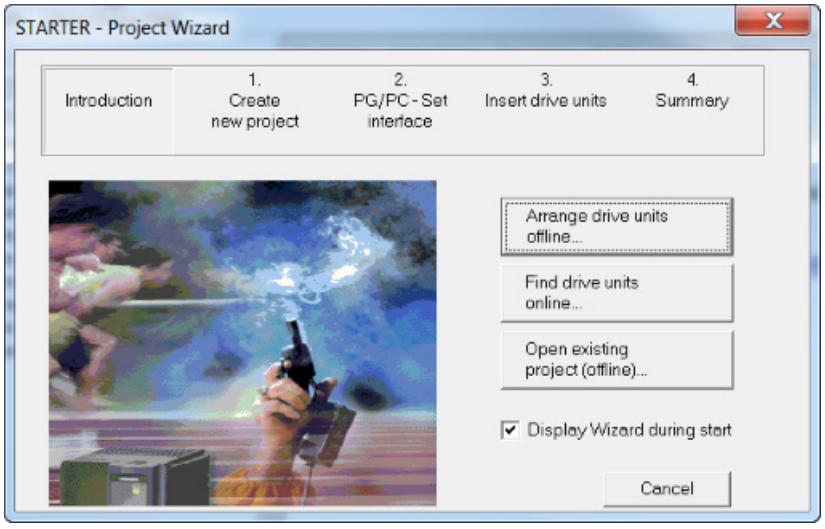

Figure 8-7 STARTER project wizard

⇒ Click **Arrange drive units offline...** in the STARTER project wizard

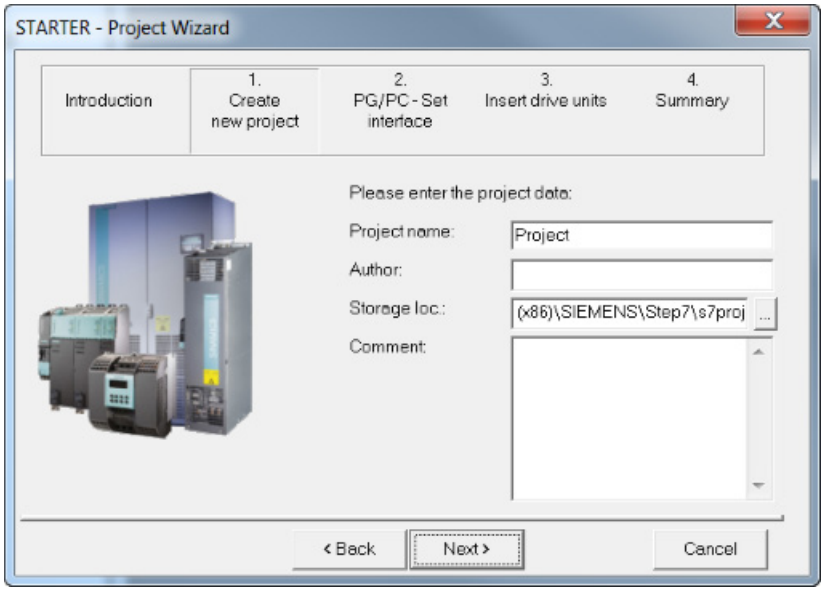

Figure 8-8 Creating a new project

⇒ Enter a **project name** and, if necessary, the **author, memory location** and a **comment**.

⇒ Click **Next >** to set up the PG/PC interface.

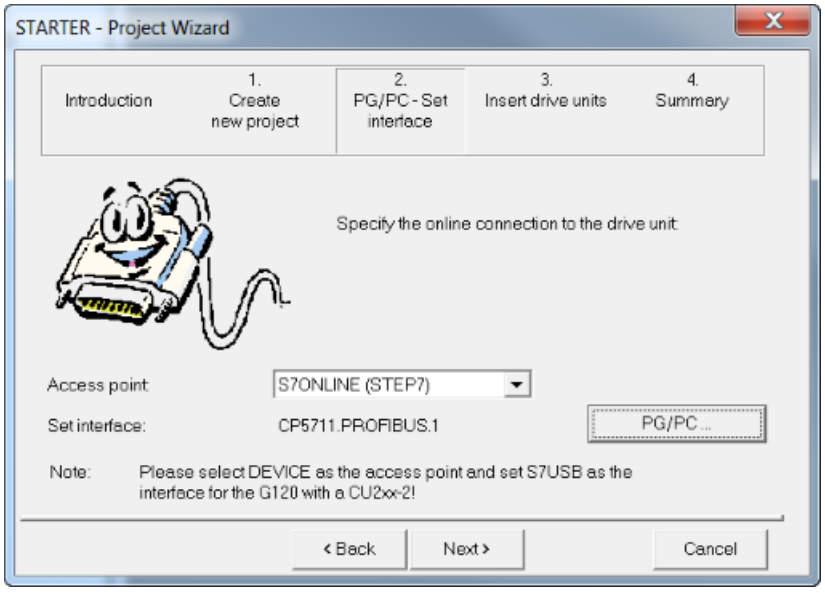

Figure 8-9 Setting up the interface

⇒ Click **PG/PC...** and set up the interface according to your device configuration.

Buttons **Properties...**, **Diagnostics...** and **Copy...** are now available.

Set S7ONLINE as access point.

Note

Connection via PROFINET IO with CBE20

To establish the connection via the additional module CBE20, see Chapter "General information about PROFINET IO (Page 464)".

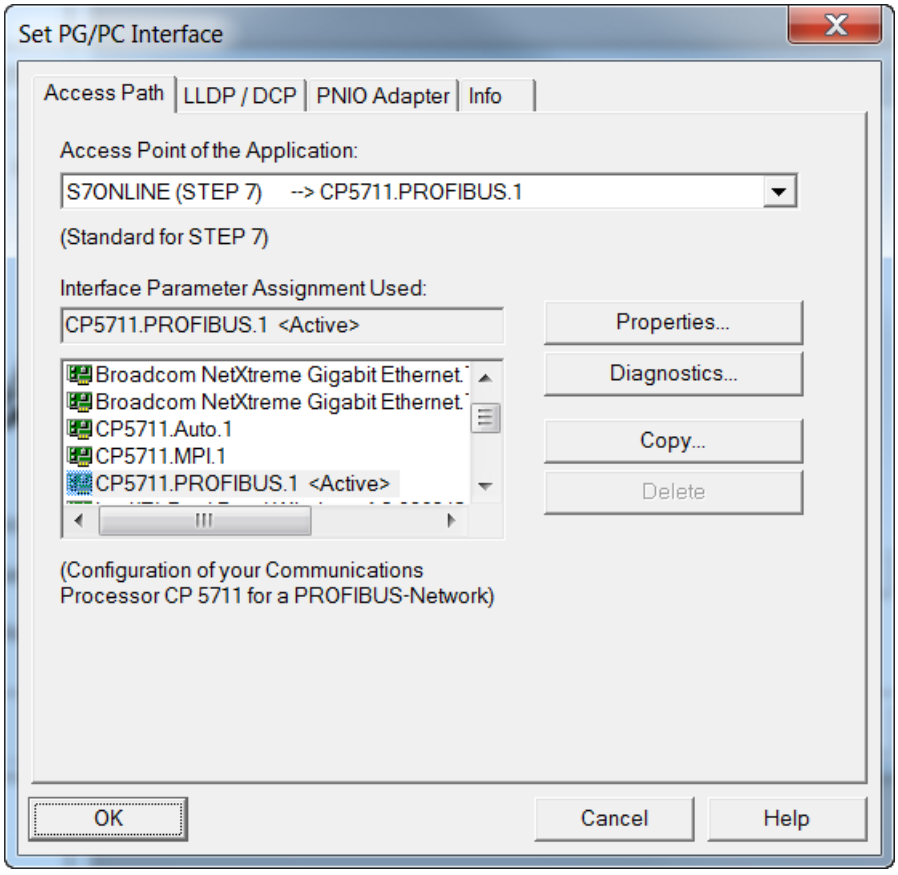

Figure 8-10 Setting up the interface

Note

To parameterize the interface, you must install the appropriate interface card; e.g.: PC Adapter (PROFIBUS).

We recommend that the Siemens USB PROFIBUS CP5711 adapter is used, order number 6GK1571-1AA00.

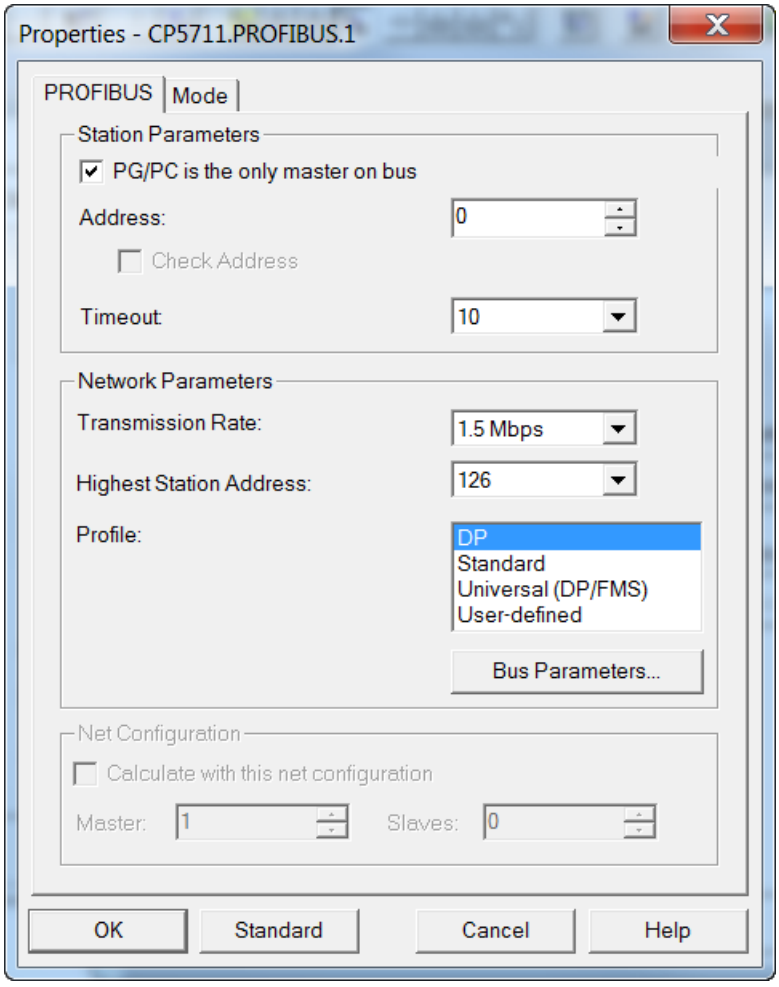

Figure 8-11 Setting the interface - properties

Note

PG/PC is the only master on bus must be activated if no other masters (PC, S7, etc.) are available on the bus.

Note

Even if no PROFIBUS interface is installed in the PC, projects can be generated and PROFIBUS addresses for the drive objects can be assigned.

Only the bus addresses available in the project will be offered. That prevents double bus address assignments.

When required, a manual address entry can also be used to enter an already assigned address.

⇒ After completion, click **OK** to confirm the setup and to return to the project wizard.

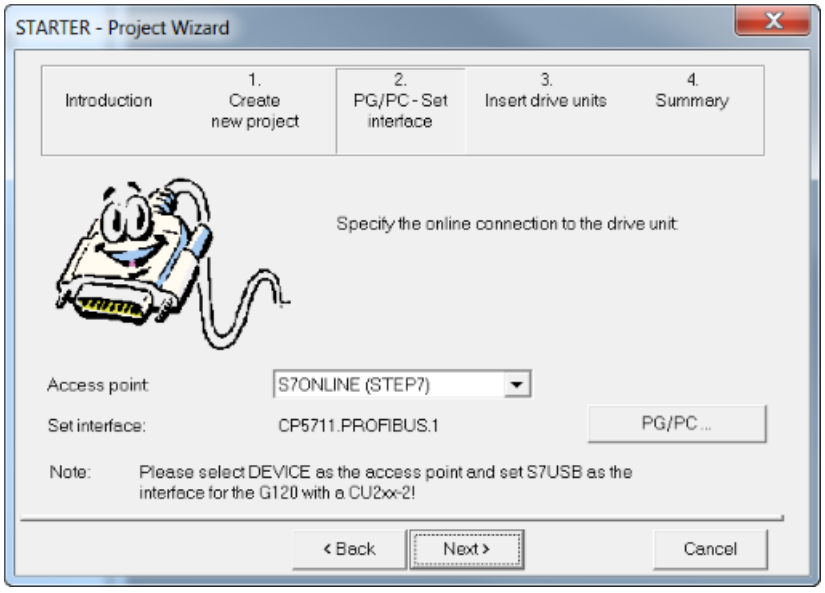

Figure 8-12 Complete setting the interface

⇒ Click **Next >** to set up a drive unit in the project wizard.

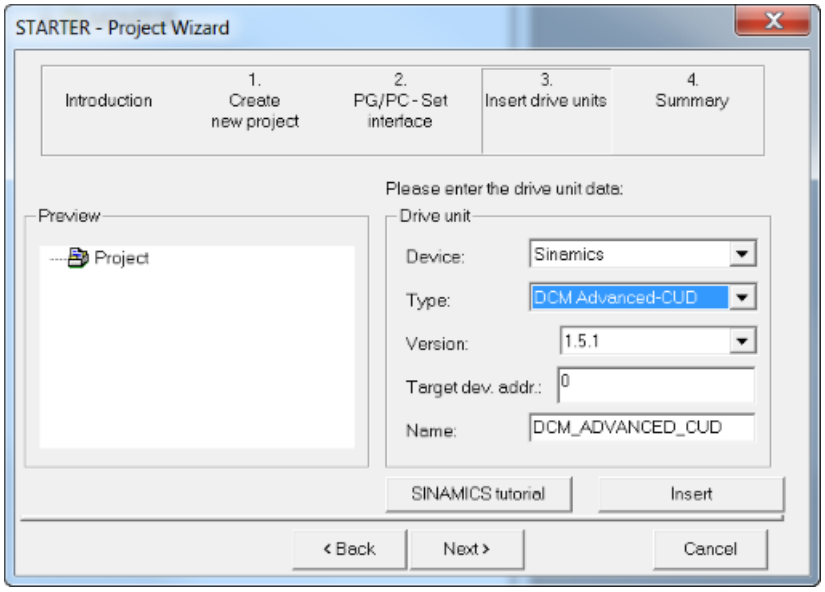

Figure 8-13 Inserting a drive unit

⇒ Select the following data from the list fields:

Unit: SINAMICS

Type: DCM Standard CUD for one standard CUD in the left-hand slot
DCM Advanced CUD for one Advanced CUD in the left-hand slot
DCM Standard CUD [2] for a Standard CUD in the right-hand slot
DCM Advanced CUD [2] for an Advanced CUD in the right-hand slot

Version: actual version

Target device address:	the corresponding bus address of the drive (126 is preset in the drive device)
Name:	Any desired name can be entered in the name box

Note

For a download, the bus address assigned here is transferred to the device, but is not transferred to parameter p0918.

To keep p0918 consistent with the project, after a "Load to target device" a "Load to PG" must still be performed – and must be repeated after every change to p0918 using BOP20 or AOP30.

Note

A second CUD for expanding the computing capacity is created in the STARTER as an independent device, type "DCM Standard (Advanced) CUD [2]".
Explanation: "[2]" is the SINAMICS nomenclature for indexed data. In this case, it is used as a name - independent of any language for a second CUD inserted in the right-hand slot.

⇒ Click **Insert**
The selected drive unit is displayed in the project wizard preview window.

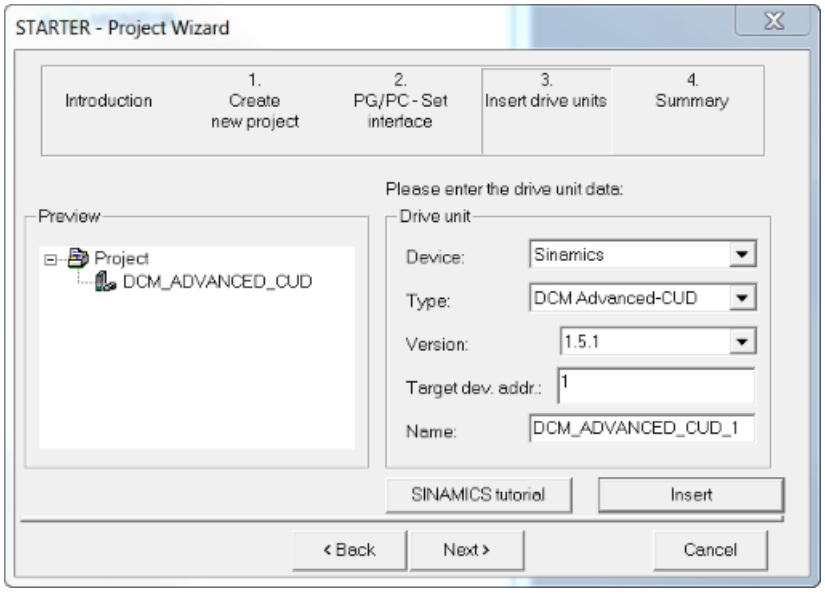

Figure 8-14 Drive unit inserted

⇒ Click **Next >**
A summary of the project is displayed.

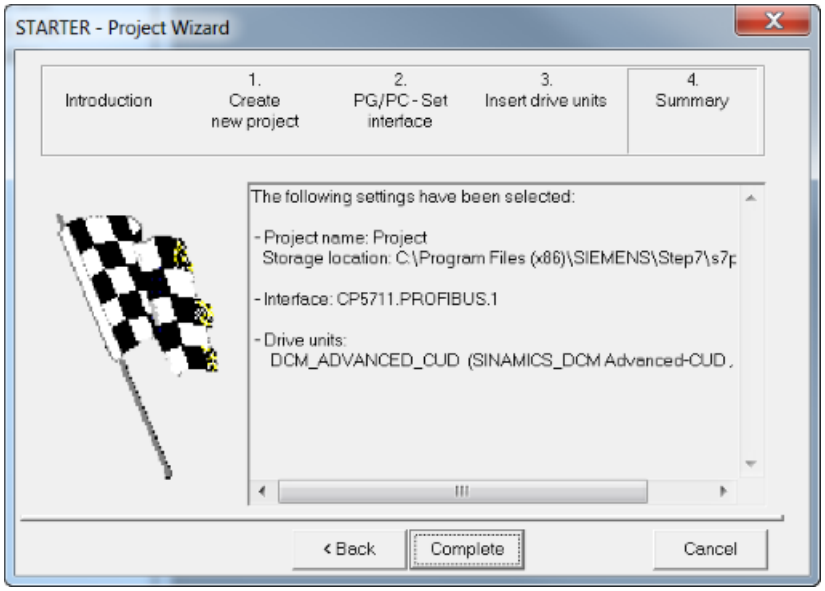

Figure 8-15 Summary

⇒ Click **Complete** to complete the creation of a new project for the drive unit.

8.5.2.2 Configuring a drive unit

Note

The STARTER must be offline for the sequence described below.

As a general rule, the drive unit can also be added to the project in online mode of the STARTER via “Browse accessible nodes”.

In the project navigator, open the tree element that contains your drive unit.

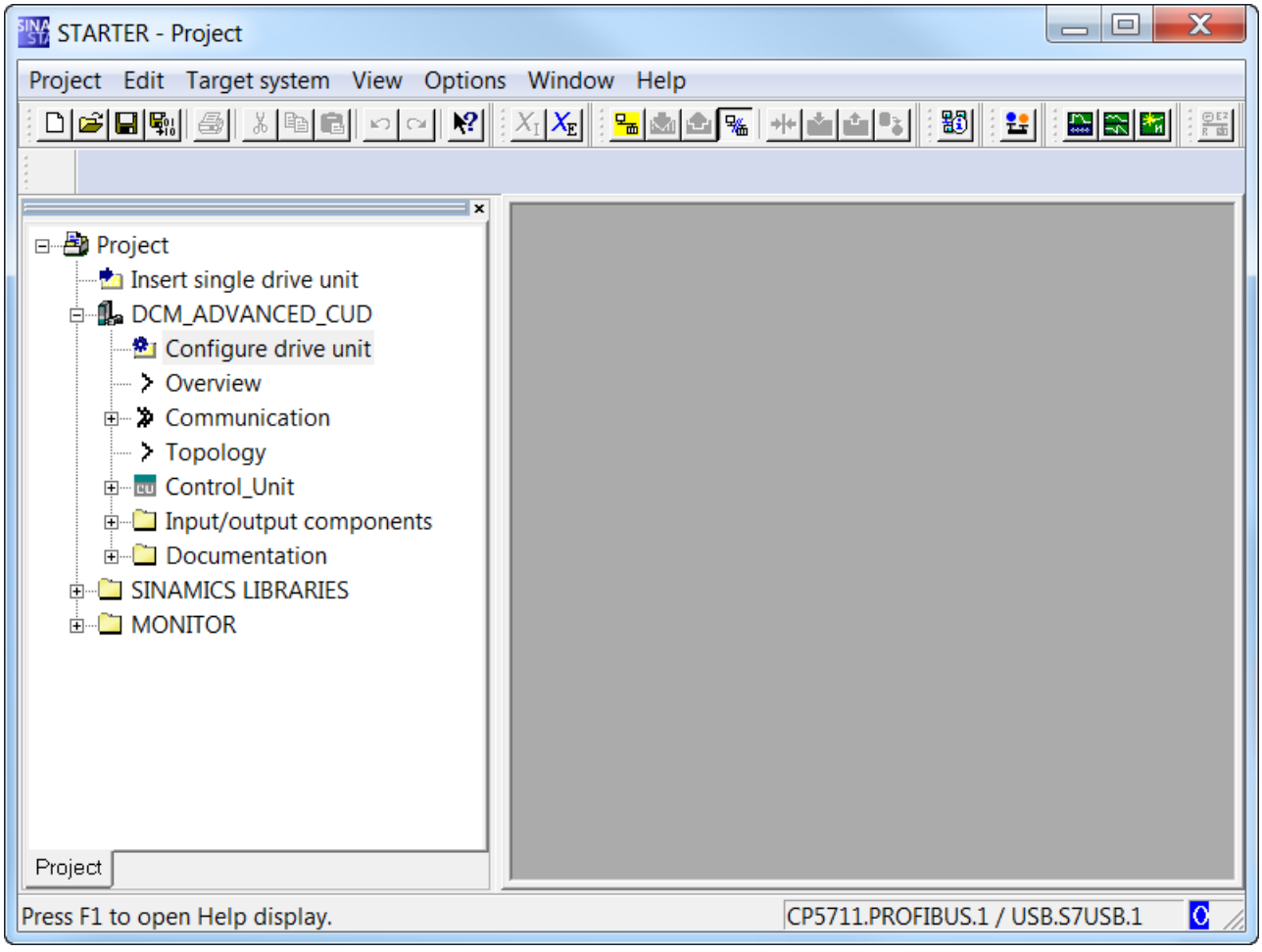

Figure 8-16 Configuring the project navigator drive unit

⇒ In the project navigator, click the plus sign next to the drive unit that you want to configure. The plus sign changes into a minus sign and the options for configuring the drive unit appear as a directory tree under the drive unit.

⇒ Double click **Configure drive unit**

Activating the option module

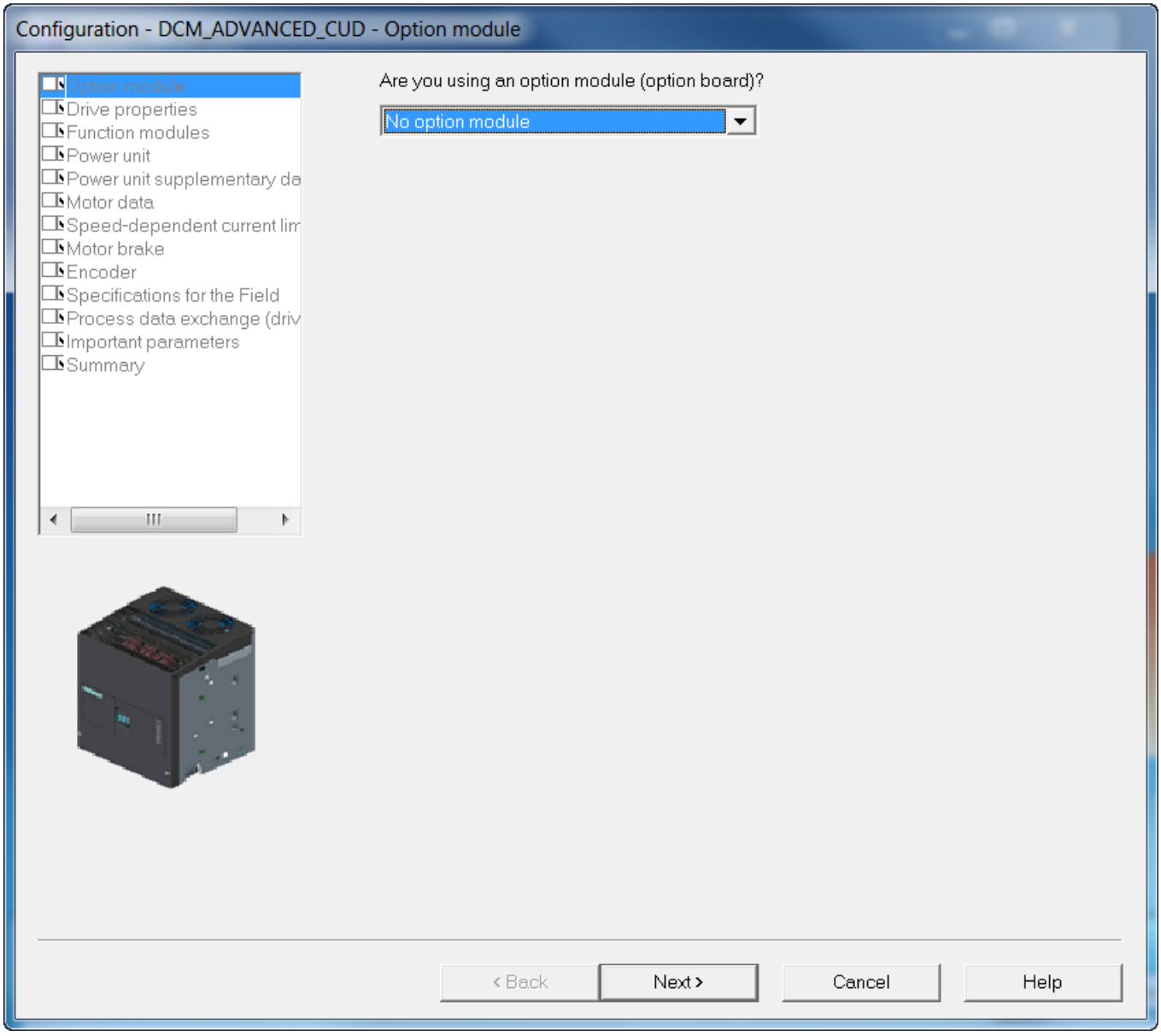

Figure 8-17 Activating the option modules

⇒ If you have inserted a PROFINET CBE20 module (option G20), then the module needs to be activated here (see Chapter "CBE20 Communication Board Ethernet (Page 306)").

⇒ Click **Next >**

Configuring the drive unit properties

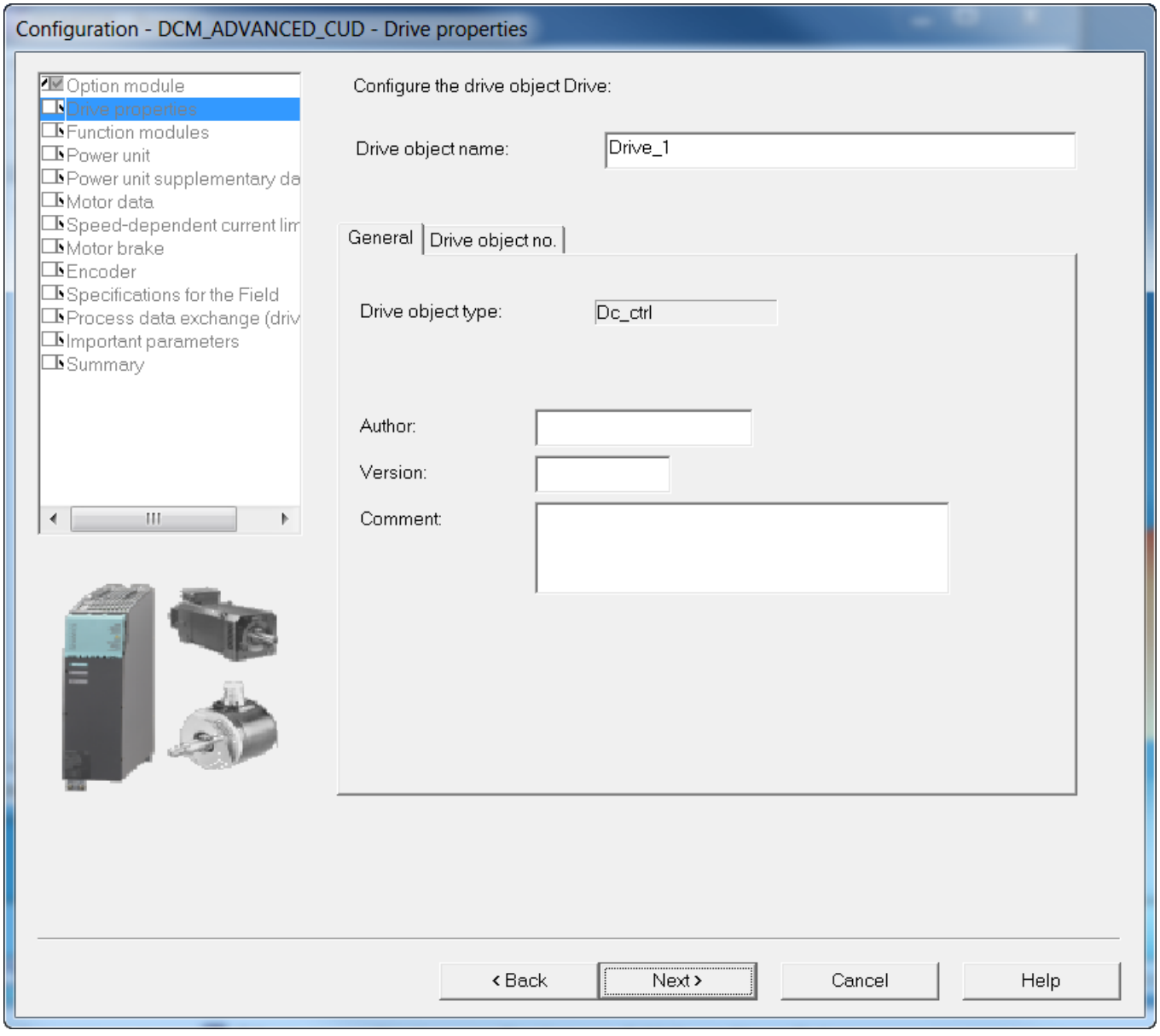

Figure 8-18 Configuring the drive unit properties

Under **Drive properties**, you can enter optional information about the drive/project.

⇒ Click **Next >**

Selecting the function modules

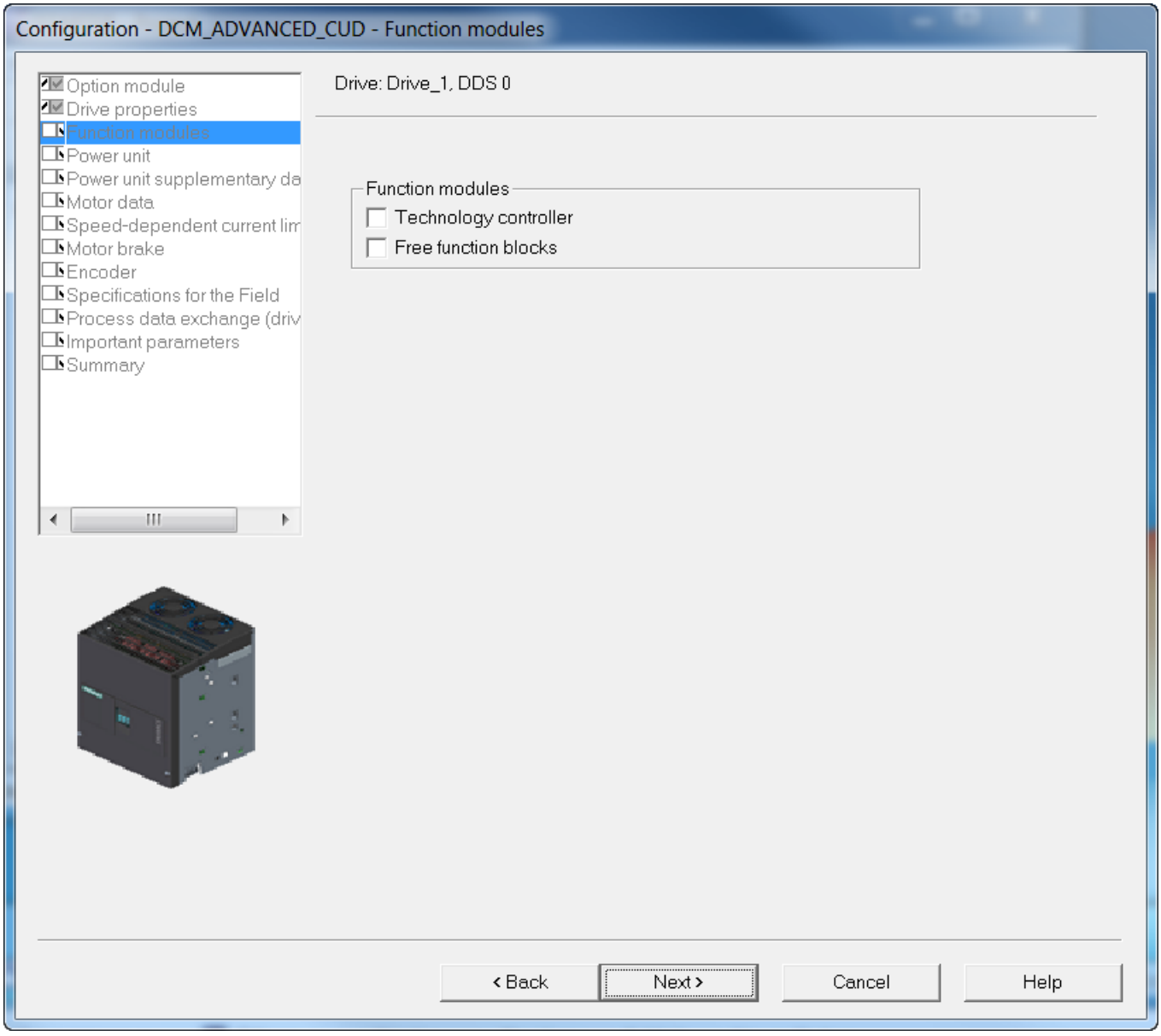

Figure 8-19 Selecting the function modules

⇒ When required, select the function module that you wish to activate.

⇒ Click **Next** >

Selecting the device

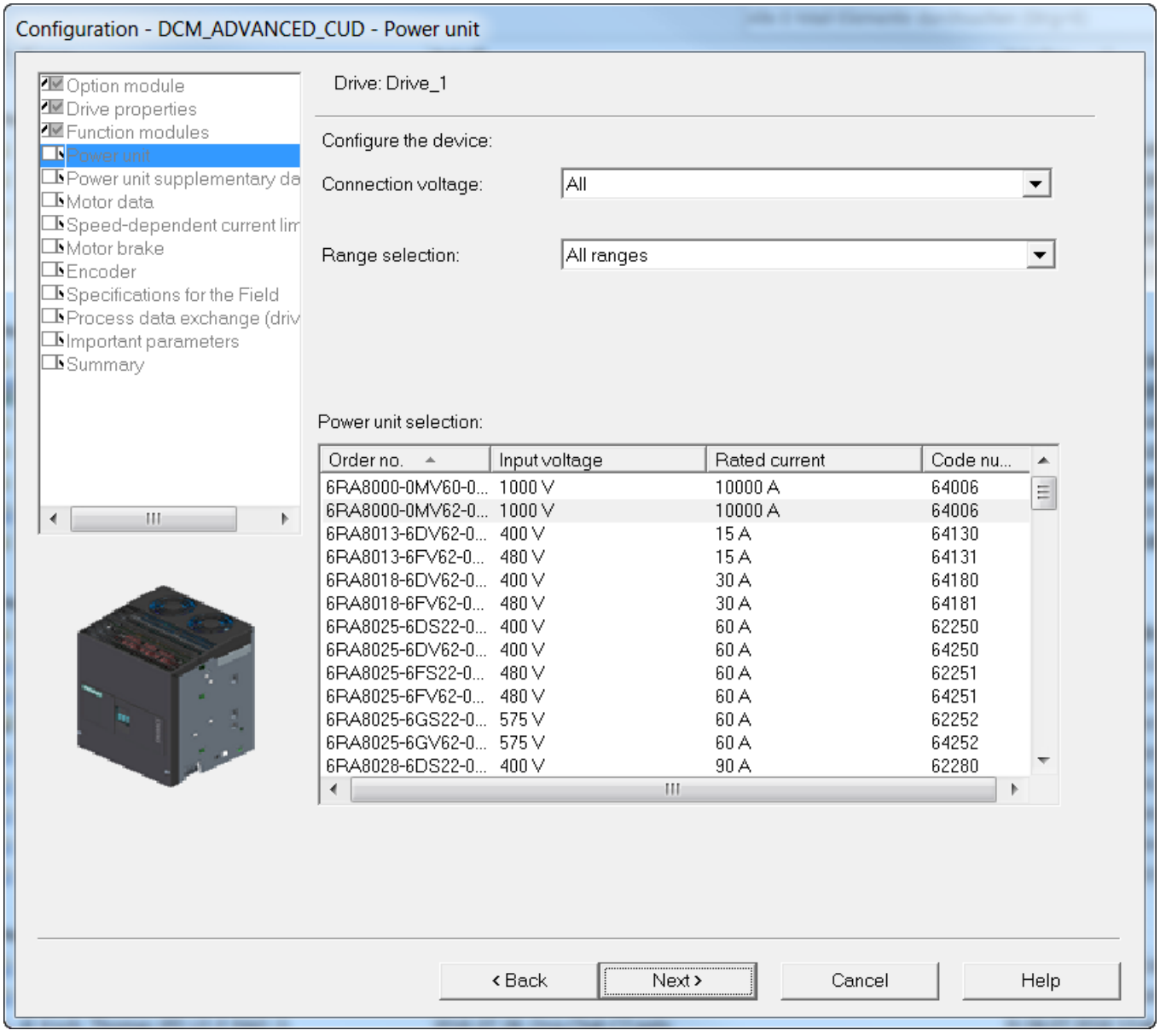

Figure 8-20 Selecting the device

With the fields **Supply voltage:** and **Range selection:** (2-quadrant operation/4-quadrant operation), you can filter the list under **Select power unit**: ...

You can find SINAMICS DCM Control Modules under 1000 V / 10000 A with article number 6RA8000-0MV62-0AA0.

⇒ Select the device.

⇒ Click **Next** >

Entering additional power unit data

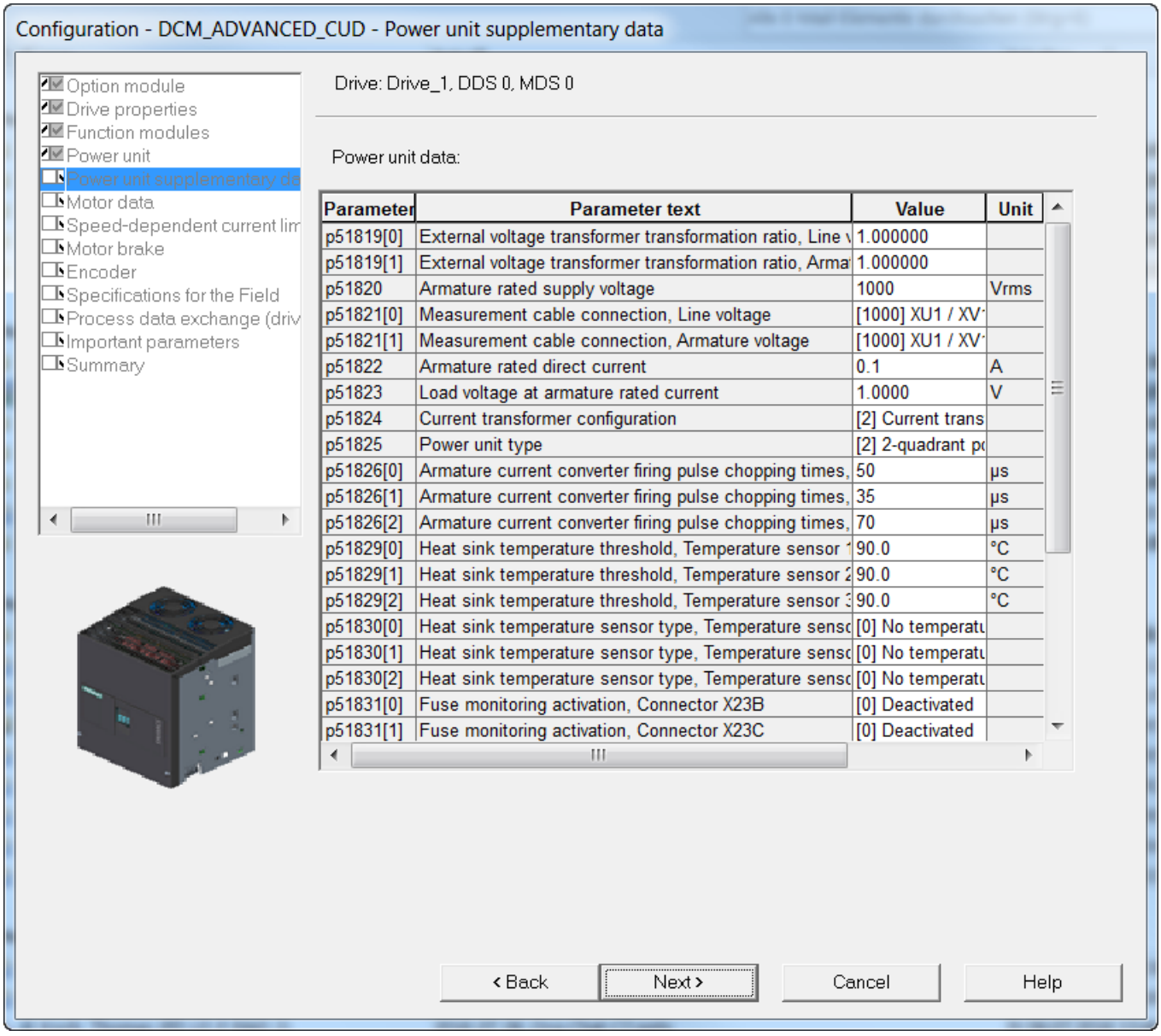

Figure 8-21 Entering additional power unit data

⇒ Enter the required power unit data here.

⇒ Click **Next** >

Adapting device data and entering motor data

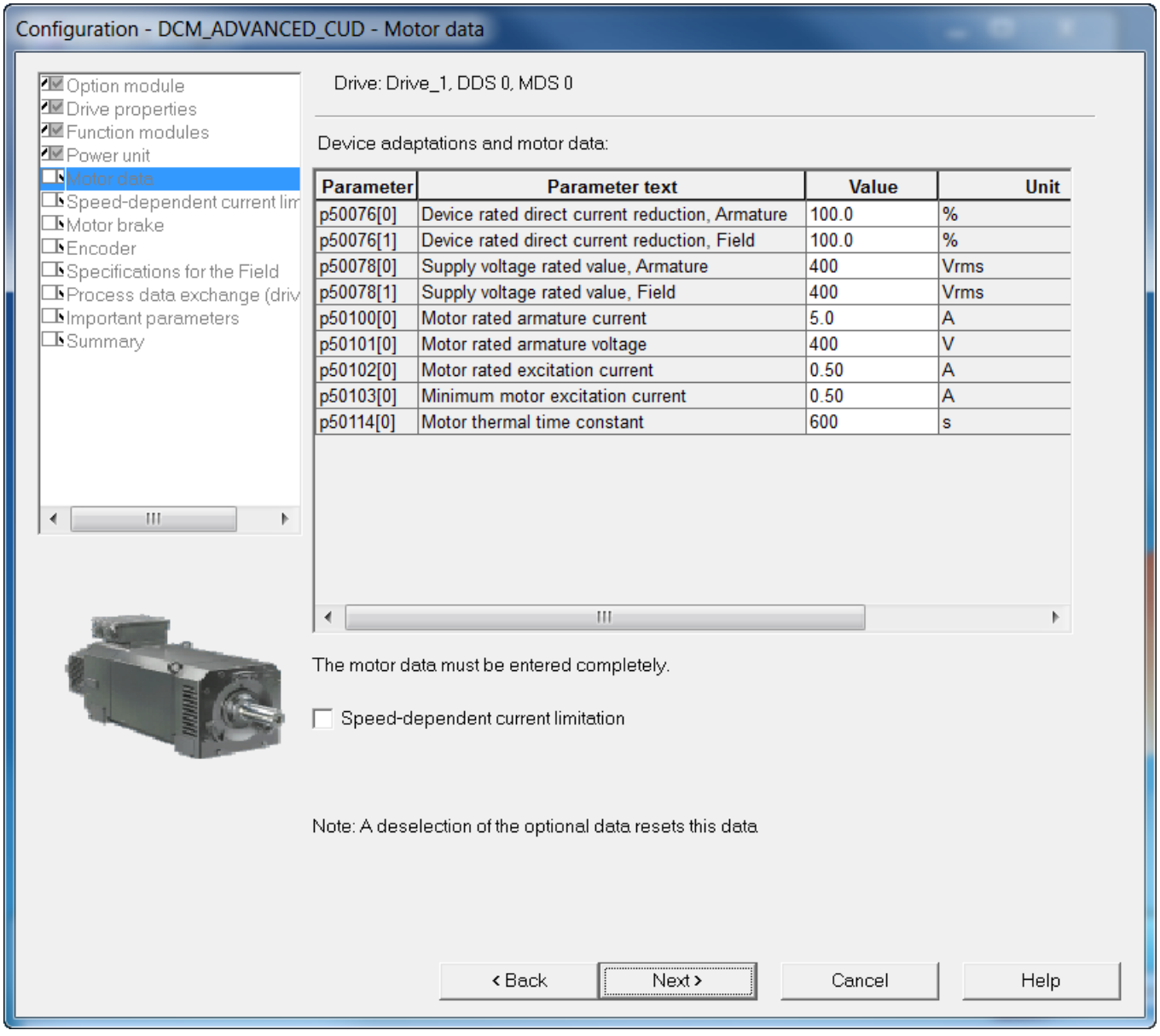

Figure 8-22 Adapting device data and entering motor data

⇒ Adapt the rated armature DC current for the unit by making a setting at p50076[0] (in %) or p50067 if:

Maximum armature current < 0.5 × rated armature DC current for the unit

⇒ Adapt the rated armature DC current field for the unit by making a setting at p50076[1] (in %) if:

Maximum field current < 0.5 × rated field DC current for the unit

⇒ Enter the actual supply voltage for the unit p50078.

⇒ Here, enter the **motor data** as a stamped on the motor rating plate.

Note

For 2Q devices, the rated DC voltage of the SINAMICS DCM specified in the technical data, can only be achieved if the α_G limit (p50150) is set to 5°. The factory setting is 30°. In order to reach the rated motor voltage (p50101[D]), the α_G limit must also be changed to 5°.

⇒ If you select **speed-dependent current limiting**, then in another setting form you can set the required values (parameters p50104 ... p50109).

⇒ Click **Next** >

NOTICE
Ensure protection against overload The data are very important for protecting against overload and must be entered correctly.

Configuring a motor brake

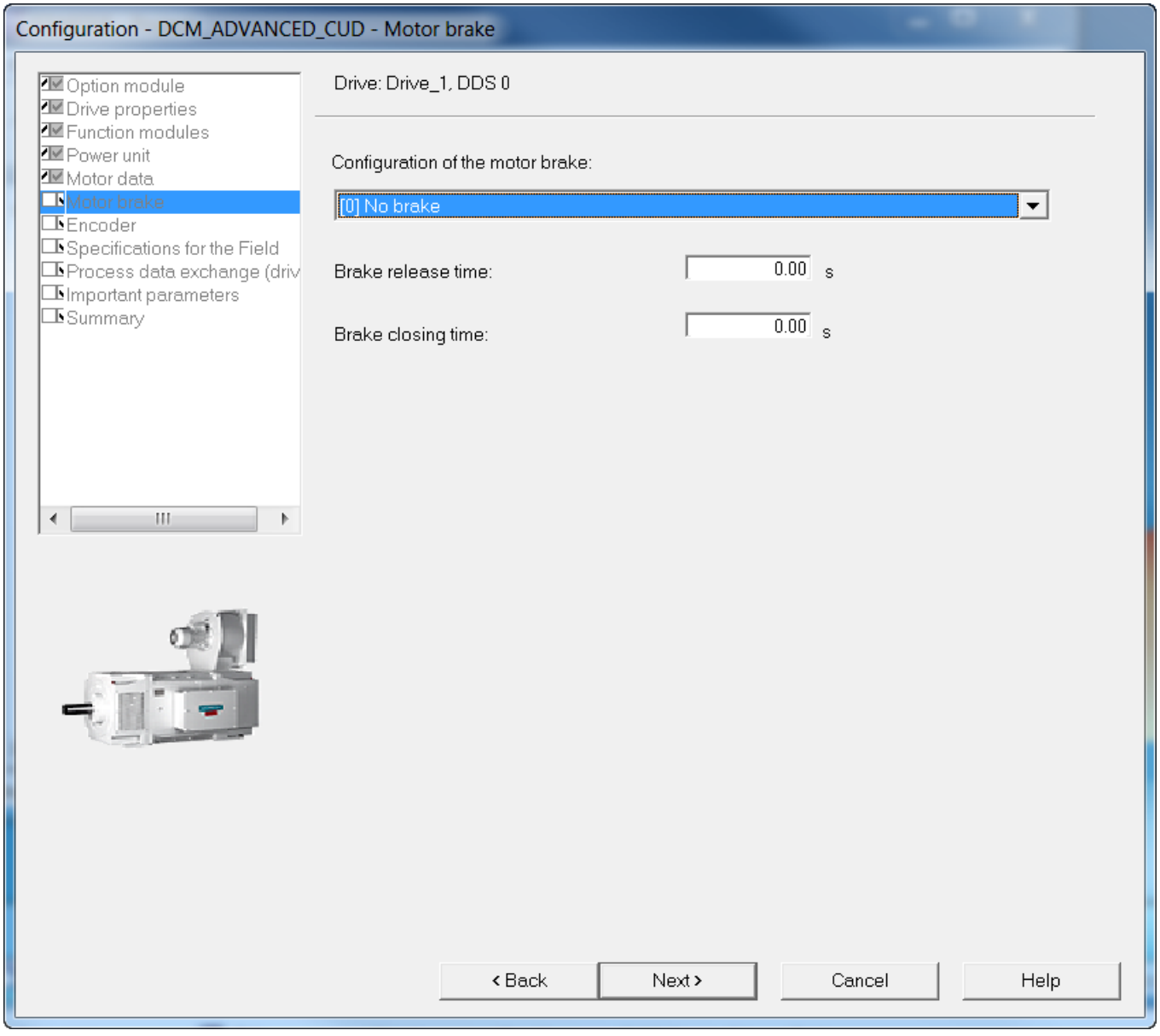

Figure 8-23 Configuring a motor brake

⇒ Under **Configuration of the motor brake:** select the appropriate setting for your device configuration:

- [0] No brake
- [1] Holding brake
- [2] Operating brake

⇒ When selecting a motor brake, additionally set the **opening time** and the **closing time**.

⇒ Click **Next** >

Defining the actual value source

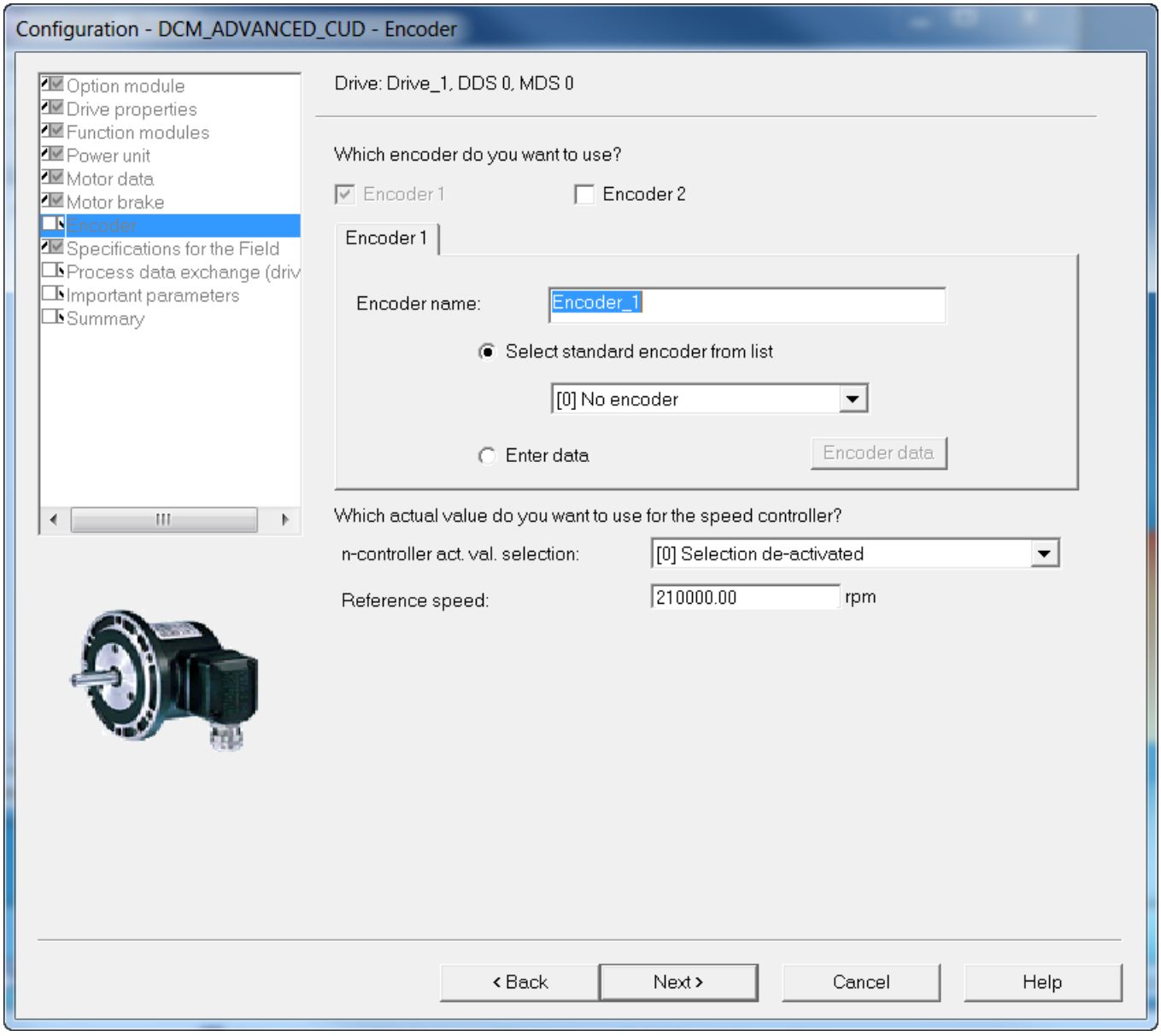

Figure 8-24 Defining the actual value source

"Encoder 1" is the encoder evaluation on the CUD.

"Encoder 2" is the evaluation of an optional encoder using SMC10 or SMC30.

⇒ Under **n-controller act. val. selection**, select the encoder type or the other actual value source:

- [0] Selection deactivated
- [1] Analog tachometer
- [2] Pulse encoder
- [3] EMF actual value internal

- [4] Free interconnection via p50609
- [5] DRIVE-CLiQ encoder

The drive cannot be operated if no selection is made.

⇒ Enter the **reference speed**. To display on the AOP30 or to transfer the speed factors via PROFIdrive, the physical speed at 100% is specified here.

The following settings are required, depending on the **n-controller act. val. selection**.

[1] Analog tachometer

The analog tachometer is connected to the CUD via terminals XT1-103, XT1-104.

⇒ Enter the **tachometer voltage at maximum speed**.

⇒ Click **Continue** >

[2] Pulse encoder

The pulse encoder is connected to the CUD via terminals X177:41 ... 48.

⇒ To select a predefined encoder configuration click on the radio button **Select standard encoder from list**, and select one of the encoders that is listed.
The following encoder types can be evaluated via the CUD:

- [3001] 1024 HTL A/B R
- [3002] 1024 TTL A/B R
- [3003] 2048 HTL A/B R
- [3005] 1024 HTL A/B
- [3006] 1024 TTL A/B
- [3007] 2048 HTL A/B
- [3008] 2048 TTL A/B
- [3009] 1024 HTL A/B unipolar
- [3011] 2048 HTL A/B unipolar

⇒ To enter special encoder configurations, click the **Enter data** radio button and then the **Encoder data** button. The following input screen is displayed for you to enter the required data.

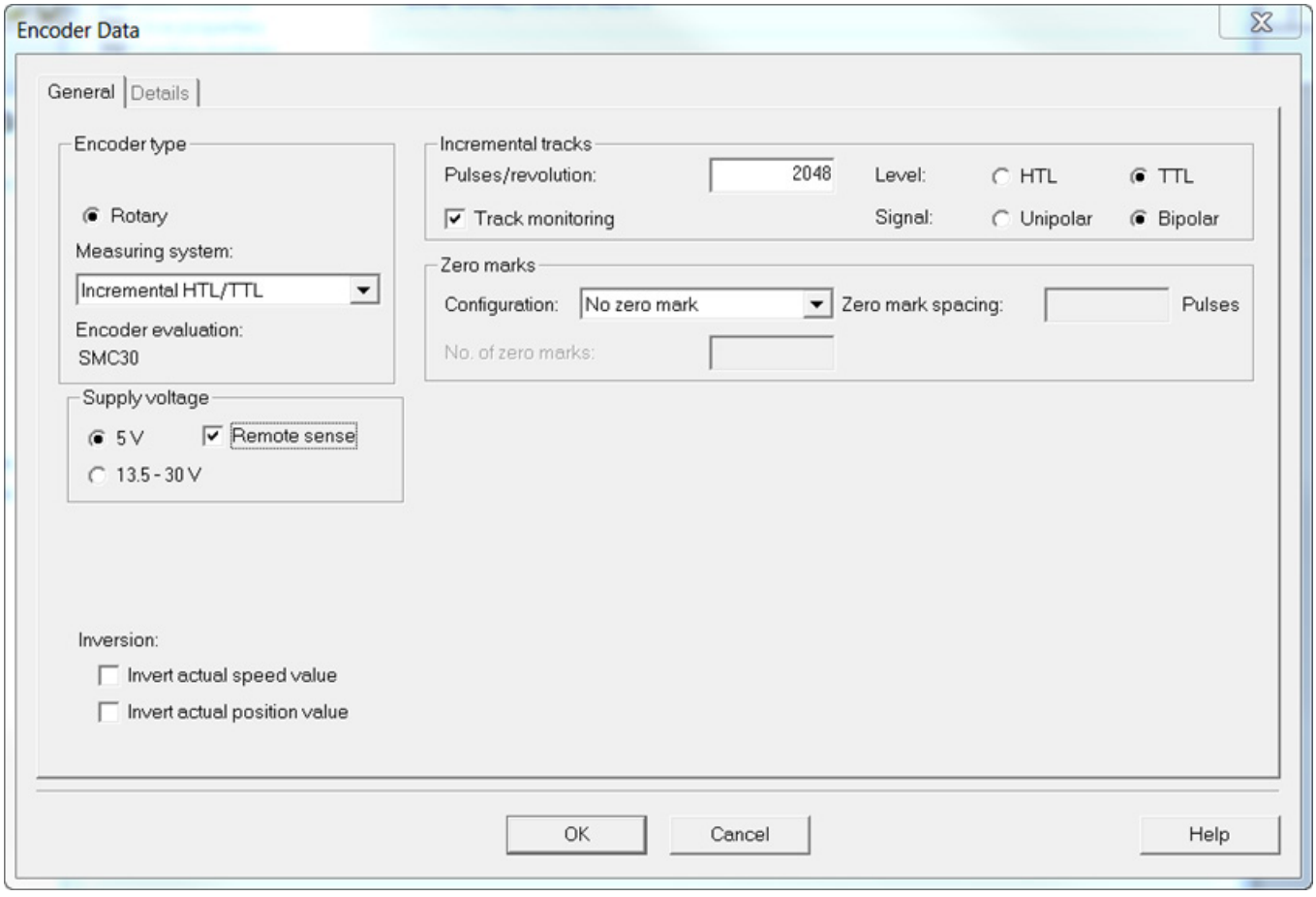

Figure 8-25 Entering encoder data - pulse encoder via CUD

⇒ Appropriately set the **measuring system** (predominantly "incremental HTL/TTL"), the **incremental tracks**, the **level** and the **zero marks**.

NOTICE
Pulse encoder power supply at terminal X177.41 of the CUD Terminal X177.41 always provides +15 V to supply the incremental encoder. This is independent of the setting selected under **voltage supply**.

⇒ Click on **OK**

⇒ Click on **Next** >

[3] EMF actual value internal

⇒ Enter the **EMF at maximum speed**.
(the EMF should be specified as the percentage of the voltage specified in the screen form).

⇒ Click on **Next** >

[4] Free interconnection via p50609

⇒ Enter the source with the actual value via the BICO interconnection.

⇒ Click on **Next** >

[5] DRIVE-CLiQ encoder: Resolver via Sensor Module Cabinet SMC10

The resolver is connected via the Sensor Module Cabinet SMC10.

⇒ Select **encoder 2** to activate the evaluation of the encoder via the Sensor Module Cabinet SMC10.

⇒ To select a predefined encoder configuration click on the radio button **Select standard encoder from list**, and select one of the encoders that is listed.
The following resolvers can be evaluated via the Sensor Module Cabinet SMC10:

- [1001] resolver 1-speed
- [1002] Resolver 2-speed
- [1003] Resolver 3-speed
- [1004] Resolver 4-speed

⇒ To enter special encoder configurations, click the **Enter data** radio button and then the **Encoder data** button. The following input screen is displayed for you to enter the required data.

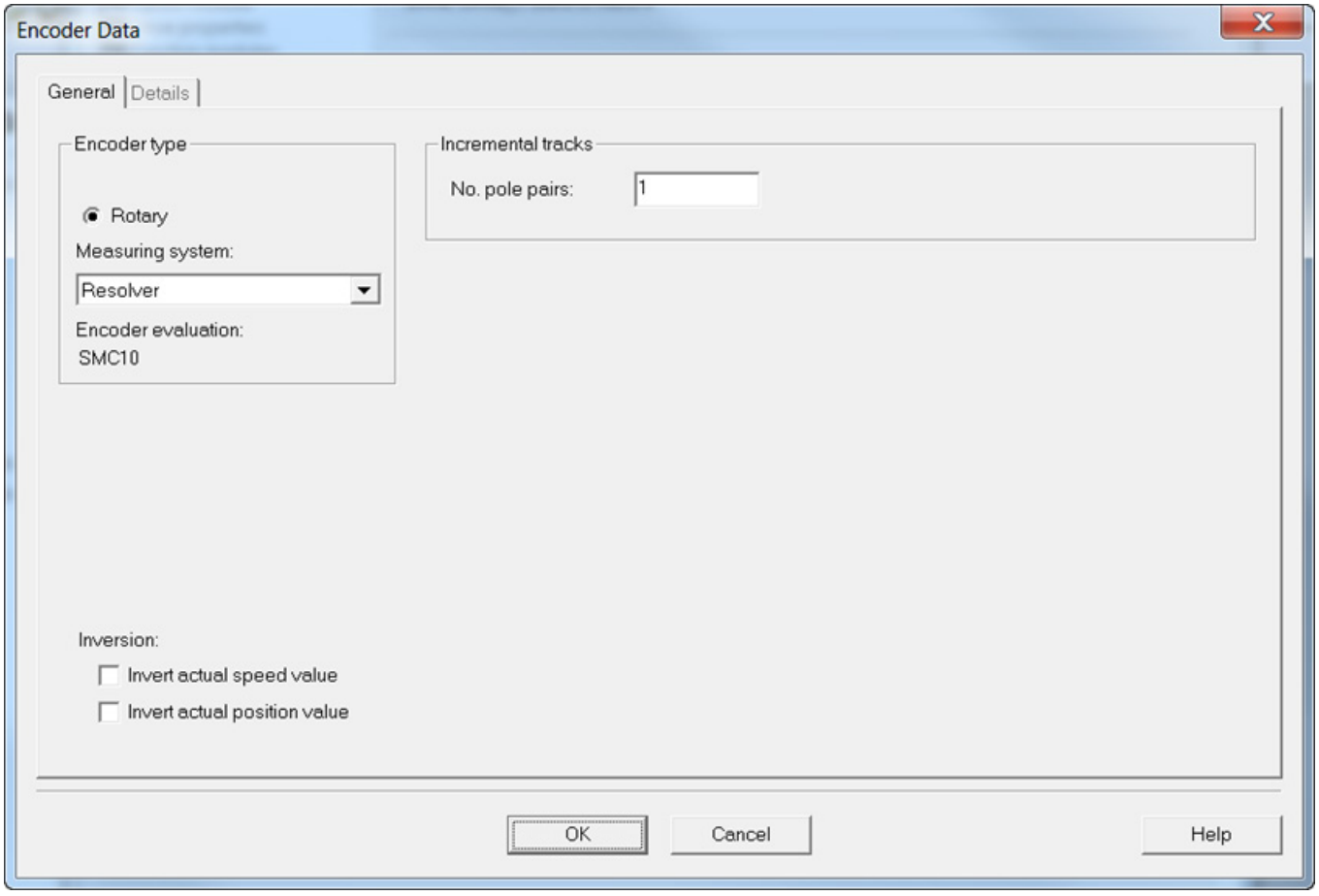

Figure 8-26 Entering encoder data - resolver via SMC10

⇒ Enter the pole pair number.

⇒ Click on **OK**

Note

Encoder configuration using the expert list

If the existing encoder type is not in the selection list, then the encoder must be manually configured using the Expert list:
p0400[1] = 9999 (user-defined)
p0404[1] = (bit field)

⇒ Click on **Next** >

[5] DRIVE-CLiQ encoder: Pulse encoder via Sensor Module Cabinet SMC30

The pulse encoder is connected via the Sensor Module Cabinet SMC30.

⇒ Select **encoder 2** to activate the evaluation of the encoder via the Sensor Module Cabinet SMC30.

⇒ To select a predefined encoder configuration click on the radio button **Select standard encoder from list**, and select one of the encoders that is listed.
The following resolvers can be evaluated via the Sensor Module Cabinet SMC30:

- [3001] 1024 HTL A/B R
- [3002] 1024 TTL A/B R
- [3003] 2048 HTL A/B R
- [3005] 1024 HTL A/B
- [3006] 1024 TTL A/B
- [3007] 2048 HTL A/B
- [3008] 2048 TTL A/B
- [3009] 1024 HTL A/B unipolar
- [3011] 2048 HTL A/B unipolar
- [3020] 2048 TTL A/B R, with sense
- [3081] SSI, singleturn, 24 V
- [3082] SSI, multiturn 4096, 24 V
- [3088] 1024, HTL, A/B, SSI, singleturn
- [3090] 4096, HTL, A/B, SSI, singleturn

⇒ To enter special encoder configurations, click the **Enter data** radio button and then the **Encoder data** button. The following input screen is displayed for you to enter the required data.

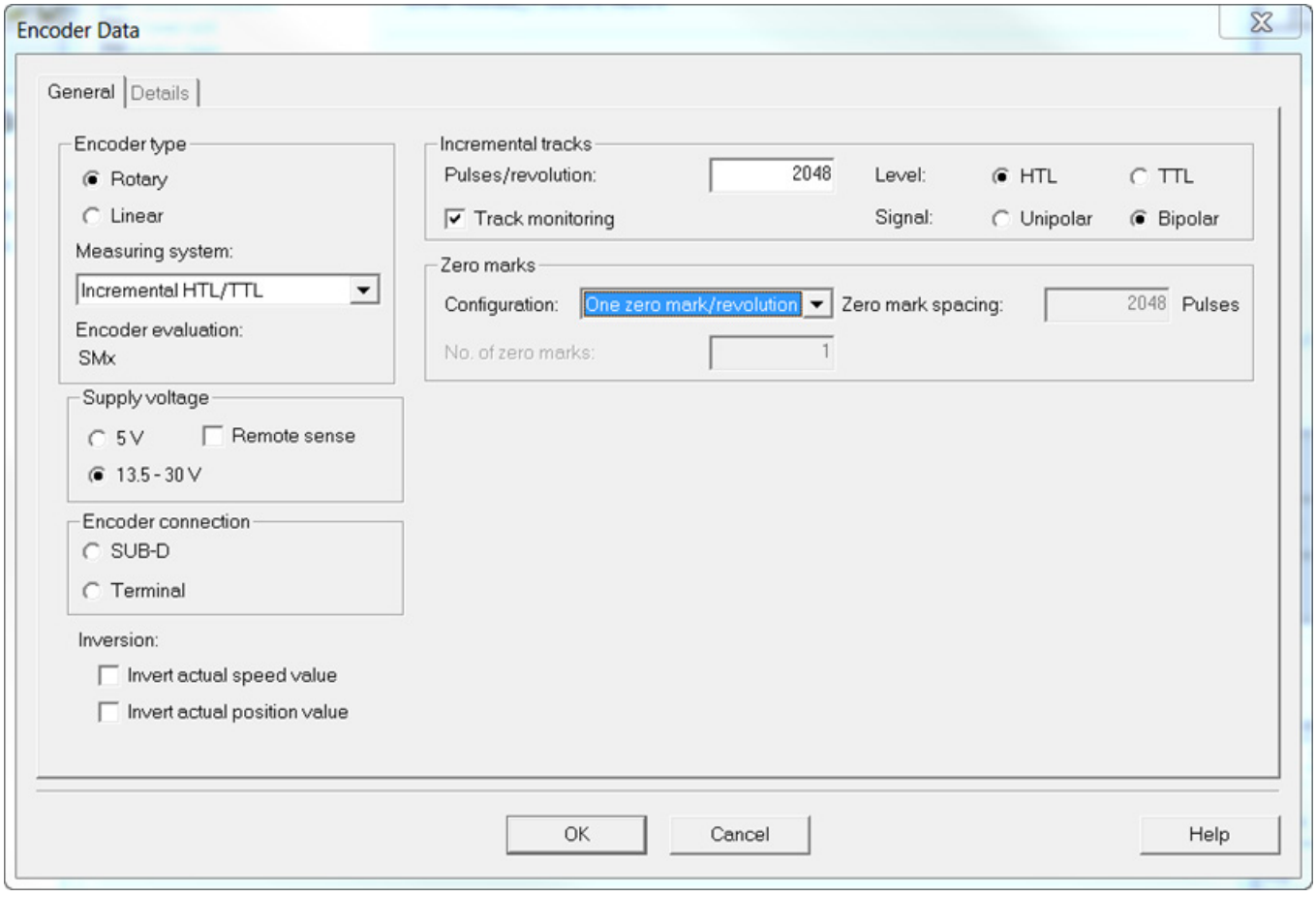

Figure 8-27 Entering encoder data - pulse encoder via SMC30

⇒ Select the **encoder connection** (SUB-D /terminal).

⇒ Enter the required encoder data.

⇒ Click on **OK**

NOTICE
Material damage when selecting the incorrect encoder supply voltage
Once the encoder has been commissioned, the supply voltage (5 V / 13.5 - 30 V) set for the encoder is activated on the SMC30 Module. If a 5 V encoder is connected and the supply voltage has not been set correctly, the encoder may be damaged. • Set the correct supply voltage for the connected encoder.

⇒ Click on **Next** >

Data on field

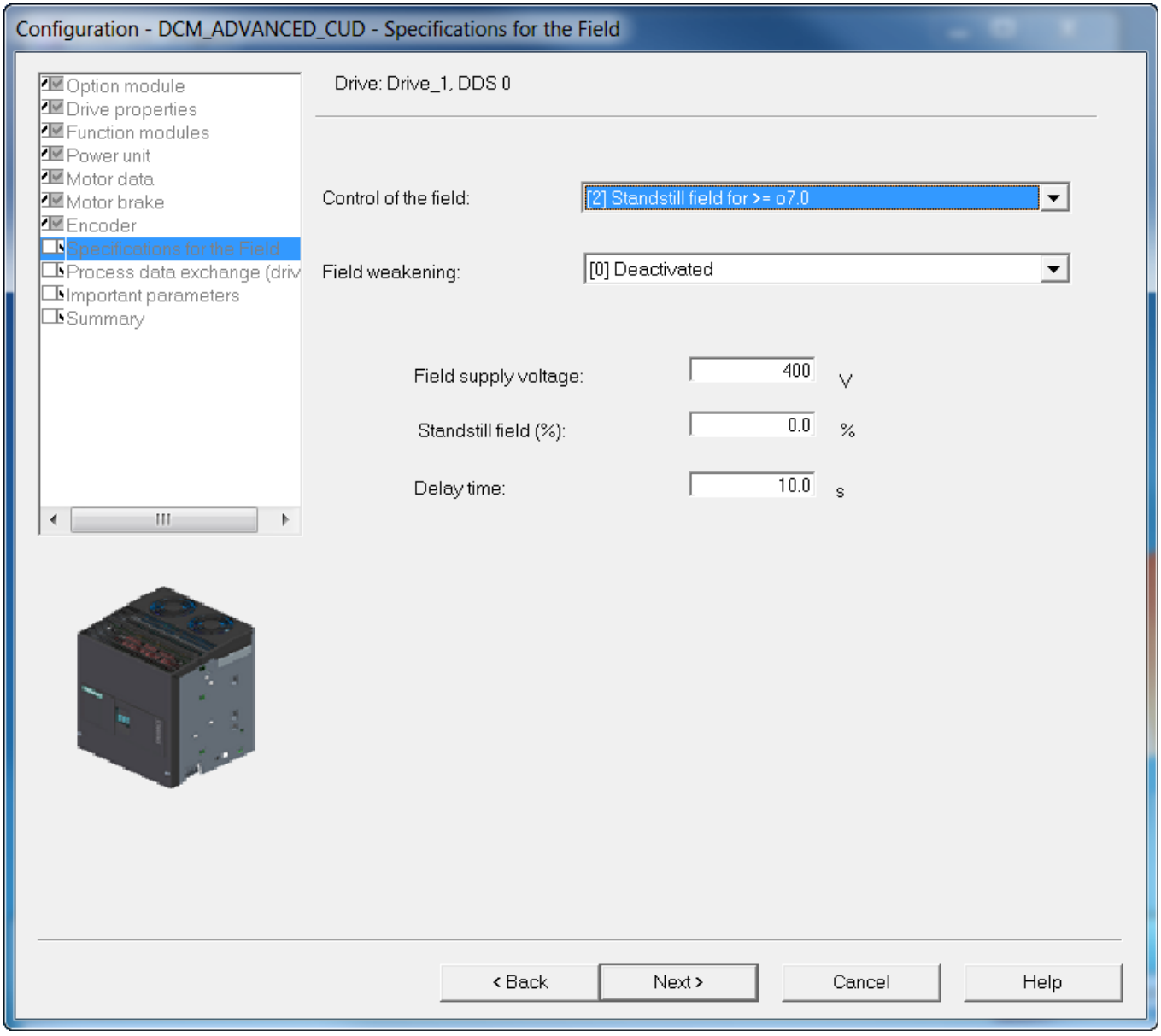

Figure 8-28 Data on field

⇒ Select the **field control:**

- [0] No field
- [1] Field also switched with the main contactor
- [2] Standstill field at >= o7.0 (factory setting)
- [3] Field is continuously switched on
- [4] Field also switched with signal auxiliaries ON
- [21] External field device, otherwise the same as position 1

- [22] External field device, otherwise the same as position 2
- [23] External field device, otherwise the same as position 3
- [24] External field device, otherwise the same as position 4

⇒ Select whether the EMF-dependent field weakening should be activated or deactivated.

Note

If **Field weakening** is activated, then a valid field characteristic must be available (p50117 = 1), otherwise, the optimization run for field weakening (p50051 = 27) must be carried out.

⇒ Depending on the selection under **Field control**, the values for **field supply voltage**, **standstill field (%)** and **delay time** can be set.

⇒ Click **Next** >

Selecting process data exchange

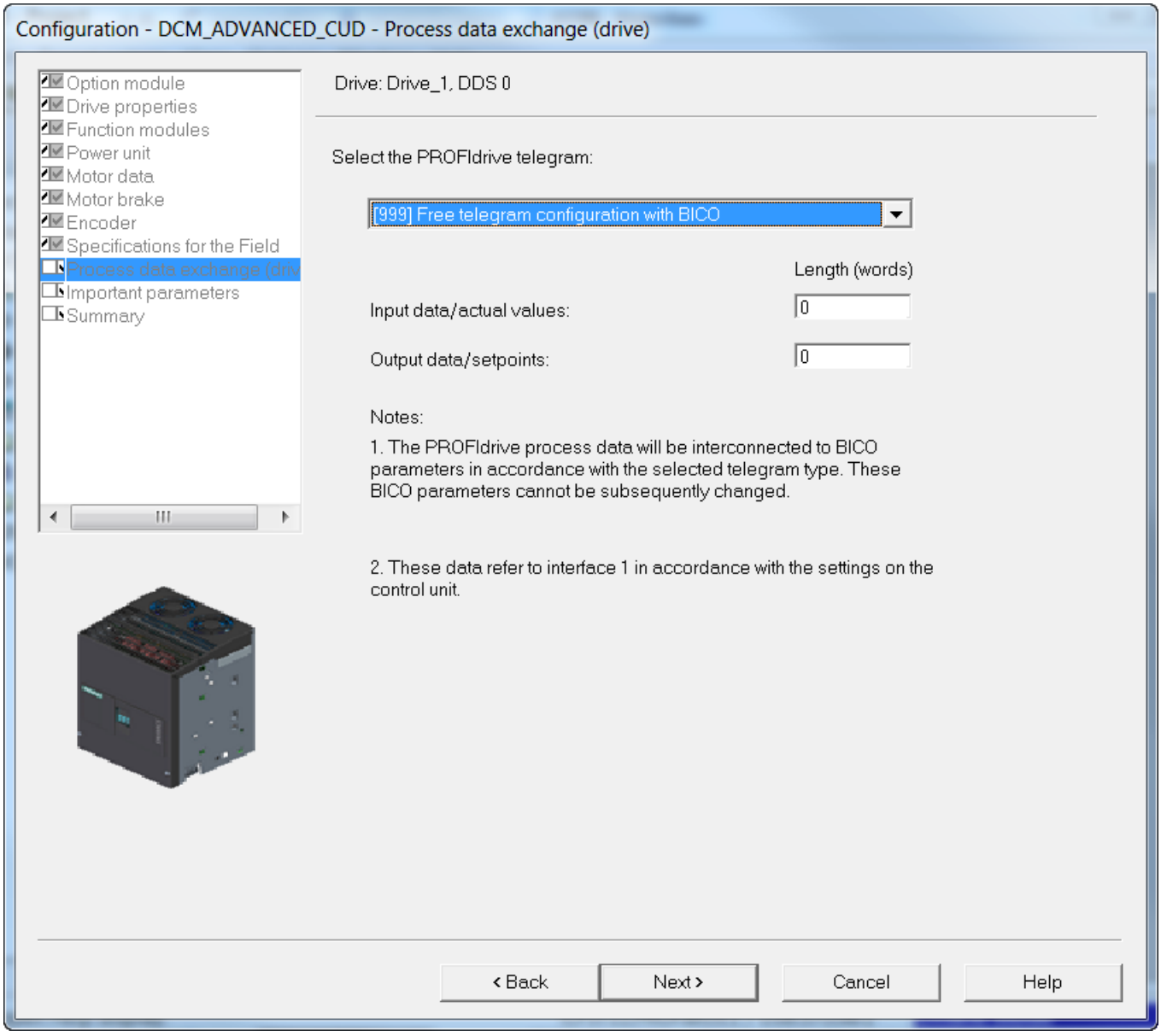

Figure 8-29 Selecting process data exchange

⇒ Select the PROFIdrive telegram type.

- 1: Standard telegram 1, PZD-2/2
- 3: Standard telegram 3, PZD-5/9
- 4: Standard telegram 4, PZD-6/14
- 20: SIEMENS telegram 20, PZD-2/6
- 220: SIEMENS telegram 220, PZD-10/10

- 352: SIEMENS telegram 352, PZD-6/6
- 999: Free telegram configuration with BICO (default setting)

Note

If a standard telegram is selected, BICO interconnections are triggered which cannot be re-parameterized. If, e.g. p0840 is to be changed again, a switchover to free telegram configuration has to be made first.

⇒ Click **Next** >

Entering important parameters

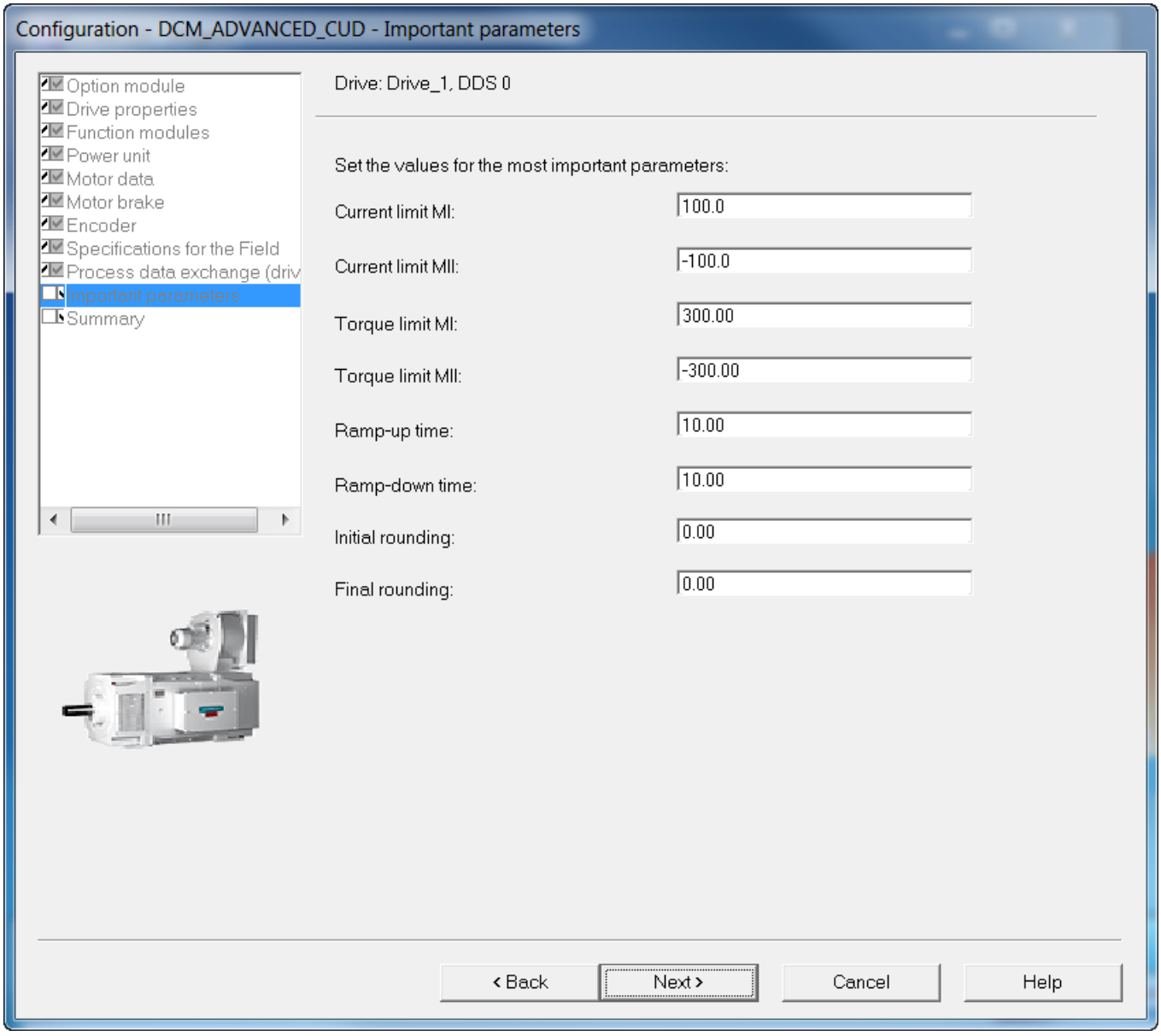

Figure 8-30 Entering important parameters

⇒ If necessary, enter important technological parameters.

Note

Tooltips

STARTER provides tooltips if you position your cursor on the required field **without clicking in the field**.

⇒ Click **Next >**

Summary

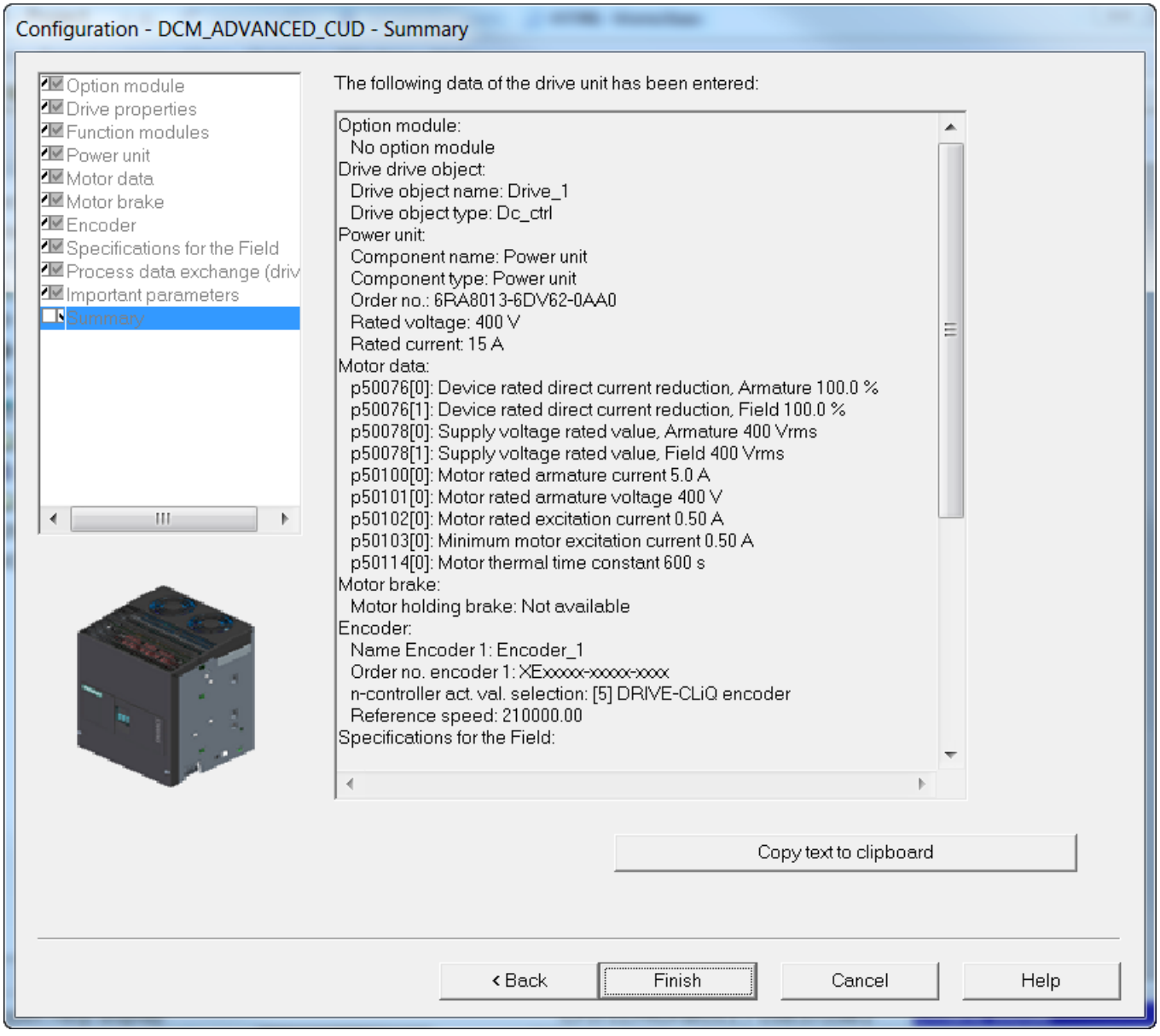

Figure 8-31 Summary

⇒ Use **Copy text to clipboard** to insert the summary of the data of your drive unit displayed in the window for later use in text processing.

⇒ Click **Finish**.

⇒ Save your project on the hard disk with **Project > Save**.

8.5.2.3 Starting the drive project

You have generated a project and saved it to your hard disk. The next step is to transfer your project configuration data to the drive unit.

Transferring a STARTER project to the drive unit

The following steps are required to transfer the STARTER project created offline to the drive unit:

- **Step 1**
  Select the menu command **Project > Connect to target system**
  Selection in the toolbar:

  

- **Step 2**
  Select DCM_ADVANCED_CUD as drive unit in the following screen and confirm with OK:

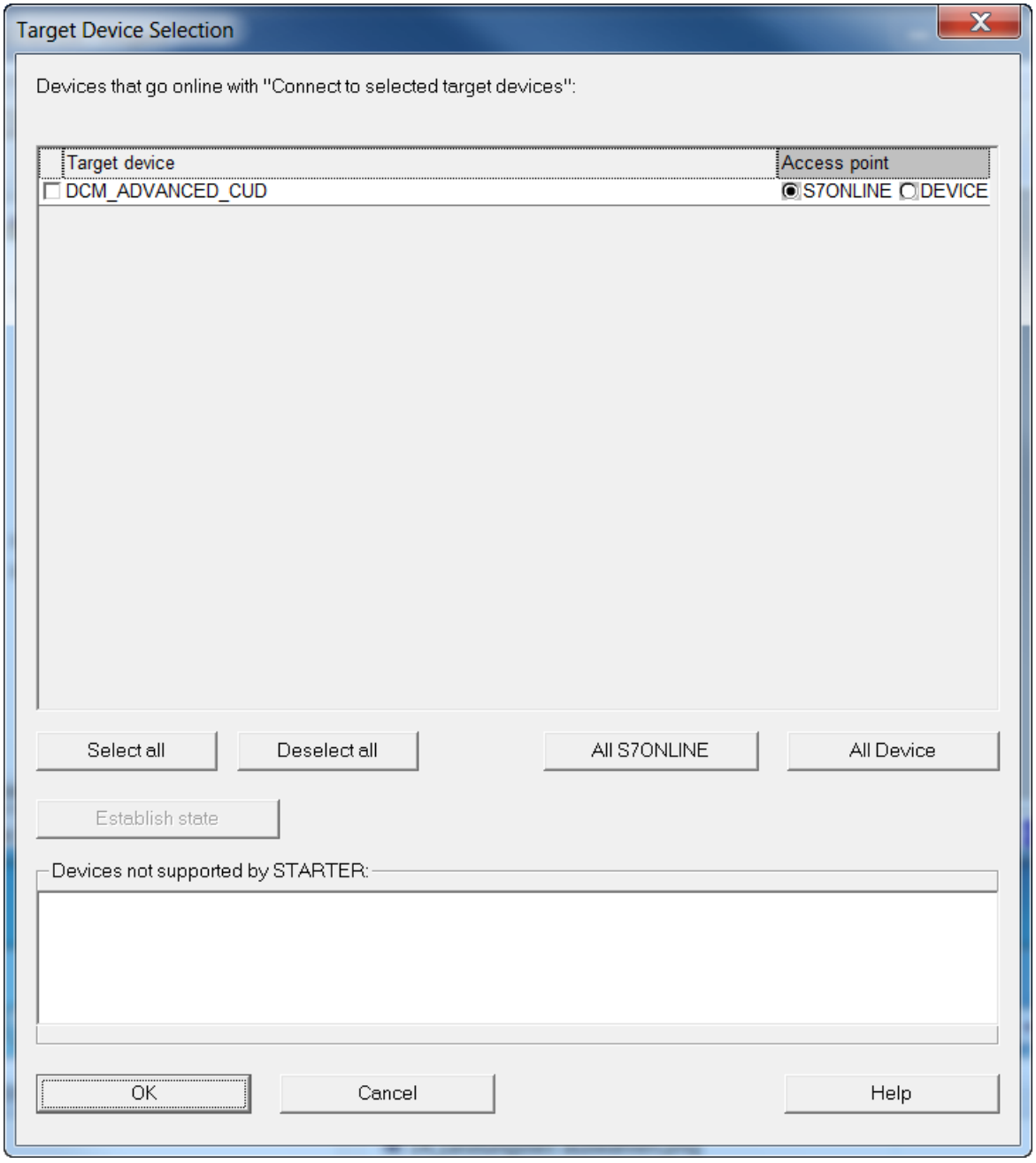

Figure 8-32 Target device selection

- **Step 3**
  Select the menu command **Download:**

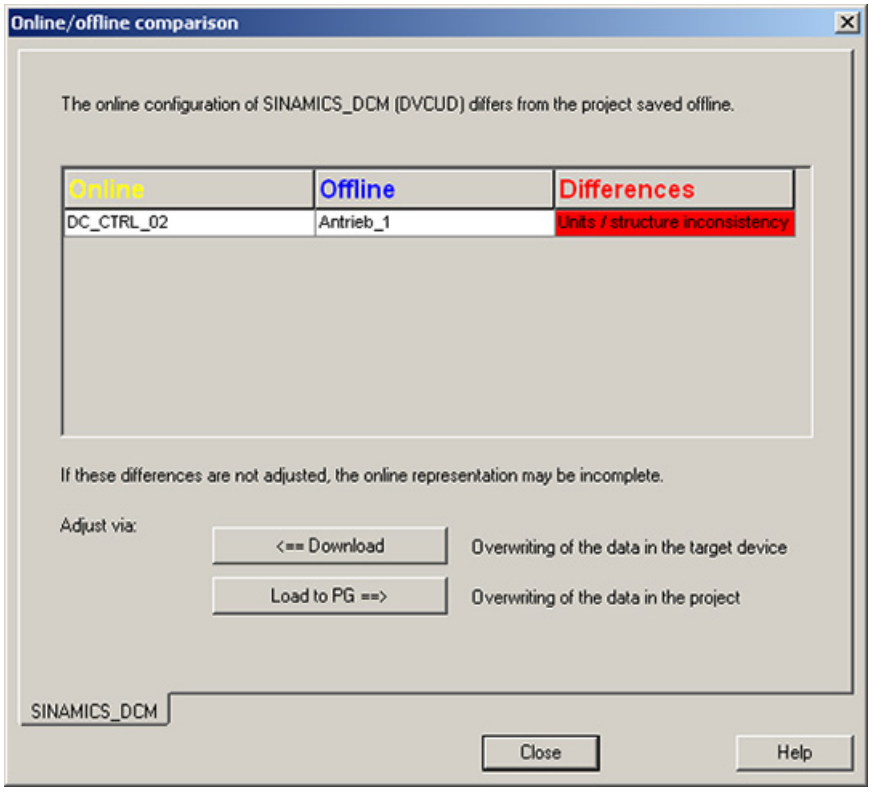

Figure 8-33 Online/offline comparison

- **Step 4**
  Activate the checkboxes if the DCC charts are also to be stored in the device and Copy RAM to ROM is to be performed after the download.

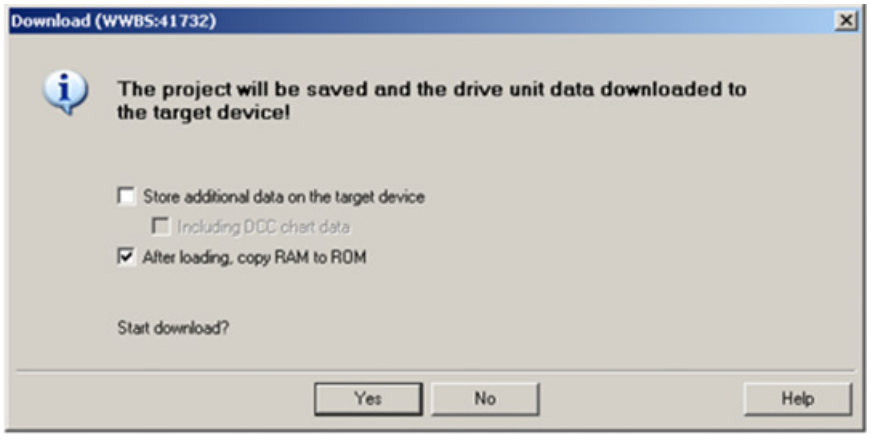

Figure 8-34 Downloading to the target device

Alternatively, the download to the target system can also be performed as follows:

- **Step 1**
  Select the menu command **Target system > Download > Project to target system**
  Selection in the toolbar



Note

Your project data has now been transferred to the drive unit. Presently, this data is only in the volatile memory (RAM) of the drive unit, however, neither saved in the non-volatile memory (ROM) nor on an optionally inserted memory card (see also Chapter "Memory card functions (Page 329)").

To save your project data in the ROM and on the optionally available memory card of your drive unit so that it is protected against power failure, carry out the following steps.

- **Step 2**
  Select the menu command **Target system > Target system > Copy RAM to ROM**
  Selection in the toolbar

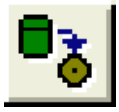

Note

The button for copying **RAM to ROM** can only be activated if the drive unit has been marked in the project navigator.

Results of the preceding steps

- You have generated a project for your drive unit using the STARTER offline
- You have saved your project data to your PC hard drive
- You have transferred your project data to the drive unit
- You have saved your project data in your drive unit's FLASH memory so that it is backed up in the event of a power failure

8.6 Activating function modules

Subfunctions can be activated in the SINAMICS family drives as function modules.

Through activation, the parameters of the corresponding functionalities are also displayed.

Function modules can be individually activated / deactivated on every drive object.

For SINAMICS DCM, the following subfunctions are modeled as function module.

- Technology controller
- Free function blocks
- PROFINET interface

8.6.1 Offline activation via STARTER

Function modules can be set for all DOs by using the properties dialog (activate by right-clicking the DO in the project navigator). Example shown for the closed-loop control DO “Drive_1”:

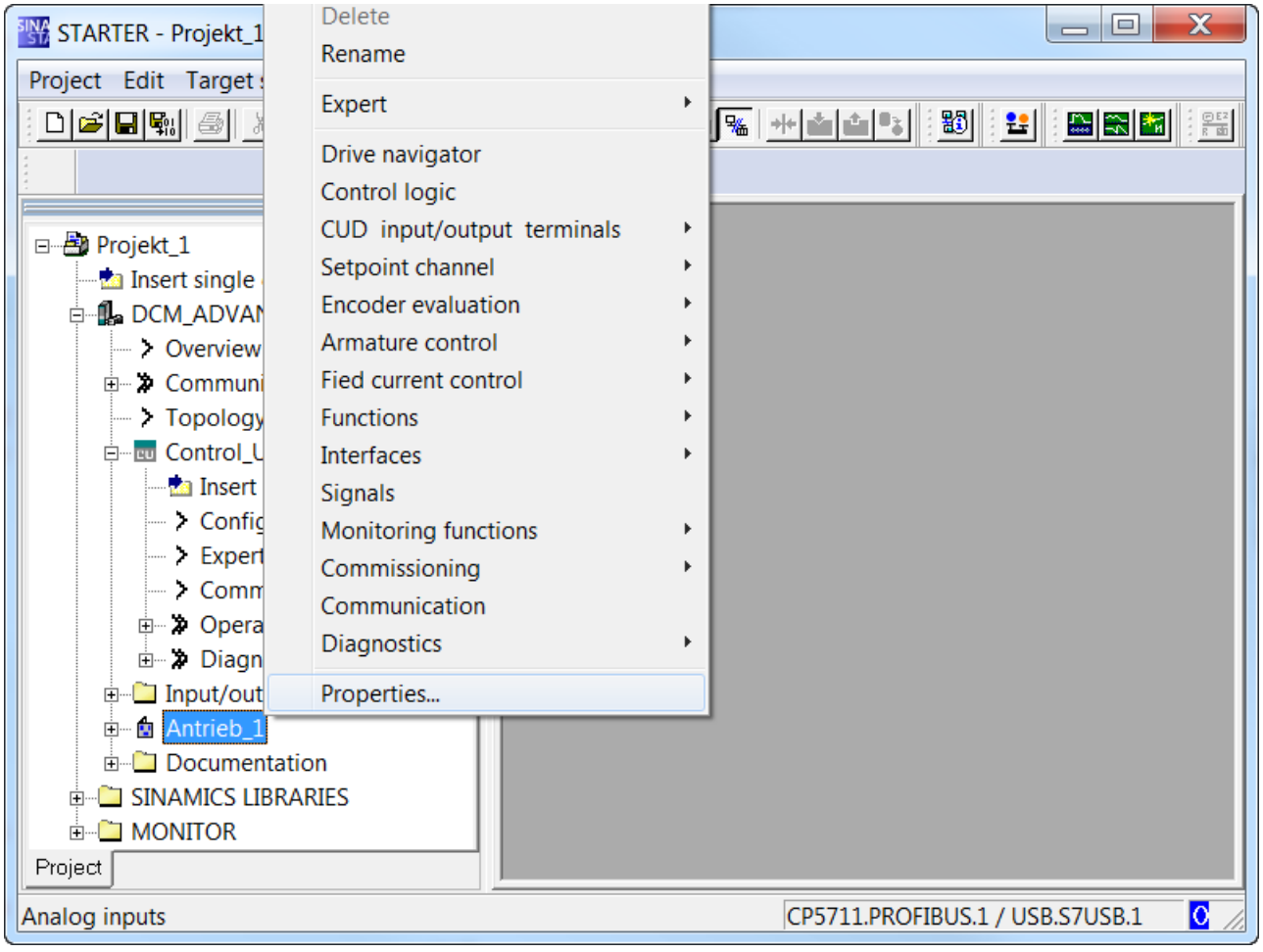

Figure 8-35 Properties

The function modules can be reached in the "Function modules" tab in the opening dialog.

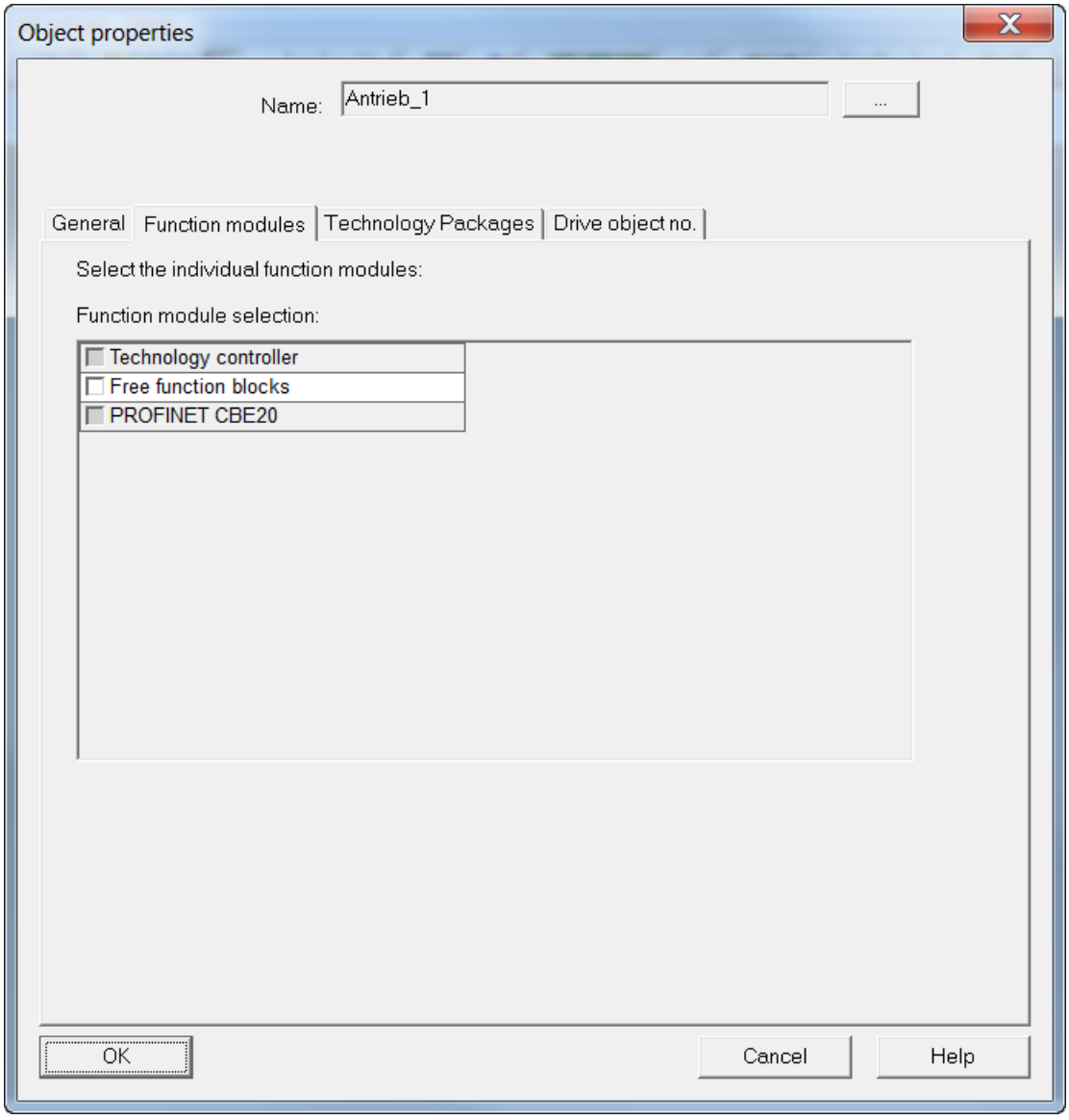

Figure 8-36 Selecting the function modules

Accept the settings by clicking **OK**.

The function modules are also correspondingly set in the drive by connecting online and downloading.

8.6.2 Online activation via parameters

Note

This process is not supported by STARTER because it uses its own mechanisms.

Activation is through p0108. r0108 and is available at each DO as a display parameter for the activated function modules.

The setting is made on p0108[i] in the Control Unit. Here the index corresponds to the DO.

- Index 0 stands for the CU
- Index 1 stands for the first DO – in the default setting, for the closed-loop control DO DC_CTRL
- Index 2 stands for the optional first TMxx, etc.

Sub-function	p0108 bit
Technology controller	16
Free function blocks	18
PROFINET interface	31

The function modules are activated/deactivated by setting the bits to "1" or "0".

On BOP20 or AOP30 parameter assignment is made at DO1 (CU_DC)

- p0009 = 2
- p0108[i] Set bits corresponding to "1" or "0"
- p0009 = 0

This triggers the firmware to reboot, therefore activating the function modules that have been set - together with the associated parameters.

Note

Changing the parameter quantity structure is copied to the optional AOP30 by "relearning" existing parameters. This takes a few minutes.

8.7 Commissioning optional additional modules

Additional modules can be integrated via DRIVE-CLiQ (TM15, TM31, TM150, SMC10, SMC30) - or via the option slot of the Control Unit CUD (CBE20).

The components must be logged in to the firmware during a first commissioning.

That can be done:

- Offline by inserting the components into the project in STARTER and loading the project into the drive
- By adding the components through the parameter assignments on BOP20 / AOP30

8.7.1 Terminal Modules (TM31, TM15, TM150)

8.7.1.1 Commissioning with STARTER

Requirement

The project must be consistent with the drive before adding the TMxx. Carry out "Load to the PG" and then go offline.

An input/output component can only be inserted in the offline state.

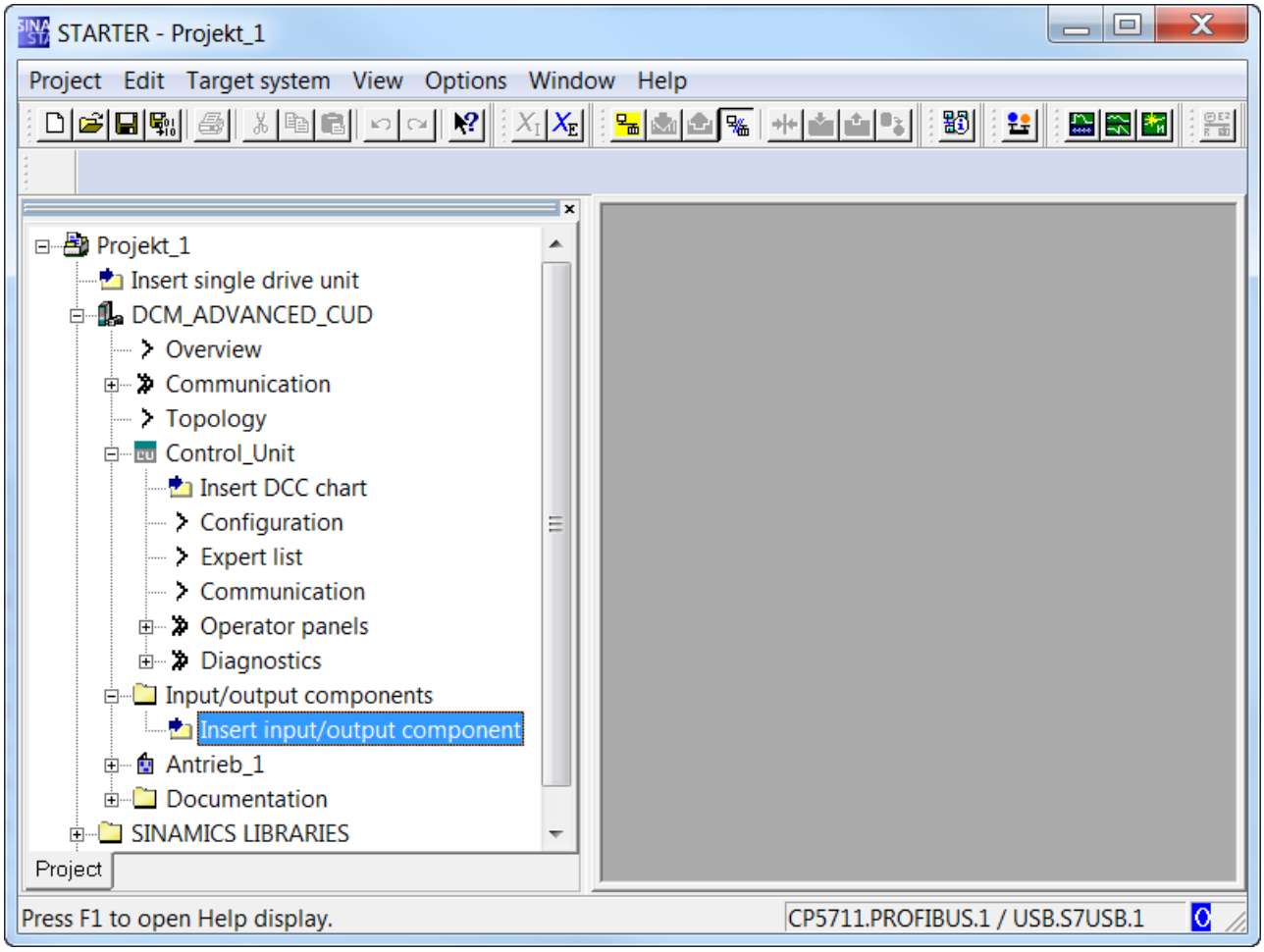

Figure 8-37 Inserting input/output components

- Double-click "Insert input/output component".

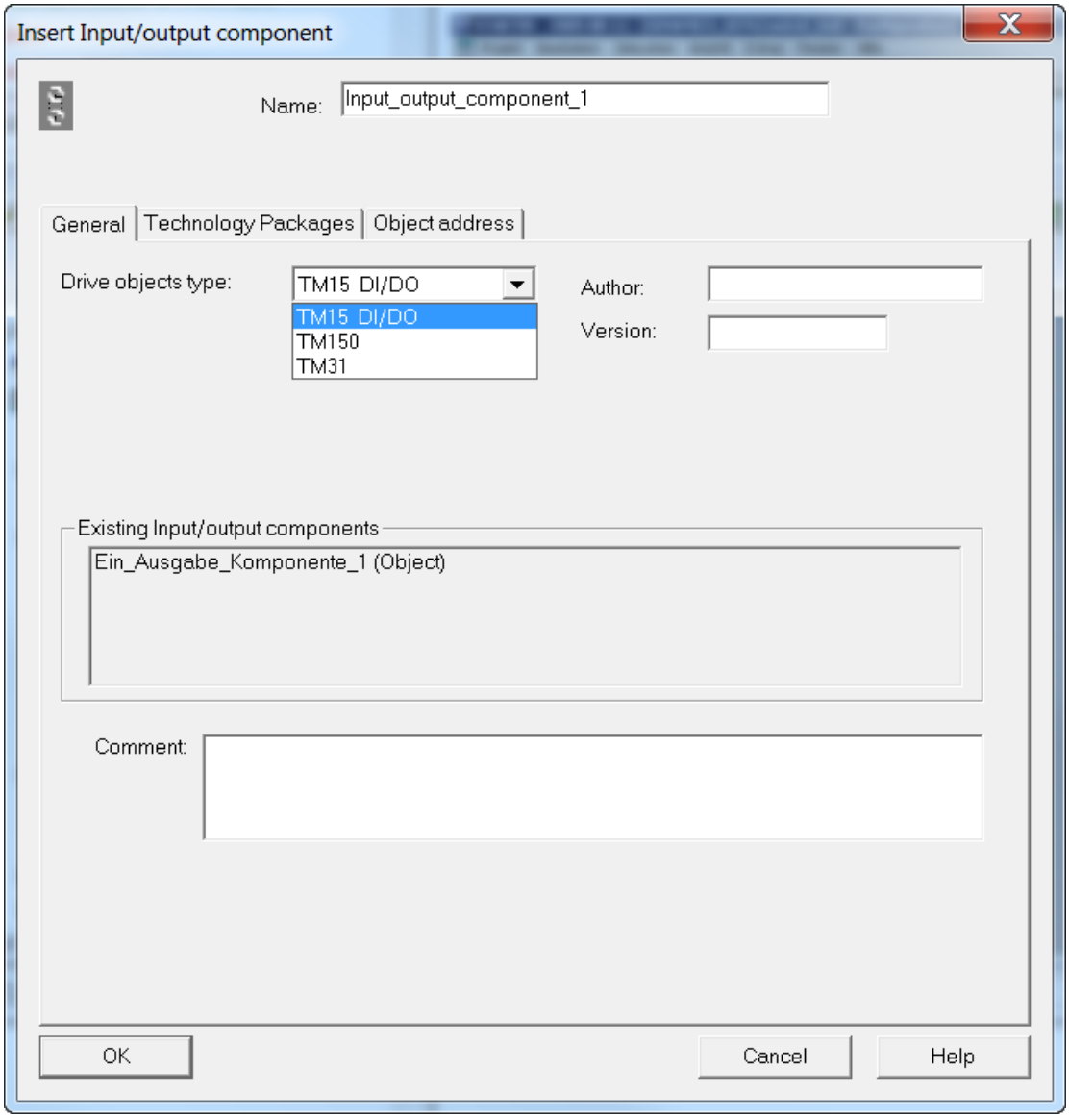

Figure 8-38 Selecting input/output components

- Select the desired type.
- Overwrite the text in the "Name:" field with the name selected for the I/O component (e.g. TM31_1).

- In the topology view, check at which interface of the Control Unit input/output components should be connected, and connect them there.
  [0] = X100, [1] = X101.

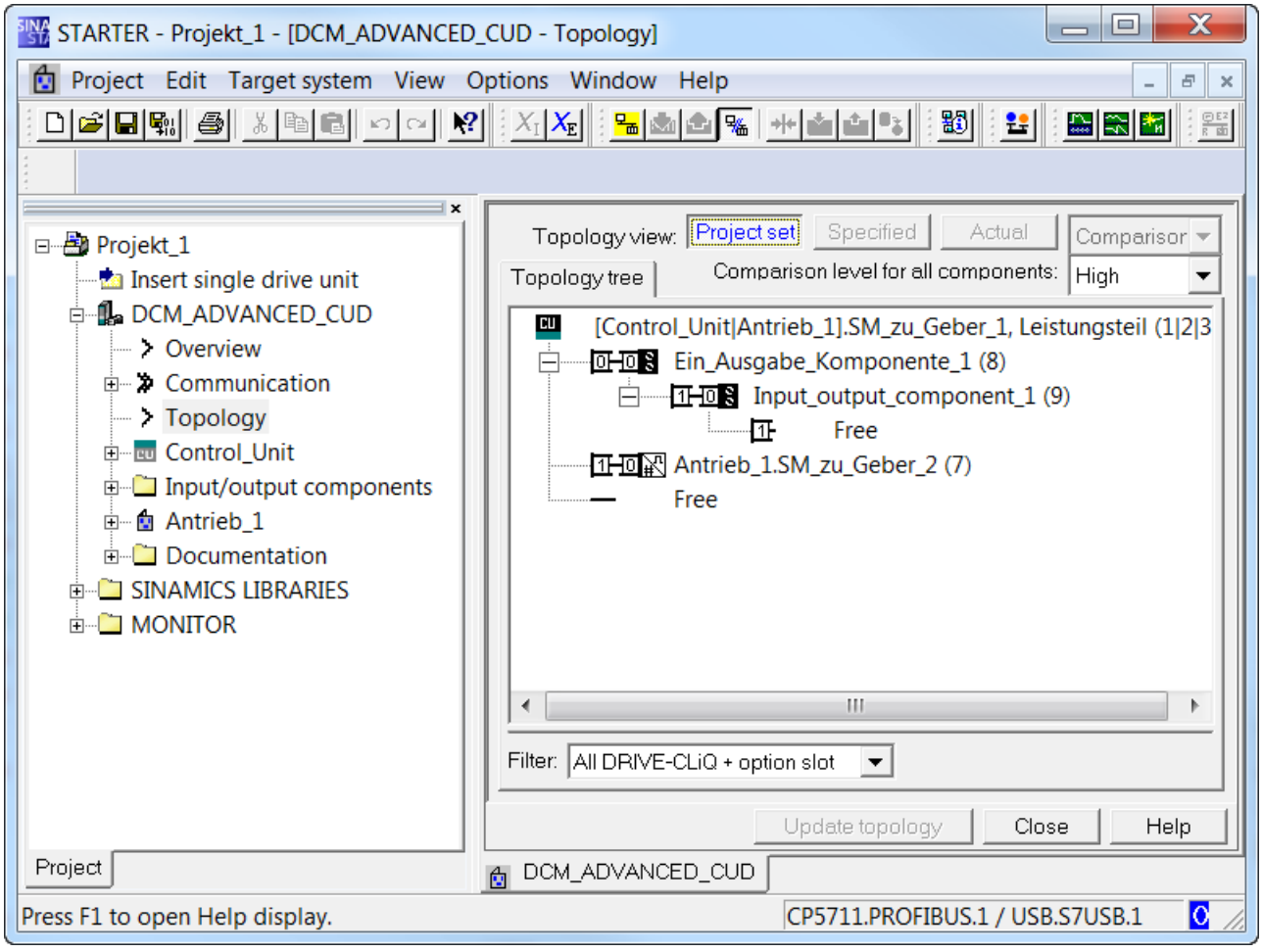

Figure 8-39 Topology

- Re-connect to the target device.
- Load the project into the drive with “Load to target device”.
- Persistently save with RAM→ROM.
- The LED on the Terminal Module now lights up green and you can access the parameters of the additional DOs.

8.7.1.2 Commissioning via parameter assignment

With the electronics power supply switched-off, plug in the Terminal Module with DRIVE-CLiQ at X100 or X101.

Accept the additional components by writing the following parameter to the CU.

Note

When powering up on a drive for the first time, the firmware will, if required, be loaded into the Terminal Module. After successful loading, the LED on the TMxx flashes red/green and alarm A1007 is output. A power ON is required before the components can be used.

p0009 = 1
p9910 = 1 (= accept component)
p0009 = 0

This triggers the firmware to reboot, and the additional components are accepted.

If you then go online with an old STARTER project, the different topologies will be displayed offline and online. With "Load to PG" the changed topology can also be accepted by STARTER

8.7.2 Encoder evaluation (SMC10, SMC30)

When using the optional Sensor Module Cabinet SMC10, a resolver can be used as motor encoder or as second encoder.

When using the optional Sensor Module Cabinet SMC30, a pulse encoder can be used as motor encoder or as second encoder.

Subsequently adding or deleting an SMC10 or SMC30 to/from an existing project is only possible with the STARTER commissioning tool.

8.7.2.1 Add/commissioning (with STARTER)

An encoder evaluation can only be inserted in the offline state.

- Double-click on "Configuration".
  The drive configuration is shown in the operating area of Starter.

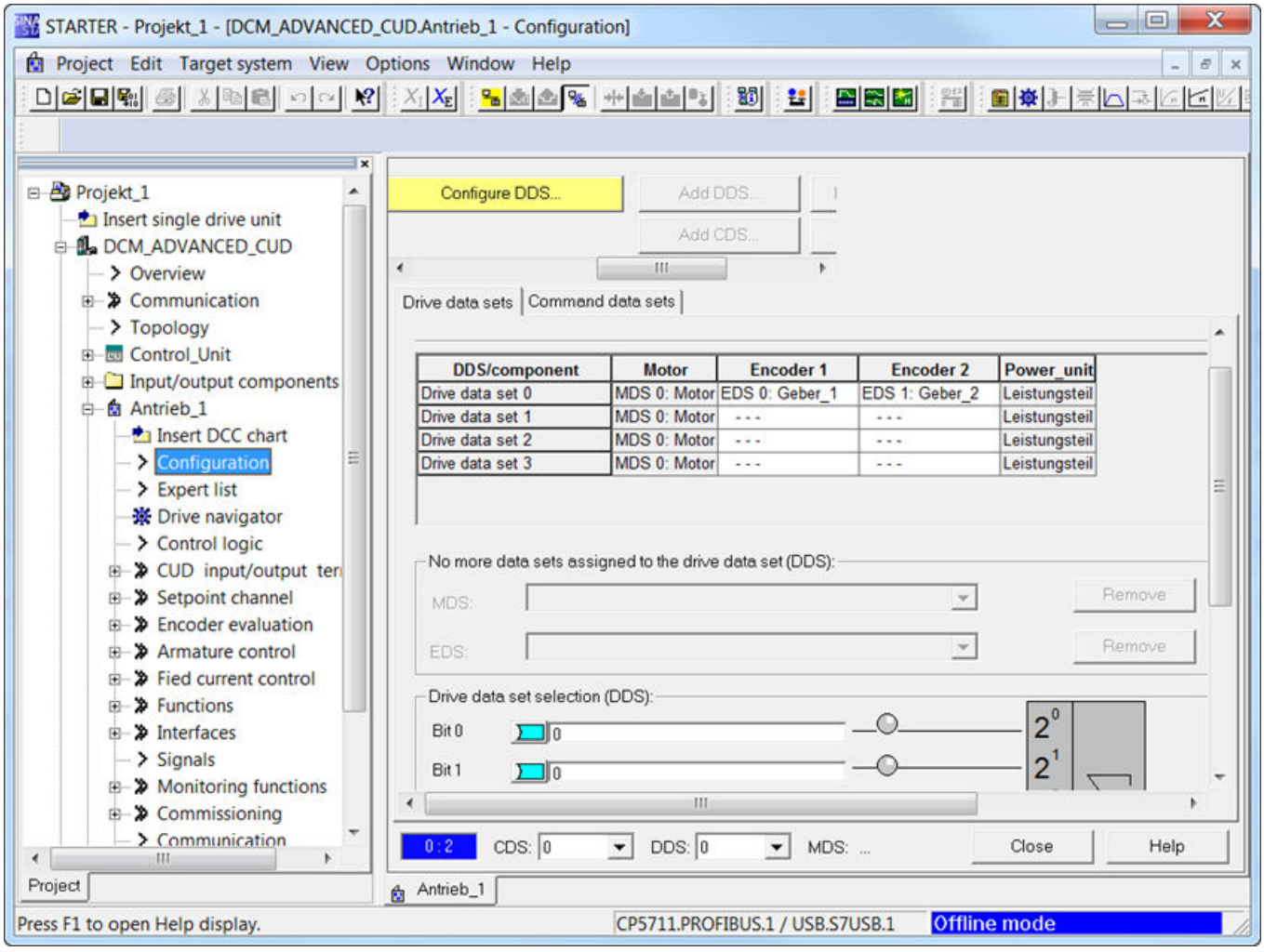

Figure 8-40 Configuration - drive data sets

EDS and DDS can be set and DDS copied in the lower part of the **Drive data sets** tab.

- CDS can be selected and copied under the **Commander data sets** tab:

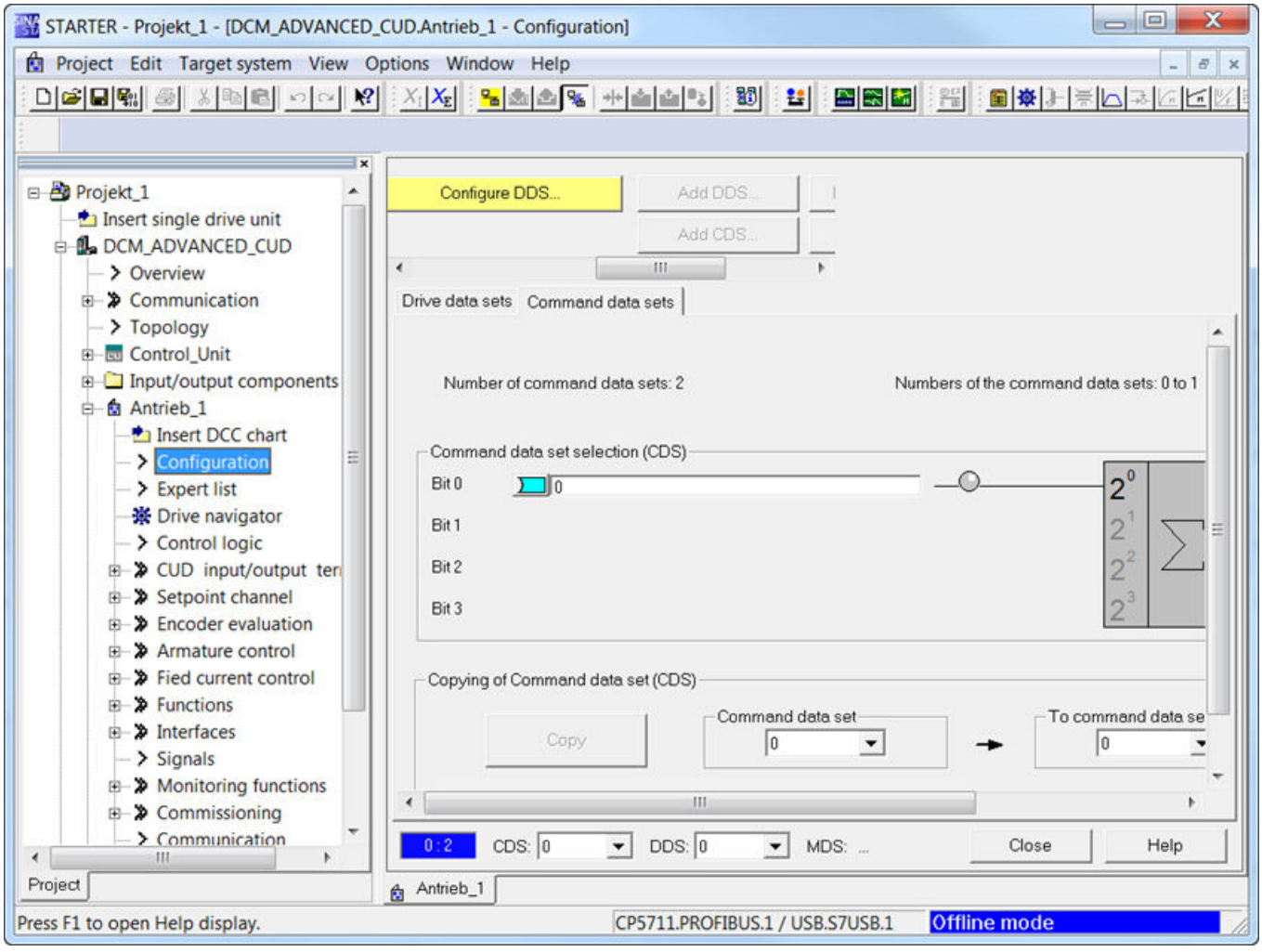

Figure 8-41 Configuration - command data sets

- Click on button **Configure DDS**, the drive Wizard is displayed.
  Continue to the "Encoder" screen and there activate **encoder 2**.
  SMC10: Resolver

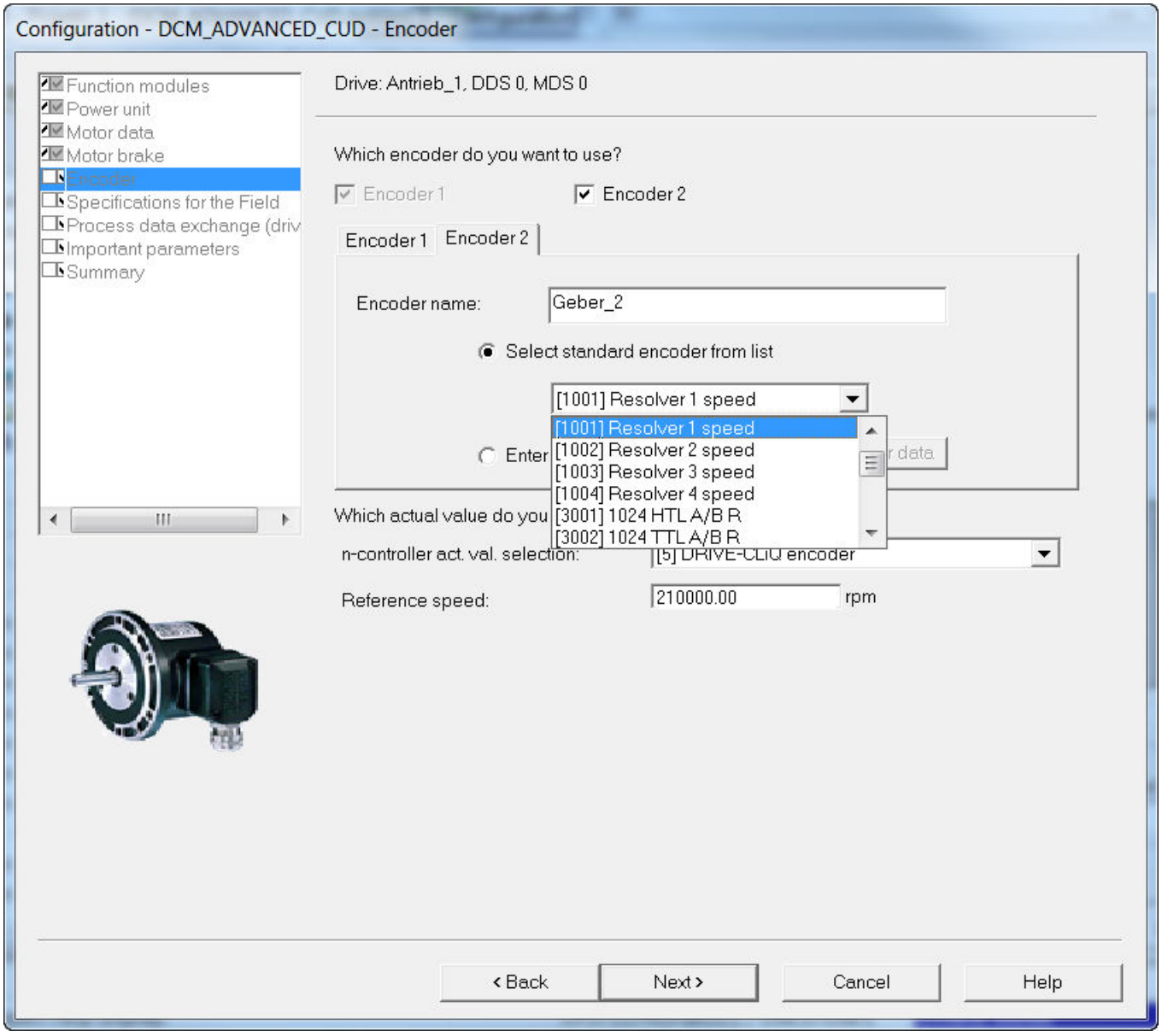

Figure 8-42 Selecting the resolver

SMC30: Pulse encoder

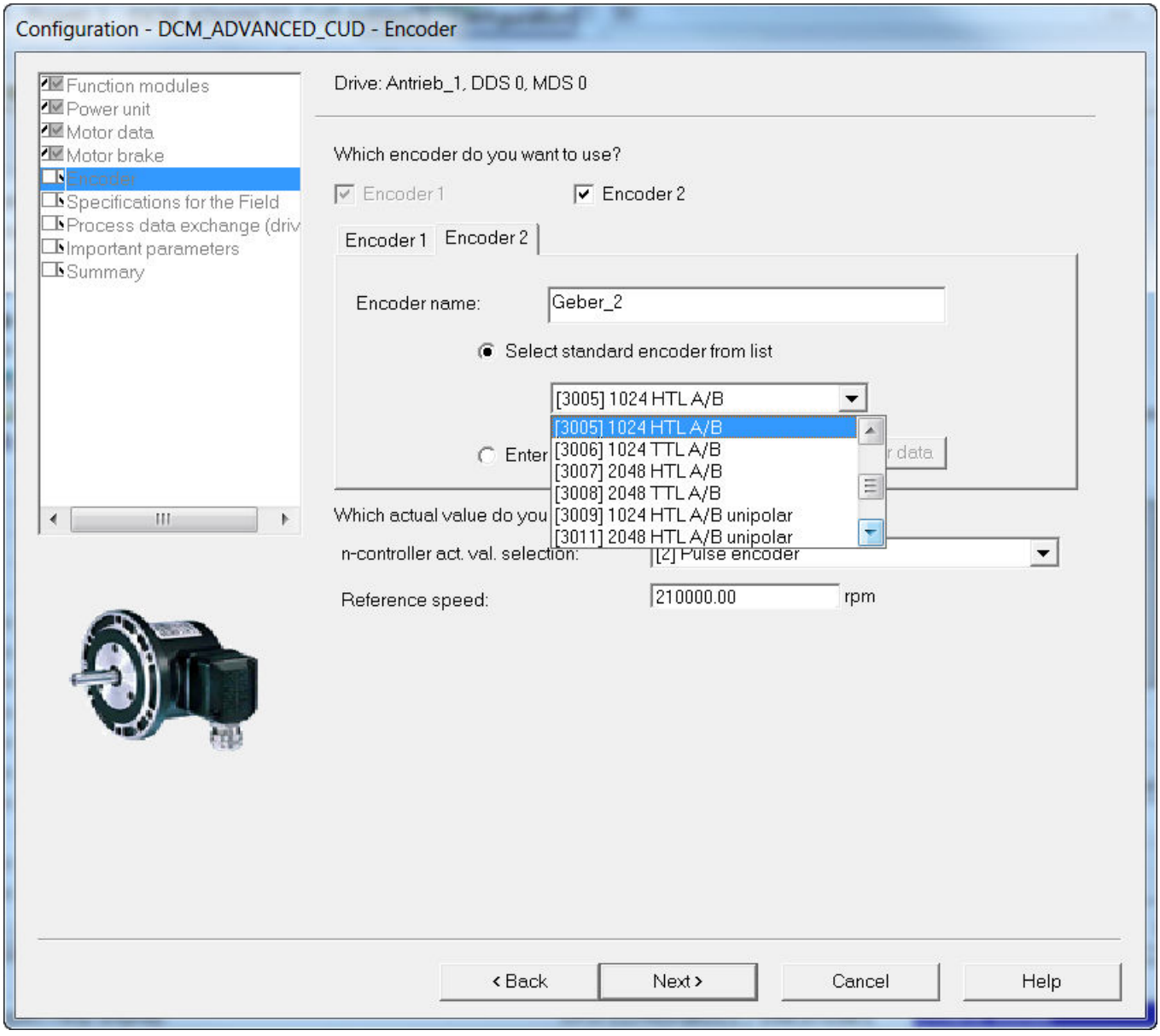

Figure 8-43 Selecting the pulse encoder

- To enter special encoder configurations, click the **Enter data** radio button followed by the **Encoder data** button - and then enter the encoder data.
- If the encoder connected at the SMC10 or SMC30 is also used as actual value for the closed-loop speed control, then under **n-controller act. val. selection**, select entry "[5] DRIVE-CLiQ encoder".
- Work through the wizard up to the end and load the expanded project into the drive.

8.7.2.2 Removal (with STARTER)

An encoder evaluation can only be inserted in the offline state.

- Start the drive wizard via "Configuration" -> "Configure DDS..."
- Work through the wizard with Continue > to the "Encoder" screen form and there, select encoder 2
- Work through the remainder of the wizard up to the end
- Withdraw the encoder evaluation SMC10 or SMC30
- Go online
- Load the project to the drive

8.7.3 CBE20 Communication Board Ethernet

8.7.3.1 Adding online into the drive

The CBE20 is automatically detected when plugged into the slot and is integrated into the system.

Before the module can also be addressed in the network, an IP address and device name must be assigned, see Chapter “Communication via PROFINET IO (Page 458)”.

Note

If PROFINET is to be used only as a commissioning interface but process control is through PROFIBUS, after commissioning the CBE20, the process data interface needs to be set back to PROFIBUS (p8839 = 1).

8.7.3.2 Adding offline in STARTER

In Starter, CBE20 is added when working through the drive wizard.

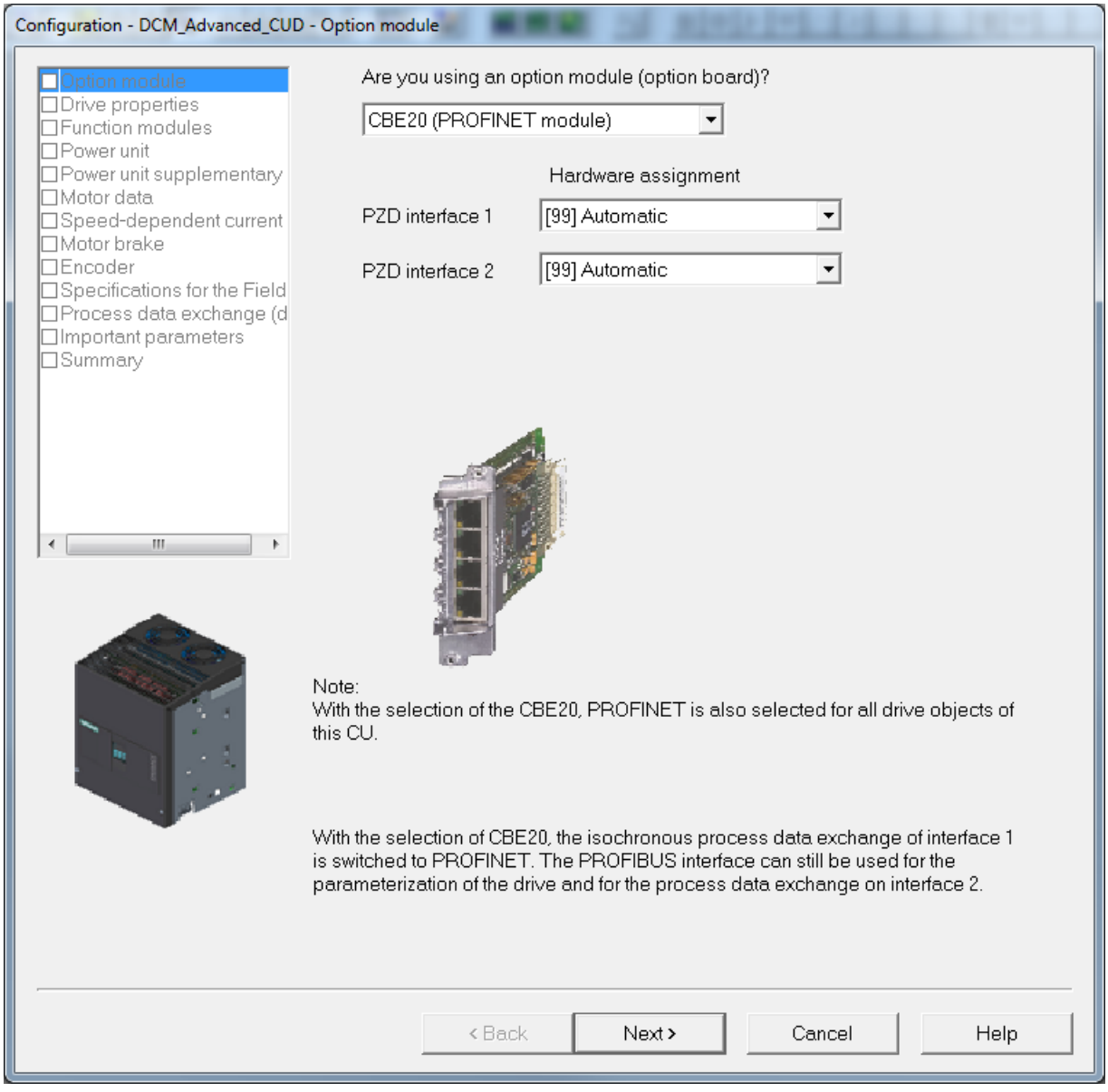

Figure 8-44 Activating the CBE20 option module

- Select the option module CBE20.
- Work through the wizard up to the end and load the expanded project into the drive.
- You can then access the parameters for the CBE20.

You can also subsequently activate option module CBE20.

- Start the configuration wizard via "Control Unit" -> Configuration" -> "Wizard..."
- In the "Option module" screen form, select CBE20
- Work through the remainder of the wizard up to the end

- Go online
- Load the project to the drive

8.7.3.3 Deleting from the drive online

Removing a CBE20 without STARTER always leads to the loss of the parameter assignments which are replaced by the factory settings.

p0009 = 30
p0976 = 1
(recent commissioning)

8.7.3.4 Deleting offline with STARTER

CBE20 can only be removed in the offline state.

- Start the configuration wizard via "Control Unit" -> Configuration" -> "Wizard..."
- In the "Option module" screen form, deselect CBE20
- Work through the remainder of the wizard up to the end
- Remove the CBE20 option board from the Control Unit
- Go online
- Load the project to the drive

8.8 Drive optimization

Basic information

The individual control loops must be optimized when commissioning a drive.

4 control loops must be set or optimized:

- Field current closed-loop control
- Armature current closed-loop control
- Speed control
- EMF closed-loop control

SINAMICS DCM supports this task in 2 ways.

- Quick commissioning
  The controller parameters are calculated from the rated data of the motor and the power unit. No measurements are made. Only the parameters for the field current closed-loop control, the armature current closed-loop control and the speed closed-loop control are determined. The parameters set during the quick commissioning allow reliable drive operation in the majority of cases.
- Optimization runs
  The controller parameters are determined from the rated data of the motor and the power unit and by evaluating measurement results. The parameters of all 4 control loops are determined. The parameters set using the optimization runs can be kept in the majority of cases. In exceptional cases, manual post-optimization is necessary (see the following Chapter "Manual optimization").

Quick commissioning

NOTICE
Both drive optimization types assume that all of the parameters are at their factory settings before the drive is optimized. This is the case when the device is originally shipped. If the parameters have already been changed, or if you are not certain that all of the parameters are at their factory settings, then run the "Restore factory setting" function! With the basic operator panel BOP20: (1)p0009 = 30 (1)p0976 = 1 SINAMICS DCM resets all of the parameters to the factory setting, and executes a power on. The parameters must then be permanently saved by pressing the P key for a longer period of time (at least 3 seconds, however until the display starts to flash).

Procedure

- Start the quick commissioning with p0010 = 1 (= factory setting)
- Set all of the important parameters (see e.g. commissioning steps in Chapter "Commissioning using the BOP20" operator panel)
- Complete the quick commissioning with p3900 = 3 (calculations are performed, p0010 and p3900 are reset to 0)

Commissioning using the BOP20 operator panel:
This procedure is explicitly explained for the commissioning steps in Chapter "Commissioning using the BOP20 Operator Panel (Page 246)".

Commissioning using the AOP30 operator panel:
Quick commissioning is completed (p3900 = 3) as part of the final confirmation. (See Chapter "Full drive commissioning (Page 255)").

Commissioning using the STARTER commissioning tool:
The completion of quick commissioning (p3900 = 3) is selected as part of "Complete" of the Wizard "Configuring the drive unit". (See Chapter "Configuring a drive unit (Page 269)").

After successfully "Loading the project into the target system" (see Chapter “Starting the drive project (Page 290)”), quick commissioning is completed in the SINAMICS DCM.

Optimization runs

⚠ WARNING

Unexpected motor movement during optimization runs

Optimization runs cause movement of the drive which can result in death, severe injury or material damage.

- Observe the general safety instructions.
- When commissioning, carefully ensure that all shutdown functions and (if available) STO-/SS1-t functions are fully functional.

Procedure

〈1〉 The drive must be in operating state o7.0 or o7.1 (enter SHUTDOWN!).

〈2〉 p50051 = 23 Optimization of closed-loop armature current control for inductive load
p50051 = 24 Optimization of closed-loop field-current control
p50051 = 25 Optimization of closed-loop armature current control
p50051 = 26 Optimization of closed-loop speed control
p50051 = 27 Optimization of closed-loop EMF control (incl. field characteristic recording)
p50051 = 28 Recording the friction characteristic
p50051 = 29 Optimization of closed-loop speed control for drives with a mechanical system capable of oscillation

〈3〉 The SINAMICS DCM Control Module goes into operating state o7.4 for a few seconds, and then goes into o7.0 or o7.1 and waits for SWITCH ON and OPERATION ENABLE to be entered.
Enter the commands SWITCH ON and OPERATION ENABLE!
If the switch-on command is not entered within 30 s, this wait state is exited and fault message F60052 is output.

〈4〉 Execution of the optimization run starts once operating state <o1.0 (OPERATION) is reached.

〈5〉 When the optimization run has been completed, the drive goes into operating state o8.0

Note

The optimization runs should be performed in the order specified previously.

Details on the individual optimization runs

p50051 = 23 **Optimization of closed-loop armature current control for inductive load**

This optimization run sets the same parameters as for p50051 = 25. The optimization run uses an algorithm that is more suitable when it comes to feeding large inductances than for the algorithm used with p50051 = 25. As a consequence, for applications where the SINAMICS DCM does not feed a motor - but instead a lifting solenoid or the field of the synchronous generator - it is recommended that instead of p50051 = 25 this optimization run is executed.

p50051 = 24 **Optimization of closed-loop field-current control**
(duration of up to 1 min.)
This optimization run may also be executed without a mechanical load connected.
The following parameters are set automatically:
p50112, field resistance (Rf)
p50116, field inductance (Lf)
p50255, P gain of field-current controller (Kp)
p50256, integral time of field-current controller (Tn)
p51597 field inductance reduction factor

p50051 = 25 **Optimization of closed-loop armature current control**
(takes about 1 min.)
The current controller optimization run may also be executed without a mechanical load connected; if necessary, the drive should be locked.
The following parameters are set automatically:
p50110, armature resistance (Ra)
p50111, armature inductance (La)
p51591, non-linearity factor of armature inductance (La_fak)
p51592, armature commutation inductance (Lk)
p51594, filter inductance for 12-pulse operation (Ls)
p51595, filter inductance reduction factor (Ls_fak)
p51596 filter resistance in 12-pulse operation (Rs)
p50155 P gain of the armature current controller (Kp)
p50156, integral time of armature-current controller (Tn)
p50191 current setpoint filter time



⚠ WARNING

Electric shock during optimization run

The current limits set are not active during the current controller optimization run. 75 % of the rated armature current of the motor flows for approximately 0.7 s.
If live components are touched then this can result in severe injury or death.

- Observe the general safety instructions.

NOTICE

Lock motors

Motors with a permanent field, with a very high level of retentivity or a series field must be locked during this optimization run.

Note

The parameters determined are dependent on the motor temperature. The values set with the motor in the cold state can serve as a good default setting. For drives with a high dynamic performance, the optimization run p50051=25 should be repeated after operating the drive with a load (e.g. with the motor at the operating temperature).

p50051 = 26 **Optimization of closed-loop speed control**

(takes at least 6 s)

The dynamic response of the speed control loop can be selected using p50236, whereby lower values represent a softer closed-loop control.

Before carrying out the speed controller optimization run, p50236 must be set and influences the setting of p50225, p50226, p50228 and p50540.

Where possible, the final mechanical load should be connected to the motor for the purpose of optimizing the speed controller, as the parameters set depend on the measured moment of inertia.

The following parameters are automatically set:
p50225, P gain of speed controller (Kp)
p50226, integral time of speed controller (Tn)
p50228, speed setpoint smoothing time constant
p50540, speed controller acceleration time

Remark:
The speed controller optimization run only takes into account the filtering, set using p50200, of the actual speed controller value and - if p50083 = 1 - the filtering, set using p50745, of the main actual value.
p50225 (gain) is limited to a value of 30.00. The speed controller optimization run always sets p50228 (speed setpoint filtering) to 0. If a Kp of 30.0 was determined by the optimization run, manual re-optimization is recommended (see Chapter "Optimizing the speed controller (Page 319)").

⚠ WARNING

Unexpected movement of the motor during optimization run

During the speed controller optimization run, the motor is accelerated at a maximum of 45% of its rated armature current. The motor can reach speeds of up to approximately 20% of the maximum speed.

The movements of the drive can result in death, severe injury or material damage.

- Observe the general safety instructions.

p50051 = 27 **Optimization of closed-loop EMF control (incl. field characteristic recording)**

(duration, approx. 1 min)

This optimization run must be executed if field-weakening operation has been selected (p50081 = 1), if closed-loop torque control (p50170 = 1) or torque limiting (p50169 = 1) has been selected, or if a variable field current setpoint has been entered.

This optimization run may also be started without a mechanical load. The following parameters are set automatically:

p50120 to p50139	Field characteristic (magnetization characteristic) of motor
p50275	P gain of EMF controller (Kp)
p50276	Integral time of EMF controller (Tn)

Remark:

In order to determine the magnetization characteristic, during this optimization run the field-current setpoint is reduced to a minimum value of 8% (starting from 100% of the motor's rated excitation current as specified in p50102). Setting p50103 to values < 50% of p50102 for the duration of this optimization run limits the value entered for the field-current setpoint to the minimum value specified in p50103. This may be necessary for uncompensated motors with an extremely high armature response.

The magnetization characteristic approaches 0 along a linear path (starting from the measuring point), with the minimum field-current setpoint.

To execute this optimization run, the minimum excitation current for the motor (p50103) must be set to a lower value than 50% of the motor's rated excitation current (p50102).

⚠ WARNING

Unexpected movement of the motor during optimization run

During this optimization run, the drive accelerates to approx. 80% of the rated motor speed. The maximum armature voltage is 80% of the rated armature voltage of the motor (p50101).

The movements of the drive can result in death, severe injury or material damage.

- Observe the general safety instructions.

p50051 = 28 **Recording the friction characteristic**

(duration, approx. 1 min)

The following parameters are set automatically:

p50520 to p50530 Friction characteristic

Remark 1:
The friction characteristic is only active in operation if it is manually activated with p50223 = 1!

Remark 2:
In order to execute this optimization run, the speed controller must not be parameterized as a pure P controller or as a controller with droop.

⚠ WARNING

Unexpected movement of the motor during optimization run

During this optimization run, the drive accelerates up to its maximum speed.

The movements of the drive can result in death, severe injury or material damage.

- Observe the general safety instructions.

p50051 = 29 **Optimization of closed-loop speed control for drives with a mechanical system capable of oscillation**

(duration up to 10 min)

The following parameters are set automatically:

p50225 P gain of the speed controller (Kp)

p50226 Integral time of the speed controller (Tn)

p50228 Speed setpoint, smoothing time constant

p50540 Speed controller acceleration time

The frequency response of the controlled system for frequencies between 1 and 100 Hz is recorded during this optimization run.

For this purpose, the drive is first accelerated to a basic speed (p50565, factory setting = 20%). A sinusoidal speed setpoint with a low amplitude (p50566, factory setting = 1%) is then switched in. The frequency of this additional setpoint is changed in 1 Hz increments from 1 to 100 Hz. For each frequency, an average is generated over a specific time (p50567, factory setting = 1 s).

The value set at p50567 essentially defines the duration of this optimization run. For a setting of 1 s it takes about 3 to 4 min.

The measured frequency response of the controlled system forms the basis for determining its optimal speed controller setting.

⚠ WARNING

Uncontrolled motor movement

For motors with a suspended or drawing load, uncontrolled movement can occur during the optimization run which can lead to death, serious injury or property damage.

- The optimization run must not be executed if the motor is connected to a mechanical load that is able to move it while it is in a torque-free state (e.g. a suspended or drawing load).

Notes regarding optimization runs

For drives with limited travel distance, the optimization run for field weakening (p50051 = 27) should be interrupted by entering the SHUTDOWN command at the earliest after the 1st field weakening measuring point has been plotted or the friction characteristic has been plotted (p50051 = 28) and at the earliest after determining the measuring point at 10% of the maximum speed - without fault message F60052 being initiated. Once the optimization run in question (p50051 = 27 or p50051 = 28) has been restarted, it will resume at a more advanced point, meaning that it can be completed in several stages even in cases where the travel distance is limited.

In the following cases, each optimization run is completely executed again after a restart:

- If a fault occurs during the optimization run
- If the electronic supply is switched off prior to restarting the optimization run in question
- If a different drive data set from the previous one is selected
- If a different optimization run is started in the meantime

The parameters for the drive data set that has been selected in each case are optimized.

The drive data set selection must remain the same throughout the optimization runs to avoid a fault being output.

8.9 Manual optimization

Manual optimization is best performed using the STARTER commissioning tool.

STARTER provides the following functions for this purpose:

- Function generator
- Trace

8.9.1 Optimization of closed-loop armature current control

Determining the armature circuit parameters (3 options)

1. **Determining the armature-circuit parameters according to the motor list**

   Take the armature circuit resistance (p50110) and armature circuit inductance (p50111) from the motor manufacturers data.

   Disadvantage: The data is very imprecise and/or the actual values deviate significantly.

   Feeder cable resistances are not taken in the armature-circuit resistance. Additional smoothing reactors and feeder cable inductances are not taken into account in the armature-circuit inductance.

2. **Roughly estimating the armature-circuit parameters from the rated data for the motor and line supply**

   $$p50110 = \frac{p50101}{10 \times p50100}$$

   p50110 = Armature-circuit resistance [Ω]
   p50101 = Rated armature voltage for motor [V]
   p50100 = Rated armature current for motor [A]

   The basis of this formula is that for the rated armature current, there is a drop of 10% of the rated armature voltage across the armature circuit resistance Ra.

   $$p50111 = \frac{1.4 \times r50071}{p50100}$$

   p50111 = Armature-circuit inductance [mH]
   r50071 = Rated armature supply voltage for units [V]
   p50100 = Rated armature current for motor [A]

   This formula is based on the empirical value: The transition point from discontinuous to continuous current is approximately 30% of the rated motor armature current.

3. **Determining the armature circuit parameters by measuring the current/voltage**
   - **Establish closed-loop current controlled operation**
     - p50084 = 2: Select closed-loop current controlled operation
     - p50153 = 0: Precontrol disabled
     - p50082 = 0: Switch-off the field to prevent motor from moving and, where necessary, lock the rotor of the DC motor if retentiveness is too high.
     - p50354 = 5 %: Threshold for overspeed protection
     - Enter 0 for the main setpoint.
     - If "OPERATION ENABLE" has been applied and the "SHUTDOWN" command is entered, an armature current of approximately 0% will now flow.
   - **Calculate the armature circuit resistance p50110 from the armature current and armature voltage**
     - Gradually increase the main setpoint (shown at r52011) until the actual armature current value (r50019 as a % of the unit's rated armature current) reaches approximately 70% of the motor's rated armature current.
     - Calculate the armature circuit resistance:
       Ra[Ω] = r50038 / (r50019 × p50100) = armature voltage [V] / armature current [A]
   - **Calculate the armature circuit inductance p50111 from the armature current at the transition point from discontinuous to continuous current**
     - Make an oscilloscope trace of the armature current.

- Starting from 0, gradually increase the main setpoint (shown at r52011) until the armature current reaches the transition point from discontinuous to continuous current.
- Calculate the armature circuit inductance using the following formula:
  La[mH] = 0.4 × r50015 / (r50019 × p50100)
  = armature voltage [V] / armature current at the transition point from discontinuous to continuous current [A]

Overall optimization of the armature circuit

- **Checking the precontrol characteristic**

  Procedure

  - Set the function generator to a triangular waveform (0 % to 100 %), period = 10000 ms
  - Supply point: p50601[4] (see function diagram 6855)
  - Set p50082 = 0 (field off)
  - p50153 = 3 (influence of EMF disabled)
  - Record signals r52121 (output, precontrol) and r52110 (output, armature current controller)
  - The parameters of the precontrol (Ra [p50110], La [p50111] and λa [p51591]) are correctly set if the armature current controller output has the lowest possible value (e.g. less than 5 %) over the complete setpoint range.

- **Checking the step response**

  Procedure

  - Set the function generator to a squarewave, with

    step height = e.g. 5 %
    offset = various values, e.g. 80 %
    period = 1000 ms
    pulse width = 500 ms
  - Supply point: p50601[4] (see function diagram 6855)
  - Set p50082 = 0 (field off)
  - Record signals r52118 (Ia-set) and r52117 (Ia-act)
  - Change controller parameters Kp (p50155) and Tn (p50156) until the step response provides a satisfactory result.
  - In order to eliminate the influence of non-linearity of the armature circuit inductance and gating unit, the armature current controller adaptation can be activated (see function chart 6855).

8.9.2 Optimization of closed-loop field-current control

Determining the field circuit resistance (2 options)

1. **Roughly estimate the field circuit resistance from the rated motor data**
   p50112 = rated excitation voltage/rated excitation current of motor
2. **Determine the field-circuit resistance by comparing the field current setpoint and actual value**
   - p50112 = 0: Results in a 180° field precontrol output and, therefore, field current actual value = 0
   - p50082 = 3: So that the field remains permanently switched on, even when the line contactor drops out
   - p50254 = 0 and p50264 = 0: Only field precontrol active; field-current controller disabled
   - Set p50102 to rated excitation current.
   - Increase p50112 until the actual field current (r50035 converted to amperes using r50073[1]) equals the required setpoint (p50102).
   - Set p50082 back to the system's operating value.

Overall optimization of closed-loop field-current control

- **Checking the precontrol characteristic**
  Procedure
  - Set the function generator to a triangular waveform (0 % to 100 %), period = 10000 ms
  - Supply point: p50611[0] (see function diagram 6905)
  - Set p50082 = 3 (field continuously on)
  - Record the signals r52271 (output, precontrol) and r52260 (output, field current controller)
  - The parameters of the precontrol (Rf [p50112], Lf [p50116] and λf [p51597]) have been correctly set if the output of the field controller has the lowest possible value (e.g. less than 5 %) over the complete setpoint range.
- **Checking the step response**
  Procedure
  - Set the function generator to a squarewave, with
    step height = e.g. 5 %
    offset = various values, e.g. 80 %
    period = 1000 ms
    pulse width = 500 ms
  - Supply point: p50611[0] (see function diagram 6905)
  - Set p50082 = 3 (field continuously on)
  - Record signals r52268 (If-set) and r52265 (If-act)

- Change controller parameters Kp (p50255) and Tn (p50256) until the step response provides a satisfactory result.
- The field current controller adaptation can be activated (see function chart 6908) to eliminate the influence of non-linearity of the field inductance and gating unit.

8.9.3 Optimizing the speed controller

Basic information

The objective of the closed-loop control is to compensate the system deviation as a result of changes to the setpoint and disturbances.

The evaluation is performed in the time domain:

- The control loop fulfills the requirement for steady-state accuracy, if the system deviation as a result of a setpoint step (reference input) converges towards zero. The rise time t_{an} and settling time t_{aus} specify the speed.
- The overshoot defines the damping. For a step change of the setpoint or disturbance variable, the controlled variable must not excessively overshoot the steady-state final value.

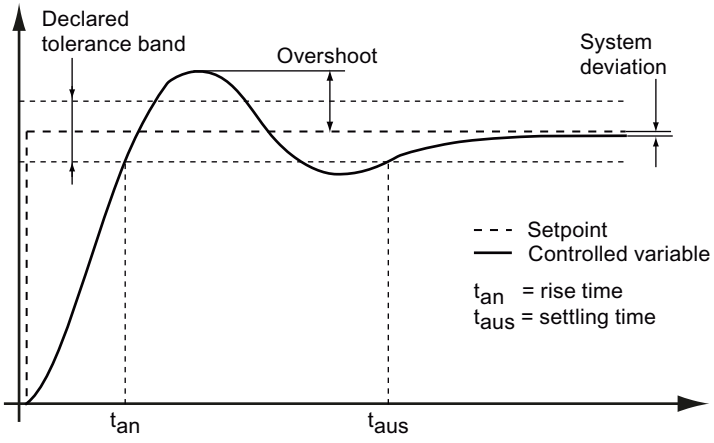

Figure 8-45 Setpoint step to evaluate a controller

Controller optimization

Procedure

- Set the function generator to a triangular waveform with
  step height = 5 %
  offset = 10 %
  period = 1000 ms
  pulse width = 500 ms
- Supply point: p50625[C] (see function diagram 6810)
- Record signals r52174 (n-set) and r52167 (n-act)

Assessment

If the step response of the speed controller is recorded after performing the optimization run for the speed controller, then the significant increase of the setpoint step can be clearly seen - which is characteristic for optimization according to the symmetrical optimum.

A controller adjusted according to the symmetrical optimum has a significant overshoot, however, a favorable response to disturbances.
This optimization has especially established itself in drive technology as many systems require a good disturbance variable compensation. This is the reason why the optimization run for the speed controller sets the controller parameters according to the symmetrical optimum.

An improved response to setpoint changes with the response to disturbances remaining the same can be achieved using the reference model. See Chapter "Function descriptions", Section "Speed controller".

Operation

9

9.1 Basic information

9.1.1 Parameter

Parameter types

The following adjustable and display parameters are available:

- Adjustable parameters (can be written and read)
  These parameters have a direct effect on how a function responds.
  Example: Ramp-up and ramp-down time of a ramp-function generator
- Display parameters (can only be read)
  These parameters are used to display internal variables.
  Example: Actual motor current

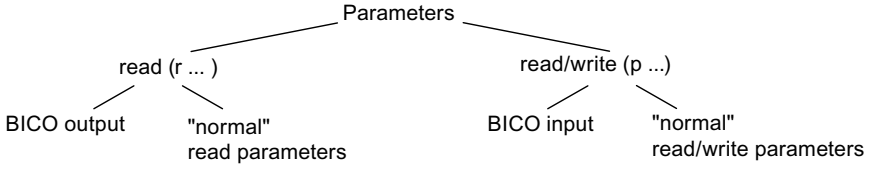

Figure 9-1 Parameter types

All these drive parameters can be read via PROFIBUS and changed by means of p parameters using the mechanisms defined in the PROFIdrive profile.

Parameter categories

The parameters of the individual drive objects are categorized into data sets as follows:

- Data set independent parameters
  These parameters exist only once per drive object.
- Data set dependent parameters
  These parameters can exist several times for each drive object and can be addressed via the parameter index for reading and writing. A distinction is made between various types of data set:
  - CDS: Command Data Set
    By parameterizing several command data sets and switching between them, the drive can be operated with different pre-configured signal sources.
  - DDS: Drive Data Set
    The drive data set contains the parameters for switching between different automatic speed control configurations.

The CDS and DDS can be switched over during normal operation. Additional types of data set also exist, but these can only be activated indirectly by means of a DDS changeover.

- EDS - Encoder Data Set

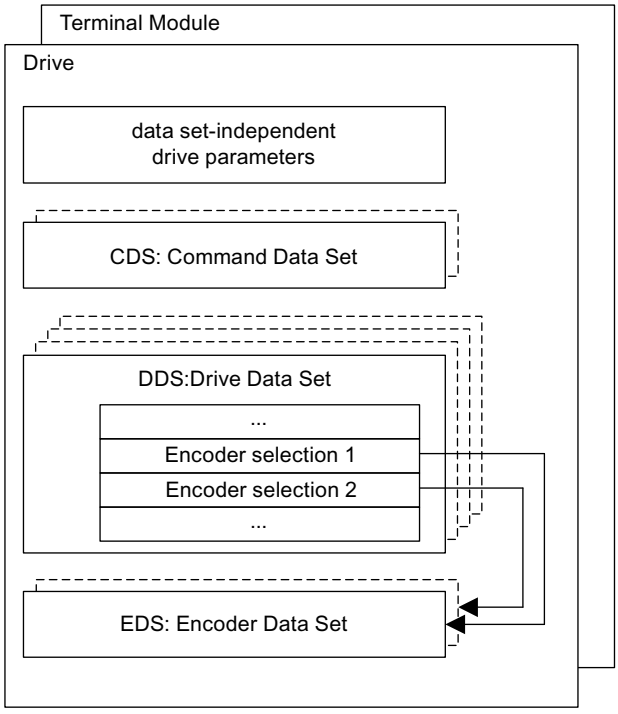

Figure 9-2 Parameter categories

Saving parameters in a non-volatile memory

The modified parameter values are stored in the volatile RAM. When the drive system is switched off, this data is lost.

The data must be saved in the non-volatile memory, as described below, so that the changes are available the next time the drive is switched on.

There are various methods:

- Save parameters using the BOP20:
  press the P button on the BOP20 until the display flashes.
  Flashing stops once the parameters have been saved.
- Saving parameters with STARTER
  See "Copy RAM to ROM" function
- Saving parameters
  p0977 = 1; automatically reset to 0

Note

The power supply to the Control Unit may first be switched off only after saving has finished (i.e. after saving has started, wait until the parameter has the value 0 again).

Resetting parameters

The (loaded to the RAM) parameter values can be reset to the factory setting as follows:

p0009 = 30	Parameter reset
p0976 = 1	Start restoring all parameters to their factory settings

After this has been done, p0976 is automatically set to 0 and p0009 is set to 1.

The parameter values are reset in the volatile memory (RAM). If the reset parameter values are also to be transferred into the ROM, then "Save parameters in a non-volatile memory" must be executed.

Deleting all user data

User data includes:

- parameter values
- additional parameter data sets (see p0802, p0803, p0804)
- the DCC block library
- DCC charts

This data is saved in the non-volatile memory (ROM). All user data is deleted from the ROM as follows:

p0009 = 30	Parameter reset
p0976 = 200	Start to delete all user data

The operation may take several minutes. The device automatically powers up during this time. As a result, the device in STARTER goes offline. Re-connect with the drive. After this has been done, p0976 is automatically set to 0 and p0009 is set to 0.

Note

Data on the memory card is not deleted by setting p0976 = 200. In spite of this, when deleting all user data, it is not permissible that a memory card is inserted. An inserted memory card would mean that for an automatic ramp-up after p0976 = 200, as usual, the data would be read from the memory card (see also Chapter "Memory card functions"). The device would power-up with the parameter assignment from the memory card.

Access level

The parameters are subdivided into access levels. The SINAMICS DCM List Manual specifies the access level at which the parameter can be displayed and modified. The required access levels 0 to 4 can be set in p0003.

Table 9-1 Access levels

Access level	Remark
0 User-defined	Parameter from the user-defined list (p0013)
1 Standard	Parameters for the simplest possible operations (e.g. p50303 = ramp-function generator ramp-up time)
2 Extended	Parameters for handling the basic functions of the device
3 Expert	Expert knowledge is already required for these parameters (e.g. knowledge of assigning BICO parameters).
4 Service	Please contact your sales partner for the password for parameters with access level 4 (Service). It must be entered into p3950.

9.1.2 Data sets

CDS: Command data set

The BICO parameters (binector and connector inputs) are grouped together in a command data set. These parameters are used to interconnect the signal sources of a drive.

By parameterizing several command data sets and switching between them, the drive can be operated with different pre-configured signal sources.

A command data set contains the following (examples):

- Binector inputs for control commands (digital signals)
  - ON/OFF, enable signals (p0844, etc.)
  - Jog (p1055, etc.)
- Connector inputs for setpoints (analog signals)
  - Speed setpoint (p50433)
  - Torque setpoints (p50500, p50501)

A drive object can manage two command data sets.
The following parameters are available for selecting command data sets and for displaying the currently selected command data set:

- Binector input p0810 BI: Command data set (CDS) selection
- r0836: Displays selected data set

Example: Switching between command data set 0 and 1

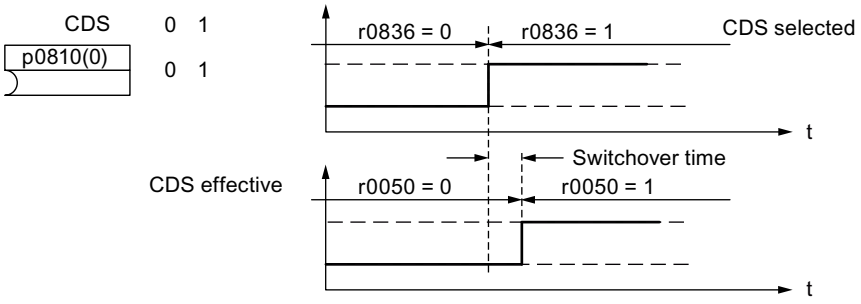

Figure 9-3 Switching the command data set (example)

DDS: Drive data set

A drive data set contains various adjustable parameters that are relevant for open-loop and closed-loop drive control:

- Numbers of the assigned encoder data sets:
  - p0187 and p0188: Up to 2 assigned encoder data sets (EDS)
- Various control parameters, e.g.:
  - Speed limits min./max. (p50512, p50513)
  - Characteristic data of ramp-function generator (p50295 ff)
  - Characteristic data of controller (p50540 ff)
  - ...

The parameters that are grouped together in the drive data set are identified in the SINAMICS DCM List Manual by "DDS" and are provided with index [0...n].

It is possible to parameterize several drive data sets. You can switch easily between different drive configurations (control type, motor, encoder) by selecting the corresponding drive data set.

A drive object can manage 4 drive data sets.

Binector inputs p0820 and p0821 are used to select a drive data set. They represent the number of the drive data set (0 to 3) in binary format (where p0821 is the most significant bit).

- p0820 BI: Drive data set selection DDS, bit 0
- p0821 BI: Drive data set selection DDS, bit 1

EDS: Encoder data set

An encoder data set contains various adjustable parameters for the connected encoder that are relevant for configuring the drive.

- Adjustable parameters, e.g.:
  - Encoder interface component number (p0141)
  - Encoder component number (p0142)
  - Encoder type selection (p0400)

The parameters that are grouped together in the encoder data set are identified in the parameter list by "EDS" and are provided with index [0...n].

A separate encoder data set is required for each encoder controlled by the Control Unit. Up to 2 encoder data sets are assigned to a drive data set via parameters p0187 and p0188.

It is only possible to switch an encoder data set by means of a DDS switchover. When a drive data set is selected, the assigned encoder data sets are selected automatically.

Example of data set assignment

Table 9-2 Example, data set assignment

DDS	Encoder 1 (p0187)	Encoder 2 (p0188)
DDS 0	EDS 0	EDS 1
DDS 1	EDS 0	EDS 0
DDS 2	EDS 0	EDS 0
DDS 3	EDS 1	-

9.1.2.1 Function diagrams and parameters

Function diagrams (see the SINAMICS DCM List Manual)

- 8560 Command data sets (CDS)
- 8565 Drive data sets (DDS)
- 8570 Encoder data sets (EDS)

Overview of important parameters (refer to the SINAMICS DCM List Manual)

Adjustable parameters

- p0140 Encoder data sets (EDS) number
- p0170 Command data sets (CDS) number
- p0180 Drive data sets (DDS) number
- p0187 Encoder 1 encoder data set number
- p0188 Encoder 2 encoder data set number

- p0809 Copy command data set (CDS)
- p0810 BI: Command data set CDS bit 0
- p0819[0...2] Copy drive data set DDS
- p0820 BI: Drive data set selection DDS, bit 0
- p0821 BI: Drive data set selection DDS, bit 1

9.1.2.2 Handling data sets

Copying a command data set

Set parameter p0809 as follows:

1. p0809[0] = Number of the command data set to be copied (source)
2. p0809[1] = Number of the command data to which the data is to be copied (target)
3. p0809[2] = 1

Starts copying.

Copying is finished when p0809[2] = 0.

Copying a drive data set

Set parameter p0819 as follows:

1. p0819[0] = Number of the drive data set to be copied (source)
2. p0819[1] = Number of the drive data set to which the data is to be copied (target)
3. p0819[2] = 1

Starts copying.

Copying is finished when p0819[2] = 0.

Uncommissioned data sets

Drive commissioning can be completed even if uncommissioned data sets (EDS, DDS) are available.

Uncommissioned data sets are marked as "uncommissioned".

The attributes are displayed in STARTER or in the expert list or OPs.

Activating of these data sets is not permitted and will be rejected with an error.
Assigning these data sets to a drive data set (DDS) is only possible with a commissioning step (p0009 ≠ 0, p0010 ≠ 0).

Note

If there is no DDS dataset with the attribute "commissioned", the drive remains in a controller inhibit state.

9.1.3 Drive objects

A drive object is a self-contained software function with its own parameters and potentially its own faults and alarms. Drive objects can be provided as standard (e.g. automatic speed control), or can be added individually or in groups times (e.g. TM31).

Properties of a drive object:

- Separate parameter space
- Separate window in STARTER
- Separate fault/alarm system
- Separate PROFIdrive telegram for process data

Drive objects in SINAMICS DCM

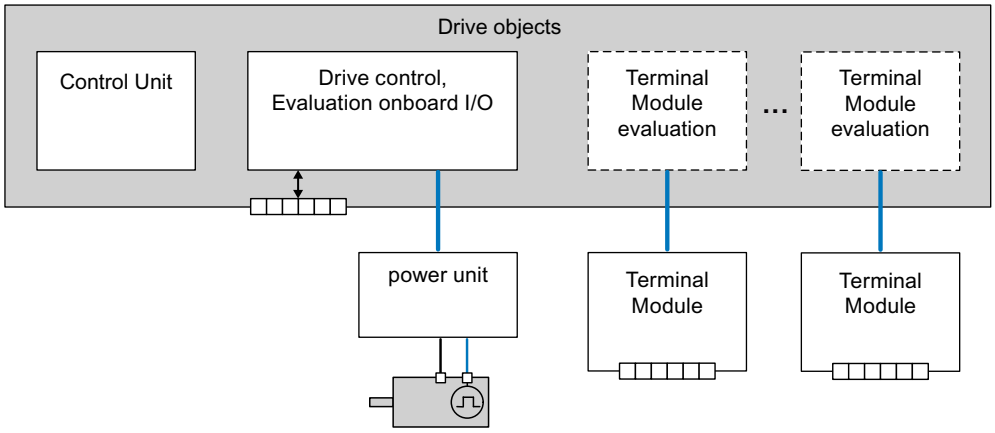

Figure 9-4 Drive objects

- Automatic speed control (DC_CTRL)
  Automatic speed control handles closed-loop control of the motor. The I/Os on the CUD are evaluated within this drive object.
- Control Unit (CU_DC)
  This drive object contains a variety of different system parameters.
- Evaluation of optional Terminal Module
  An independent drive object handles evaluation of each optional Terminal Module.

Configuring drive objects

If, after first commissioning, additional drive objects are configured or deleted, they must be added or deleted in STARTER or activated through parameters (see Chapter "Commissioning optional additional modules (Page 297)").

Note

Each installed drive object is allocated a number between 0 and 63 during first commissioning so that they can be identified internally.

Overview of important parameters (refer to the SINAMICS DCM List Manual)

Adjustable parameters

- p0101 Drive object numbers
- p0107 Drive object type
- p0108 Drive object configuration

Display parameters

- r0102 Number of drive objects

Standard drive objects

- Automatic speed control
- Control Unit

9.1.4 Memory card functions

This chapter describes the basic functions of the memory card in the SINAMICS DCM system.

Basic information

The CUD (Control Unit for the SINAMICS DCM) manages three memory areas:

- A volatile memory, the **RAM**, also called work memory
- A non-volatile memory, the **ROM**, also called **flash memory**
- An optionally available portable memory card

Note

Memory cards can be ordered as an option (S01/S02) or as accessories, see Chapter "Ordering information for options and accessories (Page 32)".

The functionality in SINAMICS DCM is not guaranteed for memory cards from other manufacturers.

SINAMICS DCM does not evaluate the position of the write protection slide switch.

Before removing the memory card from the slot, it is recommended that the "Safely remove memory card" function is selected using p9400 = 2. Wait for p9400 = 3 ("Card can be safely removed"). P9400 is set to 0 after the memory card has been removed ("No memory card inserted").

The work memory receives all project information and application programs while the device is being operated. To save the current data from the work memory, you must copy it to non-volatile memory **before** switching off, see Chapter "Commissioning", "Copy RAM to ROM" function.

An optional memory card is used:

- For saving various parameter data sets
- For transferring the parameter data sets to additional SINAMICS DCM drives
- For series commissioning

The memory card is required for the following applications:

- To install firmware updates
- To load the DCC block library into the drive
- To load additional languages to the AOP30 (with the exception of German, English and Chinese)
- To store time-limited, triggered trace recordings (offline long-term trace)
- To save diagnostics file Diagstor.spd
- To communicate via Modbus TCP (see Chapter "Communication via MODBUS TCP (Page 517)")
- To communicate via SINAMICS Link (see Chapter "Communication via SINAMICS Link (Page 484)")

NOTICE

Undesirable response or data loss if the memory card is improperly handled

For disturbance-free operation of the control electronics (CUD), the memory card recommended by Siemens must only be inserted in the device when the SINAMICS DCM is switched-off and in a no voltage condition. Inserting the card when operational can result in undefined states of the device with the corresponding effects.
Ideally, the memory card is ordered when purchasing the SINAMICS DCM, and is installed before commissioning.

If the memory card is not inserted from the very beginning, and is only inserted after being requested to do so, for example by Technical Support, then it must first be completely cleared. This prevents that data possibly saved on the memory card overwrites the actual parameter assignment of the DCM.

To avoid data loss when removing the memory card, it must be logged off from the device as described in Section "Safely removing the memory card".

Note

The memory card supplied from Siemens as option S01 or S02 includes, when supplied, a dump of the internal device firmware. These files are required to update the firmware as well as to use the "SINAMICS Link" function. These files can be deleted for other applications.

Before you use the card for the functions described in this chapter, copy these files to a local folder of your PG/PC and delete the files on the memory card.

Safely removing the memory card

Removing the memory card must be requested using p9400.

Procedure:

p9400 = 2	Request "Safe removal" of the memory card
p9400 = 3	Feedback signal: "You can safely remove the memory card" Remove the memory card
p9400 = 100	Feedback signal: "It is not possible to safely remove the memory card" SINAMICS DCM is accessing the memory card. Leave the memory card in the unit and try again later.
p9400 = 0	Message: no memory card inserted

Note

If the memory card is removed without a request being made, this can destroy the file system on the memory card.

Parameter data sets

Parameter data sets represent all of the parameters of a project - including the DCC charts and the project itself. Parameter data sets differ on the basis of drive configuration (power unit, motor, encoder, etc. used) and application (e.g. function modules, control mode).

Different data volumes can be saved in the three memory areas:

- ROM: Four parameter data sets with the indices 0, 10, 11, and 12
- The parameter data set with the index 0 is active in the RAM
- Memory card: Depending on the free storage space, up to 101 parameter data sets (indices 0 to 100)

Note

The DCC library itself is not saved as a part of the parameter data set.

Copying parameter data sets to the memory card

There are three options for copying parameter data sets to the memory card:

- **The electronics power supply is switched off**
  - Insert the memory card that does **not** contain a parameter data set with index 0 into the CUD.
  - Switch on the electronics power supply
  - The parameter data set with index 0 is loaded from the ROM into the RAM
  - Then the complete and updated parameter data set with the index 0 is automatically copied to the memory card **without a prompt**.
- **The electronics power supply is switched on**
  - Execute command "RAM to ROM" (using p0977 = 1 - or by pressing the "P" key on the BOP20 operator panel until the display starts to flash). The actual parameter data set is copied automatically, first to the ROM and then to the memory card with index 0. If the memory card already contains a parameter data set with the index 0, this will be overwritten without a prompt appearing.
- **The electronics power supply is switched on**
  - The save operation is initiated via parameter:
    p0802 = 0 ... 100: Target on the memory card
    p0803 = 0/10/11/12: Source in the device memory
    p0804 = 2: Start data transfer

Note

If when switching on, a memory card with a parameter data set with index 0 is inserted in the CUD, the parameter data set with index 0 in the non-volatile memory of the CUD is overwritten with the parameter data set with index 0 on the memory card.

Note

When a memory card is inserted, the RAM to ROM command (p0977 = 1) will copy the parameter data set with the index 0 from the ROM to the memory card. A parameter data set that might have been previously saved on the memory card is overwritten.

Note

While saving (BOP20 flashes, RDY LED flashes), the electronic power supply must NOT be switched off. Switching off while saving leads to the loss of the most recently performed and not yet saved device parameterization.

Note

When options are being used (DCC, SMC10, SMC30, TM15, TM31, TM150 etc.) and with certain device configurations, storage can take several minutes.

Copying parameter data sets from the memory card to non-volatile memory

There are two ways of copying parameter data sets from the memory card to non-volatile memory:

- **The electronics power supply is switched off**
  - Insert a memory card containing a parameter data set with the index 0 into the CUD.
  - Switch on the system. The new parameter data is copied to the RAM, and then "RAM to ROM" is automatically executed. The parameter data set with the index 0 which was previously in the ROM will be overwritten.
  - The system will then boot with the new parameter data set.
- **The electronics power supply is switched on**
  - The save operation is initiated via parameter:
    p0802 = 0 ... 100: Source on the memory card
    p0803 = 0/10/11/12: Target in the device memory (ROM)
    p0804 = 1: Start data transfer

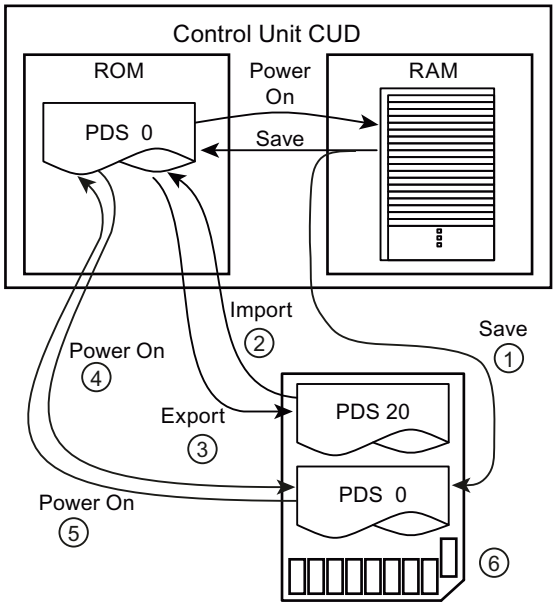

① Memory card available: PDS 0 is copied to the card in parallel
② p0802 = 20; p0803 = 0; p0804 = 1
③ p0802 = 20; p0803 = 0; p0804 = 2
④ For POWER ON, no PDS 0 on the card: PDS 0 is copied from the ROM to the memory card
⑤ At POWER ON, PDS 0 on the card: PDS 0 is copied to the ROM
⑥ Memory card

PDS = parameter data set

Figure 9-5 Copying parameter data sets

Note

The parameter data set in the ROM is overwritten when the system starts. If a memory card with a parameter data set is inserted when the system is switched on, the parameter data set with the index 0 in the ROM will be overwritten by the new one with the index 0 on the memory card.

Using the memory card for series commissioning

The memory card can also be used for series commissioning of several devices with the same parameter assignment.

Procedure:

1. Completely commission a "sample" drive. As soon as all of the parameters have been correctly set, carry out "RAM to ROM".
2. Switch off the system and insert an empty memory card into the CUD. Switch on the system.
3. The parameter assignment is saved on the memory card. If DCC charts are activated in the system, then these as well as the DCC library are also saved on the memory card.
4. Remove the card.
5. Insert the card into a CUD that is switched-off and has still not been parameterized. Switch on the system (POWER ON).
6. When running up, the parameter assignment is transferred into the CUD and copied into the ROM as well as into the RAM. If DCC charts and the DCC library were saved on the memory card, then these are also copied.
7. The card can be removed once the system has run up. The CUD that was still not parameterized now has the same parameter assignment as the original "sample" drive.

Note

The Article number of the device, from which the parameter data set originated, is also saved in a parameter data set. If the parameter data set is loaded to a device with a different article number (POWER ON with the memory card inserted), then the device signals an inconsistent topology (running up stops with display "33" on the BOP, alarm A01420 is output). This occurs, if e.g. a parameter set that was generated from a 30 A device is loaded into a 60 A device. In this state, the user can accept the parameter set by setting p9906 = 3. Ramp-up is continued.

The same procedure also applies if a parameter data set from a standard CUD is loaded into an Advanced CUD - or vice versa. The power-up procedure stops with display "33" on the BOP; the parameter set is accepted using p9906 = 3 and the system continues to run up.

When using an Advanced-CUD, the IP address of the CBE20 is not accepted. This must be subsequently set and assigned, e.g. using Proneta or STARTER "Accessible nodes", context "Edit Ethernet node".

Important parameters

p0977: Save all parameters, for details see the SINAMICS DCM List Manual.
p0802: Data transfer of parameters [0,10,11,12], memory card as source or target
p0803: Data transfer of parameters [0...100], non-volatile device memory as source or target
p0804: Start of parameter data transfer and specification of transfer direction:
p0804 = 1: Transfer from the memory card to non-volatile device memory
p0804 = 2: Transfer from non-volatile device memory to memory card

9.1.5 BICO technology: Interconnecting signals

Every drive contains a large number of interconnectable input and output variables and internal control variables.

The drive unit can be adapted to a wide range of requirements using BICO technology (Binector Connector Technology).

Digital and analog signals, which can be interconnected as required by means of BICO parameters, are identified by the prefix BI, BO, CI, or CO in their parameter name.

These parameters are identified accordingly in the parameter list or in the function diagrams.

Note

The STARTER commissioning tool is recommended when using BICO technology.

9.1.5.1 Binectors, connectors

Binectors, BI: Binector input, BO: Binector output

A binector is a digital (binary) signal without a unit which can assume the value 0 or 1.

Binectors are subdivided into binector inputs (signal sink) and binector outputs (signal source).

Table 9-3 Binectors

Abbreviation	Symbol	Name	Description
BI	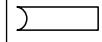	Binector input (signal sink)	Can be interconnected to a binector output as source. The number of the binector output must be entered as a parameter value.
BO		Binector output (signal source)	Can be used as a source for a binector input.

Connectors, CI: Connector input, CO: Connector output

A connector is a digital signal, e.g. in 32-bit format. It can be used to emulate words (16 bits), double words (32 bits) or analog signals. Connectors are subdivided into connector inputs (signal sink) and connector outputs (signal source).

Table 9-4 Connectors

Abbreviation	Symbol	Name	Description
CI		Connector input (signal sink)	Can be interconnected to a connector output as source. The number of the connector output must be entered as a parameter value.
CO		Connector output (signal source)	Can be used as a source for a connector input.

9.1.5.2 Interconnecting signals using BICO technology

To interconnect two signals, a BICO input parameter (signal sink) must be assigned to the desired BICO output parameter (signal source).

The following information is required to connect a binector/connector input to a binector/connector output:

- Binectors: Parameter number, bit number, and drive object ID
- Connectors with no index: Parameter number and drive object ID
- Connectors with index: Parameter number, index, and drive object ID
- Data type (signal source for connector output parameter)

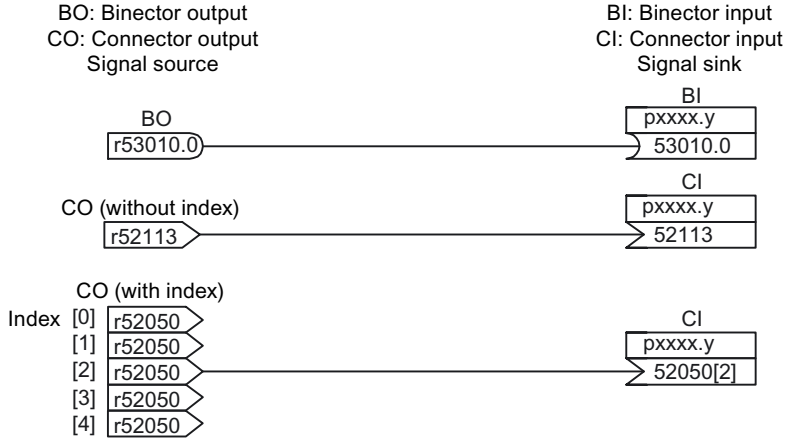

Figure 9-6 Interconnecting signals using BICO technology

Note

A connector input (CI) cannot be just interconnected with any connector output (CO, signal source). The same applies for binector input (BI) and binector output (BO).
For each CI and BI parameter, the parameter list shows under "data type" the information on the data type of the parameter and the data type of the BICO parameter.
For CO parameters and BO parameters, only the data type of the BICO parameter is shown.
Notation:
Data types BICO input: Data type parameter/Data type BICO parameter
Example: Unsigned32 / Integer16
Data types BICO output: Data type BICO parameter
Example: FloatingPoint32

The possible interconnections between the BICO input (signal sink) and BICO output (signal source) are listed in the table titled "Possible combinations for BICO interconnections", which can be found in the "Explanations on the parameter list" section of the SINAMICS DCM List Manual.

The BICO parameter interconnection can be implemented in different command data sets (CDS). The different interconnections in the command data sets are activated by switching data sets. Interconnections across drive objects are also possible.

9.1.5.3 Internal encoding of the binector/connector output parameters

Internal encoding is required for writing BICO input parameters via PROFIBUS, for example.

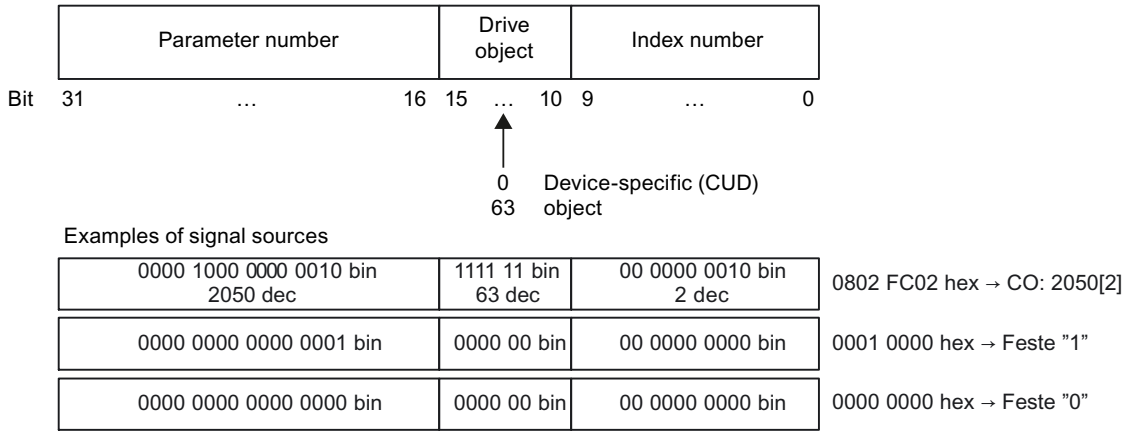

Figure 9-7 Internal encoding of the binector/connector output parameters

9.1.5.4 Example: Interconnecting digital signals

A drive should be operated via terminals DI 0 and DI 3 on the CUD using jog 1 and jog 2.

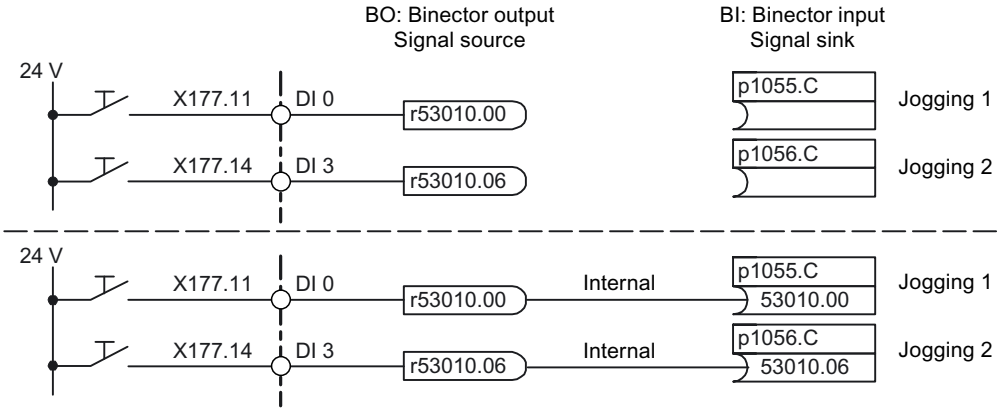

Figure 9-8 Interconnecting digital signals (example)

9.1.5.5 Notes on BICO technology

Binector-connector converters and connector-binector converters

Binector-connector converter

- Several digital signals are converted to a 32-bit integer double word or to a 16-bit integer word.
- p2080[0...15] BI: PROFIdrive PZD send bit-serial

Connector-binector converter

- A 32-bit integer double word or a 16-bit integer word is converted to individual digital signals.
- p2099[0...1] CI: PROFIdrive PZD selection receive bit-by-bit

Fixed values for interconnection using BICO technology

The following connector outputs are available for interconnecting any fixed value settings:

- p2900[0...n] CO: Fixed value_%_1
- p2901[0...n] CO: Fixed value_%_2
- p2930[0...n] CO: Fixed value_M_1

Example:

These parameters can be used to interconnect the scaling factor for the main setpoint or to interconnect an additional torque.

9.2 Parameterizing using the BOP20 (Basic Operator Panel 20)

9.2.1 General information on BOP20

The BOP20 can be used to power drives up and down during the commissioning phase as well as display and modify parameters. Faults can be diagnosed as well as acknowledged.

Overview of displays and keys

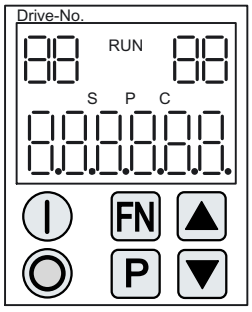

Figure 9-9 Overview of displays and keys

Information on the displays

Table 9-5 Displays

Display	Meaning
Top left 2 digits	The active drive object of the BOP is displayed here. The displays and key operations always refer to this drive object.
RUN	Is displayed, if at least one drive in the drive line-up is in the RUN state (in operation). RUN is also displayed via bit r0899.2 of the drive.
Top right 2 digits	The following is displayed in this field: • More than 6 digits: Characters that are still present but invisible (e.g. "r2" –––> 2 characters to the right are invisible, "L1" –––> 1 character to the left is invisible) • Faults: Selects/displays other drives with faults • Marking of BICO inputs (bi, ci) • Marking of BICO outputs (bo, co) • Source object of a BICO interconnection with a drive object different than the active one
S	Is displayed if at least one parameter was changed and the value has not yet been transferred to the non-volatile memory.
P	Is displayed if, for a parameter, the value only takes effect after the P key is pressed.
C	Is displayed if at least one parameter was changed and the calculation for consistent data management has still not been initiated.
Bottom 6 digits	Displays. parameters, indices, faults, and alarms, for example
The currently displayed characters flash at 1 Hz	Saving "RAM to ROM" is active (e.g. initiated by p0977 = 1 or by pressing the P key for a longer period of time (3 s))

Note

During a data save operation initiated by the user, the electronic power supply for the SINAMICS DCM must not be interrupted.

An active saving process is indicated by the following actions:

- The RDY LED flashes (see the "Description of functions" chapter, "Description of the LEDs on the CUD" section)
- The BOP20 flashes

Interrupting the electronic power supply while saving can lead to the loss of the actual device parameter assignment. Also refer to Chapter "Operation", Section "Memory card functions".

For certain user actions (e.g. restore factory setting) a two-digit number is displayed on the BOP20. This number provides information about the drive state. The significance of these numbers is provided in Appendix B.

Information on the keys

Table 9-6 Keys

Key	Name	Meaning
	ON	Power up the drives for which the "ON/OFF1" command should come from the BOP. Binector output r0019.0 is set using this key.
	OFF	Switch off the drives for which the "ON/OFF1", "OFF2", or "OFF3" commands should come from the BOP. Binector outputs r0019.0, .1 and .2 are simultaneously reset when this key is pressed. After the key has been released, binector outputs r0019.1 and .2 are again set to a "1" signal. **Note**: Whether these keys are active can be defined by assigning appropriate BICO parameters (e.g. it is possible to use these keys to control all of the existing drives at the same time).
	Functions	The meaning of these keys depends on the current display. **Note**: The effectiveness of this key to acknowledge faults can be defined via BICO parameterization.
	Parameter	The meaning of these keys depends on the current display. If this key is pressed for 3 s, the "Copy RAM to ROM" function is executed. The "S" displayed on the BOP disappears.
	Increase	The keys depend on the current display and are used to either increase or decrease values.
	Decrease	

BOP20 functions

Table 9-7 Functions

Name	Description
Backlighting	The backlighting can be set using p0007 in such a way that it switches itself off automatically after the set time if no actions are carried out.
Switch active drive	From the BOP perspective, the active drive is defined using p0008 or using the keys "FN" and "Arrow up".
Units	The units are not displayed on the BOP.
Access level	The access level for the BOP is defined using p0003. The higher the access level, the more parameters can be selected using the BOP.
Parameter filter	Using the parameter filter in p0004, the available parameters can be filtered according to their particular function.
Select status display	Actual values and setpoints are displayed on the status display. The status display can be set via p0006.
User parameter list	Parameters can be selected for access using the user parameter list in p0013.
Hot swapping	The BOP can be unplugged and plugged while energized. • The ON and OFF keys have a function. When unplugging, the drives are stopped. After plugging, the drives must be switched on again. • The ON and OFF keys have no function Unplugging and plugging has no effect on the drives.
Key operation	The following applies to the "P" and "FN" keys: • When used in a combination with another key, "P" or "FN" must be pressed before the other key.

Overview of important parameters (refer to the SINAMICS DCM List Manual)

All drive objects

- p0005 BOP status display selection
- p0006 BOP status display mode
- p0013 BOP user-defined list
- p0971 Drive object, save parameters

Drive object, Control Unit (CU_DC)

- r0002 Control Unit status display
- p0003 BOP access level
- p0004 BOP display filter
- p0007 BOP backlighting
- p0008 BOP drive object selection
- p0009 Device commissioning, parameter filter
- p0011 BOP password input (p0013)
- p0012 BOP password confirmation (p0013)

- r0019 CO/BO: Control word, BOP
- p0977 Save all parameters

Drive object (DC_CTRL)

- p0010 Commissioning, parameter filter

9.2.2 Displays and operation with the BOP20

Features

- Status display
- Changing the active drive object
- Displaying/changing parameters
- Displaying/acknowledging faults and alarms
- Controlling the drive using the BOP20

Operating display

The operating display for each drive object can be set using p0005 and p0006. Using the operating display, you can change into the parameter display or to another drive object. The following functions are possible:

- Changing the active drive object
  - Press the "FN" and "Arrow up" keys -> the drive object number at the top left flashes
  - Select the required drive object using the arrow keys
  - Confirm with the "P" key
- Parameter display
  - Press the "P" key
  - The required parameter can be selected using the arrow keys
  - Press the "FN" key -> "r00000" is displayed
  - Press the "P" key -> returns to the status display

Parameter display

The parameters are selected in the BOP20 b their number. The parameter display is reached from the operating display by pressing the "P" key. Parameters can be searched for using the arrow keys. The parameter value is displayed by pressing the "P" key again. You can toggle between the drive objects by simultaneously pressing the "FN" key and an arrow key. You can toggle between "r00000" and the parameter that was last displayed by pressing the "FN" key in the parameter display.

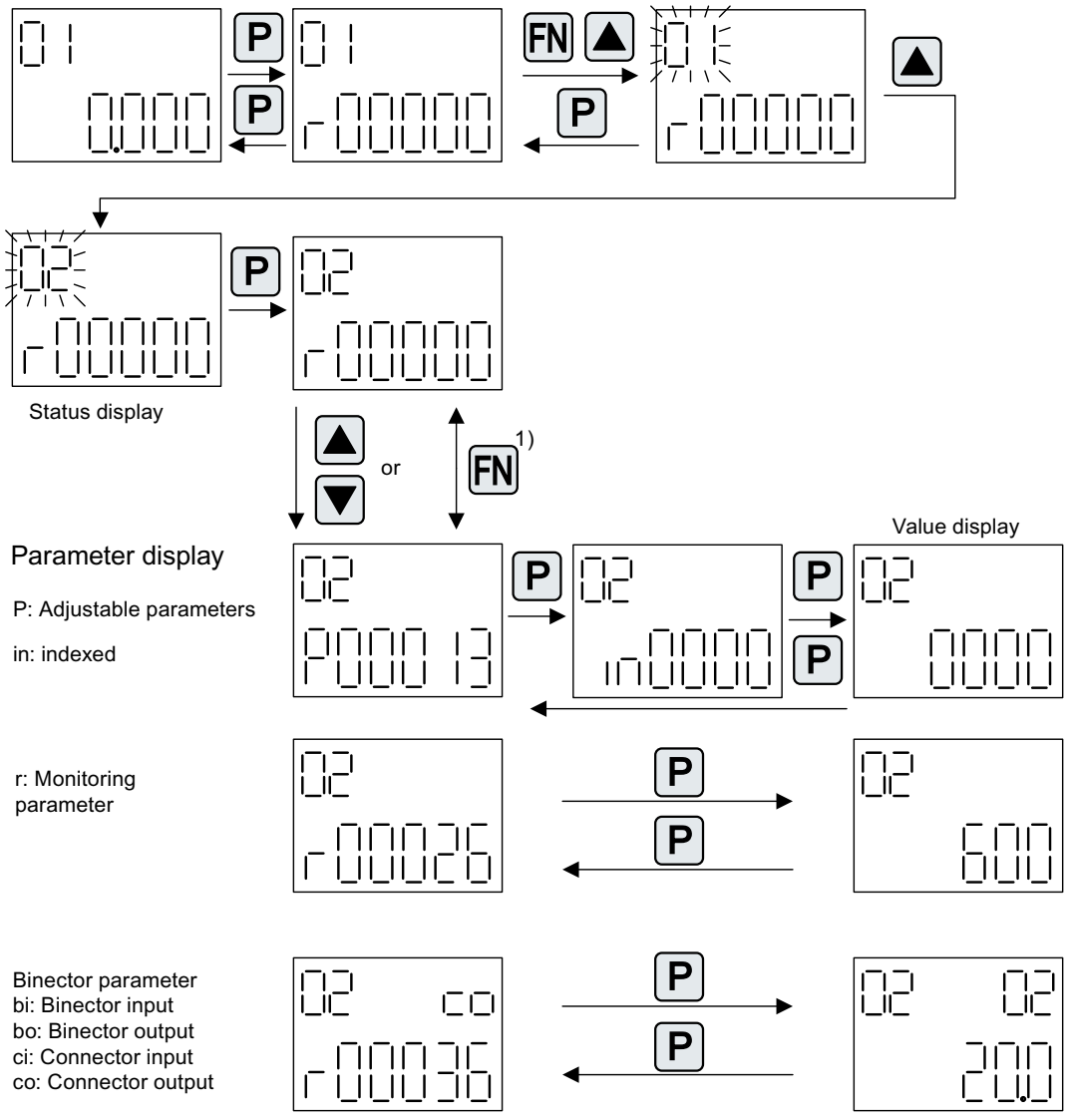

1) You can switch between "r00000" and the parameter that was last displayed by pressing the FN key in the parameter display.

Figure 9-10 Parameter display

Value display

To switch from the parameter display to the value display, press the "P" key. In the value display, the values of the adjustable parameters can be increased and decreased using the arrow. The cursor can be selected using the "FN" key.

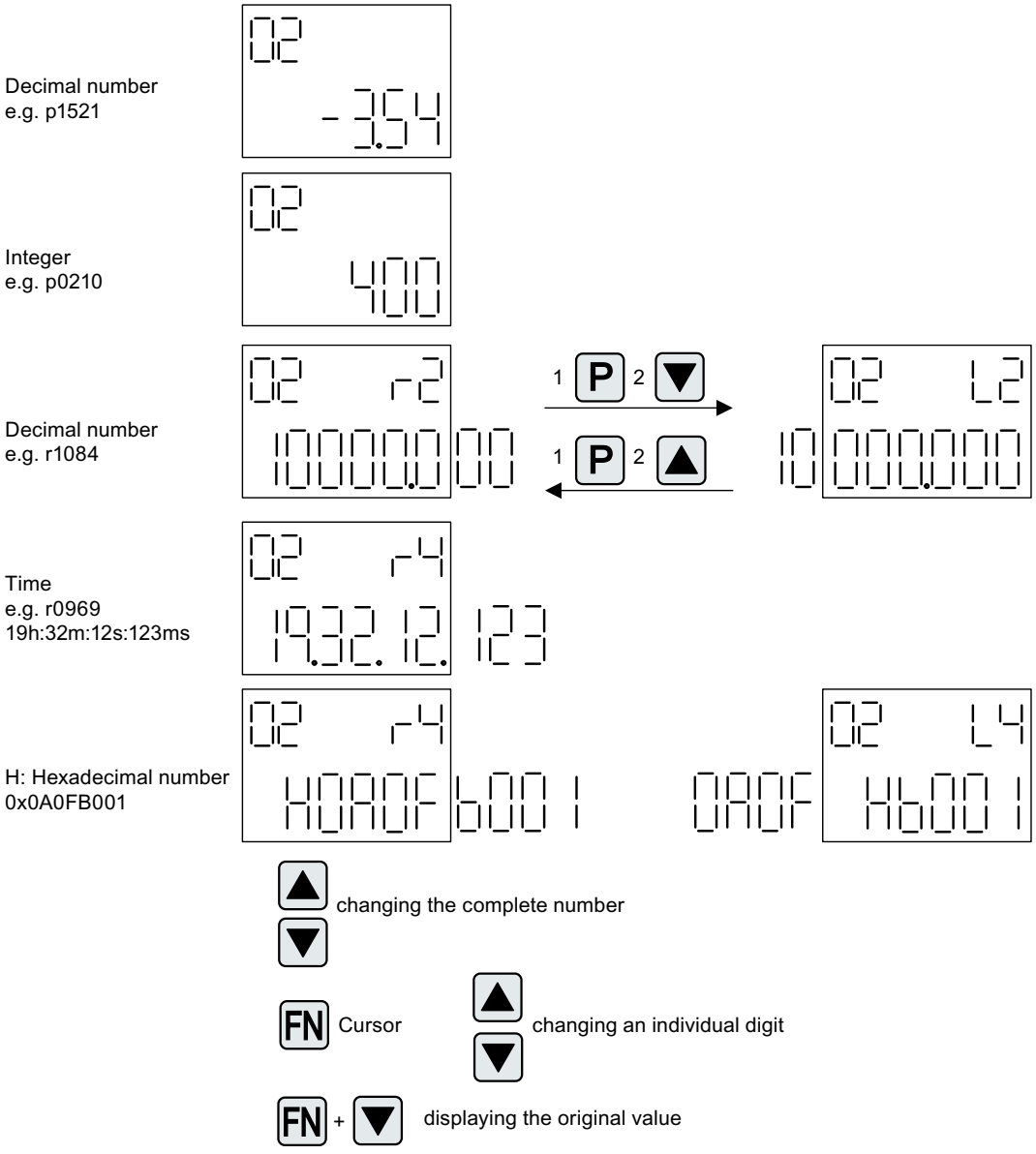

Figure 9-11 Value display

Example: Changing a parameter

Requirement: The appropriate access level is set
(for this particular example, p0003 = 3).

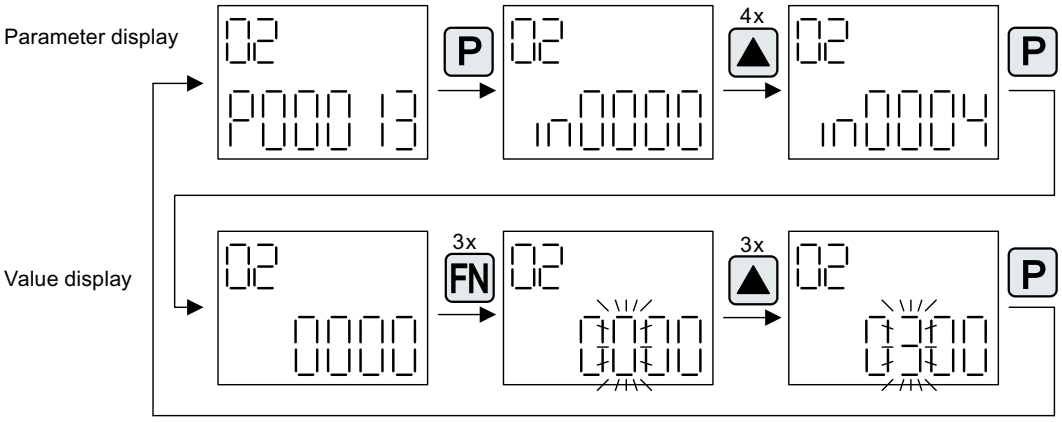

Figure 9-12 Example: Changing p0013[4] from 0 to 300

Example: Changing binector and connector input parameters

For the binector input p0840[0] (OFF1) of drive object 2 binector output r0019.0 of the Control Unit (drive object 1) is interconnected.

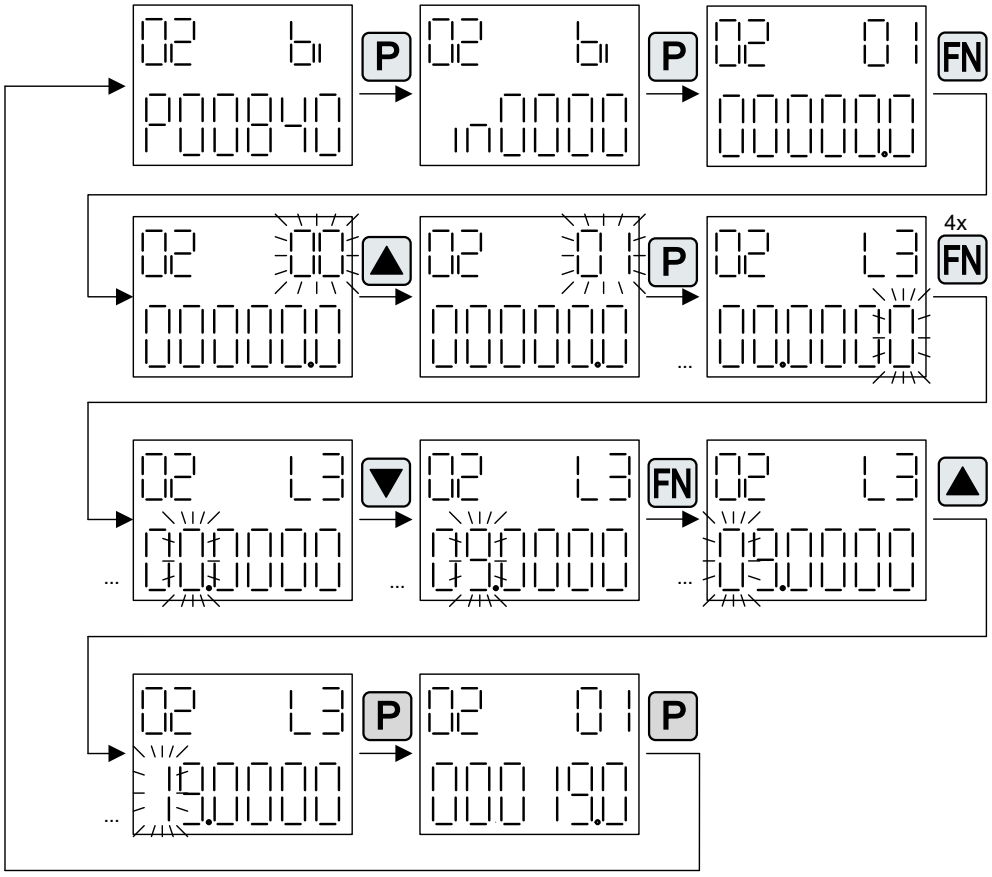

Figure 9-13 Example: Changing indexed binector parameters

9.2.3 Displaying faults and alarms

Displaying faults

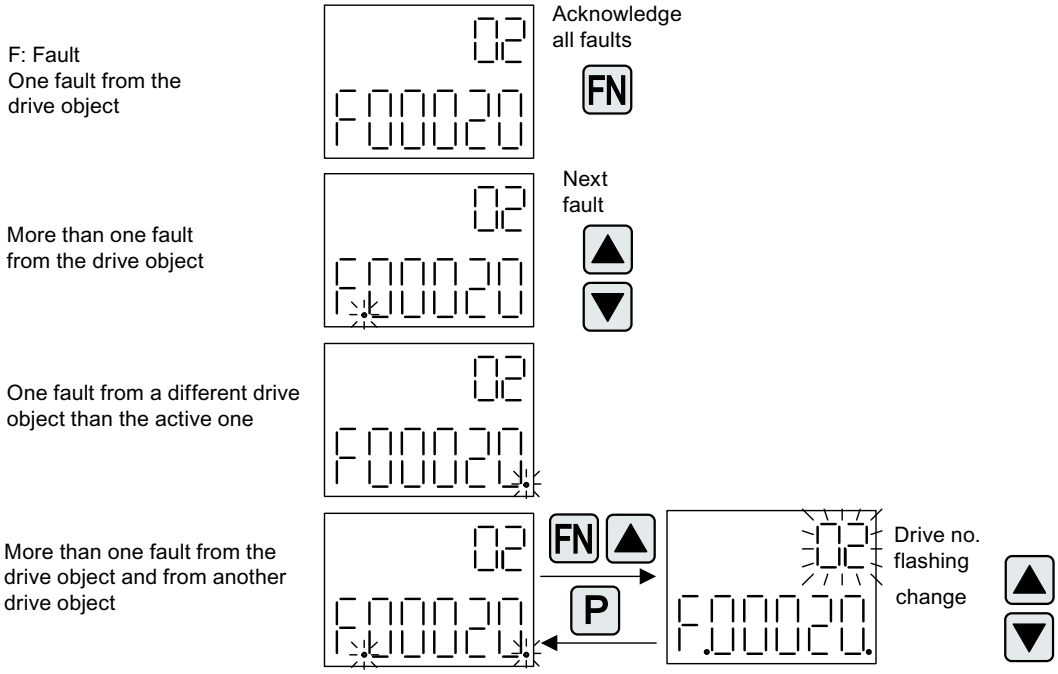

Figure 9-14 Faults

Displaying alarms

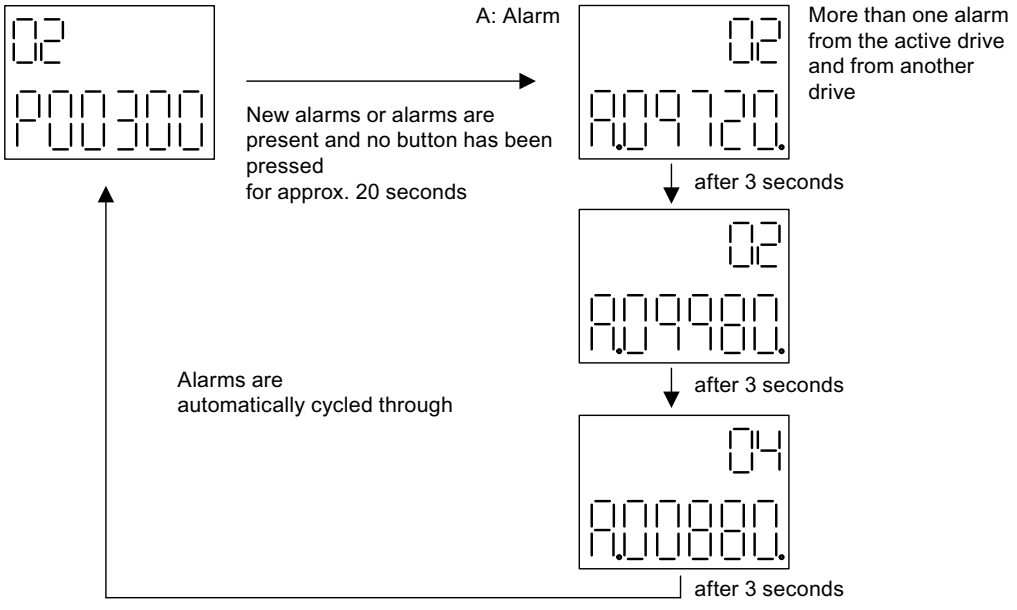

Figure 9-15 Alarms

9.2.4 Controlling the drive using the BOP20

When commissioning the drive, it can be controlled via the BOP20. A control word is available on the Control Unit drive object (r0019) for this purpose, which can be interconnected with the appropriate binector inputs of e.g. the drive.

The interconnections do not function if a standard PROFIdrive telegram was selected as its interconnection cannot be disconnected.

Table 9-8 BOP20 control word

Bit (r0019)	Name	Example, interconnection parameters
0	ON / OFF (OFF1)	p0840
1	No coast down/coast down (OFF2)	p0844
2	No fast stop/fast stop (OFF3)	p0848
7	Acknowledge fault (0 → 1)	p2102
13	Motorized potentiometer, raise	p1035
14	Motorized potentiometer, lower	p1036

Note

For simple commissioning, only bit 0 should be interconnected. When interconnecting bits 0 ... 2, the system is switched off according to the following priority: OFF2, OFF3, OFF1.

9.3 Controlling via the AOP30 operator panel

⚠ WARNING

No Emergency Stop, Emergency Off or STO function

The OFF button on the AOP30 operator panel does not comply with the requirements relating to Emergency Stop, Emergency Off or STO function (functional safety)!

- Only use the OFF button of the AOP30 for switching on or switching off in operation.

Note

To operate the AOP30, p2030 = 3 must be set.

An operator panel is located in the cabinet door of the cabinet unit for operating, monitoring, and commissioning tasks. It has the following features:

- Graphical, backlit LCD for plain-text display and a "bar display" of process variables
- LEDs for displaying the operating states
- Help function describing the causes of and remedies for faults and alarms
- Keypad for controlling a drive under normal operating conditions

- LOCAL/REMOTE switchover for selecting the control terminal (master control assigned to operator panel or customer terminal block/PROFIBUS)
- Numeric keypad for entering setpoints or parameter values
- Function keys for prompted navigation through the menus
- Two-stage safety concept to protect against accidental or unauthorized changes to settings
- IP54 degree of protection (when installed)

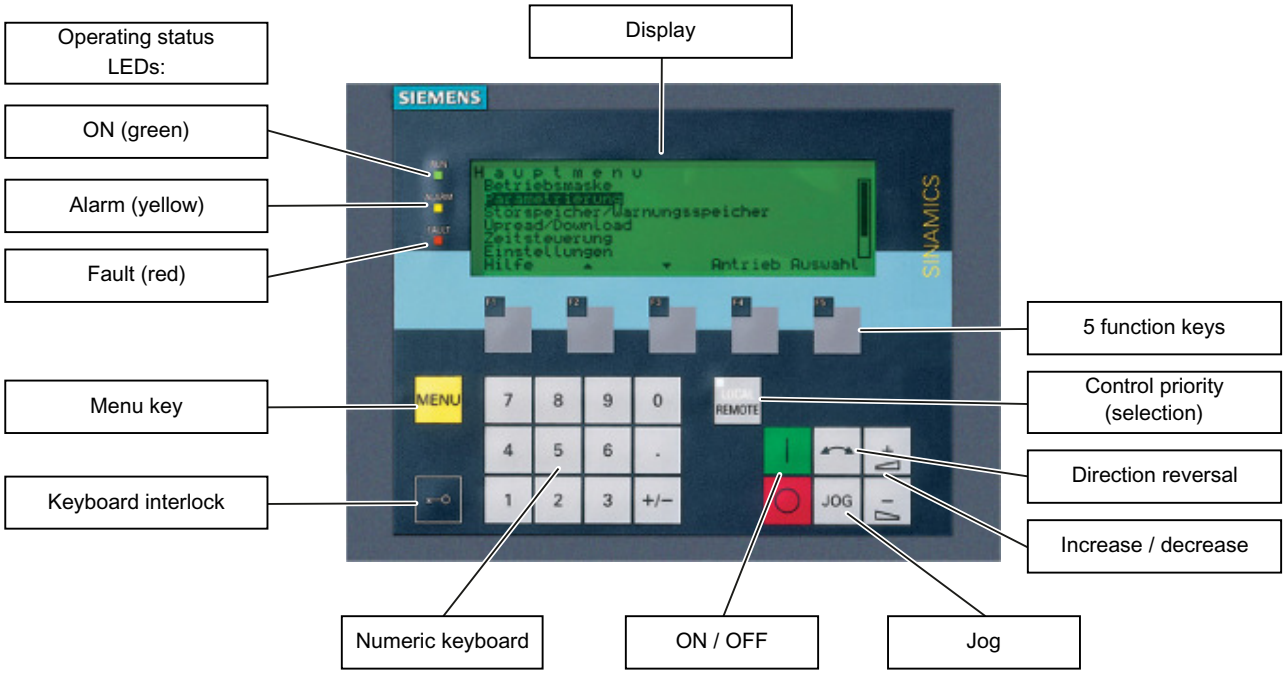

Figure 9-16 Components of the cabinet unit operator panel (AOP30)

9.3.1 Overview and menu structure

Description

The operator panel can be used for:

- Assigning parameters (commissioning)
- Monitoring status variables
- Controlling the drive
- Diagnosing faults and alarms

All the functions can be accessed via a menu.

Your starting point is the main menu, which you can always call up using the yellow MENU key:

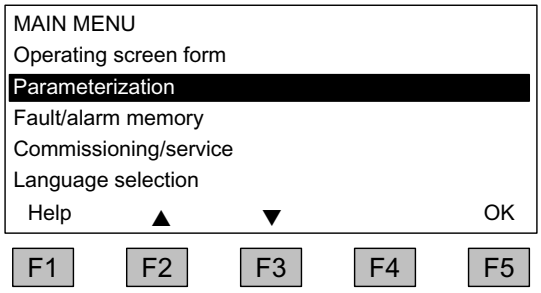

Dialog screen for the main menu:
This can be accessed with the "MENU" key.

Press "F2" or "F3" to navigate through the menu options in the main menu.

Menu structure of the operator panel

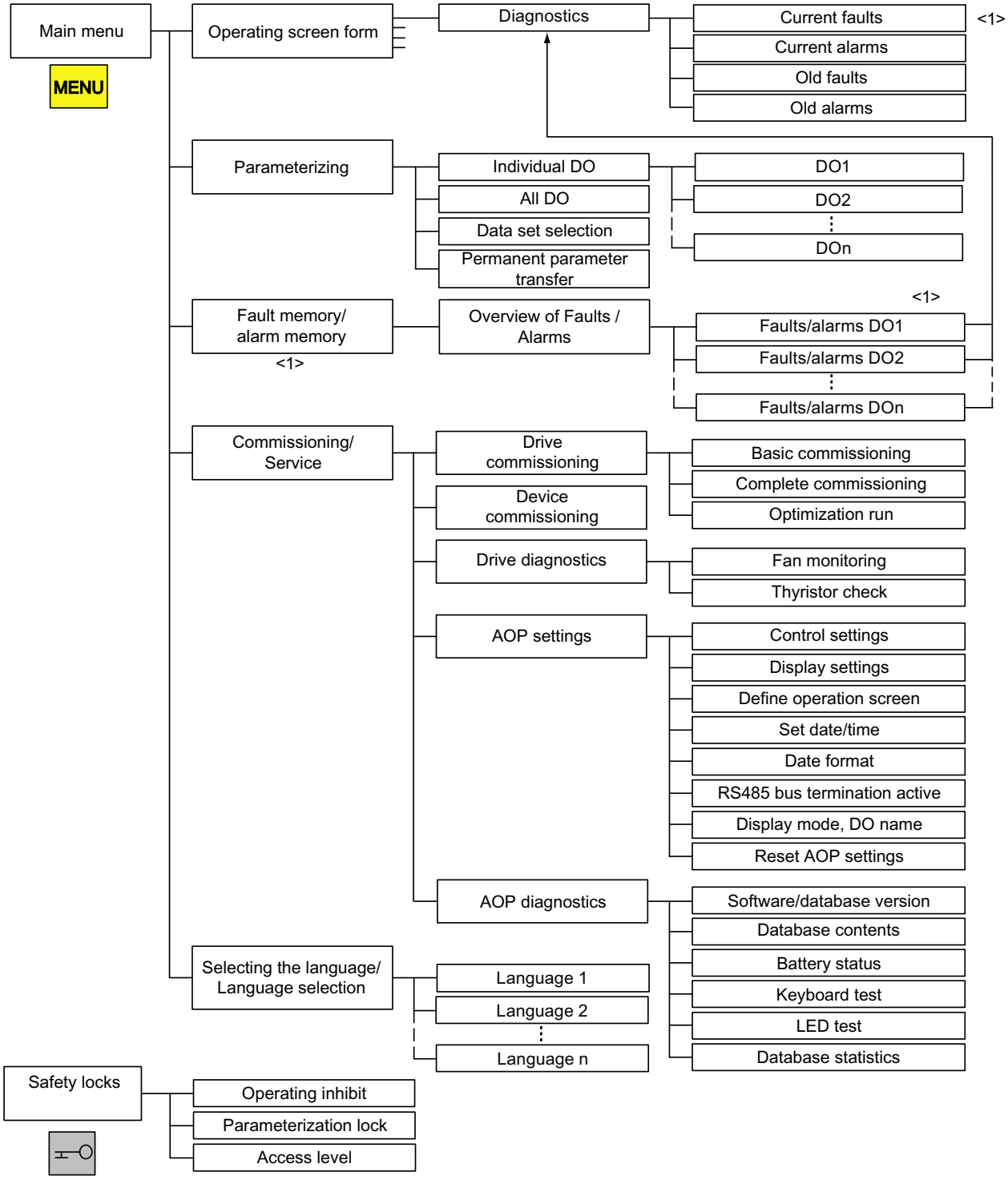

<1> Help texts can be called for all alarms and faults

Figure 9-17 Menu structure of the AOP30 operator panel

9.3.2 Operation screen menu

Description

The operation screen displays the most important status variables for the drive unit:

In the factory setting, it displays the operating state of the drive, the direction of rotation, the time, as well as four drive variables (parameters) in numerical format and two values in the form of a bar display for continuous monitoring.

You can call up the operation screen in one of three ways:

1. Automatically after ramping-up is complete
2. From the main menu, by selecting the "Operation screen" menu command and F5 ("OK")
3. From the "Fault/alarm overview" screen, by selecting F4 ("Tools+"/"Back") and F5 ("OK") if the jump is from the operation screen into this screen

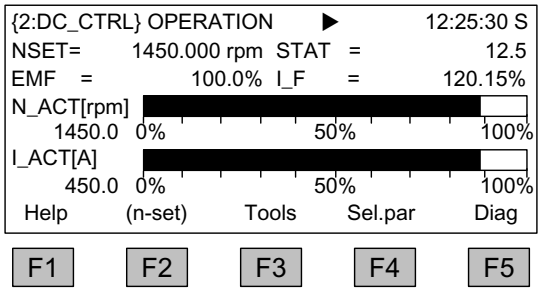

Figure 9-18 Operation screen

If a fault was registered during ramping-up, the system automatically branches from the operation screen into which the jump was made following the ramping-up process into the fault screen. This also happens if the system is on the operation screen and the first fault is registered here.

You can use F2 in the LOCAL state to enter the setpoint via the numeric keypad, if the drive is in the OPERATION state or the system setting "Save AOP setpoint" is set to YES.

You can switch to an alternative operation screen with F3 "Tools." It is used to display technological variables and can be defined or changed at “Menu” - “Commissioning / service” - “AOP settings” - “Define operation screen”.

The individual parameters of the operation screen can be selected using F4 ("Sel. par"). F1 ("Help+") can be used to display the corresponding parameter number of the short identifier and call up a description of the parameter.

Setting options

When you choose Commissioning / service – AOP settings – Define operation screen, you can adjust the display type and the values displayed as required (see "AOP settings (Page 356) “ Chapter).

9.3.3 Parameterization menu

You can adjust the unit settings in the Parameterization menu.

Two display types can be selected in the AOP:

1. All parameters
   All the parameters present in the unit are listed with this option. The DO to which the parameter currently selected belongs (inverted) is displayed in curly brackets in the top left of the screen. With this display type, the response time for turning a page is dependent on the number of DOs and is generally longer than with parameter lists that only display one DO.
2. DO selection
   With this display type, you can pre-select a DO so that only the parameters for this DO are listed. (The expert list in STARTER is only displayed in this DO view.)

In both cases, the set access level governs which parameters are displayed. You can set the access level in the menu for safety inhibits, which can be called up using the key button.

The parameters for access levels 1 and 2 are sufficient for simple applications.

At access level 3 ("Expert"), you can change the structure of the function by interconnecting BICO parameters.

The Parameterization menu offers four options:

- **Individual DO**
  Shows the parameters of a DO to be selected in advance
- **All DOs**
  Shows the parameters of all DOs in list format (as described previously)

- **Data set selection**

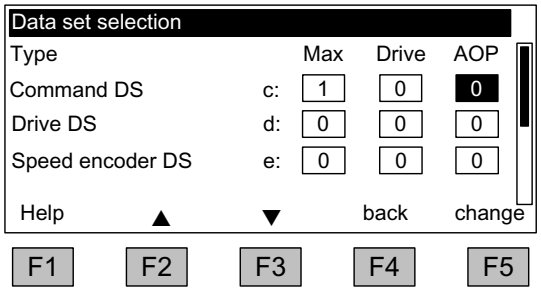

Figure 9-19 Data set selection

In the "AOP" column of the "Data set selection" screen, you can choose which of the data sets selected is currently displayed on the operator panel. The data set numbers that are set in the drive (i.e. are currently active) are displayed in the "Drive" column. The "Max" column shows the maximum data set number to be entered for the AOP30 display.
In parameter lists, data set parameters are indicated by the letter c, d, or e between the parameter number and parameter designator. The number at the right of the first row from the top shows which data set a highlighted parameter comes from.
In the commissioning wizard, the drive is commissioned using the data set selected on this screen in the AOP column.
The data set selection dialog appears whenever a data set parameter is changed in the parameter list. The data set selected in the data set selection screen is a default setting.

- **Permanent parameter transfer**
  Parameter changes in the SINAMICS DCM are only made temporarily in the RAM. If a parameter assignment is intended to be permanent, it is possible to trigger a save process at this point. Depending on the configuration, this can take from 45 s to several minutes.
  See also Chapter "Memory card functions (Page 329)".

9.3.4 Fault/alarm memory menu

When you select this menu, a screen appears containing an overview of faults and alarms that are present.

For each drive object, the system indicates whether any faults or alarms are present. ("Fault" or "Alarm" appears next to the relevant drive object).

In the graphic below, you can see that at least one active fault/alarm is present for the "DC_CTRL" drive object. No faults or alarms are indicated for the other drive two objects.

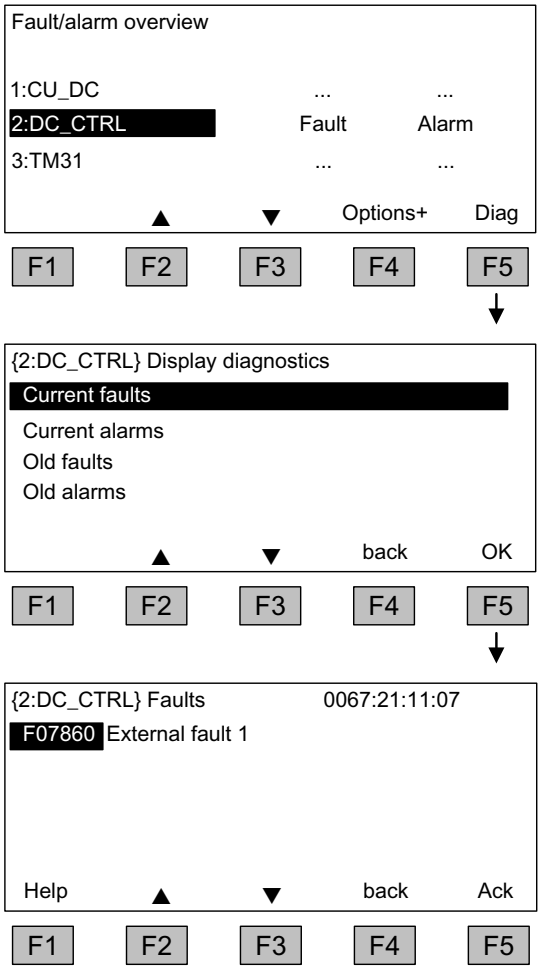

Overview of Faults / Alarms

When you navigate to the line with active alarms/faults and then press the F5 <Diag> key, the system displays a screen in which you may select the current or old alarms/faults.

Display diagnostics

When you navigate to the required line and then press the F5 <OK> key, the corresponding faults/alarms are displayed. The list of current faults is selected here as an example.

Current faults display

A maximum of eight current faults are displayed along with their fault number and a description of the fault.

To display additional help regarding the cause of the problem and how to solve it, choose F1 <Help>.

To acknowledge the faults, choose F5 <Ack>. If a fault cannot be acknowledged, the fault remains.

9.3.5 Commissioning/service menu

9.3.5.1 Drive commissioning

Selecting this option enables you to re-commission the drive from the main menu, using the AOP wizard.

Basic commissioning

A few key parameters (such as the maximum speed, ramp-up time, and ramp-down time) are requested. The changes can then be permanently saved in the final confirmation screen.

Complete commissioning

Complete commissioning, with entry of the motor and encoder data, is carried out. Following this, key motor parameters are recalculated on the basis of the motor data. The parameter values calculated during the previous commissioning process are lost. The calculated values are then overwritten during a subsequent optimization run.

Optimization run

The selection screen for the optimization runs appears.

9.3.5.2 Device commissioning

In this menu, you can enter the device commissioning status directly. This is the only way to reset parameters to the factory setting, for example.

9.3.5.3 AOP settings

Control settings

This defines the settings for the control keys in LOCAL mode (see the section titled "Operation/ Operation via the operator panel") as well as additional settings that are relevant for drive control.

Display settings

In this menu, you set the lighting, brightness, and contrast for the display.

Define operation screen

In this menu, you can switch between five operation screens. You can set the parameters to be displayed.

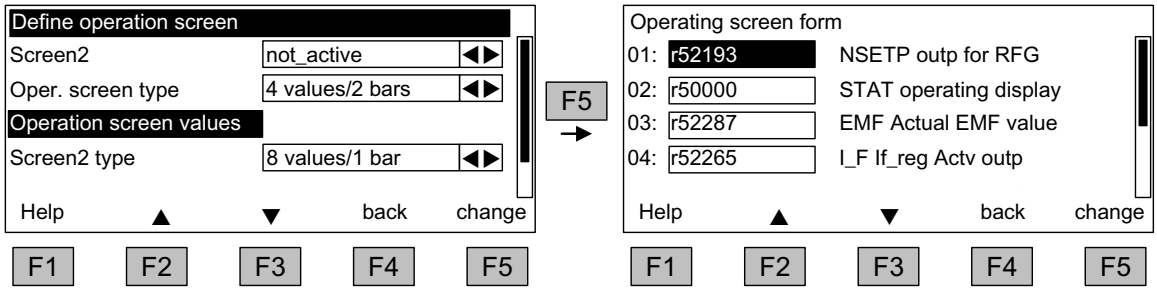

Figure 9-20 Define operation screen

The following screenshot shows how entries are assigned to the screen positions:

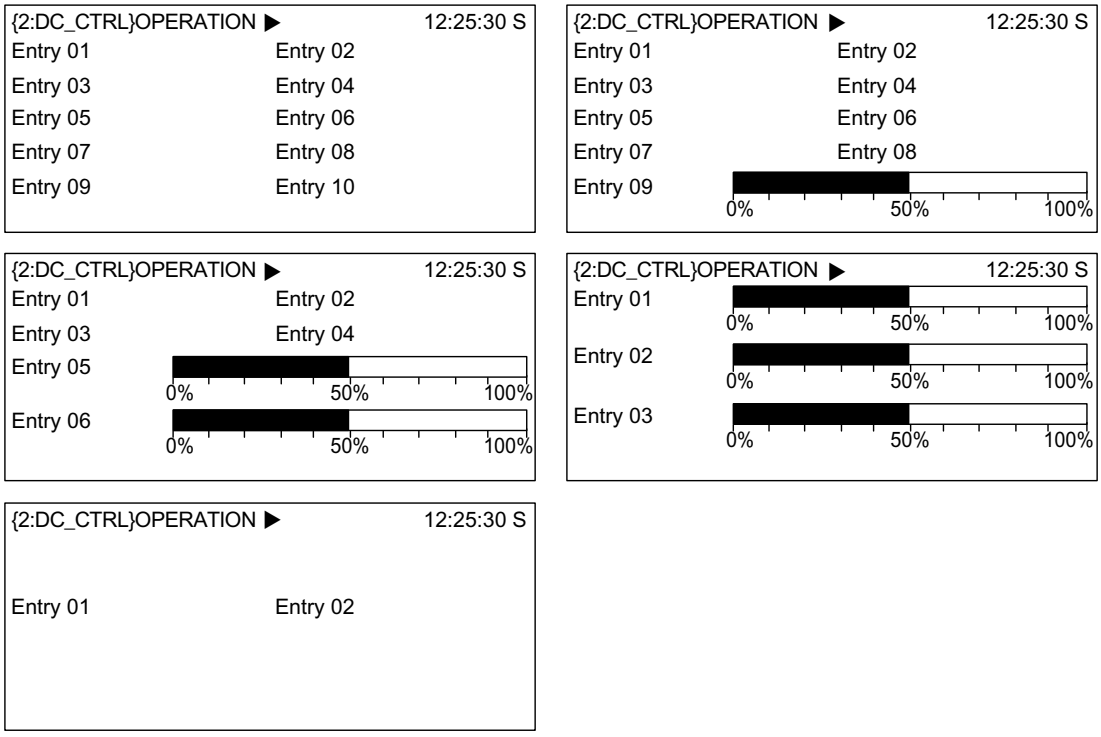

Figure 9-21 Positions of entries on the operation screen

Lists of signals for the operating screen form

The following tables list some important signals for the operation screen form along with their associated reference variables and default settings for quick commissioning.

DC_CTRL object

Table 9-9 List of signals for the operating screen form - object DC_CTRL

Signal		Parameter	Short name	Unit	Scaling (100%=...) see table below
Factory setting (entry no.)					
N setpoint after limiting	(1)	r50029	NSET	rpm	p2000
Operating display	(2)	r50000	STAT	-	-
EMF actual value	(3)	r52287	EMF	%	-
Field current actual value	(4)	r52265	I_F	%	-
Actual speed value	(5)	r00021	N_ACT	rpm	p2000
Armature current actual value	(6)	r00027	I_ACT	A	p2002
Armature firing angle	(7)	r50018	ALF_A	°	-
Field firing angle	(8)	r50034	ALF_F	°	-
Motor temperature rise	(9)	r50014.0	TEMP	%	-
Thyristor temperature rise	(10)	r50014.1	TEMP1	%	-
for diagnostic purposes					
Speed setpoint smoothed		r0020	NSET	rpm	p2000

Signal	Parameter	Short name	Unit	Scaling (100%=...) see table below
Speed actual value motor encoder	r0061	N_ACT	rpm	p2000
Speed actual value after smoothing	r0063	N_ACT	rpm	p2000
for advanced diagnostics				
Setpoint from PROFIBUS	r2050	PBSET	rpm	p2000

Scalings for object DC_CTRL

Table 9-10 Scalings for object DC_CTRL

Variable	Scaling parameter	Default for quick commissioning
Reference speed	100 % = p2000	p2000
Reference voltage	100 % = p2001	p2001 = 1000 V
Reference current	100 % = p2002	p2002 = Current limit (p0640)
Reference torque	100 % = p2003	p2003 = 2 × rated motor torque
Reference power	100 % = r2004	r2004 = (p2003 × p2000 × π) / 30
Reference temperature	100 % = 100 °C	-

TM31 object

Table 9-11 List of signals for the operation screen - TM31 object

Signal	Parameter	Short name	Unit	Scaling (100% = ...)
Analog input 0 [V, mA]	r4052[0]	AI_UI	V, mA	R: 100 V / mA: 100 mA
Analog input 1 [V, mA]	r4052[1]	AI_UI	V, mA	R: 100 V / mA: 100 mA
Analog input 0, scaled	r4055[0]	AI_%	%	R: 100 V / mA: 100 mA
Analog input 1, scaled	r4055[1]	AI_%	%	R: 100 V / mA: 100 mA

Setting date/time

Settings: MENU – Commissioning / Service – AOP settings

For stamping faults and alarm messages with date, and for AOP time display on the operation screen form

The AOP30 includes a battery-buffered realtime clock.

You set the date and time in this screen form.

Synchronization

You can also set whether and/or how the AOP30 and drive unit are to be synchronized. Synchronizing the AOP → Drive enables fault and alarm messages to be stamped with date and time. (in the default setting, the time stamp is with the CU runtime).

- None (factory setting)
  The AOP30 and drive unit times are not synchronized.
- AOP → drive
  - If you activate this option, the AOP and drive unit are synchronized immediately, whereby the current AOP time is transferred to the drive unit.
  - The current AOP30 time is transferred to the drive unit every time the AOP30 is started.
  - At 02:00 (AOP time) every day, the current AOP30 time is transferred to the drive unit.
  - The drive unit has the internal time again after it restarts (POWER ON).
- Drive → AOP
  - If a time-of-day master is connected to the drive, then activating this option enables the AOP and drive unit to be synchronized immediately, whereby the current drive unit time is transferred to the AOP30.
  - The current drive unit time is transferred to the AOP30 every time the AOP30 is restarted.
  - At 02:00 (AOP time) every day, the current drive unit time is transferred to the AOP30.

Date format

The date format can be set in this menu:

- DD.MM.YYYY: European date format
- MM/DD/YYYY: North American date format

RS485 bus termination active

Settings are not effective. The RS485 bus termination is continuously active.

DO name display mode

A user-definable DO name can be activated/deactivated in the screen form.

In the drive, there is the option of entering a user-defined, 25-character DO name for each DO, using the configuration software.

Depending on the screen form, the possible number of characters of the DO name display is limited:

1. DO name in screen forms where the actual DO is displayed
   Examples of screen forms in this category are: Operation screen form, parameter lists, quick commissioning wizard screens, etc.
   The maximum text length is 7 characters. Example {2:DC_CTRL}
   Texts up to 7 characters long are displayed in full. The first six characters of texts that are 8 to 25 characters long are displayed with "..." as the 7th character.
2. DO names in the overview of faults and alarms (alarm overview)
   The maximum text length is 12 characters. Example 2:HOIST 1234
   For texts up to 12 characters long are displayed in full.
   The first 11 characters of texts that are 13 to 25 characters in length are displayed with "..." as the 12th character.

Texts that have been shortened can be displayed in full for around 3 seconds by pressing the "+/-" button, provided that the "User-definable DO name" function is activated.

Reset AOP settings

When you choose this menu option, the AOP factory settings for the following are restored:

- Language
- Display (brightness, contrast)
- Operation screen
- Control settings

Note

When you reset parameters, all settings that are different to the factory settings are reset immediately. Under certain circumstances, this may result in an unwanted operating state. This is the reason that you should always take great care when resetting parameters.

9.3.5.4 AOP30 diagnostics

Software/database version

This menu command shows the versions of the software and database.

The database version must be compatible with the drive software version (refer to parameter r0018).

Database contents

Shows detailed information on the drive objects (DOs) present in the system

Battery status

This menu displays the battery voltage (in volts and as a bar chart). The battery ensures that the data in the database and the current time are retained.

When the battery voltage is represented as a percentage, a battery voltage of ≤ 2 V is equal to 0%, and a voltage of ≥ 3 V to 100%.

The data is secure up to a battery voltage of 2 V.

- If the battery voltage is ≤ 2.45 V, the message "Replace battery" is displayed in the status bar.
- If the battery voltage is ≤ 2.30 V, the system displays the following message: "Alarm, weak battery".
- If the battery voltage is ≤ 2 V, the system displays the following message: "Caution: The battery is dead".
- If the time and/or database is/are unavailable due to an undervoltage condition after being in a switched off state for a longer period of time, the loss is determined using a CRC check when the system is switched on again. This triggers a message instructing the user to replace the battery and then load the database and/or set the time.

For instructions on how to change the battery, see "Maintenance and servicing".

Keyboard test

On this screen, you can check that the keys are functioning properly. Keys that you press are represented on a symbolic keyboard on the display. You can press keys in any order you wish. You cannot exit the screen (F4 – "Back") until you have pressed each key at least once.

Note

Alternatively, you can exit the keyboard test screen by pressing any key and holding it down.

LED test

On this screen, you can check that the 4 LEDs are functioning properly.

Database statistics

Data related to the database is displayed here (e.g. free memory for additional DOs).

9.3.6 Sprachauswahl / Language Selection

The operator panel downloads the texts for the different languages from the drive.

In the delivery condition without a memory card, you can toggle between German and English. With memory card (from V1.2), French, Italian, Spanish and Russian are also automatically available. The memory card must remain inserted for operation with these languages. The software provided for the update also includes all of the language packages that are available.

You can change the language of the operator panel via the "Sprachauswahl/Language selection" menu.

Note

Languages in addition to those that are currently available for the operator panel are available on request.

9.3.7 Operation via the operator panel (LOCAL mode)

You activate the control keys by switching to LOCAL mode. If the green LED in the LOCAL/REMOTE key does not light up, the key is not active.

Note

If the "OFF in REMOTE" function is activated, the LED in the LOCAL/REMOTE key flashes.

All supplementary setpoints are deactivated for LOCAL master control.

After the master control has been transferred to the operator panel, the BICO interconnections at bit 0 to bit 10 of the control word of the sequence control are not active (refer to function diagram 2501).

9.3.7.1 LOCAL/REMOTE key



Activate LOCAL mode: Press the LOCAL key

LOCAL mode: LED lights up

REMOTE mode: LED does not light up; the ON, OFF, JOG, direction reversal, faster, and slower keys are not active.

Settings: Menu – Commissioning / Service – AOP settings – Control settings

Save LOCAL mode (factory setting: Yes)

- **Yes**: The "LOCAL" or "REMOTE" operating state is saved when the supply voltage is switched off, and restored when the power supply is switched back on.
- **No**: The "LOCAL" or "REMOTE" operating state is not saved. "REMOTE" is activated when the power supply is switched on.

OFF in REMOTE (factory setting: No)

- **Yes**: The OFF button functions in REMOTE mode even if the drive is being controlled from external sources (PROFIBUS, customer terminal strip, NAMUR terminal strip).

  ⚠ WARNING

  No Emergency Stop, Emergency Off or STO function

  The OFF button on the AOP30 operator panel does not comply with the requirements relating to Emergency Stop, Emergency Off or STO function (functional safety)!

  - Only use the OFF button of the AOP30 for switching on or switching off in operation.

- **No**: The OFF button only functions in LOCAL mode.

LOCAL/REMOTE also during operation (factory setting: No)

- **Yes**: You can switch between LOCAL and REMOTE when the drive is switched on (motor is running).
- **No**: Before switching to LOCAL, a check is carried out to determine whether the drive is in the "Operation" status. If it is, switchover is prevented and the error message "Local mode during operation not possible" is output. Before the system switches to REMOTE, the drive is switched off and the setpoint is set to 0.

9.3.7.2 ON key / OFF key



ON key: Active in LOCAL if no operator inhibit lock is activated

OFF key: Always active in LOCAL; active in REMOTE under certain conditions (if the system setting "OFF in REMOTE" is set to "Yes")

OFF key acts as

- **OFF1**: Ramp-down on the down ramp (p50303)
  At speed 0: Disconnection (only if line contactor is present)
- **OFF2**: Immediate pulse inhibit, motor coasts down
- **OFF3**: Ramp-down on the quick stop ramp (p50296)

Factory setting: OFF1

9.3.7.3 CCW/CW changeover

Settings: Menu – Commissioning / Service – AOP settings – Control settings



CCW/CW changeover (factory setting: No)

- **Yes**: CCW/CW changeover by means of the CCW/CW key functions in LOCAL mode
- **No**: The CCW/CW key is inactive.

For safety reasons, the CCW/CW key is disabled in the factory setting (normally pumps and fans must only be operated in one direction).

The direction of rotation that is currently selected is indicated on the operation screen by means of an arrow next to the operating state.

9.3.7.4 Jogging

Settings: Menu – Commissioning / Service – AOP settings – Control settings



JOG key active (factory setting: No)

- **Yes**: In "LOCAL" mode, the JOG key is active in the state "Ready for Switching On" (not in "Operation").
- **No**: The JOG key is not active.

See also function diagram 3125 in the SINAMICS DCM List Manual.

The speed for the JOG function is entered using parameter p50436.

9.3.7.5 Increase setpoint / decrease setpoint



You can use the Increase and Decrease keys to enter the setpoint with a resolution of 1% of the maximum speed.

Alternatively, the setpoint can also be entered via the numeric keypad. To do this, press F2 while on the operation screen. The system displays an inverted edit field for entering the required speed. Enter the required value using the numeric keypad. Press F5 ("OK") to confirm the setpoint.

Any speed between 0 and the maximum speed (p2000) can be entered using the numeric keypad.

Setpoint entry in LOCAL mode is unipolar. You can change the direction of rotation by pressing the key that allows you to switch between CCW/CW rotation.

- CW rotation and "Raise key" mean:
  The displayed setpoint is positive and the speed is increased.
- CCW rotation and "Increase" key mean:
  The setpoint displayed is negative and the speed is increased.

9.3.7.6 AOP setpoint

Settings: MENU – Commissioning / Service – AOP Settings – Control Settings

Save AOP setpoint (factory setting: No)

- **Yes**: In LOCAL mode, the last setpoint (once you have released the Increase or Decrease key or confirmed a numeric entry) is saved.
  The next time you switch the system ON in LOCAL mode, the saved value is selected. This is also the case if you switched to REMOTE in the meantime or the power supply was switched off.
  When the system is switched from REMOTE to LOCAL mode while the drive is switched on (motor is running), the actual value that was last present is set as the output value for the motorized potentiometer setpoint and saved.
  If the system is switched from REMOTE to LOCAL mode while the drive is switched off, the motorized potentiometer setpoint that was last saved is used.
- **No**: On power-up in LOCAL mode, the speed is always set to the value entered under "AOP starting setpoint". When the system is switched from REMOTE to LOCAL mode while the drive is switched on (motor is running), the actual value that was last present is set as the output value for the AOP setpoint.

AOP setpoint ramp-up time (factory setting: 20 s)
Defines the speed at which the setpoint specified by the AOP is increased when the "+" key is pressed.

AOP setpoint ramp-down time (factory setting: 30 s)
Defines the speed at which the setpoint specified by the AOP is decreased when the "-" key is pressed.

AOP starting setpoint (factory setting: 0.000 rpm)
The AOP starting setpoint is the speed setpoint which is active when the drive is switched on (with the "ON" key on the AOP30); The "Save setpoint" system setting must be set to "No" for this purpose (see also the description of the "Save AOP setpoint" system setting).

Note

The internal drive ramp-function generator is always active.

9.3.7.7 Inhibiting AOP Local mode

Settings: MENU – Commissioning / Service – AOP Settings – Control Settings

Inhibit AOP local mode (factory setting: No)

- **Yes**: Deactivates the "Control via operator panel" function, thereby disabling the LOCAL/REMOTE key.
- **No**: Activates the LOCAL/REMOTE key.

Note

LOCAL functionality can also be inhibited on the drive by means of the p0806 parameter (BI: Inhibit master control).

9.3.7.8 Acknowledging errors at the AOP

Settings: MENU – Commissioning / Service – AOP Settings – Control Settings

Acknowledge fault from the AOP (factory setting: Yes)

- **Yes**: Errors can be acknowledged via the AOP.
- **No**: Faults cannot be acknowledged via the AOP.

9.3.7.9 Timeout monitoring

In "LOCAL" mode or if "OFF in REMOTE" is active, the drive is shut down after 1 s. if the data cable between the AOP and drive is disconnected.

9.3.7.10 Operating lock / Parameterization inhibit



To prevent the control keys from being operated and parameters from being changed unintentionally, you can activate an operator inhibit lock/parameters disable using a key-

operated pushbutton. Two key icons appear at the top right of the display when these safety inhibits are enabled.

Table 9-12 Operator inhibit lock/parameters disable

Inhibit type	Online mode	Offline mode
No safety inhibit		
Operator lock		
Parameter disable		
Operator inhibit lock + parameters disable		

Settings

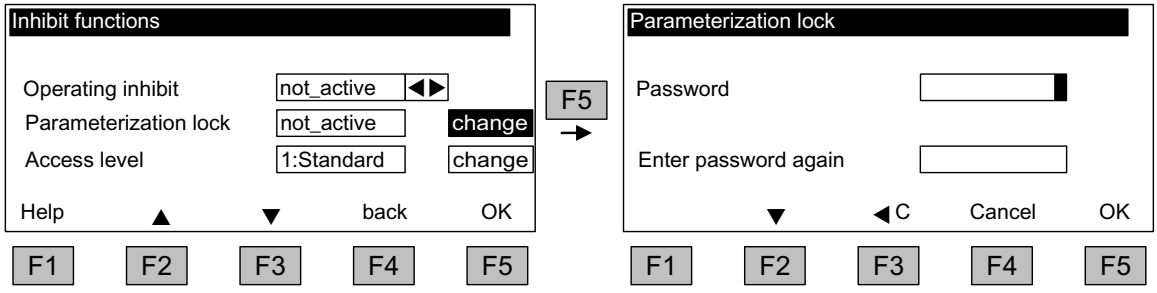

Figure 9-22 Setting safety inhibits

The "Operator inhibit lock" setting can be changed directly via <F5> ("Change") once you have selected the selection box.

When "Parameters disable" is activated, you may enter a numeric password (twice). You must also enter this password when deactivating "Parameters disable".

Operator inhibit lock (factory setting: Not active)

- **Active**: The parameters can still be viewed, but a parameter value cannot be saved (message: "Note: Operator inhibit lock active"). The OFF key (red) is enabled. The LOCAL/REMOTE, ON (green), JOG, CW/CCW, INCREASE, and DECREASE keys are disabled.

Parameters disable (factory setting: Not active)

- **Active**: Parameters cannot be changed unless a password is entered. Parameters are assigned in the same way as in the operator inhibit lock state. If you try to change parameter values, the message "Note: Parameters disable active" is displayed. All the control keys, however, remain enabled.

Access level (factory setting: Expert):

The different parameters required for this complex application are filtered so that they can be displayed as clearly as possible. You select them according to the access level.

An expert level, which must only be used by expert personnel, is required for certain actions.

9.3.8 Faults and alarms

Displaying faults and alarms

If a fault occurs, the drive displays the fault(s) and/or alarm(s) on the operator panel. Faults are indicated by means of the red "FAULT" LED lighting up.

The "Fault/alarm overview" also appears automatically in the following two cases:

1. When a fault is registered while the system is ramping up
2. If the first fault is registered on the operation screen

You can use the F1 (Help) function on the screen to call up information about the cause of the fault and how to remedy it. You can use F5 (Ack.) to acknowledge a stored fault.

Any alarms that are pending are indicated by means of the yellow "ALARM" LED lighting up. Additionally, a note relating to the cause of the alarm is displayed in the status bar of the operator panel.

What is a fault?

A fault is a message from the drive indicating an error or other exceptional (unwanted) status. This could be caused by a fault within the converter or an external fault triggered, for example, by the winding temperature monitoring function for the motor. The faults are displayed and can be reported to a higher-level control system via PROFIBUS.

What is an alarm?

An alarm is the response to a fault condition identified by the drive. It does not result in the drive being switched off and does not have to be acknowledged. Alarms are "self-acknowledging"; that is, they are reset automatically when the cause of the alarm has been eliminated.

Displaying faults and alarms

Every fault and alarm is entered in the fault/alarm buffer along with the time at which it occurred. This time stamp can take two forms:

- Number of days, hours, minutes, and seconds since the AOP was first switched on (format **DDDD: HH:MM:SS**) (no "AOP→ Drive" time synchronization)
- System time (format **YY:MM:DD HH:MM:SS** = Year:Month:Day Hour:Minute:Second), in cases where a time-of-day master is present in the system (if "AOP → Drive" time synchronization is active, for example).

You can call up an overview screen that displays the current status of faults and/or alarms for every drive object in the system by choosing MENU – Fault/alarm memory.

A shortcut menu offering the "Back" and "Ack." options appears when you press F4 ("Tools+"). (You can use F4 to exit the shortcut menu.) The function required can be selected using F2 and F3 and executed by pressing F5 ("OK").
The "Ack." function sends an acknowledgement signal to each drive object.
The red FAULT LED goes out once all the faults have been acknowledged.

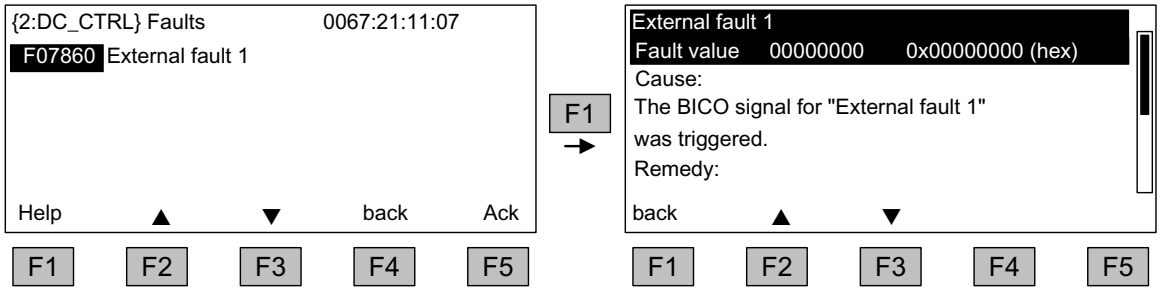

Figure 9-23 Fault screen

You can use F5 (Ack.) to acknowledge a stored fault.

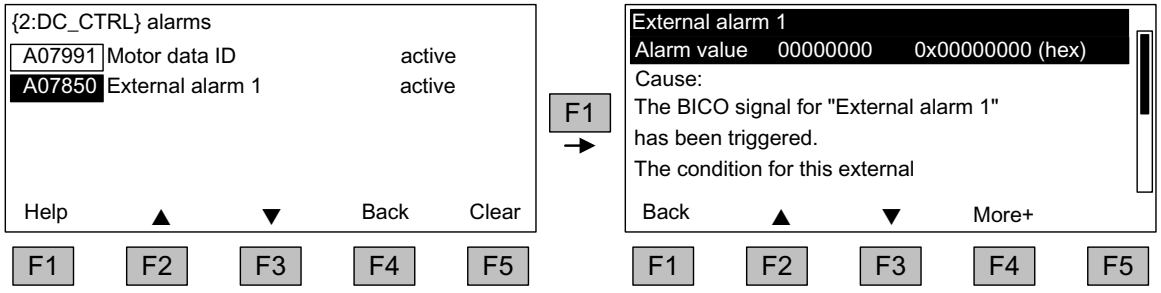

Figure 9-24 Alarm screen

Alarms that are no longer active are removed from the alarm memory with F5 (Clear).

The screen can be updated via a submenu with F4 (More+).

9.3.9 Saving the parameters permanently

Description

If parameters are changed using the operator panel (confirm with OK in the Parameter editor), the new values are initially stored in the volatile memory (RAM) of the converter. An "S" flashes in the top right of the AOP display until they are saved permanently. This indicates that at least 1 parameter has been changed and not yet stored permanently.

2 methods are available for permanently saving parameters that have been changed:

- To store the parameters permanently, choose <MENU> <Parameterization> <OK> <Permanent parameter transfer>.
- When confirming a parameter setting with the OK key, press it for > 1 s. The system displays a message asking you whether the setting is to be saved in the EEPROM.
  If you press "Yes", the system saves the setting in the EEPROM. If you press "No", the setting is not saved permanently and the "S" starts flashing to indicate this fact.

In both cases, **all** changes that have not yet been saved permanently are stored in the EEPROM. Depending on the configuration, this can take from 45 s to several minutes. Also refer to the "CompactFlash Card functions" chapter.

Note

During a data save operation initiated by the user, the electronic power supply for the SINAMICS DCM must not be interrupted.

An active saving process is indicated by the following actions:

- The RDY-LED flashes (see Chapter "Description of the LEDs on the CUD (Page 609)")
- The BOP20 flashes

Interrupting the power supply while saving can lead to the loss of the current device parameter assignments. See also Chapter "Memory card functions (Page 329)".

9.3.10 Parameterization error

If an error is made when reading or writing parameters, a popup window explaining the cause of the problem in plain text appears.

Example: Parameter write error
Value limit exceeded

9.3.11 Assigning parameters to make AOP30 time-of-day master

The AOP30 contains an integrated real-time clock. The SINAMICS DCM system time can be synchronized with this real-time clock.

Activate this function:

- On the AOP30 in the “Menu” - “Commissioning / Service” - “AOP settings” - “Date and Time” menu command activate to "AOP sets clock in SINAMICS".
  The current time in the AOP30 is then written into the drive.

In the display for faults and alarms, the time stamp is now displayed in the format YY-MM-DD hh:mm in real-time. The time stamp mode and the current time can be read from the parameters p3100, p3102 and p3103. For details, please see the SINAMICS DCM List Manual.

The current time is resynchronized at each power-up. (The AOP30 must be switched on together with the drive). During uninterrupted duty, synchronization takes place every day at 02:00.

Descriptions of functions

10

10.1 Inputs/outputs

10.1.1 Overview of inputs/outputs

Table 10-1 Overview of inputs and outputs

Component	Digital	Analog
CUD	• 4 inputs (2 inputs freely available, 2 inputs with ON/OFF1 and controller enable pre-assigned) • 4 bidirectional inputs/outputs • 4 outputs • 1 incremental encoder input	• 7 inputs • 2 outputs • 1 temperature sensor input
Power interface	• 1 E-Stop input • 1 line contactor relay output • 1 fan control relay output • 1 fan monitoring input • 1 external fault input	• 1 analog tachometer input • 2 temperature sensor inputs • 2 current transformer inputs
TM15	• 24 bidirectional inputs/outputs	-
TM31	• 8 inputs • 4 bidirectional inputs/outputs • 2 relay outputs	• 2 inputs • 2 outputs • 1 temperature sensor input
TM150	-	• 12 inputs for max. 12 temperature sensors (PT100, PT1000, KTY84, PTC, bimetal contact) Number depending on connection type
Technical data for inputs and outputs: • For the CUD and power unit, see Chapter “Connecting (Page 67)”. • For the TM15, TM31 and TM150, see Chapter “Additional system components (Page 169)”		

10.1.2 Digital inputs/outputs

Function diagrams in the SINAMICS DCM List Manual

2050	Digital inputs DI 0 ... DI 3
2055	Digital outputs DO 0 ... DO 3
2060	Digital inputs/outputs, bi-directional DI/DO 4 and DI/DO 5
2065	Digital inputs/outputs, bi-directional DI/DO 6 and DI/DO 7
2070	E-Stop (XS1)
8047	Unit fan (XV1, XV2, XV3)

10.1.3 Analog inputs

Properties

Table 10-2 Properties of the analog inputs

Inputs	Properties
AI 0, AI 1	• Differential inputs • Voltage inputs -10 to +10 V or Current inputs -20 to +20 mA or 4 to 20 mA • Hardware input filter: T = 1 ms • Integrating measuring procedure. Averaging time = 1 ms. The average value determined during this time is provided in BICO format.
AI 2	• Differential input • Voltage input -10 to +10 V • Hardware input filter: T = 1 ms • Integrating measuring procedure. Averaging time = 1 ms. The average value determined during this time is provided in BICO format. An external armature current actual value can also be connected to this input (see FP6902).
The 3 inputs AI 0, AI 1 and AI 2 of a CUD on the left and the 3 inputs AI 0, AI 1 and AI 2 of a CUD on the right can be operated so that they are averaged during the same measuring interval. The 6 mean values are provided on 6 BICOs (see FP2083).	
AI 3, AI 4, AI 5, AI 6	• Differential inputs • Voltage inputs -10 to +10 V • Hardware input filter: T = 100 µs • Sampling measuring procedure. Sampling time = 250 µs. The mean value taken from 4 sampling values is provided in BICO format. An external actual armature current value can also be connected to these inputs (see FP6850).

Inputs	Properties
Power interface tachometer input XT1.103/104	• Input referred to ground • High-voltage input -270 V .. +270 V • Hardware input filter: T = 1 ms • Integrating measuring procedure. Averaging time = 1 ms. The average value determined during this time is provided in BICO format. This input is designed for connecting an analog tachometer, but can also be used in other ways.
Power interface XT5, XT6	• Input referred to ground • Connection, NTC 6.8 kΩ, NTC 10 kΩ
Power interface X7, X8	• Input referred to ground • Current transformer connection • Internal 10 Ω load resistors

Function diagrams

2075	Analog inputs, AI 0 and XT1.103/104
2080	Analog inputs, AI 1 and AI 2
2085	Analog inputs, AI 3 and AI 4
2090	Analog inputs, AI 5 and AI 6
8048	Internal unit monitoring functions (XT5,XT6)

10.1.4 Analog outputs

See function diagram 2095 in the SINAMICS DCM List Manual

10.2 Communication, IT security

Note

IT Security (Industrial Security)

In order to ensure the safe operation of your systems, you must take suitable measures, e.g. industrial security or network segmentation. You can find more information on Industrial Security on the Internet at:
IT Security (www.siemens.com/industrialsecurity)

10.2.1 SINAMICS network settings

SINAMICS converters support the communication protocols listed in the following table. The address parameters, the relevant communication layer, as well as the communication role and the communication direction are decisive for each protocol. You require this information to match the security measures for the protection of the automation system to the used protocols (e.g. firewall). The security measures are restricted to Ethernet or PROFINET networks.

The following table shows the various layers and protocols that are used.

PROFINET protocols

PROFINET protocols	Port number	(2) Link layer (4) Transport layer	Function	Description
DCP Discovery and Configuration Protocol	Not relevant	(2) Ethernet II and IEEE 802.1Q and Ethertype 0x8892 (PROFINET)	Accessible nodes, PROFINET Discovery and configuration	DCP is used by PROFINET to determine PROFINET devices and to make basic settings. DCP uses the special multicast MAC address: xx-xx-xx-01-0E-CF, xx-xx-xx = Organizationally Unique Identifier
LLDP Link Layer Discovery Protocol	Not relevant	(2) Ethernet II and IEEE 802.1Q and Ethertype 0x88CC (PROFINET)	PROFINET Link Layer Discovery protocol	LLDP is used by PROFINET to determine and manage neighborhood relationships between PROFINET devices. LLDP uses the special multicast MAC address: 01-80-C2-00-00-0E
MRP Media Redundancy Protocol	Not relevant	(2) Ethernet II and IEEE 802.1Q and Ethertype 0x88E3 (PROFINET)	PROFINET medium redundancy	MRP enables the control of redundant routes through a ring topology. MRP uses the special multicast MAC address: xx-xx-xx-01-15-4E, xx-xx-xx = Organizationally Unique Identifier
PTCP Precision Transparent Clock Protocol	Not relevant	(2) Ethernet II and IEEE 802.1Q and Ethertype 0x8892 (PROFINET)	PROFINET send clock and time synchronisation, based on IEEE 1588	PTC allows the delay time between RJ45 ports to be measured – and as a consequence, send cycle synchronization and time synchronization to be implemented. PTCP uses the special multicast MAC address: xx-xx-xx-01-0E-CF, xx-xx-xx = Organizationally Unique Identifier

PROFINET protocols	Port number	(2) Link layer (4) Transport layer	Function	Description
PROFINET IO data	Not relevant	(2) Ethernet II and IEEE 802.1Q and Ethertype 0x8892 (PROFINET)	PROFINET Cyclic IO data transfer	The PROFINET IO telegrams are used to cyclically transfer IO data between the PROFINET IO controller and IO devices via Ethernet.
PROFINET Context Manager	34964	(4) UDP	PROFINET connection less RPC	The PROFINET context manager provides an endpoint mapper in order to establish an application relationship (PROFINET AR).

Connection-oriented communication protocols

Connection-oriented communication protocols	Port number	(2) Link layer (4) Transport layer	Function	Description
DHCP Dynamic Host Configuration Protocol	68	(4) UDP	Dynamic Host Configuration Protocol	Is used to query an IP address. Is closed when delivered, and is opened when selecting the DHCP mode.
ISO on TCP (according to RFC 1006)	102	(4) TCP	ISO-on-TCP protocol	ISO on TCP (according to RFC 1006) is used for the message-oriented data exchange to a remote CPU, WinAC, or devices of other suppliers. Communication with ES, HMI, etc. Is open in the delivery state and is always required.
SNMP Simple Network Management Protocol	161	(4) UDP	Simple network management protocol	SNMP enables the reading out and setting of network management data (SNMP managed Objects) by the SNMP manager. Is open in the delivery state and is always required.
Internal protocol	5188	(4) TCP	Server/ incoming	Communication with commissioning tools for downloading project data.
Reserved	49152...65535	(4) TCP (4) UDP	-	Dynamic port area that is used for the active connection endpoint if the application does not specify the local port.

EtherNet/IP protocols

EtherNet/IP protocols	Port number	(2) Link layer (4) Transport layer	Function	Description
Explicit messaging	44818	(4) TCP (4) UDP	-	Is used for parameter access, etc. Is closed when delivered, and is opened when selecting EtherNet/IP.
Implicit messaging	2222	(4) UDP	-	Is used for exchanging I/O data. Is closed when delivered, and is opened when selecting EtherNet/IP.

Modbus TCP protocols (server)

Modbus TCP protocols (server)	Port number	(2) Link layer (4) Transport layer	Function	Description
Request & Response	502	(4) TCP	-	Is used for exchanging data packages. Is closed when delivered, and is opened when selecting Modbus TCP.

10.2.2 Time synchronization

10.2.2.1 Overview

In the factory setting, SINAMICS drives use an operating hours counter. Based on the operating hours, the SINAMICS drive saves alarms and warnings that occur. Using this method, it is not possible to have a comparable timestamp between various converters.

In order to obtain a comparable timestamp between several converters, you must change over the operating hours counting to time in the UTC format and synchronize with the time master (control system).

This means that the events of all bus nodes, which are synchronized with the control system time, can be referenced with one another.

Benefits: Improved diagnostic options by having a comparable time stamp of the bus nodes involved.

Converters provide the following options to synchronize the time:

Synchronization type	Accuracy
Basic synchronization	approx. 100ms
Synchronization using ping compensation for non-isochronous communication	approx. 10 ms

Principle of operation of time synchronization

Basic synchronization

The control system transfers the time to the converter at time intervals that you specify in the control system. Transfer is realized acyclically in the UTC format. The converter accepts this time as soon as transfer has been completed without correcting the transfer duration. The converter logs alarms and warnings based on this time.

Time synchronization with ping compensation

At intervals that you specify in the control system, the control system cyclically sends a "ping" (a positive signal edge) to the converter. Simultaneously, in acyclic operation, the device sends the time in the UTC format in what is known as "snap".

As soon as the ping has been received in the drive, a timer starts which measures the time until the snap has been completely transferred. The drive accepts the time that the snap transfers. It then corrects it by the time that has expired between receiving the ping and the complete transfer of the snap.

If the snap has not been transferred within 5 s after receiving the ping, then this synchronization cycle is not used.

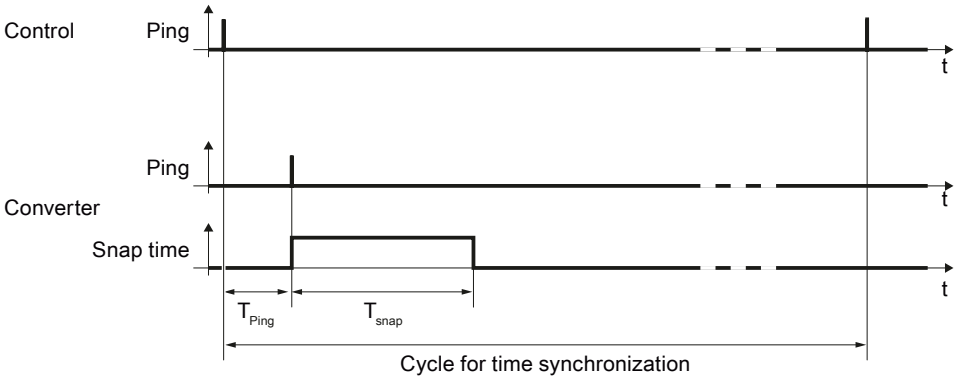

Figure 10-1 Ping snap

You can influence the accuracy of the ping compensation using the PZD sampling time (p2048).

10.2.2.2 Setting SINAMICS time synchronization

Setting time synchronization

1. Using p3100, changeover the time format from operating hours into the UTC format (see "Changing the time format").
2. Set the synchronization technique:
   - Basic synchronization (p3103 = 2)
   - Time synchronization with ping compensation (p3103 = 0)
3. Using p3104, set the ping source:
   - If you implement a customized solution for the time synchronization, then interconnect the source of the ping (p3104) with the cyclic fieldbus interface via BICO.
   - If you use the following blocks, interconnect the source of the ping (p3104) with the receive PZD 1, bit 1 of the CUD (r2090.1).
     - LAcycCom_RTCSinamics of library LAcycCom (see application example 1 further below)
     - SYNC_SINAMICS_CU_TIME (see application example 2 further below)
     As parameter, the blocks expect the basis address of the cyclic telegram to the CU.

Result:

After time synchronization, the current time is obtained from the time transferred by the time master plus the necessary delay time associated with the transfer (ping-snap time).

The actual UTC time is displayed in the drive system using r3102.

At certain intervals, synchronization (according to the same technique) is repeated (depending on the setting in the time master).

If a previously defined tolerance window is exceeded, then alarm A01099 is output. Define the tolerance window for time synchronization using p3109. If alarm A01099 occurs, then generally the synchronization interval is too long.

In this case, reduce the synchronization interval in your control system.

Changing the time format

The time format is entered via parameter p3100. This parameter cannot be changed online To change the value, proceed as follows:

1. Connect STARTER ONLINE with the converter.
2. Carry out an upload ("Load drive unit to PG").
3. Exit the online mode in STARTER.
4. Offline, make the setting p3100 = 1.
5. Reactivate the ONLINE mode.
6. Carry out a parameter download ("Load drive unit to target device").
7. Save the settings in a non-volatile fashion on the memory card of the drive.

You have now changed over the converter time format to the UTC format.

Application examples

Application examples for SINAMICS time synchronization are provided in the SIEMENS "Industry Online Support" (SIOS):

1. SIMATIC S7-1200/S7-1500 and SIMOTION: Acyclic communication
   Time synchronization via LAcycCom_RTCSinamics / LAcycCom_RTCSinamicsAcyclic
   Time synchronization via LAcycCom_RTCSinamics (https://support.industry.siemens.com/cs/de/en/view/109479553)
2. SINAMICS S: Time synchronization between S7-300/400/1200/1500 and S120
   time synchronization via SYNC_SINAMICS_CU_TIME
   Time synchronization via SYNC_SINAMICS_CU_TIME (https://support.industry.siemens.com/cs/de/en/view/88231134)

10.2.2.3 Messages and parameters

Faults and alarms (see SINAMICS DCM List Manual)

- A01099 UTC synchronization tolerance violated

Overview of important parameters (see SINAMICS DCM List Manual)

- p2048 IF1 PROFIdrive PZD sampling time
- p3100 RTC time stamp mode
- p3101[0...1] Set UTC time
- r3102[0...1] Display UTC time
- p3103 UTC synchronization technique
- p3104 BI: UTC PING synchronization
- r3107[0...3] UTC synchronization time out of tolerance
- r3108[0...1] UTC synchronization deviation
- p3109 UTC synchronization tolerance
- p3116 BI: Suppress automatic acknowledgment

10.3 Communication according to PROFIdrive

PROFIdrive is the PROFIBUS and PROFINET profile for drive technology with a wide range of applications in production and process automation systems.

PROFIdrive is independent of the bus system used (PROFIBUS, PROFINET).

Note

PROFINET for drive technology is standardized and described in the following document:

- **PROFIdrive – Profile Drive Technology**
  PROFIBUS User Organization e. V.
  Haid-und-Neu-Straße 7, D-76131 Karlsruhe, Germany
  http://www.profibus.com
- IEC 61800-7

PROFIdrive device classes

Table 10-3 PROFIdrive device classes

PROFIdrive	PROFIBUS DP	PROFINET IO
Peripheral device (P device)	DP device (I devices)	IO Device
Controller (higher-level controller or host of the automation system)	Class 1 DP master	IO Controller
Supervisor (engineering station)	Class 2 DP master	IO Supervisor

Properties of the Controller, Supervisor and drive units

Table 10-4 Properties of the Controller, Supervisor and drive units

Properties	Controller	Supervisor	Drive unit
As bus node	Active		Passive
Send messages	Permitted without external request		Only possible on request by the controller
Receive messages	Possible without any restrictions		Only receive and acknowledge permitted

- Drive unit (PROFIBUS: Device, PROFINET IO: IO Device)
  Example: Control Unit CUD
- Controller (PROFIBUS: Master Class 1, PROFINET IO: IO Controller)
  A controller is typically a higher-level controller in which the automation program runs.
  Example: SIMATIC S7 and SIMOTION
- Supervisor (PROFIBUS: Master Class 2, PROFINET IO: IO Supervisor)
  Devices for configuring, commissioning, operating control and monitoring while the bus is operational.
  Devices that only exchange data with drive units and controllers acyclically.
  Examples: Programming devices, human machine interfaces

Communication services

Two communication services are defined in the PROFIdrive profile; namely, cyclic data exchange and acyclic data exchange.

- Cyclic data exchange via a cyclic data channel:
  Motion control systems require cyclically updated data in operation for open-loop and closed-loop control tasks. This data must be sent to the drive units in the form of setpoints or transmitted from the drive units in the form of actual values, via the communications system. Transmission of this data is usually time-critical.
- Acyclic data exchange via an acyclic data channel:
  An acyclic parameter channel for exchanging parameters between the controller/supervisor and drive units is additionally available. Access to this data is not time-critical.
- Alarm channel
  Alarms are output on an event-driven basis, and show the occurrence and expiry of error states.

Interface IF1 and IF2

The Control Unit CUD can communicate via two separate interfaces (IF1 and IF2).

Table 10-5 Properties of IF1 and IF2

	IF1	IF2
PROFIdrive	Yes	No
Standard telegrams	Yes	No
Isochronous mode	No	No
Drive object types	All	All
Can be used for	PROFINET IO, PROFIBUS DP	PROFINET IO, PROFIBUS DP
Cyclic operation possible	Yes	Yes
PROFIsafe possible	No	No

Note

For additional information on the IF1 and IF2 interfaces, see Chapter “Parallel operation of communication interfaces (Page 410)”.

10.3.1 Application classes

There are different application classes for PROFIdrive according to the scope and type of the application processes. PROFIdrive features a total of six application classes, two of which are discussed here.

Application class 1 (standard drive)

In the most basic case, the drive is controlled via a speed setpoint by means of PROFIBUS/ PROFINET. In this case, speed control is fully handled in the drive controller. Typical application examples include simple frequency converters for controlling pumps and fans.

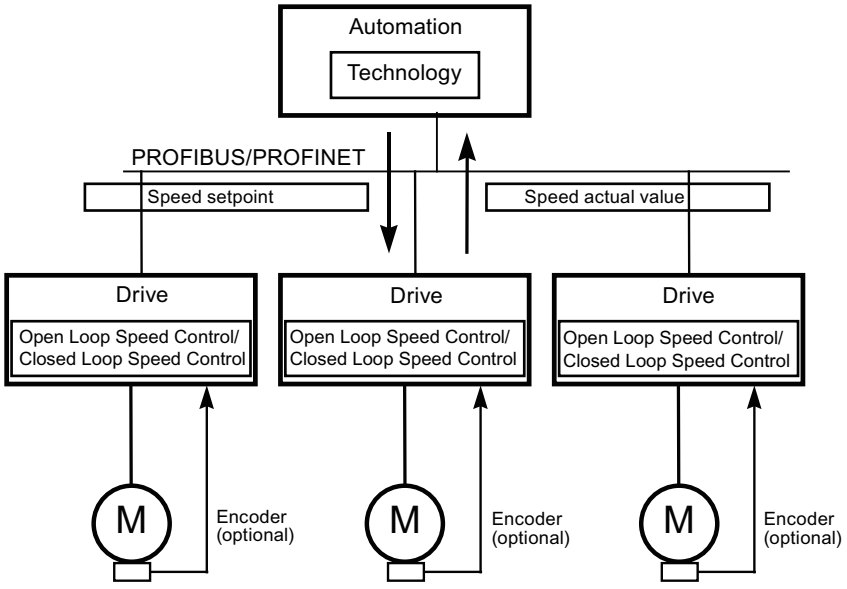

Figure 10-2 Application class 1

Application class 2 (standard drive with technology function)

The total process is subdivided into a number of small subprocesses and distributed among the drives. This means that the automation functions no longer reside exclusively in the central automation device but are also distributed in the drive controllers.
Of course, this distribution assumes that communication is possible in every direction, i.e. also cross-communication between the technology functions of the individual drive controllers.
Specific applications include setpoint cascades, winding drives, and speed synchronization applications for continuous processes with a continuous web.

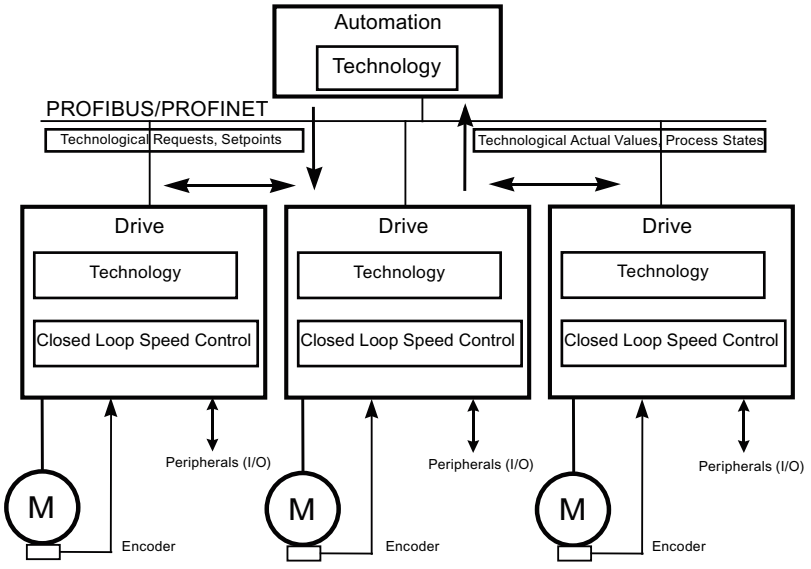

Figure 10-3 Application class 2

Selection of telegrams as a function of the application class

The telegrams listed in the table below (see also Chapter "Telegrams and process data (Page 384)") can be used in the following application classes:

Table 10-6 Selection of telegrams as a function of the application class

Telegram (p0922 = x)	Description	Class 1	Class 2
1	Speed setpoint, 16-bit	x	x
3	Speed setpoint, 32-bit with 1 position encoder		x
4	Speed setpoint, 32-bit with 2 position encoders		
20	Speed setpoint, 16-bit VIK-NAMUR	x	x
220	Speed setpoint, 32-bit for metal industry	x	
352	Speed setpoint, 16-bit, PCS7	x	x
999	Free telegrams	x	x

10.3.2 Cyclic communication

Cyclic communication is used to exchange time-critical process data.

10.3.2.1 Telegrams and process data

The process data (PZD) that is to be transferred is defined by appropriately configuring the drive unit (Control Unit).
For every drive object (CU_DC, DC_CTRL, TM15DI_DO, TM31, TM150) of the SINAMICS DCM, process data can be defined that is to be sent or received.

From the perspective of the drive unit, the received process data represents the receive words and the process data to be sent the send words.

The receive and send words comprise the following elements:

- Receive words: Control words or setpoints
- Send words: Status words or actual values

PROFIdrive telegrams

- Standard telegrams
  The standard telegrams are structured in accordance with the PROFIdrive profile. The internal process data links are set up automatically in accordance with the telegram number setting.
  The following standard telegrams can be set via p0922:
  - 1 Speed setpoint, 16-bit
  - 3 Speed setpoint, 32-bit with 1 position encoder
  - 4 Speed setpoint, 32-bit with 2 position encoders
  - 20 Speed setpoint, 16-bit VIK-NAMUR
- Manufacturer-specific telegrams
  The manufacturer-specific telegrams are structured in accordance with internal company specifications. The internal process data links are set up automatically in accordance with the telegram number setting.
  The following vendor-specific telegrams can be set via p0922:
  - 220 Speed setpoint, 32-bit for metal industry
  - 352 Speed setpoint, 16-bit, PCS7
  - 390 Control Unit with digital inputs/outputs
- Free telegrams (p0922 = 999)
  The send and receive telegrams can be configured as required by using BICO technology to interconnect the send and receive process data.

	DC_CTRL	**CU_DC**	**TM31, TM15DI_DO, TM150**
Receive process data			
DWORD connector output	r2060[0 ... 62]	-	-

	DC_CTRL	CU_DC	TM31, TM15DI_DO, TM150
WORD connector output	r2050[0 ... 63]	r2050[0 ... 19]	r2050[0 ... 4]
Binector output	r2090.0 ... 15 r2091.0 ... 15 r2092.0 ... 15 r2093.0 ... 15		r2090.0 ... 15 r2091.0 ... 15
Free binector-connector converter	p2080[0 ... 15], p2081[0 ... 15], p2082[0 ... 15], p2083[0 ... 15], p2084[0...15] / r2089[0 ... 4]		
Send process data			
DWORD connector input	p2061[0 ... 62]	-	-
WORD connector input	p2051[0 ... 63]	p2051[0 ... 24]	p2051[0 ... 4]
Free connector-binector converter	p2099[0 ... 1] / r2094.0 ... 15, r2095.0 ... 15		

Notes on telegram interconnections

- When you change p0922 = 999 (factory setting) to p0922 ≠ 999, the telegrams are interconnected and blocked automatically.
- Exceptions to this are the telegrams 20, 220, and 352. Here, selected PZDs can be freely interconnected in the send/receive telegram.
- When you change p0922 ≠ 999 to p0922 = 999, the previous telegram interconnection is retained and can be changed.
- If p0922 = 999, a telegram can be selected in p2079. A telegram interconnection is automatically made and blocked. The telegram can also be extended.

This is an easy method for creating extended telegram interconnections on the basis of existing telegrams.

Notes on the telegram structure

- The parameter p0978 contains the drive objects that use a cyclic PZD exchange. A zero is used to demarcate the drive objects that do not exchange PZD.
- If the value 255 is written to p0978, this drive object is visible to the PROFIdrive controller and empty (without actual process data exchange). This permits cyclic communication of a PROFIdrive controller in the following cases:
  - With unchanged configuration to drive units that have a different number of drive objects.
  - With deactivated drive objects, without having to change the project
- The following must apply to ensure conformity with the PROFIdrive profile:
  - Interconnect PZD receive word 1 as control word 1 (STW1).
  - Interconnect PZD send word 1 as status word 1 (ZSW1).
  - The WORD format should be used for PZD1.
- A PZD corresponds to a data word (16 bit).
- Only one of the interconnection parameters (p2051 or p2061) can have the value ≠ 0 for a PZD word, as the assignment of word and double word to the PZDs overlap.

Scaling process data in telegrams

- Physical word and double word variables are transferred in the telegram as reference variables in the value range -200.00% ... +199.99%.
  The following definitions apply:
  – Word interconnection (via p2051[...] or r2050[...])

Value in PZD (fieldbus)			Reference variable
WORD	UINT	INT	
0000 hex	0	0	0.000%
0001 hex	1	+1	+0.006%
...	...	...	...
4000 hex	16,384	+16,384	+100.000%
...	...	...	...
7FFF hex	32,767	+32,767	+199.994%
8000 hex	32,768	-32,768	-200.000%
...	...	...	...
C000 hex	49,152	-16,384	-100.000%
...	...	...	...
FFFF hex	65,535	-1	-0.006%

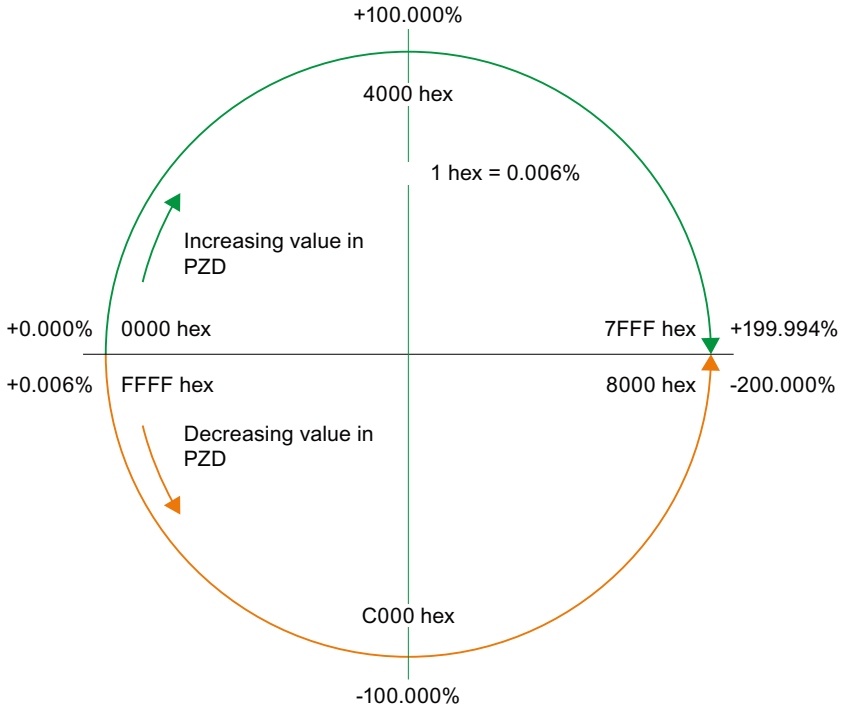

Figure 10-4 The value range and assignment of the value in PZD and reference variable (16 bit / WORD / UINT / integer)

– Double word interconnection (via p2061[...] or r2060[...])

Value in PZD (fieldbus)			Reference variable
DWORD	UDINT	DINT	
0000 0000 hex	0	0	0.000000000 %
0000 0001 hex	1	+1	+0.000000093%
...	...	...	...
4000 0000 hex	1,073,741,824	+1,073,741,824	+100.000000000%
...	...	...	...
7FFF FFFF hex	2,147,483,647	+2,147,483,647	+199.999999907%
8000 0000 hex	2,147,483,648	-2,147,483,648	-200.000000000%
...	...	...	...
C000 0000 hex	3,221,225,427	-1,073,741,824	-100.000000000%
...	...	...	...
FFFF FFFF hex	4,294,967,295	-1	-0.000000093%

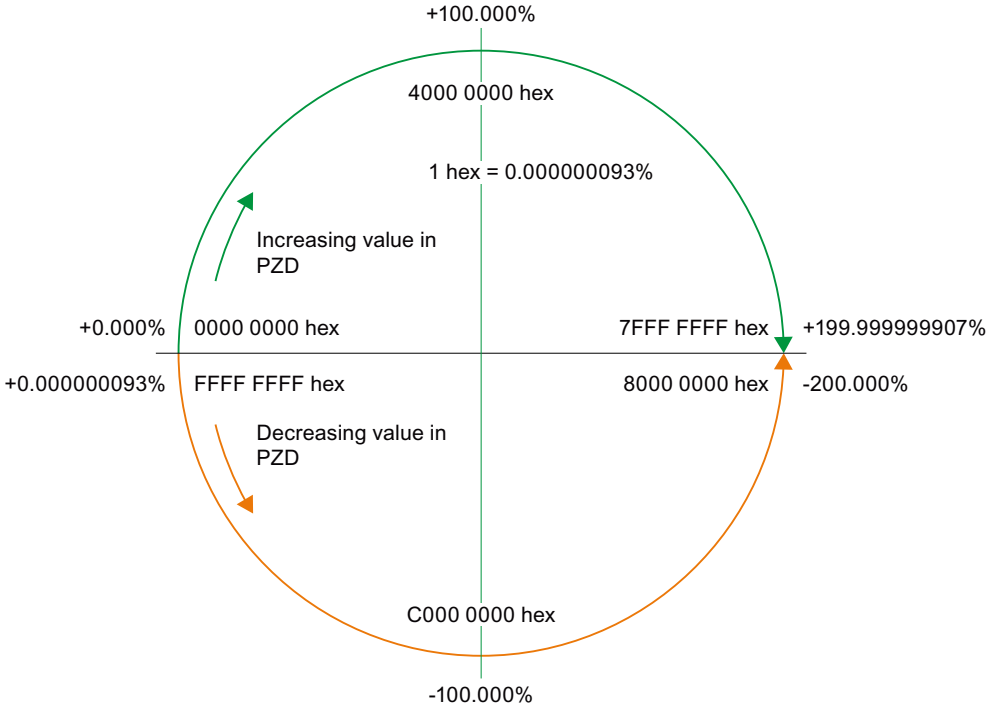

Figure 10-5 The value range and assignment of the value in PZD and reference variable (32 bit / DWORD / UDINT / DINT)

Remark: However, you must take into account the internal scaling of individual physical variables, e.g. r0080 torque, see SINAMICS DCM List Manual.

- The reference variable is specified in the parameter list for every BICO.
  Process data are always scaled to parameters p2000 to r2004.
  However, for SINAMICS DCM, most BICOs have unit "%", and are directly transferred into the telegram as described above.

- Temperatures in the drive (drive object DC_CTRL):
  - 0 °C is transferred as 0.00%.
  - 100 °C is transferred as 100.00%.
- Temperatures for TM31, TM150:
  Temperatures are referred to reference temperature (p2006).
  For a display or setting value of 100.00%, the temperature therefore corresponds to reference temperature of the TM31 or the TM150.
- Electrical angle:
  An electrical angle of 90° corresponds to 100%.

Structure of the telegrams

You can find the structure of the telegrams in the SINAMICS DCM List Manual in the following function diagram:

- 2420: PROFIdrive - telegrams and process data

Drive object	Telegrams (p0922)
DC_CTRL	3, 4, 999
TM15DI_DO	No predefined telegram.
TM31	No predefined telegram.
TM150	No predefined telegram.
CU_DC	390, 999

Depending on the drive object, the following maximum number of process data can be transferred for a user-defined telegram structure:

Drive objects	Maximum number of PZD	
	Send	Receive
DC_CTRL	64	64
TM15DI_DO	5	5
TM31	5	5
TM150	5	5
CU_DC	25	20

Function diagrams (see the SINAMICS DCM List Manual)

- 2410 PROFIdrive - PROFIBUS (PB) / PROFINET (PN), addresses and diagnostics
- 2498 PROFIdrive - I_DIGITAL interconnection

10.3.2.2 Description of control words and setpoints

Overview of control words and setpoints

Table 10-7 Overview of control words and setpoints, see function diagram [2440]

Abbreviation	Name	Signal number	Data type [1]	Interconnection parameter [2]
STW1	Control word 1 for telegram 1, 3, 4, 20, 352	1	U16	(bit-by-bit)
STW2	Control word 2 for telegram 3, 4	3	U16	(bit-by-bit)
NSET_A	Speed setpoint A (16-bit)	5	I16	p1070
NSET_B	Speed setpoint B (32-bit)	7	I32	p50621
G1_STW	Encoder 1 control word	9	U16	p0480[0]
G2_STW	Encoder 2 control word	13	U16	p0480[1]
A_DIGITAL	Digital output (16-bit)	22	U16	(bit-by-bit)
M_LIM	Torque limit	310	U16	p50605[0] p50500[0]
M_ADD	Supplementary torque	311	U16	p50619
STW1_BM	Control word 1, variant for BM	322	U16	(bit-by-bit)
STW2_BM	Control word 2, variant for BM	324	U16	(bit-by-bit)
CU_STW1	Control word 1 for Control Unit	500	U16	(bit-by-bit)

[1] Data type to PROFIdrive Profile V4:
I16 = Integer16, I32 = Integer32, U16 = Unsigned16, U32 = Unsigned32
[2] Bit-by-bit interconnection: Refer to the following pages

STW1 (control word 1)

See function diagram [2442].

Table 10-8 Control word 1 (STW1)

Bit	Meaning	Explanation	Operating condition	BICO
0	0 = OFF1 (OFF1)	0: Deceleration on the down ramp, then pulse inhibit, line contactor (if present) is opened	1	BI: p0840
	0 → 1 = ON	Pulse enable possible		
1	0 = Coast down (OFF2)	0: Pulse inhibit, line contactor (if present) is opened	1	BI: p0844 BI: p0845
	1 = Do not coast down	Enable possible		
	Note: Control signal OFF2 is generated by ANDing BI: p0844 and BI: p0845.			
2	0 = Quick stop (OFF3)	0: Deceleration on the quick stop ramp, then pulse inhibit, line contactor (if present) is opened.	1	BI: p0848
	1 = No quick stop	Enable possible		
	Note: Control signal OFF3 is generated by ANDing BI: p0848 and BI: p0849.			

Bit	Meaning	Explanation	Operating condition	BICO
3	0 = Inhibit operation	0: Pulse inhibit. The motor coasts down. The "Ready for Operation" state remains set.	1	BI: p0852
	1 = Enable operation	1: Pulse enable, ramp-up with active setpoint		
4	0 = Inhibit ramp-function generator	0: The ramp-function generator output is set to setpoint "0".	1	BI: p1140
	1 = Enable ramp-function generator			
5	0 = Stop ramp-function generator	0: The current setpoint is frozen at the ramp-function generator output.	1	BI: p1141
	1 = Start ramp-function generator			
6	1 = Enable speed setpoint	1: The speed setpoint at the input of the ramp-function generator is enabled.	1	BI: p1142
	0 = Inhibit speed setpoint	0: The speed setpoint at the input of the ramp-function generator is set to zero. The drive brakes in accordance with the set ramp-down time.		
7	0 → 1 = Acknowledge fault	A positive edge change acknowledges all the current faults.	-	BI: p2103
	Note: Acknowledgement is realized with a 0/1 edge via BI: p2103 or BI: p2104 or BI: p2105.			
8	Reserved		-	-
9	Reserved		-	-
10	1 = Control via PLC	1: PROFIBUS control words and setpoints are analyzed.	1	BI: p0854
		0: PROFIBUS control words and setpoints are not analyzed.		
	Note: This bit should not be set to "1" until the PROFIBUS device has returned an appropriate status via ZSW1.9 = "1".			
11	1 = setpoint inversion	1: Setpoint is inverted	-	BI: p1113
		0: The setpoint is not inverted		
12	Reserved		-	-
13	1 = Motorized potentiometer, higher	Only when p0922 = 1 or 352, otherwise reserved	-	BI: p1035
14	1 = Motorized potentiometer, lower	Only when p0922 = 1 or 352, otherwise reserved	-	BI: p1036
	Note: If "Motorized potentiometer, higher" and "Motorized potentiometer, lower" are both 0 or 1 at the same time, the current setpoint is frozen.			
15	1 = CDS bit 0 (only with telegrams p0922 = 20!)	1: Command data set changeover (CDS) bit 0 is active.	-	BI: p0810
		0: Command data set changeover (CDS) bit 0 is inactive.		
	Reserved	When p0922 = 1 or 352	-	-

STW2 (control word 2)

See function diagram [2444].

Table 10-9 Control word 2 (STW2)

Bit	Meaning	Interconnection parameter
0	Drive data set selection DDS, bit 0	p0820[0] = r2093.0
1	Drive data set selection DDS, bit 1	p0821[0] = r2093.1
2 to 11	Reserved	-
12	Master sign-of-life bit 0	p2045 = r2050[3]
13	Master sign-of-life bit 1	
14	Master sign-of-life bit 2	
15	Master sign-of-life bit 3	

STW1_BM (control word 1, metal industry)

See function diagram [2425].

Table 10-10 Description of STW1_BM (control word 1, metal industry)

Bit	Meaning	Interconnection parameter
0	0 = OFF (OFF1) ⌐↑ = ON	p0840[0] = r2090.0
1	0 = OFF2 (immediate pulse cancellation with switching on inhibited) 1 = No OFF2 (enable is possible)	p0844[0] = r2090.1
2	0 = OFF3 (braking along the OFF3 ramp, then pulse suppression with switching on inhibited) 1 = No OFF3 (enable is possible)	p0848[0] = r2090.2
3	0 = Inhibit operation 1 = Enable operation	p2816[0] = r2090.3
4	0 = Set ramp-function generator zero 1 = Enable ramp-function generator	p1140[0] = r2090.4
5	0 = Freeze ramp-function generator 1 = Continue ramp-function generator	p1141[0] = r2090.5
6	0 = Speed setpoint = 0 1 = Speed setpoint enable	p1142[0] = r2090.6
7	⌐↑ = Acknowledge fault	p2103[0] = r2090.7
8	Reserved	-
9	Reserved	-
10	1 = Control via PL [1)]	p0854[0] = r2090.10
11 to 15	Reserved [2)]	-

1) STW1.10 must be set in order for the drive object to accept the process data (PZD).

2) Interconnection is not disabled.

STW2_BM (control word 2, metal industry)

See function diagram [2426].

Table 10-11 Description of STW1_BM (control word 1, metal industry)

Bit	Meaning	Interconnection parameter
0	Command data set selection CDS bit 0	p0810 = r2093.0
1	Reserved	-
2	Drive data set selection, CDS bit 0 [1)]	p0820[0] = r2093.2
3	Drive data set selection, CDS bit 1 [1)]	p0821[0] = r2093.3
4	Reserved	-
5	1 = Bypass ramp-function generator	p50641[0] = r2093.5
6	Reserved	-
7	1 = Speed controller integration value set	p50695[0] = r2093.7
8	1 = Enable droop	p50684[0] = r2093.8
9	1 = Enable speed controller [1)]	p0856[0] = r2093.9
10	Reserved [1)]	-
11	0 = Speed-controlled mode 1 = Torque-controlled mode	p50687[0] = r2093.11
12	Reserved [1)]	-
13	Reserved [1)]	-
14	Reserved [1)]	-
15	Controller sign-of-life toggle bit	p2081[15] = r2093.15

[1)] Interconnection is not disabled.

NSET_A (speed setpoint A (16-bit))

- Speed setpoint with a 16-bit resolution with sign bit.
- Bit 15 determines the sign of the setpoint:
  - Bit = 0 → Positive setpoint
  - Bit = 1 → Negative setpoint
- The speed is normalized via p2000.
  NSET_A = 4000 hex or 16384 dec ≙ speed in p2000

NSET_B (speed setpoint B (32-bit))

- Speed setpoint with a 32-bit resolution with sign bit.
- Bit 31 determines the sign of the setpoint:
  - Bit = 0 → Positive setpoint
  - Bit = 1 → Negative setpoint
- The speed is normalized via p2000.
  NSET_B = 4000 0000 hex or 1 073 741 824 dec ≙ speed in p2000

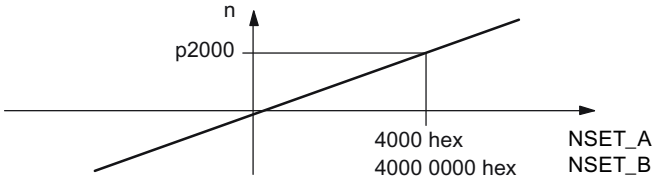

Figure 10-6 Speed scaling

Note

Operation of motors in the field-weakening range

If the motors are to be operated in the field-weakening range > 2:1, the value of parameter p2000 must be set ≤ 1/2 x maximum speed of the drive object.

Gn_STW (encoder n control word)

This process data belongs to the encoder interface.

A_DIGITALCU_STW1

This process data is part of the central process data.

10.3.2.3 Description of status words and actual values

Overview of status words and actual values

Table 10-12 Overview of status words and actual values, see function diagram [2450]

Abbreviation	Name	Signal number	Data type [1)]	Interconnection parameter
ZSW1	Status word 1	2	U16	r2089[0]
ZSW2	Status word 2	4	U16	r2089[1]
NACT_A	Speed setpoint A (16-bit)	6	I16	r0063
G1_ZSW	Encoder 1 status word	10	U16	r0481[0]
G1_XIST1	Encoder 1 actual position value 1	11	U32	r0482[0]
G1_XIST2	Encoder 1 actual position value 2	12	U32	r0483[0]

Abbreviation	Name	Signal number	Data type [1]	Interconnection parameter
G2_ZSW	Encoder 2 status word	14	U16	r0481[1]
G2_XIST1	Encoder 2 actual position value 1	15	U32	r0482[1]
G2_XIST2	Encoder 2 actual position value 2	16	U32	r0483[1]
E_DIGITAL	Digital input (16-bit)	21	U16	r2089[2]
IAIST_GLATT	Absolute actual current value, smoothed	51	I16	r0027
MIST_GLATT	Actual torque value, smoothed	53	I16	r0080
PIST_GLATT	Active power, smoothed	54	I16	r0032
NACT_A_GLATT	Actual speed value, smoothed	57	I16	r0021
MELD_NAMUR	VIK-NAMUR message bit bar	58	U16	r3113
FAULT_CODE	Fault code	301	U16	r2131
WARN_CODE	Alarm code	303	U16	r2132
ZSW1_BM	Status word 1, variant for BM	323	U16	r2089[0]
ZSW2_BM	Status word 2, variant for BM	325	U16	r2089[1]
CU_ZSW1	Status word 1 for Control Unit	501	U16	r2089[1]

[1] Data type according to PROFIdrive profile V4:
I16 = Integer16, I32 = Integer32, U16 = Unsigned16, U32 = Unsigned32

ZSW1 (status word 1)

See function diagram [2452].

Table 10-13 Description of status word 1 (ZSW1)

Bit	Meaning	Explanation		Parameter
0	Ready for switching on	1	Ready for switching on Power supply on, electronics initialized, line contactor released if necessary, pulses inhibited	BO: r0899.0
		0	Not ready for switching on	
1	Ready for operation	1	Ready for operation Line voltage applied, i.e. line contactor closed (if present), field being built up	BO: r0899.1
		0	Not ready for operation Reason: No ON command has been issued.	
2	Operation enabled	1	Operation enabled Enable electronics and pulses, then ramp up to active setpoint	BO: r0899.2
		0	Operation disabled	
3	Fault active	1	Fault active The drive is faulty and, therefore, out of service. The drive switches to "switching on inhibited" once the fault has been acknowledged and the cause has been remedied. The active faults are stored in the fault buffer.	BO: r2139.3
		0	No fault active There are no faults in the fault buffer.	

Bit	Meaning	Explanation		Parameter
4	Coasting down not active (OFF2 inactive)	1	Coasting down (OFF2) not active	BO: r0899.4
		0	Coasting down active (OFF2) An OFF2 command is active.	
5	Quick stop not active (OFF3 inactive)	1	Quick stop (OFF3) not active	BO: r0899.5
		0	Quick stop active (OFF3) An OFF3 command is active.	
6	Switching on inhibited active	1	Switching on inhibited Switching back on is only possible by means of OFF1 and then ON.	BO: r0899.6
		0	No switching on inhibited Switching on is possible.	
7	Alarm active	1	Alarm active The drive is operational again. No acknowledgement necessary. The active alarms are stored in the alarm buffer.	BO: r2139.7
		0	No alarm active No alarms in the alarm buffer.	
8	Speed setpoint/actual value deviation in tolerance	1	Setpoint/actual value monitoring in tolerance band Actual value within tolerance band; dynamic overshoot or undershoot permitted for t < tmax, tmax can be parameterized. See FP8020 and FP2534	BO: r2197.7
		0	Setpoint/actual value monitoring not within tolerance band	
9	Control request "1" is always present	1	The automation system is requested to assume control.	BO: r0899.9
		0	Control is only possible at the unit itself	
10	n setpoint reached or exceeded	1	n setpoint reached or exceeded	BO: r2199.1
		0	n setpoint not reached	
	Note: The message is parameterized as follows: p50373 (threshold value), p50374 (hysteresis) See FP8020 and FP2537			
11	I or M limit not reached (when p0922 = 1 or 352)	1	I or M limit not reached	BO: r1407.7 (inverted)
		0	I or M limit reached or exceeded	
	I or M limit not reached (when p0922 = 20)	1	I or M limit not reached	BO: r0056.13 (inverted)
		0	I or M limit reached or exceeded	
12	Holding brake released (when p0922 = 1 or 352)	1	Holding brake is released	BO: r0899.12
		0	Holding brake is closed	
	Reserved (when p0922 = 20)			
13	No motor overtemperature alarm	1	Alarm overtemperature motor not pending	BO: r2135.14 (inverted)
		0	Motor overtemperature alarm pending	
14	Motor rotates forward (n_act ≥ 0)	1	Motor rotates forward (n_act ≥ 0)	BO: r2197.3
		0	Motor does not rotate forward (n_act < 0)	
15	Reserved (when p0922 = 1 or 352)			
	CDS display (when p0922 = 20)	1	CDS selection bit 0 selected	BO: r0836.0
		0	CDS selection bit 0 not selected	

ZSW2 (status word 2)

See function diagram [2454].

Table 10-14 Status word 2 (ZSW2)

Bit	Meaning	Interconnection parameter
0	1 = Drive data set selection DDS effective, bit 0	p2081[0] = r0051.0
1	1 = Drive data set selection DDS effective, bit 1	p2081[1] = r0051.1
2	Reserved	-
3	Reserved	-
4	Reserved	-
5	1 = Alarm class bit 0	p2081[5] = r2139.11
6	1 = Alarm class bit 1	p2081[6] = r2139.12
7	Reserved	-
8	Reserved	-
9	Reserved	-
10	1 = Enable pulses	p2081[10] = r0899.11
11 to 15	Reserved	-

ZSW1_BM (status word 1, metal industry)

See function diagram [2428].

Table 10-15 Status word 1, metal industry (ZSW1 BM) [1)]

Bit	Meaning	Interconnection parameter
0	1 = Ready to switch on	p2080[0] = r0899.0
1	1 = Ready	p2080[1] = r0899.1
2	1 = Enable operation 1	p2080[2] = r2811.0
3	1 = Fault present	p2080[3] = r2139.3
4	0 = Coast to stop active (OFF2)	p2080[4] = r0899.4
5	0 = Quick stop active (OFF3)	p2080[5] = r0899.5
6	1 = Switching on inhibited active	p2080[6] = r0899.6
7	1 = Alarm present	p2080[7] = r2139.7
8	1 = Speed setpoint/actual-value deviation in tolerance	p2080[8] = r2197.7
9	1 = Control requested [2)]	p2080[9] = r0899.9
10	1 = n comparison value reached or exceeded	p2080[10] = r2199.1
11	1 = Torque limit not reached	p2080[11] = r1407.7
12	1 = Open holding brake	p2080[12] = r0899.12
13 to 15	Reserved [3)]	-

1) ZSW1 BM is formed via binector-connector converter (BI: p2080[0...15], inversion: p2088[0].0...p2088[0].15).

2) The drive object is ready for acceptance.

3) Interconnection is not disabled.

ZSW2_BM (status word 2, metal industry)

See function diagram [2429].

Table 10-16 Status word 2, metal industry (ZSW2 BM)

Bit	Meaning	Interconnection parameter
0 to 4	Reserved [1)]	-
5	1 = Alarm class bit 0	p2081[5] = r2139.11
6	1 = Alarm class bit 1	p2081[6] = r2139.12
7	Reserved	-
8	Reserved	-
9	1 = Speed setpoint limited	p2081[9] = r1407.11
10	1 = Upper torque limit reached	p2081[10] = r1407.8
11	1 = Lower torque limit reached	p2081[11] = r1407.9
12	1 = Encoderless operation because of fault	p2081[12] = r1407.13
13	Reserved	-
14	Reserved	-
15	Controller sign of life toggle bit	p2081[15] = r2093.15

1) Interconnection is not disabled.

NACT_A (speed setpoint A (16-bit))

- Actual speed value with 16-bit resolution.
- The speed actual value is normalized in the same way as the setpoint (see NSET_A).

NACT_B (speed setpoint B (32-bit))

- Actual speed value with 32-bit resolution.
- The speed actual value is normalized in the same way as the setpoint (see NSET_B).

Gn_ZSW (encoder n status word)Gn_XIST1 (encoder n actual position value 1)Gn_XIST2 (encoder n actual position value 2)

This process data belongs to the encoder interface.

E_DIGITALCU_ZSW1

This process data is part of the central process data.

IAIST_GLATT

The absolute current actual value smoothed with p0045 is displayed.

MIST_GLATT

The actual torque value smoothed with p0045 is displayed.

PIST_GLATT

The active power smoothed with p0045 is displayed.

NACT_A_GLATT

The actual speed value smoothed with p0045 is displayed.

MELD_NAMUR

Display of the NAMUR message bit bar.

WARN_CODE

Display of the alarm code (see function diagram [8065]).

FAULT_CODE

Display of the fault code (see function diagram [8060]).

10.3.2.4 Control and status words for encoders

The process data for the encoders is available in various telegrams. For example, telegram 3 is provided for speed control with 1 position encoder and transmits the process data of encoder 1.

The following process data is available for the encoders:

- Gn_STW encoder n control word (n = 1, 2)
- Gn_ZSW encoder n status word
- Gn_XIST1 encoder n act. pos. value 1
- Gn_XIST2 encoder n act. pos. value 2

Note

Encoder 1: Motor encoder

Encoder 2: Direct measuring system

Example of encoder interface

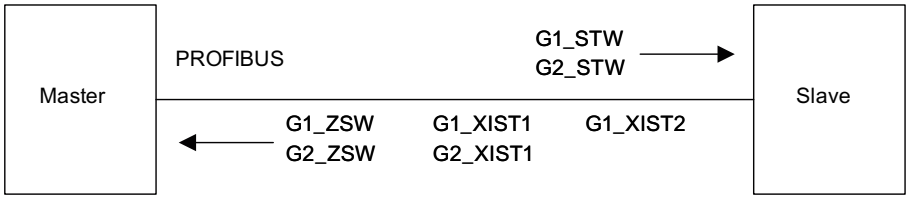

Figure 10-7 Example of encoder interface (encoder-1: Two actual values, encoder -2: One actual value)

Encoder n control word (Gn_STW, n = 1, 2)

The encoder control word controls the encoder functions.

See function diagram [4720].

Table 10-17 Description of the individual signals in Gn_STW

Bit	Name		Signal status, description		
0 1 2 3	Find reference mark or flying measurement	Functions	If bit 7 = 0, then find reference mark request applies:		
			Bit	Meaning	
			0	Function 1	Reference mark 1
			1	Function 2	Reference mark 2
			2	Function 3	Reference mark 3
			3	Function 4	Reference mark 4
			If bit 7 = 1, then find flying measurement request applies:		
			0	Function 1	Probe 1 rising edge
			1	Function 2	Probe 1 falling edge
			2	Function 3	Probe 2 rising edge
			3	Function 4	Probe 2 falling edge
			Note:		
			• Bit x = 1 Bit x = 0		Request function Do not request function
			• If more than 1 function is activated, then the following applies: The values for all functions cannot be read until each activated function has terminated and this has been confirmed in the corresponding status bit (ZSW.0/.1/.2/.3 "0" signal again). • Reference mark search It is possible to search for a reference mark. • External zero mark • Flying measuring Positive and negative edges can be simultaneously selected.		

Bit	Name		Signal status, description	
4 5 6		Command	Bit 6, 5, 4	Meaning
			000	No function
			001	Activate selected function
			010	Read generated value
			011	Cancel function
			(x: Function selected using bit 0 to 3)	
7		Mode	1	Not permitted
			0	Reference mark search (fine resolution via p0418)
8... 12	Reserved		-	
13	Request cyclic absolute value		1	Request cyclic transfer of the absolute actual position value in Gn_XIST2. Used for (e.g.): • Additional measuring system monitoring • Synchronization during ramp-up
			0	No request
14	Parking encoder		1	Request parking encoder (handshake with Gn_ZSW bit 14)
			0	No request
15	Acknowledge encoder fault		0/1	Request to reset encoder errors
				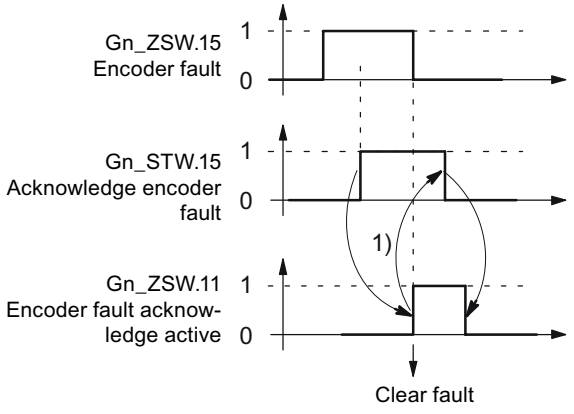 1) Signal must be reset by user.
			0	No request

Example: Reference mark search

Assumptions for the example:

- Distance-coded reference mark
- Two reference marks (function 1/function 2)
- Position control with encoder 1

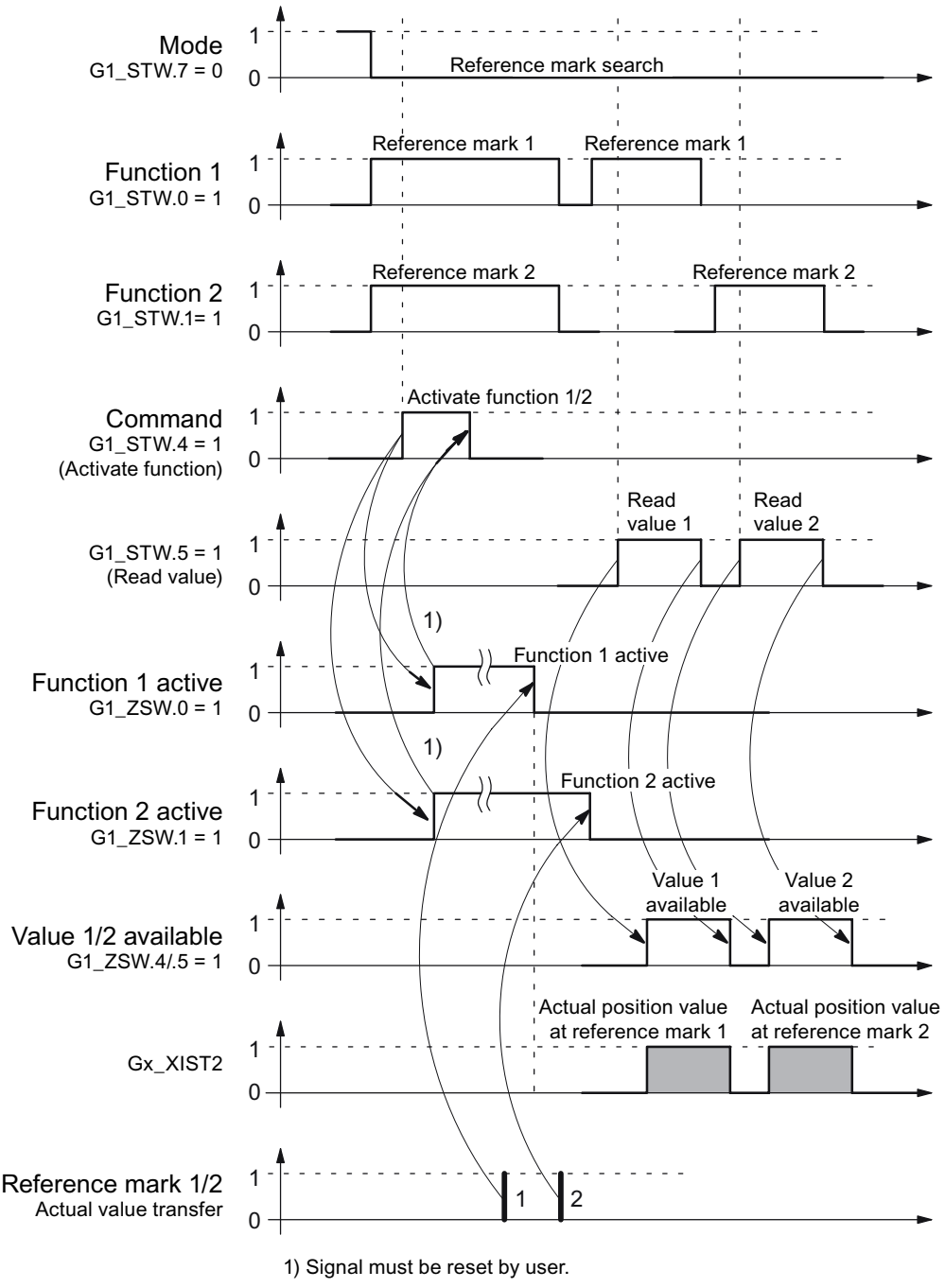

Figure 10-8 Sequence chart for "Reference mark search"

Encoder 2 control word (G2_STW)

- See G1_STW

Encoder n status word (Gn_ZSW, n = 1, 2)

The encoder status word is used to display states, errors and acknowledgements.

See function diagram [4730]

Table 10-18 Description of the individual signals in Gn_ZSW

Bit	Name		Signal status, description		
0 1 2 3	Reference mark search	Status: Function 1 - 4 active	Valid for "Reference mark search" and "Flying measurement"		
			Bit	Meaning	
			0	Function 1	Reference mark 1
			1	Function 2	Reference mark 2
			2	Function 3	Reference mark 3
			3	Function 4	Reference mark 4
			Note: • Bit x = 1 function active Bit x = 0 function inactive		
4 5 6 7		Status: Value 1 - 4 available	Applies to reference mark search		
			Bit	Meaning	
			4	Value 1	Reference mark 1 Probe 1 rising edge
			5	Value 2	Reserved
			6	Value 3	Reserved
			7	Value 4	Reserved
			Note: • Bit x = 1 value available Bit x = 0 value not available • Only one single value can be retrieved. Reason: There is only one common status word Gn_XIST2 to read the values.		
8		Reserved	1	Reserved	
			0	Reserved	
9	Reserved		1	Reserved	
			0	Reserved	
10	Reserved		-		
11	Encoder fault acknowledge active		1	Encoder fault acknowledge active **Note:** See at STW.15 (acknowledge encoder error)	
			0	No acknowledgement active	
12	Reserved		-		
13	Transmit absolute value cyclically		1	Acknowledgement for Gn_STW.13 (request absolute value cyclically) **Note:** Cyclic transmission of the absolute value can be interrupted by a function with higher priority. • See Gn_XIST2	
			0	No acknowledgement	

Bit	Name	Signal status, description	
14	Parking encoder	1	Parking encoder active (i.e. parking encoder switched off)
		0	No active parking encoder
15	Encoder fault	1	Error from encoder or actual-value sensing is active. **Note:** The error code is stored in Gn_XIST2.
		0	No error is active.

Encoder 1 actual position value 1 (G1_XIST1)

- Resolution: Encoder lines · 2n
  n: Fine resolution, no. of bits for internal multiplication
  The fine resolution is specified via p0418.
- Used to transfer the cyclic actual position value to the controller.
- The transferred value is a relative, free-running actual value.
- Any overflows must be evaluated by the master controller.

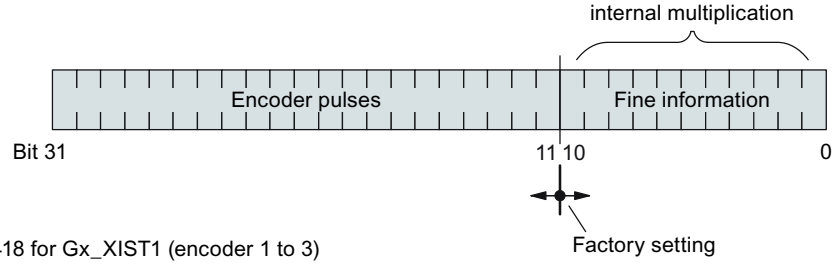

Figure 10-9 Subdivision and settings for Gx_XIST1

- Encoder lines of incremental encoder
  - For encoders with sin/cos 1Vpp:
    Encoder lines = no. of sinusoidal signal periods
- After power-up: Gx_XIST1 = 0
- An overflow in Gx_XIST1 must be viewed by the master controller.
- There is no modulo interpretation of Gx_XIST1 in the drive.

Encoder 1 actual position value 2 (G1_XIST2)

Different values are entered in Gx_XIST2 depending on the function.

- Priorities for Gx_XIST2

The following priorities should be considered for values in Gx_XIST2:

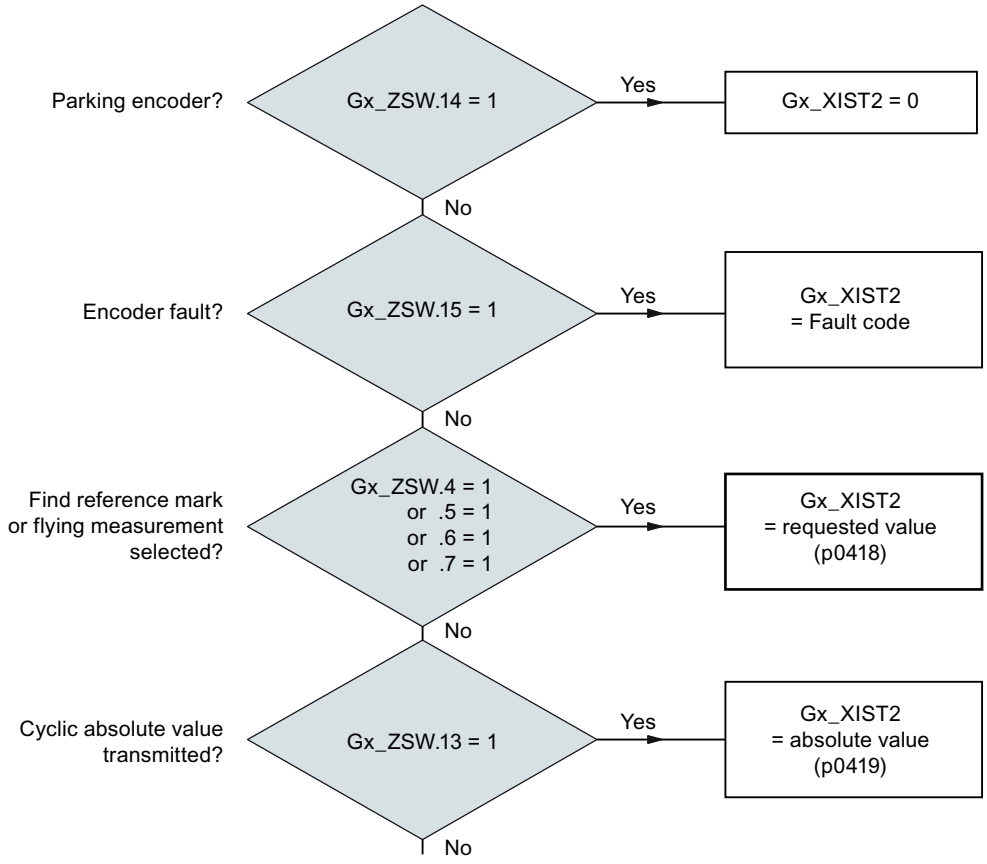

Figure 10-10 Priorities for functions and Gx_XIST2

- Resolution: Encoder pulses · 2n
  n: Fine resolution, no. of bits for internal multiplication

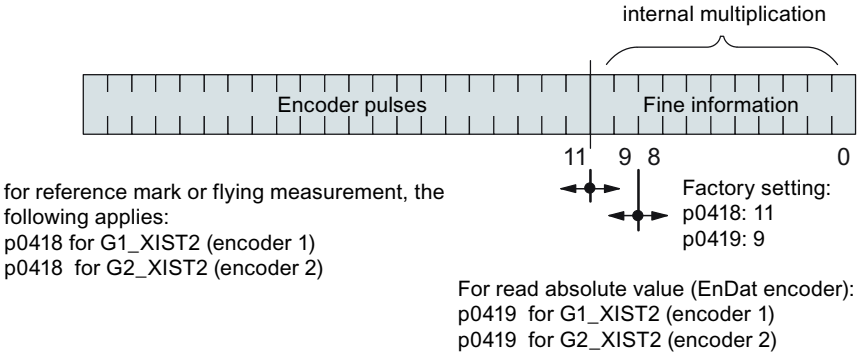

Figure 10-11 Subdivision and settings for Gx_XIST2

- Encoder lines of incremental encoder
  - For encoders with sin/cos 1Vpp:
    Encoder lines = no. of sinusoidal signal periods

Error code in Gn_XIST2

Table 10-19 Error code in Gn_XIST2

n_XIST2	Meaning	Possible causes / description
1	Encoder fault	One or more existing encoder faults. Detailed information in accordance with drive messages.
2	Zero mark monitoring	–
3	Abort parking sensor	• Parking drive object already selected.
4	Abort find reference mark	• A fault exists (Gn_ZSW.15 = 1) • Encoder has no zero mark (reference mark) • Reference mark 2, 3 or 4 is requested • Switchover to "Flying measurement" during search for reference mark • Command "Read value x" set during search for reference mark • Inconsistent position measured value with distance-coded reference marks.
5	Abort retrieve reference value	• More than four values requested • No value requested • Requested value not available
6	Abort flying measurement	• No probe configured p0488, p0489 • Switch over to "reference mark search" during flying measurement • Command "Read value x" set during flying measurement
7	Abort get measured value	• More than one value requested • No value requested • Requested value not available • Parking encoder active • Parking drive object active
8	Abort absolute value transmission on	• Absolute encoder not available • Alarm bit absolute value protocol set
3841	Function not supported	–

Encoder 2 status word (G2_ZSW)

- See Gn_ZSW

Encoder 2 actual position value 1 (G2_XIST1)

- See Gn_XIST1

Encoder 2 actual position value 2 (G2_XIST2)

- See Gn_XIST2

Function diagrams (see the SINAMICS DCM List Manual)

- 4720 Encoder evaluation - Encoder interface, receive signals, encoders 1 ... 2
- 4730 Encoder evaluation - Encoder interface, send signals, encoders 1 ... 2
- 4735 Encoder evaluation - Reference mark search with external zero mark, encoders 1 ... 2

Overview of important parameters (see SINAMICS DCM List Manual)

Adjustable parameter drive, CU_S parameter is marked

- p0418[0...15] Fine resolution Gx_XIST1 (in bits)
- p0419[0...15] Fine resolution absolute value Gx_XIST2 (in bits)
- p0480[0...2] CI: Encoder control word Gn_STW signal source

Display parameters drive

- r0481[0...2] CO: Encoder status word Gn_ZSW
- r0482[0...2] CO: Encoder actual position value Gn_XIST1
- r0483[0...2] CO: Encoder actual position value Gn_XIST2
- r0487[0...2] CO: Diagnostic encoder control word Gn_STW
- r0979[0...30] PROFIdrive encoder format

10.3.2.5 Extended encoder evaluation

The standard parameter r0979[0...30] describes the assignment from the telegram configuration view.

Index 1 describes the encoder type. Subindex 1 provides further properties of the encoder:

Table 10-20 r0979 subindex 1

Bit	Signal	Description
0	= 0 = 1	Rotating encoder Linear encoder
1	= 0 = 1	No fine resolution possible Fine resolution possible
2	= 0 = 1	64-bit not possible Reserved
3 - 28		In accordance with the PROFIdrive profile definition
29	= 0 = 1	Encoder switchable Encoder not switchable
30	= 0 = 1	Interface information still to be received No further interface information will be received
31	= 0 = 1	Data in the substructure is invalid Data in the substructure is valid

10.3.2.6 Central control and status words

Description

The central process data exists for different telegrams. For example, telegram 390 is used for transferring digital inputs and digital outputs.

The following central process data is available:

Receive signals:

- CU_STW1 Control Unit control word
- A_DIGITAL digital outputs

Transmit signals:

- CU_ZSW1 Control Unit status word
- E_DIGITAL digital inputs
- E_DIGITAL_1 digital inputs

CU_STW1 (control word for Control Unit, CU)

See function diagram [2495].

Table 10-21 Description of CU_STW1 (control word for Control Unit)

Bit	Meaning	Remarks		Interconnection parameter
0	Reserved	–	–	–
1	RTC PING	–	This signal is used to set the UTC time using the PING event.	p3104 = r2090.1
2...6	Reserved	–	–	–
7	Acknowledge faults		Acknowledge faults	p2103[0] = r2090.7
8...9	Reserved	-	-	-
10	Control transferred	0	The CU has control Once the propagated faults have been acknowledged at all drive objects, the fault is also implicitly acknowledged at drive object 1 (DO1 ≙ CU).	p3116 = r2090.10
		1	External control has control The propagated faults must be acknowledged at all drive objects and must also be explicitly acknowledged at drive object 1 (DO1 ≙ CU).	
11...15	Reserved	–		-

A_DIGITAL (digital outputs)

This process data can be used to control the Control Unit outputs.
See function diagram [2497].

Table 10-22 Description of A_DIGITAL (digital outputs)

Bit	Meaning	Interconnection parameter
0	Digital output 0 (DO 0)	p50771[0] = r2091.0
1	Digital output 1 (DO 1)	p50772[0] = r2091.1
2	Digital output 2 (DO 2)	p50773[0] = r2091.2
3	Digital output 3 (DO 3)	p50774[0] = r2091.3
4...15	Reserved	-

CU_ZSW1 (status word of the DO1 telegram (telegrams 39x))

See function diagram [2496].

Table 10-23 Description of CU_ZSW1 (status word of the CU)

Bit	Meaning	Interconnection parameter
0...2	Reserved	-
3	1 = Fault present. The active faults are stored in the fault buffer. 0 = No fault present. There are no faults in the fault buffer.	p2081[3] = r2139.3
4...6	Reserved	-
7	1 = Alarm present. The active alarms are stored in the alarm buffer. 0 = No alarm present. There are no alarms in the alarm buffer.	p2081[7] = r2139.7
8	1 = Synchronize system time.	p2081[8] = r0899.8
9	1 = No group alarm present.	p2081[9] = r3114.9
10	1 = No group fault present.	p2081[10] = r3114.10
11	Reserved, always "1"	-
12...15	Reserved	-

E_DIGITAL (digital inputs)

See function diagram [2498].

Table 10-24 Description of E_DIGITAL (digital inputs)

Bit	Meaning	Interconnection parameter [1)]
0	CUD digital input 4 (DI 4) [2)]	p2082[0] = r53010.8
1	CUD digital input 5 (DI 5) [2)]	p2082[1] = r53010.10
2	CUD digital input 6 (DI 6) [2)]	p2082[2] = r53010.12
3	CUD digital input 7 (DI 7) [2)]	p2082[3] = r53010.14
4...7	Reserved	-
8	CUD digital input 0 (DI 0)	p2082[8] = r53010.0
9	CUD digital input 1 (DI 1)	p2082[9] = r53010.2

Bit	Meaning	Interconnection parameter [1]
10	CUD digital input 2 (DI 2)	p2082[10] = r53010.4
11	CUD digital input 3 (DI 3)	p2082[11] = r53010.6
12...15	Reserved	-

[1] Default can be freely changed.

[2] Can be set via p50789[0...3] as digital input or digital output.

10.3.2.7 Diagnostics channels for cyclic communication

Alarms and faults can be transferred via two independent diagnostic channels DS0 and DS1. The information transferred is saved in parameters r0945[8] for faults and in r2122[8] for alarms. This allows the alarms and faults from a SINAMICS drive to be integrated into the system diagnostics of a higher-level controller and automatically displayed on an HMI. This function is certified for PROFINET and PROFIdrive.

The function is activated via the appropriate parameterization in the configuration tool being used, e.g. using HW Config or TIA Portal. The functionality is then transferred at the next power up to drive.

The messages of the diagnostic channels depend on the bus system being used for data transfer.

Table 10-25 Messages in relation to bus system

		PROFIdrive error classes		SINAMICS messages		
		Faults	Alarms	Faults	Alarms	Fault/alarm
PN	GSD	Yes	Yes	No	No	Is detected and localized
	TIA	Yes	Yes	Yes	Yes	Is detected and localized, allows problems to be directly resolved

- The alarms and faults correspond to the error classes defined in the PROFIdrive profile.
- You can select whether alarms and faults are transferred to a higher-level controller either as SINAMICS messages or using the error classes of the PROFIdrive profile.
- The alarms and faults can be mapped with standard resources (e.g. GSDML)

- The alarms or faults are logically and locally signaled:
  - With alarm or fault number
  - With assignment of the drive object, message value and hardware component assignment
  - In a user-friendly way with plain message texts
  - Display with user-defined names for drive objects and components
  - SINAMICS transfers the messages in the order that they have occurred
  - SINAMICS does not record any time stamps
  - The time stamps are generated from the higher-level controller when the messages are received
  - To transfer the SINAMICS messages, the extended channel diagnostics is used
- The existing mechanisms of TIA and S7 Classic can be used.
- The messages are compatible with PROFINET controllers.
- Alarms or faults are acknowledged using the already known acknowledgment routes.
- Transfer possible via interface IF1 and/or IF2

Note

Restriction in the case of shared device

If Shared device is activated, only one of the controllers can receive diagnoses.

Transmission in the case of cyclic communication

- For PROFINET, there is a unique assignment of the drive objects to the slots of the cyclic communication. The diagnostics is issued at the MAP/PAP-submodule.

Transmission in the case of acyclic communication

- There is no slot or subslot configured at which diagnostics can be issued.
- Faults or alarms that occur are routed along the BICO connections to the drive objects.

Display of error classes according to PROFIdrive

- For transfer with PROFINET, the PROFIdrive error class and the extended channel diagnostics.

10.3.3 Parallel operation of communication interfaces

The two cyclic interfaces for the setpoints and actual values differ by the parameter ranges used (BICO technology, etc.) and the functions that can be used. The interfaces are designated as cyclic interface 1 (IF1) and cyclic interface 2 (IF2).

Cyclic process data (setpoints / actual values) are processed using interfaces IF1 and IF2. The following interfaces are used:

- Onboard interfaces of the Control Unit for PROFIBUS DP
- An additional interface (COMM-BOARD) for PROFINET or Ethernet/IP (CBE20 Communication Board Ethernet) that can be inserted in the Control Unit as an option.

Parameter p8839 is used to set the parallel use of the Control Unit onboard interfaces and COMM-BOARD in the SINAMICS system. The functionality is assigned to interfaces IF1 and IF2 using indices.

For example, the following applications are possible:

- PROFIBUS DP for control and PROFINET to acquire actual values / measured values of the drive
- PROFIBUS DP for control and PROFINET for engineering only
- Mixed mode with two masters (the first for logic and coordination, and the second for technology)
- SINAMICS Link via IF1 (CBE20 Communication Board Ethernet); PROFIBUS (only DO drive, max. 16 PZD) IF2
- Operation of redundant communication interfaces

Assignment of communication interfaces to cyclic interfaces

The two cyclic interfaces for the setpoints and actual values differ by the parameter ranges used (BICO technology, etc.) and the functions that can be used. The interfaces are designated as cyclic interface 1 (IF1) and cyclic interface 2 (IF2).

With the factory setting p8839 = 99, the communication interfaces are permanently assigned one of the cyclic interfaces (IF1, IF2), depending on the communication system, e.g. PROFIBUS DP, PROFINET.

The assignment to the cyclic interfaces can essentially be freely defined by user parameterization for the parallel operation of the communication interfaces.

Properties of the cyclic interfaces IF1 and IF2

The following table shows the different features of the two cyclic interfaces:

Table 10-26 Properties of the cyclic interfaces IF1 and IF2

Feature	IF1	IF2
Setpoint (BICO signal source)	r2050, r2060	r8850, r8860
Actual value (BICO signal sink)	p2051, p2061	p8851, p8861
PROFIdrive conformance	Yes	No
PROFIdrive telegram selection (p0922)	Yes	No
Isochronous mode possible (p8815[0])	No	No
PROFIsafe possible (p8815[1])	No	No
Direct data exchange (PROFIBUS only)	Yes	Yes
List of drive objects (p0978)	Yes	Yes
Max. PZD (16-bit) setpoint / actual value DC_CTRL	64 / 64	64 / 64

Feature	IF1	IF2
Max. PZD (16-bit) setpoint / actual value encoder	4 / 12	4 / 12
Max. PZD (16-bit) setpoint / actual value TM31	5 / 5	5 / 5
Max. PZD (16-bit) setpoint / actual value TM15DI_DO	5 / 5	5 / 5
Max. PZD (16-bit) setpoint / actual value TM150	5 / 5	5 / 5
Max. PZD (16-bit) setpoint / actual value CU (device)	20 / 25	20 / 25

Table 10-27 Implicit assignment of hardware to cyclic interfaces for p8839[0] = p8839[1] = 99

Plugged hardware interface	IF1	IF2
No option, only use Control Unit onboard interface (PROFIBUS, PROFINET or USS)	Control Unit onboard	--
CUD with CBE20 Communication Board Ethernet	COMM BOARD	Control Unit onboard PROFIBUS or Control Unit onboard USS

Parameter p8839[0,1] is used to set the parallel operation of the hardware interfaces and the assignment to the cyclic interfaces IF1 and IF2 for the Control Unit drive object.

The object sequence for process data exchange via IF2 depends on the object sequence from IF1; see "List of drive objects" (p0978).

The factory setting of p8839[0.1] = 99 enables the implicit assignment (see previous table).

An alarm is generated in case of invalid or inconsistent parameterization of the assignment.

Parameters for IF2

The following parameters are available in order to optimize the IF2 for a PROFIBUS or PROFINET interface:

- Receive and send process data:
  r8850, p8851, r8853, r8860, p8861, r8863[1)]
- Diagnostic parameters:
  r8874, r8875, r8876[1)]
- Binector-connector converters:
  p8880, p8881, p8882, p8883, p8884, r8889[1)]
- Connector-binector converters:
  r8894, r8895, p8898, p8899[1)]

[1)] Significance of 88xx identical to 20xx

Note

Using the HW Config configuration tool, a PROFIBUS/PROFINET device with two interfaces cannot be shown. In parallel operation, this is the reason that SINAMICS appears twice in the project or in two projects, although physically it is just one device.

Parameter

p8839	PZD Interface hardware assignment
Description:	Assigning the hardware for cyclic communication via PZD interface 1 and interface 2.
Values:	0: Inactive
	1: Control Unit onboard
	2: COMM BOARD
	99: Automatic

For p8839, the following rules apply:

- The setting of p8839 applies for all drive objects of a Control Unit (device parameter).
- For the setting p8839[0] = 99 and p8839[1] = 99 (automatic assignment, factory setting), the hardware used is automatically assigned to interfaces IF1 and IF2. Both indices must be selected so that the automatic assignment is activated. If both indices are not selected, then an alarm is output and the setting p8839[x] = 99 is treated just like 'inactive'.
- An alarm is issued if the same hardware (Control Unit onboard or COMM-BOARD) is selected in p8839[0] and p8839[1]. Then the setting of p8839[0] is valid, and the setting of p8839[1] is treated as 'inactive'.
- If p8839[x] is set to 2, and the COMM-BOARD is missing/defective, then the corresponding interface is not automatically supplied from the Control Unit onboard interface. Message A08550 is output instead.

Overview of important parameters (see SINAMICS DCM List Manual)

- p0922 IF1 PROFIdrive PZD telegram selection
- p0978[0...24] List of drive objects
- p8815[0...1] IF1/IF2 PZD functionality selection
- p8839[0...1] PZD Interface hardware assignment

10.3.4 Acyclic communication

10.3.4.1 General information about acyclic communication

With acyclic communication, as opposed to cyclic communication, data transfer takes place only when an explicit request is made (e.g. in order to read and write parameters).

The "Read data record" and "Write data record" services are available for acyclic communication.

The following options are available for reading and writing parameters:

- S7 protocol
  This protocol uses the STARTER commissioning tool, for example, in online mode via PROFIBUS.
- PROFIdrive parameter channel with the following data sets:
  - PROFIBUS: Data block 47 (0x002F)
    The DPV1 services are available for master class 1 and class 2.
  - PROFINET: Data block 47 and 0xB02F al global access, data set 0xB02E as local access

Note

Please refer to the following documentation for a detailed description of acyclic communication:
Reference: PROFIdrive Profile V4.2, October 2015, Order No: 3.172

Note

Addressing

- PROFIBUS DP:
  The addressing is carried out via the logical address or the diagnostics address.
- PROFINET IO:
  The addressing is only undertaken using a diagnostics address which is assigned to a module as of slot 1. Parameters cannot be accessed via slot 0.

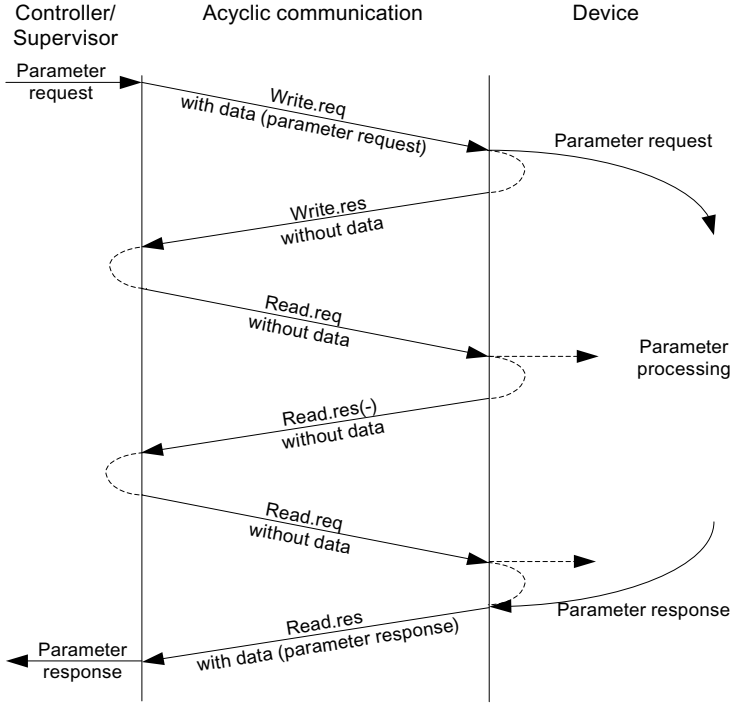

Figure 10-12 Reading and writing data

Properties of the parameter channel

- One 16-bit address exists for each parameter number and subindex.
- Concurrent access by several PROFIBUS masters (master class 2) or PROFINET IO supervisor (e.g. commissioning tool).
- Transfer of different parameters in one access (multiple parameter request).
- Transfer of complete arrays or part of an array possible.
- Only one parameter request is processed at a time (no pipelining).
- A parameter request/response must fit into a data set (max. 240 bytes).
- The request or the response header is user data.

10.3.4.2 Structure of requests and responses

Structure of parameter request and parameter response

Table 10-28 Parameter request

	Parameter request			**Offset**
Values for write access only	Request header	Request reference	Request ID	0
		Drive object No.	Number of parameters	2
	1st parameter address	Attribute	Number of elements	4
		Parameter number		6
		Subindex		8
	...			
	nth parameter address	Attribute	Number of elements	
		Parameter number		
		Subindex		
	1st parameter value(s)	Format	Number of values	
		Values		
		...		
	...			
	nth parameter value(s)	Format	Number of values	
		Values		
		...		

Table 10-29 Parameter response

	Parameter response			**Offset**
Values for read access only Error values for negative response only	Response header	Request reference mirrored	Response ID	0
		Axis mirrored	Number of parameters	2
	1st parameter value(s)	Format	Number of values	4
		Values or error values		6
		...		
	...			
	nth parameter value(s)	Format	Number of values	
		Values or error values		
		...		

Description of fields in DPV1 parameter request and response

Table 10-30 Fields

Field	**Data type**	**Values**	**Remark**
Request reference	Unsigned8	01 hex ... FF hex	
	Unique identification of the request/response pair for the master. The master changes the request reference with each new request. The device mirrors the request reference in its response.		
Request ID	Unsigned8	01 hex 02 hex	Read request Write request
	Specifies the type of request. In the case of a write request, the changes are made in a volatile memory (RAM). A save operation is needed in order to transfer the modified data to the non-volatile memory (p0971, p0977).		
Response ID	Unsigned8	01 hex 02 hex 81 hex 82 hex	Read request (+) Write request (+) Read request (-) Write request (-)
	Mirrors the request identifier and specifies whether request execution was positive or negative. Negative means: Cannot execute part or all of request. The error values are transferred instead of the values for each subresponse.		
Drive object number	Unsigned8	00 hex ... FF hex	Number
	Specification of the drive object number for a drive unit with more than one drive object. Different drive objects with separate parameter number ranges can be accessed over the same DPV1 connection.		
Number of parameters	Unsigned8	01 hex ... 27 hex	No. 1 ... 39 Limited by DPV1 telegram length
	Defines the number of adjoining areas for the parameter address and/or parameter value for multi-parameter requests. The number of parameters = 1 for single requests.		

Field	Data type	Values	Remark
Attribute	Unsigned8	10 hex 20 hex 30 hex	Value Description Text (not implemented)
	Type of parameter element accessed.		
Number of elements	Unsigned8	00 hex 01 hex ... 75 hex	Special function No. 1 ... 117 Limited by DPV1 telegram length
	Number of array elements accessed.		
Parameter number	Unsigned16	0001 hex ... FFFF hex	No. 1 ... 65535
	Addresses the parameter to be accessed.		
Subindex	Unsigned16	0000 hex ... FFFF hex	No. 0 ... 65535
	Addresses the first array element of the parameter to be accessed.		
Format	Unsigned8	02 hex 03 hex 04 hex 05 hex 06 hex 07 hex 08 hex other values	Data type integer8 Data type integer16 Data type integer32 Data type unsigned8 Data type unsigned16 Data type unsigned32 Data type floating point See PROFIdrive profile V3.1
		40 hex 41 hex 42 hex 43 hex 44 hex	Zero (without values as a positive subresponse to a write request) Byte Word Double word Error
	The format and number specify the adjoining space containing values in the telegram. For write access, it is preferable to specify data types according to the PROFIdrive profile. Bytes, words and double words are also possible as a substitute.		
Number of values	Unsigned8	00 hex ... EA hex	No. 0 ... 234 Limited by DPV1 telegram length
	Specifies the number of subsequent values.		
Error values	Unsigned16	0000 hex ... 00FF hex	Significance of the error values → refer to the following table "Error values in the DPV1 parameter responses"
	The error values in the event of a negative response. If the values make up an odd number of bytes, a zero byte is attached. This ensures the integrity of the word structure of the telegram.		
Values	Unsigned16	0000 hex ... 00FF hex	
	The values of the parameter for read or write access. If the values make up an odd number of bytes, a zero byte is attached. This ensures the integrity of the word structure of the telegram.		

Error values in DPV1 parameter responses

Table 10-31 Error values in DPV1 parameter responses

Error value	Meaning	Remark	Additional info
00 hex	Illegal parameter number.	Access to a parameter that does not exist.	–
01 hex	Parameter value cannot be changed.	Modification access to a parameter value that cannot be changed.	Subindex
02 hex	Lower or upper value limit exceeded.	Modification access with value outside value limits.	Subindex
03 hex	Invalid subindex.	Access to a subindex that does not exist.	Subindex
04 hex	No array.	Access with subindex to non-indexed parameter.	–
05 hex	Wrong data type.	Modification access with a value that does not match the data type of the parameter.	–
06 hex	Setting not allowed (only reset).	Modification access with a value not equal to 0 in a case where this is not allowed.	Subindex
07 hex	Description element cannot be changed.	Modification access to a description element that cannot be changed.	Subindex
09 hex	No description data available.	Access to a description that does not exist (the parameter value exists).	–
10 hex	Read request is not executed.	The read request is refused because know-how protection is active.	
0B hex	No operating priority.	Modification access with no operating priority.	–
0F hex	No text array exists.	Access to a text array that does not exist (the parameter value exists).	–
11 hex	Request cannot be executed due to operating status.	Access is temporarily not possible for unspecified reasons.	–
14 hex	Illegal value.	Modification access with a value that is within the limits but is illegal for other permanent reasons (parameter with defined individual values).	Subindex
15 hex	Response too long.	The length of the present response exceeds the maximum transfer length.	–
16 hex	Illegal parameter address.	Illegal or unsupported value for attribute, number of elements, parameter number, subindex or a combination of these.	–
17 hex	Illegal format.	Write request: Illegal or unsupported parameter data format.	–
18 hex	Number of values inconsistent.	Write request: A mismatch exists between the number of values in the parameter data and the number of elements in the parameter address.	–
19 hex	Drive object does not exist.	You have tried to access a drive object that does not exist.	–
20 hex	Parameter text cannot be changed.	–	–
21 hex	Service is not supported.	Illegal or unknown request ID	–
65 hex	Parameter presently deactivated.	You have tried to access a parameter that, although available, does not currently perform a function (e.g. n control set and access to a V/f control parameter).	–
6B hex	Write access for the enabled controller.	Write access is realized while the device is in the "Controller enable" state. Pay attention to the parameter attribute "changeable" in the SINAMICS DCM List Manual (C1, C2, U, T).	–

Error value	Meaning	Remark	Additional info
6C hex	Parameter %s [%s]: Unknown unit.	–	–
6D hex	Parameter %s [%s]: Write access only in the commissioning state, encoder (p0010 = 4).	–	–
6E hex	Parameter %s [%s]: Write access only in the commissioning state, motor (p0010 = 3).	–	–
6F hex	Parameter %s [%s]: Write access only in the commissioning state, power unit (p0010 = 2).	–	–
70 hex	Parameter %s [%s]: Write access only in the quick commissioning mode (p0010 = 1).	–	–
71 hex	Parameter %s [%s]: Write access only in the ready mode (p0010 = 0).	–	–
72 hex	Parameter %s [%s]: Write access only in the commissioning state, parameter reset (p0010 = 30).	–	–
73 hex	Parameter %s [%s]: Write access only in the commissioning state, Safety (p0010 = 95).	–	–
74 hex	Parameter %s [%s]: Write access only in the commissioning state, tech. application/units (p0010 = 5).	–	–
75 hex	Parameter %s [%s]: Write access only in the commissioning state (p0010 not equal to 0).	–	–
76 hex	Parameter %s [%s]: Write access only in the commissioning state, download (p0010 = 29).	–	–
77 hex	Parameter %s [%s] must not be written during download.	–	–
78 hex	Parameter %s [%s]: Write access only in the commissioning state, drive configuration (device: p0009 = 3).	–	–
79 hex	Parameter %s [%s]: Write access only in the commissioning state, define drive type (device: p0009 = 2).	–	–
7A hex	Parameter %s [%s]: Write access only in the commissioning state, data record base configuration (device: p0009 = 4).	–	–
7B hex	Parameter %s [%s]: Write access only in the commissioning state, device configuration (device: p0009 = 1).	–	–
7C hex	Parameter %s [%s]: Write access only in the commissioning state, device download (device: p0009 = 29).	–	–

Error value	Meaning	Remark	Additional info
7D hex	Parameter %s [%s]: Write access only in the commissioning state, device parameter reset (device: p0009 = 30).	–	–
7E hex	Parameter %s [%s]: Write access only in the commissioning state, device ready (device: p0009 = 0).	–	–
7F hex	Parameter %s [%s]: Write access only in the commissioning state, device (device: p0009 not equal to 0).	–	–
81 hex	Parameter %s [%s] must not be written during download.	–	–
82 hex	Transfer of master control is blocked by BI: p0806.	–	–
83 hex	Parameter %s [%s]: Requested BICO interconnection not possible.	The BICO output does not supply a float value. However, the BICO input requires a float value.	–
84 hex	Parameter %s [%s]: Parameter change inhibited (refer to p0300, p0400, p0922)	–	–
85 hex	Parameter %s [%s]: Access method not defined.	–	–
87 hex	Write request is not executed.	The write request is rejected because know-how protection is active.	–
C8 hex	Below currently valid limit.	Modification request for a value that, although within "absolute" limits, is below the currently valid lower limit.	–
C9 hex	Above currently valid limit.	Modification request for a value that, although within "absolute" limits, is below the currently valid lower limit (e.g. governed by the current converter rating).	–
CC hex	Write access not permitted.	Write access is not permitted because an access code is not available.	–

10.3.4.3 Determining the drive object numbers

Further information about the drive system (e.g. drive object numbers) can be determined as follows using parameters p0101, r0102, and p0107/r0107:

1. The value of parameter r0102 ("Number of drive objects") for drive object/axis 1 is read via a read request.
   Drive object 1 is the Control Unit (CU) which is a minimum requirement for each drive system.
2. Depending on the result of the initial read request, further read requests for drive object 1 are used to read the indices for parameter p0101 ("Drive object numbers"), as specified by parameter r0102.
   Example:
   If the number of drive objects is "5", the values of indices 0 to 4 of parameter p0101 are read.
   Of course, the relevant indexes can also be read at once.

   Note

   The first two points provide you with the following information:
   - The number of drive objects that exist in the drive system
   - The numbers of the existing drive objects
3. Following this, parameter r0107/p0107 ("Drive object type") is read for each drive object (indicated by the drive object number).
   Depending on the drive object, parameter 107 can be either an adjustable parameter or a display parameter.
   The value in parameter r0107/p0107 indicates the drive object type. The coding for the drive object type is specified in the parameter list.
4. As of here, the list of parameters applies to the particular drive object.

10.3.4.4 Example 1: Read parameter

Requirements

- The PROFIdrive controller has been commissioned and is fully operational.
- PROFIdrive communication between the controller and the device is operational.
- The controller can read and write data sets in conformance with PROFIdrive DPV1.

Task description

After at least one fault occurs (ZSW1.3 = "1") at drive object 2, the active fault codes must be read from the fault buffer r0945[0] ... r0945[7].

The request is to be handled using a request and response data block.

Basic procedure

1. Create a request to read the parameters.
2. Invoke the request.
3. Evaluate the response.

Create the request

Parameter request			**Offset**
Request header	Request reference = 25 hex	Request ID = 01 hex	0 + 1
	Drive object No. = 02 hex	Number of parameters = 01 hex	2 + 3
Parameter address	Attribute = 10 hex	Number of elements = 08 hex	4 + 5
	Parameter no. = 945 dec		6
	Subindex = 0 dec		8

Information about the parameter request:

- Request reference:
  The value is selected at random from the valid value range. The request reference establishes the relationship between request and response.
- Request ID:
  01 hex → This identifier is required for a read request.
- Drive object No.:
  02 hex → Drive 2, fault buffer with drive- and device-specific faults
- Number of parameters:
  01 hex → One parameter is read.
- Attribute:
  10 hex → The parameter values are read.
- Number of elements:
  08 hex → The actual fault incident with eight faults is to be read.
- Parameter number:
  945 dec → p0945 (fault code) is read.
- Subindex:
  0 dec → Reading starts at index 0.

Initiate parameter request

If ZSW1.3 = "1" → Initiate parameter request.

Evaluate parameter response

Parameter response			Offset
Response header	Request reference mirrored = 25 hex	Response ID = 01 hex	0 + 1
	Drive object No. mirrored = 02 hex	Number of parameters = 01 hex	2 + 3
Parameter value	Format = 06 hex	Number of values = 08 hex	4 + 5
	1st value = 1355 dec		6
	2nd value = 0 dec		8
	...		...
	8th value = 0 dec		20

Information about the parameter response:

- Request reference mirrored:
  This response belongs to the request with request reference 25.
- Response ID:
  01 hex → Read request positive, values stored as of 1st value.
- Drive object No. mirrored, number of parameters:
  The values correspond to the values from the request.
- Format:
  06 hex → Parameter values are in the unsigned16 format.
- Number of values:
  08 hex → Eight parameter values are available.
- 1st value ... 8th value
  A fault is only entered in value 1 of the fault buffer for drive 2.

10.3.4.5 Example 2: Writing to parameters (multi-parameter request)

Requirements

- The PROFIdrive controller has been commissioned and is fully operational.
- PROFIdrive communication between the controller and the device is operational.
- The controller can read and write data sets in conformance with PROFIdrive DPV1.

Task description

Jog 1 and 2 are to be set up via the input terminals of the CUD. A parameter request is to be used to write the corresponding parameters as follows:

- BI: p1055 = r53010.0 — Jog bit 0
- BI: p1056 = r53010.6 — Jog bit 1
- p50436[0] = 5% — Jog 1 speed setpoint
- p50436[1] = 10 % — Jog 2 speed setpoint

The request is to be handled using a request and response data block.

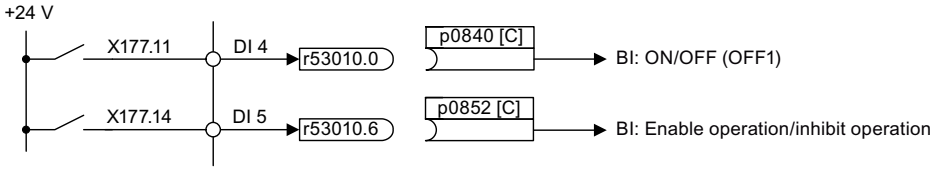

Figure 10-13 Task description for multi-parameter request (example)

To establish BICO interconnections, target parameters (p0840, p0852) are given a reference to the source parameters (r53010.0, r53010.6):

Source parameter number	Drive object number	Index number	Parameter value (DINT) for BICO interconnection
r53010	2 (in the example, DC_CTRL)	0	CF12 0800 hex
r53010	2 (in the example, DC_CTRL)	6	CF12 0806 hex
DINT			
Bits 31 ... 16	Bits 15 ... 10	Bits 9 ... 0	

A drive object can be interconnected with itself using drive object No. 63. More detailed information is provided in the following Chapter: "BICO technology: Interconnecting signals (Page 335)".

Basic procedure

1. Create a request to write the parameters.
2. Invoke the request.
3. Evaluate the response.

1. Creating a request

Table 10-32 Parameter request

Parameter request			Offset
Request header	Request reference = 40 hex	Request ID = 02 hex	0 + 1
	Drive object No. = 02 hex	Number of parameters = 04 hex	2 + 3
1st parameter address	Attribute = 10 hex	Number of elements = 01 hex	4 + 5
	Parameter no. = 1055 dec		6
	Subindex = 0 dec		8
2nd parameter address	Attribute = 10 hex	Number of elements = 01 hex	10 + 11
	Parameter no. = 1056 dec		12
	Subindex = 0 dec		14
3rd parameter address	Attribute = 10 hex	Number of elements = 01 hex	16 + 17
	Parameter no. = 53436 dec		18
	Subindex = 0 dec		20

Parameter request			Offset
4th parameter address	Attribute = 10 hex	Number of elements = 01 hex	22 + 23
	Parameter number = 50436 dec		24
	Subindex = 1 dec		26
1st parameter value(s)	Format = 07 hex	Number of values = 01 hex	28 + 29
	Value = CF12 hex		30
	Value = 0800 hex		32
2nd parameter value(s)	Format = 07 hex	Number of values = 01 hex	34 + 35
	Value = CF12 hex		36
	Value = 0806 hex		38
3rd parameter value(s)	Format = 08 hex	Number of values = 01 hex	40 + 41
	Value = 40A0 hex		42
	Value = 0000 hex		44
4th parameter value(s)	Format = 08 hex	Number of values = 01 hex	46 + 47
	Value = 4120 hex		48
	Value = 0000 hex		50

Information about the parameter request:

- Request reference:
  The value is selected at random from the valid value range. The request reference establishes the relationship between request and response.
- Request ID:
  02 hex → This identifier is required for a write request.
- Drive object No.:
  02 hex → The parameters are written to drive 2.
- Number of parameters
  04 hex → The multi-parameter request comprises four individual parameter requests.

1st parameter address ... 4. Parameter address

- Attribute:
  10 hex → The parameter values are to be written.
- Number of elements
  01 hex → One array element is written.
- Parameter number
  Specifies the number of the parameter to be written (p1055, p1056, p50436).
- Subindex:
  0 dec → ID of the first array element.

1st parameter value ... 4th parameter value

- Format:
  07 hex → Data type, unsigned32
  08 hex → Data type, floating point
- Number of values:
  01 hex → A value is written to each parameter in the specified format.
- Value:
  BICO input parameter: Enter signal source
  Adjustable parameter: Enter value

2. Initiating the parameter request

3. Evaluating the parameter response

Parameter response			**Offset**
Response header	Request reference mirrored = 40 hex	Response ID = 02 hex	0
	Drive object No. mirrored = 02 hex	Number of parameters = 04 hex	2

Information about the parameter response

- Request reference mirrored:
  This response belongs to the request with request reference 40.
- Response ID:
  02 hex → Write request positive
- Drive object No. mirrored:
  02 hex → The value matches the value from the request.
- Number of parameters:
  04 hex → The value matches the value from the request.

10.4 Communication via PROFIBUS DP

10.4.1 PROFIBUS connection



⚠ WARNING

Electric shock during connection while voltage is present

When connecting the PROFIBUS cable while voltage is present, there is a danger of coming into contact with live components behind the terminal.

Touching live components can result in death or serious injury.

- Only connect the PROFIBUS cable to connector X126 when the device is in a no-voltage condition.

Position of PROFIBUS connection and diagnostics LEDs

The PROFIBUS connection and diagnostics LEDs are located on the Control Unit (CUD).

The PROFIBUS connection is via a 9-pin Sub-D socket X126. The connections are electrically isolated.

See also Figure 6-31 Terminal/connector arrangement on the "Control Unit (CUD)" (Page 129) and Chapter “Description of the LEDs on the CUD (Page 609)”.

Table 10-33 PROFIBUS connector assignment

Connector X126	Pin	Signal name	Technical specifications
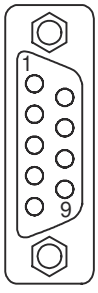	1	-	Not assigned
	2	-	Not assigned
	3	RxD/TxD-P	RS485 receive/transmit data P (B)
	4	CNTR-P	Control signal (TTL)
	5	DGND	PROFIBUS data ground
	6	VP	Positive supply voltage (5 V +/-10%)
	7	-	Not assigned
	8	RxD/TxD-N	RS485 receive/transmit data N (A)
	9	-	Not assigned
"Control Unit (CUD)" module			

Bus connector

The cables must be connected using PROFIBUS bus connectors as these contain the necessary bus terminating resistors.

Suitable PROFIBUS bus connector: Article No. 6GK1500-0FC10

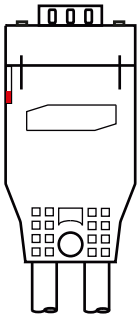

Figure 10-14 PROFIBUS bus connector

Bus terminating resistor

The bus terminating resistor must be switched on or off depending on its position in the bus, otherwise the data will not be transmitted properly.

Principle: The terminating resistors must only be switched on at both ends of the bus line; the resistors must be switched off at all other connectors.

The cable shield must be connected at both ends and over a large surface area.

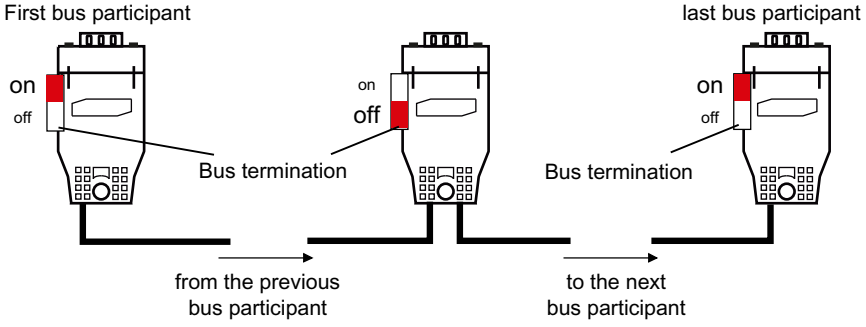

Figure 10-15 Position of the bus terminating resistors

10.4.2 General information about PROFIBUS

10.4.2.1 General information about PROFIBUS for SINAMICS

PROFIBUS is an open international fieldbus standard for a wide range of production and process automation applications.

The following standards ensure open, multi-vendor systems:

- International standard EN 50170
- International standard IEC 61158

PROFIBUS is optimized for high-speed, time-critical data communication at field level.

Note

PROFIBUS for drive technology is standardized and described in the following document:

PROFIdrive Profile Drive Technology

PROFIBUS User Organization e. V.
Haid-und-Neu-Straße 7, D-76131 Karlsruhe, Germany
http://www.profibus.com

NOTICE
Destruction of the CAN bus nodes No CAN cables must be connected to interface X126. If CAN cables are connected, the CUD and other CAN bus nodes may be destroyed.

Master and device

- Master and device properties

Properties	**Master**	Device
As bus node	Active	Passive
Send messages	Permitted without external request	Only possible on request by master
Receive messages	Possible without any restrictions	Only receive and acknowledge permitted

- Master
  Masters are categorized into the following classes:
  - Master class 1 (DPMC1):
    Central automation stations that exchange data with the devices in cyclic and acyclic mode. Communication between the masters is also possible.
    Examples: SIMATIC S7, SIMOTION
  - Master class 2 (DPMC2):
    Devices for configuration, commissioning, operator control and monitoring during bus operation. Devices that only exchange data with the devices in acyclic mode.
    Examples: Programming devices, human machine interfaces
- Devices
  With respect to PROFIBUS, the SINAMICS drive unit is a device.

Bus access method

PROFIBUS uses the token passing method, i.e. the active stations (masters) are arranged in a logical ring in which the authorization to send is received within a defined time frame.

Within this time frame, the master with authorization to send can communicate with other masters or handle communication with the assigned devices in a master/device procedure.

PROFIBUS telegram for cyclic data transmission and acyclic services

Each drive unit that supports cyclic process data exchange uses a telegram to send and receive all the process data. A separate telegram is sent in order to perform all the acyclic services (read/write parameters) under a single PROFIBUS address. The acyclic data is transferred with a lower priority after cyclic data transmission.

The overall length of the telegram increases with the number of drive objects that are involved in exchanging process data.

Sequence of drive objects in the telegram

On the drive side, the sequence of drive objects in the telegram is displayed via a list in p0978[0...24] where it can also be changed.

You can use the STARTER commissioning tool to display the sequence of drive objects for a commissioned drive system in online mode in the project navigator under "Drive unit" **>** "Communication" > "Telegram configuration".

When you create the configuration on the controller side (e.g. HW Config), the process-data-capable drive objects for the application are added to the telegram in this sequence.

The following drive objects can exchange process data:

- Control Unit (CU_DC)
- Terminal Module 15 (TM15)
- Terminal Module 31 (TM31)
- Terminal Module 150 (TM150)
- DC drive control (DC_CTRL)

Note

The sequence of drive objects in HW Config must be the same as that in the drive (p0978).

The structure of the telegram depends on the drive objects taken into account during configuration. Configurations are permitted that do not take into account all of the drive objects that are present in the drive system.

Example:

The following configurations, for example, are possible:

- Configuration with CU_DC, DC_CTRL
- Configuration with DC_CTRL, TM31, TM31
- etc.

10.4.2.2 Example of a telegram structure for cyclic data acquisition

Task

The drive system comprises the following drive objects:

SINAMICS DCM with the objects

- CU_DC
- DC_CTRL

Configuration settings (e.g. HW Config for SIMATIC S7)

The components are mapped to objects for configuration.

Due to the telegram structure shown, the objects in the "DP slave properties" overview must be configured as follows:

- CU_DC Standard telegram 390
- DC_CTRL Standard telegram 352

DP slave properties – overview - Drive-ES / STARTER

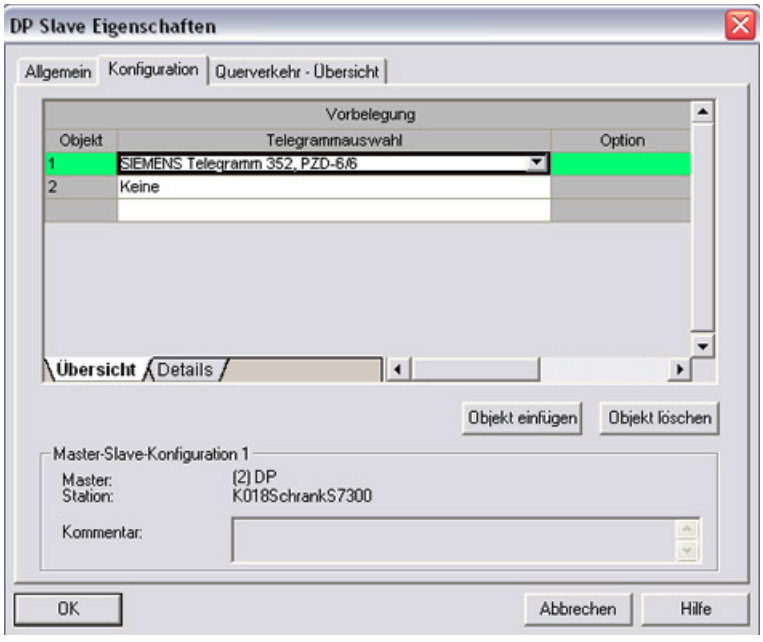

Figure 10-16 Slave properties - overview

When you click "Details", the properties of the configured telegram structure are displayed (e.g. I/O addresses, axis separator).

DP slave properties – details

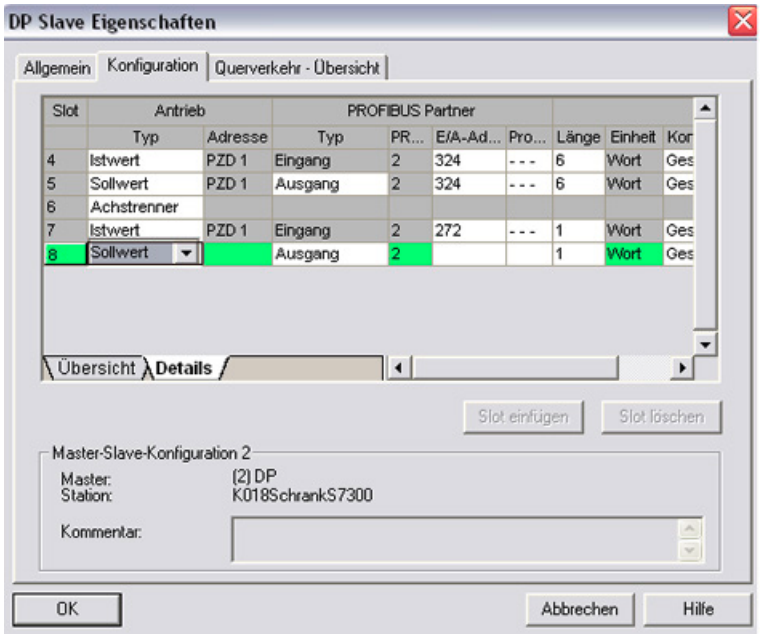

Figure 10-17 Slave properties - details

The axis separator separates the objects in the telegram as follows:

- Slot 4 and 5: Object 2 → DC_CTRL
- Slot 7 and 8: Object 1 → CU_DC

10.4.3 Commissioning PROFIBUS

10.4.3.1 Setting the PROFIBUS interface

Interfaces and diagnostic LED

See Chapter "PROFIBUS connection (Page 427)".

Note

A teleservice adapter can be connected to the PROFIBUS interface (X126) for remote diagnostics purposes.

Setting the PROFIBUS address

The PROFIBUS address is set at parameter p0918.

The factory setting is

- For the left CUD: 126
- For the right CUD: 125

Each PROFIBUS address in a PROFIBUS line can only be assigned once. When several Control Units are connected to a PROFIBUS line, you set the addresses differently than the factory setting.

The PROFIBUS address can be changed

- Using the BOP20 (only possible on the left CUD)
- Using the AOP30 (if available)
- Using STARTER

You must switch to DO 1 (CU) to change the bus address using the BOP. Access level p0003 = 3 is required to change p0918.

When using the STARTER commissioning tool, make sure that the bus address p0918 in the offline project matches the online value. If this is not the case, the value is overwritten at the next upload or download.

The PROFIBUS address must be saved in a non-volatile way using the "Copy RAM to ROM" function.

The change made to the bus address takes effect after POWER ON.

10.4.3.2 PROFIBUS interface during operation

Generic station description file

A generic station description file clearly and completely defines the properties of a PROFIBUS device.

The GSD files can be found:

- On the Internet. For the link, see "Preface (Page 3)"
- On the memory card in the directory \\SIEMENS\SINAMICS\DATA\CFG\.
  - Universal module
  - Axis separator
  - Standard telegram1, PZD-2/2
  - Standard telegram20, PZD-2/6
  - SIEMENS telegram 220, PZD-10/10
  - SIEMENS telegram 352, PZD-6/6
  - Free telegram, PZD-4/4
  - Free telegram, PZD-8/8
  - Free telegram, PZD-16/16
  - Free telegram, PZD-32/32
  - Free telegram, PZD-64/64
  - Device-to-device, PZD-1
  - Device-to-device, PZD-2
  - Device-to-device, PZD-4
  - Device-to-device, PZD-8

The GSD file also includes standard telegrams, free telegrams and device-to-device telegrams for configuring direct data exchange. With the aid of these telegram parts and an axis separator, a telegram for the drive unit must be composed for each drive object.

Processing a GSD file in HW Config is included in the SIMATIC documentation. Suppliers of PROFIBUS components can provide their own bus configuration tool. The description of the respective bus configuration tool is described in the relevant documentation.

Note for commissioning for VIK-NAMUR

To be able to operate a SINAMICS drive as a VIK-NAMUR drive, standard telegram 20 must be set and the VIK-NAMUR identification number activated via p2042 =1.

Device identification

Identification for individual devices facilitates diagnostics and provides an overview of the nodes on the PROFIBUS.

The information for each device is stored in the following CU-specific parameter:
r0964[0...6] device identification

Bus terminating resistor and shielding

Reliable data transmission via PROFIBUS depends, amongst other things, on the setting of the bus terminating resistors and the shielding of the PROFIBUS cables.

- Bus terminating resistor
  The bus terminating resistors in the PROFIBUS plugs must be set as follows:
  - First and last nodes in the line: Switch on terminating resistor
  - Other nodes in the line: Switch off terminating resistor
- Shielding of the PROFIBUS cables
  The cable shield must be connected in the plug through a large surface area at both ends. See also Chapter "PROFIBUS connection (Page 427)".

10.4.3.3 Commissioning PROFIBUS

Preconditions and assumptions for commissioning

PROFIBUS device

- The PROFIBUS address to be set for the application is known.
- The telegram type for each drive object is known by the application.

PROFIBUS master

- The communication properties of the SINAMICS DCM device must be available in the master (GSD file or Drive ES device OM).

Commissioning steps (example with SIMATIC S7)

1. Set the PROFIBUS address on the device.
2. Set the telegram type on the device.
3. Perform the following in the HW Config:
   - Connect the drive unit to PROFIBUS and assign the address.
   - Set the telegram type.
     The same telegram type as on the device should be set for every drive object exchanging process data via PROFIBUS.
     The master can send more process data than the device uses. A telegram with a larger PZD number than is assigned for the drive object STARTER can be configured on the master. The PZDs not supplied by the drive object are filled with zeros.
     The setting "without PZD" can be defined on a node or object (e.g. infeed controlled via terminals).
4. Assign the I/O addresses according to the user program.

10.4.3.4 Diagnostics options

The standard device diagnostics can be read online in the HW Config.

10.4.3.5 SIMATIC HMI addressing

You can use a SIMATIC HMI as a PROFIBUS master (master class 2) to access SINAMICS directly. With respect to SIMATIC HMI, SINAMICS behaves like a SIMATIC S7. For accessing drive parameters, the following simple rule applies:

- Parameter number = data block number
- Parameter sub-index = bit 0 ... 9 of data block offset
- Drive object number = bit 10 ... 15 of data block offset

Pro Tool and WinCC flexible

The SIMATIC HMI can be configured flexibly with "Pro Tool" or "WinCC flexible".

The following specific settings for drives must be observed when configuration is carried out with Pro Tool or WinCC flexible.

Controllers: Protocol always "SIMATIC S7 - 300/400"

Table 10-34 Additional parameters

Field	Value
Network parameter profile	DP
Network parameter baud rate	Any
Communication partner address	PROFIBUS address of the drive unit
Communication partner slot/rack	don't care, 0

Table 10-35 Variables: "General" tab

Field	Value
Name	Any
Control system	Any
Type	Depending on the addressed parameter value, e.g.: INT: for integer 16 DINT: for integer 32 WORD: for unsigned 16 REAL: for float
Area	DB
DB (data block number)	Parameter number 1 ... 65535
DBB, DBW, DBD (data block offset)	Drive object No. and sub-index bit 15 ... 10: Drive object No. 0 ... 63 bit 9 ... 0: Sub-index 0 ... 1023 or expressed differently DBW = 1024 * drive object No. + sub-index
Length	Not activated
Acquisition cycle	Any

Field	Value
Number of elements	1
Decimal places	Any

Note

- You can operate a SIMATIC HMI together with a drive unit independently of an existing controller.
  A basic "point-to-point" connection can only be established between two nodes (devices).
- The "variable" HMI functions can be used for drive units. Other functions cannot be used (e.g. "messages" or "recipes").
- Individual parameter values can be accessed. Entire arrays, descriptions, or texts cannot be accessed.

10.4.3.6 Monitoring telegram failure

When monitoring telegram failure, SINAMICS differentiates between two cases:

- Telegram failure with a bus fault
  After a telegram failure, and the additional monitoring time has elapsed (p2047), bit r2043.0 is set to "1" and alarm A01920 is output. Binector output r2043.0 can be used for a quick stop, for example.
  Once the delay time p2044 has elapsed, fault F01910 is output. Fault F01910 triggers fault response OFF3 (quick stop) on the DO DC_CTRL. If no OFF response is to be triggered, the fault response can be reparameterized accordingly.
  Fault F01910 can be acknowledged immediately. The drive can then be operated even without PROFIdrive.

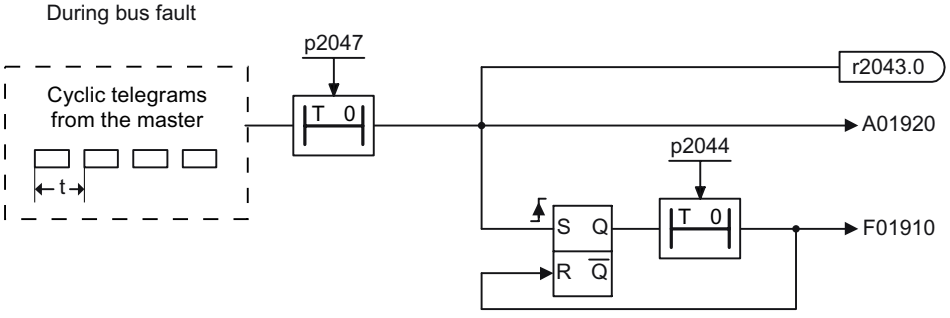

Figure 10-18 Monitoring of telegram failure with a bus fault

- Telegram failure with a CPU stop
  After telegram failure, bit r2043.0 is set to "1". Binector output r2043.0 can be used for a quick stop, for example.
  Once the delay time p2044 has elapsed, fault F01910 is output. Fault F01910 triggers fault response OFF3 (quick stop) on the DO DC_CTRL. If no OFF response is to be triggered, the fault response can be reparameterized accordingly.
  Fault F01910 can be acknowledged immediately. The drive can then be operated even without PROFIdrive.

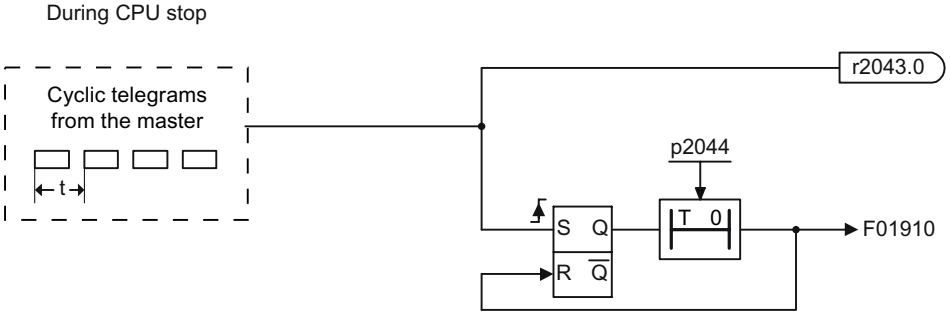

Figure 10-19 Monitoring telegram failure for a CPU stop

Example: Quick stop at telegram failure

Settings:

- CU p2047 = 20 ms
- DC_CTRL p2044 = 0 s

Sequence:

1. Following a telegram failure, and once the additional monitoring time (p2047) has elapsed, binector output r2043.0 of drive object CU switches to "1".
   Alarm A01920 and fault F01910 are output at the same time for the DC_CTRL drive objects.
2. When F01910 is output, an OFF3 is triggered for the drive.

Note

The additional monitoring time p2047 is only useful for cyclic communication.

10.4.4 Direct data exchange

For PROFIBUS DP, the master interrogates all of the devices one after the other in a DP cycle. In this case, the master transfers its output data (setpoints) to the particular device and receives as response the input data (actual values). Fast, distributed data transfer between drives (devices) is possible using the "direct data exchange" function without direct involvement from the master.

The following terms are used for the function described in this chapter:

- Direct data communication
- Data Exchange Broadcast (DXB.req)
- Direct data exchange (is used in the following)

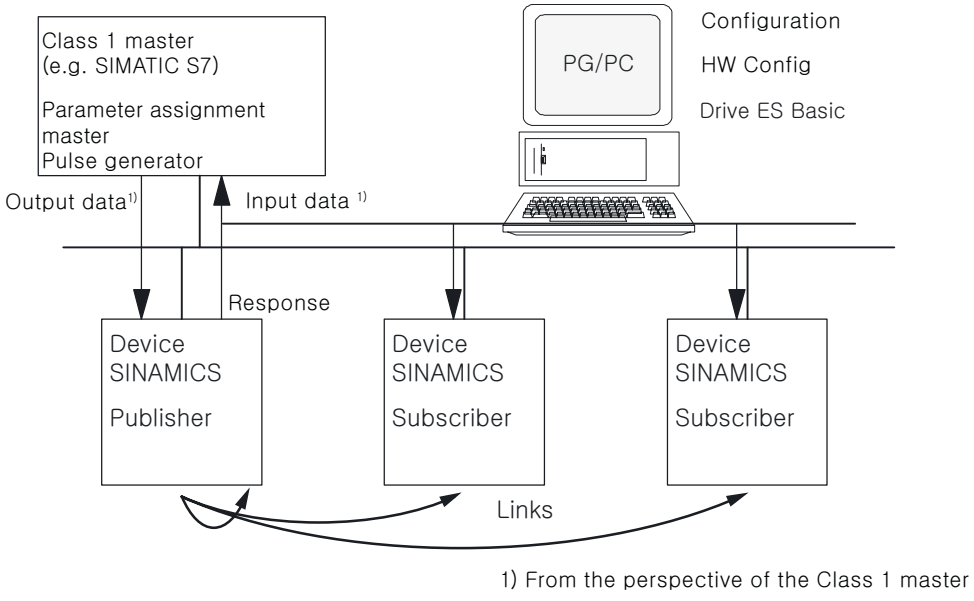

Figure 10-20 Direct data exchange with the publisher-subscriber model

Publisher

With the "direct data exchange" function, at least one device must act as the publisher.

The publisher is addressed by the master when the output data is transferred with a modified layer 2 function code (DXB.req). The publisher then sends its input data for the master with a broadcast telegram to all bus nodes.

Subscriber

The subscribers evaluate the broadcast telegrams, sent from the publishers, and use the data which has been received as setpoints. These setpoints of the publisher are used, in addition to the setpoints received from the master, corresponding to the configured telegram structure (p0922).

Links and taps

The links configured in the subscriber (connections to publisher) contain the following information:

- From which publisher is the input data received?
- What is the content of the input data?
- Where are the additional setpoints received?

Several taps are possible within a link. Several input data or input data areas, which are not associated with one another, can be used as setpoint via a tap.

Links are possible on the drive unit itself. This internal link corresponds, as far as the timing is concerned, to a link via PROFIBUS.

Requirements

The following requirements should be observed for the "direct data exchange" function:

- STARTER as of Version 4.2
- Configuration:
  - Drive ES Basic, Drive ES SIMATIC or Drive ES PCS7 as of Version 5.3 SP3
  - Alternatively using a GSD file
- Firmware as of Version 1.2
- The maximum number of process data per drive can be identified from the value in r2050 – minus the resources that have already been used
- A maximum of 16 links to publishers

Applications

For example, the following applications can be implemented using the "direct data exchange" function:

- Axis couplings
- Specifying binector connections from another device

10.4.4.1 Setpoint assignment in the subscriber

Information about setpoints

- Number of setpoint
  When bus communication is being established, the master signals the device the number of setpoints (process data) to be transferred using the configuring telegram (ChkCfg).
- Contents of the setpoints
  The structure and contents of the data are determined using the local process data configuration for the "SINAMICS device".
- Operation as "standard" device
  The drive unit (device) only receives its setpoints as output data from the master.
- Operation as subscriber
  When a device is operated as a subscriber, some of the setpoints are defined by one or more publishers rather than by the master.
  The device is informed of the assignment via the parameterization and configuration telegram when bus communication is being established.

10.4.4.2 Activating/parameterizing direct data exchange

The "direct data exchange" function must be activated in the publishers as well as in the subscribers, whereby only the subscriber is to be configured. The publisher is automatically activated during bus startup.

Activation in the publisher

The master is informed abut which devices are to be addressed as publishers with a modified layer 2 function code (DXB req) via the configuration of the subscriber links.

The publisher then sends its input data not only to the master but also as a broadcast telegram to all bus nodes.

These settings are made automatically using the bus configuration tool (e.g. HW Config).

Activation in the subscriber

The device, which is to be used as subscriber, requires a filter table. The device must know which setpoints are received from the master and which are received from a publisher.

The filter table is created automatically via the bus configuration tool (e.g. HW Config).

The following diagram shows the information contained in the filter table.

Parameterizing telegram (SetPrm)

The filter table is transferred, as a dedicated block from the master to the device with the parameterizing telegram when a bus communication is established.

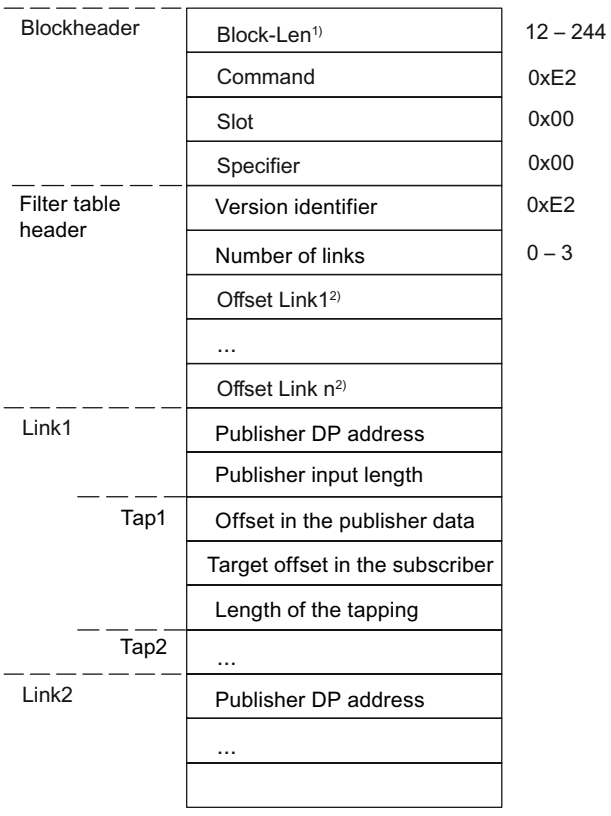

1) Specified in bytes
2) Calculated as of version identifier

Figure 10-21 Filter block in the parameterizing telegram (SetPrm)

Configuration telegram (ChkCfg)

Using the configuration telegram, a device knows how many setpoints are to be received from the master and how many actual values are to be sent to the master.

For direct data exchange, a special space ID is required for each tap. The PROFIBUS configuration tool (e.g. HW Config) generates this ID. The ID is then transferred with the ChkCfg into the drive devices that operate as subscribers.

10.4.4.3 Commissioning of the PROFIBUS direct data exchange

The commissioning of direct data exchange between two SINAMICS drives using the additional Drive ES Basic package is described below.

Settings in HW Config

The project below is used to describe the settings in HW Config.

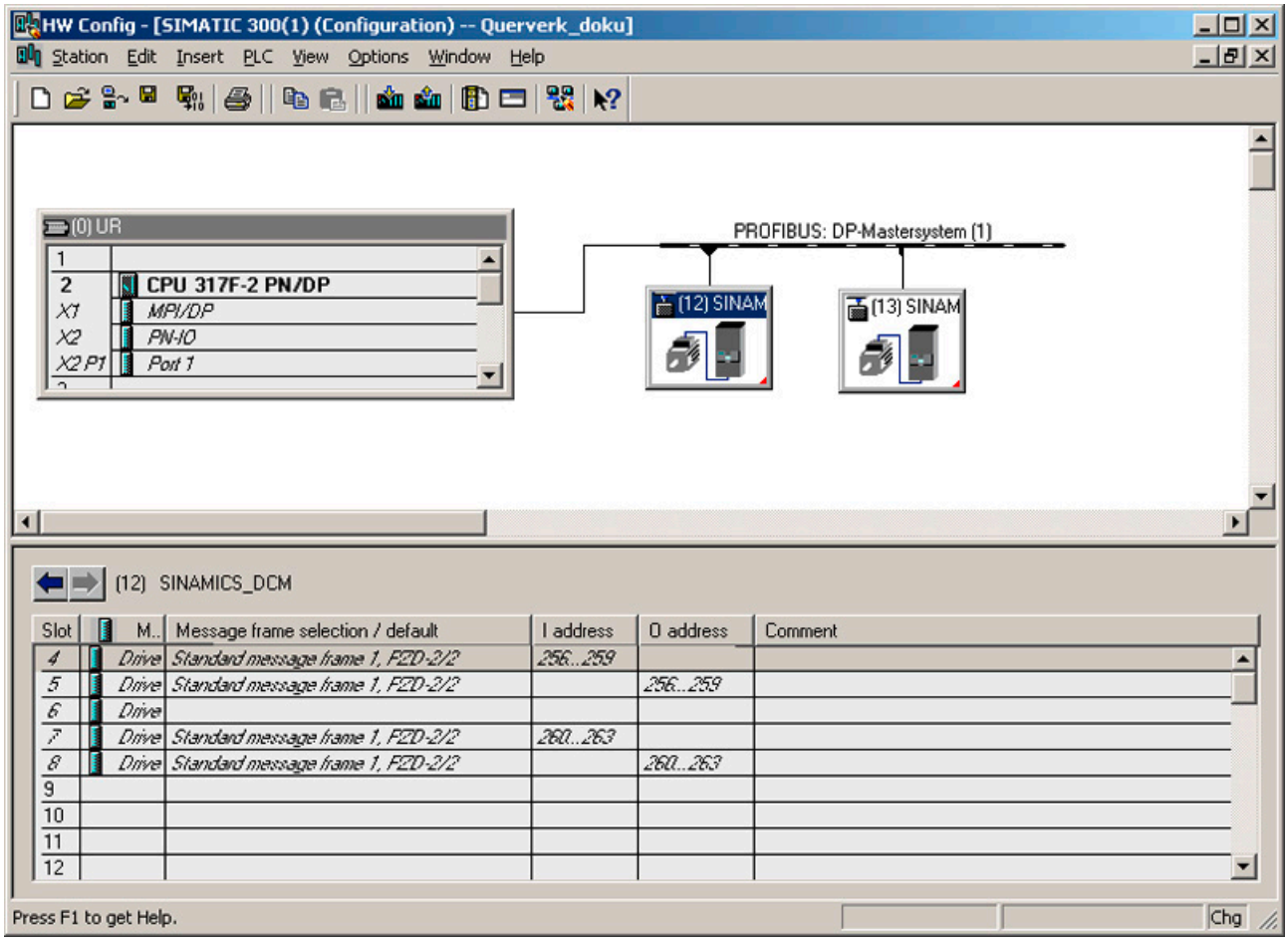

Figure 10-22 Example project of a PROFIBUS network in HW Config

Procedure

1. Select a device (e.g. SINAMICS DCM) and use its properties to configure the telegram for the connected drive object.
2. In the "Configuration" tab of the drive unit, select e.g. the standard telegram 1 for the associated drive in the telegram selection.

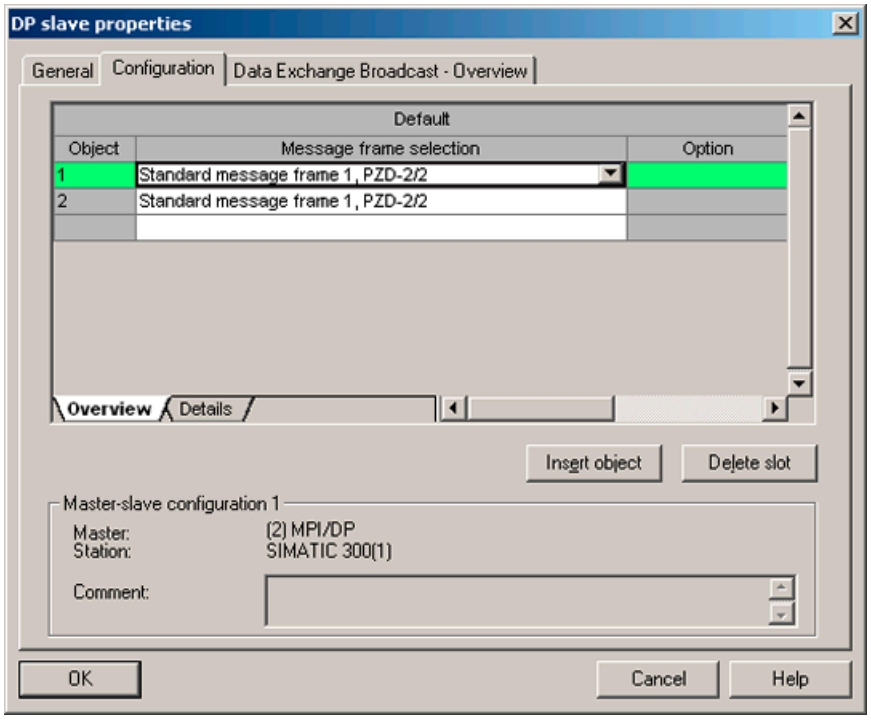

Figure 10-23 Telegram selection for drive object

3. Then go to the detail view.
   Slots 4/5 contain the actual value / setpoint for the drive object.
   Slots 7/8 are the telegram portions for the actual value / setpoint of the CU.

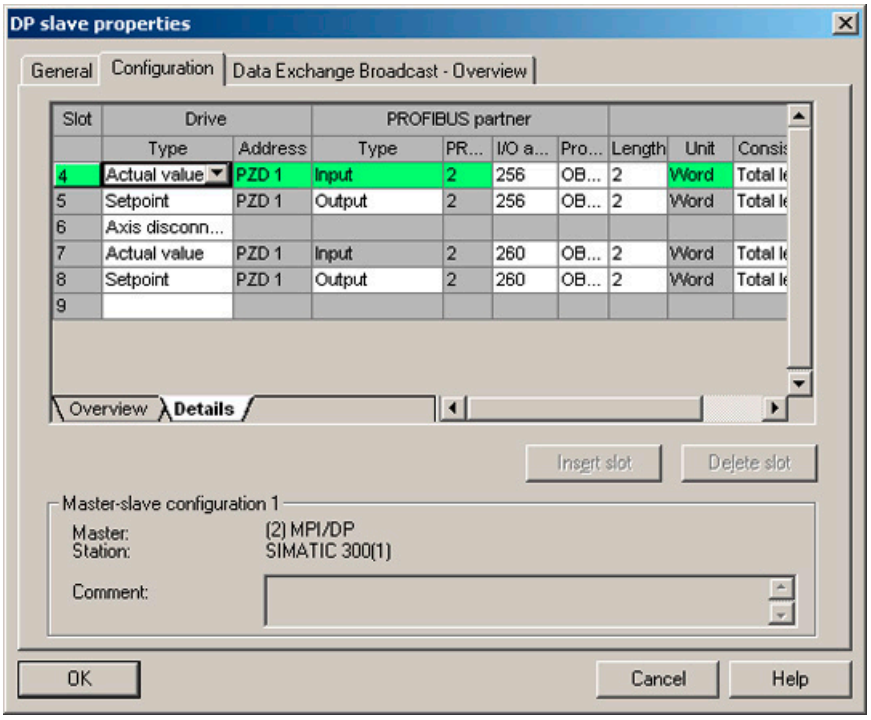

Figure 10-24 Detail view of slave configuration

4. The "Insert slot" button can be used to create a new setpoint slot for the SINAMICS DCM drive object.

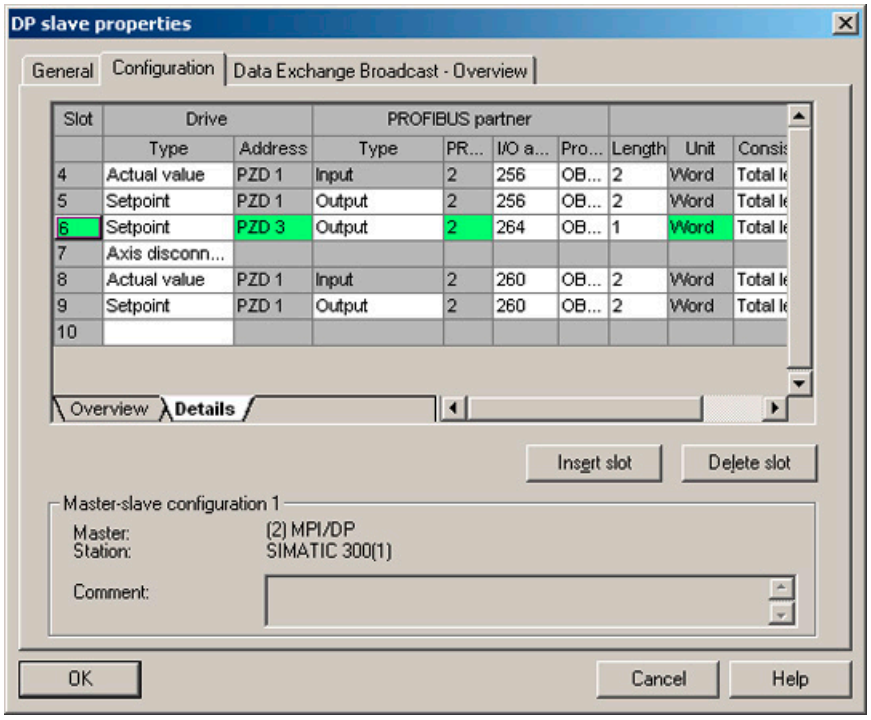

Figure 10-25 Insert new slot

5. Assign the setpoint slot the type "direct data exchange".
6. Select the publisher DP address in the "PROFIBUS address" column.
   All PROFIBUS DP slaves from which actual value data can be requested are listed here. It also provides the possibility of sharing data via direct data exchange within the same drive group.

7. The "I/O address" column displays the start address for each DO.
   Select the start address of the DO data to be read. This is 200 in the example.
   If the complete data of the publisher is not read, set this via the "Length" column. You may also offset the start address for the request so that data can be read out in the middle of the DO telegram.

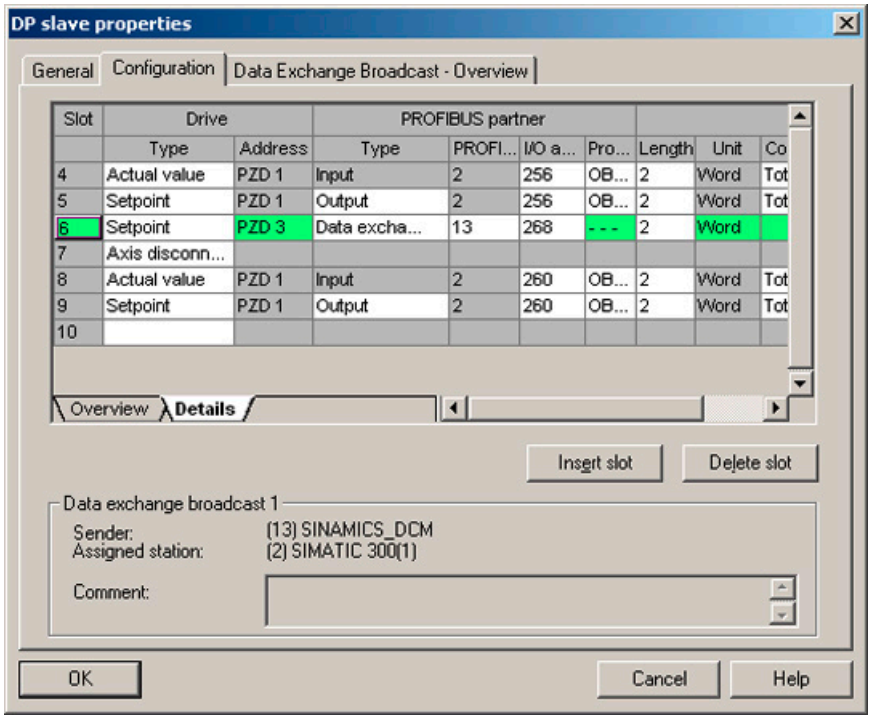

Figure 10-26 Configuring the direct data exchange nodes

8. The "Direct data exchange - Overview" tab shows you the configured direct data exchange relationships which correspond to the current status of the configuration in HW Config.

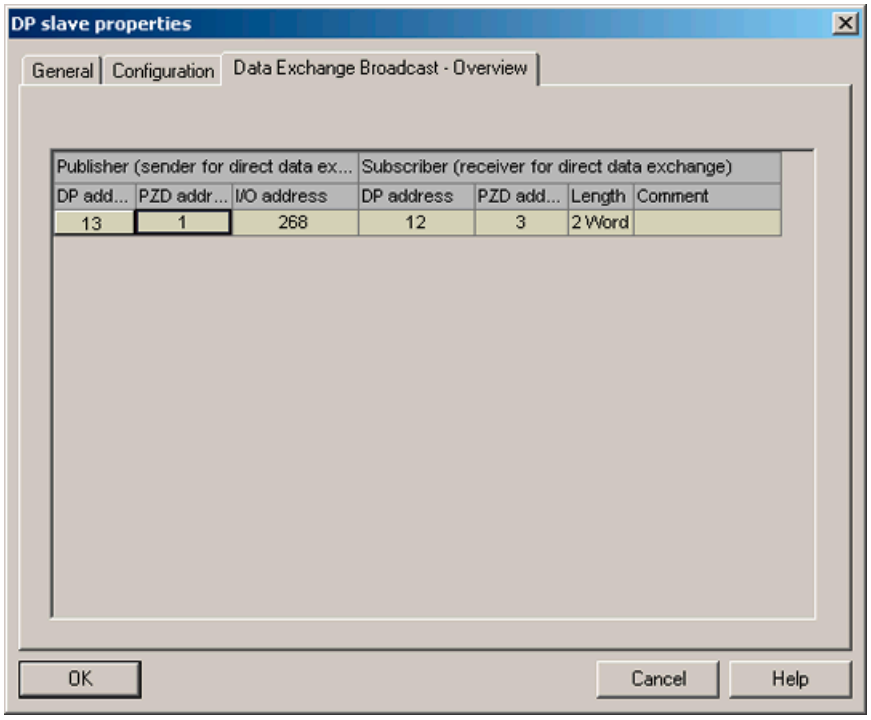

Figure 10-27 Direct data exchange - overview

9. When the direct data exchange link has been created, the standard telegram for the drive object is replaced with the "User-defined" telegram in the configuration overview.

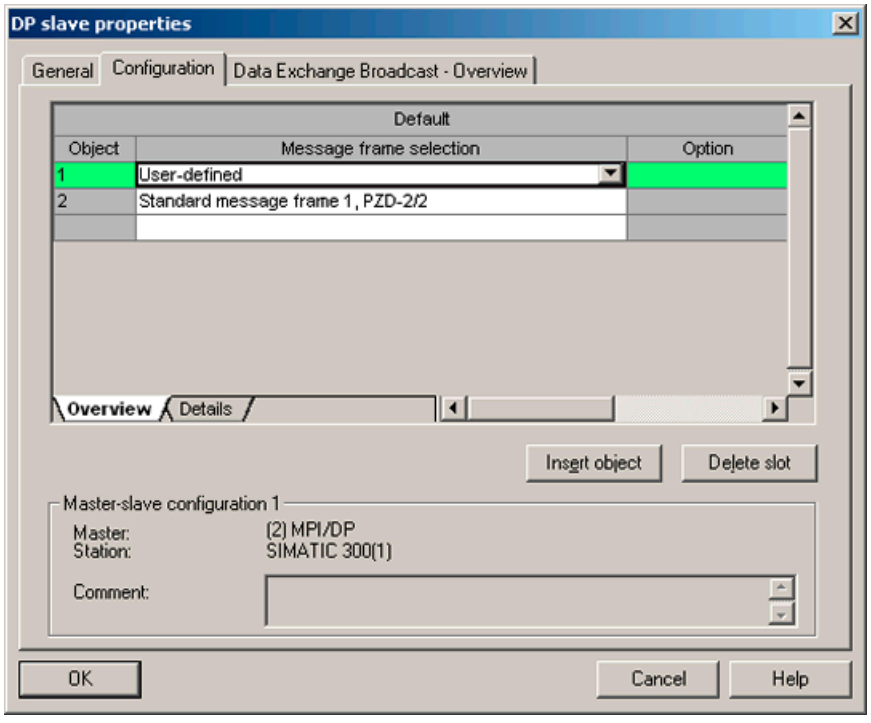

Figure 10-28 Telegram assignment for direct data exchange

10. The details after the creation of the direct data exchange link for the drive object of the SINAMICS DCM are as follows:

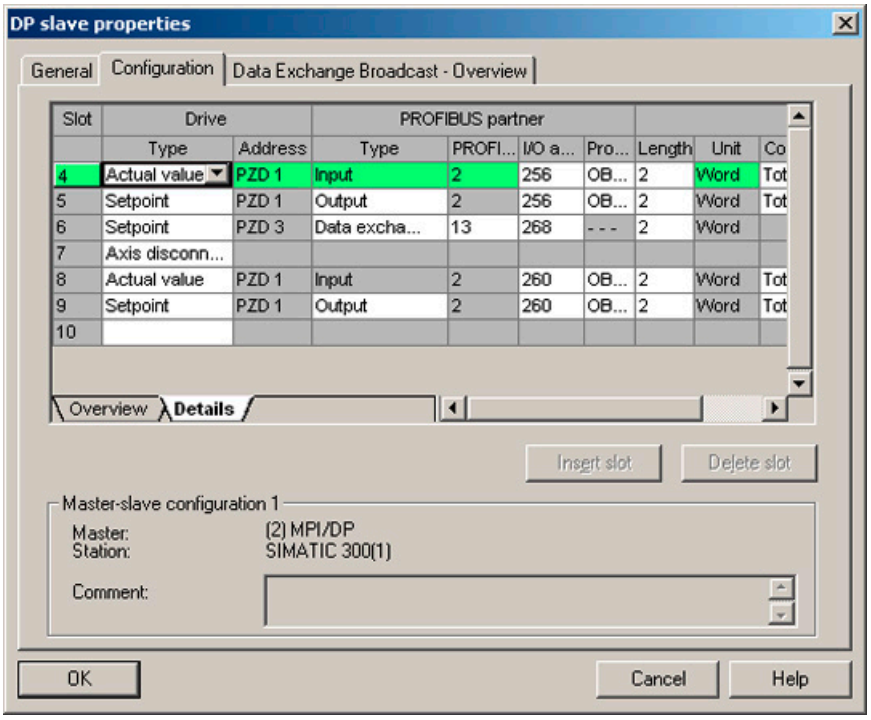

Figure 10-29 Details after the creation of the direct data exchange link

11. You must adjust the standard telegrams accordingly for every DO (drive object) of the selected CU that shall actively participate in direct data exchange.

Commissioning in STARTER

Direct data exchange is configured in HWConfig and is simply an extension of an existing telegram. Telegrams can be extended in STARTER (e.g. p0922 = 999).

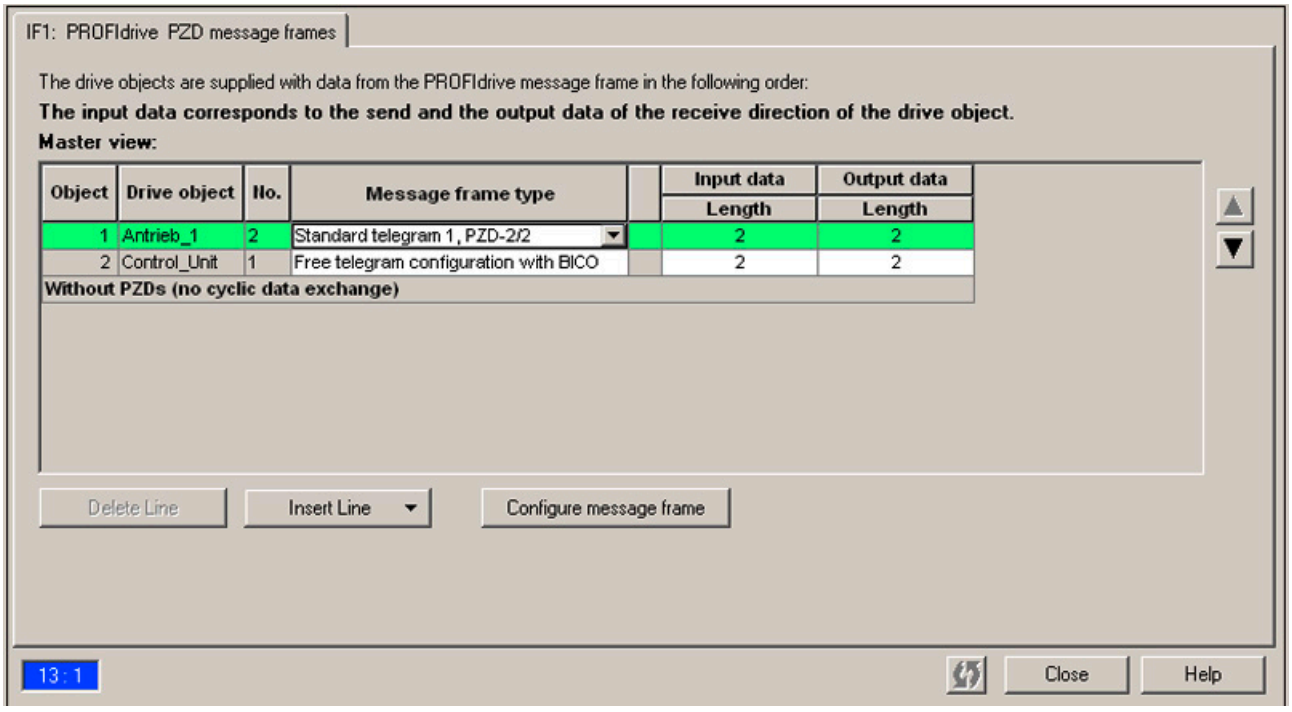

Figure 10-30 Configuring the direct data exchange links in STARTER

In order to terminate the configuration of direct data exchange for the DOs, the telegram data of the DOs in STARTER must be matched to those in the HW Config and must be extended. The configuration is made centrally via the configuration of the respective CU.

Procedure

1. In the overview for the PROFIBUS telegram, you can access the telegram components of the drive objects, here DC_CTRL. Select the telegram type "Free telegram configuration" for the configuration.
2. Enter the telegram lengths for the input data and output data according to the settings in HW Config. For direct data exchange links, the input data consists of the telegram component of the master and the direct data exchange data.
3. Then set the telegram component in the telegram selection to the standard telegram for drive objects (in the example: Standard telegram 1), which results in a split display of the telegram types (standard telegram + telegram extension). The telegram extension represents the telegram portion of direct data exchange.

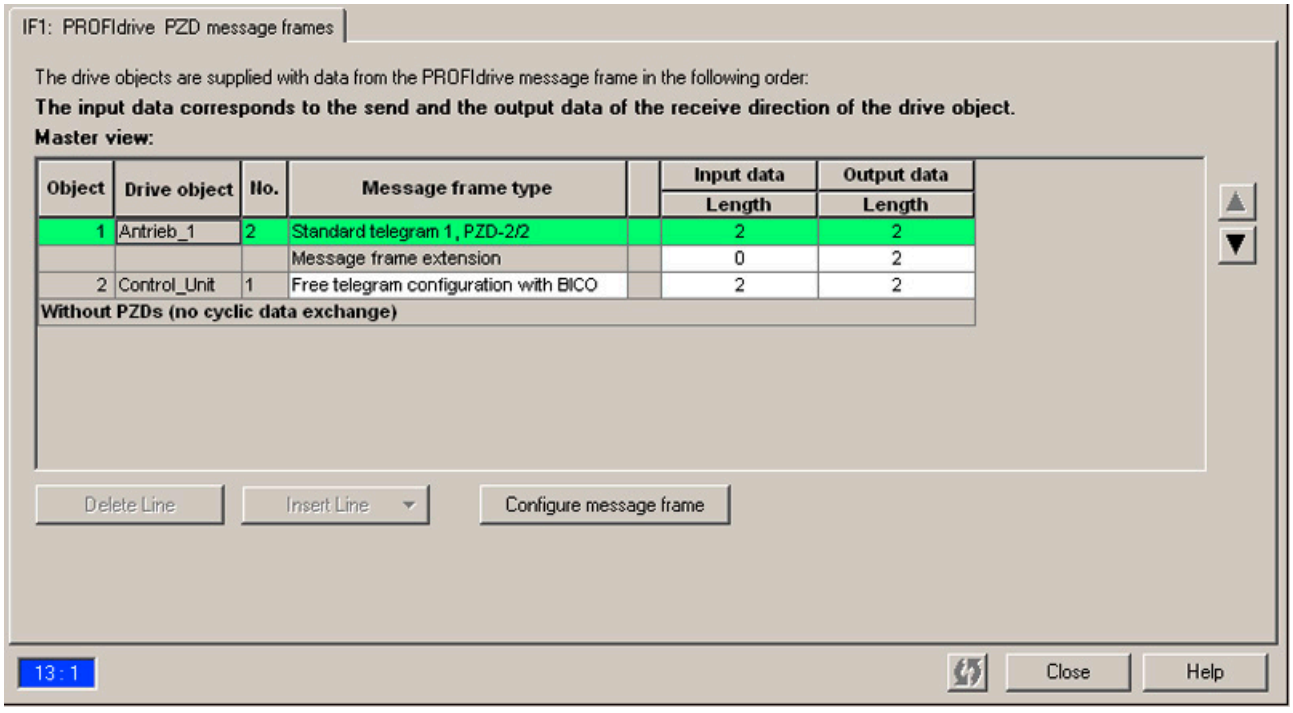

Figure 10-31 Display of the telegram extension

By selecting the item "Communication → PROFIBUS" for the drive object "DC_CTRL" in the project navigator, you obtain the structure of the PROFIBUS telegram in the receive and send directions.
The telegram extension from PZD3 onwards is the component for direct data exchange.

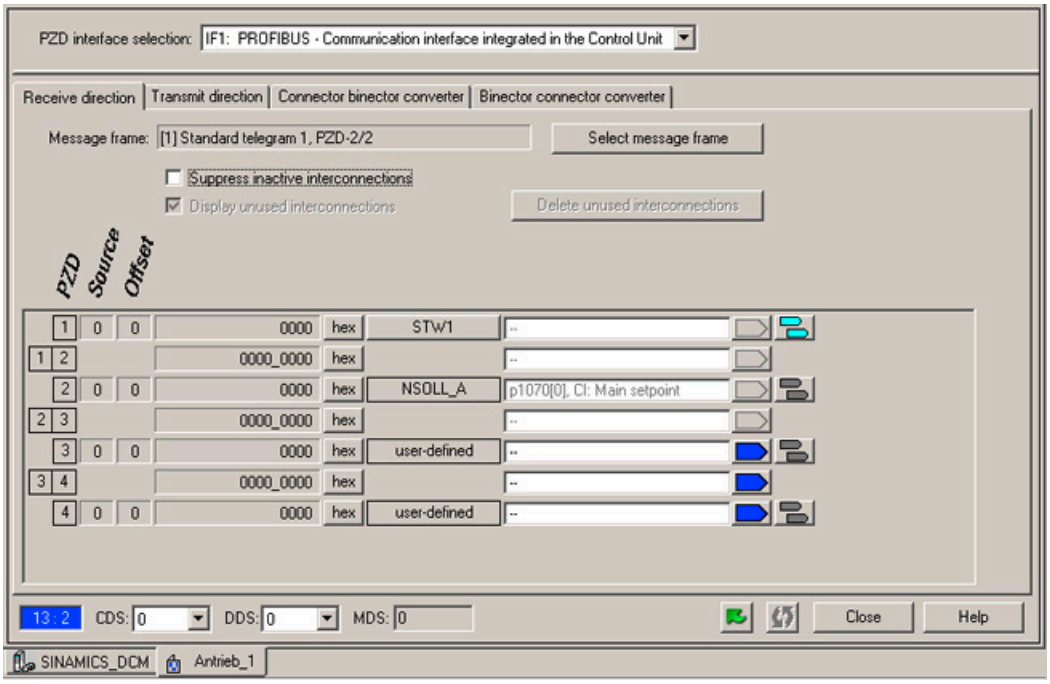

Figure 10-32 Configuring the PROFIBUS direct data exchange in STARTER

To connect the drive objects to the process data which is received via direct data exchange, you also need to connect the appropriate connectors to the corresponding signal sinks. A list for the connector shows all signals that are available for interconnection.

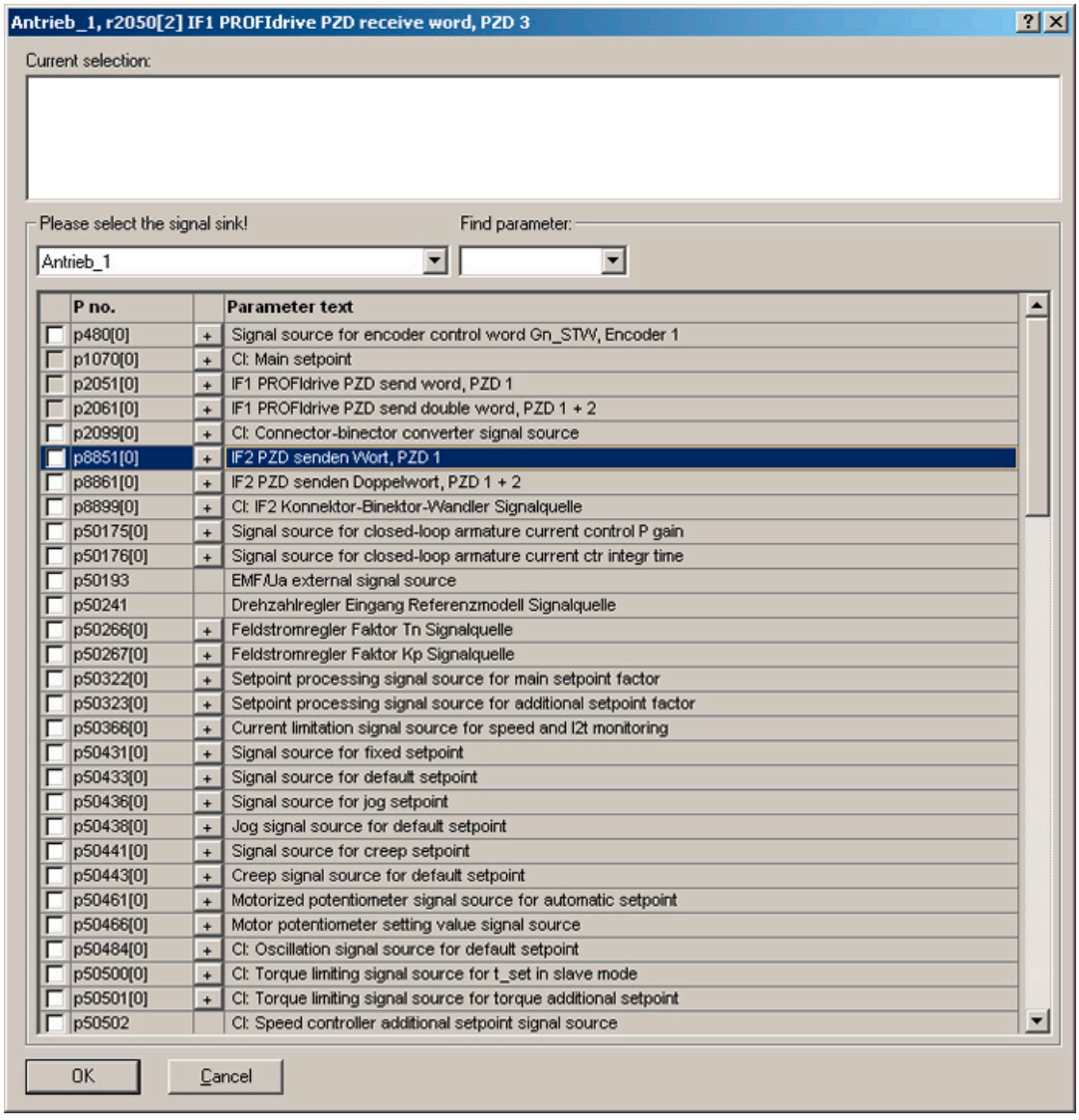

Figure 10-33 Linking the PZDs for direct data exchange with external signals

10.4.4.4 GSD in operation

Generic station description file

In special generic station description files (GSD), the properties of a PROFIBUS device are uniquely and fully described to use PROFIBUS direct data exchange for SINAMICS.

The GSD files can be found:

- On the Internet. For the link, see “Preface (Page 3)”
- On the memory card in the directory \\SIEMENS\SINAMICS\DATA\CFG\
  - Universal module
  - Axis separator
  - Standard telegram1, PZD-2/2
  - Standard telegram20, PZD-2/6
  - SIEMENS telegram 220, PZD-10/10
  - SIEMENS telegram 352, PZD-6/6
  - Free telegram, PZD-4/4
  - Free telegram, PZD-8/8
  - Free telegram, PZD-16/16
  - Free telegram, PZD-32/32
  - Free telegram, PZD-64/64
  - Device-to-device, PZD-1
  - Device-to-device, PZD-2
  - Device-to-device, PZD-4
  - Device-to-device, PZD-8

The SINAMICS S DXB GSD file contains among other things standard telegrams, free telegrams and device-to-device telegrams for configuring direct data exchange. The user must take these telegram parts and an axis separator after each drive object to compose a telegram for the drive unit.

Processing a GSD file in HW Config is includen in the SIMATIC documentation. Suppliers of PROFIBUS components can provide their own bus configuration tool. The description of the respective bus configuration tool is described in the relevant documentation.

Device identification

Identification for individual devices facilitates diagnostics and provides an overview of the nodes on the PROFIBUS.

The information for each device is stored in the Control Unit parameter r0964[0...6] device identification.

10.4.4.5 Diagnostics of the PROFIBUS direct data exchange in STARTER

Since the PROFIBUS direct data exchange is implemented on the basis of a broadcast telegram, only the subscriber can detect connection or data faults, e.g. via the publisher data length (see "Configuration telegram").

The publisher can only detect and report an interruption of the cyclic connection to the DP master (A01920, F01910). The broadcast telegram to the subscriber will not provide

any feedback. A fault of a subscriber must be fed back via direct data exchange. In case of a "master drive" 1:n, however, the limited quantity framework (see "Links and requests") should be observed. It is not possible to have n subscribers report their status via direct data exchange directly to the "master drive" (publisher)!

Diagnostics can be performed using the diagnostic parameters r2075 (Receive PROFIBUS diagnostics telegram offset PZD) and r2076 (Send PROFIBUS diagnostics telegram offset PZD). The parameter r2074 (PROFIBUS diagnostics, receive bus address PZD) displays the DP address of the setpoint source of the respective PZD.

r2074 and r2075 enable the source of a direct data exchange relationship to be verified in the subscriber.

Note

The subscribers do not monitor the existence of an isochronous publisher sign of life.

Faults and alarms with PROFIBUS direct data exchange

Alarm A01945 signals that the connection to at least one publisher of the drive device is missing or has failed. Any interruption to the publisher is also reported by fault F01946 at the affected drive object. A failure of the publisher only impacts the respective drive objects.

More detailed information on the messages can be found in the SINAMICS DCM List Manual.

10.4.5 Messages via diagnostics channels

Messages can be displayed not only via the well-known commissioning tools (STARTER, SCOUT). After the activation of a diagnostic function, the messages are also transferred to the higher-level controller via the standardized diagnostic channels. The messages are evaluated there or forwarded for convenient display at the various user interfaces (SIMATIC HMI, TIA Portal, etc.). The messages are shown on the respective user interfaces similarly as in STARTER.

In this way, problems or faults can be located immediately regardless of the tool currently being used, and then corrected immediately. No further tools must therefore be called for the correction.

Activating the diagnostics function

The diagnostics function is activated or deactivated via the parameterization of the relevant configuration tool (HW Config, TIA Portal, etc.).

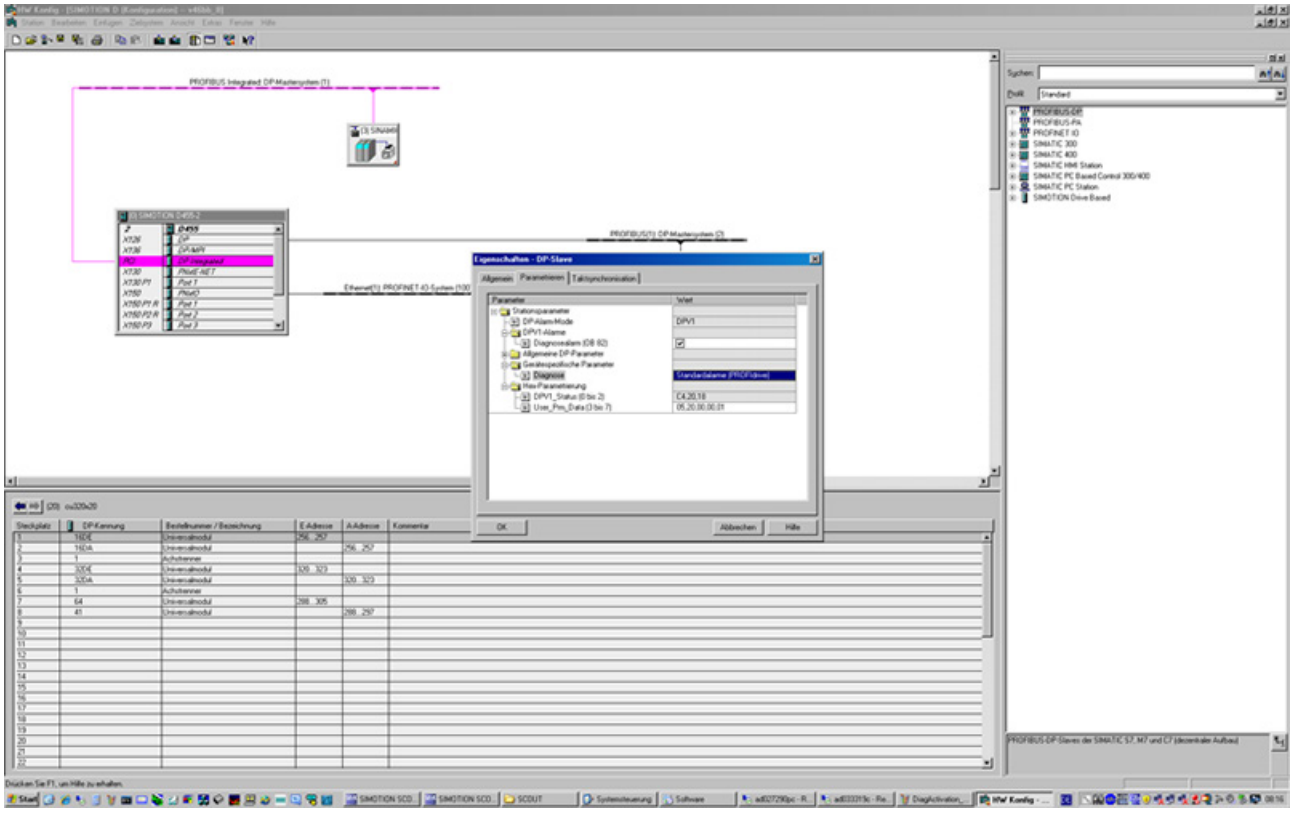

Figure 10-34 Activation of PROFIBUS

The following parameter assignments are possible:

Setting	Code for parameter assignment
Inactive	0
PROFIdrive error classes	1

When establishing the communication between SINAMICS and a master/controller, the activated diagnostics mode of this master/controller is first transferred to the drive. With activated diagnostics, SINAMICS first transfers all pending messages to the master/controller.

Messages

The following PROFIBUS error texts can be displayed:

Line faulted

A line supply fault has occurred (phase failure, voltage level, etc.). Check the line supply and fuses. Check the supply voltage. Check the wiring.

Power electronics faulted

An impermissible operating state of the power electronics was detected (overcurrent, overtemperature, etc.). Check compliance with the permissible load cycles. Check the ambient temperatures (fan).

Overtemp. electronic component

The temperature in the component has exceeded the highest permissible limit. Check the ambient temperature / control cabinet ventilation.

Ground fault / inter-phase short-circuit detected

A ground fault / inter-phase short-circuit was detected in the power cables or in the motor windings. Check the power cables (connection). Check the motor.

Motor overload

The motor was operated outside the permissible limits (temperature, current, torque...). Check the load cycles and set limits. Check the ambient temperature / motor cooling.

Communication to the controller faulted

The communication to the higher-level controller (internal coupling, PROFIBUS, PROFINET, etc.) is faulted or interrupted. Check the state of the higher-level controller. Check the communication connection/wiring. Check the bus configuration/cycles.

Actual position/speed value error

An illegal signal state was detected while evaluating the encoder signals (track signals, zero marks, absolute values, etc.). Check the encoder / state of the encoder signals. Observe the maximum permissible frequencies.

Internal communication faulted

The internal communication between the SINAMICS components is faulted or interrupted. Check the DRIVE-CLiQ wiring. Ensure an EMC-compliant installation. Observe the maximum permissible quantity structures / cycles.

External signal state error

A measured value / signal state read-in via the input area (digital/analog/temperature) has assumed an impermissible value/state. Identify and check the relevant signal. Check the set thresholds.

Application / function faulted

The application / technological function has exceeded a (set) limit (position, velocity, torque, etc.). Identify and check the relevant limit. Check the setpoint specification of the higher-level controller.

Error in the parameterization / commissioning

An error was identified in the parameterization or in a commissioning procedure, or the parameterization does not match the actual device configuration. Determine the exact cause of the error with the commissioning tool, adapt the parameterization or device configuration.

10.5 Communication via PROFINET IO

10.5.1 Activating online mode: STARTER via PROFINET IO

Description

The following options are available for online operation via PROFINET IO:

- Online operation via IP

Requirements

- STARTER with Version ≥ 4.1.5 (SINAMICS DCM is supported starting only from STARTER Version 4.1.5)
- CBE20

STARTER via PROFINET IO (example)

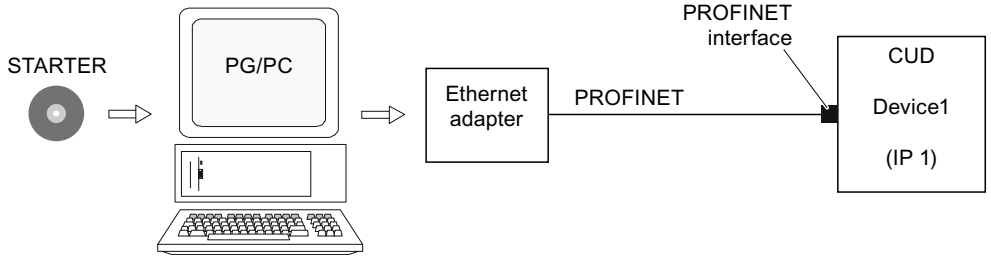

Figure 10-35 STARTER via PROFINET (example)

Procedure for activating online mode with PROFINET

1. Assign the PG/PC a fixed, free IP address. In our example, we have selected 169.254.11.1. Set the subnet mask to 255.255.0.0.
2. Make the settings in STARTER
3. Select online operation in STARTER.

Setting the IP address in Microsoft Windows 7

Note

The following procedure is based on the Microsoft Windows 7 operating system. Under other operating systems (such as Microsoft Windows XP), operation may differ slightly.

1. In the PG/PC call the control panel using the "Start > Control Panel" menu item.
2. In the control panel of your PG/PC, under "Network and Internet", select the "Network and Sharing Center" function.
3. For your network card that is displayed, click the connection link.
4. Click in the status dialog of the connection on "Properties" and acknowledge the subsequent confirmation prompt with "Yes".
5. In the properties dialog of the connection, select the "Internet protocol 4 (TCP/IPv4)" element and then click "Properties".
6. In the properties dialog, activate the "Use the following IP address" option.
7. Set the IP address of the PG/PC access interface to the Control Unit to 169.254.11.1 and the subnet mask to 255.255.0.0.

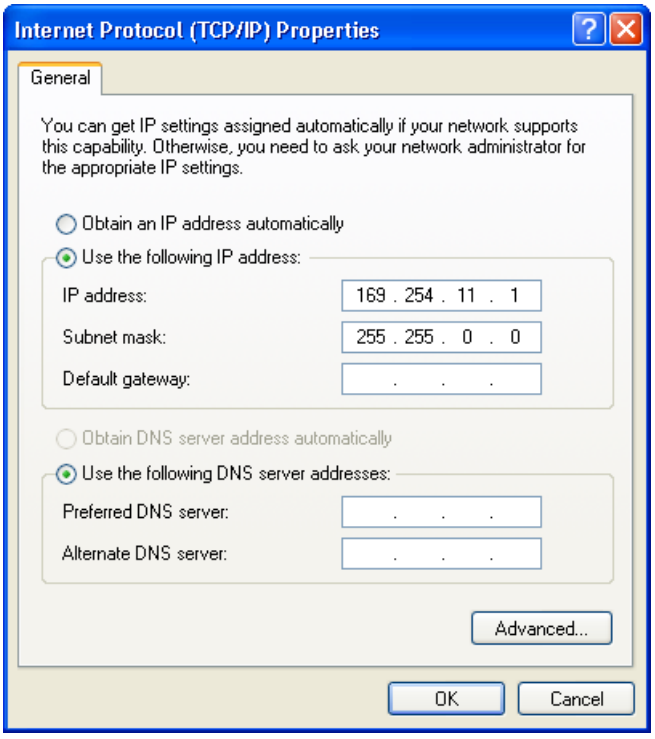

Figure 10-36 Example: IPv4 address of the PG/PC

8. Click "OK" and close the Microsoft Windows-specific window of the network connections.

Setting the interface in STARTER

In STARTER, you set communication via PROFINET as follows:

1. Call the menu "Tools > Set PG/PC interface ...".
2. Select the "Access point of the application", and therefore the interface parameter assignment (in the example we use the access point "S7ONLINE (STEP 7)" and the interface parameterization "TCP/IP(Auto)->Belkin F5D 5055").

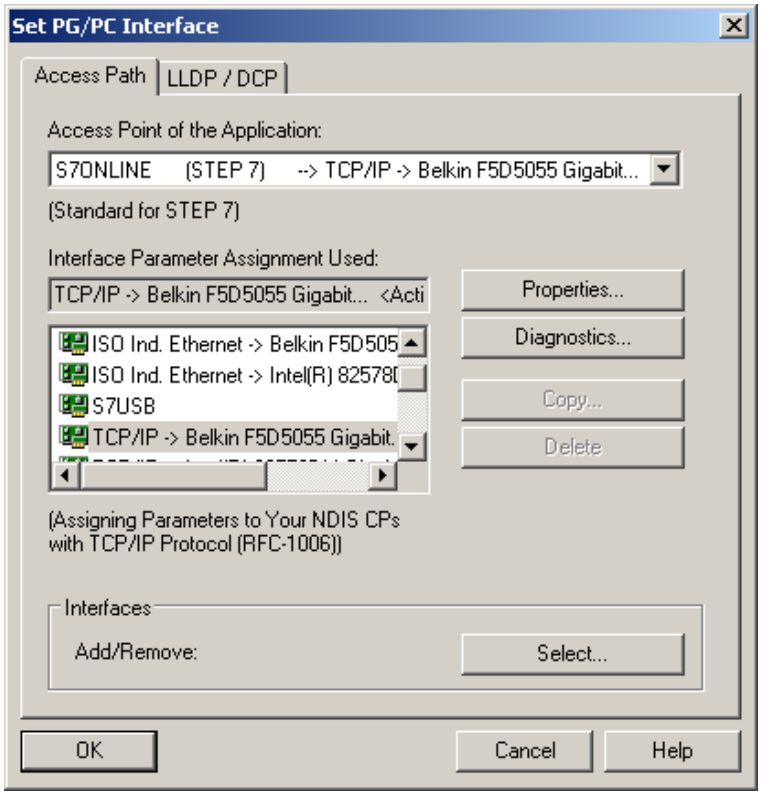

Figure 10-37 Setting the PG/PC interface

If the desired interface does not yet exist in the selection list, you can create it.

3. Click the "Select" button.

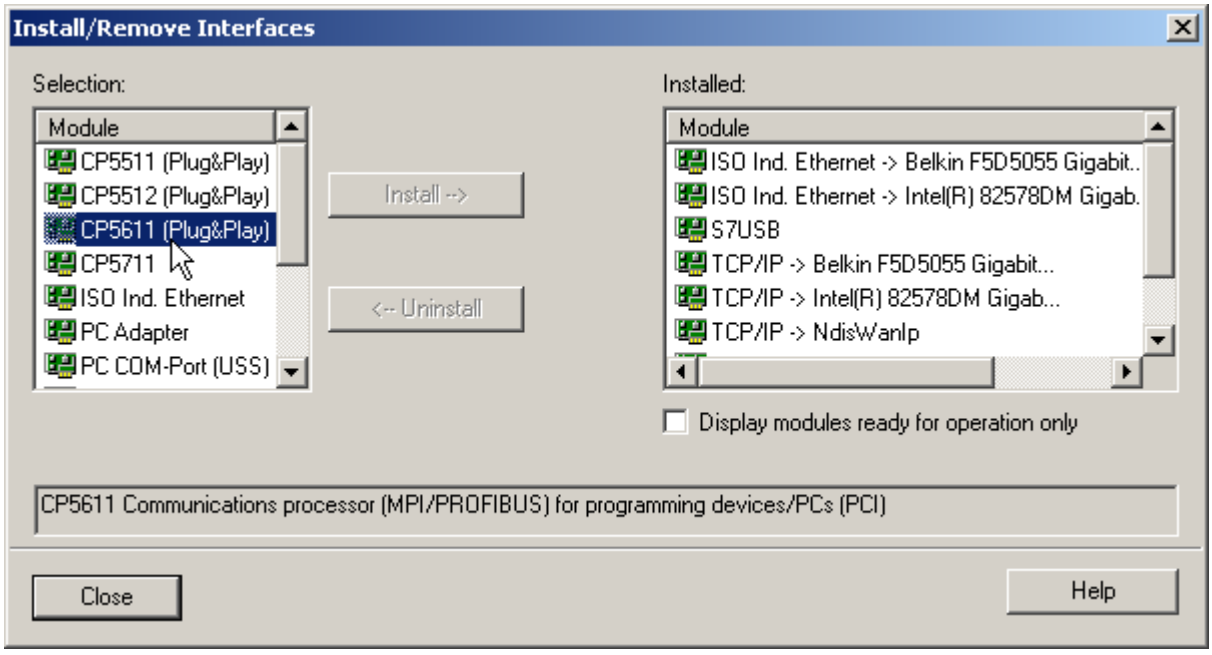

Figure 10-38 Installing the interface

4. In the selection list on the left-hand side, select the module that you want to use as the interface.
5. Click the "Install" button.
   The selected module is then listed in the "Installed" list.
6. Click the "Close" button.

You can then check the IP address of the integrated Ethernet interface as follows:

1. Select the drive unit and call the shortcut menu "Target device > Online access ...".
2. Click the "Module addresses" tab.
   The IP address that you set must be located under "Connect to target station".

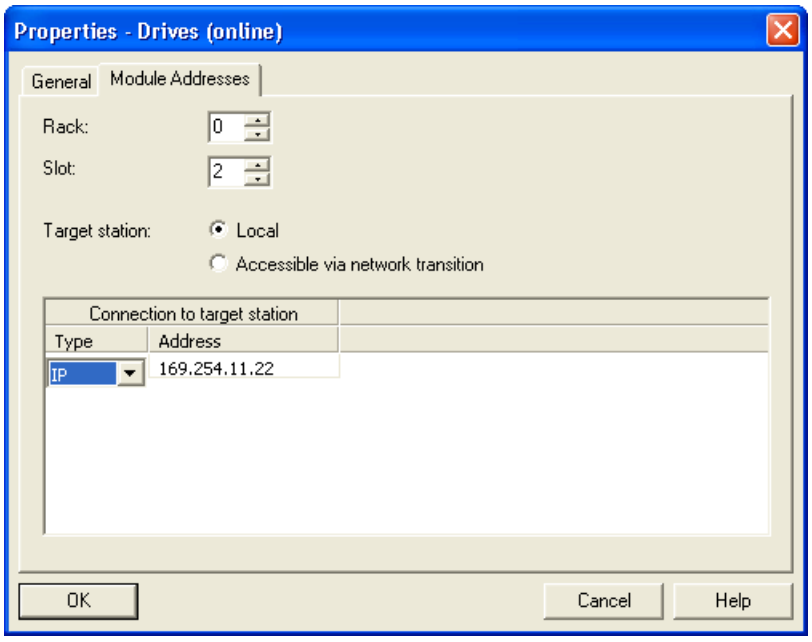

Figure 10-39 Setting online access

Assigning the IP address and name for the PROFINET interface of the drive unit

With STARTER, you can assign an IP address and a name to the PROFINET interface (e.g. CBE20) of the drive unit. The following steps are required:

1. Connect the programming device via a Crosslink-Ethernet cable with the CBE20, inserted in the CUD.
2. Switch on the Control Unit.
3. Open STARTER.

4. Call the menu "Project > Accessible nodes" or click the "Accessible nodes" icon.
   - The search is performed for available nodes connected to PROFINET.
   - The Control Unit is identified and displayed under "Accessible nodes" as the bus node with the IP address 0.0.0.0, without any type information.

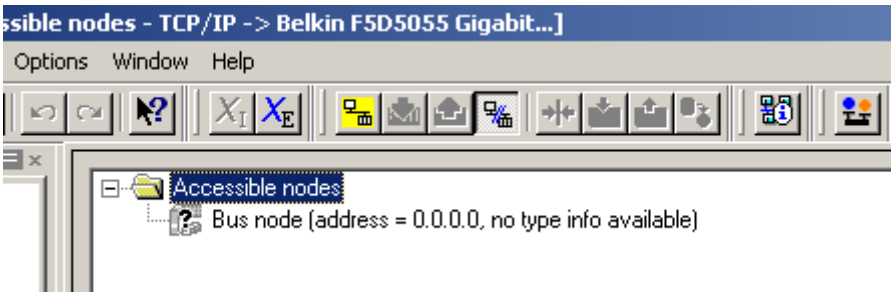

Figure 10-40 Bus nodes found

5. Right-click the bus node entry to open the shortcut menu "Edit Ethernet node ...".
   - In the selection window that opens "Edit Ethernet node" you will also see the MAC address.
6. Under "Set IP configuration", enter the IP address that you selected (e.g. 169.254.11.33) and the subnet mask (e.g. 255.255.0.0).
7. Click the "Set IP configuration" button.
   - The data transfer is confirmed.
8. Click the "Update" button.
   - The bus node is identified as a drive unit.
   - The address and the type are specified.

   In the "Edit Ethernet node" selection window you can also assign a device name to the drive unit that has been detected.
9. In the "Device name" field, enter the name that you have selected.

Note

ST (Structured Text) conventions must be satisfied for the name assignment of IO devices in PROFINET (SINAMICS components). The names must be unique within PROFINET. Rules for assigning names:

- Other than "-" and ".", no special characters (such as accented characters, spaces, brackets) are permitted in the name of an IO device.
- The device name must not begin or end with the "-" character.
- The device name must not begin with a number.
- Maximum total length of 240 characters (lowercase characters, numbers, hyphen, or period)
- A name component within the device name, e.g. a string between two periods, must not exceed 63 characters.
- The device name must not take the form n.n.n.n (n = 0...999).
- The device name must not begin with the character sequence "port-xyz" or "port-xyz-abcde" (a, b, c, d, e, x, y, z = 0...9).

In the "Device name" field, enter the name that you have selected.

10. Click the "Assign name" button.
    – The data transfer is confirmed.
11. Click the "Update" button.
    – The bus node is detected as drive unit and is consecutively numbered.
    – The address, device name and the type are specified.
12. Close the "Edit Ethernet node" window.
13. Activate the option button in front of the detected drive unit and click the "Accept" button. The SINAMICS drive with CBE20 is transferred as a drive object into the project tree. You can now continue to configure the drive object.
14. Click the "Connect to target system" button and then call the menu "Target system > Load > To target device", to load the project to the Control Unit memory card.
    The IP address and device name are stored non-volatile on the memory card of the Control Unit.

10.5.2 General information about PROFINET IO

General information

PROFINET IO is an open Industrial Ethernet standard for a wide range of production and process automation applications. PROFINET IO is based on Industrial Ethernet and observes TCP/IP and IT standards.

Deterministic signal processing in real time is important in industrial networks. PROFINET IO satisfies these requirements.

International standard IEC 61158 ensures open, multi-vendor systems.

PROFINET IO is optimized for high-speed, time-critical data communication at field level.

PROFINET IO

Within the context of Totally Integrated Automation (TIA), PROFINET IO is the systematic development of the following systems:

- PROFIBUS DP, the established fieldbus
- Industrial Ethernet, the communications bus for the cell level.

Experience gained from both systems was integrated into PROFINET IO. An Ethernet-based automation standard defined by PROFIBUS International (PROFIBUS user organization), PROFINET IO is a manufacturer-independent communication and engineering model.

PROFINET IO defines every aspect of the data exchange between IO controllers (devices with what is known as "controller functionality" and the IO devices (those with what is known as "device functionality") as well as carrying out parameterization and diagnostics. A PROFINET IO system is configured in virtually the same way as a PROFIBUS system.

A PROFINET IO system is assembled from the following devices:

- An IO controller controls automation tasks.
- An IO device is controlled and monitored by an IO controller. An IO device consists of several modules and submodules.
- An IO supervisor is an engineering tool, typically based on a PC, with which the individual IO devices (drive units) are parameterized and diagnosed.

IO devices: Drive units with PROFINET interface

- SINAMICS DCM with inserted CBE20

Cyclic communication using PROFINET IO with IRT or using RT is possible on all drive units equipped with a PROFINET interface. This means that error-free communication using other standard protocols is guaranteed within the same network.

Note

PROFINET for drive technology is standardized and described in the following document:

- **PROFIBUS profile PROFIdrive – Profile Drive Technology**
  Version V4.1, May 2006
  PROFIBUS User Organization e. V.
  Haid-und-Neu-Straße 7, D-76131 Karlsruhe, Germany
  http://www.profibus.com, Order Number 3.172, spec. Chapter 6
- IEC 61800-7

Note

For a CUD with inserted CBE20, the cyclic PZD channel is deactivated for PROFIBUS DP. By setting parameter p8839 = 1, the PZD channel can be reactivated, see Chapter "Parallel operation of communication interfaces (Page 410)".

10.5.2.1 Real-time (RT) and isochronous real-time (IRT) communication

Real-time communication

When communication takes place via TCP/IP, the resultant transmission times may be too long and non-deterministic to meet production automation requirements. When communicating time-critical IO user data, PROFINET IO therefore uses its own real-time channel, rather than TCP/IP.

Real time means that a system processes external events over a defined period.

Determinism

Determinism means that a system will react in a predictable ("deterministic") manner.
With PROFINET IO with IRT, it is possible to precisely determine (predict) transmission times.

PROFINET IO with RT (Real Time)

Real-time data is treated with a higher priority than TCP(UDP)/IP data. Transmission of time-critical data takes place at guaranteed time intervals. RT communication is the basis for data exchange with PROFINET IO.

PROFINET IO with IRT (Isochronous Real Time)

Isochronous real time: Real time property of PROFINET IO where IRT telegrams are transmitted deterministically via planned communication paths in a defined sequence to achieve the best possible synchronism and performance between the IO controller and IO device (drive unit). IRT is also known as time-scheduled communication whereby knowledge about the network structure (topology) is utilized. IRT requires special network components that support planned data transfer.

Minimum cycle times of 500 µs and a jitter accuracy of less than 1 µs can be achieved with this transmission method.

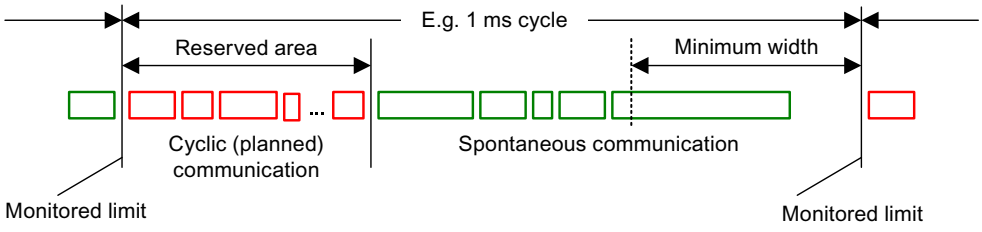

Figure 10-41 Bandwidth distribution/reservation, PROFINET IO

10.5.2.2 Addresses

MAC address

Every Ethernet and PROFINET interface is assigned a worldwide unique device identifier in the factory. This 6-byte long device identifier is the MAC address. The MAC address is divided up as follows:

- Three bytes for the manufacturer's ID
- Three bytes for the device identifier (consecutive number)

The MAC address is on a label (CBE20), e.g. 08-00-06-6B-80-C0

IP address

The TCP/IP protocol is a prerequisite for establishing a connection and parameterization. To allow a PROFINET device to be addressed as a node on Industrial Ethernet, this device requires a unique IP address in the network. The IP address is made up of 4 decimal numbers with a range of values from 0 through 255. The decimal numbers are separated by a decimal point. The IP address comprises:

- The address of the node (also called host or network node)
- The address of the (sub) network

IP address assignment

The IP addresses of IO devices can be assigned by the IO controller and always have the same subnet screen as the IO controller. In this case, the IP address is not stored permanently. The IP address entry is lost after POWER ON/OFF. The IP address can be assigned retentively via the STARTER function "Accessible nodes".

This function can also be performed with HW Config of STEP 7. The function is called "Edit Ethernet node" here.

Note

If the network is part of an existing Ethernet company network, obtain the information (IP address) from your network administrator.

Device name (NameOfStation)

When it is shipped, an IO device does not have a device name. An IO device can only be addressed by an IO controller, for example, for the transfer of project engineering data (including the IP address) during startup or for user data exchange in cyclic operation, after it has been assigned a device name with the IO supervisor.

Note

The device name must be stored retentively either with STARTER or with HW Config of STEP 7.

Note

You can enter the address data for the ports of the optional CBE20 module in STARTER in the expert list using parameters p8940, p8941, p8942 and p8943.

Replacing the Control Unit (CUD) (IO device)

If the IP address and device name are stored in non-volatile memory, this data is also forwarded with the memory card of the Control Unit.

If a complete Control Unit needs to be replaced due to a device or module defect, the new Control Unit automatically parameterizes and configures using the data on the memory card. Following this, cyclic exchange of user data is restarted. The memory card allows module exchange without an IO supervisor when a fault occurs in a PROFINET device.

10.5.2.3 Data transfer

Properties

The PROFINET interface on a drive unit supports the simultaneous operation of:

- IRT – isochronous real-time Ethernet
- RT – real-time Ethernet
- Standard Ethernet services (TCP/IP, LLDP, UDP and DCP)

PROFIdrive telegram for cyclic data transmission, acyclic services

Telegrams to send and receive process data are available for each drive object of a drive unit with cyclic process data exchange.
In addition to cyclic data transfer, acyclic services can also be used for parameterizing and configuring the drive unit. These acyclic services can be utilized by the IO supervisor or IO controller.

Sequence of drive objects in the telegram

On the drive side, the sequence of drive objects in the telegram is displayed via a list in p0978[0...24] where it can also be changed.

You can use the STARTER commissioning tool to display the sequence of drive objects for a commissioned drive system in online mode in the project navigator under "Drive unit" **>** "Communication" > "Telegram configuration".

When you create the configuration on the controller side (e.g. HW Config), the process-data-capable drive objects for the application are added to the telegram in this sequence.

The following drive objects can exchange process data:

- Control Unit (CU_DC)
- Terminal Module 15 (TM15)
- Terminal Module 31 (TM31)
- Terminal Module 150 (TM150)
- DC drive control (DC_CTRL)

Note

The sequence of drive objects in HW Config must be the same as that in the drive (p0978).

The structure of the telegram depends on the drive objects taken into account during configuration. Configurations are permitted that do not take into account all of the drive objects that are present in the drive system.

Example:

The following configurations, for example, are possible:

- Configuration with CU_DC, DC_CTRL
- Configuration with DC_CTRL, TM31, TM31
- etc.

10.5.2.4 Communication channels for PROFINET

Control Unit with CBE20 Communication Board Ethernet

A Communication Board can be optionally inserted in the Control Unit CUD:

- The CBE20 Communication Board is a PROFINET switch with four PROFINET ports.

Overview of important parameters

(see the SINAMICS DCM List Manual)

- p8829 CBE20 remote controller number
- p8940[0...239] CBE20 name of station
- p8941[0...3] CBE20 IP address of station
- p8942[0...3] CBE20 default gateway of station
- p8943[0...3] CBE20 subnet mask of station
- p8944 CBE20 DHCP mode
- p8945 CBE20 interface configuration
- r8950[0...239] CBE20 name of active station
- r8951[0...3] CBE20 IP address of active station
- r8952[0...3] CBE20 default gateway of active station
- r8953[0...3] CBE20 subnet mask of active station
- r8954 CBE20 DHCP mode active
- r8955[0...5] CBE20 MAC address of station
- r8959 CBE20 DAP ID

10.5.3 Drive control with PROFINET

PROFINET interfaces

The CBE20 Communication Board Ethernet can be inserted in the option slot of a CUD. The Communication Board Ethernet CBE20 is a PROFINET switch with 4 ports.

Note

Ring topology

When connecting the ports, it must be ensured that for standard applications a ring topology is not created. Additional information on ring topologies can be found in Chapter “Media redundancy (Page 472)”.

References

- The integration of a SINAMICS Control Unit in a PROFINET IO system is described in detail in System Manual "SIMOTION SCOUT Communication” "Communication with SIMOTION (https://support.industry.siemens.com/cs/de/en/view/109749943)".
- For an example of how to link a Control Unit to a SIMATIC S7 via PROFINET IO, please refer to the FAQ "PROFINET IO communication between an S7-CPU and SINAMICS S120" on the Internet.
- For a description of the CBE20 Communication Board Ethernet and how you can use this in the drive, see Chapter "Additional system components (Page 169)".

Telegrams

PROFIdrive telegrams are available for implementing cyclic communication via PROFINET IO (see Chapter "Communication according to PROFIdrive", cyclic communication).

DCP flashing

This function checks the correct assignment to a module and its interfaces.

1. In HW Config or the STEP 7 Manager, select the menu item "Target system" > Ethernet > Edit Ethernet node".
   The "Edit Ethernet Node" dialog box opens.
2. Click the "Browse" button.
   The "Browse Network" dialog box opens and displays the connected nodes.
3. Select the CUD with inserted CBE20 as node.
   The "DCP flashing" function is then activated via the "Flash" button.

The "DCP flashing" function is activated on the RDY LED (READY LED 2 Hz, green/orange or red/orange) on the CUD.

The LED will continue to flash as long as the dialog is open. When the dialog is closed, the LED will go out automatically. The function is available as of STEP 7 V5.3 SP1 via Ethernet.

STEP 7 routing with CBE20 Communication Board Ethernet

The CBE20 does not support STEP 7 routing between PROFIBUS and PROFINET IO.

Connecting the PC to the STARTER commissioning tool

You can go online with STARTER in a number of ways, which are illustrated below:

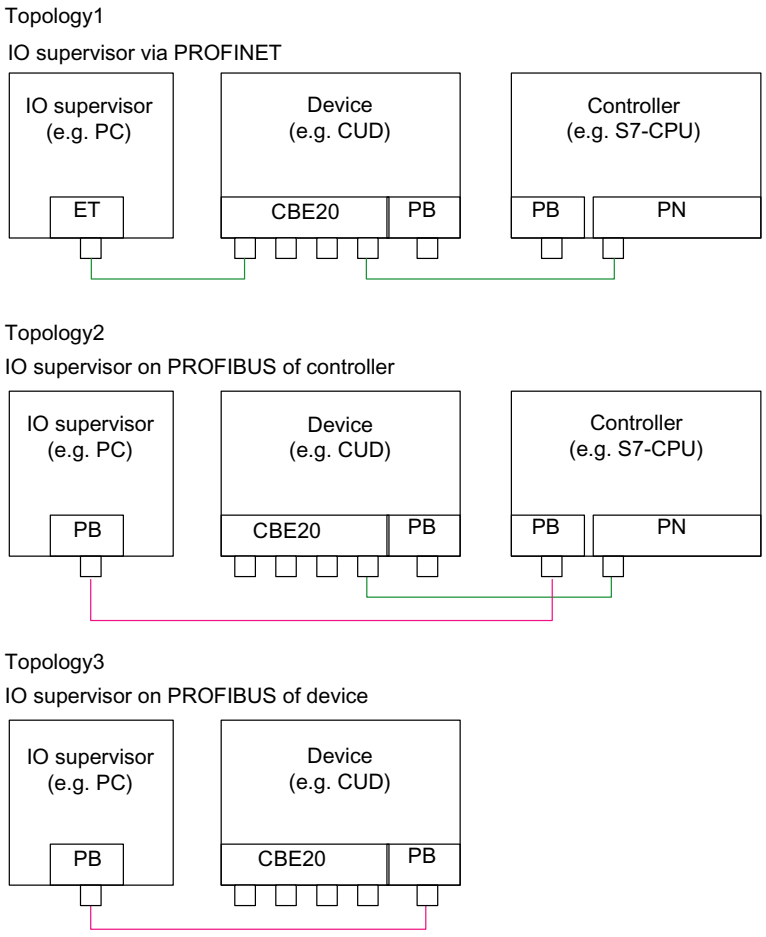

Figure 10-42 Connecting the IO supervisor

Note

SINAMICS does not support routing from PROFIBUS to PROFINET and vice versa.

Note

If a CBE20 Communication Board Ethernet fails (e.g. due to a power failure), then communication with the subsequent nodes is interrupted at this point.

10.5.3.1 Media redundancy

To increase the availability of PROFINET, you can create a ring topology for redundancy purposes. If the ring is interrupted at one point, the data paths between the devices are automatically reconfigured. Following reconfiguration, the devices can once again be accessed in the resulting new topology.

To create a ring topology with media redundancy, route the two ends of a line-type PROFINET topology to a switch which serves as redundancy manager (e.g. a suitable SCALANCE switch). Closing the linear bus topology is realized using two ports (ring ports) of the SCALANCE redundancy manager, which monitors the data telegrams in the PROFINET ring. All other connected PROFINET nodes are redundancy clients.

The Media Redundancy Protocol (MRP) is the standard procedure for media redundancy. Using this procedure, a maximum of 50 devices can participate in each ring. In the case of an interrupted cable, data transfer is only briefly interrupted as the system switches over to the redundant data path.

If a short-term interruption is not permitted, data transfer must be set to IRT High Performance. The uninterruptible MRRT is automatically set.

From a CBE20, only the first two ports are capable of establishing a ring topology.

Note

In order to use the ring topology, the GSDML file version V2.3 must be installed.

This file can be found, for example, on the memory card as "\SIEMENS\SINAMICS\DATA\CFG\PNGSD.ZIP".

Configuring media redundancy

The ring topology is configured by appropriately configuring the participating devices individually in STEP 7.

10.5.4 RT classes for PROFINET IO

PROFINET IO is a scalable realtime communication system based on Ethernet technology. The scalable approach is expressed with three realtime classes.

RT

RT communication is based on standard Ethernet. The data is transferred via prioritized Ethernet telegrams. Because standard Ethernet does not support any synchronization mechanisms, isochronous operation is not possible with PROFINET IO with RT!

The real update cycle in which cyclic data is exchanged depends on the bus load, the devices used and the quantity framework of the I/O data. The update cycle is a multiple of the send cycle.

IRT

Two options are available with this RT class:

- IRT "high flexibility"
- IRT "high performance"
  SINAMICS DCM only supports option IRT "high-performance".

Software preconditions for configuring IRT:

- STEP 7 5.4 SP4 (HW Config)

Note

For further information about configuring the PROFINET interface for the I/O controller and I/O device, please refer to the following document: SIMOTION SCOUT Communication System Manual.

IRT "high flexibility"

The telegrams are sent cyclically in a deterministic cycle (Isochronous Real Time). The telegrams are exchanged in a bandwidth reserved by the hardware. One IRT time interval and one standard Ethernet time interval are created for each cycle.

Note

SINAMICS DCM does not support IRT "high flexibility".

IRT "high performance"

In addition to the bandwidth reservation, the telegram traffic can be further optimized by configuring the topology. This enhances the performance during data exchange and the deterministic behavior. The IRT time interval can thus be further optimized or minimized with respect to IRT "high flexibility".

In addition to the isochronous data transfer provided by IRT, even the application itself (position control cycle, IPO cycle) can be isochronous in the devices. This is an essential requirement for closed-loop axis control and synchronization via the bus. Isochronous data transfer with cycle times well below one millisecond and with a deviation in the cycle start (jitter) of less than a microsecond provide sufficient performance reserves for demanding motion control applications.

The RT classes IRT "high flexibility" and IRT "high performance" can be selected as options in the synchronization settings configuration area of HW Config. In the description below, both these classes are simply referred to as "IRT".

In contrast to standard Ethernet and PROFINET IO with RT, the telegrams for PROFINET IO with IRT are transferred according to a schedule.

Modules

The following SINAMICS modules support the IRT "high performance":

- S120 CU320 together with the CBE20
- S120 CU320-2 DP together with the CBE20
- S120 CU320-2 PN
- S120 CU310 PN
- S120 CU310-2 PN
- S110 CU305 PN
- CUD in conjunction with CBE20

Note

SINAMICS DCM does not support isochronous operation.

Also for cyclic communication via PROFINET IRT the drive closed-loop control is independent of the PROFINET clock cycle.

Comparison between RT and IRT

Table 10-36 Comparison between RT and IRT

RT class	RT	IRT "high flexibility"	IRT "high performance"
Transmission mode	Switching based on the MAC address; prioritization of the RT telegrams possible using Ethernet-Prio (VLAN tag)	Switching using the MAC address; bandwidth reservation by reserving an IRT "high flexibility" interval in which only IRT "high flexibility" frames are transferred but, for example, no TCP/IP frames.	Path-based switching according to a topology-based plan; no transmission of TCP/IP frames and IRT "high flexibility" frames in the IRT "high performance" interval.
Isochronous application in the IO controller	No	No	Yes
Determinism	Variance of the transmission duration by started TCP/IP telegrams	Guaranteed transmission of the IRT "high flexibility" telegrams in the current cycle by the reserved bandwidth.	Exactly planned transfer; times for transmission and receiving are guaranteed for any topologies.
Reload the network configuration after a change	Not relevant	Only when the size of the IRT "high flexibility" interval needs to be modified (reservation of position is possible).	Always when the topology or the communications relationships change.
Maximum switching depth (number of switches in one line)	10 at 1 ms	61	64
For possible send cycles, see subitem "Send cycles and update cycles for RT classes" in table "Adjustable send cycles and update cycles"			

Set the RT class

The RT class is set by means of the IO controller interface properties. If RT class IRT "high performance" is set, it is not possible to operate any IRT "high flexibility" devices on the IO controller and vice versa. IO devices with RT can always be operated, regardless of the IRT class setting.

You can set the RT class in the HW Config for the associated PROFINET device.

1. In HW Config, double-click item PROFINET interface in the module.
   The "Properties" dialog box opens.
2. Select the RT class under RT class on the "Synchronization" tab.
3. Once you have selected "IRT", you can also choose between option "high flexibility" and "high performance".

   Note

   It is not permissible that the "high flexibility" option is selected for SINAMICS DCM, otherwise an error message is output.

4. Confirm with "OK".

Synchronization domain

The sum of all devices to be synchronized form a synchronization domain. The whole domain must be set to a single, specific RT class (real-time class) for synchronization. Different synchronization domains can communicate with one another via RT.

For IRT, all IO devices and IO controllers must be synchronized with a common synchronization master.

RT allows an IO controller to communicate with a drive unit outside a synchronization domain or "through" another synchronization domain.
From version of 5.4 SP1, STEP 7 supports several synchronization domains in an Ethernet subnet.

Example:

- Synchronization domain IRT: SIMOTION2 with SINAMICS
- SINAMICS, which is assigned to the IO system of SIMOTION1, is arranged in the topology in such a way that its RT communication must be established through the IRT synchronization domain.

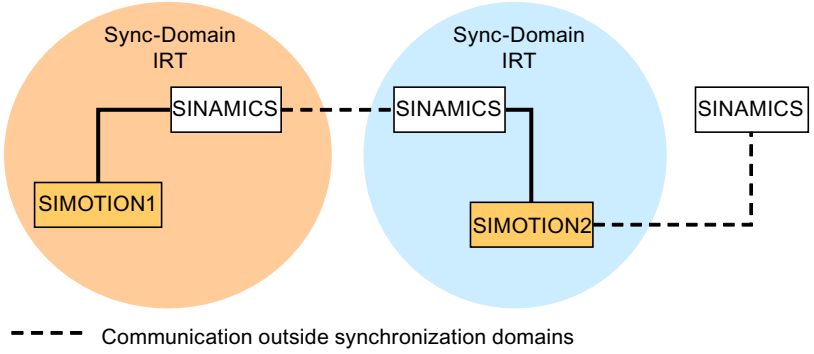

Figure 10-43 RT communication across the limits of synchronization domains

Update cycles and send cycles for RT classes

Definition of the update time / send cycle

If we take a single IO device in the PROFINET IO system as an example, this device has been supplied with new data (outputs) by the IO controller and has transferred new data (inputs) to the IO controller within the update time. The send cycle is the shortest possible update cycle.

All cyclic data is transferred within the send cycle. The actual send cycle that can be set depends on various factors:

- Bus load
- Type of devices used
- Computing capacity available in the IO controller
- Supported send clocks in the participating PROFINET devices of a synchronization domain. A typical send cycle is, e.g. 1 ms.

The table below specifies the reduction ratios which can be set between the send cycle and the update times for IRT "high performance", IRT "high flexibility", and RT.

Table 10-37 Settable send cycles and update cycles

Send cycle		**Reduction ratio between update and send cycles**	
		RT IRT "high flexibility" [4]	**IRT "high performance"**
Range "even"[1]	250, 500, 1000 µs	1, 2, 4, 8, 16, 32, 64, 128, 256, 512	1, 2, 4, 8, 16[2]
	2000 µs	1, 2, 4, 8, 16, 32, 64, 128, 256	1, 2, 4, 8, 16[2]
	4000 µs	1, 2, 4, 8, 16, 32, 64, 128	1, 2, 4, 8, 16[2]
Range "odd" [3]	375, 625, 750, 875, 1125, 1250 µs ... 3875 µs (increment 125 µs)	Not supported [5]	1

Explanations for the previous table:

1) It is only possible to set send cycles from the "even" range when IO devices with RT class "RT" are assigned to a synchronization domain. Likewise, only the reduction ratios from the "even" range can be set for a send cycle setting from the "even" range.

2) It is generally only possible to set a reduction ratio of 1:1 between the update time and send cycle for IO devices (ET200S IM151-3 PN HS, SINAMICS S) which are operated in isochronous mode. In this case, the update time mode must always be set to "fixed factor" (under "I/O device" properties, "IO cycle" tab, "Mode" drop-down menu). This means that STEP 7 will not automatically adjust the update cycle and thus the update cycle will always correspond to the send cycle.

3) The send cycles from the "uneven" range can be set only if a synchronization domain does not include any IO devices with RT class "RT". Likewise, only the reduction ratios from the "uneven" range can be set for a send cycle setting from the "uneven" range.

4) Isochronous operation is not compatible with IRT "high flexibility".

5) Uneven send cycles can be used only if the IO systems assigned to the synchronization domain do not include any RT or IRT "high flexibility" devices.

Furthermore, the send cycles which can actually be set are determined by the intersection of the send cycles supported by all the devices in the synchronization domain.

The reduction ratio between the update cycle of an IO device and the send cycle is set in the "Properties" of the PROFINET interface for the relevant device.

Note

There is no intersection between the send cycles for the "even" and "odd" ranges!

Send cycles for SINAMICS drive units

A SINAMICS drive unit with PROFINET interface which supports IRT permits send cycle settings of between 0.25 ms and 4.0 ms in a 250 µs time frame.

Topology rules

Topology rules for RT

- A topology can be, but need not be configured for RT. If a topology has been configured, the devices must be wired in accordance with the topology.
- Otherwise, the wiring between devices is entirely optional.

Topology rules for IRT

- Mixed operation is not supported by STEP 7 V5.4 SP4, i.e. IRT "high performance" cannot be combined with IRT "high flexibility" in the same synchronization domain.
- A synchronization domain with IRT "high performance" can contain a maximum of one IRT "high performance" island. "Island" means that the devices must be interconnected to match the configured topology. A synchronization master must be positioned in the relevant island.
- IRT "high flexibility" is subject to the same topology rules as IRT "high performance", the only exception being that a topology does not need to be configured. However, if a topology has been configured, the devices must be wired to match the topology.

Device selection in HW Config

Hardware catalog:

The drive unit from the appropriate device family entry in the hardware catalog must be configured.

10.5.5 PROFINET GSDML

As with PROFIBUS, when DriveES is present, the device can be inserted using a DriveES/STARTER interface or using a GSDML file.

The GSDML file is available as a zip archive on the memory card with the current firmware:

`\\Siemens\SINAMICS\DATA\CFG\PNGSD.zip`

See Chapter “Ordering information for options and accessories (Page 32)” for ordering data of the memory card.

Alternatively, the GSDML file can be requested from the Customer Support.

Table 10-38 Submodules depending on the particular drive object

Module	Subslot 1 MAP	Subslot 2 PROFIsafe	Subslot 3 PZD telegram	Subslot 4 PZD extension	Max. number of PZD
DC_CTRL	MAP	-	Telegrams: 1...352 free PZD-16/16, 32/32	PZD-2/2, -2/4, -2/6	64/64
TM31, TM15DI_DO	MAP	Reserved	Telegrams: no free PZD-4/4	Reserved	5/5
TM150	MAP	Reserved	Telegrams: no free PZD-4/4	Reserved	7/7
Control Unit	MAP	Reserved	Telegrams: 390 free PZD-4/4	Reserved	20/25
TM15/TM17	Not supported.				

The telegrams in subslots 2, 3 and 4 can be freely configured, i.e. they can also remain empty.

10.5.6 Communication with CBE20

The CBE20 is a Communication Board that can be flexibly used and which can be operated with different communication profiles. Only one firmware of a communication profile can be loaded at any one time. The available firmware files are saved with the communication profiles in UFW files.

The required file is selected using parameter p8835. A POWER ON must be carried out after selecting the desired UFW file. During the subsequent system boot, the corresponding UFW file is loaded. The new selection then becomes active.

Table 10-39 UFW files and selection in the pointer file

UFW file and folder on the memory card	Functionality (p8835)	Pointer file content
/SIEMENS/SINAMICS/CODE/CB/CBE20_1.UFW	PROFINET device	1
/SIEMENS/SINAMICS/CODE/CB/CBE20_3.UFW	SINAMICS Link	3
/SIEMENS/SINAMICS/CODE/CB/CBE20_4.UFW	EtherNet/IP	4
/SIEMENS/SINAMICS/CODE/CB/CBE20_5.UFW	Modbus TCP	5
/OEM/SINAMICS/CODE/CB/CBE20.UFW	Customized	99

Note

All communication profiles are saved on the memory card. Some communication profiles (UFW files) can also be saved to the flash memory in the device itself. In this case, the memory card does not have to be inserted.
p8835=1 (PROFINET): The memory card does not have to be inserted.
p8835 = 3 (SINAMICS Link): The memory card must remain inserted.
p8835 = 4 (EtherNet/IP): The memory card does not have to be inserted.
p8835 = 5 (Modbus TCP): Memory card must remain inserted.

Identification of the firmware version

Using parameter r8858, the loaded firmware version of the PROFINET interface can be identified uniquely.

Overview of important parameters (see SINAMICS DCM List Manual)

- p8835 CBE20 firmware selection
- r8858[0...39] COMM BOARD read diagnostics channel
- r8859[0...7] COMM BOARD identification data

10.5.7 Messages via diagnostics channels

Messages can be displayed not only via the well-known commissioning tools (STARTER, SCOUT). After the activation of a diagnostic function, the messages are also transferred to the higher-level controller via the standardized diagnostic channels. The messages are evaluated there or forwarded for convenient display at the various user interfaces (SIMATIC HMI, TIA Portal, etc.). The messages are shown on the respective user interfaces similarly as in STARTER.

In this way, problems or faults can be located immediately regardless of the tool currently being used, and then corrected immediately. No further tools must therefore be called for the correction.

Activating the diagnostics function

The diagnostics function is activated or deactivated via the parameterization of the relevant configuration tool (HW Config, TIA Portal, etc.).

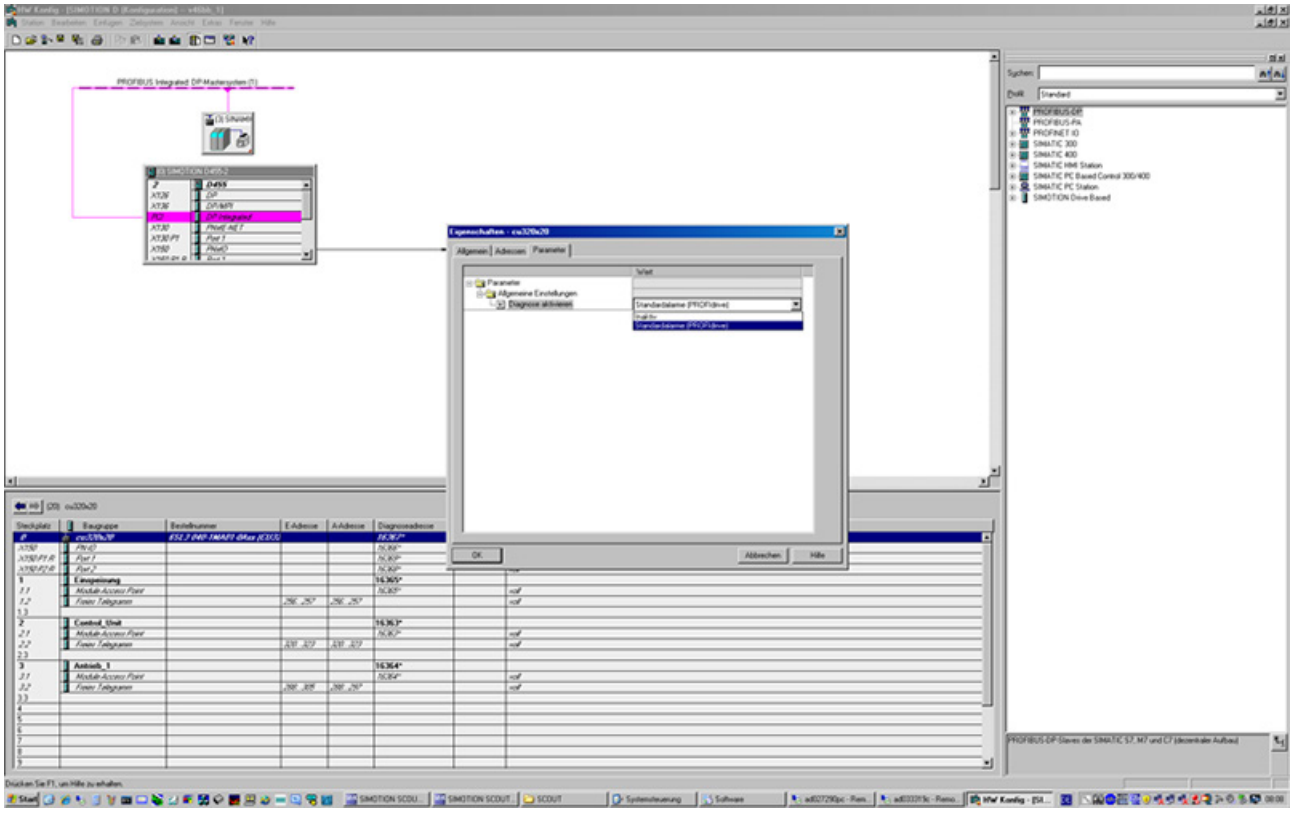

Figure 10-44 Activation of PROFINET

The following parameter assignments are possible:

Setting	Code for parameter assignment
Inactive	0
PROFIdrive error classes	1

When establishing the communication between SINAMICS and a master/controller, the activated diagnostics mode of this master/controller is first transferred to the drive. With activated diagnostics, SINAMICS first transfers all pending messages to the master/controller.

Messages

The following PROFIdrive error texts are displayed during forwarding via the PROFINET diagnostics channel:

Hardware fault/software error

A hardware or software malfunction was detected. Carry out a POWER ON for the relevant component. If it occurs again, contact the hotline.

Line fault

A line supply fault has occurred (phase failure, voltage level, etc.). Check the line supply and fuses. Check the supply voltage. Check the wiring.

Supply voltage fault

An electronics supply voltage fault (48 V, 24 V, 5 V...) was detected. Check the wiring. Check the voltage level.

Power electronics faulted

An impermissible operating state of the power electronics was detected (overcurrent, overtemperature, etc.). Check compliance with the permissible load cycles. Check the ambient temperatures (fan).

Electronic component overtemperature

The temperature in the component has exceeded the highest permissible limit. Check the ambient temperature / control cabinet ventilation.

Ground fault / inter-phase short-circuit detected

A ground fault / inter-phase short-circuit was detected in the power cables or in the motor windings. Check the power cables (connection). Check the motor.

Motor overload

The motor was operated outside the permissible limits (temperature, current, torque, ...). Check the load cycles and set limits. Check the ambient temperature / motor cooling.

Communication error to the higher-level controller

The communication to the higher-level controller (internal coupling, PROFIBUS, PROFINET, etc.) is faulted or interrupted. Check the state of the higher-level controller. Check the communication connection/wiring. Check the bus configuration/cycles.

Actual position value / actual speed value incorrect or not available

An illegal signal state was detected while evaluating the encoder signals (track signals, zero marks, absolute values, etc.). Check the encoder / state of the encoder signals. Observe the maximum permissible frequencies.

Internal (DRIVE-CLiQ) communication error

The internal communication between the SINAMICS components is faulted or interrupted. Check the DRIVE-CLiQ wiring. Ensure an EMC-compliant installation. Observe the maximum permissible quantity structures / cycles.

External measured value / signal state outside the permissible range

A measured value / signal state read-in via the input area (digital/analog/temperature) has assumed an impermissible value/state. Identify and check the relevant signal. Check the set thresholds.

Application / technology function faulted

The application / technological function has exceeded a (set) limit (position, velocity, torque, etc.). Identify and check the relevant limit. Check the setpoint specification of the higher-level controller.

Error in the parameterizing/configuring/commissioning sequence

An error was identified in the parameterization or in a commissioning procedure, or the parameterization does not match the actual device configuration. Determine the exact cause of the error with the commissioning tool, adapt the parameterization or device configuration.

General drive fault

Group fault, determine the exact cause of the fault with the commissioning tool.

Auxiliary unit faulted

The monitoring of an auxiliary unit (incoming transformer, cooling unit, etc.) has detected an illegal state. Determine the exact cause of the error and check the relevant device.

10.5.8 Support of I&M data sets 1...4

Identification & Maintenance (I&M)

I&M data sets contain information for a standardized and simplified identification and maintenance of PROFIBUS/PROFINET devices. I&M data sets 1...4 contain plant-specific information, such as the installation location and date. PROFINET supports I&M data sets 0...4.

I&M data sets 1...3 can be set with the SIMATIC Manager (STEP 7) and also with HW Config (STEP 7).

I&M parameters

Table 10-40 Parameter designation, assignment and meaning

I&M parameter designation	Format	Size/ octets	Initialization	SINAMICS parameters	Meaning
I&M 0: IM_SUPPORTED	-	-	-	r8820[62,63]	The parameter indicates which I&M data sets are supported. The value 0x1E indicates that I&M data sets 1...4 are available.
I&M 1: TAG_FUNCTION	Visible string	32	Space 0x20... 0x20	p8806[0...31]	Text that identifies the function or task of the device.
I&M 1: TAG_LOCATION	Visible string	22	Space 0x20... 0x20	p8806[32...53]	Text that identifies the device location.

I&M parameter designation	Format	Size/ octets	Initialization	SINAMICS parameters	Meaning
I&M 2: INSTALLATION_DATE	Visible string	16	Space 0x20... 0x7E	p8807[0...15]	Text with the date of the installation or the initial commissioning of the device. The following date formats are supported: • YYYY-MM-DD • YYYY-MM-DD hh:mm – YYYY: Year – MM: Month 01...12 – DD: Day 01...31 – hh: Hours 00...23 – mm: Minutes 00...59 The separators between the individual specifications, i.e. hyphen '-', blank ' ' and colon ':', must be entered.
I&M 3: DESCRIPTOR	Visible string	54	Space 0x20... 0x20	p8808[0...53]	Text with any comments or notes.
I&M 4: SIGNATURE	Octet string	54	Space 0x00... 0x00	r8809[0...53]	The parameter is automatically populated by the system, in which case it contains a functional check signature for the change tracking with Safety Integrated. The check signature has the following format: • The first four octets (0...3) contain the content of parameter r9781 index 0: "SI change monitoring checksum (Control Unit)". • The second four octets (4...7) contain the content of parameter r9782 index 0: "SI change monitoring time stamp (Control Unit)". • The remainder (octets 8...53) contains zeroes.

The I&M data sets 1...3 are stored permanently in the parameters p8806...p8808. Essential properties of these 3 parameters:

- They can be displayed in the STARTER expert list.
- The SINAMICS "Reset parameter" (p0976 = 1, p0970 = 1) function does not have any effect on the content of parameters.
- I&M data sets are not changed when the alternative parameter sets are stored or loaded. The transfer of parameter sets between a memory card and non-volatile device memory does not have any effect on the I&M data sets.

Overview of important parameters (see SINAMICS DCM List Manual)

- p8806[0...53] Identification and Maintenance 1
- p8807[0...15] Identification and Maintenance 2

- p8808[0...53] Identification and Maintenance 3
- r8809[0...53] Identification and Maintenance 4

10.6 Communication via SINAMICS Link

10.6.1 Basic principles of SINAMICS Link

A drive unit (with a node number) most frequently comprises a Control Unit with a number of connected drive objects (DOs). SINAMICS Link allows data to be directly exchanged between up to 64 CU320-2 PN or CU320-2 DP Control Units or CUD. All of the participating Control Units must be equipped with a CBE20 in order that SINAMICS Link functions. Possible applications are, for example:

- Torque distribution for n drives
- Setpoint cascading for n drives
- Load distribution of drives coupled through a material web
- Master/device function for infeed units
- Couplings between SINAMICS DCM and SINAMICS S120

Requirements

The following preconditions must be fulfilled to operate SINAMICS Link:

- One CBE20 must be inserted for each drive object.
- The following applies for the CUD:
  - an Advanced CUD must be inserted.
  - the memory card (the device firmware) must be inserted.

Note

Handling the memory card

Information on how to correctly handle the memory card is provided in Chapter "Memory card functions (Page 329)".

It is especially important to note that it is not permissible to insert the card when the device is operational.

Send and receive data

The SINAMICS Link telegram contains 32 indices (0...31) for the process data (PZD1...32). Each PZD is precisely 1 word long (= 16 bits). Indices that are not required are automatically filled with zeros. There is always a fixed assignment between the index and PZD: The index i corresponds to PZD i+1.

Index	0	1	2	3	4	5	6	7	8	9	10	11	12	13	14	15
PZD	1	2	3	4	5	6	7	8	9	10	11	12	13	14	15	16

SINAMICS Link telegram content, Part 1

Index	16	17	18	19	20	21	22	23	24	25	26	27	28	29	30	31
PZD	17	18	19	20	21	22	23	24	25	26	27	28	29	30	31	32

SINAMICS Link telegram content, Part 2

Each transfer cycle, every SINAMICS Link node can send 1 telegram with 32 PZD. Each node receives all of the telegrams that are sent. For each transfer cycle clock, a node can select and process up to 32 PZD from all telegrams that have been received. Single words and double words can be sent and received. You must write double words in two consecutive PZDs.

Limitations:

- In a telegram, a PZD may only be sent and received once. If a PZD occurs more than once in a telegram, then Alarm A50002 or A50003 is output.
- It is not possible to read in your own send data. An appropriate alarm is initiated. The following alarms are possible:
  - A50006: It is parameterized that own data sent can be received. This is not permitted.
  - A50007: The send telegram word is larger than possible in the project.
  - A50008: The receive telegram word is larger than possible in the project.
- The maximum number of PZDs that can be received and sent also depends on the drive object. The number of PZDs that can be evaluated corresponds to communication according to PROFIdrive; however, for SINAMICS Link, it is limited to a maximum of 32 PZDs.
- If, as a result of a project download, parameters of the CBE20 are change, then alarm A08531 is output. In this case, a POWER ON is required to activate the values.

Transmission time

A transmission time of up to 1.5 ms is possible when using SINAMICS Link.

Bus cycle and number of nodes

A maximum of 64 participants can communicate with one another via SINAMICS Link. To do so, set the maximum number of nodes with p8811 (project selection):

Number of participants / project no.	Number of PZD	Bus cycle (ms)
64	16	1 or 2
16	16	0.5
12	24	0.5
8	32	0.5

In the non-synchronized mode, the bus cycle of the SINAMICS Link can be set with p8812[1] to 1000 µs or 2000 µs.

After changing parameter p8811, p8812, p8835 or p8836, carry out a POWER ON to transfer the settings.

10.6.2 Topology

Only a line topology with the following structure is permitted for SINAMICS Link. You must manually set the parameters in the expert lists of the Control Units and drive objects. To do this, use the STARTER commissioning tool.

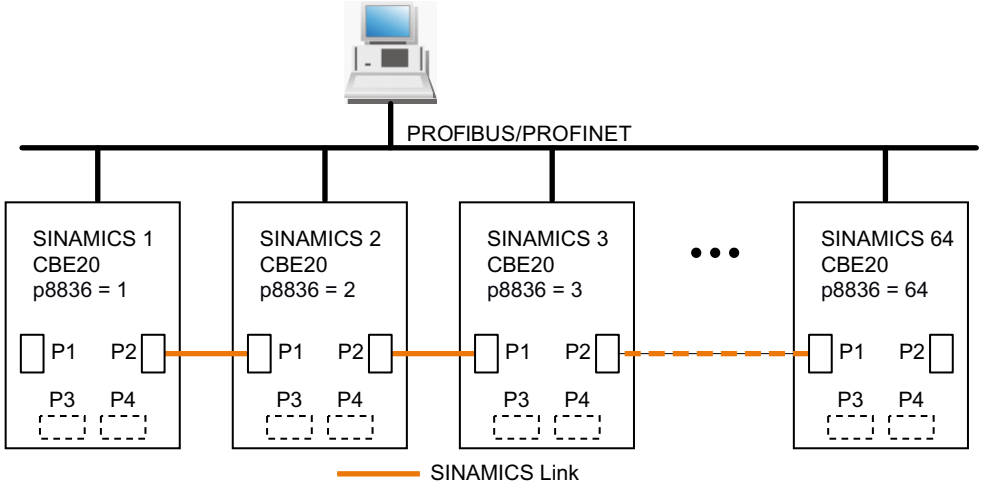

Figure 10-45 Maximum topology

Features

- The CBE20 can be assigned to IF1 or IF2 when SINAMICS Link is used.
  You must also make the following parameter settings in order to assign, e.g. IF1 to SINAMICS Link:
  - For IF1: p8839[0] = 2 (COMM BOARD)
  - For IF2: p8839[1] = 1 (Control Unit onboard)

  The data in the additional description are applicable for the case (IF1 ≙ SINAMICS Link).
- The number of the respective node must be entered manually in parameter p8836. Each node must be assigned a different number. Enter the numbers in ascending order starting with 1.
- If p8836 is set to 0, the nodes and the complete following line is shut down for SINAMICS Link.
- Gaps in the numbering are not permitted, as then SINAMICS Link would not function.
- The node with the number 1 is automatically the sync master of the communication link.
- The ports of the CBE20 must be interconnected strictly in accordance with the previous diagram. You must always connect port 2 (P2) of node n with port 1 (P1) of node n + 1.
- In the "SINAMICS Link" mode, ports 3 and 4 of the CBE20 can only be used to connect to the STARTER commissioning tool or Startdrive.

Corresponding parameters for IF1 or IF2

Use different parameters for configuring, depending on which interface SINAMICS Link is assigned:

Table 10-41 Corresponding parameters

Parameter	IF1	IF2
Setting of the processing mode for PROFIdrive STW1.10 "Control by PLC".	p2037	p8837
Connector output to interconnect the PZD (setpoints) received from the fieldbus controller in the word format.	r2050	r8850
Selects the PZD (actual values) to be sent to the fieldbus controller in the word format.	p2051	p8851
Displays the PZD (actual values) sent to the fieldbus controller in the word format.	r2053	r8853
Connector output to interconnect the PZD (setpoints) received from the fieldbus controller in the double word format.	r2060	r8860
Selects the PZD (actual values) to be sent to the fieldbus controller in the double word format.	p2061	p8861
Displays the PZD (actual values) sent to the fieldbus controller in the double word format.	r2063	r8863

10.6.3 Configuring and commissioning

Note

When using SINAMICS Link, the memory card must remain inserted in the CUD.
p8835 cannot be set to 3 if it is not inserted.

Commissioning

When commissioning, proceed as follows:

1. Set the Control Unit parameter p0009 = 1 (device configuration).
2. Set the Control Unit parameter p8835 = 3 (SINAMICS Link).
3. Using p8839, define which interface should be used (for example for IF1: p8839[0] = 2).
4. If SINAMICS Link is assigned to IF1, set parameter p2037 of the drive objects to 2 (do not freeze setpoints).
   If SINAMICS Link was assigned IF2, then p8837 must be used for the setting.
5. Assign the nodes in parameter p8836 to the SINAMICS Link node number.
   The first Control Unit is always assigned the number 1. Node number 0 means that for this Control Unit SINAMICS Link has been shut down. Observe the specifications under "Topology".
6. Check and/or correct the following parameters:
   - p8811 must be identical for all nodes
   - p8812[1] must be identical for all nodes
   - p8812[0] may be different for local nodes
7. Set the Control Unit parameter p0009 = 0 (ready).
8. Execute a "Copy RAM to ROM".
9. Carry out a POWER ON (switch off the Control Unit and switch on again).

Sending data

Note

The parameters listed in the following description refer to the assignment of SINAMICS Link to IF1. If you assigned SINAMICS Link to IF2, then you find the corresponding parameters in the "Table 10-41 Corresponding parameters (Page 487)".

In this example, the first "Control Unit 1" node has two drive objects: "Drive 1" and "Drive 2". Proceed as follows to send data:

1. If SINAMICS Link is assigned to IF1, then for each drive object, in its associated parameter p2051[0...31], you define which data (PZDs) should be sent.
   If SINAMICS Link was assigned IF2, then p8851 must be used for the setting. The data is simultaneously reserved in the send slot of the p8871[0...31].
2. Enter the double words in p2061[x].
   Double word data is simultaneously written to p8861[0...31].
3. For each drive object, allocate the send parameters in p8871[0...31] to a send slot of its own node.

Table 10-42 Compile send data of drive 1 (DO2)

p2051[x] index	p2061[x] index	Content	From parameter	Telegram word p8871
0	-	ZSW1	r0899	1
-	1	Actual speed value part 1	r0061[0]	2
-		Actual speed value part 2		3
-	3	Actual torque value part 1	r0080	4
-		Actual torque value part 2		5
5	-	Actual fault code	r2131	6
6	-	0	0	0
...	-	...	-	...
15	-	0	0	0
...	-	...	-	...
31	-	0	0	0

Table 10-43 Compile send data of drive 2 (DO3)

p2051[x] index	p2061[x] index	Content	From parameter	Slots in the send buffer p8871[x]	
				x	Telegram word
-	-	-	-	0...5[1)]	0
0	-	ZSW1	r0899	6	7
-	1	Actual speed value part 1	r0061[0]	7	8
-		Actual speed value part 2		8	9
-	3	Actual torque value part 1	r0080	9	10
-		Actual torque value part 2		10	11
5	-	Actual fault code	r2131	11	12
6	-	0	0	12	0
...		...		...	...
15	-	0	0	15	0

p2051[x] index	p2061[x] index	Content	From parameter	Slots in the send buffer p8871[x]	
				x	Telegram word
...	-	...	-	...	...
31	-	0	0	31	0

[1] 0...5 here remain free, as they are already assigned by DO2.

Table 10-44 Compile send data of Control Unit 1 (DO1)

p2051[x] index	p2061[x] index	Content	From parameter	Slots in the send buffer p8871[x]	
				x	Telegram word
-	-	-	-	0...11[2]	0
0	-	Control word, faults/alarms	r2138	12	13
-	1	Missing enables part 1	r0046	13	14
-		Missing enables part 2		14	15
15	-	0	0	15	0
...	-	...	-	...	...
31	-	0	0	31	0

[2] 0...11 here remain free, as they are already assigned by DO2 and DO3.

Send slots PZD 16 to 31 are not required for this telegram and are therefore filled with a zero.

1. For double words (e.g. 1 + 2), assign two consecutive send slots, e.g. p2061[1] => p8871[1] = PZD 2 and p8871[2] = PZD 3.
2. Enter the following PZD into the next parameter slots of p2051[x] or p2061[2x].
3. You must fill the unused slots of p8871[0...31] with zeros.
4. The sequence of the PZDs in the send telegram of this node are defined in parameter p8871[0...31] by the entries in the required slots.

Receiving data

The sent telegrams of all nodes are simultaneously available at the SINAMICS Link. Each telegram has a length of 32 PZD. Each telegram has a marker of the sender. You select those PZD that you want to receive for the relevant node from all telegrams. You can process a maximum of 32 PZD.

Note

If you have not deactivated the evaluation of bit 10 with p2037 = 2, the first word of the receive data (PZD 1) must be a control word, where bit 10 = 1 is set.

In this example, Control Unit 2 receives selected data from the telegram of Control Unit 1. Proceed as follows to receive data:

1. In parameter p8872[0...31] enter the address of the node for which you want to read one or more PZDs (e.g. p8872[3] = 1 → from node 1, read in PZD 4, p8872[15] = 0 → do not read in PZD 16).
2. After setting the parameters, using parameter r2050[0...31] or r2060[0...31] you can read out the values.

Table 10-45 Receive data for Control Unit 2

From the sender		Receiver					
Transfer from	Tel. word[1] p8871[x]	Address p8872[x]	Receive buffer p8870[x]	Data transferred in		Parameter	Content
				r2050[x]	r2060[x]		
p2051[0]	0	1	PZD 1	0	-	r0899	ZSW1
p2061[1]	1	1	PZD 2	-	1	r0061[0]	Actual speed value part 1
	2	1	PZD 3	-		r0061[0]	Actual speed value part 2
p2061[3]	3	1	PZD 4	-	3	r0080	Actual torque value part 1
	4	1	PZD 5	-			Actual torque value part 2
p2051[5]	5	1	PZD 6	5	-	r2131	Actual fault code
p2051[4]	6	1	PZD 7	6	-	r0899	ZSW1
p2061[5]	7	1	PZD 8	-	7	r0061[0]	Actual speed value part 1
	8	1	PZD 9	-			Actual speed value part 2
p2061[6]	9	1	PZD 10	-	9	r0080	Actual torque value part 1
	10	1	PZD 11	-			Actual torque value part 2
p2051[7]	11	1	PZD 12	11	-	r2131	Actual fault code
p2051[8]	12	1	PZD 13	12	-	r2138	Control word, faults/alarms
p2061[9]	13	1	PZD 14	-	13	r0046	Missing enables part 1
	14	1	PZD 15	-			Missing enables part 2
-	15	0	PZD 16	15	-	0	Empty
...	...	...	...	...	...	...	...
-	31	0	PZD 32	31	0	0	-

[1] Tel.word = telegram word

Note

For double words, two PZD must be read in succession. To do this, read in a 32 bit setpoint, which is on PZD 2 + PZD 3 of the telegram of node 2. Map this setpoint to PZD 2 + PZD 3 of participant 1: p8872[1] = 2, p8870[1] = 2, p8872[2] = 2, p8870[2] = 3

Activating SINAMICS Link

To activate SINAMICS Link connections, perform a POWER ON for all nodes.

Without POWER ON, the following can be changed:

- The assignments of p2051[x]/2061[2x] and the links of the read parameters r2050[x]/ 2060[2x]
- Parameters p8870, p8871, and p8872 In this case, the SINAMICS Link connections can also be connected via p8842 = 1.

10.6.4 Example

Task

Configure SINAMICS Link for two nodes and transfer the following values:

- Send data from node 1 to node 2
  - r0898 CO/BO: Control word, sequence control, drive 1 (1 PZD), in the example PZD 1
  - r0079 CO: Total torque setpoint (2 PZD), in the example PZD 2
  - r0021 CO: Smoothed actual speed (2 PZD), in the example PZD 3
- Send data from node 2 to node 1
  - r0899 CO/BO: Status word, sequence control, drive 2 (1 PZD), in the example PZD 1
- IF1 is used for SINAMICS Link.

Procedure

1. For all nodes, set p0009 = 1 to change the device configuration.
2. For all CBE20 nodes, set the "SINAMICS Link" mode using p8835 = 3.
3. Limit the maximum number of nodes for all nodes with p8811 = 8. By setting p8811, parameter p8812[1] is preassigned, and parameter p8836, if necessary, is corrected.
4. Assign the node numbers for the devices involved:
   - Node 1 (≙ device 1): p8836 = 1
   - Node 2 (≙ device 2): p8836 = 2
5. Make the following interface setting for all nodes:
   - For IF1: p8839[0] = 2 (COMM BOARD)
   - For IF2: p8839[1] = 1 (Control Unit onboard)
6. For both nodes p0009 = 0, carry out a "Copy RAM to ROM" followed by a POWER ON in order to activate the modified firmware versions and the new settings in the CBE20.

7. Define the send data for node 1:
   - Define the PZD that node 1 should send:
     p2051[0] = drive1:r0898 (PZD 1)
     p2061[1] = drive1:r0079 (PZD 2 + PZD 3)
     p2061[3] = drive1:r0021 (PZD 4 + PZD 5)
   - Place these PZD in the send buffer (p8871) of node 1:
     p8871[0] = 1 (r0898)
     p8871[1] = 2 (r0079 1st part)
     p8871[2] = 3 (r0079 2nd part)
     p8871[3] = 4 (r0021 1st part)
     p8871[4] = 5 (r0021 2nd part)
8. Define the receive data for node 2:
   - Specify that the data placed in the receive buffer p8872 of node 2 in locations 0 to 4 will be received by node 1:
     p8872[0] = 1
     p8872[1] = 1
     p8872[2] = 1
     p8872[3] = 1
     p8872[4] = 1
   - Specify that PZD1, PZD2, and PZD3 of node 1 will be placed in the receive buffer p8870 of node 2 in locations 0 to 4:
     p8870[0] = 1 (PZD1)
     p8870[1] = 2 (PZD2 1st part)
     p8870[2] = 3 (PZD2 2nd part)
     p8870[3] = 4 (PZD3 1st part)
     p8870[4] = 5 (PZD3 2nd part)
   - r2050[0], r2060[1] and r2060[3] subsequently contain (after step 13) the values of PZD 1, PZD 2 and PZD 3 of node 1.
9. Define the send data for node 2:
   - Specify the PZD that node 2 should send:
     p2051[0] = drive1:r0899 (PZD length is 1 word)
   - Place this PZD in the send buffer (p8871) of node 2:
     p8871[0] = 1
10. Define the receive data for node 1:
   - Specify the data that should be placed in the receive buffer p8872 of node 1 in location 0, received from node 2:
     p8872[0] = 2
   - Define that PZD1 of node 2 is saved in the receive buffer p8870 of node 1 in location 0:
     p8870 [0] = 1
   - r2050[0] subsequently contains (after step 13) the value of PZD 1 of node 2.
11. At the two nodes carry-out a "Copy RAM to ROM" to backup the parameterization and the data.
12. Set p8842 =1 to activate parameters p8870, p8871 and p8872.

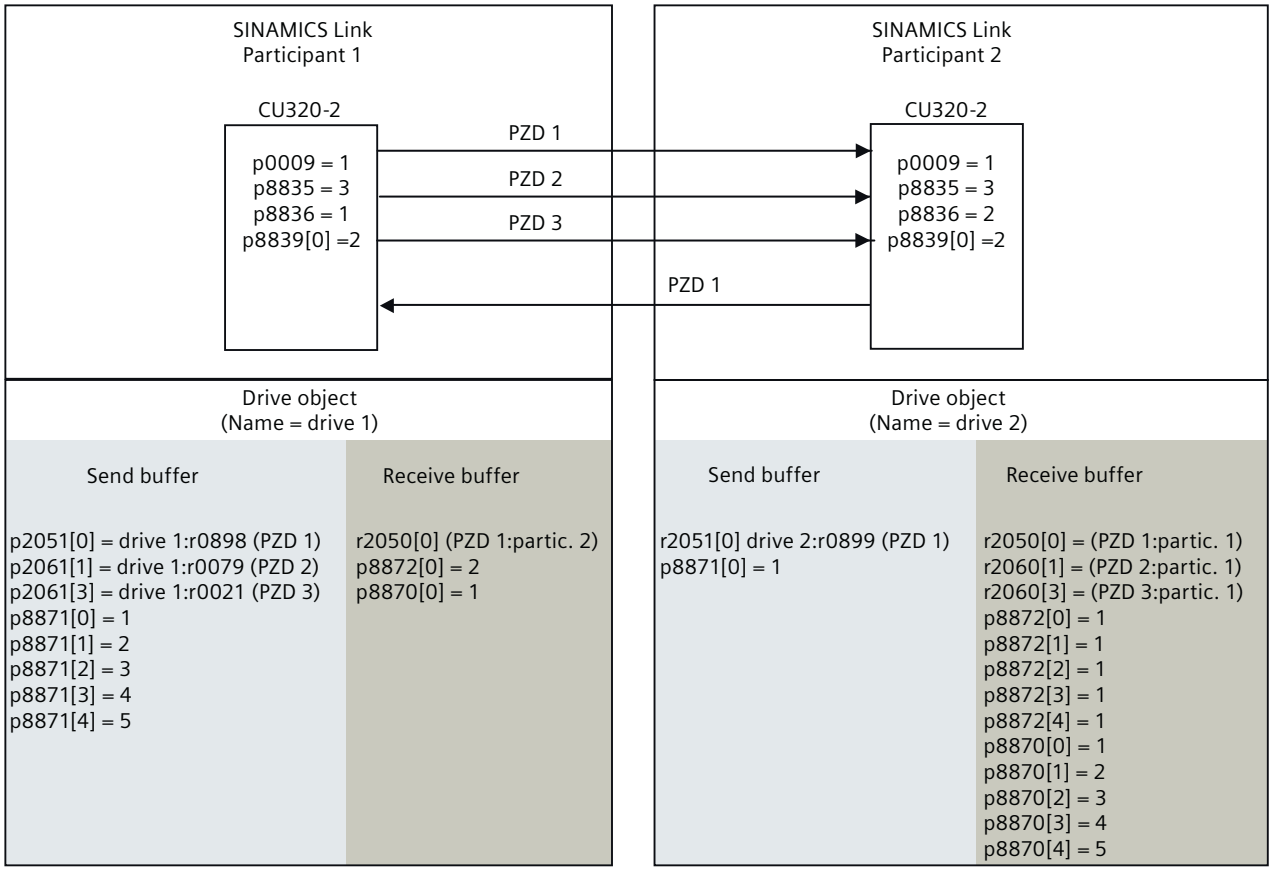

r0021: Speed actual value smoothed
r0079: Total torque setpoint
r0898: Control word sequence control drive 1
r0899: Status word sequence control drive 2

Figure 10-46 SINAMICS Link: Configuration example

10.6.5 Communication failure when booting or in cyclic operation

If at least one sender does not correctly boot after commissioning or fails in cyclic operation, then alarm A50005 is output to the other nodes: “Sender was not found on SINAMICS Link”. The message contains the number of the faulted node. After you have resolved the fault at the node involved and the system has identified the node, the system automatically withdraws the alarm.

If several nodes are involved, the message occurs a multiple number of times consecutively with different node numbers. After you have resolved all of the faults, the system automatically withdraws the alarm.

When a node fails in cyclic operation, in addition to alarm A50005, fault F08501 is output: "COMM BOARD: Monitoring time, process data expired"

At node 1, fault F08501 is not triggered. This node should be used for specifying setpoint values to other nodes.

10.6.6 Examples: Transmission times for SINAMICS Link

Example 1: Transmission times at a communication cycle of 1 ms

p2048 or p8848 = 1 ms

Bus cycle [ms]	Transmission time [ms]			
	Sync both	Sync send	Sync receive	Async both
0.5 *)	1.0	1.5	1.3	1.6
1.0	1.5	2.1	2.1	2.2
2.0	3.0	3.6	3.1	2.8

Example 2: Transmission times at a communication cycle of 4 ms

p2048 or p8848 = 4 ms

Bus cycle [ms]	Transmission time [ms]			
	Sync both	Sync send	Sync receive	Async both
0.5 *)	1.0	3.0	2.8	4.6
1.0	1.5	3.6	3.6	5.2
2.0	3.0	5.1	4.6	5.8

*) Only possible for SINAMICS S120/S150.

10.6.7 Function diagrams and parameters

Function diagrams (see SINAMICS DCM List Manual)

- 2197 Control Unit communication - SINAMICS Link overview (r0108.31 = 1, p8835 = 3)
- 2198 Control Unit communication - SINAMICS Link configuration (r0108.31 = 1, p8835 = 3)
- 2199 Control Unit communication - SINAMICS Link receive data (r0108.31 = 1, p8835 = 3)
- 2200 Control Unit communication - SINAMICS Link send data (r0108.31 = 1, p8835 = 3)

Overview of important parameters (see SINAMICS DCM List Manual)

- p0115[0] Sampling time for additional functions
- p2037 IF1 PROFIdrive STW1.10 = 0 mode
- r2050[0...31] CO: IF1 PROFIdrive PZD receive word
- p2051[0...31] CI: IF1 PROFIdrive PZD send word
- r2060[0...30] CO: IF1 PROFIdrive PZD receive double word
- p2061[0...30] CI: IF1 PROFIdrive PZD send double word

- p8811 SINAMICS Link project selection
- p8812[0...1] SINAMICS Link cycle settings
- p8835 CBE20 firmware selection
- p8836 SINAMICS Link node address
- p8839[0...1] PZD interface hardware assignment
- p8870[0...31] SINAMICS Link PZD receive word
- p8871[0...31] SINAMICS Link PZD send word
- p8872[0...31] SINAMICS Link PZD receive address

10.7 Communication via EtherNet/IP (EIP)

EtherNet/IP (EIP) is a realtime Ethernet, and is mainly used in automation technology.

The EtherNet Industrial Protocol (EtherNet/IP) is an open standard for industrial networks. It is used to transmit cyclic I/O data and acyclic parameter data. EtherNet/IP was developed by Rockwell Automation and the Open Device-Net Vendor Association (ODVA), and standardized in the series of international IEC 61158 standards. EtherNet/IP uses the basis technology of Ethernet TCP/IP, which has been well proven in practice. Ethernet twisted-pair cables or fiber-optic cables are used as data transmission medium.

For communication with EtherNet/IP, an Ethernet CBE20 Communication Board is required. By setting p8835 = 4, you can choose the communication profile EtherNet/IP. After POWER ON, the profile becomes active.

10.7.1 Components to connect SINAMICS DCM to EtherNet/IP

To connect the DC drive (left-hand CUD) to EtherNet/IP, SINAMICS DCM must be ordered with the following options:

- G00: (Advanced CUD in the left-hand slot)
- G20: (CBE20 PROFINET, left possible with option G00)

The following options are required to connect an additional CUD (right-hand CUD) to EtherNet/IP:

- G11 (Advanced CUD in right-hand slot, possible with option G00)
- G21 (CBE20 PROFINET right-hand, possible with G11)

See Chapter “Ordering information for options and accessories (Page 32)” for ordering data.

For additional information on the CBE20 Communication Board Ethernet, see Chapter "Additional system components (Page 169)".

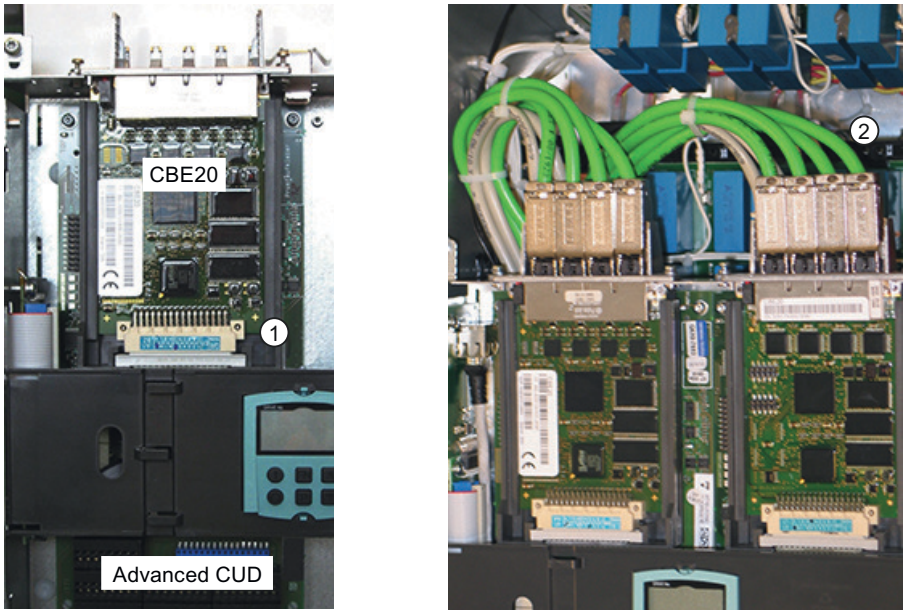

Picture left: Communication Board Ethernet CBE20 inserted in the option module slot ① of an Advanced CUD

Picture right: Maximum configuration with two CBE20. 4 Ethernet cables ② for each CBE20.

Figure 10-47 CBE20

10.7.2 Configuration of SINAMICS DCM for EtherNet/IP

Requirements

- Advanced CUD
- CBE20

SINAMICS DCM for EtherNet/IP is configured via STARTER or by directly entering parameters at the BOP.

Carry out the following steps to communicate with a higher-level control system via EtherNet/IP:

1. Switch on the line supply and the 24 V supply of the SINAMICS DCM, and wait until run-up has been completed.
2. Using STARTER or the BOP, switch to drive object CU_DC.
3. Activate the device configuration by setting p0009 = 1.
4. With p8835 = 4, set the firmware version "EtherNet/IP".
5. Set the IP address for the CBE20 using p8941. You can find the currently valid address in r8951.
6. Set the subnet mask using p8943. You can find the currently valid subnet mask in r8953.
7. Set the standard gateway using p8942. You can find the currently valid standard gateway in r8952.

8. Set the station name using p8940. You can find the currently valid station name in r8950. This setting is not absolutely necessary for operation with EtherNet/IP; however, it can be necessary in conjunction with DHCP.
9. Accept and activate the settings by setting p8945 = 2.
10. Complete the device configuration with p0009 = 0.
11. Save the data using command "Copy RAM to ROM".
12. Switch off the line supply and the 24 V supply of the SINAMICS DCM. Wait until all LEDs on the SINAMICS DCM are dark before switching on.
13. Switch on the line supply and the 24 V supply of the SINAMICS DCM again. There settings are active once running-up has been completed.

In addition to directly entering the IP address, it is also possible to retrieve this via DHCP.

1. Set the required DHCP mode using p8944 (CBE2x DHCP mode):

Parameterization	Meaning
p8944 = 2	The DHCP server assigns the IP address based on the MAC address
p8944 = 3	The DHCP server assigns the IP address based on the station name

2. Save the settings with p8945 = 2.
   The next time the drive runs up, it retrieves the IP address from the DHCP server. After the drive has run-up, you can address the drive as Ethernet participant.

Note

Immediate switchover without restart

The switchover to DHCP is performed immediately and without a restart if the change is carried out with the EtherNet/IP command "Set Attribute Single" (TCP/IP Interface Object / Class code F5 hex, attribute 3), e.g. using an EtherNet/IP control or a commissioning tool.

Note

When DHCP (p8944 ≠ 0) is activated, PROFINET communication via CBE20 is not possible. As a consequence, DHCP must be deactivated before switching over the interface to PROFINET.

10.7.3 EtherNet/IP communication with the SINAMICS DCM

The EtherNet/IP communication with SINAMICS DCM is possible using the following connection types:

- Implicit (I/O) messaging
  for cyclic I/O or process data (setpoints, actual values, control and status words)
- Explicit messaging
  for acyclic message requirements

For communication via EtherNet/IP, SINAMICS DCM supports the following CIP objects:

Class code (hex)	Class code	Object name
001 hex	1	Identity object
004 hex	4	Assembly object
006 hex	6	Connection Manager object
0F5 hex	245	TCP/IP Interface Object [1]
0F6 hex	246	Link Object [1]
32C hex	812	Siemens Drive Object (reading and writing certain device parameters)
401 hex ... 43E hex	1025 ... 1086	Parameter object (General reading and writing of device parameters)

[1] These objects are part of the EtherNet/IP system management

The communication types and objects that are supported are described in more detail in the following.

10.7.3.1 "Implicit messaging" – cyclic communication as I/O slave

Assembly object (Class Code 4 hex) is used for cyclic communication.

As standard, the SINAMICS DCM as I/O device exchanges cyclic process data (PZDs) with a PLC or another control system.

Cyclic information, such as control words, status words, actual values and setpoints, are called process data.

The following I/O assembly settings must be made (from the PLC perspective):

Assembly	Content	Description
101	Receive data	Total length of the receive data in bytes (= 2x number of receive PZD)
102	Send data	Total length of the send data in bytes (= 2x number of send PZD)
103	Configuration data	Length 0 bytes

In addition, the cycle time of the data transfer - the RPI (Requested Packet Interval) - must be additionally defined in the PLC. 4 ms is supported as the minimum value.

PZD are transferred as words (16 bit integer).

The data length for the assemblies of the receive and send data correspond to the total number of PZD for all drive objects:

- Example 1:

Drive object (DO)	Number of PZD in the send direction	Number of PZD in the receive direction
DC_CTRL (drive)	10	10
CU_DC	2	2
Total data length	12 words = 24 bytes	12 words = 24 bytes

- Example 2:

Drive object (DO)	Number of PZD in the send direction	Number of PZD in the receive direction
DC_CTRL (drive)	10	5
CU_DC	0	0
TM31	1	1
Total data length	11 words = 22 bytes	6 words = 12 bytes

The highest PZD of a drive object, whose data is sent or received in an assembly, must be connected with the data source or data sink via BiCO technology.

In example 1, PZD 10 of drive object DC_CTRL and PZD 2 of the drive object CU_DC must have an active BiCO interconnection in the receive and send directions.

The highest interconnected PZD is displayed separately in r2067 (IF1) or r8867 (IF2) of a drive object for the receive direction (index 0) and send direction (index 1).

In example 1, the total length of the send data can be calculated based on this parameter:

- DO DC_CTRL: r2067[1] = 10
- DO CU_DC: r2067[1] = 2

In total, 12 PZD or 24 bytes are obtained in the send direction.

Note

For a firmware release < 1.5, the assembly must be manually created by setting p8842 = 1 on the CU_DC.

If the change is to be permanent, copy RAM to ROM.

The sequence in which the drive object data is arranged, depends on the communication settings of the SINAMICS DCM.
The position of the data in the assembly can be set in the STARTER window "Telegram configuration":

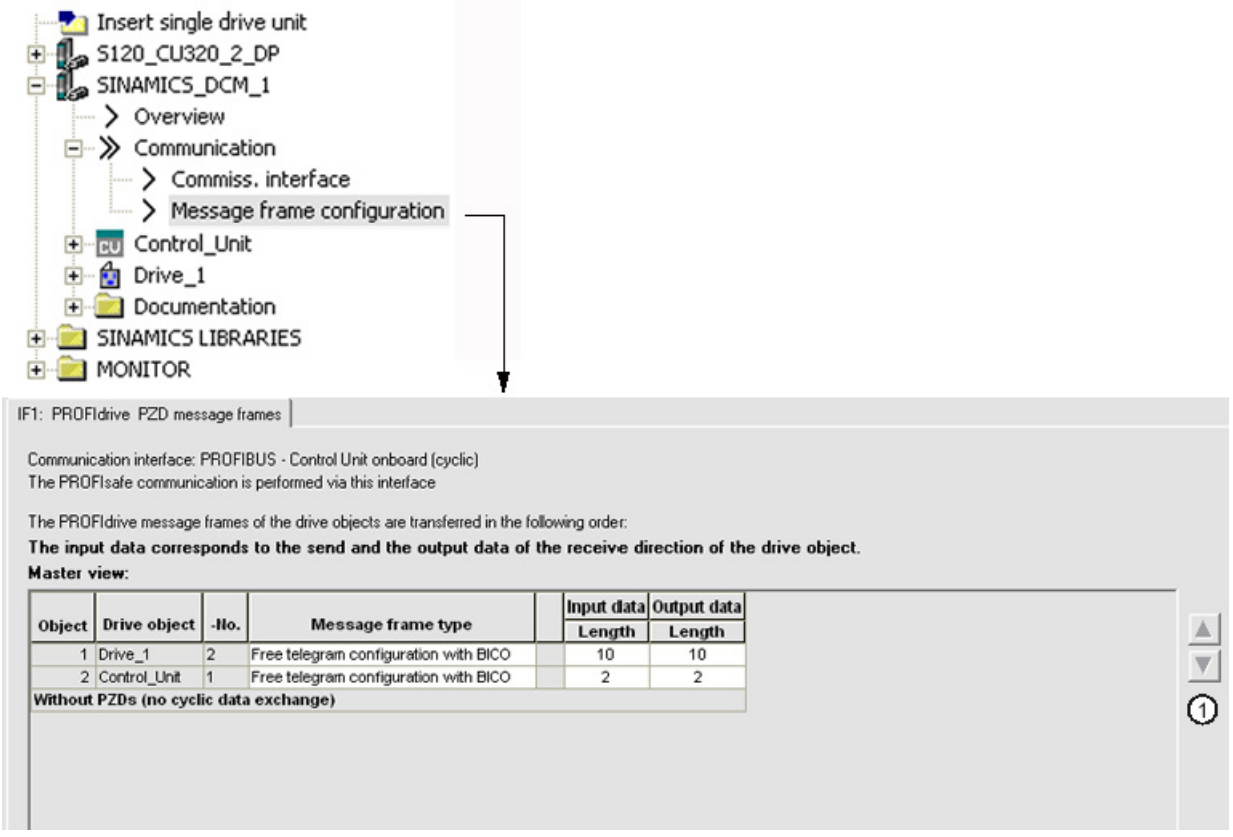

Figure 10-48 Changing the sequence of the drive objects

The sequence can only be changed offline, using the right arrow (①).
For the change to take effect, it must be subsequently downloaded from the PG/PC to the SINAMICS DCM.

Note

If the constraints described for the communication are not complied with, then alarm A50011 "EtherNetIP/COMM BOARD; configuration error" is output.

Description of the Assembly Object

Table 10-46 Assembly Object – supported services

Environment	Service
Class	Get Attribute single
Instance	Get Attribute single
	Set Attribute single

Table 10-47 Assembly Object – Class Attributes

Attribute ID	Service	Type	Name
1	get	UINT16	Revision
2	get	UINT16	Max Instance
3	get	UINT16	Num of Instances

Table 10-48 Assembly Object – Instance Attributes

Attribute ID	Service	Type	Name	Value	Description
3	get	UINT8[]	Assembly	...	1 byte array

10.7.3.2 "Explicit messaging" – acyclic or event-driven communication

Using this communication type, when requested by the SINAMICS DCM, data can be read or transferred there.

Identity Object, Class code 1 hex

The Identity Object allows basic information to be queried about the device, for example, the serial number and the product name.

Table 10-49 Identity Object – supported services

Environment	Service
Class	Get Attribute all
	Get Attribute single
Instance	Get Attribute all
	Get Attribute single
	Reset

Table 10-50 Identity Object – Class Attributes

Attribute ID	Service	Type	Name
1	get	UINT16	Revision
2	get	UINT16	Max Instance
3	get	UINT16	Num of Instances

Table 10-51 Identity Object – Instance Attributes

Attribute ID	Service	Type	Name	Value	Description
1	get	UINT16	Vendor ID	1251	Siemens
2	get	UINT16	Device Type	0x0C	Siemens Drive
3	get	UINT16	Product Code	5480	CU_DCP r0964[1]

Attribute ID	Service	Type	Name	Value	Description
4	get	Struct of	Revision	-	-
5	get	WORD	Status	...	See the following table
6	get	UINT32	Serial number	...	Bit 0 ... 19: Consecutive number Bits 20 ...23: Production day Bits 24 ... 27: Month of manufacture (0 = Jan, B = Dec) Bits 28 ... 31: Year of manufacture (0 = 2002)
7	get	SHORT_STRING	Product Name	SINAMICS DCM	Max. length 32 bytes

Table 10-52 Identity Object – explanation of Instance Attribute ID 5 of the previous table

Byte	Bit	Name	Description
1	0	Owned	0: Converter is not assigned to a controller 1: Converter is assigned to a controller
	1	-	Reserved
	2	Configured	0: Ethernet/IP basic settings 1: modified Ethernet/IP settings
	3	-	Reserved
	4 ... 7	Extended Device Status	0: Self-test or status not known 1: Firmware update active 2: At least one I/O connection with error 3: No I/O connections 4: Incorrect configuration in the ROM 5: Fatal fault 6: At least one I/O connection is active 7: All I/O connections in the quiescent state 8 ... 15: Reserved
2	8 ... 11	-	not used
	12 ... 15	-	Reserved

Siemens Drive Object, Class code 32C hex

Using the Siemens Drive Object, a defined subset of the parameters of all drive objects (DO) of the SINAMICS DCM can be read out (get) and changed (set).
Drive objects of the SINAMICS DCM are accessed via the instance ID and the position of the drive object in the sequence of the telegram configuration, i.e. instance ID corresponds to the entry under "Object" of the drive object in the STARTER window "Telegram configuration".

Parameter Object (Class codes 401 hex ... 43E hex) should always be used for reading and writing drive objects; in contrast to the Siemens Drive Object, it allows all parameters of the drive object to be accessed.

Table 10-53 Siemens Drive Object - supported services

Environment	Service
Class	Get Attribute single
Instance	Get Attribute single
	Set Attribute single

Table 10-54 Siemens Drive Object – Class Attributes

Attribute ID	Service	Type	Name
1	get	UINT16	Revision
2	get	UINT16	Max Instance
3	get	UINT16	Num of Instances

The following table describes the available attributes and/or the parameters of the drive objects. It should be noted that some attributes are not supported by all drive devices.

Table 10-55 Siemens Drive Object – Instance Attributes

Attribute ID	Service	Name	Description	Comment
2	get, set	Commissioning state	p0010 Commissioning parameter filter	Only for drive objects DC_CTRL, TM15 DI/DO, TM31, TM150
3 ... 18	get	STW1	r2090[0] (r2050[0] bit-by-bit) STW1 bit-by-bit access Attribute ID 3 = STW1.0 ... Attribute ID 18 = STW1.15	
20 ... 35	get	ZSW1	r2089[0] ZSW1 bit-by-bit access Attribute ID 20 = ZSW1.0 Attribute ID 35 = ZSW1.15	
36	get, set	Actual frequency	r0063 Main actual value (actual frequency)	Only for drive object DC_CTRL
43	get, set	PID Enable	p2200[0] Technology controller enable	Only for drive object DC_CTRL
44	get, set	PID Filter Time Constant	p2265 Technology controller actual value filter time constant	Only for drive object DC_CTRL
45	get, set	PID D Gain	p2274 Technology controller differentiation time constant	Only for drive object DC_CTRL
46	get, set	PID P Gain	p2280 Technology controller proportional gain	Only for drive object DC_CTRL
47	get, set	PID I Gain	p2285 Technology controller integral time	Only for drive object DC_CTRL
48	get, set	PID Up Limit	p2291 Technology controller maximum limiting	Only for drive object DC_CTRL
49	get, set	PID Down Limit	p2292 Technology controller minimum limiting	Only for drive object DC_CTRL
50	get, set	Speed setpoint	r0020 Speed setpoint smoothed	Only for drive object DC_CTRL
54	get	Actual Current	r0027 Reactor absolute actual current smoothed	Only for drive object DC_CTRL
60	get	CDS Eff (Local Mode)	r0050 Command data set CDS effective	Only for drive object DC_CTRL

Attribute ID	Service	Name	Description	Comment
61	get	Status Word 2	r2089[1] binector-connector converter Send status word, status word 2	
62	get	Control Word 1	r0898 Control word sequence control	Only for drive object DC_CTRL
63	get	Motor speed (encoder)	r0061[0] Speed actual value unsmoothed	Only for drive object DC_CTRL
70	get	Fault Code 1	r0947[0] Fault number 1	
71	get	Fault Code 2	r0947[1] Fault number 2	
72	get	Fault Code 3	r0947[2] Fault number 3	
73	get	Fault Code 4	r0947[3] Fault number 4	
74	get	Fault Code 5	r0947[4] Fault number 5	
75	get	Fault Code 6	r0947[5] Fault number 6	
76	get	Fault Code 7	r0947[6] Fault number 7	
77	get	Fault Code 8	r0947[7] Fault number 8	
79	get	Alarm Code 1	r2110[0] Alarm number 1	
80	get	Alarm Code 2	r2110[1] Alarm number 2	
81	get	Alarm Code 3	r2110[2] Alarm number 3	
82	get	Alarm Code 4	r2110[3] Alarm number 4	

Parameter Object, Class codes 401 hex ... 43E hex

Using Parameter Object, it is possible to write to any parameter of the addressed drive object (get) or to read any parameter of the addressed drive object (set).

Table 10-56 Parameter Object – supported services

Environment	Service
Class	Get Attribute single
Instance	Get Attribute single
	Set Attribute single

Table 10-57 Parameter Object – Class Attributes

Attribute ID	Service	Type	Name
1	get	UINT16	Revision
2	get	UINT16	Max Instance
3	get	UINT16	Num of Instances

Parameters of the drive objects are accessed via Class code, Instance ID and Instance Attribute:

Class code: The Class code corresponds to 400 hex + <Drive object No.>

The drive object No. can be taken from column "(Drive object) No." in the STARTER "Telegram configuration" window.

For example,

Class code 401 hex:	Drive object 1
Class code 402 hex:	Drive object 2
...	...
Class code 43E hex:	Drive object 62

Instance ID: The parameter No. is transferred in the Instance ID.

For example, access to r50001 ⇒ Instance ID = 50001

(Instance) attribute: Parameter indices are transferred as Instance Attributes.

For example, access to r52051[2] ⇒ Instance Attribute = 2

Generally, the following applies:

- Drive object No. 1 = CU_DC ⇒ Class code 401 hex
- Drive object No. 2 = DC_CTRL ⇒ Class code 402 hex

Example:Read parameter r50013[4] (temperature control module CUD) from DO 2 (in this case, DC_CTRL)

Service "Get Attribute single" with the following values:

EtherNet/IP task	Value	Comment
Class code	402 hex	Drive object 2 (default: DC_CTRL)
Instance ID	50013	Parameter r50013: Temperature sensor/module
Instance Attribute	4	Index 4: Temperature, Control module CUD

Example:Write to p0009 (device commissioning parameter filter) in DO 1 (in this case, CU_DC)

Service "Set Attribute single" with the following values:

EtherNet/IP task	Value	Comment
Class code	401 hex	Drive object 1 (default: CU_DC)
Instance ID	9	Parameter p0009: device commissioning parameter filter
Instance Attribute	0	No index
Data	1	Parameter value: [1] device configuration

The data type of the parameter, and therefore the representation in the user data of the parameter object, is specified by the drive and can be found in the SINAMICS DCM List Manual (Chapter "List of parameters").

Note

For write access, the number of user data bytes must correspond to the parameter data width.

Otherwise, the write request is rejected.

Examples:

- Precisely 2 bytes must be transferred for a parameter, data type Integer16 (e.g. P0010).
- Precisely 4 bytes must be transferred for a parameter, data type FloatingPoint32.

Other supported objects

Connection Management Object, Class code 6 hex

Table 10-58 Connection Management Object – supported services

Environment	Service
Class	Get Attribute all
	Get Attribute single
Instance	Forward open
	Forward close
	Get Attribute all
	Get Attribute single

Table 10-59 Connection Management Object – Class Attributes

Attribute ID	Service	Type	Name
1	get	UINT16	Revision
2	get	UINT16	Max Instance
3	get	UINT16	Num of Instances

Table 10-60 Connection Management Object – Instance Attributes

Attribute ID	Service	Type	Name	Value	Description
1	get	UINT16	Open Requests	...	Counters
2	get	UINT16	Open Format Rejects	...	Counters
3	get	UINT16	Open Resource Rejects	...	Counters
4	get	UINT16	Open Other Rejects	...	Counters
5	get	UINT16	Close Requests	...	Counters

Attribute ID	Service	Type	Name	Value	Description
6	get	UINT16	Close Format Requests	...	Counters
7	get	UINT16	Close Other Requests	...	Counters
8	get	UINT16	Connection Timeouts	...	Counters Number of bus errors

TCP/IP Interface Object, Class code F5 hex

Table 10-61 TCP/IP Interface Object – supported services

Environment	Service
Class	Get Attribute all
	Get Attribute single
Instance	Get Attribute all
	Get Attribute single
	Reset

Table 10-62 TCP/IP Interface Object – Class Attributes

Attribute ID	Service	Type	Name
1	get	UINT16	Revision
2	get	UINT16	Max Instance
3	get	UINT16	Num of Instances

Table 10-63 TCP/IP Interface Object – Instance Attributes

Attribute ID	Service	Type	Name	Value/explanation
1	get	UNIT32	Status	Fixed value: 1 hex 1: Configuration acknowledged, by DHCP or saved values
2	get	UNIT32	Configuration Capability	Fixed value: 94 hex 4 hex: DHCP supported, 10 hex: Configuration can be adjusted, 80 hex: ACD-capable
3	get, set	UNIT32	Configuration Control	1 hex: Saved values 3 hex: DHCP
4	get	UNIT16	Physical Link	Path size (in WORDs) Fixed value: 2 hex
		UNIT8		Path 20 hex, F6hex, 24hex, 5 hex, whereby 5 hex is the number of instances of F6 hex (for physical ports plus one internal port).

Attribute ID	Service	Type	Name	Value/explanation
5	get, set	STRING	Interface Configuration	r61000 Name of Station
		UNIT32		r61001 IP address
6	get, set	UNIT16	Host Name	Host Name Length
		STRING		-
10	get, set	UNIT8	Select ACD	local OM flash: 0: Disabled, 1: Enabled
11	get, set	UNIT8	Last Conflict Detected	local OM flash ACD Activity
		UNIT8		local OM flash Remote MAC
		UNIT8		local OM flash ARP PDU

Link Object, Class code F6 hex

Table 10-64 Link Object – supported services

Environment	Service
Class	Get Attribute all
	Get Attribute single
Instance	Get Attribute all
	Get Attribute single
	Reset

Table 10-65 Link Object – Class Attributes

Attribute ID	Service	Type	Name
1	get	UINT16	Revision
2	get	UINT16	Max Instance
3	get	UINT16	Num of Instances

Table 10-66 Link Object – Instance Attributes

Attribute ID	Service	Type	Name	Value/explanation
1	get	UINT32	Interface Speed	0: link down, 10: 10 Mbps, 100: 100 Mbps
2	get	-	Interface Flags	Bit 1: Link-Status Bit 2: Duplex Mode (0: half duplex, 1 duplex) bit 3 ... 5: Automatic state identification Bit 6: Reset required Bit 7: Local hardware fault (0 = ok)
3	get	ARRAY	Physical Address	r8935 Ethernet MAC address

Attribute ID	Service	Type	Name	Value/explanation
4	get, get_and_clear	Struct of	Interface Counters	Optional, required if the "Media Counters Attribute" is implemented.
		UINT32	In Octets	Received octets
		UINT32	In Ucast Packets	Received Unicast packets
		UINT32	In NUcast Packets	Received non-Unicast packets
		UINT32	In Discards	Incoming packets, not processed
		UINT32	In Errors	Incoming packets with errors
		UINT32	In Unknown Protos	Incoming packets with unknown protocol
		UINT32	Out Octets	Sent octets
		UINT32	Out Ucast Packets	Sent Unicast packets
		UINT32	Out NUcast packets	Sent non-Unicast packets
		UINT32	Out Discards	Outgoing packets, not processed
		UINT32	Out Errors	Outgoing packets, with errors
5	get, get_and_clear	Struct of	Media Counters	Media-specific counters
		UINT32	Alignment Errors	Structure received, which does not match the number of octets
		UINT32	FCS Errors	Structure received, which does not pass the FCS check
		UINT32	Single Collisions	Structure successfully transmitted, precisely one collision
		UINT32	Multiple Collisions	Structure successfully transmitted, several collisions
		UINT32	SQE Test Errors	Number of SQE errors
		UINT32	Deferred Transmissions	First transmission attempt delayed
		UINT32	Late Collisions	Number of collisions that occurred delayed by 512 bit timers to the request
		UINT32	Excessive Collisions	Transmission unsuccessful as a result of intensive collisions
		UINT32	MAC Transmit Errors	Transmission unsuccessful as a result of an internal MAC sublayer transmission error.
		UINT32	Carrier Sense Errors	Number of errors when attempting to send a request frame, where the transmission condition was lost or was not assigned
		UINT32	Frame Too Long	Structure too large
		UINT32	MAC Receive Errors	Transmission unsuccessful as a result of an internal MAC sublayer receive error.
6	get, set	Struct of	Interface Control	-
		UINT16	Control Bits	-
		UINT16	Forced Interface Speed	-
10	get	String	Interface_Label	Interface-Label
11	get	-	Interface Capability	Bit 0: Manual setting Bit 1: Auto negotiate Bit 2: Auto MDIX Bit 3: Manual speed/duplex Bits 4 – 31: reserved Rest: Speed/Duplex options

10.7.4 Examples when using a Rockwell PLC

10.7.4.1 Configuration of a Rockwell PLC for the communication with SINAMICS DCM

Note

The user must have basic knowledge of Allen-Bradley / Rockwell PLCs.

The associated Allen-Bradley / Rockwell documentation should be used for detailed information about communication with EtherNet/IP and general programming of Rockwell PLCs.

A "Generic EtherNet/IP" module must be created in order to communicate with a SINAMICS DCM.

The following configurations must be made for the basic communication:

- Selection of the module, figures "Selection of the module (1), (2) and (3)"
  The dialog box for the selection of the module for the appropriate EtherNet interface is selected in the I/O configuration through > right-click > New Module.

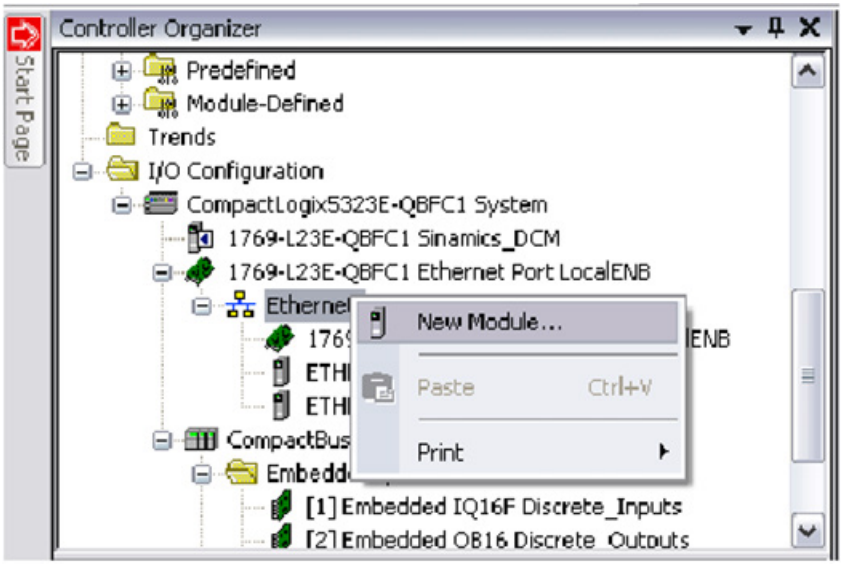

Figure 10-49 Selection of the module (1)

The "Generic EtherNet Module" is selected at Communication:

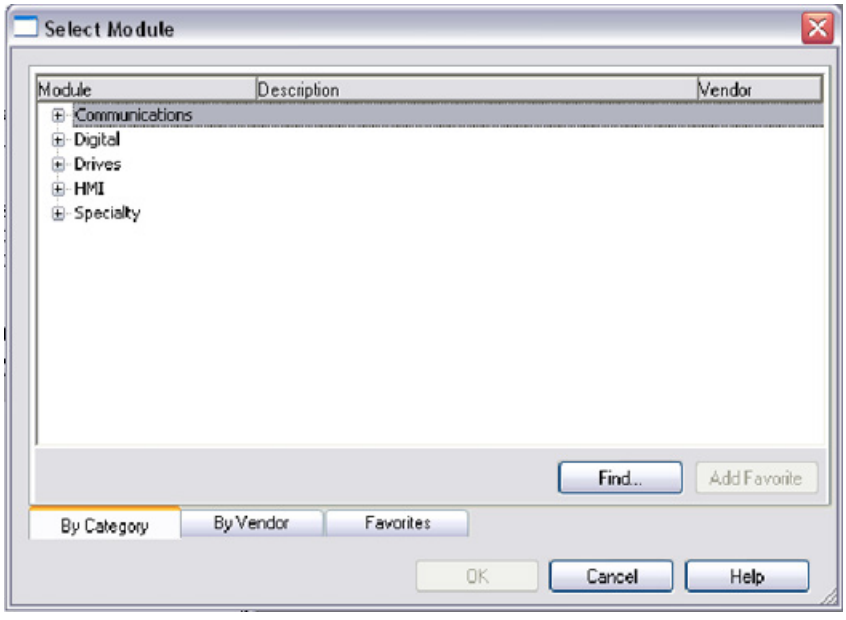

Figure 10-50 Selection of the module (2)

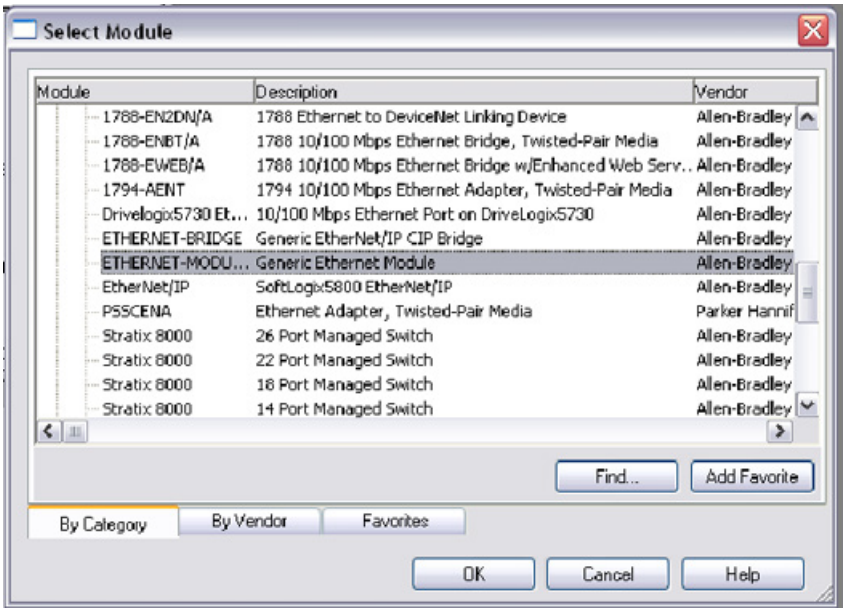

Figure 10-51 Selection of the module (3)

- After the module has been inserted by clicking OK, a new EtherNet/IP appears in the structure tree.
  A window is opened as follows by double-clicking with the left-hand mouse key or > right-hand mouse key > Properties.

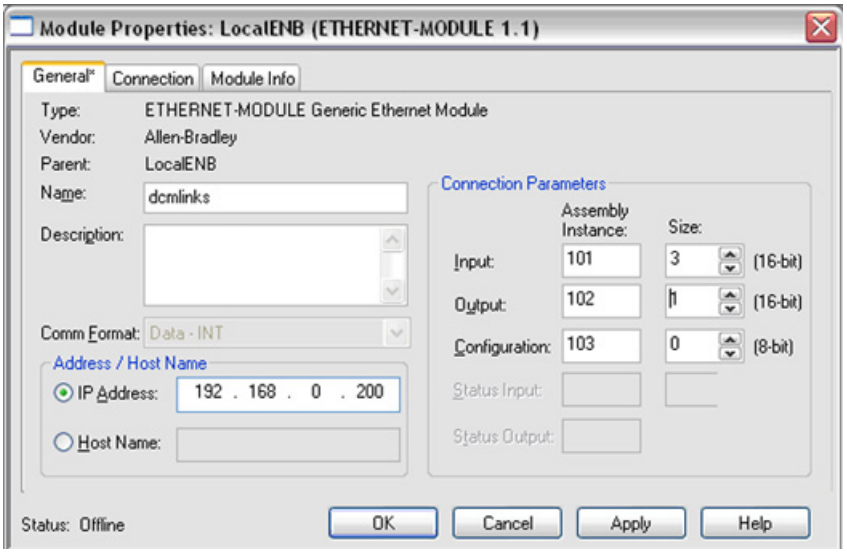

Figure 10-52 Properties

Make the following settings:

- Select a name to identify the drive
- Enter the IP address of the drive
- Set the "Connection Parameters" as described in Chapter ""Implicit messaging" – cyclic communication as I/O slave (Page 499)".

After the configuration has been activated, the drive data can be accessed via the input and output data fields (see following diagram).

For a better program documentation, it is recommended that aliases be defined for each input and output signal.

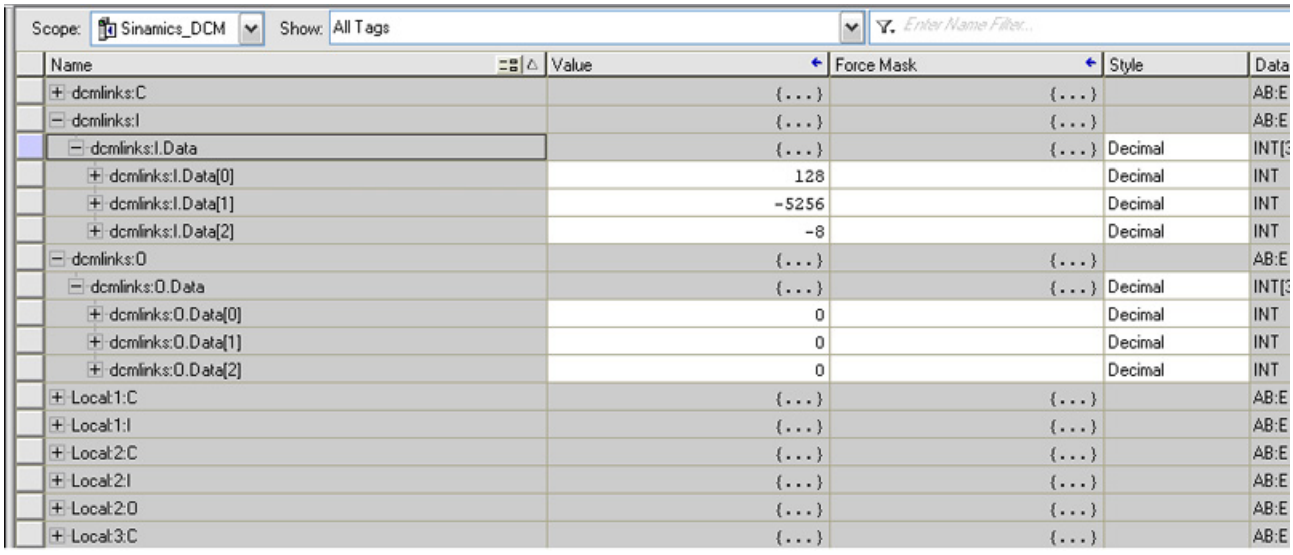

Figure 10-53 Input data and output data

Now configure the drive in order to use EtherNet/IP.

10.7.4.2 Reading and writing parameters using the Parameter Object (Class code 4xx hex)

As described in Chapter ""Explicit messaging" – acyclic or event-driven communication (Page 502)", individual drive parameters can be read and written.

In order to use this function, a "MSG" message block must be inserted in the program (figure below). A control tag of the "MESSAG" type must be declared and assigned to the message block for saving the configuration and status information.

The class information is assigned to the block in the next step. The configuration dialog must be opened by clicking (1).

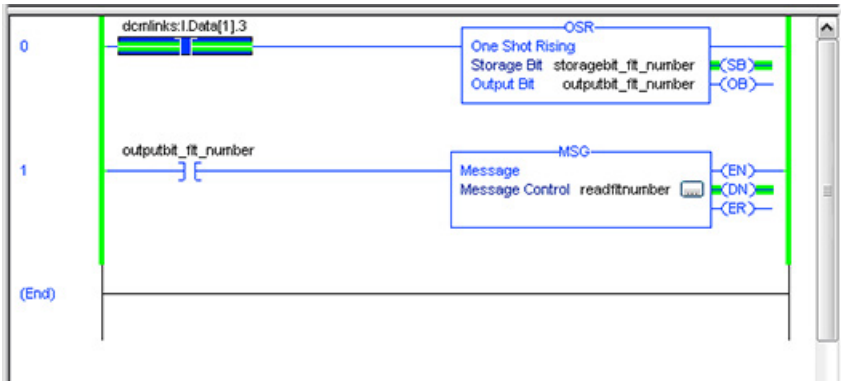

Figure 10-54 Inserting MSG

The configuration dialog shown in the following figure opens:

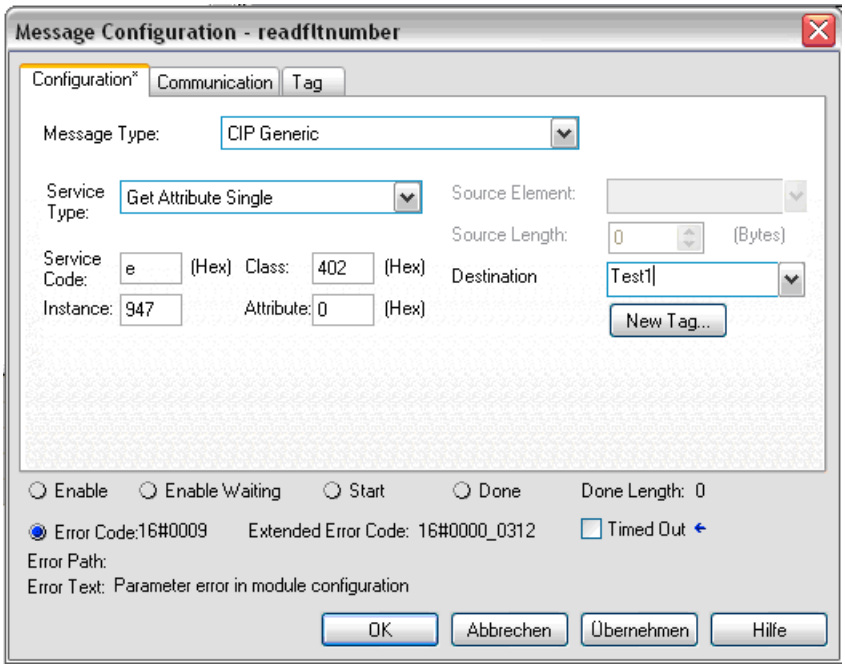

Figure 10-55 Configuration dialog

Configuration:

- Set "Message Type" to "CIP Generic"
- Set "Service Type" to
  - "Get Attribute Single" for reading
  - "Set Attribute Single" for writing
- Class: 4xx–xx represents the drive object number (default 02 hex for drive ⇒ 402)
- Instance: Parameter number
- Attribute: Index number
- Destination: Sufficiently large variable to store the queried value
- "Source Element" and "Source Length" must be defined for writing with service type "Set Attribute Single". The number of bytes must match the data type of the parameter to be written.

If the above settings have been activated, the source or destination EtherNet/IP device to which the message is to be sent must be specified.

This is done on the "Communication" tab:

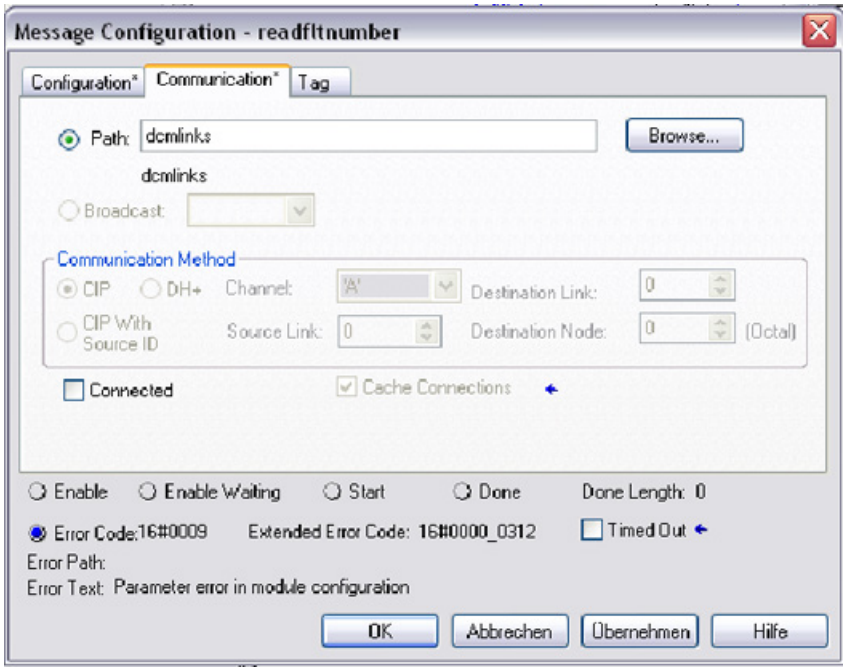

Figure 10-56 Communication

"Path": Defines the EtherNet/IP module, in this example "dcmlinks".

The previous example reads the active error number from parameter r0947 index 0 on drive object No. 2 (drive).

10.7.5 Messages and parameters

Faults and alarms (see SINAMICS DCM List Manual)

- F08501 (N,A) PN/COMM BOARD: Setpoint timeout
- F01910 (N,A) Fieldbus: Setpoint timeout
- A08526 (F) PN/COMM BOARD: No cyclic connection
- A01980 (F) PN: Cyclic connection interrupted
- A50011 (F) EtherNetIP/COMM BOARD: Configuration error

Overview of important parameters (see SINAMICS DCM List Manual)

- p0922 IF1 PROFIdrive PZD telegram selection
- p0978[0...n] List of drive objects
- p0999[0...99] List of modified parameters 10
- p2030 Fieldbus interface protocol selection
- p8835 CBE20 firmware selection
- p8940[0...239] CBE2x Name of Station

- p8941[0...3] CBE2x IP address
- p8942[0...3] CBE2x Default Gateway
- p8943[0...3] CBE2x Subnet Mask
- p8944 CBE2x DHCP mode
- p8945 CBE2x interfaces configuration
- r8950[0...239] CBE2x Name of Station actual
- r8951[0...3] CBE2x IP address actual
- r8952[0...3] CBE2x Default Gateway actual
- r8953[0...3] CBE2x Subnet Mask actual
- r8954 CBE2x DHCP Mode actual
- r8955[0...5] CBE2x MAC address
- r8956[0...1] CBE2x cyclic connection state
- r8957[0...5] CBE2x cyclic connection diagnostics

10.8 Communication via MODBUS TCP

10.8.1 Overview

The Modbus protocol is a communication protocol based on a controller/device architecture.

Modbus offers three transmission modes:

- **Modbus ASCII -** via a serial interface
  data in the ASCII code. The data throughput is lower compared to RTU.
- **Modbus RTU -** via a serial interface
  data in the binary format. The data throughput is greater than in ASCII code.
- **Modbus TCP -** via Ethernet
  data as TCP/IP packages. TCP port 502 is reserved for Modbus TCP.

Only transfer type "Modbus TCP" is available for SINAMICS DCM.

Modbus functionality

Process data and parameters are accessed via the Modbus tab.

- Process data: 40100 - 40119
  A maximum of 10 process data (PZD) can be exchanged.
- Drive data: 40300 - 40522
- All parameters via DS47: 40601 - 40722

Modbus TCP always provides a basic Ethernet functionality, which corresponds to the functionality of Ethernet interface X127:

- Commissioning access for STARTER/Startdrive with S7 protocol
- DCP (Discovery and Configuration Protocol) to set the IP address etc.
- SNMP for identification

General information about communication

Communication with Modbus TCP is established via the Ethernet/PROFINET interface on the CBE20 module.

To do this, an Advanced CUD is required.

Further, the memory card (with the device firmware) must remain permanently inserted.

For further details on the CBE20 module, see Chapter "Option Board: CBE20 Communication Board Ethernet (Page 170)".

Note

Handling the memory card

Information on how to correctly handle the memory card is provided in Chapter "Memory card functions (Page 329)".

It is especially important to note that it is not permissible to insert the card when the device is operational.

Drive object that can be addressed via Modbus

With Modbus TCP, you always address the first drive object from the list of drive objects (p0978[0]). A DC_CTRL drive object must be in this parameter.

- However, Modbus TCP is only activated if, under p0978[0], there is a drive object that is supported by Modbus TCP.
- If p0978[0] does not contain a valid drive object, then establishing communication is acknowledged with alarm A08555(2).

Diagnostics LEDs in Modbus TCP

For Modbus TCP, diagnostic states are shown using the following LEDs:

X1400 (CBE20): "**OPT**" LED

The following states can be displayed using these LEDs:

Color	Status	Meaning
Green	Continuous light	Connections and setpoints are OK.
Green	Flashing light	Connection is OK, but no setpoints (dependent on timeout).
Red	Flashing light 2 Hz	No connection or setpoint timeout.

10.8.2 Configuring Modbus TCP via interface X1400

Activating Modbus TCP via X1400 (CBE20)

1. Switch off the power supply voltage of the SINAMICS DCM.
   Wait until all LEDs on the SINAMICS DCM are dark.
2. Insert the memory card with firmware version 1.5 or higher into the appropriate slot of the CUD.
   Note that the device configuration can be overwritten if the memory card already has a parameterization file.

   Note

   Handling the memory card

   Information on how to correctly handle the memory card is provided in Chapter "Memory card functions (Page 329)".

   It is especially important to note that it is not permissible to insert the card when the device is operational.
3. Switch on the SINAMICS DCM and wait for it to run up.
4. Using STARTER or the BOP, switch to drive object CU_DC.
5. Activate the device configuration by setting p0009 = 1.
6. For drive object CU_DC, using p8835 = 5, set the firmware version "Modbus TCP".
7. Set the IP address for the CBE20 using p8941.
   The currently valid address is in r8951.
8. Set the subnet mask for the CBE20 using p8943.
   The currently valid subnet mask is in r8953.
9. Set the default gateway for the CBE20 using p8942.
   You can find the currently valid default gateway in r8952.
10. Set the DHCP mode for the CBE20 using p8944.
11. Select the setting "Activate and save configuration" as interface configuration using p8945 = 2.
12. In the STARTER commissioning tool, check the list of drive object p0978.
    If required, change the sequence of the drive objects using the telegram configuration ("Drive device" > "Communication" > "Telegram configuration").
13. Complete the device configuration with p0009 = 0.
14. Save the data using command "Copy RAM to ROM".
15. Switch off the supply voltage for the SINAMICS DCM.
    Before you switch on again, wait until all LEDs on the SINAMICS DCM are dark.
16. Switch on the supply voltage for the SINAMICS DCM.
    Your settings become active after the system has run up.

Modbus settings with interface X1400

Using the following parameters, set the communication for Modbus TCP with a X1400 interface:

Parameter	Explanation
r2050[0...19]	Connector output to interconnect the PZD received from the fieldbus controller via IF1.
p2051[0...24]	Selects the PZD (actual values) to be sent to the fieldbus controller in the word format via IF1.
r2053[0...24]	Displays the PZD (actual values) sent to the fieldbus controller in the word format via IF1.
p8840	Setting the monitoring time to monitor the received process data via the COMM BOARD. If, within this time, the Control Unit does not receive any process data from the COMM BOARD, then the drive shuts down with fault F08501.
p8839[0...1]	Assigning the CBE20 Communication Board Ethernet (X1400) for cyclic communication via PZD interface 1 (IF1) and interface 2 (IF2).
r8850[0...19]	Connector output to interconnect the PZD (setpoints) received in the word format via IF2.
p8851[0...24]	Selects the PZD (actual values) to be sent in the word format via IF2.
r8853[0...24]	Displays the PZD (actual values) sent in the word format via IF2.

10.8.3 Mapping tables

Modbus register and Control Unit parameters

The Modbus protocol contains register or bit numbers for addressing memory. You must assign the appropriate control words, status words, and parameters to these registers in the device.

The valid holding register address range extends from 40001 up to 40722. When trying to access other holding registers, the "Exception code" error is output

The process data are transferred into the register range from 40100 up to 40119.

Note

"R"; "W"; "R/W" in the "Access" column stands for read (with FC03); write (with FC06); read/write.

Table 10-67 Assigning the Modbus register to the parameters - process data

Register	Description	Access	Unit	Scaling	ON/OFF text or Value range	Data / parameter
Control data						
40100	Control word (see SINAMICS DCM List Manual, function block diagram 2442)	R/W	-	1	-	Process data 1 (r2050[0])
40101	Main setpoint	R/W	-	1	-	Process data 2 (r2050[1])

Register	Description	Access	Unit	Scaling	ON/OFF text or Value range	Data / parameter
40102	STW 3	R/W	-	1	-	Process data 3 (r2050[2])
40103	STW 4	R/W	-	1	-	Process data 4 (r2050[3])
40104	PZD 5	R/W	-	1	-	Process data 5 (r2050[4])
40105	PZD 6	R/W	-	1	-	Process data 6 (r2050[5])
40106	PZD 7	R/W	-	1	-	Process data 7 (r2050[6])
40107	PZD 8	R/W	-	1	-	Process data 8 (r2050[7])
40108	PZD 9	R/W	-	1	-	Process data 9 (r2050[8])
40109	PZD 10	R/W	-	1	-	Process data 10 (r2050[9])
Status data						
40110	Control word (see SINAMICS DCM List Manual, function block diagram 2452)	R	-	1	-	Process data 1 (p2051[0])
40111	Main actual value	R	-	1	-	Process data 2 (p2051[1])
40112	ZSW 3	R	-	1	-	Process data 3 (p2051[2])
40113	ZSW 4	R	-	1	-	Process data 4 (p2051[3])
40114	PZD 5	R	-	1	-	Process data 5 (p2051[4])
40115	PZD 6	R	-	1	-	Process data 6 (p2051[5])
40116	PZD 7	R	-	1	-	Process data 7 (p2051[6])
40117	PZD 8	R	-	1	-	Process data 8 (p2051[7])
40118	PZD 9	R	-	1	-	Process data 9 (p2051[8])
40119	PZD 10	R	-	1	-	Process data 10 (p2051[9])

Table 10-68 Assigning the Modbus register to the parameters - parameter data

Register	Description	Access	Unit	Scaling	ON/OFF text or Value range	Data / parameter
Drive identification						
40300	Actual power unit code number	R	-	1	0 ... 65535	r0200
40301	Control Unit firmware	R	-	1	0 ... 65535	r50060
Drive data						

Register	Description	Access	Unit	Scaling	ON/OFF text or Value range	Data / parameter
40322	Ramp-up time	R/W	s	100	10.00 ... 655.35	p50303
40323	Ramp-down time	R/W	s	100	10.00 ... 655.35	p50304
40324	Reference speed	R/W	RPM	1	6 ... 65535	p2000
Drive diagnostics						
40340	Speed setpoint	R	RPM	1	-32768 ... 32767	r0020
40341	Actual speed value	R	RPM	1	-32768 ... 32767	r0021
40345	Actual current value	R	A	100	0 ... 655.35	r0027
40347	Actual active power	R	kW	100	0 ... 655.35	r0032
40349	Control priority	R	-	1	HAND AUTO	r0807
Fault diagnostics						
40400	Failure number, index 0	R	-	1	0 ... 65535	r0947 [0]
40401	Failure number, index 1	R	-	1	0 ... 65535	r0947 [1]
40402	Failure number, index 2	R	-	1	0 ... 65535	r0947 [2]
40403	Fault number, index 3	R	-	1	0 ... 65535	r0947 [3]
40404	Fault number, index 4	R	-	1	0 ... 65535	r0947 [4]
40405	Fault number, index 5	R	-	1	0 ... 65535	r0947 [5]
40406	Fault number, index 6	R	-	1	0 ... 65535	r0947 [6]
40407	Fault number, index 7	R	-	1	0 ... 65535	r0947 [7]
40408	Alarm number	R	-	1	0 ... 65535	r2110 [0]
40409	Actual alarm code	R	-	1	0 ... 65535	r2132
40499	PRM ERROR code	R	-	1	0 ... 255	-
Technology controller[1)]						
40500	Technology controller enable	R/W	-	1	0 ... 1	p2200, r2349.0
Adapt technology controller[1)]						
40510	Time constant for actual-value filters of the technology controller	R/W	-	100	0.00 ... 60.0	p2265
40511	Scaling factor for actual value of the technology controller	R/W	%	100	0.00 ... 500.00	p2269
40512	Proportional amplification of the technology controller	R/W	-	1000	0.000 ... 65.535	p2280
40513	Integral time of the technology controller	R/W	s	1	0 ... 60	p2285
40514	Time constant D-component of the technology controller	R/W	-	1	0 ... 60	p2274
40515	Max. limit of technology controller	R/W	%	100	-200.0 ... 200.0	p2291
40516	Min. limit technology controller	R/W	%	100	-200.0 ... 200.0	p2292
PID diagnostics						
40521	Actual value of technology controller after filter	R	%	100	-100.0 ... 100.0	r2266
40522	Output signal technology controller	R	%	100	-100.0 ... 100.0	r2294

1) The technology controller parameters can only be accessed if, in the STARTER project, also the "Technology controller" function module is activated.

Table 10-69 Assignment of the Modbus register for general parameter access using DS47

Register	Description	Access	Unit	Scaling	ON/OFF text or Value range	Data / parameter
40601	DS47 Control	R/W	-	-	-	-
40602	DS47 header	R/W	-	-	-	-
40603	DS47 data 1	R/W	-	-	-	-
...	...					
40722	DS47 data 120	R/W	-	-	-	-

Note

Limited value range

Modbus TCP registers have a maximum 16 bit width. The values of display parameters (r parameters) cannot always be represented with 16 bits. In these particular cases, the maximum value that can be represented is displayed.

- Unsigned: 65535
- Signed min: -32768
- Signed max: 32767

10.8.4 Read and write access using function codes

Function codes used

For data exchange between the controller and device, predefined function codes are used for communication via Modbus.

The Control Unit uses the following Modbus function codes:

- FC 03: Holding register to read data from the converter
- FC 06: Write single register to write to individual register
- FC 16: Write to multiple registers to write to several registers

Structure of a Modbus TCP message

Application Data Unit (ADU)					
Modbus Application Header				Protocol Data Unit (PDU)	
Transaction ID	Protocol ID	Length	Unit ID	FCode	Data
2 Bytes	2 Bytes	2 Bytes	1 Byte	1 Byte	0 ... 252 Bytes

Figure 10-57 Individual components, including the Modbus Application Header (MBAP) and function code

Structure of a read request via Modbus function code 03 (FC 03)

Any valid register address is permitted as the start address.

Via FC 03, the control can address more than one register with one request. The number of addressed registers is contained in bytes 10 and 11 of the read request.

Table 10-70 Structure of a read request for device number 17, example

Value	Byte	Description
MBAP header		
03 h	7	
00 h	8	Register start address "High" (register 40110)
6D h	9	Register start address "Low"
00 h	10	Number of registers "High" (2 registers: 40110; 40111)
02 h	11	number of registers "Low"

The response returns the corresponding data set:

Table 10-71 Device response to the read request, example

Value	Byte	Description
MBAP header		
03 h	7	Function code
04 h	8	Number of bytes (4 bytes are returned)
11 h	9	Data, first tab "High"
22 h	10	Data, first tab "Low"
33 h	11	Data, second tab "High"
44 h	12	Data, second tab "Low"

Table 10-72 Invalid read request

Read request	Converter response
Invalid register address	Exception code 02 (invalid data address)
Read a write-only register	Telegram in which all values are set to 0.
Read a reserved register	
Controller addresses more than 125 registers	Exception code 03 (invalid data value)
The start address and the number of registers of an address are located outside of a defined register block	Exception code 02 (invalid data address)

Structure of a write request via Modbus function code 06 (FC 06)

Start address is the holding register address.

Via FC 06, with one request, only precisely one register can be addressed. The value, which is written to the addressed register, is contained in bytes 10 and 11 of the write request.

Table 10-73 Structure of a write request for device number 17, example

Value	Byte	Description
MBAP header		
06 h	7	Function code
00 h	8	Register start address "High" (write register 40100)
63 h	9	Register start address "Low"
55 h	10	Register data "High"
66 h	11	Register data "Low"

The response returns register address (bytes 8 and 9) and the value (bytes 10 and 11), which the higher-level control had written to the register.

Table 10-74 Device response to the write request, example

Value	Byte	Description
MBAP header		
06 h	7	Function code
00 h	8	Register start address "High"
63 h	9	Register start address "Low"
55 h	10	Register data "High"
66 h	11	Register data "Low"

Table 10-75 Invalid write request

Write request	Converter response
Incorrect address (a holding register address does not exist)	Exception Code 02 - invalid data address
Write to a "read-only" register	Exception Code 04 - device failure
Write to a reserved register	

For Exception Code 4, via the holding register 40499, you can read out the internal drive error code, which has occurred for the last parameter access via the holding register.

10.8.5 Communication via data set 47

Via FC 16, with one request, up to 122 registers can be written to directly one after the other, while for Write Single Register (FC 06) you must individually write the header data for each register.

Header

In addition to the transfer type, the start address and the number of the following registers in the header.

User data

You control the access in the user data via register 40601.

In register 40602, you define the access as well as the length of the request data.

Register 40603 contains the request reference - it is defined by the user - and the access type - reading or writing.

From register 40603 and higher, the request aligns communication via data set 47 according to PROFIdrive.

Register 40604 contains the number of the drive object and the number of parameters that are read out or written to.

Register 40605 contains the attribute that you use to control whether you read out the parameter value or the parameter attribute. In the number of elements you specify how many indices are read.

10.8.5.1 Communication details

General parameter access is realized using the Modbus register 40601 ... 40722.

Communication via DS47 is controlled using 40601. 40602 contains the function code (always = 47 = 2F hex) and the number of the following user data. User data are contained in registers 40603 ... 40722.

Communication overview

Value in the register				Explanation
40601	40602		40603 ... 40722	
0	47	...	...	Write values for acyclic access
1	47	Request length [bytes]	Request data	Activate acyclic access
2	47	Response length [bytes]	Response data	Response for a successful request
2	47	0	Fault code	Response for an erronous request

Error codes

1 hex: Invalid Length (invalid length)
2 hex: Invalid State (in the actual converter state, this action is not permitted)
3 hex: Invalid function code (FC ≠ 2F hex)
4 hex: Response not ready (the response has still not been issued)
5 hex: Internal Error (general system error)

Incorrect access operations to parameters via data set 47 are logged in registers 40603 ... 40722. The error codes are described in the PROFIdrive profile.

10.8.5.2 Examples: Read parameter

Table 10-76 Write parameter request: Reading parameter value of r0002 from device number 17

Value	Byte	Description
MBAP header		
10 h	7	Function code (write multiple)
0258 h	8,9	Register start address
0007 h	10,11	Number of registers to be read (40601 … 40607)
0E h	12	Number of data bytes (7 registers, each 2 bytes = 14 bytes)
0001 h	13,14	40601: DS47 Control = 1 (activate request)
2F0A h	15,16	40602: Function 2F h (47), request length 10 bytes (0A h)
8001 h	17,18	40603: Request reference = 80 h, request identifier = 1 h
0101 h	19,20	40604: DO Id = 1, number of parameters = 1
1001 h	21,22	40605: Attribute, number of elements = 1
0002 h	23,24	40606: Parameter number = 2
0000 h	25,26	40607: Subindex = 0

Table 10-77 Start parameter request: Reading parameter value of r0002 from device number 17

Value	Byte	Description
MBAP header		
03 h	7	Function code (read)
0258 h	8,9	Register start address
0007 h	10,11	Number of registers to be read (40601 … 40607)
0010 h	12,13	Number of registers

Table 10-78 Response for successful read operation

Value	Byte	Description
MBAP header		
03 h	7	Function code (read)
20 h	8	Number of following data bytes (20 h: 32 bytes ≙ 16 registers)
0002 h	9,10	40601: DS47 Control = 2 (the request was executed)
2F08 h	11,12	40602: Function code 2F h (47), response lengths 8 bytes
8001 h	13,14	40603: Request reference mirrored = 80 h, response identifier = 1 (request parameter)
0101 h	15,16	40604: DO-ID = 1, number of parameters = 1
0301 h	17,18	40605: Format, number of elements = 1
001F h	19,20	40606: Parameter value = 1F h (31)

Table 10-79 Response for unsuccessful read operation - read request still not completed

Value	Byte	Description
MBAP header		
03 h	7	Function code (read)
20 h	8	Number of following data bytes (20 h: 32 bytes ≙ 16 registers)
0001 h	9,10	40601: Check value 1 = request is processed
2F00 h	11,12	40602: Function code 2F h (47), response length 0 (error)
0004 h	13,14	40603: Error code: 0004 Response Not Ready (response has still not been issued)

10.8.5.3 Examples: Write parameter

Table 10-80 Write parameter request: Writing the parameter value of p1121 from device number 17

Value	Byte	Description
MBAP header		
10 h	7	Function code (write multiple)
0258 h	8,9	Register start address
000A h	10,11	Number of registers to be written to (40601 … 40610)
14 h	12	Number of data bytes (10 registers, each 2 bytes = 20 bytes)
0001 h	13,14	40601: C1 (activate request)
2F10 h	15,16	40602: Function 2F h (47), request length 16 bytes (10 h)
8002 h	17,18	40603: Request reference = 80 h, request identifier = 2 h (write)
0101 h	19,20	40604: DO Id = 1, number of parameters = 1
1001 h	21,22	40605: Attribute, number of elements = 1
0461 h	23,24	40606: Parameter number = 1121
0000 h	25,26	40607: Subindex = 0
0801 h	27,28	40608: Format + number of values
4142 h	29,30	40609: Parameter value 12,15
6666 h	31,32	40610: Parameter value

Table 10-81 Start parameter request: Writing the parameter value of p1121 from device number 17

Value	Byte	Description
MBAP header		
03 h	7	Function code (read)
0258 h	8,9	Register start address
0007 h	10,11	Number of registers to be written to (40601 … 40610)
0010 h	12,13	Number of registers

Table 10-82 Response for successful write operation

Value	Byte	Description
MBAP header		
03 h 20 h	7 8	Function code (read) Number of following data bytes (20 h: 32 bytes ≙ 16 registers)
0002 h 2F04 h 8002 h 0101 h	9,10 11,12 13,14 15,16	40601: DS47 Control = 2 (request was executed) 40602: Function code 2F h (47), response length 4 bytes 40603: Request reference mirrored = 80 h, response identifier = 2 (change parameter) 40604: DO-ID = 1, number of parameters = 1

Table 10-83 Response for unsuccessful write operation - write request still not completed

Value	Byte	Description
MBAP header		
03 h 20 h	7 8	Function code (read) Number of following data bytes (20 h: 32 bytes ≙ 16 registers)
0001 h 2F00 h 0004 h	9,10 11,12 13,14	40601: DS47 Control = 1 (request is processed) 40602: Function code 2F h (47), response length 0 (error) 40603: Error code: 0004 Response Not Ready (response has still not been issued)

10.8.6 Communication sequence

Logical error

If the device detects a logical error within a request, it responds to the controller with an "exception response". In the response, the device sets the highest bit in the function code to 1. If the device receives, for example, an unsupported function code from the controller, the device responds with an "exception response" with code 01 (illegal function code).

Table 10-84 Overview of exception codes

Exception code	Modbus name	Note
01	Illegal function code	An unknown (unsupported) function code was sent to the device.
02	Illegal Data Address	An invalid address was requested.
03	Illegal data value	An invalid data value was detected.
04	Server failure	The device has terminated during processing.

Process data monitoring time (setpoint timeout)

The "Setpoint timeout" only applies for access to process data (40100 ... 40109, 40110 ... 40119). The "Setpoint timeout" is not generated for parameter data (40300 ... 40522).

Fieldbus interface:

In parameter p2040 you define the time for cyclic data exchange for process data.

Setting range 0 - 2000 s.

The time depends on the amount of data to be transferred and the control.

"Setpoint timeout" (F01910) is issued by the Modbus if p2040 is set to a value > 0 ms and no process data is requested within this time period.

COMM BOARD:

In parameter p8840 you define the time for cyclic process data exchange.

Setting range 0 - 2000 s.

The time depends on the amount of data to be transferred and the control.

"Setpoint timeout" (F08501) is issued by the Modbus if p8840 is set to a value > 0 ms and no process data is requested within this time period.

10.8.7 Messages and parameters

Faults and alarms (see DCM List Manual)

- F01910 Fieldbus: Setpoint timeout
- A01925 Modbus TCP connection interrupted
- F08501 PN/COMM BOARD: Setpoint timeout
- A08526 PN/COMM BOARD: No cyclic connection
- A08555 Modbus TCP commissioning fault

Overview of important parameters (see SINAMICS DCM List Manual)

- p0978[0...n] List of drive objects
- p2030 Fieldbus interface protocol selection
- p2040 Fieldbus interface monitoring time:
- r2050[0...19] CO: IF1 PROFIdrive PZD receive word
- p2051[0...24] CI: IF1 PROFIdrive PZD send word
- r2053[0...24] IF1 PROFIdrive diagnostics PZD send word
- r2054 PROFIBUS status
- p8835 CBE20 firmware selection
- p8839[0...1] PZD interface hardware assignment
- p8840 COMM BOARD monitoring time
- r8850[0...19] CO: IF2 PZD receive word
- p8851[0...24] CI: IF2 PZD send word
- r8853[0...24] IF2 diagnostics PZD send
- r8854 COMM BOARD state

- p8920[0...239] PN Name of Station
- p8921[0...3] PN IP address
- p8922[0...3] PN default gateway
- p8923[0...3] PN Subnet Mask
- p8924 PN DHCP mode
- p8925 PN interfaces configuration
- p8940[0...239] CBE2x Name of Station
- p8941[0...3] CBE2x IP address
- p8942[0...3] CBE2x Default Gateway
- p8943[0...3] CBE2x Subnet Mask
- p8944 CBE2x DHCP mode
- p8945 CBE2x interfaces configuration

10.9 Serial interface with USS protocol

Specification

Developed by Siemens, the USS® protocol is a proprietary fieldbus which was already being used in a variety of applications before PROFIBUS was established.

The USS® protocol is described in the following document:
USS® Protocol Specification: Order number E20125-D0001-S302-A1

Properties

The USS® protocol can only be used as a fieldbus **instead** of PROFIBUS; USS and PROFIBUS cannot run at the same time.

The USS® protocol enables one or more SINAMICS DCMs to be connected to a master station. It is a point-to-point coupling or a bus-type coupling. A maximum of 31 nodes can be connected in the bus configuration (1 master and a maximum of 30 devices). The bus terminator must be activated on both bus nodes at each end of the bus line.

The USS® protocol enables access to all relevant process data, diagnostic information, and parameters for the SINAMICS DCM.

The USS® protocol is purely a master-device protocol in which a SINAMICS DCM can only ever be a device. In this case, a SINAMICS DCM only sends a telegram to the master if it has received a telegram from it. Therefore, SINAMICS DCMs cannot use the USS® protocol to exchange data with one another directly.

Connecting

Terminal X178, X179

Function diagrams

The function diagrams for the fieldbus interface are relevant:
See FP2410, FP2420, FP2440, FP2442, FP2450, FP2452, FP2460, FP2470, FP2472, FP2481, and FP2483.

Wiring example for a USS bus

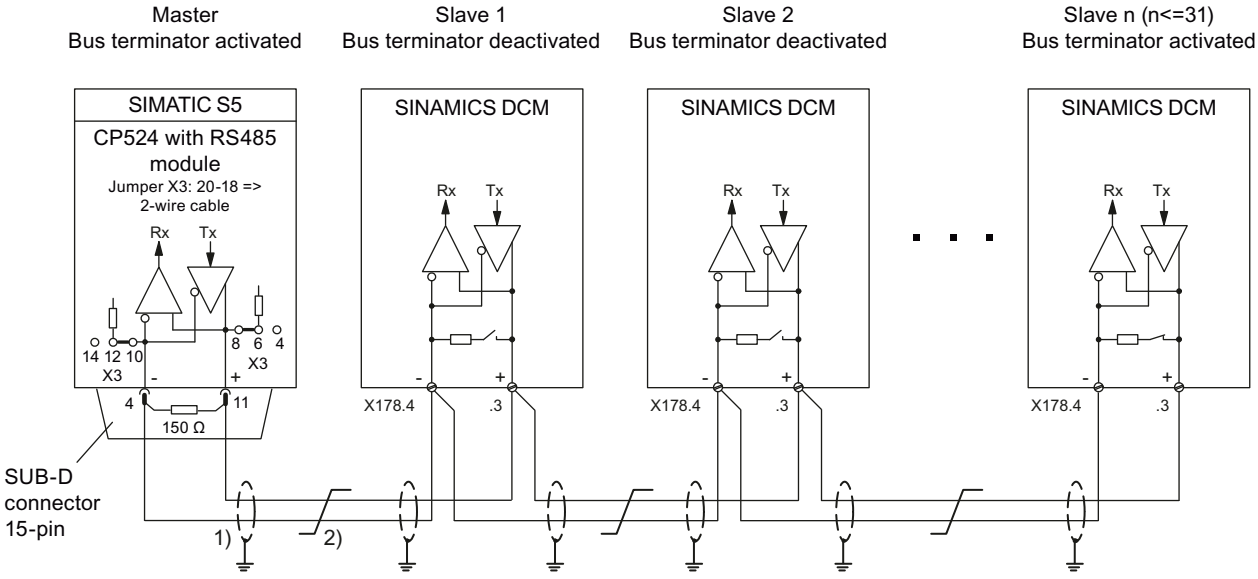

1) The shields for the interface cables must be connected directly on the devices (using a clamp, for example) to device or cabinet ground, with a low level of impedance.

2) Twisted cable, e.g. LIYCY 2×0.5 mm^2; with longer cables, an equipotential bonding cable should be used to ensure that the difference in ground potentials between the link partners remains below 7 V.

Figure 10-58 USS bus

10.10 Switch on, switch off, enable

10.10.1 Switch on/Switch off (ON/OFF1) - control word bit 0

The "Switch on/Shutdown" (ON/OFF1) function is controlled using the "ON/OFF1 switch-on command" (= ANDing the signal from terminal X177.12 with the signal selected using p0840).

The following operating modes are possible here:

p50445 = 0: The "ON/OFF1 switch-on command" takes the form of ANDing the signal from terminal X177.12 with the signal selected using p0840 (level-controlled, 0 = shutdown, 1 = switch on).

p50445 = 1: Edge triggering of "ON/OFF1 switch-on command":
The switch-on command is saved when a 0 → 1 transition takes place (see function diagram 3130 in the SINAMICS DCM List Manual). The binector selected using p50444 must be in the log. "1" state at this point. The memory is reset when this binector enters the log. "0" state.

Sequence of events for switching on the drive:

1. Apply the "Switch on" command (e.g. using the "Switch on/Shutdown" terminal).
2. The system exits operating state o7.
3. The "Line contactor closed" relay (terminal XR1-109 and -110) picks up.
4. The field-current reduction function stops
5. if "Operation enable" is applied:
   - With positive brake-release time (p50087):
     The "Release holding or operational brake" signal (r53210.0 = 0) is output and p50087 is awaited in operating state o1.0.
   - With negative brake-opening time (p50087 negative):
     Go immediately to step 6; brake is still closed (r53210.0 = 1)
6. The ramp-function generator, n controller, and I controller are enabled.
7. Once a negative brake-release time (p50087) has elapsed, the "Release holding or operational brake" (r53210.0 = 0) signal is output.

Procedure for shutting down the drive:

1. Apply the "Shutdown" command (e.g. using the "Switch on/Shutdown" terminal).
2. Deceleration along the ramp-function generator ramp
3. Wait until n < nmin (p50370, p50371).
4. The "Close holding or operational brake" (r53210.0 = 1) signal is output.
5. The brake-closing time (p50088) is awaited.
6. The ramp-function generator and n controller are disabled.
7. Reduction in armature current
8. The armature firing pulses are disabled.

9. The "Line contactor closed" relay (terminal XR1-109 and XR1-110) drops out.
10. Operating state o7.0 or higher is reached.
11. The wait time for field-current reduction (p50258) elapses.
12. The field is reduced to a parameterizable value (p50257).

"Switch on/Shutdown" overview

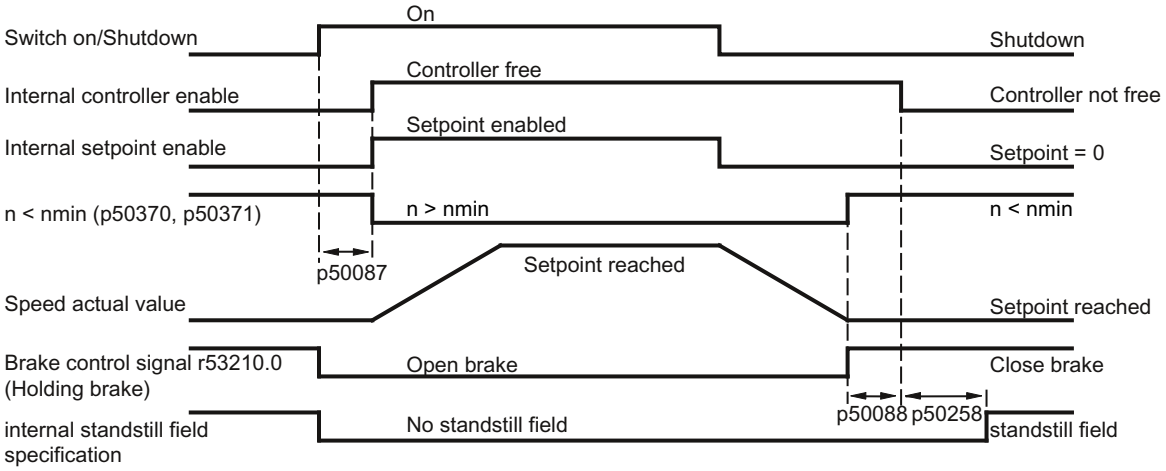

p50087 Brake-release time (positive in this case)

p50088 Brake-closing time

p50258 Wait time for automatic field-current reduction

Figure 10-59 Switch on/Shutdown

- An internal interlock becomes active once n < nmin (r50370, r50371) for the first time. This stops the drive from attempting to decelerate again if the motor is rotated by external influences; the n < nmin message then disappears.
- Whether level triggering or edge triggering is selected has an overarching effect on "Switch on", "Switch off", and "Creep".

  Note

  The "Creep' function is described in the "Creep (Page 545)" chapter.

- Selecting edge triggering causes "Switch on" and "Creep" to replace one another, i.e.:
  - A "Switch on" edge at terminal X177.12 cancels a "Creep" function that had previously been triggered.
  - A "Creep" edge at a binector selected using p50440 cancels a "Switch on" function that had previously been triggered.

- With edge triggering, an automatic restart following a brief interruption in the electronic power supply voltage is not possible.
- To ensure that "Shutdown" functions even when rewiring is carried out, current or torque lower limits are specified, or additional setpoints are supplied, certain functions are disabled automatically when "Shutdown" is applied.
  - All torque limits are disabled while braking to n < nmin.
  - Of the current limits, only the system current limit (p50171 and p50172), speed-dependent current limit, and current limit resulting from I^2t monitoring of the power unit are enabled.

10.10.2 OFF2 (disconnection) - control word bit 1

The OFF2 signal is LOW active (log. "0" state = disconnection).

Procedure for applying disconnection:

1. The ramp-function generator, n controller, and Ia controller are disabled.
2. Reduction in armature current
3. The firing pulses are disabled.
4. "Close operational brake" is output (r53210.0 = 1, where p50080 = 2).
5. Operating state o10.0 or higher is reached.
6. The field current is maintained at a fixed point (i.e. there is **no** increase in the field current, even on exiting the field-weakening range).
7. The "Line contactor closed" relay (terminal XR1-109 and XR1-110) drops out.
8. The drive coasts down (or is decelerated by the operational brake).
9. The parameterizable wait time (p50258) elapses.
10. The field is reduced to a parameterizable value (p50257).
11. Once n < nmin (p50370, p50371), the "Close holding brake" signal is output (r53210.0 = 1, where p50080 = 1).

10.10.3 OFF3 (quick stop) - control word bit 2

The OFF3 signal is LOW active (log. "0" state = quick stop).

Procedure for applying "Quick stop":

1. The ramp-function generator is disabled.
2. A speed setpoint of zero is applied.
3. Deceleration along the down ramp acc. to p50296, p50297, p50298
4. Wait until n < nmin (p50370, p50371).
5. "Close operational or holding brake" (r53210.0 = 1) is output.

6. Wait for brake-closing time (p50088)
7. The ramp-function generator and speed controller are disabled.
8. Reduction in armature current
9. The armature firing pulses are disabled.
10. The "Line contactor closed" relay (terminal XR1-109 and XR1-110) drops out.
11. Operating state o9.0 or higher is reached.
12. The wait time for field-current reduction (p50258) elapses.
13. The field is reduced to a parameterizable value (p50257).

Procedure for withdrawing "Quick stop":

1. Remove "Quick stop" command.
2. Apply the "Shutdown" command (e.g. using the "Switch on/Shutdown" terminal).
3. The system exits operating state o8.

Quick stop overview

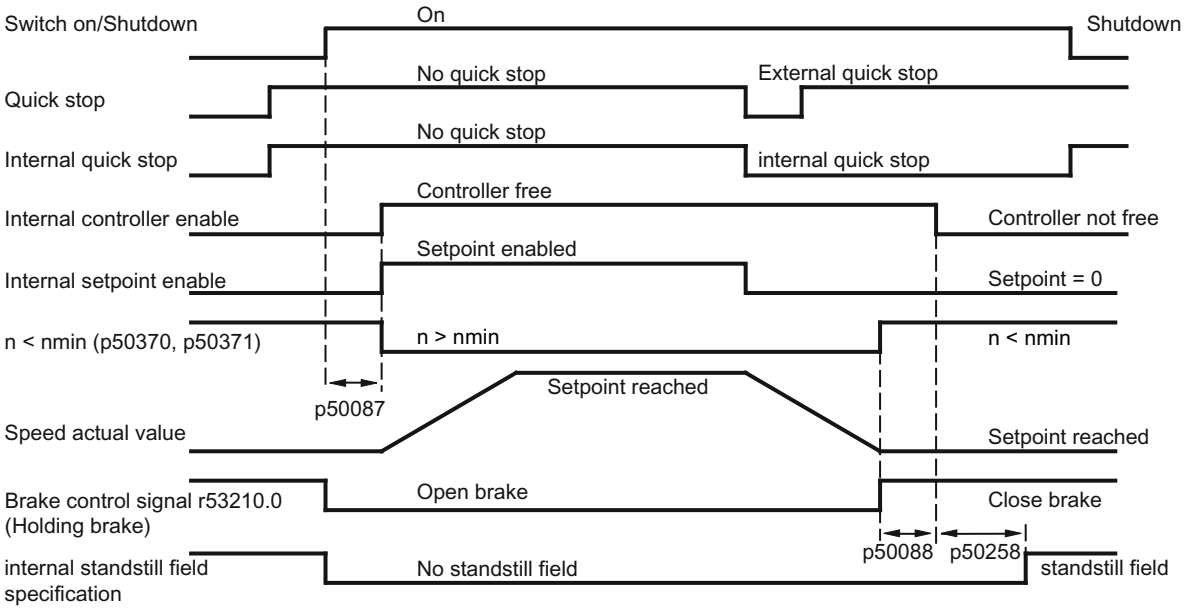

p50087 Brake-release time (positive in this case)

p50088 Brake-closing time

p50258 Wait time for automatic field-current reduction

Figure 10-60 OFF3 (quick stop)

- The "Quick stop" command only needs to be present as a short pulse (> 10 ms). It is then saved internally. It is only possible to reset the memory by applying the "Shutdown" command.
- The SINAMICS DCM logically combines all "Quick stop" commands in such a way that the "Quick stop" function is only disabled once all commands are in the "No quick stop" state.

- An internal interlock becomes active once n < nmin (r50370, r50371) for the first time. This stops the drive from attempting to decelerate again if the motor is rotated by external influences; the n < nmin message then disappears.
- To ensure that "fast stopping" functions even when rewiring is carried out, current or torque lower limits are specified, or additional setpoints are entered, certain functions are disabled automatically when "fast stopping" is applied.
  - All torque limits are disabled while braking to n < nmin.
  - Of the current limits, only the system current limit (p50171 and p50172), speed-dependent current limit, and current limit resulting from I2t monitoring of the power unit are enabled.

10.10.4 Operation enable (enable) - control word bit 3

The enable signal is HIGH active (log. "1" state = enable).

Control word bit 3 and terminal X177.13 (enable) are logically ANDed. See also function diagram 2580.

Procedure for applying operation enable (if a switch-on command is present):

1. With positive brake-release time (p50087):
   The "Release holding or operational brake" signal (r53210.0 = 0) is output and p50087 is awaited in operating state o1.0.
   With negative brake-opening time (p50087 negative):
   Go immediately to step 2; brake is still closed (r53210.0 = 1)
2. The ramp-function generator, n controller, and I controller are enabled.
3. Operating state o0 is reached.
4. Once a negative brake-release time (p50087) has elapsed, the "Release holding or operational brake" (r53210.0 = 0) signal is output.

Procedure for withdrawing operation enable:

1. The ramp-function generator, n controller, and I controller are disabled.
2. Reduction in armature current
3. The armature firing pulses are disabled.
4. The "Close operational brake" signal is output (r53210.0 = 1, where p50080 = 2).
5. Operating state o1.0 or higher is reached.
6. The drive coasts down (or is decelerated by the operational brake).
7. Once n < nmin (p50370, p50371), the "Close holding brake" signal is output (r53210.0 = 1, where p50080 = 1).

10.11 Safety shutdown (E-STOP)

⚠ WARNING

No Emergency Stop, Emergency Off or STO function

The E-STOP function does not comply with the requirements relating to an Emergency Stop, Emergency Off or STO function (functional safety)!

- Only use the E-STOP function corresponding to the subsequent description.

The E-STOP function forces the "line contactor closed" relay to drop out, activating the relay contact (terminals XR1-109 and -110) for the main contactor control within approximately 15 ms, independent of the semiconductor components and Control Unit (CUD) functions. If the CUD is operating correctly, entering I = 0 via the closed-loop control means that the main contactor is switched in a no-current condition. The drive coasts down once E-STOP has been entered.

The E-STOP function is triggered when the switch between terminals XS1-105 and -106 is opened.

The E-STOP function causes the drive to enter the "Switching on inhibited" operating state. This must be acknowledged by activating the "Shutdown" function, e.g. by opening terminal X177.12.

Procedure for applying E-STOP:

1. The ramp-function generator, n controller, and I controller are disabled.
2. Reduction in armature current
3. a) p51616 = 0: E-STOP acts like OFF2 (firing pulses are disabled as soon as I = 0).
   b) p51616 = 1: E-STOP immediately stops firing pulses from being output (without waiting for I = 0).
4. The "Close operational brake" signal is output (r53210.0 = 1, where p50080 = 2).
5. Operating state o10.0 or higher is reached.
6. The field current is maintained at a fixed point (i.e. there is **no** increase in the field current, even on exiting the field-weakening range).
7. The "Line contactor closed" relay (terminal XR1-109 and -110) drops out.
8. The drive coasts down (or is decelerated by the operational brake).
9. The wait time (to be set at p50258) elapses.
10. The field is reduced to a parameterizable value (p50257).
11. Once n < nmin (p50370, p50371), the "Close holding brake" signal is output (r53210.0 = 1, for p50080 = 1).

Remark
15 ms after E-STOP has been applied (even if point 7 in this procedure has not yet been reached), the "Line contactor closed" relay (terminal XR1-109 and XR1-110) will always drop out; this is triggered by the hardware.

10.12 Setpoint channel

10.12.1 Ramp-function generator

Table 10-85 Definitions

Ramp-up	Acceleration from lower positive to higher positive speeds (e.g. 10 % to 90 %) or from lower negative to higher negative speeds (e.g. -10 % to -90 %)
Return flow	Deceleration from higher positive to lower positive speeds (e.g. 90 % to 10 %) or from higher negative to lower negative speeds (e.g. -90 % to -10 %)
Transition from negative to positive speeds	E.g. from -10% to +50%: From -10% to 0 = ramp-down and From 0 to +50% = ramp-up, and vice versa
Ramp-up time	The amount of time the ramp-function generator requires, when initial rounding and final rounding = 0 and an input variable jump from 0 to 100 % or 0 to -100 % is performed, for passing through the 100 % range at the ramp-function generator output. For smaller jumps at the input, the rise at the output is performed at the same rate.
Ramp-down time	That time, that the ramp-junction generator requires for start- and final rounding = 0 for an input variable jump from 100 % to 0 or from -100 % to 0 to run through 100 % at the ramp-function generator output. For smaller jumps at the input, the rise at the output is performed at the same rate.

Ramp-function generator mode of operation

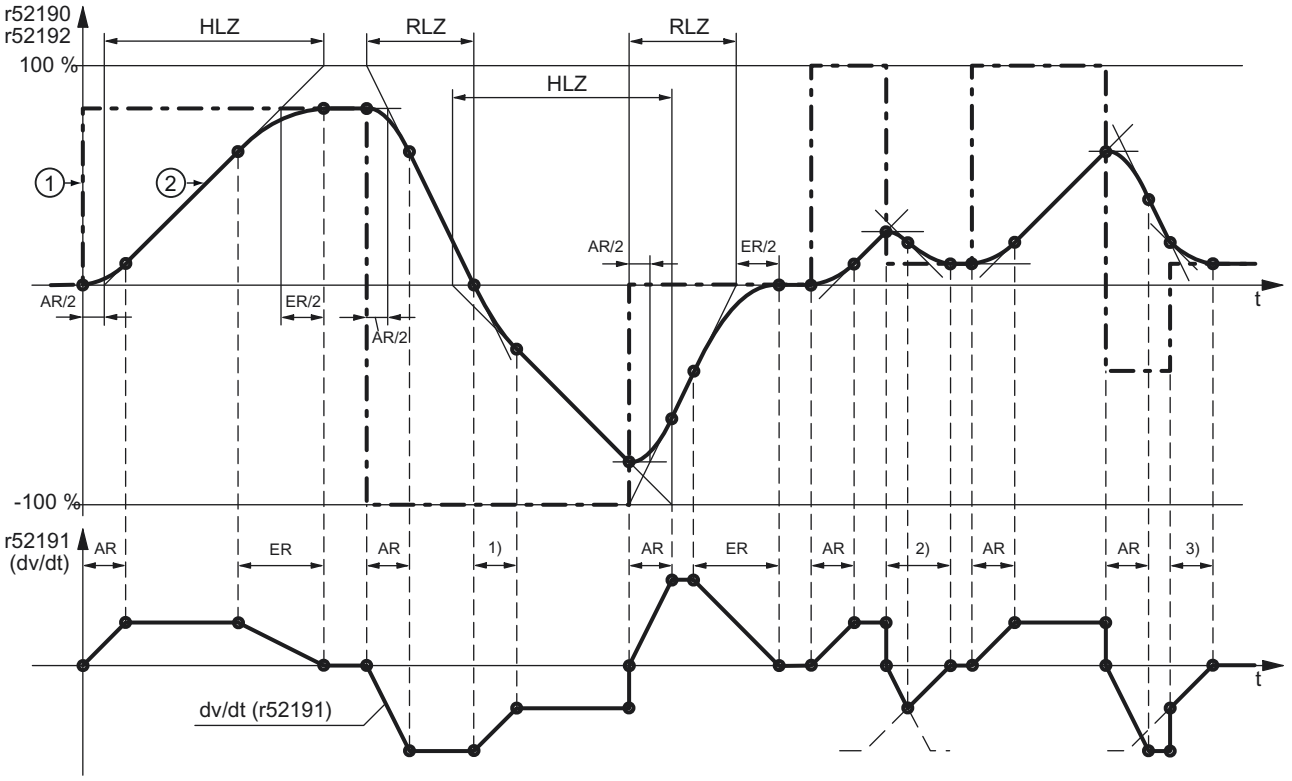

①	= Ramp-function generator setpoint	②	= Ramp-function generator output
HLZ	= Rampup time	RLZ	= Ramp-down time
AR	= Initial rounding	ER	= Final rounding

1) Transition from ramp-down incline to ramp-up incline

2) Initial rounding makes the transition to final rounding even before the maximum ramp-down incline is reached.

3) Only the last part of final rounding is performed here due to the ramp-function generator setpoint jump.

Figure 10-61 Ramp-function generator mode of operation

Operating modes for ramp-function generator rounding

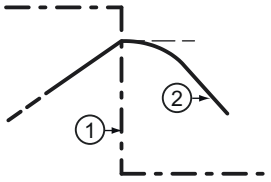

p50295 = 0:
When a setpoint reversal occurs during ramp-up (or ramp-down), the ramp-up (or ramp-down) process is interrupted and initial rounding for the ramp-down (or ramp-up) process starts immediately. This does not mean any additional increase (or decrease) in the setpoint, But rather a bend in the signal at the ramp-function generator output (i.e. a jump in the acceleration).

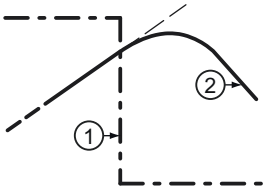

p50295 = 1:
when a setpoint reversal occurs during ramp-up or ramp-down, the ramp-up/ramp-down process slowly crosses over into ramping-down/ ramping-up. This results in an additional increase (or decrease) in the setpoint, as well as a bend in the signal at the ramp-function generator output (i.e. there is no jump in the acceleration).

Control signals

Table 10-86 Control signals for the ramp-function generator operating mode

Ramp-function generator enable Control word bit 4, p01140[c]	0 = Ramp-function generator disabled; ramp-function generator output set to 0
	1 = Ramp-function generator enabled
Ramp-function generator start Control word bit 5, p01141[c]	1 = Setpoint is switched into the ramp-function generator input
	0 = Ramp-function generator is stopped at the current value (ramp-function generator output is switched in as ramp-function generator input)
Setpoint enable Control word bit 6, p01142[c]	1 = Setpoint enabled at ramp-function generator input
	0 = Switchover to ramp-function generator setting 1 performed and 0 applied to the input (ramp-function generator output travels to 0)
Set ramp-function generator (p50640[c])	1 = The ramp-function generator output is set to the setting value (selection via p50639).
Ramp-function integrator operation (p50302)	See below and description of p50302 in the parameter list found in the SINAMICS DCM List Manual.
Enable switchover of the ramp-function integrator (p50646)	See below.
Ramp-function generator settings 2 and 3	See below.
Ramp-function generator tracking ON (p50317)	See below and description of p50317 in the parameter list found in the SINAMICS DCM List Manual.
Set ramp-function generator on switching off (p50318)	See description of p50318 in the parameter list found in the SINAMICS DCM List Manual.
Bypass ramp function generator	1 = The ramp-function generator operates with ramp-up time and ramp-down time = 0. The function is then controlled via the binector selected using p50641. It is also possible to select the option of bypassing the ramp-function generator in operating modes JOG, CREEP, and APPLY FIXED SETPOINT.

Ramp-function generator settings 1, 2, and 3

Selection via the binectors selected using p50637 and p50638.

The ramp-function generator settings that are entered via the binectors selected using p50637 and p50638 have priority over the ramp-function generator setting entered by the ramp-function integrator.

Binector state selected via parameters		Ramp-function generator setting	Active ramp-up time	Active ramp-down time	Active initial rounding	Active final rounding
p50637	p50638					
0	0	1	p50303	p50304	p50305	p50306
1	0	2	p50307	p50308	p50309	p50310
0	1	3	p50311	p50312	p50313	p50314
1	1	Not permitted; fault F60041 (setting not unique) triggered				

Ramp-function integrator

The ramp-function integrator is activated by setting p50302 to 1, 2, or 3. Once an "ON" command ("Switch on", "Jog", "Creep") has been applied, ramp-function generator setting 1 (p50303 to p50306) is used until the ramp-function generator output reaches the required setpoint for the first time.

Following this, the process is controlled by the "Enable switchover of ramp-function integrator" signal (binector selected using p50646):

- Enable switchover of ramp-function integrator = 1:
  If the ramp-function generator output reaches the required setpoint for the first time after the "ON" command has been applied, the system automatically switches over to the ramp-function generator setting selected according to p50302.
- Enable switchover of ramp-function integrator = 0:
  Once the ramp-function generator output has reached the setpoint, ramp-function generator setting 1 (p50303 to p50306) remains active until "Enable switchover of ramp-function integrator" is switched to 1. The system then switches over to the ramp-function generator setting selected according to p50302.

If the "Enable switchover of ramp-function integrator" signal is withdrawn (→ 0), the system switches back to ramp-function generator setting 1 and, when the signal is applied again (→1), remains at this setting until the ramp-function generator output has reached the setpoint again. Following this, the system switches back over to the ramp-function generator setting selected according to p50302.

When the "Switch off" command is applied, the drive is switched off via ramp-function generator setting 1.

Note

Activating "Ramp-function generator setting 2" (p50307 to p50310; selection via p50637) or "Ramp-function generator setting 3" (p50311 to p50314; selection via p50638) has priority over the ramp-function generator setting requested by the "Ramp-function integrator" function.

Ramp-function-generator tracking

The ramp-function generator output (r52190) is limited to the following values when ramp-function generator tracking is active:

(-Mlimitx 1.25 / Kp + nact) < HLG output < (+Mlimit x 1.25 / Kp + nact)

When p50170 = 1 (closed-loop torque control), the following applies:

(-IA.limit x ΦMotor x 1.25 / Kp + nact) < HLG output < (+IA.limit x ΦMotor x 1.25 / Kp + nact)

When p50170 = 0 (closed-loop current control), the following applies:

(-IA.limit x 1.25 / Kp + nact) < HLG output < (+IA.limit x 1.25 / Kp + nact)

Φmotor	Scaled motor flux (1 at rated excitation current)
nact	Actual speed value (r52167)
+Mlimit	Smallest positive torque limit (r52143)
-Mlimit	Smallest negative torque limit (r52144)
+IA.limit	Smallest positive current limit (r52131)
-IA.limit	Smallest negative current limit (r52132)
Kp	Active speed controller gain

If, however, the value added to nact would be less than 1 %, then +1 % or is -1 % is added.

The "Ramp-function generator tracking" function prevents the ramp-function generator value from moving too far from the actual speed value if the torque or current limit has been reached.

Note

When ramp-function generator tracking is active, the filtering time of the speed setpoint p50228 should be low (ideally = 0).

Limiting after ramp-function generator

This limiting stage can be used by freely selecting the input signal, independently from the ramp-function generator.

A distinguishing feature of this type of limiting is that lower limiting can also be set to positive values and upper limiting to negative values (see p50300 and p50301). In this case, a limit set using this method acts as a lower limit (lower limiting value) for the output signal of the ramp-function generator, with the sign inverted.

Example:
p50632.01 ... 04 = 1 (= 100.00%)
p50300 = 100.00 (%)
p50301 = 10.00 (%)
p50633.01-04 = 9 (= -100.00%)
results in the value range of r52170 being limited to between +10.00% and +100.00%.

Acceleration signal dv/dt (r52191)

This signal specifies the change in ramp-function generator output r52190 during the time set in p50542.

Braking distance (r52047, r52048)

This signal specifies the distance that the drive would travel if, e.g. it would be stopped using an OFF1 command.

This braking distance is calculated under the assumption that at the ramp-function generator input, a speed setpoint of 0 would be input and the speed actual value would go down to 0 with the set ramp-down time and the set rounding-off.
The calculation of the braking distance is only then correct if the ramp-down time and rounding elements do not change during the braking process.
The braking distance is output in the same unit as the encoder position actual value r0482. This means that one encoder revolution corresponds to a value of p0400×2^p0418

The braking distance is available in two different data formats:

- r52047 has the Unsigned32 data type
- r52048 has the FloatingPoint32 data type

10.12.2 Jogging

See also function diagram 3125 in the SINAMICS DCM List Manual

The JOG function can be applied via the binectors selected using p50435 index .00 to .07, and via control word bit 8 and bit 9 (r0898.8 & r0898.9) (see function diagram for logic operation).

The "Jog" function can only be executed if "Switch off" and "Operation enable" have been applied.

The "Jog" function is applied by one or more of the sources referred to (binectors, control word bits) entering the log. "1" state. During this, each source is assigned a setpoint (to be selected using p50436).

If two or more sources apply the "Jog" function at the same time, then 0 is applied as the jog setpoint.

For each source (binector, control word bit) with which the "Jog" function can be applied, p50437 may be used to determine whether the ramp-function generator is bypassed (binector r53170.11). In this case, the ramp-function generator operates with ramp-up time = 0 and ramp-down time = 0.

Procedure for applying jog:

If "Jog" is applied, the system is switched on and the jog setpoint applied via the ramp-function generator. For this procedure, refer to the section titled "Switch on/Switch off (ON/OFF1)".

Procedure for withdrawing jog:

Once the "Jog" function has been withdrawn, the procedure begins in the same way as the "Switch off" function, as outlined in the section titled "Switch on/Switch off (ON/OFF1)". Once n < nmin, the controller is disabled and, following a parameterizable time (p50085) of 0 to 60 s, the line contactor is opened (operating state o7.0 or higher). While the wait time that can be parameterized using p50085 (max. 60.0 s.) is running, the drive remains in operating state o1.3.

10.12.3 Creep

See also function diagram 3130 in the SINAMICS DCM Parameter Manual.

The "Creep" function can be activated in operating state o7 and the "Operation" state while "Operation enable" applies.

"Creep" is applied by means of one or more of the binectors selected using p50440 entering the log. "1" state. During this, each binector is assigned a setpoint (to be selected using p50441). If "Creep" is applied by several binectors, their corresponding setpoints are added together.

For each source (binector) with which the "Creep" function can be applied, p50442 may be used to determine whether the ramp-function generator is bypassed (binector r53170.12). In this case, the ramp-function generator operates with ramp-up time = 0 and ramp-down time = 0.

Level/Edge

p50445 = 0: Level-controlled
Binector selected using p50440= 0: No creep
Binector selected using p50440= 1: Creep

p50445 = 1: Edge-triggered
The application of the "Creep" function is saved when the binector makes the 0 → 1 transition. The binector selected using p50444 must be in the log. "1" state at this point. The memory is reset when this binector enters the log. "0" state.

Procedure for applying creep:

If "Creep" is applied in operating state o7, the system is switched on and the creep setpoint is applied via the ramp-function generator.

If "Creep" is applied in the "Operation" state, the drive uses the ramp-function generator to travel from the operating speed to the creep setpoint.

Procedure for withdrawing creep:

- For "Creep" when the "Switch on" command is not present:
  If all binectors that apply the "Creep" function enter the log. "0" state, the controller is disabled and the line contactor is opened (operating state o7.0 or higher) after n < nmin.
- For "Creep" from the "Operation" state:
  If all binectors that apply the "Creep" function enter the log. "0" state, and the conditions for the "Operation" state are still present, the drive uses the ramp-function generator to travel from the set creep speed to the operating speed.

See also the section titled "Switch on/Switch off (ON/OFF1)" for information on edge triggering, automatic restart, and the effect of current and torque limits when decelerating.

10.12.4 Fixed setpoint

See also function diagram 3115 in the SINAMICS DCM List Manual.

The “Fixed setpoint” function can be applied via the binectors selected using p50430 index .00 to .07, and via p50680 and p50681 (see function diagram for logic operation).

"Fixed setpoint" is applied by one of more of the sources referred to (binectors) entering the log. "1" state. During this, each source is assigned a setpoint (to be selected using p50431). If "Fixed setpoint" is applied by several sources at the same time, their corresponding setpoints are added together (limited to ±200%).

For each source with which "Fixed setpoint" can be applied, p50432 may be used to determine whether the ramp-function generator is bypassed. In this case, the ramp-function generator operates with ramp-up time = 0 and ramp-down time = 0.

Response when "Fixed setpoint" is applied:

The fixed setpoint is switched in instead of the r52211 setpoint.

Withdrawal of "Fixed setpoint":

If all possible sources for switching in the fixed setpoint are in the log. "0" state again, r52211 is switched through as a setpoint.

10.13 Encoder evaluation

SINAMICS DCM can evaluate speed/position encoders.

Two encoders can be evaluated simultaneously. Encoder 1 is connected to connector X177 on the CUD. Encoder 2 is connected to an encoder module SMC10 or an encoder module SMC30, which is connected via DRIVE-CLiQ with the CUD.

Encoder 1 is often referred to as the motor encoder as it is normally attached directly to the motor.
Encoder 2 is often referred to as the load encoder as it is normally attached directly to the load.

Table 10-87 Supported encoder types

Setting for p0400	Encoder type	Encoder 1 p0400[0]	Encoder 2 p0400[1]
0	No encoder	✓	✓
1001	Resolver 1 speed	x	✓
1002	Resolver 2 speed	x	✓
1003	Resolver 3 speed	x	✓
1004	Resolver 4 speed	x	✓
3001	1024 HTL A/B R	✓	✓

Setting for p0400	Encoder type	Encoder 1 p0400[0]	Encoder 2 p0400[1]
3002	1024 TTL A/B R	✓	✓
3003	2048 HTL A/B R	✓	✓
3005	1024 HTL A/B	✓	✓
3006	1024 TTL A/B	✓	✓
3007	2048 HTL A/B	✓	✓
3008	2048 TTL A/B	✓	✓
3009	1024 HTL A/B unipolar	✓	✓
3011	2048 HTL A/B unipolar	✓	✓
3020	2048 TTL A/B R, with sense	x	✓
3081	SSI, singleturn, 24 V	x	✓
3082	SSI, multiturn 4096, 24 V	x	✓
3088	1024, HTL, A/B, SSI, singleturn	x	✓
3090	4096, HTL, A/B, SSI, singleturn	x	✓
9999	User defined	✓	✓
20000	Encoder from OEM list	x	✓
✓ = encoder type is supported x = encoder type is not supported, setting not permitted			

The encoder evaluation determines the current actual speed value and the actual position value for both encoders (see function diagrams 4704, 4710 and 4711 in the SINAMICS DCM List Manual).

Furthermore, for both encoders the encoder control word and the encoder status word according to PROFIdrive are available (see function diagrams 4720, 4730 and 4735 in the SINAMICS DCM List Manual).

10.13.1 Actual speed values

The calculation of the actual speed value can be seen in the following function diagrams:

- FP4710 (for encoder 1)
- FP4711 (for encoder 2)

The actual speed values of the encoders are always available as freely interconnected BICO outputs.

- r0061[0]: Actual speed value for encoder 1
- r0061[1] = r3370: Actual speed value for encoder 2

If you want to use an actual speed value from the encoder as an actual-value input for the speed controller, you need to set the actual speed value selection p50083 to 1 (for encoder 1) or to 5 (for encoder 2). See FP6810.

The maximum speed (i.e. the 100% speed) is set via p2000 in both cases.

Actual position values

G1_XIST1	Encoder 1 actual position value 1
G1_XIST2	Encoder 1 actual position value 2
Gn_XIST2	Fault code
G2_XIST1	Encoder 2 actual position value 1
G2_XIST2)	Encoder 2 actual position value 2

For description, refer to Chapter "Control and status words for encoders (Page 398)".

10.13.2 Control and status words for encoders

An encoder interface is defined in the PROFIBUS Profile for drive technology (PROFIdrive V4.1). This interface defines a control and status word for encoders.
They are available in the following parameters:

- r0480[0] = G1_STW encoder 1 control word
- r0480[1] = G2_STW encoder 2 control word
- r0481[0] = G1_ZSW encoder 1 status word
- r0481[1] = G2_ZSW encoder 2 status word

The bit assignments of the control and status words for the encoders can be seen in the following function diagrams:

- FP4720 (control word for encoders 1 and 2)
- FP4730 (status word for encoders 1 and 2)

For description, refer to Chapter "Control and status words for encoders (Page 398)".

10.14 Speed controller

The speed controller is a PI controller with the following additional properties:

Start pulse

When starting the speed controller (i.e. when the controller is enabled) the I component can start with a selectable value. This is necessary for suspended/hanging loads in order to prevent the load from briefly sagging.

Adaptation

P gain and integral action time can be changed as a function of any signal (e.g. from the actual speed value).

Droop

Droop (which can be switched in) can be implemented by feeding back the I component to the input. As a consequence, the controller does not precisely control to the setpoint, but permits a continuous setpoint-actual value deviation.

This is required, for example, if two drives are mechanically coupled with one another (e.g. for a production machine where drives are coupled through the material web being processed). In this case, the droop prevents that the two drives start to operate against one another, although both operate with closed-loop speed control. In the case that a mechanical connection is interrupted (e.g. if the material web breaks), then the speed of the drive operating with droop only slightly changes.

Lead/lag element

The lead/lag element is used to improve the stability of the speed control. If required, it can be inserted in the actual speed value channel.

Remark: The functions shown in function diagram 6810 have the following execution sequence:

- Generation of the speed setpoint (r52174)
- Selection of the actual speed value (r52167)
- PT1 element (r52179)
- Bandstop filter 1 (r52177)
- Bandstop filter 2 (r52178)
- DT1 element (r52169)
- Lead/lag element (r52156)
- Generation of the setpoint/actual-value difference (r52165)

Reference model

The reference model represents the P-controlled speed control loop and creates an appropriately processed speed setpoint for the I-component. This means that the I-component largely plays no role for setpoint changes, with the consequent improved, overshoot-free response.

The reference model contains a PT2 element and a dead time element to emulate the controlled system. See function charts 6810 and 6815.
Further, it is possible to feed in an external reference model (e.g. generated using DDC function diagrams).

The reference model is set using the following parameters:

p50237 natural frequency
p50238 damping
p50239 deadtime
p50240 activation

The reference model is correctly set when the characteristics of the reference model output (r52154) and the actual speed value (r52167) are virtually identical when the I-component of the speed controller (p50224 = 0) is disabled.

Example

The following diagram shows the step response of the speed controller after carrying out the optimization run, if the reference model is not activated.

r52174 Speed setpoint
r52167 Actual speed value

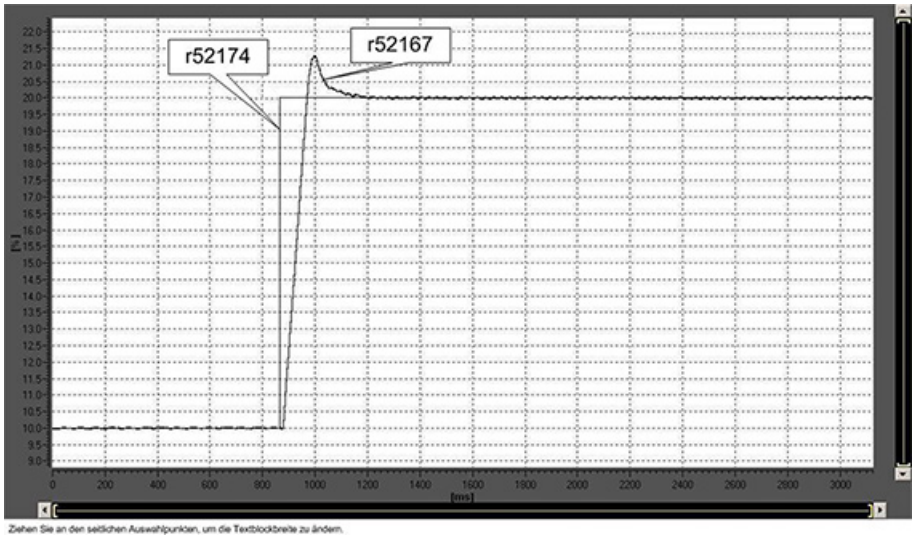

The following diagram shows the setting of the reference model.

r52154 Reference model output
r52167 Actual speed value

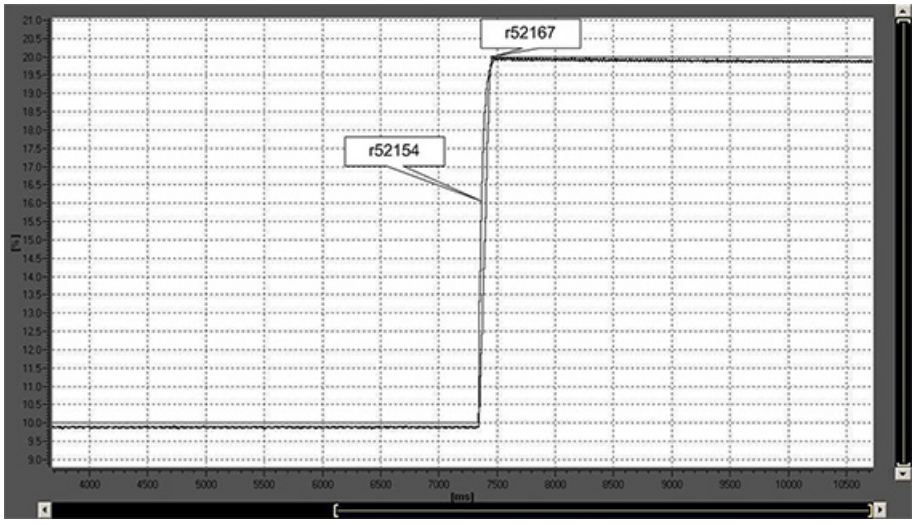

The following diagram shows the step response of the speed controller if the same controller parameters are set as shown previously, however, with the reference model activated.

r52174 Speed setpoint
r52167 Actual speed value

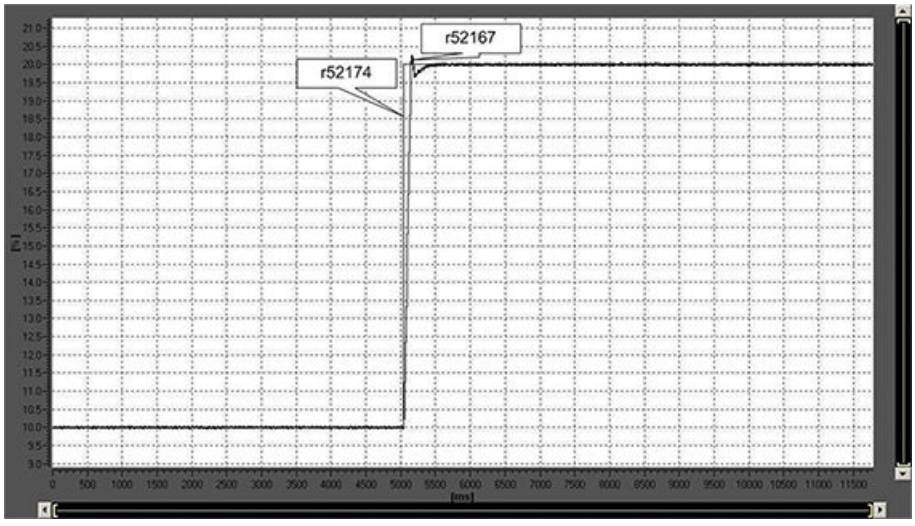

Note

For the procedure to manually optimize the speed controller, see Chapter "Manual optimization (Page 315)".

Using the speed controller for other applications

If the SINAMICS DCM is not used to control the speed of a motor, but instead to control the voltage of a capacitive load, it may be advantageous to support the speed controller operating as voltage controller with a load connection. The "Load connection" function block is available for this purpose. This function block is shown in function diagram 6851. It provides an additional current setpoint that is preferably fed in at p50601[3] (see function diagram 6840).

10.15 Adaptation of the armature and field current controller

The current controller (armature current controller and field current controller) of the SINAMICS DCM operate with a controlled system that is very non-linear.

Types of non-linearity

There are 2 types of non-linearity:

1. **Non-linearity of the gating unit**
   In the armature circuit, there is a significant difference in the controlled system gain (= line-commutated thyristor converter in the B6 bridge connection) between discontinuous and continuous current.

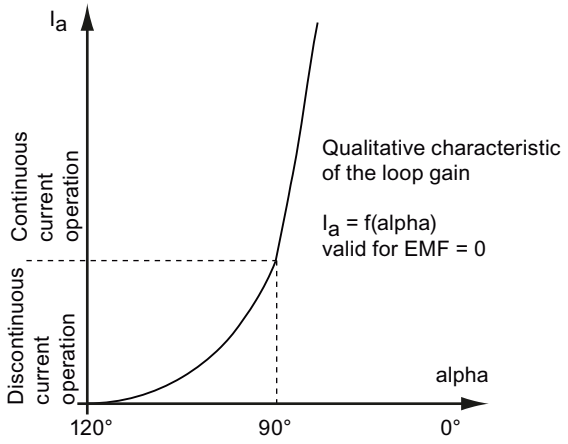

   In the field circuit, the system is essentially always in the discontinuous current range, but the control characteristic of the B2Z or B2 bridge manifests a significant degree of non-linearity.

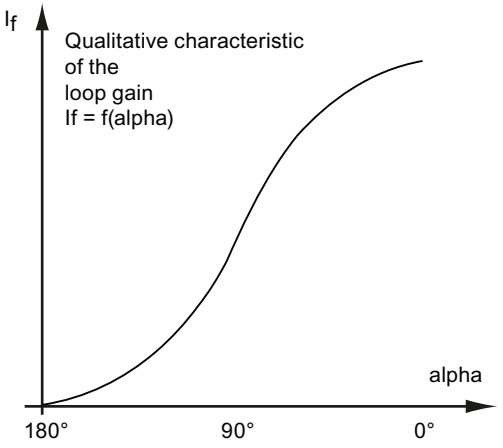

2. **Non-linearity of the load inductance** (= armature circuit or field circuit of the motor):
   At higher currents, both the armature winding as well as the field winding - or also when there is a smoothing reactor available in the armature circuit, can go into the magnetic saturation range; as a consequence, they can have a significantly lower inductance than at low currents.
   The inductance as a function of the current is modelled according to the following diagram:

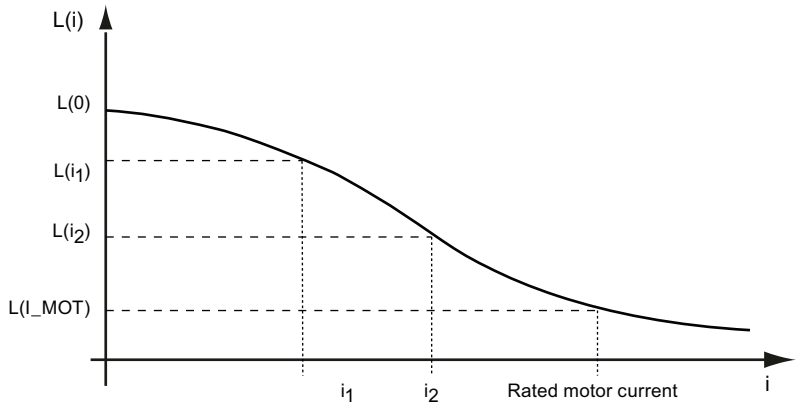

Inductance at a very low current:
L(0) = p50111 (La) or p50116 (Lf)
Inductance at the rated motor current:
L(I_Mot) = p50111×p51591 (La×λ_a) or p50116×p51597 (Lf×λ_f)

Effect of the adaptation

The SINAMICS DCM converter provides the option of adapting the gain of the armature current controller or the field current controller to the existing non-linearities:

- **Compensating gating unit non-linearities:**
  The controller gain is normally set so that in the range of the largest controlled system gain (i.e. where the armature is in the discontinuous current range or for the field, with a firing angle of 90°) the required control behavior is obtained. For other currents, the current controller becomes appropriately slower. When the current controller adaptation is activated, the current controller gain is increased inversely proportional to the controlled system gain. As a consequence, the controller behavior is approximately the same at any current.
- **Compensating non-linear inductances**
  The controller gain is normally set so that at a high current, the required control behavior is obtained. At low currents, the current controller becomes appropriately slower. When the current controller adaptation is activated, the current controller gain is increased proportionally to the inductance. As a consequence, the controller behavior is approximately the same at any current.

Activating the controller adaptation

The current controller adaptation is not activated in the factory setting.
Reason:
When the adaptation is set, this means that the control behavior must be precisely checked at various currents. In many applications, the improved control behavior that can be thus achieved isn't necessary anyway. This is why in these cases it doesn't make any sense to "invest" this time when commissioning the system.

Setting the armature current controller adaptation

With the armature current controller, it is possible to calculate the adaptation using p50570 from the actual value or from the setpoint of the armature current. The adaptation to non-linear inductances can be activated using p50571, the discontinuous-continuous current adaptation can be activated using p50572. The adaptation factor can be limited

using p50573. In order to be able to incorporate the adaptation at the armature current controller, connector output r52350 must be interconnected to connector input p50175 (Kp adaptation). With this intervention, the armature current controller gain is increased or decreased depending on the armature current actual value and/or setpoint (this is selected using p50570). The calculations of the adaptations are now created to change the gain.

Setting the field current controller adaptation

For the field current controller, it is possible to calculate the adaptation from the actual value or from the setpoint of the field current using p50575. The adaptation to non-linear inductances can be activated using p50576; the adaptation to the non-linearity of the gating unit, can be activated using p50577. The adaptation factor can be limited using p50578.
In order to be able to incorporate the adaptation at the field current controller, connector output r52355 must be interconnected to connector input p50267 (Kp adaptation). With this intervention, the field current controller gain is increased or decreased depending on the field current actual value and/or setpoint (this is selected using p50575). The calculations of the adaptations are now created to change the gain.

The corresponding function diagrams show additional details regarding how to activate the gain adaptation and the various setting options:

FP 6853	Calculating the adaptation factor for the armature current controller gain
FP 6855	Intervention to adapt the armature current controller gain (p50175 = r52350 establishes the intervention)
FP 6908	Calculating the adaptation factor for the armature current controller gain intervention to adapt the armature current controller gain (p50267 = r52355 establishes the intervention)

10.16 Technology controller

Features

Simple control functions can be implemented with the technology controller, e.g.:

- Level control
- Temperature control
- Dancer role position control
- Pressure control
- Flow control
- Simple control without higher-level controller
- Tension control

The technology controller features:

- Two scalable setpoints
- Scalable output signal

- The output limits can be activated and deactivated via the ramp-function generator.
- The D component can be switched into the control deviation or actual value channel.

Description

The technology controller is designed as a PID controller, whereby the differentiator can be switched to the control deviation channel or the actual value channel (factory setting). The P, I, and D components can be set separately. A value of 0 deactivates the corresponding component. Setpoints can be specified via two connector inputs. The setpoints can be scaled via parameters (p2255 and p2256). A ramp-function generator in the setpoint channel can be used to set the setpoint ramp-up/ramp-down time via parameters p2257 and p2258. The setpoint and actual value channel each have a smoothing element. The smoothing time can be set via parameters p2261 and p2265.

Pre-control can be integrated via a connector input.

The output can be scaled via parameter p2295 and the control direction reversed. It can be limited via parameters p2291 and p2292 and interconnected as required via a connector output (r2294).

The actual value can be fed in, for example, via an analog input.

If a PID controller has to be used for control reasons, the D component is switched to the setpoint / actual value difference (p2263 = 1) unlike in the factory setting. This is always necessary when the D component is to be effective, even if the reference variable changes. The D component is only activated if p2274 > 0.

Commissioning with STARTER

The "technology controller" function module can be activated via the commissioning wizard or the drive configuration (configure DDS).

You can check the actual configuration in parameter r0108.16.

Application example: Level control

The objective here is to maintain a constant level in the container.

This is carried out by means of a variable-speed pump in conjunction with a sensor for measuring the level.

The level is determined via an analog input and sent to the technology controller. The level setpoint is defined in a fixed setpoint. The resulting controlled variable is used as the setpoint for the speed controller.

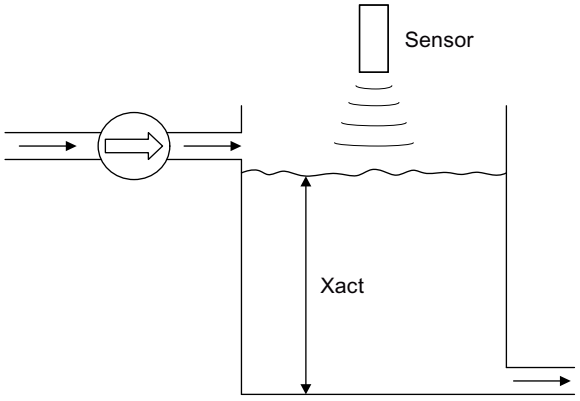

Figure 10-62 Level control: Application

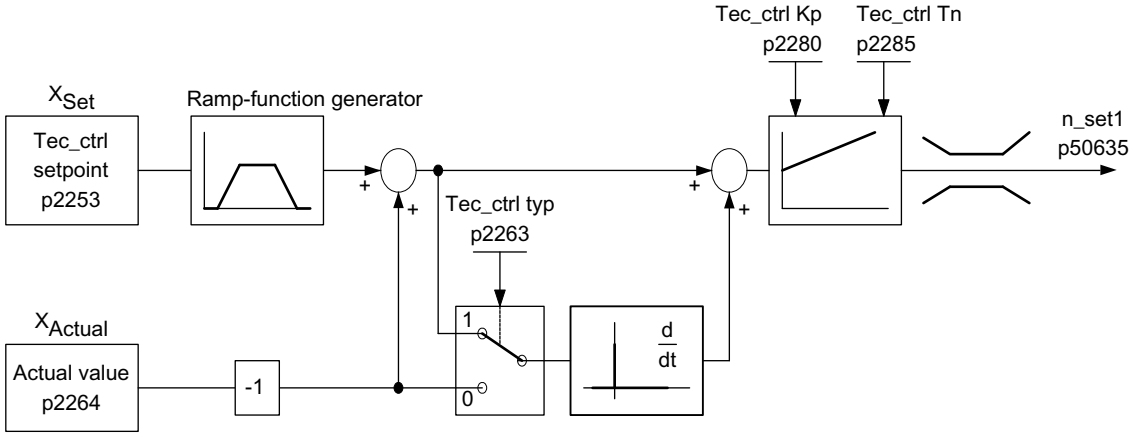

Figure 10-63 Level control: Controller structure

Table 10-88 Important parameters for the level control

Parameter	Designation	Example
p50625	n_set after the ramp-function generator	p50625= r2294 Tec_ctrl outp_sig
p2200	BI: Technology controller enable	p2200 = 1 Technology controller enabled
p2253	CI: Technology controller setpoint 1	p2253 = r52401 fixed value
p2263	Technology controller type	p2263 = 1 D component in fault signal
p2264	CI: Technology controller actual value (X_{ACTUAL})	p2264 = r52015 analog input AI1 of the CUD
p2280	Technology controller p-gain	p2280 Determine by optimization
p2285	Technology controller integral action time	p2285 Determine by optimization

Function diagrams (see SINAMICS DCM List Manual)

- 7958 Closed-loop control (r0108.16 = 1)

Overview of important parameters (see SINAMICS DCM List Manual)

- p2200 BI: Technology controller enable
- p2253[0...n] CI: Technology controller setpoint 1
- p2254[0...n] CI: Technology controller setpoint 2
- p2255 Technology controller setpoint 1 scaling
- p2256 Technology controller setpoint 2 scaling
- p2257 Technology controller ramp-up time
- p2258 Technology controller ramp-down time
- p2261 Technology controller setpoint filter time constant
- p2263 Technology controller type
- p2264[0...n] CI: Technology controller actual value
- p2265 Technology controller actual value filter time constant
- p2280 Technology controller proportional gain
- p2285 Technology controller integral action time
- p2289[0...n] CI: Technology controller pre-control signal
- p2295 Technology controller output scaling

10.17 Switch-on command for holding or operational brake

See also the SINAMICS DCM List Manual, function diagram 2750

The signal for controlling the brake is available at binector r53210[0]:

r53210[0] = 1 ⇒ close brake
r53210[0] = 0 ⇒ release brake

This binector must be wired to a digital output in order to activate a brake; see function diagrams 2055, 2060, and 2065 in the SINAMICS DCM List Manual.

The following parameters affect the function of the brake-control signal:

p50080 = 0 No brake

p50080 = 1 The brake is a holding brake:
The "Close brake" command is only applied when n < nmin (p50370, p50371).

p50080 = 2 The brake is an operational brake:
The "Close brake" command is applied even if the motor is running.

p50087 Brake-release time:

- A positive value prevents the motor from working against a brake that is currently being opened
- A negative value causes the motor to work against a brake that is still closed in order to prevent a short-term torque-free state.

p50088 Brake-closing time:
Causes the motor to keep applying torque while the brake is closing

p50319 Delay time for ramp-function generator enable:
Following a controller enable, the setpoint 0 is applied during the time set here. This time should be set so that the brake has actually been released once it has elapsed. This is mainly necessary when p50087 is set to a negative value.

The figures below illustrate the brake control timing interval when a level change occurs at the "Switch on/Shutdown" (terminal X177.12) and "Operation enable" (terminal X177.13) inputs.

Where brake control is concerned, the "Jog", "Creep", or "Quick stop" input commands act in the same way as "Switch on/Switch off", and the "Disconnection" or "E-STOP" input commands act in the same way as when the "Operation enable" command is withdrawn.

The "Close brake" command is output during the optimization run for precontrol and current controller (p50051 = 23, 24 and 25).

Brake-release time (p50087) positive

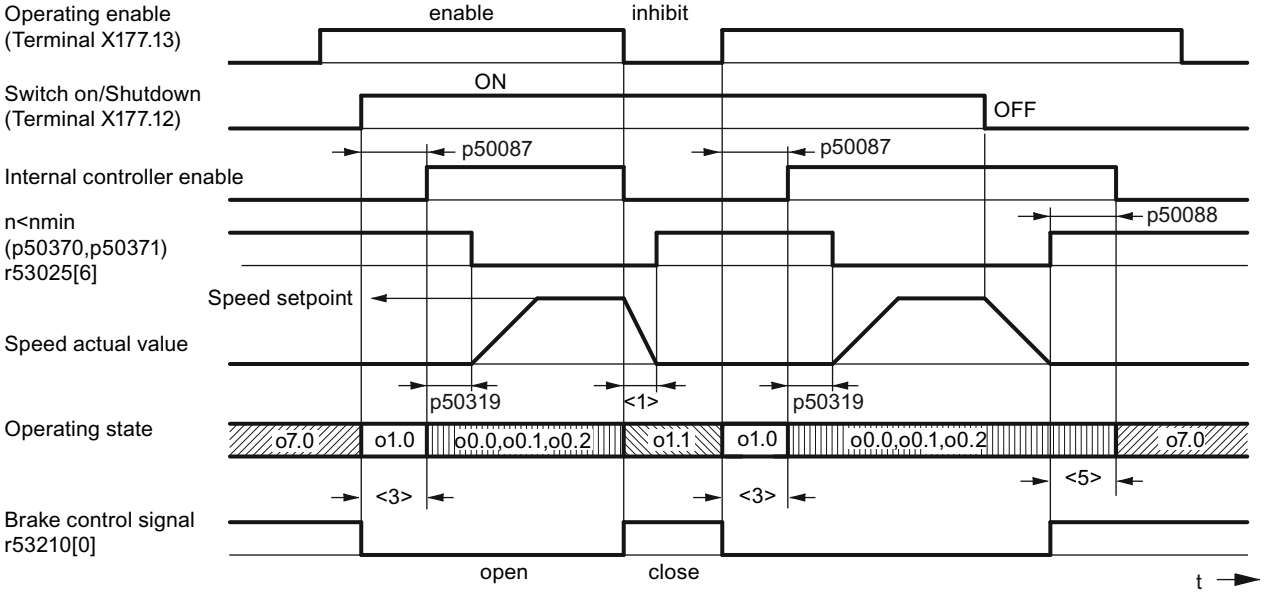

Figure 10-64 Operational brake (p50080 = 2), brake-release time (p50087) positive

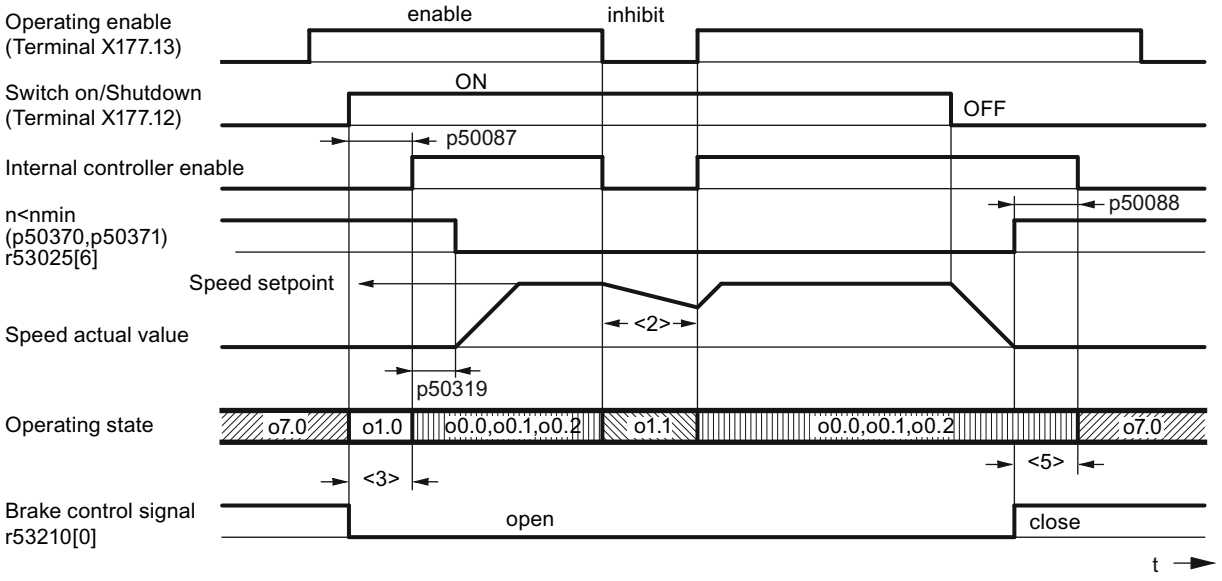

Footnotes for the two figures above

<1> Mechanical deceleration of drive by means of operational brake

<2> Drive coasting down; "Close holding brake" first applied when n < nmin

<3> Time for brake to be released before motor applies torque (p50087 positive)

<5> Time for brake to be closed, during which motor continues to apply torque (p50088)

Figure 10-65 Holding brake (p50080 = 1), brake-release time (p50087) positive

Brake-release time (p50087) negative

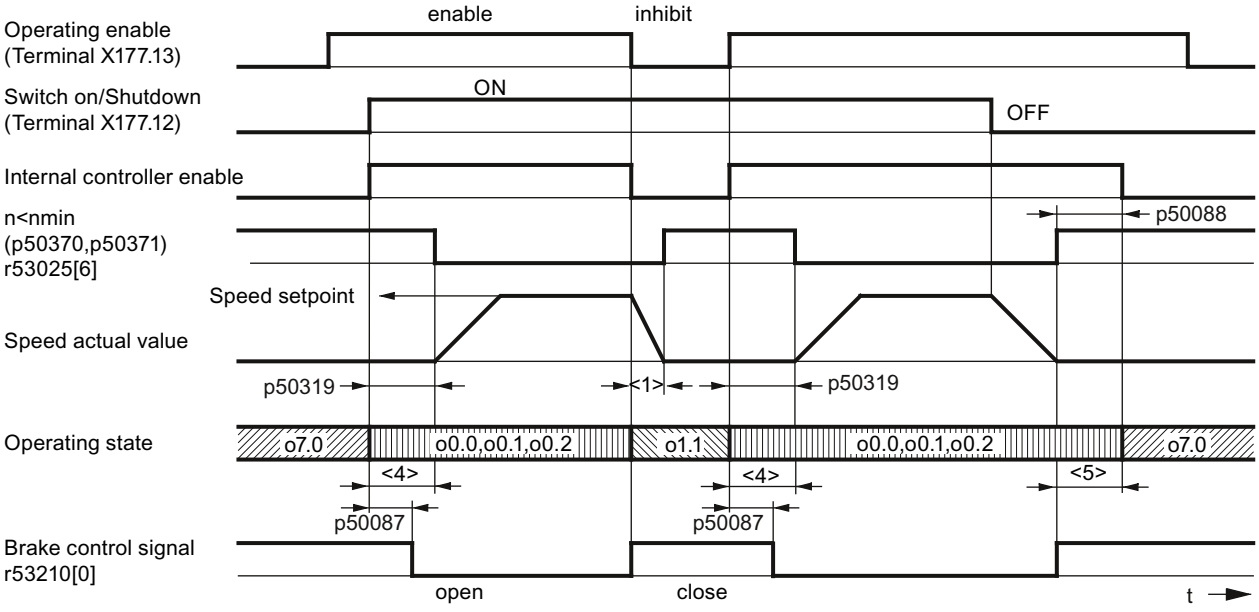

Figure 10-66 Operational brake (p50080 = 2), brake-release time (p50087) negative

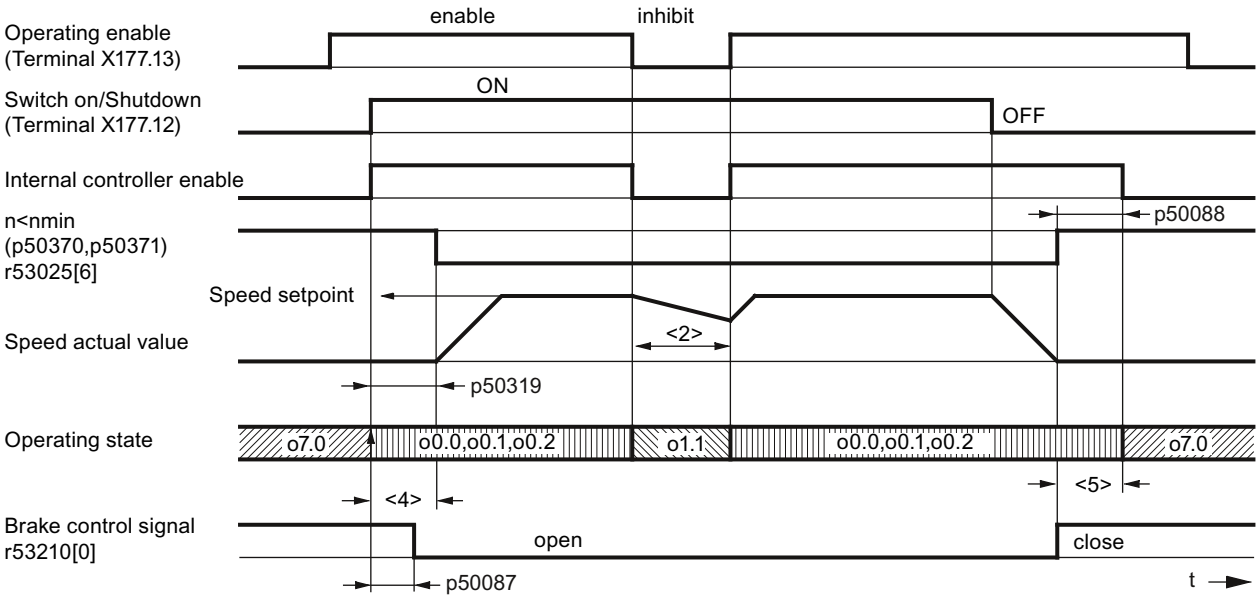

Footnotes for the two figures above

<1> Mechanical deceleration of drive by means of operational brake

<2> Drive coasting down; "Close holding brake" first applied when n < nmin

<4> Here, motor works against the brake, which is still closed (p50087 negative)

<5> Time for brake to be closed, during which motor continues to apply torque (p50088)

Figure 10-67 Holding brake (p50080 = 1), brake-release time (p50087) negative

10.18 Switching on auxiliary circuits

This function serves as a switch on command for auxiliaries (e.g. motor fans).

The "Switch on auxiliary circuits" signal is available at binector r53210.2:

r53210[2] = 0 ⇒ auxiliaries OFF
r53210[2] = 1 ⇒ auxiliaries ON

This binector must be wired to a digital output in order to activate the auxiliary circuit; See SINAMICS DCM List Manual, function diagrams 2055, 2060 and 2065.

The "Switch on auxiliaries" goes to 1 at the same time as the "Switch on" command. Following this, the system remains in operating state o6.0 for a parameterizable time (p50093); only once this has elapsed is the line contactor closed.

When the "Switch off" command is applied, the firing pulses are disabled and the line contactor drops out after n < nmin. After a parameterizable time (p50094), the "Switch on auxiliaries" signal goes to 0 If, however, the "Switch on" command is issued again before this time elapses, operating state o6.0 is not retained; instead, the line contactor is immediately closed.

10.19 Operating hours counter, unit fan

A fan for the power unit can be controlled via r53135[0]. The isolated relay output terminal 120/121 is available to control the fan.

Operating hours counter

Every unit fan has an operating hours counter. The counter states are displayed at parameter r50960[0..4].

r50960[0..3] Operating hours counter for the fans connected at the internal unit connectors XV1 to XV4

r50960[4] For SINAMICS DCM Control Modules, operating hours counter for the fan controlled via r53135[0].

The operating hours counter is incremented, if

- SINAMICS DCM switches-on the corresponding fan AND
- it actually rotates
  i.e. the speed is higher than 5 % of the response threshold of the fan monitoring (this does not apply to r50960[4])

The operating hours counters for unit fans that are not available are not incremented.

Monitoring the fan lifetime

The planned lifetime for each fan is set at p50961[0...4]; the factory setting is 30000 hours.

Alarm A60165 is output 500 hours before the planned lifetime is reached. It is recommended that the corresponding fan is replaced at the next opportunity when the system is not operational (scheduled downtime).

If the lifetime for a fan is set to zero (p50961[0...4] = 0.0 hours), then the fan lifetime monitoring for this fan is disabled.

The corresponding operating hours counter is reset to 0 by setting parameter p50962[0...4] to 1. This should be done each time that a fan is replaced!

See also the SINAMICS DCM List Manual, function diagram 8045.

10.20 Thermal overload protection for the DC motor (I2t monitoring of the motor)

I^2t monitoring protects the motor against impermissible loads.

NOTICE
No full motor protection I^2t monitoring only provides an approximate representation of the motor's thermal image. In the factory setting, when switching off the drive, the calculated temperature is saved in a non-volatile fashion; when the drive is switched on again, the saved value is taken into account when continuing to calculate the temperature. This response can be adapted using p50140. When p50114 = 0, I^2t monitoring is disabled.

Note

- Please observe the manufacturer's specifications if you are using other motor types.
- If you are using DC motors 1G.5/1H.5 as per Catalog DA12, p50113 must be set to 1.00.

Note

The I^2t monitoring model calculates the temperature of the DC motor based on constant ventilation conditions. Axial fans mounted on the main axis are not common in the application of DC drives; therefore, they are not covered by the I^2t monitoring model for DCM.

Adaptation

Table 10-89 Parameter settings for I^2t monitoring

Parameter		Data
p50114	Thermal time constant	Time constant [s] with which I^2t monitoring is to operate
p50100	Rated armature current	Determination of permissible continuous current for motor: Permissible continuous current = p50100 × p50113
p50113	Continuous-current factor	
p50140	Motor I^2t monitoring, response when starting	Sets the response when starting for the motor I2t monitoring: 2: start I^2t at zero 12: start I^2t with the saved value (factory setting)

Advance-alarm characteristic/Shutdown characteristic

If, for example, the motor load is continuously at approximately 125% of the permissible continuous current for the motor, alarm A60037 responds after a time constant (p50114) has elapsed. If there is no reduction in the load, the drive is shut down when the shutdown characteristic is reached, and error message F60137 is displayed.
Advance-alarm/shutdown times for other loads may be taken from the diagram below.

Alarm and fault initiation from the motor I²t monitoring

The diagrams below show the time after which an alarm or fault is triggered when a new, constant load is suddenly switched in following an extended period of preloading (> 5×T_th).

T_th = p50114 (motor thermal time constant)

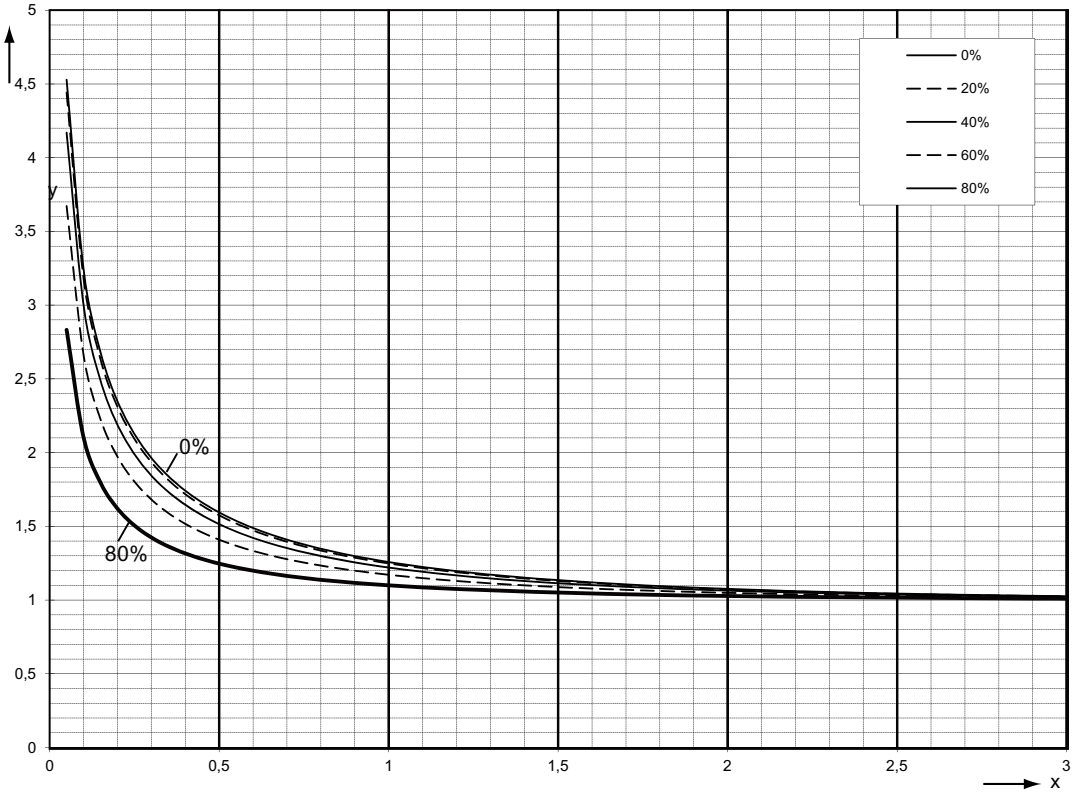

y ... Load current/permissible continuous current (p50100 × p50113)

x ... time/thermal time constant of motor

Figure 10-68 I2t monitoring of the motor: Alarm triggering

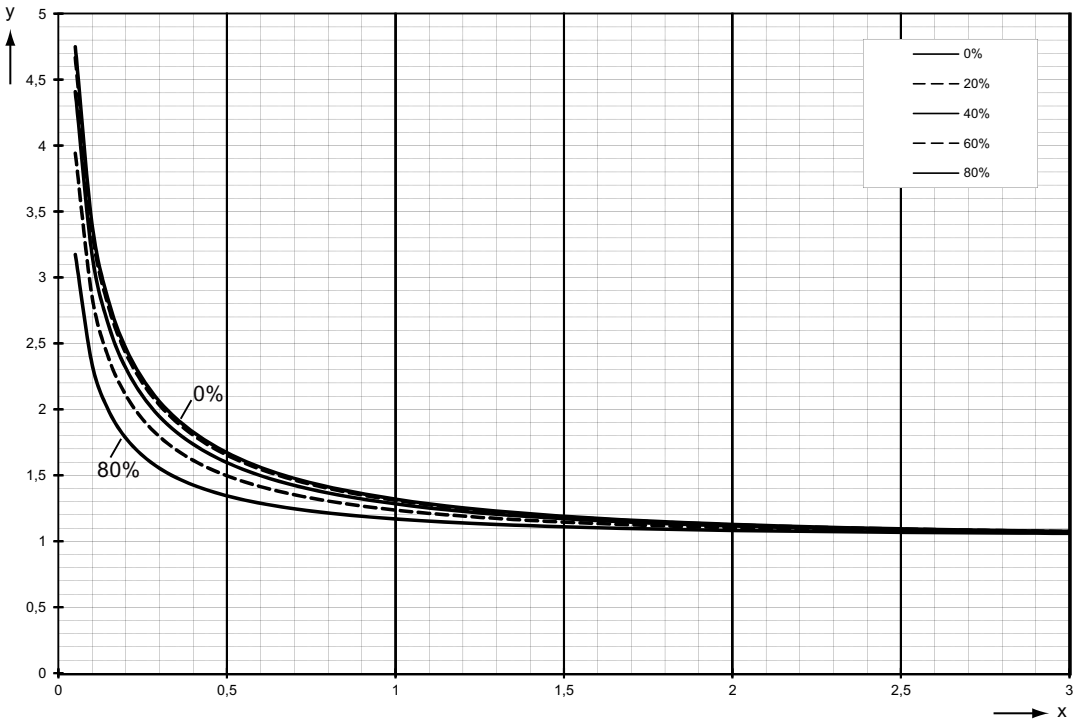

y ... Load current/permissible continuous current (p50100 × p50113)

x ... time/thermal time constant of motor

Figure 10-69 I2t monitoring of the motor: Fault triggering

Determining the thermal equivalent time constant (p50114)

It should be noted that the thermal equivalent time constant depends on the maximum overcurrent.

Thermal equivalent time constant of DC motors 1G . 5/1H . 5 according to Catalog DA12 T (configuring notes for Catalog DA 12):

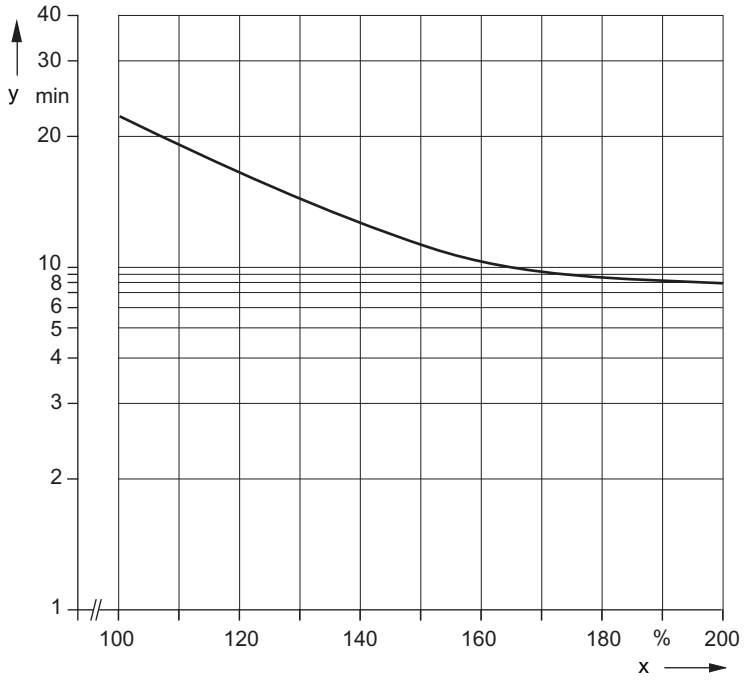

y ... T_{therm}, thermal equivalent time constant [min] (p50114)

x ... I/I_N [%]
I = Maximum overcurrent at which the motor is operated
I_N = Rated armature current for the motor (p50100)

Figure 10-70 Thermal equivalent time constant

10.21 Measuring the motor temperature

SINAMICS DCM provides the possibility of evaluating a temperature sensor integrated in the motor (see the SINAMICS DCM List Manual, function diagram 8030).



⚠ WARNING

Electric shock in the event of voltage flashovers at the temperature sensor

Voltage flashovers in the signal electronics can occur for motors without safe electrical separation of the temperature sensors.

- Use temperature sensors that comply with the specifications relating to safe electrical separation.

The following measuring sensors can be evaluated.

- **KTY84**
  approx. 350 Ω up to approx. 2600 Ω at -40 °C to +300 °C
  positive temperature coefficient, almost a linear characteristic

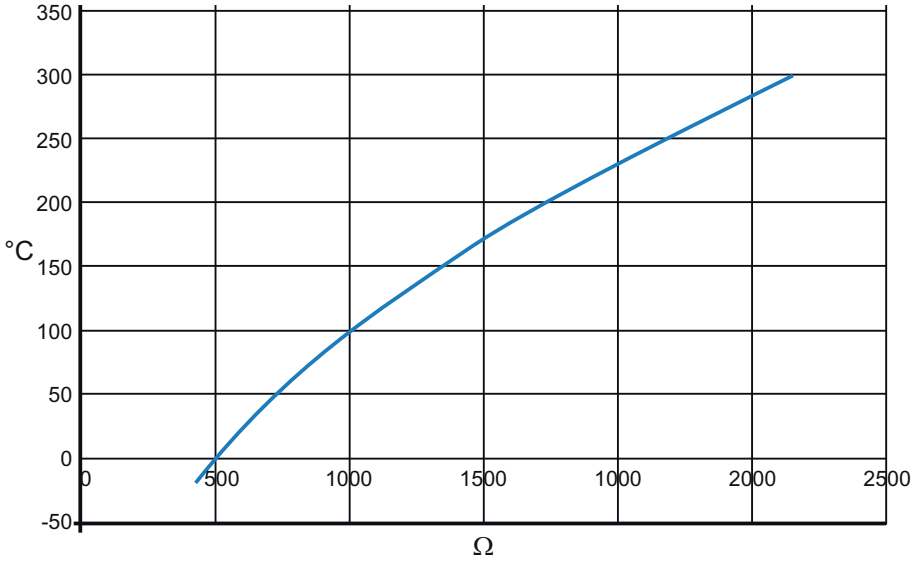

Figure 10-71 Characteristic KTY84

- **PTC thermistor** acc. to DIN 44081 / 44082
  600 Ω, 1200 Ω, 1330 Ω or 2660 Ω response temperature
  positive temperature coefficient, the resistance changes suddenly at the response temperature
  Note:
  It is not possible to determine the actual temperature, it is only possible to identify as to whether the response temperature has been exceeded or not.
- **PT100**
  approx. 80 Ω up to approx. 280 Ω at -40 °C to +500 °C
  positive temperature coefficient, almost a linear characteristic

- **PT1000**
  approx. 840 Ω up to approx. 2980 Ω at -40 °C to +550 °C
  positive temperature coefficient, almost a linear characteristic
- **NTC thermistor** K227/S1/1.8 kΩ/KER
  approx. 200 Ω at 190 °C to 1.8 kΩ at 100 °C

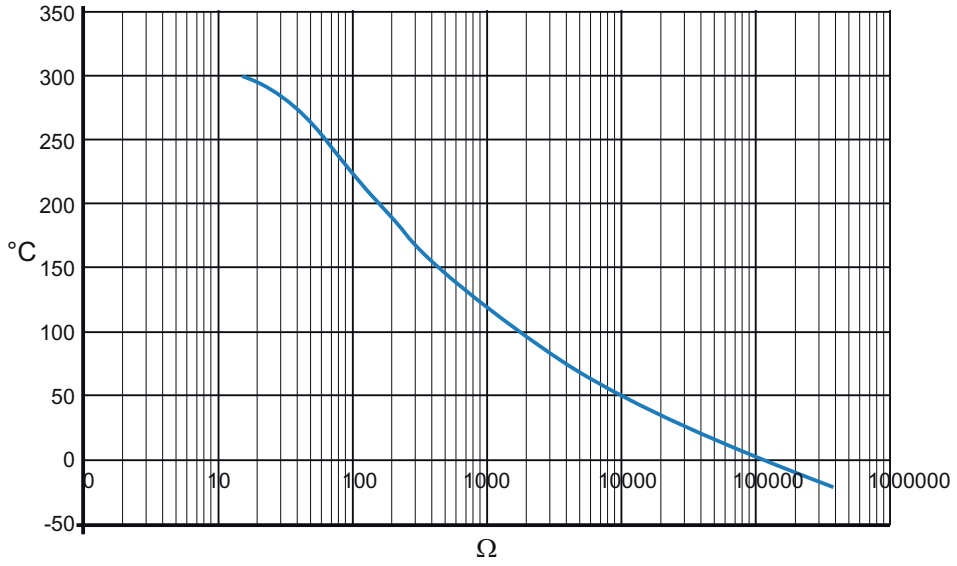

Figure 10-72 Characteristic K227

10.22 Speed-dependent current limiting

Speed-dependent current limiting protects the DC motor's commutator and brushes at high speeds.

The settings required for this (p50104 to p50107) must be taken from the motor rating plate.

Additionally, the maximum operating speed of the motor (p50108) must be entered; this must match the actual maximum operating speed.

The actual maximum operating speed is determined as follows:

- Using p2000 in cases where the actual speed value comes from an incremental encoder
- Using p50741 in cases where the actual speed value comes from an analog tachometer
- Using p50115 in the case of operation without a tachometer

In addition, speed-dependent current limiting must be activated by setting p50109 = 1.

NOTICE
Excessive stress on the commutator and brushes due to incorrect setting
Making an incorrect setting for speed-dependent current limiting can lead to excessive stress on the commutator and brushes, which in turn results in a significantly reduced service life for the brushes.

Setting speed-dependent current limiting for motors with a bend in the commutation characteristic

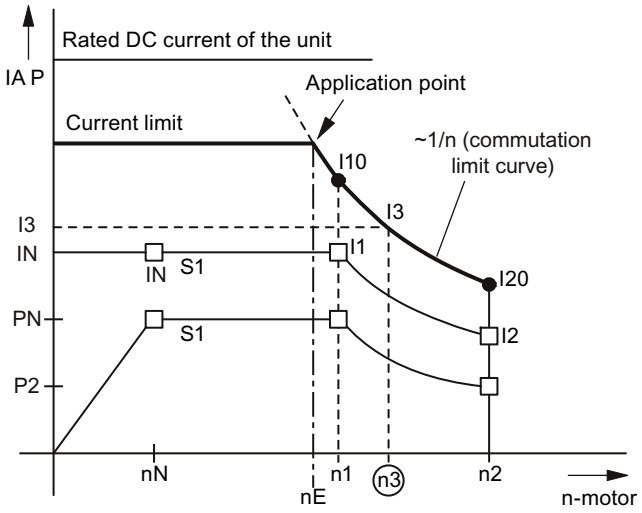

☐	Motor rating plate data	(n3)	Maximum operating speed
●	Permissible limit values	I10	1.4 x I1
nE	Point where the speed-dependent current limiting takes effect	I20	1.2 x I2

Figure 10-73 Setting speed-dependent current limiting for motors with a bend in the commutation characteristic

The current limiting curve is determined using n1, I10, n2, and I20.

Parameter:

p50104 = n1
p50105 = I1 (unit calculates I10 from this)
p50106 = n2
p50107 = I2 (unit calculates I20 from this)
p50108 = n3 (defines the speed scaling)
p50109 = 0 ... speed-dependent current limiting switched off
= 1 ... speed-dependent current limiting switched on

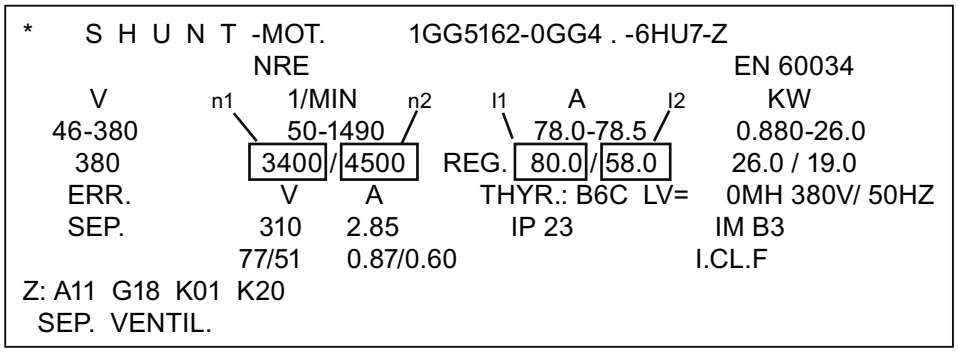

Figure 10-74 Example of a motor rating plate

Setting speed-dependent current limiting for motors without a bend in the commutation characteristic

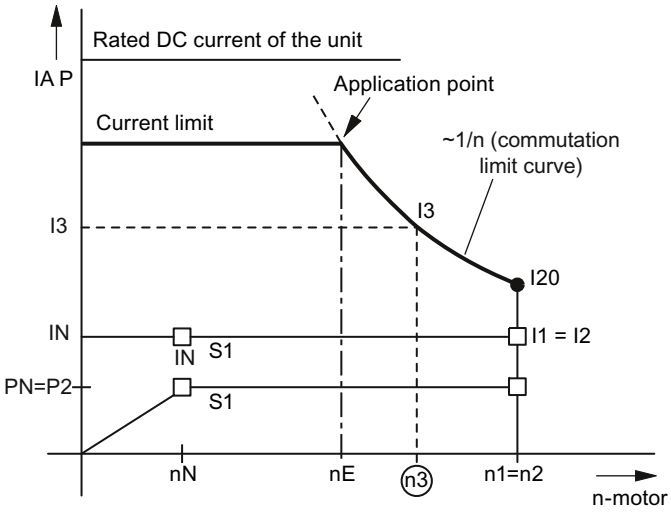

□	Motor rating plate data	(n3)	Maximum operating speed
●	Permissible limit values	I20	1.2 x I2
nE	Point where the speed-dependent current limiting takes effect		

Figure 10-75 Setting speed-dependent current limiting for motors without a bend in the commutation characteristic

```
*     S  H  U  N  T  -MOT.        1GG5116-0FH40-6HU7-Z
                NRE                                    EN 60034
     V       n2 = n1    1/MIN                A              KW
  46-380              50-2300              36.0-37.5      0.265-12.0
    380              [6000]  REG.          [38.5] — I2 = I1   12.0
   ERR.                V     A          THYR.: B6C LV=   0MH 380V/ 50HZ
   SEP.              310   1.45            IP 23          IM B3
                      54   0.32                           I.CL.F
Z: A11  G18  K01  K20
  SEP.  VENTIL.
```

Figure 10-76 Example of a motor rating plate

10.23 Thyristor blocking voltage calculation

The SINAMICS DCM converter offers the possibility of continually determining the voltage available at each individual thyristor of the armature converter. The voltage is used to identify which armature thyristors are presently conducting and which are presently blocked.

This information is available via BICOs (see function diagram 6950).

This information is used for the following functions as input variable:

- Converter commutation fault detection and initiation of the CCP
  The thyristor that is relinquishing the current must assume the blocking voltage, otherwise, commutation was unsuccessful.
- Torque direction changeover (sequential logic module)
  Before a thyristor of the new torque direction is triggered, all thyristors associated with the old torque direction must be blocked. The condition is evaluated in addition to the Ia=0 message.

The voltage at the armature thyristors is determined from the following measured values:

- Two phase-to-phase line supply voltages (UV, VW)
- Voltage at a thyristor (for 4Q: Anti-parallel thyristor pair) (X13/X26)
- DC voltage (Va)

Selecting the thyristor blocking voltage calculation using p50166

This parameter is only evaluated once during power up, i.e. a change only takes effect after a restart or power up with saved parameters (p0976 = 11).

The thyristor blocking voltage calculation is only really required in just a few applications and requires approx. 5% processor utilization; this is the reason that it is deactivated in the factory setting.

p50166 = 0 Thyristor blocking voltage monitoring not active (factory setting)
= 1 Thyristor blocking voltage monitoring active

Activation is recommended if a motor is not connected to the armature converter, but rather a very large inductance.

Note

The thyristor blocking voltage calculation function is available as product version 5 of the "Voltage measurement" module. You can find this information on the bar code label of the module.

Note

The thyristor blocking voltage calculation only functions for the armature voltage measurement via the "Voltage measurement" module.
If the thyristor blocking voltage calculation is activated with p50166 = 1 when the hardware version of the power interface is not suitable, fault message F60058 with fault value r0949[0] = 6 appears after the next power-up with the saved parameters.

10.24 Automatic restart

"Automatic restart" means:
For brief line supply disturbances (e.g. line supply dips), SINAMICS DCM does not immediately go into the "FAULT" operating state, but inhibits the armature firing pulses, and once the line supply returns, automatically enables them again.

"Brief" refers to a time that is: shorter than the time set at p50086 (= hot restart time)

During the brief pulse inhibit period, which is initiated when faults occur in the line supply, the SINAMICS DCM waits in operating state o4.0 (for line system faults in the armature circuit) or o5.1 (for line system faults in the field circuit).

If the network does not return to normal during the hot restart time, the relevant fault is triggered as soon as it elapses.

The following faults relate to the "Automatic restart" function:

F60004	Armature circuit phase failure (1U1, 1V1, 1W1)
F60005	Field circuit phase failure (3U1, 3W1)
F60006	Undervoltage (armature circuit or field circuit)
F60007	Overvoltage (armature current or field current)
F60008	Line frequency too low (armature current or field current)
F60009	Line frequency too high (armature current or field current)

Note

There is no automatic restart when the electronics power supply fails.

10.25 Operation on a single-phase line supply

SINAMICS DCM converters can also be operated on single-phase line supplies.

Fields of application for this operating mode include:

- Replacement of older single-phase converters employing analog technology
- Plants and systems where there is no 3-phase line supply
- Presenting and demonstrating SINAMICS DCM in seminar hotels and demonstration rooms where generally there is no three-phase line supply

Note

For single-phase operation, dynamic overload of the devices is not possible. The I^2t monitoring must be deactivated (p50075=0). If the I^2t monitoring is activated, for single-phase operation, fault 60058 is output with fault value 4.

Connection

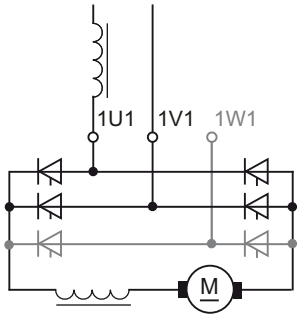

Figure 10-77 Connection to a single-phase line supply

The converter is connected to the line supply (one phase and the neutral conductor, e.g. 230 V or two phase conductors of a three-phase line supply, e.g. 400 V) via terminals 1U1 and 1V1. Connection 1W1 remains free.

It is mandatory that a single-phase line reactor or a transformer with 4% u_k is provided, which only supplies the DC converter involved.

Commutating reactor and transformer should be selected according to the rated motor current of the armature circuit.

In this B2 circuit, the line current is equal to the DC current in the armature circuit. All of the other line-side drive components should be dimensioned according to this. Further, due to the higher current ripple when compared to six-pulse operation, a smoothing reactor must be provided in the DC circuit. Please contact the motor manufacturer when dimensioning the smoothing reactor.

Parameterization

Selecting operation on a single-phase line supply with **p51799 = 1**

The high current ripple in this mode causes ripple in the actual speed. For smooth speed control, it is recommended to set the actual speed smoothing to approx. 10 ms (p50200 = 10 ms)

Derating

When selecting operation on a single-phase line supply, the rated DC current (r50072[1]) is automatically reduced to 67% of the value for 3-phase operation. The reason for this is the uneven distribution of the current in the thyristors in the power unit of the drive converter.

As a consequence, the rated output voltage is also reduced. See also Chapter "Technical data (Page 43)".

10.26 Connecting units in parallel and in series

Topology overview

Several SINAMICS DCM converters can be arranged in various topologies. The following topologies are supported:

- **6-pulse parallel connection**
  This topology is used in order to realize converter power ratings that are above the highest available SINAMICS DCM rating.
- **12-pulse parallel connection**
  This topology is especially used at higher power ratings to achieve lower line harmonics. In addition, by using this circuit, a lower DC current ripple is obtained when compared to a 6-pulse connection. One or several 6-pulse converters can be connected in parallel to each of the two 12-pulse converters connected in parallel.
- **6-pulse series connection**
  This topology is used to achieve a higher no-load DC voltage.
  The following versions are available:
  - Both converters are operated with the same firing angle.
  - Sequence control (one of the two converters is always at a control limit, the other converter controls the armature current)
  - Series connection of a controlled converter with an uncontrolled converter (thyristor bridge B6 + diode rectifier)

  One or several converters can be connected in parallel to each of the converters connected in series to increase the power rating.
- **12-pulse series connection**
  The topology corresponds to a 6-pulse series connection. In addition, a lower DC current ripple is obtained when compared to a 6-pulse connection. One or several converters can be connected in parallel to each of the converters connected in series to increase the power rating.

Note

- All of the topologies listed here are only permissible in the restricted line frequency range from 20 Hz to 65 Hz.
- For all of the topologies listed here, only power units with the same rated DC current, the same commutating reactors, and the same wiring/busbars may be used!
- For all of the topologies listed here, only units with the same firmware version may be used.

Note

More information about design is given in the associated application notes (see link "Preface (Page 3)").

Communication

Note

Before activating the parallel interface (i.e. before setting p51800 > 0), a unique station address must be set at p51806 on all SINAMICS DCMs. Otherwise, the parallel interface will not work property.

Remedy in this case: Switch the electronics power supply off and then on.

- In the particular topology, communication between all converters is established via the parallel interface. The CUDs of all converters should be connected with one another.
- The parallel interface allows a maximum of 16 nodes to communicate.
- The devices are connected using 8-core shielded patch cables, type UTP CAT5 according to ANSI/EIA/TIA 568, such as those that are used to network PCs. A standard 5 m long cable can be directly purchased from Siemens (article number: 6RY1707-0AA08). (n-1) cables are required to connect n devices. The bus termination must be activated at the units connected at the start of the bus and at the end of the bus (p51805 = 1).

  Note

  A patch cable according to TIA568A (European) or TIA568B (American) can be used. However, both cable ends must be wired according to the same standard (patch cable = 1:1). A crossover cable is **not** suitable.

- The parallel interface also enables any BICOs (that can be parameterized by the user) to be exchanged between nodes. See function block diagrams 9352 and 9355. Exchanging data in this way is not required for closed-loop control of the firing pulses or for generating them, and is available for the user for any purpose.

  Note

  For a 12-pulse series connection, it is not permissible that the parallel interface is used to transfer BICOs, i.e. p51801 = 0 must be set. Failure to comply with this remark can result in sporadic current peaks.

- For additional details on how devices are connected in parallel, please refer to function diagrams 9350, 9352, and 9355.

Control system

- For all of the topologies, a SINAMICS DCM is used as the master converter. The other converters are called follower converters.
- The control commands - switch-on/stop, operating enable, quick stop, etc. are fed to the master converter for all topologies.
  At the follower converters, terminals 12 and 13 must be permanently connected to terminal 9. If, in spite of this, a control command is entered at a follower converter, then it has the following consequences:

OFF1	Has no effect, as long as n<nmin has not been reached, then the current is reduced to zero at the follower and the follower goes into operating state o7.0 or o7.1

OFF2	The current is reduced to zero at the follower, then the follower goes into operating state o10.1 or o10.2
OFF3	no effect, as long as n<nmin has not been reached, then the current is reduced to zero at the follower and the follower goes into operating state o9.1 or 9.2
E-STOP	The current is reduced to zero at the follower, then the follower goes into operating state o10.3
Operating enable	The current is reduced to zero at the follower, then the follower goes into operating state o1.1 or o1.

As long as the master does not receive a switch-on command, the slaves stay in operating state o10.0 (wait for switch-on from the master).

If the master receives a switch-on command, then it automatically transfers this to the slaves. Then, all devices carry out their switch-on sequence, i.e. they attempt to go into operating state o0. However, the master waits in operating state o1.7 until all slaves have reached operating state o0 (exception: n+m operation for a 6-pulse parallel connection)

If a follower leaves operating state o0, then the master outputs fault message F60044 (exception: n+m operation for a 6-pulse parallel connection)

- The speed setpoint and the actual speed value should be entered at the master converter.
- The optimization runs should be started at the master converter. The follower converters must be connected and ready for operation at this point.

Miscellaneous

Note

For a follower converter the i^2t monitoring of the motor should be deactivated (p50114 = 0), because for a non-symmetrical current, this would then respond at the follower.

10.26.1 6-pulse parallel connection

10.26.1.1 Basic topology

The topology of a 6-pulse parallel connection, comprising a master converter and two slave converters is shown in the following diagram.

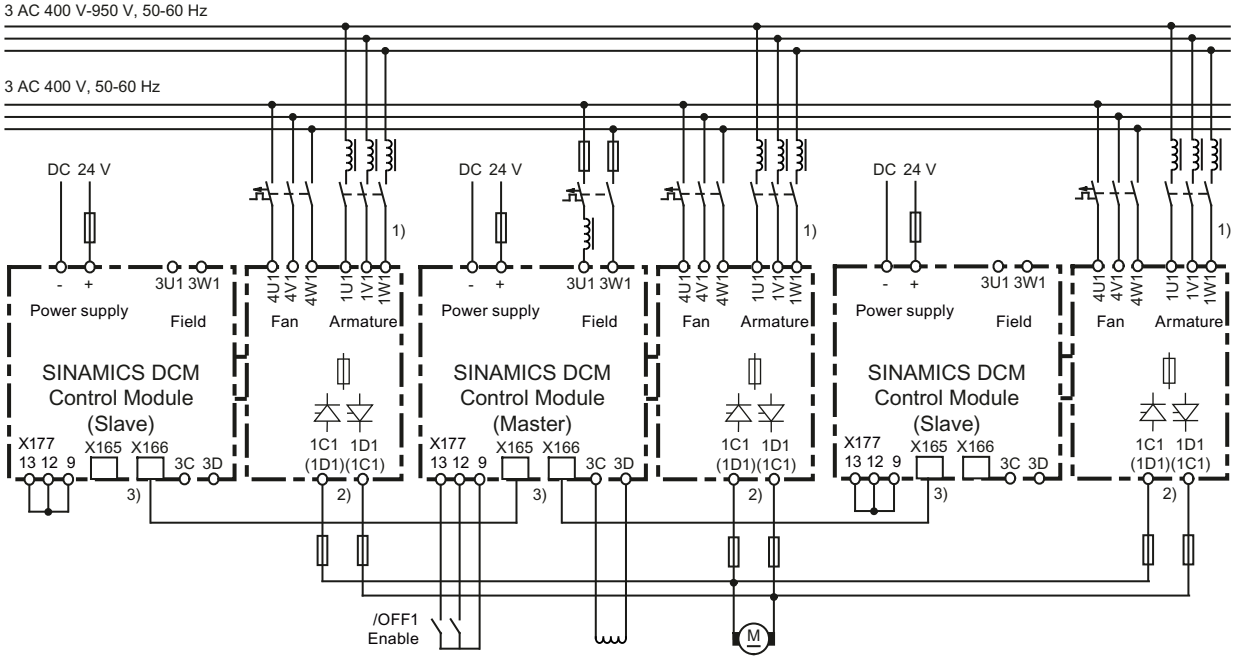

1) The same phase sequence is required between 1U1/1V1/1W1.

2) The same phase sequence is required between 1C1/1D1.

3) The devices are connected using (8-pin) shielded patch cables of type UTP CAT5 in acc. with ANSI/EIA/TIA 568, such as those that are used in PC network technology.
A standard, 5 m cable can be obtained directly from Siemens (article number: 6RY1707-0AA08).
(n-1) cables are required for connecting n devices in parallel.
The bus terminator must be activated for each device positioned at the start or end of the bus (p51805 = 1).

Figure 10-78 Parallel connection

- Up to six devices can be connected in parallel.
- When connecting several devices in parallel, the master device should be positioned centrally due to the signal runtimes. Maximum cable length of the parallel-connection interface cable between master and slave devices at each bus end: 15 m.
- Separate line reactors of the same type are required for each power unit for current splitting purposes. The difference in reactor tolerances determines the current splitting. For operation without derating (current reduction), a tolerance of 5% or less is recommended.

10.26.1.2 Extended topology

The topology of a 6-pulse parallel connection, comprising a master converter, one substitute master, two follower converters, as well as an independent converter is shown in the following diagram.

The converters SINAMICS DCM 1, DCM 2, DCM 3 and DCM 4 are operated in the n+m operating mode. The SINAMICS DCM 5 converter is, regarding its power unit, independent of the others. It only exchanges BICOs with them via the parallel interface.

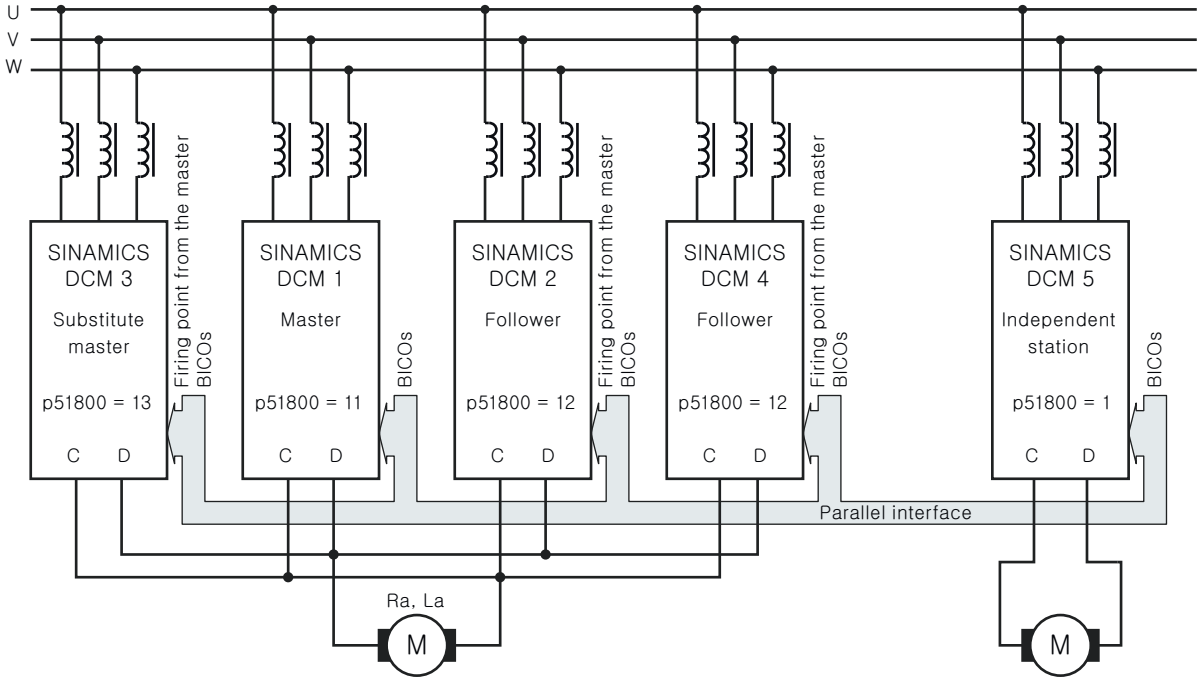

Figure 10-79 6-pulse parallel connection, extended topology

10.26.1.3 Operating modes

There are two operating modes:

- Standard mode
- n+m operation (also known as redundancy mode or redundant operation)

Standard mode

A SINAMICS DCM is defined as the master. This device carries out the closed-loop speed control, the closed-loop armature current control, line synchronization and determines the firing points. The firing points and the thyristor pair to be fired are transferred to the follower devices; all the followers then fire the thyristor pairs at these points.

n+m mode

n+m converters are connected in parallel. When up to m converters fail (e.g. a fuse ruptures in the power unit, a fault message occurs), operation is maintained without any interruption.

For n+m operation, a SINAMICS DCM is defined as master. Additional SINAMICS DCM are defined as substitute masters. As with the standard mode, the device defined as the master carries out the closed-loop speed control, the closed-loop armature current control, line synchronization and determines the firing points.

If a follower fails (due to a fuse blowing in the power unit or a fault being output, for example), operation continues with the remaining converters. The SINAMICS DCMs that are still in proper working order continue to operate uninterrupted.

If a master fails (due to a fuse blowing in the power unit or a fault being output, for example) a substitute master automatically becomes the master and the remaining devices continue to operate uninterrupted. If several SINAMICS DCMs are parameterized as substitute masters, the substitute master with the lowest bus address (p51806) that is ready for operation takes over.
Parameter r53311.0 indicates whether the SINAMICS DCM is currently operating as master (see FP9350).

When configuring, it is important to note that the power produced by n devices alone (rather than n+m devices) must also be sufficient for the application in question.

When operating the SINAMICS DCM together with a SIMOREG DC-MASTER Converter Commutation Protector (CCP), n+m operation must be deactivated.

Optimization runs:
n+m operation must be deactivated before starting the optimization runs. P51803 must be set = 0 at the master and at the substitute master units.
Otherwise, during the optimization runs, monitoring functions can inadvertently respond (e.g. for p51803 = 2, fault message F60105 with fault value 1 can be output).

Versions of the n+m operating mode:

1. **n+m mode only in the armature circuit**
   In this operating mode, when the master fails, only the armature firing pulses and the upstream closed-loop control (setpoint channel, speed control, armature current control) are transferred to the substitute master; however, not the field firing pulses and the upstream control (EMF control, field current control).
   The main application for the operating mode is to supply large inductances (e.g. field windings of synchronous generators) with the SINAMICS DCM armature converter.
   Activation:
   At the master and substitute master devices, set p51803=1.
2. **n+m mode in the armature circuit and in the field circuit**
   In this operating mode, when the master fails the following values are forwarded to the substitute master:
   - the armature firing pulses and the upstream control (setpoint channel, speed control, armature current control)
   - the field firing pulses and the upstream control (EMF control, field current control)

   Activation:
   On the master and substitute master devices, set p51803 = 2.
   Connection:
   Outputs 3C and 3D (field DC voltage output) of the master and all substitute masters must be connected to the motor field winding in parallel.

Remarks on n+n mode:

- When commissioning, after carrying out the optimization (by starting optimization runs, for example), all parameters set by the optimization runs must be transferred to all substitute masters according to Chapter "Parameterization (Page 579)"
- Since the field supplies are connected in parallel, part of the overall motor-field current flows through the freewheeling arm of the respective field power units with disabled field firing pulses. To sense the total motor field current (indicated at parameter r50035), in the actual master, the free-wheeling current detected by the "partner" device is therefore automatically added.
  Therefore, for this operating mode, there must be an intact parallel connection as well as an intact electronic power supply of the master and the substitute master – these are prerequisites.
  If this operating mode is also to be used after the electronics power supply of the master or the substitute master fails, then the total motor actual field current value must be externally sensed. The value must be supplied to the master and substitute master using p50612.
- Generally speaking, the master function is only transferred from the active master to the substitute master via telegram and a sound parallel-connection interface. Even if the master's electronic power supply fails, the master still has enough time to transmit a telegram for the purpose of transferring the master function.
- As soon as the parallel connection is interrupted (by disconnecting the parallel connecting cable), it can no longer be guaranteed that the master/follower assignment will be correct. The electronic power supply must be switched off and back on again at all devices!

Note

The control commands - switch-on/stop, operating enable, quick stop, etc. - must also be entered at all of the substitute master devices.

The speed setpoint and the actual speed value must be entered at all substitute master devices.

If the thermal overload protection of the DC motor (I2t motor monitoring) is used, as explained in Chapter "Thermal overload protection for the DC motor (I2t monitoring of the motor) (Page 562)", the following should be observed:
After a device fails, the calculated motor temperature of this device deviates from the devices still operational. In this particular case, thermal overload protection as described in Chapter "Thermal overload protection for the DC motor (I2t monitoring of the motor) (Page 562)" no longer applies.

10.26.1.4 Parameterization

6-pulse parallel connection, standard operation

Table 10-90 Standard mode

Parameter		Master	Follower or parallel units
p51799	Operating principle	0	The same as at the master
p51800	Position in the topology	11 (Master)	12 (Follower)
p51801	Number of send data	Any	Any

Parameter		Master	Follower or parallel units
p51802	Minimum number of nodes	Number of SINAMICS DCM units in this topology	Number of SINAMICS DCM units in this topology
p51803	n+m mode	0	0
p51804[..]	Send data	Any	Any
p51805	Bus terminator	0 or 1 [1]	0 or 1 [1]
p51806	Station address	Unique address	Unique address
p51807	Telegram failure time	0.1 s	0.1 s
p51815	Paralleling interface number of nodes	Number of all DCM connected to the paralleling interface	The same as at the master
p50082	Field operating mode	≠ 0	0 (no field)
p50076[..]	Reduction in rated unit DC current	-	The same as at the master
p50078[..]	Rated value for supply voltage	-	The same as at the master
p50100	Rated motor current	Rated motor current/number of SINAMICS DCM	The same as at the master
p50110	Armature resistance Ra [2]	Actual armature resistance × number of SINAMICS DCM	The same as at the master
p50111	Armature inductance La [2]	Actual armature inductance × number of SINAMICS DCM	The same as at the master
p50114	Motor thermal time constant	Motor thermal time constant in s	The same as at the master
p50140	Motor I2t monitoring, response when starting	Application-specific	The same as at the master
p51591	La reduction factor [2]	-	The same as at the master
p50357	Threshold for interrupted tachometer	Application-specific	100% (tachometer interruption monitoring not active)

[1] = 1 at the two outermost units (= at the physical ends of the bus line)
= 0 on all of the other units

[2] The optimization run for current controller and precontrol (p50051 = 23 or 25) sets the correct values for these parameters.

6-pulse parallel connection n+m operation

Table 10-91 n+m mode

Parameter		Master	Substitute master	Follower
p51799	Operating principle	0	The same as at the master	The same as at the master
p51800	Position in the topology	11 (Master)	13 (Substitute master)	12 (Follower)
p51801	Number of send data	Any	Any	Any
p51802	Minimum number of nodes	n	The same as at the master	The same as at the master
p51812	Total number of nodes	n+m	The same as at the master	The same as at the master
p51803	n+m mode	1 (only armature) 2 (armature + field)	The same as at the master	0
p51804[..]	Send data	Any	Any	Any
p51805	Bus terminator	0 or 1 [1]	0 or 1 [1]	0 or 1 [1]
p51806	Station address	Unique address	Unique address	Unique address
p51807	Telegram failure time	0.1 s	0.1 s	0.1 s

Parameter		Master	Substitute master	Follower
p51815	Paralleling interface number of nodes	Number of all DCM connected to the paralleling interface	The same as at the master	The same as at the master
p50082	Field operating mode	≠ 0	0 (if only armature) ≠ 0 (if armature + field)	0 (no field)
p50076[..]	Reduction in rated unit DC current	-	The same as at the master	The same as at the master
p50078[..]	Rated value for supply voltage	-	The same as at the master	The same as at the master
p50100	Rated motor current	Rated motor current/ number of SINAMICS DCM	The same as at the master	The same as at the master
p50110	Armature resistance Ra [2)]	Actual armature resistance × number of SINAMICS DCM	The same as at the master	The same as at the master
p50111	Armature inductance La [2)]	Actual armature inductance × number of SINAMICS DCM	The same as at the master	The same as at the master
p50114	Motor thermal time constant	Motor thermal time constant in s	The same as at the master	The same as at the master
p50140	Motor I2t monitoring, response when starting	Application-specific	The same as at the master	The same as at the master
p50115 to p50139	Field characteristic	-	The same as at the master (only if n+ m operation for armature + field)	The same as at the master
p51591	La reduction factor [2)]	-	The same as at the master	The same as at the master
p50357	Threshold for interrupted tachometer	Application-specific	The same as at the master	100% (tachometer interruption monitoring not active)

[1)] = 1 at the two outermost units (= at the physical ends of the bus line)
= 0 on all of the other units

[2)] The optimization run for current controller and precontrol (p50051 = 23 or 25) sets the correct values for these parameters.

10.26.2 12-pulse parallel connection

Note

12-pulse applications

The circuit diagrams in this chapter are block diagrams.

You can find detailed information on interconnecting, dimensioning and parameterizing in the application document "12-pulse applications (https://support.industry.siemens.com/cs/ww/en/view/109822407)".

Support is also available through our Technical Support organization (for contact address, see "Preface (Page 3)").

Topology

The following diagram shows the topology of a 12-pulse parallel connection.

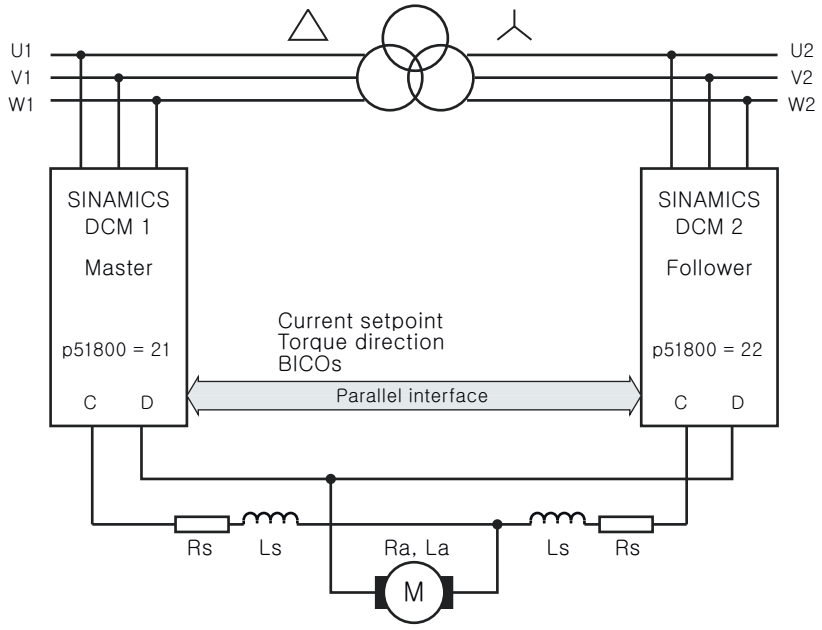

Figure 10-80 12-pulse parallel connection (1), block diagram

The following diagram shows the topology of a 12-pulse parallel connection, where an additional 6-pulse converter is connected in parallel to each of the two 12-pulse converters connected in parallel.

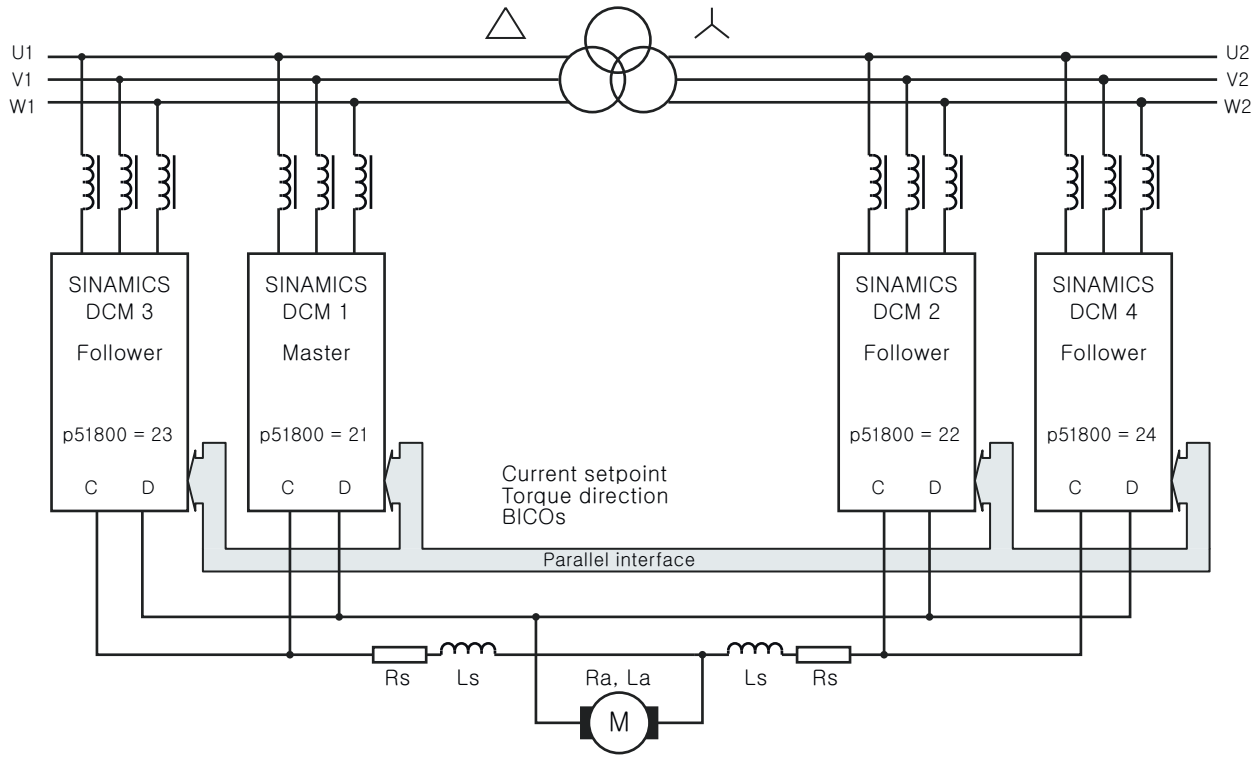

Figure 10-81 12-pulse parallel connection (2), block diagram

Note

If additional converters are connected in parallel to the master converter, then exactly the same number of converters must also be connected in parallel with the follower converter.

10.26.3 6-pulse series connection

Topology

The following diagram shows the topology of a 6-pulse series connection of two SINAMICS DCM.

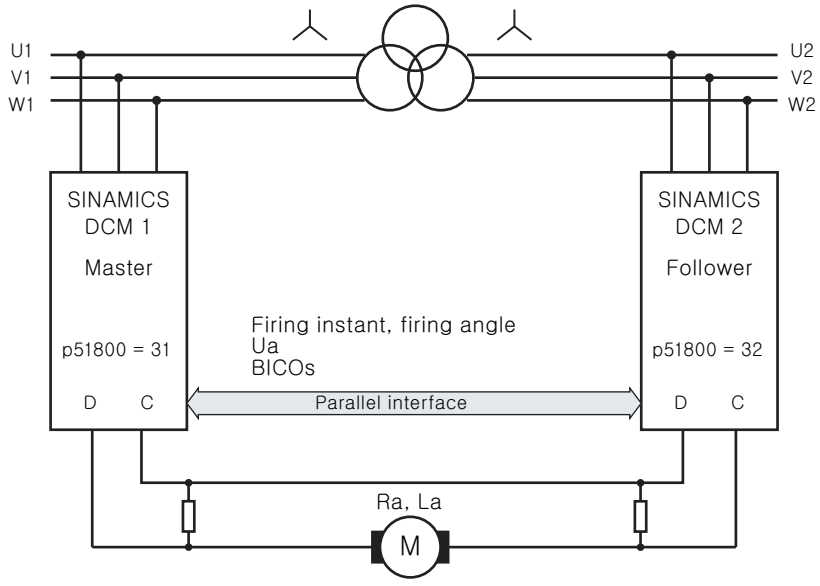

Figure 10-82 6-pulse series connection (1)

The following diagram shows the topology of a 6-pulse series connection, where additional converters are connected in parallel to each of the two 6-pulse converters connected in series.

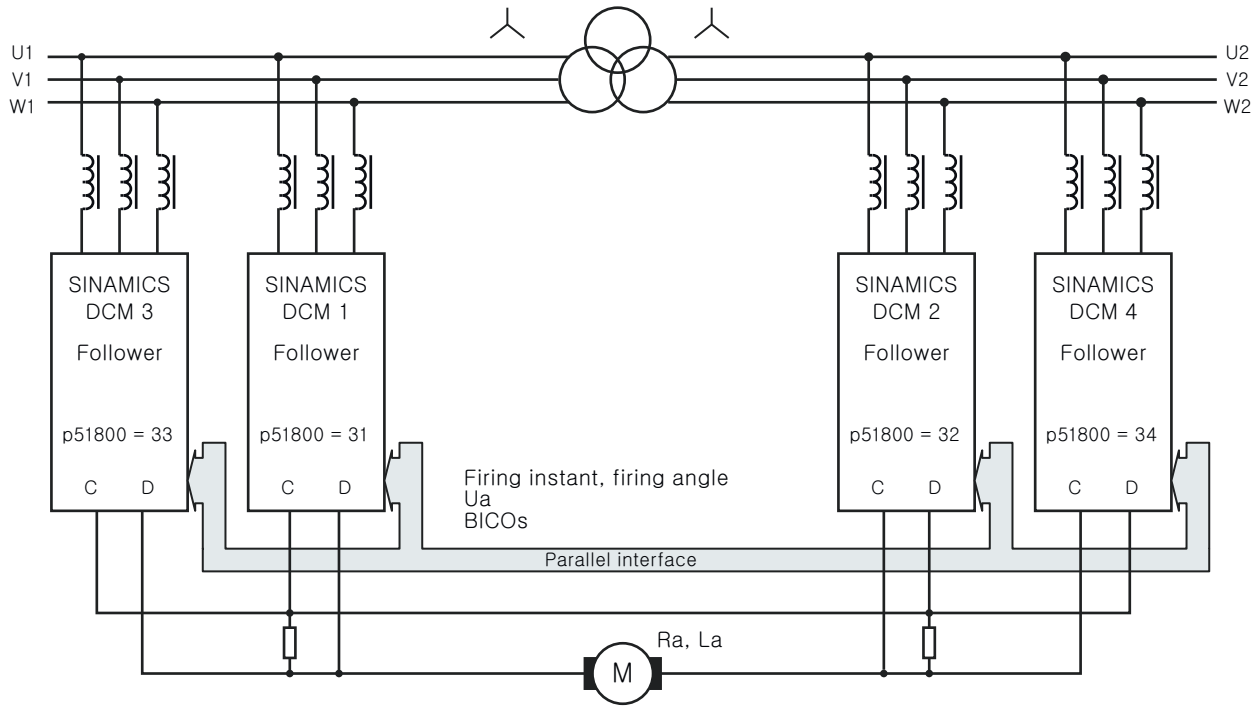

Figure 10-83 6-pulse series connection (2)

The instructions for dimensioning the balancing resistors can be found in an FAQ (for the link, see the Preface).

Operating modes

There are 2 operating modes:

- **Operation with the same firing pulses (p51799 = 0 or p51799 = 31):**
  Both partial converters are fired at precisely the same point. The master calculates the firing point and this is transferred to the follower via the parallel interface. Synchronization to the line supply is exclusively performed by the master. The follower must be connected to the line supply with the same phase sequence as the master.
- **Operation with sequence control (p51799 = 32):**
  Both partial converters synchronize to the line supply and generate their own firing points. The firing angle for the master and the firing angle for the follower are calculated by the master and the firing angle and the torque direction for the follower are transferred to the follower via the parallel interface. The firing angle for the master and follower are generated so that the reactive power load of the line supply is as low as possible. This is the case if one of the two partial converters is at a control limit and the other carries-out the closed-loop control. This type of closed-loop control is only possible for continuous current. Operation with the same firing points is automatically selected in the discontinuous (pulsating) current range.

Note

The phase sequence at the master and the follower must be the same.

Parameter assignment

The following parameters should be specifically set for operation with this converter topology:

Table 10-92 Parameter assignment, 6-pulse series connection

Parameter		Master	Follower or parallel units
p51799	Operating principle	0, 31 or 32	The same as at the master
p51800	Position in the topology	31 (Master)	32 (follower) 33 (parallel to the master) 34 (parallel to the follower)
p51801	Number of send data	Any	Any
p51802	Minimum number of nodes	Number of SINAMICS DCM units in this topology	Number of SINAMICS DCM units in this topology
p51803	n+m mode	0	0
p51804[..]	Send data	Any	Any
p51805	Bus terminator	0 or 1 [1]	0 or 1 [1]
p51806	Station address	Unique address	Unique address
p51807	Telegram failure time	0.1 s	0.1 s
p51815	Paralleling interface number of nodes	Number of all DCM connected to the paralleling interface	The same as at the master
p50082	Field operating mode	≠ 0	0 (no field)
p50076[..]	Reduction in rated unit DC current	-	The same as at the master
p50078[..]	Rated value for supply voltage	-	The same as at the master
p50100	Rated motor current	-	The same as at the master
p50110	Armature resistance Ra [2]	-	The same as at the master
p50111	Armature inductance La [2]	-	The same as at the master
p50114	Motor thermal time constant	Motor thermal time constant in s	The same as at the master
p50140	Motor I2t monitoring, response when starting	Application-specific	The same as at the master
p51591	La reduction factor [2]	-	The same as at the master

[1] = 1 at the two outermost units (= at the physical ends of the bus line)
= 0 on all of the other units

[2] The optimization run for current controller and precontrol (p50051 = 23 or 25) sets the correct values for these parameters.

10.26.4 6-pulse series connection: controlled converter + uncontrolled converter

Topology

The following diagram shows the topology of a 6-pulse series connection of a SINAMICS DCM 2-quadrant unit and a diode rectifier (thyristor bridge B6 + diode rectifier).

Note

The AC input voltage of the controlled converter should be between 10 % and 15 % higher than that of the uncontrolled converter, so that the current can be reliably reduced down to 0.

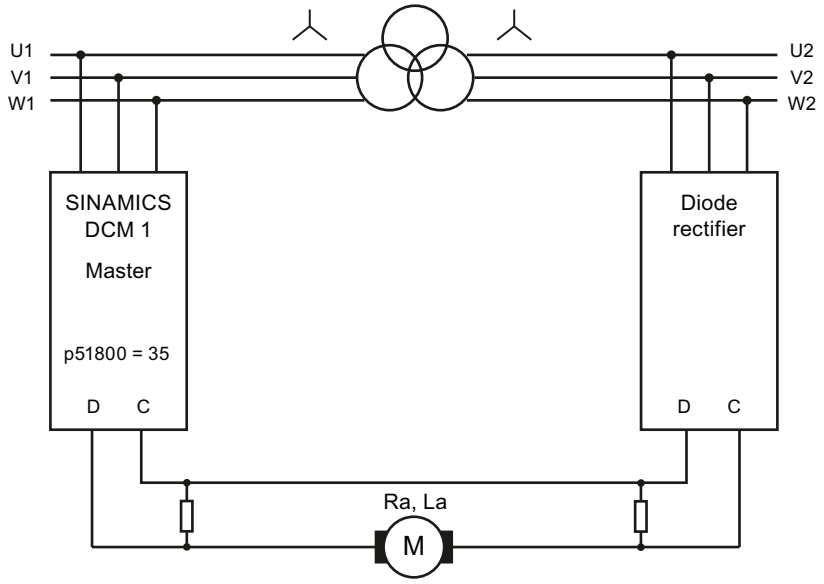

Figure 10-84 6-pulse series connection: controlled + uncontrolled rectifier

The instructions for dimensioning the balancing resistors can be found in an FAQ (for the link, see the Preface).

Parameterization

The following parameters should be specifically set for operation with this converter topology:

Table 10-93 Parameterization, 6-pulse series connection

Parameter		Master	Units connected in parallel with the master
p51798	Voltage at an uncontrolled rectifier	Actual voltage as a percentage of the voltage at the master (standard: 85 %)	The same as at the master
p51799	Operating principle	0	0
p51800	Position in the topology	35 (Master for diode rectifier)	33

Parameter		Master	Units connected in parallel with the master
p51802	Minimum number of nodes	Number of SINAMICS DCM units in this topology	Number of SINAMICS DCM units in this topology
p51807	Telegram failure time	0.0 s 0.1 s if units connected in parallel are available	0.1 s
p51815	Paralleling interface number of nodes	Number of all DCM connected to the paralleling interface	The same as at the master
p50082	Field operating mode	≠ 0	0 (no field)
p50076[..]	Reduction in rated unit DC current	-	The same as at the master
p50078[..]	Rated value for supply voltage	-	The same as at the master
p50100	Rated motor current	Rated motor current/number of SINAMICS DCM	The same as at the master
p50110	Armature resistance Ra [2)]	Actual armature resistance × number of SINAMICS DCM	The same as at the master
p50111	Armature inductance La [2)]	Actual armature inductance × number of SINAMICS DCM	The same as at the master
p51591	La reduction factor [2)]	-	The same as at the master

[2)] The optimization run for current controller and precontrol (p50051 = 23 or 25) sets the correct values for these parameters.

10.26.5 12-pulse series connection

Note

12-pulse applications

The circuit diagrams in this chapter are block diagrams.

You can find detailed information on interconnecting, dimensioning and parameterizing in the application document "12-pulse applications (https://support.industry.siemens.com/cs/ww/en/view/109822407)".

Support is also available through our Technical Support organization (for contact address, see "Preface (Page 3)").

Topology

The following diagram shows the topology of a 12-pulse series connection of two SINAMICS DCM.

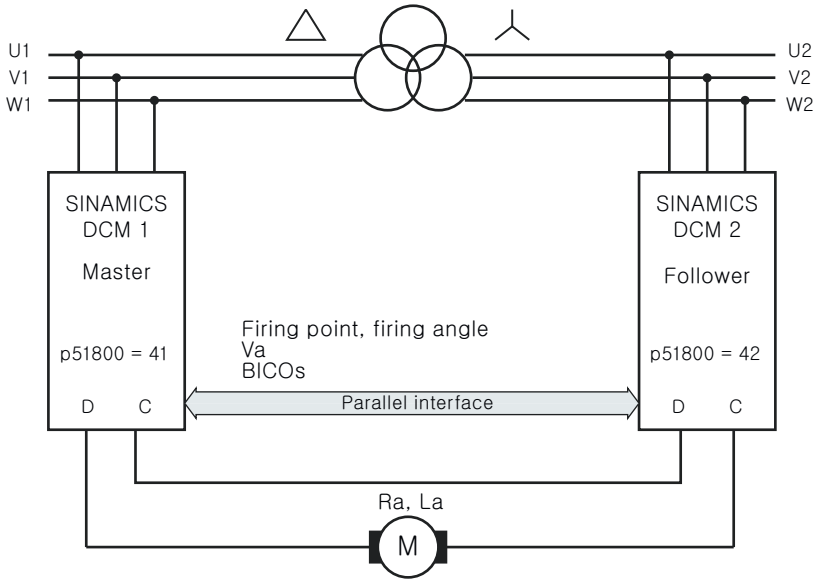

Figure 10-85 12-pulse series connection (1), block diagram

The following diagram shows the topology of a 12-pulse series connection, where additional converters are connected in parallel to each of the two 12-pulse converters connected in series.

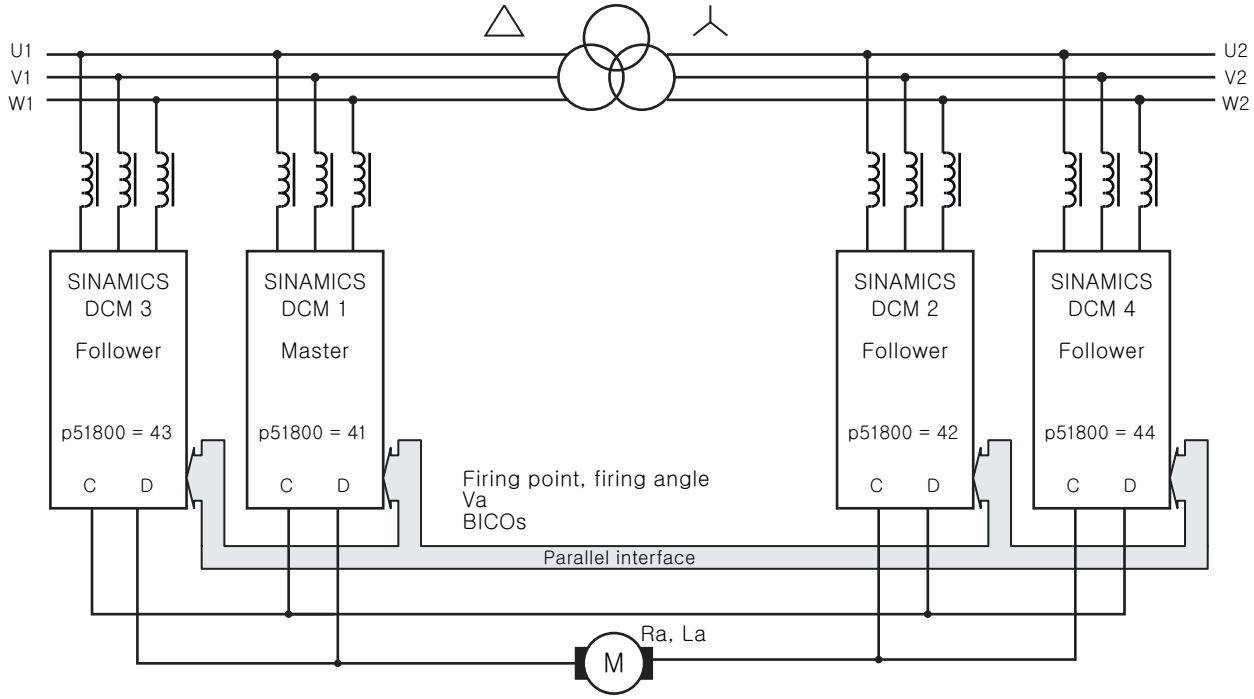

Figure 10-86 12-pulse series connection (2), block diagram

Operating modes

There are two operating modes:

- **Operation with the same firing times (p51799 = 41):**
  Both partial converters are fired at precisely the same instant. The master calculates the firing point and this is transferred to the follower via the parallel interface. Synchronization to the line supply is exclusively performed by the master. The follower must be connected to the line supply with the same phase sequence as the master.
- **Operation with sequence control (p51799 = 42):**
  Both partial converters synchronize to the line supply and generate their own firing points. The firing angle for the master and the firing angle for the follower are calculated by the master and the firing angle and the torque direction for the follower are transferred to the follower via the parallel interface. The firing angle for the master and follower are generated so that the reactive power load of the line supply is as low as possible. This is the case if one of the two partial converters is at a control limit and the other carries-out the closed-loop control. This type of closed-loop control is only possible for continuous current. Operation with the same firing points is automatically selected in the discontinuous (pulsating) current range.

Note

The current ripple is significantly higher when the two partial converters operate with sequence control than when they operate with the same firing times. In this case, the current ripple approximately corresponds to that for 6-pulse operation. Especially in older motors, under certain circumstances this ripple can cause problems (for example, during commutation).

Therefore, a conscious decision must be made:

- Low ripple, but no reduction of the reactive power:
  → operation with the same firing times (p51799 = 41)
- Low reactive power, but no reduction of the ripple:
  → Operation with sequence control (p51799 = 42)

Note

Connecting the follower converter to the 12-pulse transformer

The power unit of the follower converter must be connected to the 12-pulse transformer so that its phases lag the phases of the line supply at the master by 30°. The phase sequence must be the same.

10.26.6 12-pulse series connection: controlled converter + uncontrolled converter

Note

12-pulse applications

The circuit diagrams in this chapter are block diagrams.

You can find detailed information on interconnecting, dimensioning and parameterizing in the application document "12-pulse applications (https://support.industry.siemens.com/cs/ww/en/view/109822407)".

Support is also available through our Technical Support organization (for contact address, see "Preface (Page 3)").

Topology

The following diagram shows the topology of a 12-pulse series connection of a SINAMICS DCM 2-quadrant unit and a diode rectifier (thyristor bridge B6 + diode rectifier).

Note

The AC input voltage of the controlled converter should be between 10 % and 15 % higher than that of the uncontrolled converter, so that the current can be reliably reduced down to 0.

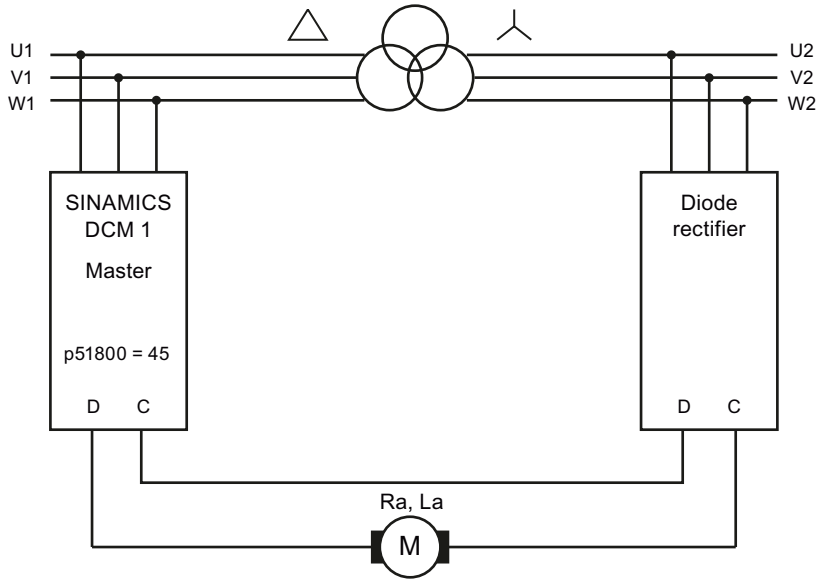

Figure 10-87 12-pulse series connection: Controlled + uncontrolled rectifier, block diagram

10.26.7 Switchover of the power unit topology - option S50

Ordering information for option S50, see Chapter "Ordering information (Page 31)"

Note

SINAMICS DCM can only be retrofitted with option S50 in the manufacturers factory.

Note

You can find detailed information on interconnecting, dimensioning and parameterizing in the application document "12-pulse applications". Support is also available through our Technical Support organization (for contact address, see "Preface (Page 3)").

In certain applications, it is necessary to switch between a 12-pulse parallel connection and a 12-pulse series connection during operation using a control command.

External contactors must be used to switch over the power unit topology. Option S50 provides the required firmware functionality.

Requirements for using this functionality

- All SINAMICS DCMs involved must be equipped with option S50.
- It is not permissible that the "n+m" mode is used.
- The function of the "parallel switching master" must remain on the same SINAMICS DCM in both power unit topologies.

10.27 Field reversal

See also the SINAMICS DCM List Manual, function diagram 6920

When using a two-quadrant unit (with only one armature current flow direction) by reversing the current in the excitation winding of the DC motor (field reversal) operation in additional quadrants of the speed-torque characteristic is possible (direction of rotation reversal and braking).

Two contactors are required in the field circuit to reverse the field voltage.
The functions "Direction of rotation reversal using field reversal" and "Braking using field reversal" control connector outputs r53195[0] (close field contactor 1) and r53195[1] (close field contactor 2), which are then used to control the two field contactors.

A protection circuit is required in the field circuit.

r53195[0]	= 0	No contactor control
	= 1	Control for a contactor to switch-in the positive field direction
r53195[1]	= 0	No contactor control
	= 1	Control for a contactor to switch-in the negative field direction

10.27.1 Direction of rotation reversal using field reversal

The function "Direction of rotation reversal using field reversal" is controlled using the signal source (binector) selected at binector input p50580 and this has a switch-type function. It defines the field direction and therefore also the direction of rotation for a positive speed setpoint.

Binector = 0	A positive field direction is selected. "Close field contactor 1" (r53195.0) = 1, "Close field contactor 2" (r53195.1) = 0
Binector = 1	A negative field direction is selected. "Close field contactor 1" (r53195.0) = 0, "Close field contactor 2" (r53195.1) = 1

Changing the logical level of the binector controlling the function "Direction of rotation reversal using field reversal " brakes the drive and accelerates it in the opposite direction of rotation.

Field reversal is completely executed. Level changes at the connector input have no effect while the field is being reversed.

Note

Only positive speed setpoints make sense.

Control sequence when specifying "Direction of rotation using field reversal"

1. Drive rotates in direction of rotation 1 or 2 (or is at a standstill)
2. Specify "Direction of rotation reversal using field reversal" by changing the logical state of the binector selected using p50580

3. Field reversal is executed
   Precondition: No braking was initiated using the key function "Braking using field reversal"
   - Wait until armature current $I_A = 0$, then armature pulse inhibit (the drive then remains in operating state ≥ o1.4)
   - Inhibit field firing pulses (r52268=0 also initiates this)
   - Wait until I_{field} (r52265) < $I_{field\ min}$ (p50394)
   - Wait time according to p50092[00] (0.0 to 10.0 s, factory setting 3.0 s)
   - Open current field contactor (r53195.0 = 0 or r53195.1 = 0)
   - Wait time according to p50092[01] (0.0 to 10.0 s, factory setting 0.2 s)
   - Control new field contactor (r53195.0 = 1 or r53195.1 = 1)
   - Reverse the speed actual value (with the exception, for p50083 = 3 ... EMF as speed actual value)
   - Wait time according to p50092[02] (0.0 to 10.0 s, factory setting 0.1 s)
   - Enable field firing pulses
   - Wait until I_{field} (r52265) > $I_{field\ set}$ (r52268) * p50398
   - Wait time according to p50092[03] (0.0 to 10.0 s, factory setting 3.0 s)
   - Enable armature firing pulses (operating state o1.4 can be exited)
4. Drive brakes and then rotates in direction of rotation 1 or 2 (or is at a standstill)

Note

In the case of an internal speed actual value reversal as a result of field reversal, p50083 is supplied with inverted signal values (exception: p50083 = 3, see the SINAMICS DCM List Manual, function diagram 6810).

When using the ramp-function generator, it is recommended to parameterize p50228 = 0 (no speed controller setpoint filtering). If this is not done, then initial braking can occur at the current limit as a result of the speed actual value reversal and setting the ramp-function generator output to the (reversed) speed actual value or to the value according to p50639 in operating state o1.4.

10.27.2 Braking using field reversal

The function "Braking using field reversal" is controlled using the signal source (binector) set at binector input p50581 and this has a key-type function.

Binector = 1 (for ≥30 ms) in operating state ≤o5 (line contactor closed) causes the drive to brake to $n < n_{min}$.
After this, the original field direction is selected.
The motor can run-up in the original direction of rotation after the braking command has been withdrawn (binector = 0) and acknowledged using "Stop" and "Switch-on".

Control sequence when specifying "Braking using field reversal"

1. Drive rotates with direction of rotation 1 or 2
2. Specify "Braking using field reversal" using a logical 1 (for ≥30 ms) selected at binector using p50581
3. Field reversal is executed.
   Preconditions: Line contactor is closed (for operating state ≤o5) and the drive is not already braking.
   Braking is identified by the negative internal actual speed (whereby, this is obtained in the negative field direction by reversing the real actual speed):
   - Wait until armature current $I_A = 0$, then armature pulse inhibit (the drive then remains in operating state ≥ o1.4)
   - Inhibit field firing pulses (r52268 = 0 also initiates this)
   - Wait until I_{field} (r52265) < $I_{field\ min}$ (p50394)
   - Wait time according to p50092[00] (0.0 to 10.0 s, factory setting 3.0 s)
   - Open current field contactor (r53195.0 = 0 or r53195.1 = 0)
   - Wait time according to p50092[01] (0.0 to 10.0 s, factory setting 0.2 s)
   - Control new field contactor (r53195.1 = 1 or r53195.1 = 1)
   - Reverse the speed actual value (with the exception, for p50083 = 3 ... EMF as speed actual value)
   - Wait time according to p50092[02] (0.0 to 10.0 s, factory setting 0.1 s)
   - Enable field firing pulses
   - Wait until I_{field} (r52265) > $I_{field\ set}$ (r52268) × p50398
   - Wait time according to p50092[03] (0.0 to 10.0 s, factory setting 3.0 s)
   - Enable armature firing pulses (operating state o1.4 can be exited)
4. Sequence when braking the drive:
   - $n_{set} = 0$ internally entered at the ramp-function generator input, the drive brakes
   - Wait until $n < n_{min}$ (p50370)
   - Wait until armature current $I_A = 0$, then armature pulse inhibit (drive goes into operating state o7.2)
   - Wait until the braking command has been withdrawn by logical 0, on the binector selected with p50581
     (as long as level = 1 is present, the drive is kept in operating state o7.2)

5. Sequence to change over to the original field direction
   Precondition: The present field direction does not match the field direction requested using the function "Direction of rotation reversal using field reversal"
   - Wait until armature current $I_A = 0$, then armature pulse inhibit (the drive then remains in operating state ≥ o1.4)
   - Inhibit field firing pulses (r52268 = 0 also initiates this)
   - Wait until I_{field} (r52265) < $I_{field\ min}$ (p50394)
   - Wait time according to p50092[00] (0.0 to 10.0 s, factory setting 3.0 s)
   - Open current field contactor (r53195.0 = 0 or r53195.1 = 0)
   - Wait time according to p50092[01] (0.0 to 10.0 s, factory setting 0.2 s)
   - Control new field contactor (r53195.0 = 1 or r53195.1 = 1)
   - Reverse the speed actual value (with the exception, for p50083 = 3 ... EMF as speed actual value)
   - Wait time according to p50092[02] (0.0 to 10.0 s, factory setting 0.1 s)
   - Enable field firing pulses
   - Wait until I_{field} (r52265) > $I_{field\ set}$ (r52268×p50398)
   - Wait time according to p50092[04] (0.0 to 10.0 s, factory setting 3.0 s)
   - Armature firing pulses are again possible
6. The drive is in operating state o7.2
   Running up is possible in the original direction of rotation when acknowledging using an external "Stop" and "Switch-on"

Please also read the note at the end of Chapter "Direction of rotation reversal using field reversal (Page 593)".

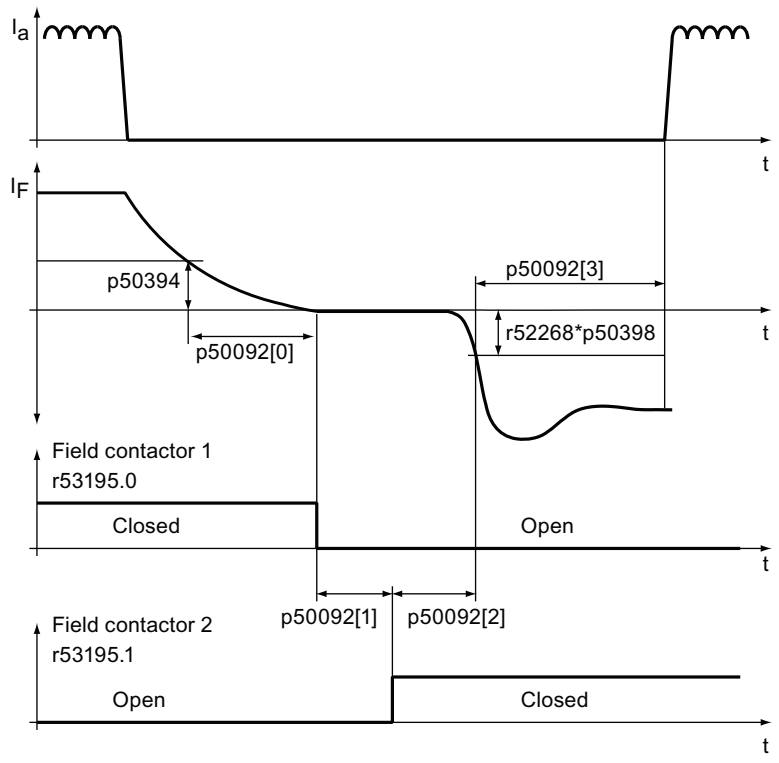

Figure 10-88 Wait times for field reversal (parameter p50092)

10.28 Serial interface with peer-to-peer protocol

General information

The peer-to-peer interface enables BICO interconnections across multiple SINAMICS DCMs. Further, the peer-to-peer interface allows signal connections to be established between SINAMICS DCM converters (article number = 6RA80...) and other converters such as the SIMOREG DC MASTER (article number = 6RA70...) and SIMOREG K (article number = 6RA24...).

Properties

"Peer-to-peer connection" refers to a "connection between partners with equal status". Contrary to classic master-device bus systems (such as PROFIBUS or USS), peer-to-peer connections enable the same converter to act as both a master (setpoint source) and a follower (setpoint recipient).

Signals can be transferred via the peer-to-peer connection from one converter to another in fully digital format.

- **Velocity setpoints** for creating a setpoint cascade, e.g. in paper making machines, film manufacturing machines, and wire drawing machines, as well as fiber stretching plants
- **Torque setpoints** for load distribution control systems on drives that are coupled either mechanically or by means of the material, e.g. horizontal-shaft drives on a printing machine or S-roll drives
- **Acceleration setpoints (dv/dt)** for acceleration precontrol in multi-motor drives
- **Control commands**

The peer-to-peer interface uses the RS485 interface at connector X177 (terminals 37, 38, 39, and 40).

Function diagrams

Function diagram FP9300 shows the settings and BICO interconnection options for the "peer-to-peer connection".

Diagnostics

Parameter r50799 contains information about the distribution of error-free telegrams and telegrams with errors over time, as well as the type of any communications errors that occur.

Table 10-94 Peer-to-peer interface diagnostics

Function	Parameter
Communication diagnostics	r50799 Information about the distribution of error-free telegrams and telegrams with errors over time, as well as the type of any communication errors that occur.
Displaying send data	r50799[0...4] Mirrored display of the send data in p50794[0...4].

Topologies

The peer-to-peer interface supports three topologies:

- Series connection / point-to-point connection
  - Every converter is connected to the previous and following converters through a 2-wire connection.
  - Data is only transferred from the upstream to the downstream converter.
    In addition, the ring can be closed from the last back to the first drive.
  - A classic setpoint cascade can be implemented using this topology.
- Parallel connection
  - The receive terminals of slave drives are connected to the send terminals of the master drive through a 2-wire connection.
  - All following drives receive the setpoints from a common master drive.
- Bus connection
  - All converters are connected with one another through a common 2-wire connection.
  - Data is transferred in one direction only.
  - The drive sending data must be selected using p50817.
    This binector may only be connected to a 1 signal for one converter on the bus.
    Converters where p50817 has a 0 signal bring their send output into a high ohmic state (Z).

Parameterization

Table 10-95 Parameterizing the peer-to-peer interface

Function	Parameter
Peer-to-peer protocol selection	p50790 = 5
PZD number	p50791 = 1 to 5 words
Baud rate	p50793 = 1 to 13, corresponding to between 300 and 187500 baud
Connector input for send data	p50794[0...4]
Bus terminator	p50795 = 0: Bus terminator OFF p50795 = 1: Bus terminator ON
Telegram monitoring time	p50797
Error statistics	r50799[1]: Displays receive errors on the peer-to-peer interface
Binector input for receive enable	p50816
Binector input for send enable	p50817

10.28.1 Examples of peer-to-peer connections

Series connection / point-to-point connection

Each drive receives its own individual setpoint from the previous drive (classic setpoint cascade).

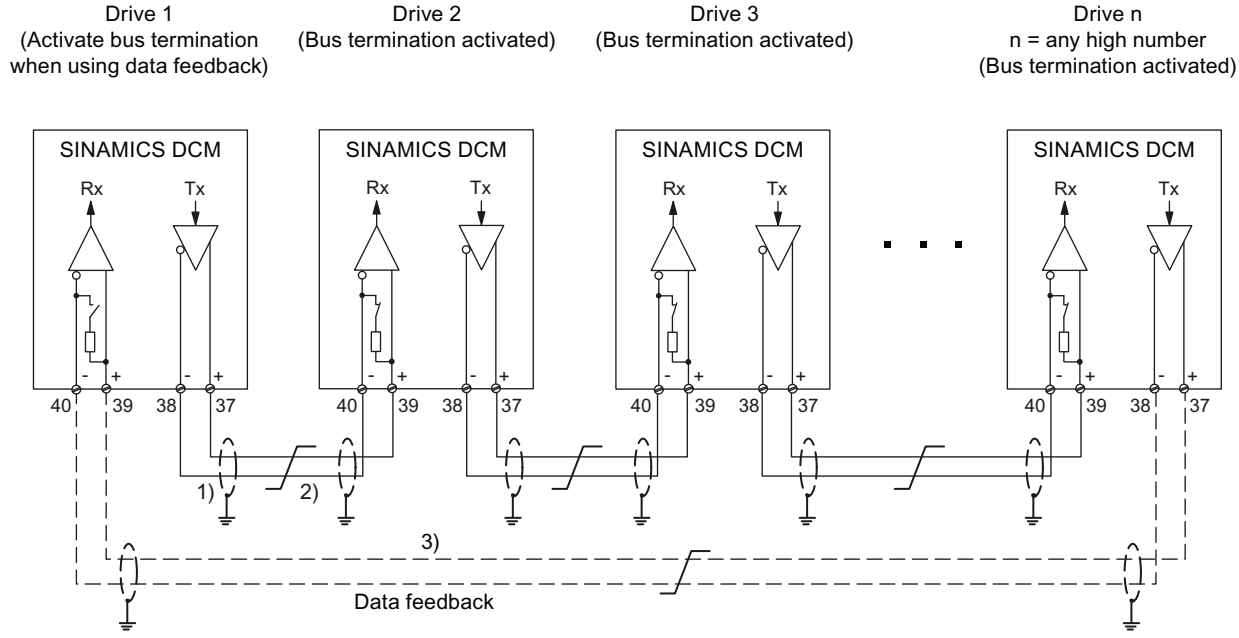

1) The shields for the interface cables must be connected directly on the devices (using a clamp, for example) to device or cabinet ground, with a low level of impedance.

2) Twisted cable, e.g. LIYCY 2×0.5 mm^2; with longer cables, an equipotential bonding cable should be used to ensure that the difference in ground potentials between the link partners remains below 7 V.

3) Optional data feedback, which drive 1 can use to monitor the functionality of the entire circuit.

Figure 10-89 "Series connection / point-to-point connection" peer-to-peer connection type

Parallel connection

Up to 31 slave drives receive the same setpoints from drive 1 (master drive).

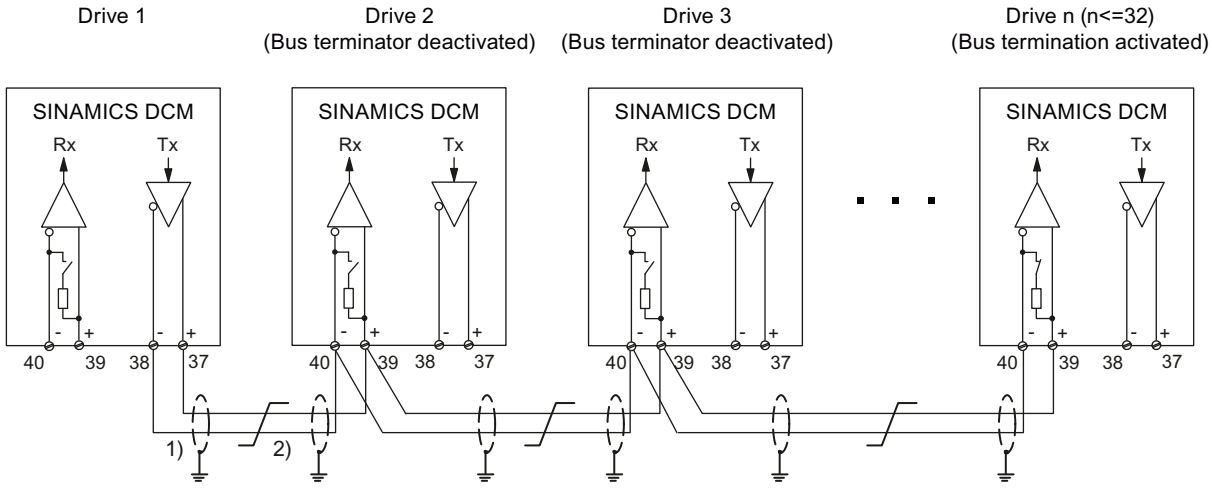

1) The shields for the interface cables must be connected directly on the devices (using a clamp, for example) to device or cabinet ground, with a low level of impedance.

2) Twisted cable, e.g. LIYCY 2×0.5 mm^2; with longer cables, an equipotential bonding cable should be used to ensure that the difference in ground potentials between the link partners remains below 7 V.

Figure 10-90 "Bus connection" peer-to-peer connection type

Bus connection

Up to 31 slave drives receive the same setpoints from a common master drive.

- The drive sending data is selected using p50817 (Enable send) = 1.
- For all of the drives, p50817 (Enable send) must be set = 0.

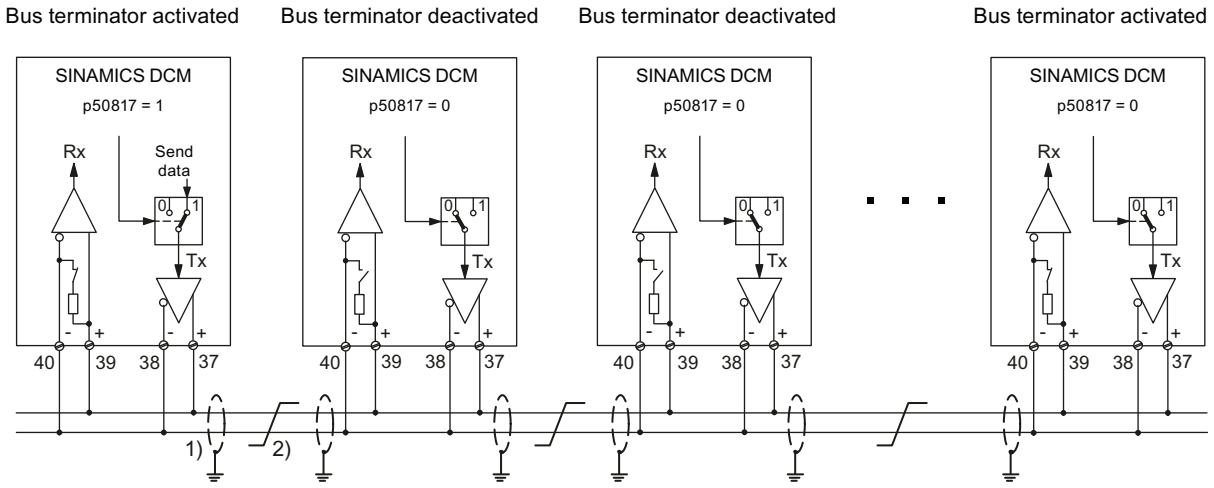

1) The shields for the interface cables must be connected directly on the devices (using a clamp, for example) to device or cabinet ground, with a low level of impedance.

2) Twisted cable, e.g. LIYCY 2×0.5 mm^2; with longer cables, an equipotential bonding cable should be used to ensure that the difference in ground potentials between the link partners remains below 7 V.

Figure 10-91 "Bus connection" peer-to-peer connection type

10.29 Expanding the SINAMICS DCM to include a second CUD

General information

SINAMICS DCM can be optionally equipped with a second CUD, which is inserted in the right-hand slot. This option is only available in conjunction with option G00 (Advanced CUD in left-hand slot). See also Chapter "Ordering information for options and accessories".

For the installation of the second CUD, see Chapter "Installing a second CUD (Page 64)" and "Replacing the CUD (Page 662)".

NOTICE
Installation or removal only in a no-voltage state. Installing or removing a module is only permitted when the SINAMICS DCM is in a no-voltage state.

Properties

The right-hand CUD is used for system-specific extension of SINAMICS DCM functions.

It enables the following function extensions:

- Doubling the number of hardware inputs and outputs for applications requiring more analog inputs, analog outputs, digital inputs, or digital outputs
- Additional computing capacity for free function blocks and, above all, for application-specific function diagrams generated using DCC

Connection between the left-hand and right-hand CUD:

This involves using the parallel-connection interface.
16 BICO connections can be established in each direction. Function diagrams FP9350, FP9352, and FP9355 show the settings and BICO interconnection options for the parallel-connection interface.

The hardware connection for the two CUDs is established inside the unit; there is no need for an external connection using connector X165 or X166. It is also possible to use the parallel interface for controlling a power unit-side configuration, where several SINAMICS DCM units are connected in parallel.

Parameterization

The right-hand CUD is parameterized using the AOP30 or the STARTER commissioning tool. The Basic Operator Panel BOP20 cannot be used for this purpose.

- Parameterizing the right-hand CUD using the AOP30:
  The AOP30 must be connected to connector X178 (RS485 interface) or X179 (RS232 interface) on the right-hand CUD.
- Parameterization of the right-hand CUD using STARTER:
  STARTER views the right-hand CUD as a separate PROFIBUS node. Either the unique bus address must be set using the AOP30, or STARTER must first be connected as the sole bus node in order to set the unique bus address.

The second CUD must be parameterized as an "independent node" for the parallel-connection interface, meaning that it participates in BICO exchange between multiple CUDs.

Table 10-96 Parameterization without power unit-side parallel connection of several SINAMICS DCMs

Left-hand CUD		Right-hand CUD	
p51800 = 1	Independent node	p51800 = 1	Independent node
p51801	Number of words to be sent	p51801	Number of words to be sent
p51802 = 2	Minimum number of stations	p51802 = 2	Minimum number of stations
p51803 = 0	"n+m mode" not active	p51803 = 0	"n+m mode" not active
p51804[..]	Establish required BICO connections	p51804[..]	Establish required BICO connections
p51805 = 1	Bus terminator	p51805 = 1	Bus terminator
p51806 =	Unique station address	p51806 =	Unique station address

Table 10-97 Parameterization with power unit-side parallel connection of several SINAMICS DCMs

Left-hand CUD		Right-hand CUD	
p51800	Required as with parallel connection of power units	p51800 = 1	Independent node
p51801	Number of words to be sent	p51801	Number of words to be sent
p51802	Required as with parallel connection of power units	p51802	Required as with parallel connection of power units
p51803	Required as with parallel connection of power units	p51803 = 0	"n+m mode" not active
p51804[..]	Establish required BICO connections	p51804[..]	Establish required BICO connections

Left-hand CUD		Right-hand CUD	
p51805	Required as with parallel connection of power units	p51805 = 0	No bus terminator
p51806 =	Unique station address	p51806 =	Unique station address

Normally, on the CUD on the right-hand slot the closed-loop drive control (setpoint processing, ramp-function generator, closed-loop speed control, armature current control, closed-loop EMF control, closed-loop field-current control) is not required.

For that reason it makes sense to deactivate the closed-loop drive control (with p50899[0...6] = 0, see also function diagram 1721) in order to gain more CPU time for free function blocks and, especially, for application-specific function diagrams created with DCC.

10.30 Terminal Module Cabinet TMC (option G63)

The Terminal Module Cabinet (TMC) enables the simple connection of the CUD standard signals (X177) via spring-loaded terminals in an easily accessible area of the control cabinet.

See Chapter “Ordering information for options and accessories (Page 32)” for ordering data.

The dimensions needed in the control cabinet are approx. 230 mm x 45 mm.



Figure 10-92 Terminal Module Cabinet

The CUD is equipped with a "Cabinet Board".

During installation, connectors X1 and X2 on the Cabinet Board must be connected to connectors X1 and X2 on the TMC with the supplied cables (3 m). The cables must be laid in a cable duct.

For terminal assignment, see Chapter “Connector assignment (terminals, Faston mounting tabs, ribbon cables) (Page 137)”.

10.31 Runtime (operating hours counter)

Total system runtime

The total system runtime is displayed in r2114 (Control Unit).

- Index 0 = system runtime in ms.
  After reaching 86400000 ms (24 h), the value is reset.
- Index 1 = system runtime in days.
  The counter value is saved when the power is switched off. After the drive unit is powered up, the counter continues to run with the most recently saved value.

Note

Errors and alarms are stamped with this system runtime.

If a connected AOP30 is parameterized as the time-of-day master (see Chapter "Assigning parameters to make AOP30 time-of-day master (Page 369)"), faults and alarms are provided with a real-time stamp.

Relative system runtime

The relative system runtime since the last POWER ON is displayed in p0969 (Control Unit) in ms. The counter runs over after 49 days.

10.32 Diagnostics

10.32.1 Diagnostic memory

To provide support for troubleshooting and resolving problems, the SINAMICS DCM records various data in a diagnostics file. Siemens specialists can use the contents of this file to glean more in-depth information about the cause of inexplicable faults or other problems such as blown fuses or defective thyristors.

When contacting Siemens with queries related to problems of this type, it is, therefore, advisable that you both read out this file and e-mail a copy of it to the Siemens experts.

With parallel or series connection, the diagnostics files of **all** devices must always be read out and sent to the Siemens experts.

Proceed as follows to read out the diagnostics file:

1. Insert the memory card into the drive.
2. Select either of the following two methods to copy the diagnostics file to the memory card:
   – Set p50832 = 1: This copies the diagnostics file into the **\USER\SINAMICS\DATA\LOG** folder.
   – Set p50832 = 2: This copies the diagnostics file into the **\USER\SINAMICS\DATA** folder.

   The copying process takes approximately 2 minutes. Copying is complete when p50832 takes on the value 0 again.
   The diagnostics file is called **DiagStor.spd** and is approximately 600 KB in size.

Note

Before starting a firmware update, copy the diagnostics files to the memory card.

For more details on the diagnostics memory, please refer to function diagram FP8052.

10.32.2 Trend recorder function

SINAMICS DCM enables data to be recorded through 4 channels over an extended period of time and with a large memory depth. A file on the memory card takes on the role of a long-term storage facility. The signals to be recorded are updated periodically and written cyclically to the file.

The file contains a line-by-line account of the operating hour and values for the 4 channels, in the form of an ASCII string, and can be evaluated and visualized using standard PC tools (such as Notepad or Excel).

Recording must be started manually (by setting p51705 = 0/1/2). With a recording period of 1 second, the file grows by approximately 100 kB per hour.

When starting via p51705 = 1, recording is automatically stopped after the number of entries set in p51706 – and p51705 is set to 0.

When starting via p51705 = 2, the oldest entries are overwritten after the number of entries set in p51706. Recording must be stopped manually (with p51705 = 0).

The file is called **Track.csv** and can be found in the **\USER\SINAMICS\DATA\LOG** directory on the memory card.

For more details on the trend recorder function, please refer to function diagram FP8050.

10.32.3 Thyristor diagnostics

The SINAMICS Control Module can perform a self-test of the external power unit. As a consequence, defective thyristors and other faults can be detected in the power unit.

Note

The thyristor diagnostics cannot be used when external power units are connected in series.

Note

When connecting SINAMICS DCMs in parallel (6-pulse or 12-pulse), the thyristor diagnostics must only be selected on the master. The thyristor diagnostics are then performed first on the master and then automatically in succession on all followers. If a faulty thyristor is detected on an external power unit, the appropriate fault message is issued on the assigned Control Module and not on the master on which the thyristor diagnostics was started.

Note

If a thyristor is fused, in 6-pulse parallel connection it is not possible to identify in which of the parallel power units the defective thyristor is located. The corresponding fault message occurs on the master.

Selecting thyristor diagnostics

Thyristor diagnostics are performed during the switch-on procedure. Parameter p50830 can be used to select for which switch-on procedures thyristor diagnostics is performed.

p50830 = 0 never
= 1 when the electronics is switched on for the first time
= 2 at each ON
= 3 at the next ON (p50830 is then reset to 0)

Thyristor diagnostics sequence

At each switch-on procedure, starting from operating state o7 the drive goes into state o0. During thyristor diagnostics, it remains in operating state o3 (see parameter r50000). Thyristor diagnostics takes approx. 30 s.

Thyristor diagnostics comprises two parts:

1. **Checking the thyristor for its blocking capability**
   All thyristors are individually fired and it is not permissible for current to flow. If it does, this indicates that a thyristor is fused or it triggers with forward breakover or a ground fault has occurred, i.e. terminal 1C or 1D is connected to ground.

NOTICE
Ground fault monitor recommended In IT line systems (i.e. in systems with a non-grounded neutral point of the supply transformer), the thyristor diagnostics cannot detect a single-pole ground fault. For these types of line supplies, it is recommended that a ground fault monitor is used.

⚠ **WARNING**
Electric shock or electric arc during operation with ground fault The type and location of the fault cannot be established just from a ground fault message. In the event of continued operation, serious aftereffects all the way to electric arcs are possible. This can result in death, serious injury or material damage. • If a ground fault occurs during operation, the system must be switched off immediately. Then identify and eliminate the source of the ground fault. • The plant operating company is responsible for the consequences for further operation after a ground fault has been detected. Carry out a risk analysis.

2. **Checking that the thyristors can be triggered**
   All of the thyristors are triggered in pairs and in this case, a current must flow (as a minimum, 5% of r50072[1]). Otherwise, a thyristor cannot be triggered. This can also be caused by a fault in the firing pulse generation.

NOTICE
It is possible that the motor shaft rotates The low current that flows during this test can cause the motor shaft to briefly rotate for motors that are very easy to move and are not loaded, as in this operating state, the full field is already present.

Faults that are detected result in fault message F60061. The fault value provides information as to which thyristor was detected to be defective and what the possible cause of the fault could be.

10.32.4 Description of the LEDs on the CUD

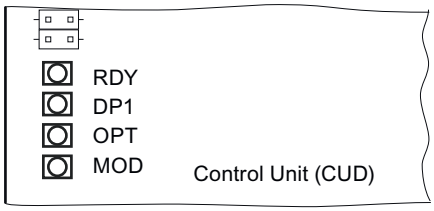

Figure 10-93 Layout of the LEDs

The individual states during ramp-up are indicated by means of the LEDs on the CUD.

- The duration of the individual states varies.
- If an error occurs, the ramp-up procedure is aborted and the cause of the error is indicated via the LEDs.
  Remedy: Insert the appropriate memory card with the correct firmware and parameterization.
- At the end of a successful ramp-up, all the LEDs are switched off briefly.
- After the ramp-up, the LEDs are controlled via the loaded firmware.
  The description of the LEDs after ramp-up applies.

Note

The LEDs are only visible when the front cover of the SINAMICS DCM is opened.

CUD - Response of LEDs during a firmware update

Table 10-98 Firmware update

LED				Meaning
RDY	DP1	OPT	MOD	
Red	Off	Off	Off	Firmware update in progress.
Red 2 Hz	Red	Off	Off	Firmware on the memory card is incomplete or defective.
				The firmware update failed. The CRC of the programmed firmware is incorrect.
Red 0.5 Hz	Red 0.5 Hz	Off	Off	The firmware has been successfully completed. The electronic power supply must be switched off and back on again.
Red 2 Hz	Red 2 Hz	Off	Off	The firmware on the memory card does not belong to SINAMICS DCM.
				The firmware version and hardware version of the CUD are not compatible. For information on the hardware/firmware compatibility, see Chapter "Upgrading the device firmware (Page 656)".
Orange 0.5 Hz	x	x	Off	DRIVE-CLiQ component is being updated.
Orange 2 Hz	x	x	Off	DRIVE-CLiQ component has been updated.

CUD - Response of LEDs during ramp-up (following POWER ON)

Table 10-99 Ramp-up

LED				Status	Remark
RDY	**DP1**	**OPT**	**MOD**		
Red	Red	Off	Off	BIOS loaded	-
Red 2 Hz	Red	Off	Off	BIOS error	-
Red 2 Hz	Red 2 Hz	Off	Off	File error	Memory card not present or flash file system faulty
Red	Orange flashing	Off	Off	Firmware loading	DP1 flashing without specific flashing frequency
Red	Off	Off	Off	Firmware loaded	-
Off	Red	Off	Off	No CRC error	Firmware checked
Red 0.5 Hz	Red 0.5 Hz	Off	Off	CRC error	Firmware checked, CRC error
Orange	Off	Off	Off	Drive initialization	-

Response of the LEDs after ramp-up

Table 10-100 CUD - Description of the LEDs after ramp-up

LED	Color	Status	Description, cause	Remedy
RDY (READY)	-	Off	Electronics power supply is missing or outside permissible tolerance range.	Check power supply
	Green	Continuous light	The component is ready for operation. No errors are present.	-
		0.5 Hz flashing light	Commissioning/reset	-
		2 Hz flashing light	Writing to memory card or internal flash memory **Notice!** The electronic power supply for the SINAMICS DCM must not be switched off during this write operation. Switching off the electronic power supply can lead to the loss of the parameter assignments. Also refer to Chapter "Operation", Section "Memory card functions".	-
	Red	2 Hz flashing light	General errors	Check parameterization/ configuration
	Orange	0.5 Hz flashing light	Updating the firmware of the connected DRIVE-CLiQ components	–
		2 Hz flashing light	DRIVE-CLiQ component firmware update complete. Wait for POWER ON for the respective components.	Carry out POWER ON for the respective components
	Green/ orange or red/ orange	1 Hz flashing light	Component detection via LED is activated (p0124[0]). **Note:** Both options depend on the LED state when component detection is activated via p0124[0] = 1.	-

LED	Color	Status	Description, cause	Remedy
DP1 PROFIdrive cyclic operation	-	Off	Cyclic communication has not (yet) taken place. **Note:** The PROFIdrive is ready to communicate when the CUD is ready for operation (see LED RDY).	-
	Green	Continuous light	Cyclic communication is taking place.	-
		0.5 Hz flashing light	Bus fault (dataEx, no operate) Full cyclic communication is not yet taking place. Possible cause: The controller is not transferring any setpoints.	-
	Red	Continuous light	USS: No activity on bus	
		0.5 Hz flashing light	USS: Activity on bus; no PZD received	
			Bus fault (no dataEx)(config fault)	-
		2 Hz flashing light	Bus fault (no more dataEx)	-
			Bus fault (search baud rate)	
			No link established	-
OPT (OPTION)	-	Off	Electronic power supply is missing or outside permissible tolerance range, Component not ready for operation, Option Board not installed, no associated drive object has been created,	Check power supply and/or component
	Green	Continuous light	Option Board is ready for operation.	-
		0.5 Hz flashing light	Depends on the Option Board used	-
	Red	2 Hz flashing light	At least one fault is present in this component. Option board not ready (e.g. after switching on)	Remedy and acknowledge fault
RDY and DP1	Red	2 Hz flashing light	Bus fault – communication has been interrupted	Correct fault
RDY and OPT	Orange	0.5 Hz flashing light	The firmware of the connected CBE20 Communication Board Ethernet is being updated	-
MOD	-	Off	Reserved	-

10.32.5 Diagnostics via STARTER

The diagnostic functions support commissioning and service personnel during commissioning, troubleshooting, diagnostics and service activities.

Requirement

- Online operation of the STARTER commissioning tool.

Diagnostic functions

The following diagnostic functions are available in the STARTER commissioning tool:

- Specification of signals with the ramp-function generator
- Signal recording with the trace function
- Analysis of the control response with the measuring function

10.32.5.1 Function generator

The function generator is part of the STARTER commissioning tool.

The function generator can be used, for example, to perform the following tasks:

- Measuring and optimizing control loops.
- Comparing the dynamic response of coupled drives.
- Specifying a simple traversing profile without a traversing program.

The function generator can be used to generate various waveforms.

In the "Connector output" operating mode (r4818), the output signal can be injected into the control loop via the BICO interconnection.

Properties

- The following freely parameterizable waveforms can be set:
  - Square-wave
  - Staircase
  - Triangular
  - Sinusoidal
  - PRBS (pseudo random binary signal, white noise)
- An offset is possible for each signal. The power-up to the offset can be parameterized. The signal generation starts after the power-up to the offset.
- Limitation of the output signal to the minimum and maximum value can be set.

Further waveforms

Additional waveforms can be generated.

Example:

The "triangular" waveform can be parameterized with "Upper limit" to produce a triangle with no peak.

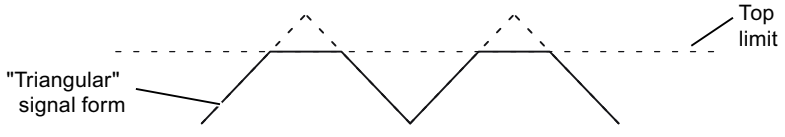

Figure 10-94 "Triangular" without peak waveform

Parameterizing and operating the function generator

You operate and parameterize the function generator via STARTER.

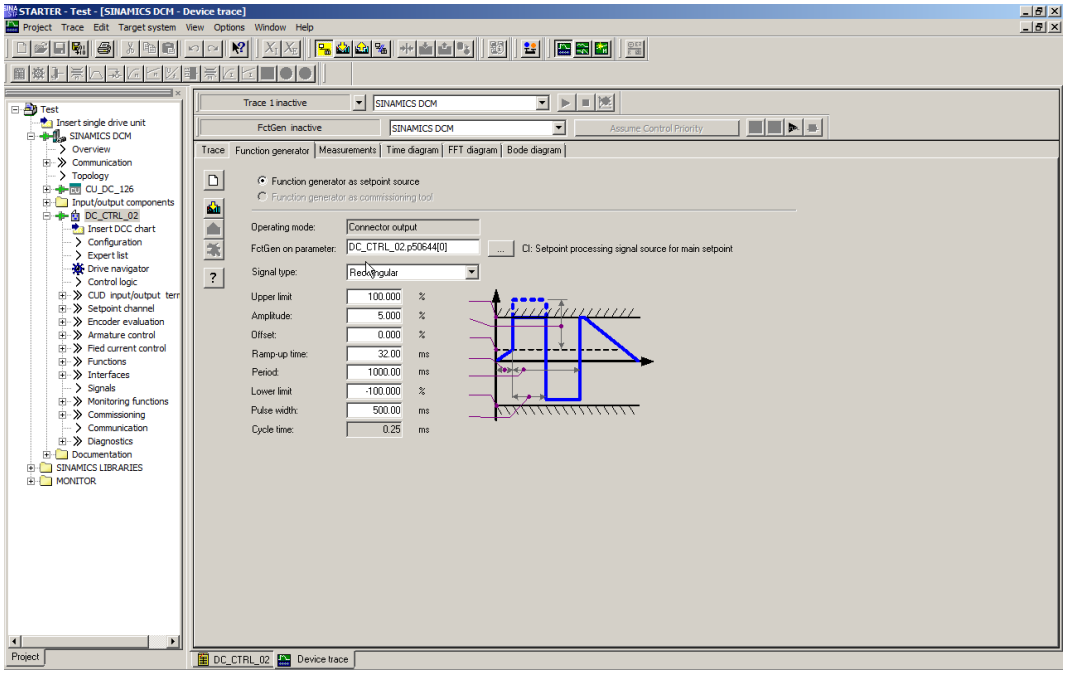

Figure 10-95 Function generator

Note

Please refer to the online help for more information about parameterization and operation.

Note

The "Function generator as commissioning tool" button must not be selected!

If this button is still selected, then the message "Error occurred while parameterizing" is output on STARTER when "Loading the parameterization to the drive" as well as alarm A02007 on the SINAMICS DCM (Function generator: Drive not SERVO/VECTOR).

Starting/stopping the function generator

⚠ WARNING

Hazardous axis movement

With the corresponding ramp-function generator parameter settings (e.g. offset), the motor can "drift" and travel to its end stop.

The motion of the drive is not monitored with the function generator activated.

- Observe the general safety instructions.

Starting the function generator:

1. Load the function generator.
   - Click the symbol.
     or
   - In the project navigator, double-click "Drives" > "Drive_xy" > "Commissioning" > "Function generator".
2. Select "Function generator as setpoint source".
3. Select the BICO input.
4. Set the waveform, for example, "Square-wave".
5. Click the "Assume control priority!" button.
6. For "Sign of life monitoring", click the "Accept" button
   (the control priority button then changes to yellow).
7. Click the "Drive on" symbol.
8. Start the function generator by clicking the triangle next to the red zero
   ("Start FctGen" button).
9. Read the "Caution" note and confirm with "Yes".
   The drive starts and runs through the set trace function.
   Trace recordings are now possible.

Stopping the function generator:

1. Click the "Stop FctGen" button.
   or
2. Click the "Drive off" icon to stop the drive.

Parameterization

The "Function generator" parameterization screen is selected with the symbol in the toolbar of the STARTER commissioning tool.

10.32.5.2 Trace function

Single trace

You can use the trace function to record measured values over a defined period, depending on trigger conditions. Alternatively, the measured values can also be recorded using immediate recording.

In the STARTER commissioning tool you can parameterize the trace function by using the "Trace" parameterizing screen form.

Calling the "Trace" parameterizing screen form

In the STARTER commissioning tool, click the symbol (device trace-function generator).

The "Trace" parameterizing screen form is then displayed.

Example:

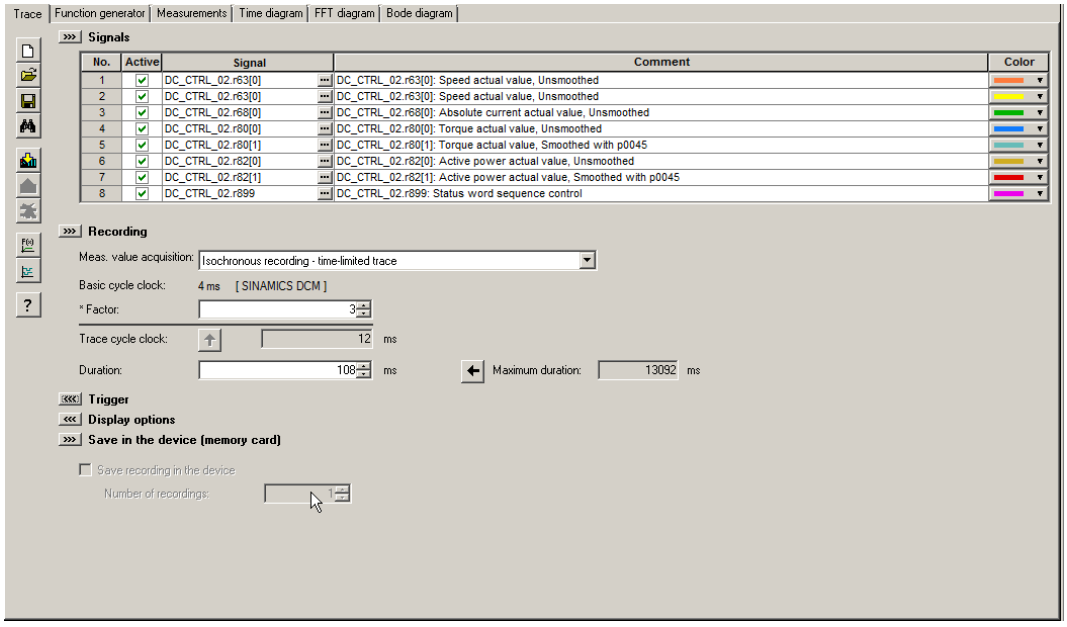

Figure 10-96 Trace function

Parameterizing and operating the trace function

Note

Detailed information on how to parameterize and operate the trace function is available in the STARTER online help in Chapter "Trace, measuring functions and automatic controller setting".

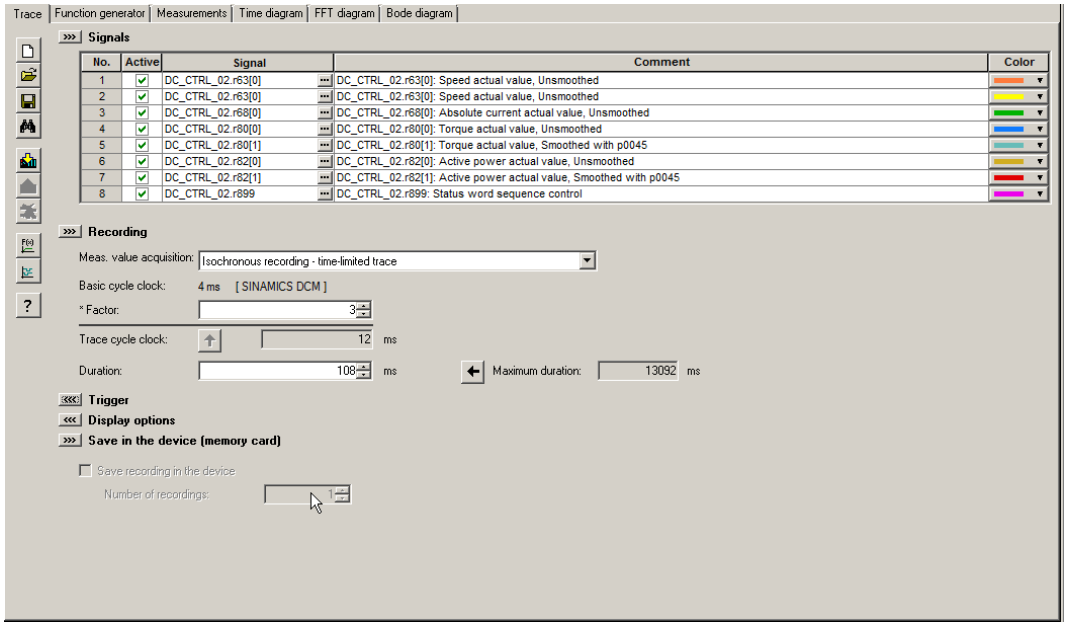

Figure 10-97 Trace function

The device cycle time display flashes 3 times at around 1 Hz when the time slice is changed from < 4 ms to ≥ 4 ms (see description at "Properties"). The display also flashes in the inverse direction from ≥ 4 ms to < 4 ms.

Properties

- Two independent traces
- Up to eight recording channels for each trace
  When more than four channels per single trace are used, the trace's device clock cycle is switched automatically from 0.250 ms to 4 ms. As a consequence, the performance of the SINAMICS DCM is not influenced too strongly by the trace function.
- Single trace:
  Device clock cycles of the SINAMICS DCM trace
  Up to four channels: 0.250 ms
  ≥ five channels: 4 ms
  The specified trace cycles can be increased.
- Endless trace:
  The parameter data is written to the memory until this is full.
  Further parameter data is then lost.
  A ring buffer can be selected in order to avoid this. When the ring buffer is activated, then the STARTER commissioning tool automatically starts again from the beginning to write to the trace memory after the last trace parameter was saved.
  Device cycle of the SINAMICS DCM trace for an endless trace:
  Up to four channels: 2 ms
  ≥ five channels: 4 ms
- Triggering
  - Without triggering (recording immediately after start)
  - Triggering on signal with edge or on level
- STARTER commissioning tool
  - Automatic or adjustable scaling of the display axes
  - Signal measurement via cursor
- Adjustable trace cycle: Integer multiples of the basic sampling time

Multiple trace

A multiple trace consists of single, completed, consecutive traces. Using multiple tracing on a card, it is possible to cyclically record (a specific number) traces with the same trace configuration (number of channels, sample depth, recording cycle,..), and to save these traces persistently on the drive memory card.

The "Endless trace", "Single trace" and "Multiple trace" functions cannot be used simultaneously. With a correspondingly incorrect configuration, alarm "A02097" is output.

However, a multiple trace with a cycle of 1 is nothing more than a single trace with saved measurement results.

NOTICE
Shorter service life of memory cards as a result of multiple traces. The service life of the cards can be shortened by the multiple traces because the memory media is subject to wear as a result of the write access operations from a technical point of view.

Note

The performance of the complete system can be negatively influenced by a continuous multiple trace.

Requirement

A multiple trace is only possible if the memory card is plugged in and not blocked. In this case, alarm "A02098 MTrace: Cannot be saved" is output with alarm value "1".

Activating a multiple trace

Note

The multiple trace can be activated or set separately for each trace recorder.

1. In STARTER, click the symbol (device trace-function generator).
   The "Trace" parameterizing screen form is then displayed.

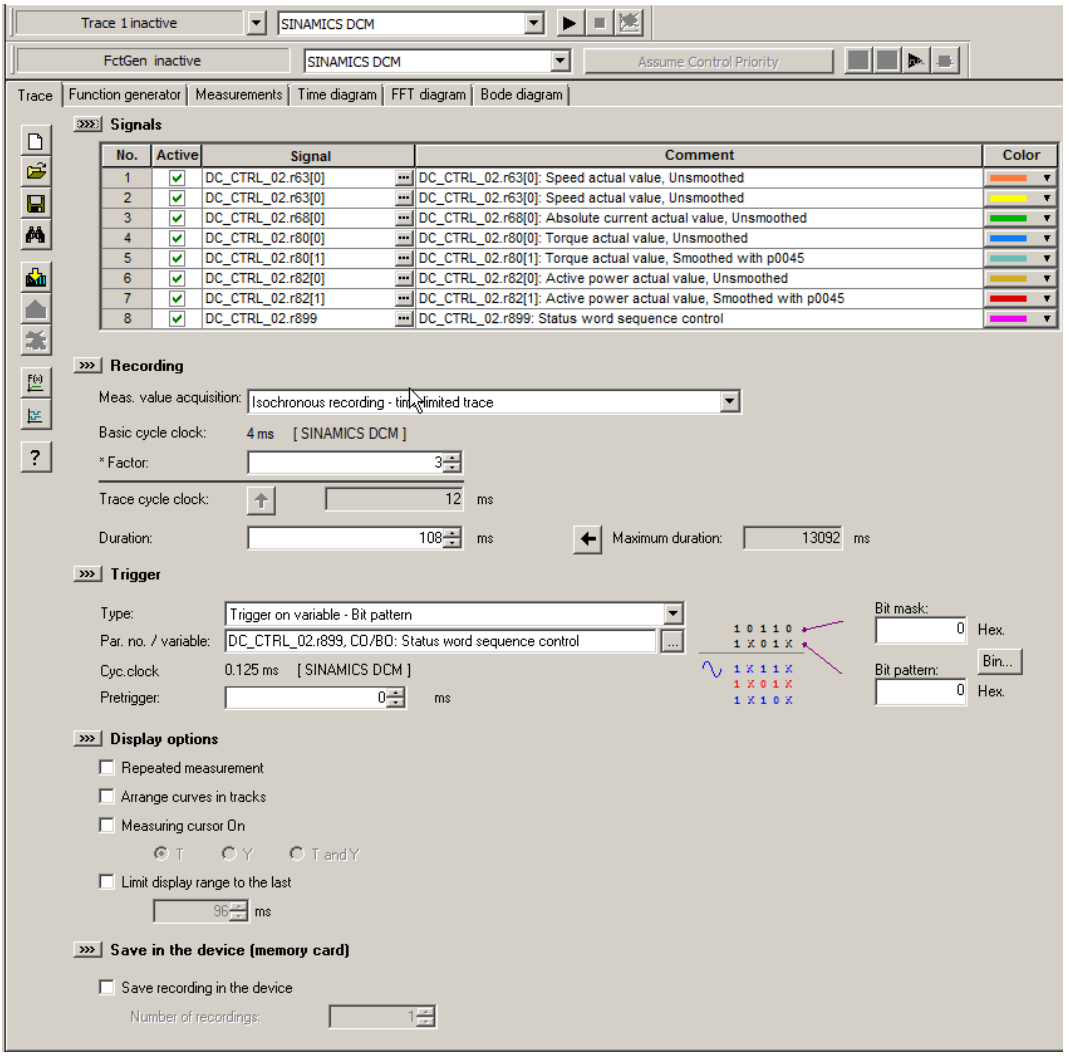

Figure 10-98 Multiple trace in STARTER

2. Activate the "Save recording in the device" checkbox.
3. Enter the number of cycles in the "Number of recordings" field.

Note

Detailed information on how to parameterize and operate the trace function is available in the STARTER online help in Chapter "Trace, measuring functions and automatic controller setting".

4. Make the required trace settings and save the settings.

Sequence of a multiple trace

1. A multiple trace is started just like a conventional single trace using the STARTER "Trace" screen form.
2. The multiple trace component saves the measurement result after the trigger condition has occurred and the trace data has been completely recorded.
3. The single trace that has actually been completed is now automatically restarted from the multiple trace component. In this case, the same trace configuration (trigger condition, recording cycle, etc.) is used as before. The trace buffer of the previous single trace is emptied in the process.

Trace status

The status of the multiple trace is displayed in the screen form (red frame):

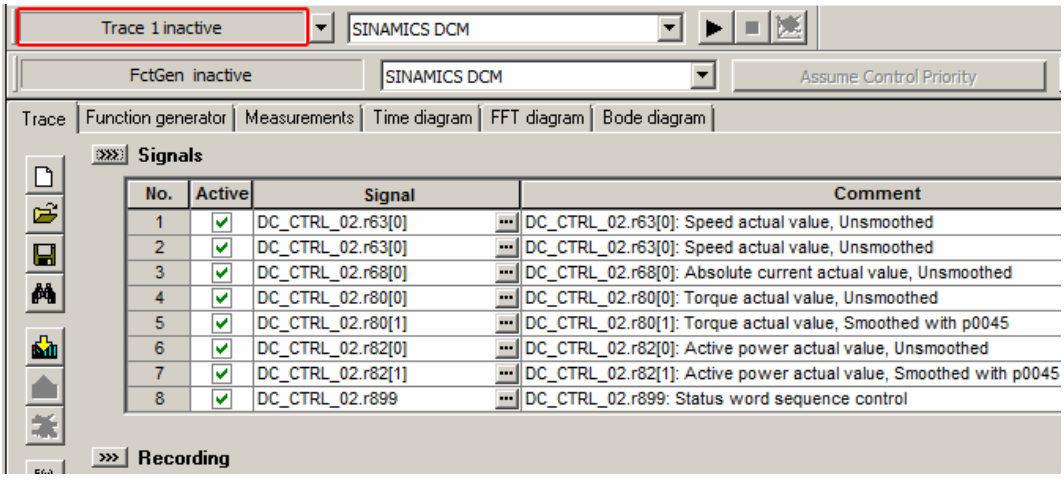

Figure 10-99 Trace status in STARTER

Startup trace

A startup trace basically consists of a conventional single trace with all of its configuration options (number of channels, sampling depth, recording cycle, etc.). With the appropriate configuration, a startup trace is automatically active after a drive restarts.

Configuring the startup trace

1. In STARTER, click the symbol (device trace-function generator).
   The "Trace" parameterizing screen form is then displayed.

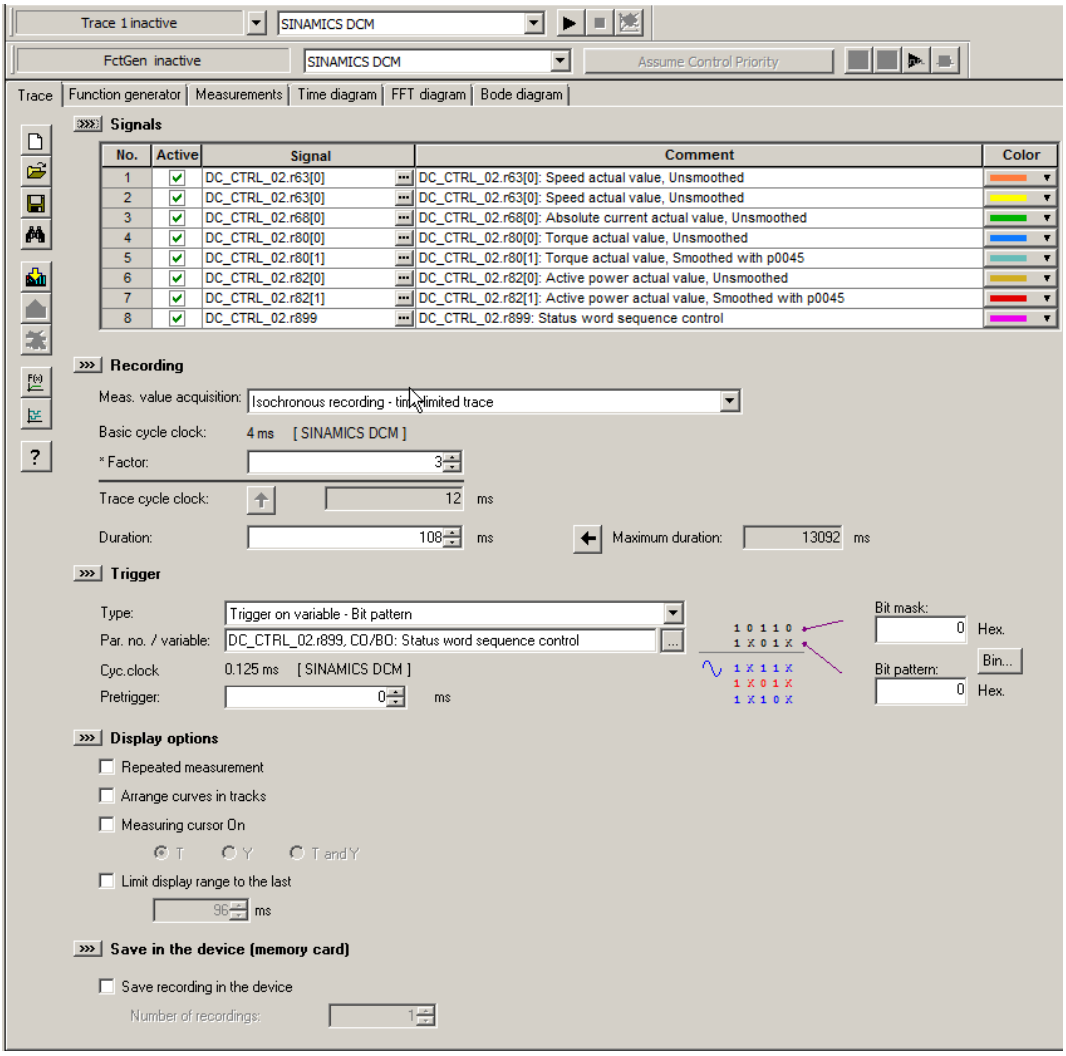

Figure 10-100 Startup trace in STARTER

2. Activate the "Save recording in the device" checkbox.
3. Enter a number ≥ 1 in the "Number of recordings" field.

Note

Detailed information on how to parameterize and operate the trace function is available in the STARTER online help in Chapter "Trace, measuring functions and automatic controller setting".

4. Make the required trace settings and save the settings.

5. Start the trace.
   This is followed by the prompt whether the parameterization in the device should be saved.

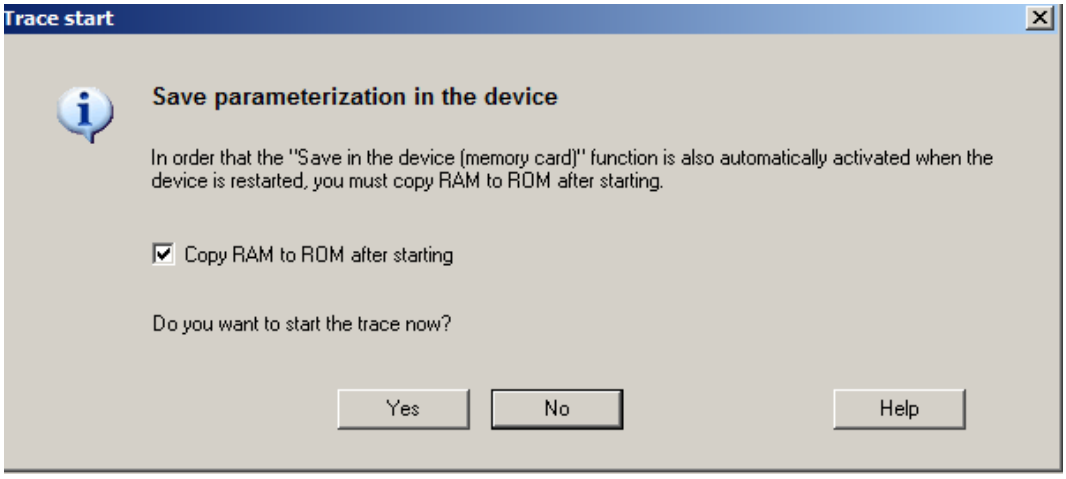

Figure 10-101 Trace save prompt in STARTER

6. Activate the "Copy RAM to ROM after starting" option.
7. Click "Yes" to start the trace.
   After the restart (POWER ON) of the SINAMICS DCM, the trace is started automatically (without a user action). After satisfying the trigger condition, the measurement is saved on the memory card in the USER\SINAMICS\DATA\LOG directory as ACX file. The trace is then restarted automatically. As many files are created as set at "Number of recordings". The oldest file is overwritten.
   In order to view the measurements later with STARTER, the memory card must be removed from the SINAMICS DCM and inserted into the PC. The files can then be opened with the STARTER trace.

Overview of important alarms and faults (see SINAMICS DCM List Manual)

- A02097 MTrace: Multiple trace cannot be activated
- A02098 MTrace: Cannot be saved

10.32.6 Faults and alarms

10.32.6.1 General information

Description

The errors and states detected by the individual components of the drive unit are indicated by messages.

The messages are categorized into faults and alarms.

Note

The individual faults and alarms are described in the section titled "Faults and alarms" in the SINAMICS DCM List Manual. Here you can also find a section titled "Function diagrams" → "Faults and alarms", which contains function diagrams for the fault buffer, alarm buffer, fault trigger, and fault configuration.

Properties of faults and alarms

- Faults
  - Are identified by Fxxxxx
  - Can lead to a fault reaction
  - Must be acknowledged once the cause has been remedied
  - Status via Control Unit and LED RDY
  - Status via PROFIdrive status signal ZSW1.3 (fault active).
  - Entry in the fault buffer
- Alarms
  - Are identified by Axxxxx
  - Have no further effect on the drive unit
  - The alarms are automatically reset once the cause has been remedied. No acknowledgment is required.
  - Status via PROFIdrive status signal ZSW1.7 (alarm active).
  - Entry in the alarm buffer
- General properties of faults and alarms
  - Can be configured (e.g. change fault to alarm, fault reaction)
  - Triggering on selected messages possible
  - Initiation of messages possible via an external signal
  - Contains the component number for identifying the SINAMICS component involved
  - Contains diagnostic information on the message involved

Acknowledging faults

The list of faults and alarms specifies how each fault is acknowledged after the cause has been remedied.

1. Acknowledgment of faults with "POWER ON"
   - Switch the drive unit on/off (POWER ON).
2. Acknowledgment of faults with "IMMEDIATE"
   - Via PROFIBUS control signal
     STW1.7 (reset fault memory): 0/1 edge
     Set STW1.0 (ON/OFF1) = "0" and "1"
   - Via external input signal
     Binector input and interconnection with digital input
     p2103 = "Requested signal source"
     p2104 = "Requested signal source"
     p2105 = "Requested signal source"
     Across all of the drive objects (DO) of a Control Unit
     p2102 = "Requested signal source"
3. Acknowledgment of faults with "PULSE INHIBIT"
   - The fault can only be acknowledged with a pulse inhibit (r0899.11 = 0).
   - The same options are available for acknowledging as described under acknowledgment with IMMEDIATE.

Note

The drive cannot resume operation until all active faults have been acknowledged.

10.32.6.2 Buffer for faults and alarms

Note

A fault buffer and alarm buffer are provided for each drive. The drive and device-specific messages are entered in these buffers.

The contents of the fault buffer are saved to the non-volatile memory when the Control Unit is powered down, i.e. the fault buffer history is still available when the unit is powered up again.

Note

The entry in the fault/alarm buffer is made after a delay. For this reason, the fault/alarm buffer should not be read until a change in the buffer is also recognized (r0944, r2121) after "Fault active"/"Alarm active" is output.

Fault buffer

Faults which occur are entered in the fault buffer as follows:

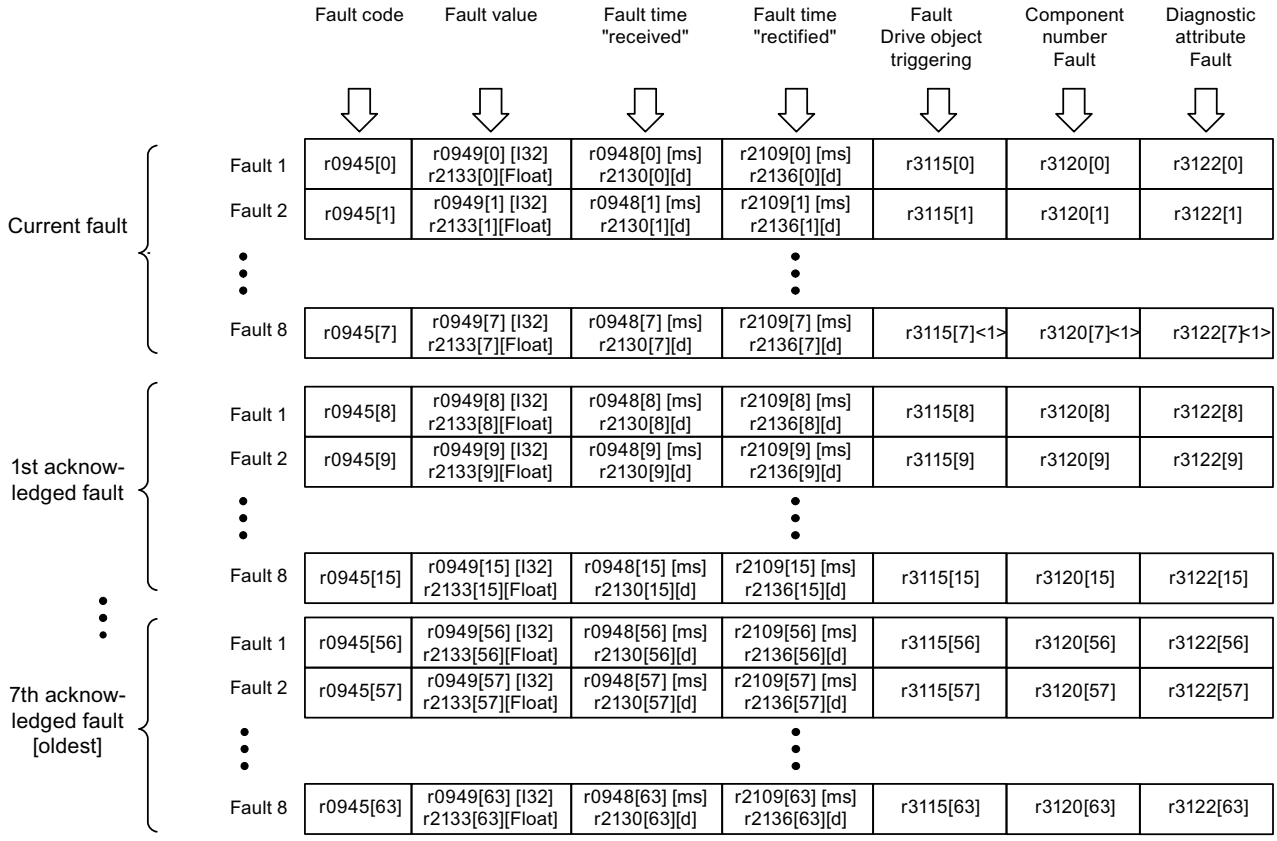

<1> This fault is overwritten when “newer” faults occur

Figure 10-102 Structure of the fault buffer

Properties of the fault buffer:

- A new fault incident encompasses one or more faults and is entered in "Current fault incident".
- The entries appear in the buffer according to the time at which they occurred.
- If a new fault incident occurs, the fault buffer is reorganized. The history is recorded in "Acknowledged fault incident" 1 to 7.
- If the cause of at least one fault in "Current fault incident" is remedied and acknowledged, the fault buffer is reorganized. Faults that have not been remedied remain in "Current fault incident".
- If "Current fault incident" contains 8 faults and a new fault occurs, the fault in the parameters in index 7 is overwritten by the new fault.
- r0944 is incremented each time the fault buffer changes.
- A fault value (r0949) can be output for a fault. The fault value is used to diagnose the fault more accurately; please refer to the fault description for details of the meaning.

Clearing the fault buffer:

- The fault buffer is reset as follows: p0952 = 0

Alarm buffer, alarm history

The alarm buffer comprises the alarm code, the alarm value, and the alarm time (received, resolved). The alarm history occupies the last indices ([8...63]) of the parameter.

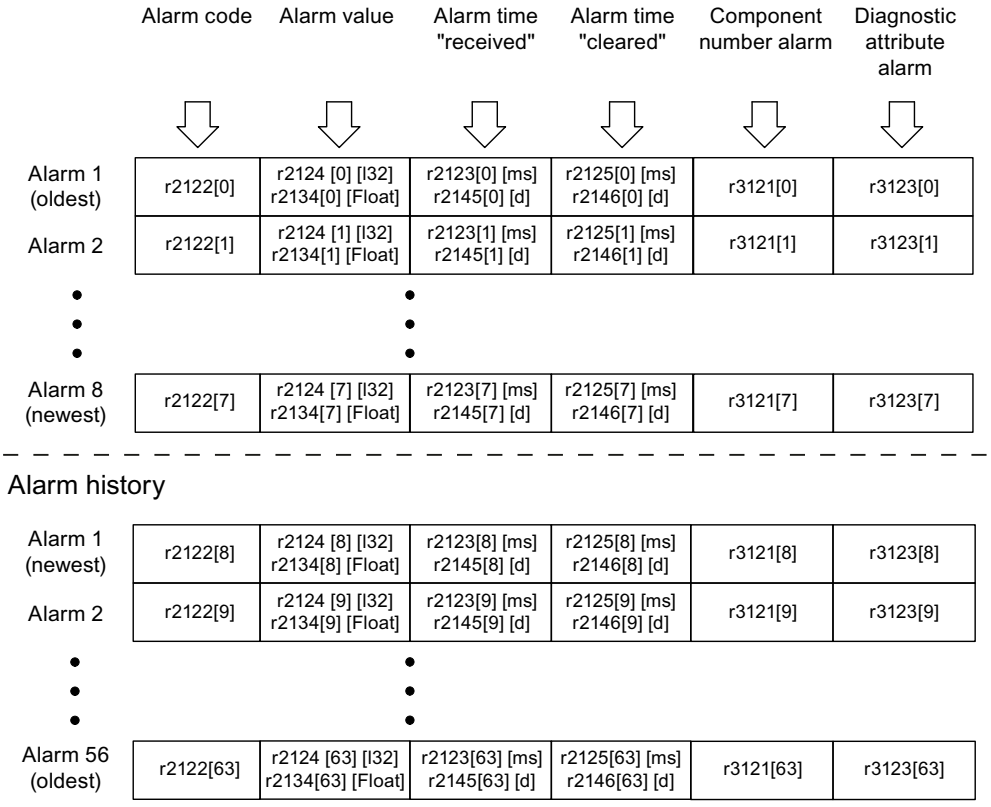

Figure 10-103 Structure of alarm buffer

Alarms that occur are entered in the alarm buffer as follows:

A maximum of 64 alarms are displayed in the alarm buffer:

- Index 0 ... 6: The first 7 alarms are displayed.
- Index 7: The most recent alarm is displayed.

A maximum of 56 alarms are displayed in the alarm history:

- Index 8: The most recent alarm is displayed.
- Index 9 ... 63: The first 55 alarms are displayed.

Properties of the alarm buffer/alarm history:

- The alarms in the alarm buffer are arranged from 7 to 0 according to the time that they occurred. In the alarm history, this is from 8 to 63.
- If 8 alarms have been entered in the alarm buffer, and a new alarm is received, the alarms that have been resolved are transferred to the alarm history.

- r2121 is incremented each time the alarm buffer changes.
- An alarm value (r2124) can be output for an alarm. The alarm value is used to diagnose the alarm more accurately; please refer to the alarm description for details of the meaning.

Clearing the alarm buffer, index [0...7]:

- The alarm buffer index [0...7] is reset as follows: p2111 = 0

10.32.6.3 Configuring messages

The properties of the faults and alarms in the drive system are permanently defined.

The following configuration settings can be made for some of the messages within a permanently defined framework for the drive system:

Change message type (example)

Select message	Set message type	
p2118[5] = 1001	p2119[5]	= 1: Fault (F)
		= 2: Alarm (A)
		= 3: No message (N)

Change fault response (example)

Select message	Set fault response	
p2100[3] = 1002	p2101[3]	= 0: None
		= 1: OFF1
		= 2: OFF2
		= 3: OFF3

Change acknowledgment (example)

Select message	Set acknowledgment	
p2126[4] = 1003	p2127[4]	= 1: POWER ON
		= 2: IMMEDIATE
		= 3: PULSE INHIBIT

Note

Only those messages which are listed in the indexed parameters can be changed as desired. All other messages retain their factory settings or are reset to the factory settings.

Examples:

- In the case of messages listed via p2128[0...19], the message type can be changed. The factory setting is set for all other messages.
- The fault response of fault F12345 has been changed via p2100[n]. The factory settings are to be restored.
  – p2100[n] = 0

Delay of the fault response
The fault response can be delayed by a parameterized time for all faults.
p51780 delay time (0.000 s .. .. 60.000 s), factory setting = 0.000 s
See also function diagram 2651.
The two CO/BOs r2139.3 (Fault active) and r3114.10 (Fault present) can be used by a

higher-level controller in order to detect the time when a fault occurs (Fault present) and the time when a fault takes effect (Fault active).

Triggering on messages (example)

Select message	Trigger signal
p2128[0] = 1001	BO: r2129.0
or	
p2128[1] = 1002	BO: r2129.1

Note

The value from CO: r2129 can be used as a group trigger.

CO: r2129 = 0 No selected message has been output.

CO: r2129 > 0 Group trigger.
At least one selected message has been output.
The individual binector outputs BO: r2129 should be investigated.

Triggering messages externally

If the appropriate binector input is interconnected with an input signal, fault 1, 2, or 3 or alarm 1, 2, or 3 can be triggered via an external input signal.

Once an external fault 1 to 3 has been triggered on the Control Unit drive object, this fault is also present on all associated drive objects. If one of these external faults is triggered on a different drive object, it is only present on that particular drive object.

BI: p2106	→ External fault 1	→ F07860(A)
BI: p2107	→ External fault 2	→ F07861(A)
BI: p2108	→ External fault 3	→ F07862(A)
BI: p2112	→ External alarm 1	→ A07850(F)
BI: p2116	→ External alarm 2	→ A07851(F)
BI: p2117	→ External alarm 3	→ A07852(F)

Note

An external fault or alarm is triggered by a 1/0 signal.

An external fault and alarm do not usually mean that an internal drive message has been generated. The cause of an external fault and warning should, therefore, be remedied outside the drive unit.

10.32.6.4 Parameters and function diagrams for faults and alarms

Function diagrams (see the SINAMICS DCM List Manual)

- 1710 Overview diagram – monitoring functions, faults, alarms
- 8060 Faults and alarms – fault buffer
- 8065 Faults and alarms – alarm buffer
- 8070 Faults and alarms – fault/alarm trigger word r2129
- 8075 Faults and alarms – fault/alarm configuration

Overview of important parameters (refer to the SINAMICS DCM List Manual)

- r0944 Counter for fault buffer changes
  ...
- p0952 Fault incident counter
- p2100[0...19] Fault code for fault reaction selection
  ...
- r2139 Status word for faults
- r3120[0...63] Component number fault
- r3121[0...63] Component number alarm
- r3122[0...63] Diagnostics attribute fault
- r3123[0...63] Diagnostics attribute alarm

10.32.6.5 Forwarding faults and alarms

Forwarding faults and alarms of the CU

When faults or alarms are triggered on the drive object of the CU, it is always assumed that central functions of the drive unit are involved. For this reason, these faults and alarms are not only signaled on the drive object of the CU, but are also forwarded to all other drive objects. The fault reaction affects the drive object of the CU and all other drive objects. This behavior also applies to the faults set in a DCC chart on the CU with the aid of DCB STM.

A fault that was set on the drive object of the CU must be acknowledged on all drive objects to which this fault was forwarded. In this way, the fault is then automatically acknowledged on the drive object of the CU. Alternatively, all faults of all drive objects can also be acknowledged on the CU.

If a set alarm is reset on the drive object of the CU, this alarm also disappears automatically on the other drive objects to which this alarm was forwarded.

Forwarding faults and alarms as a result of BICO interconnections

If two or more drive objects are connected via BICO interconnections, then faults and alarms from CU, TM31, TM15, TM17, and TM15DIDO drive objects are forwarded to DC_CTRL-type drive objects. Faults are not forwarded within these two groups of drive object types.

This behavior also applies to the faults set in a DCC chart on the previously named drive object types with the aid of DCB STM.

10.32.7 Simulation mode

Description

Electrical systems are to be subjected to extensive testing (correctness of wiring, etc.) prior to mounting and before each commissioning. In the case of converter systems, in which in DCM Control Module and a thyristor power unit (possibly re-used from an old system) are installed, this check is to be performed very carefully due to the complexity of the wiring.

The DCM Control Module offers simulation mode for support.

Simulation mode enables firing pulses to be transferred to specific individual thyristors only without the line voltage being present for the power unit.

Sequence of simulation mode

1. Selection of an individual thyristor with p51840.
   This results in the activation of simulation mode. However, this only happens in operating states ≥ o7.0. This means that during simulation mode the line contactor is opened and the power unit is not under voltage load.
   In all other operating states, p51840 is ineffective.
   If simulation mode is active, every 20 ms it outputs two firing pulses with intervals of 3.33 ms to the selected thyristor. The length setting of the pulse packet with p50079 (short pulse/long pulse) is considered here.
   While simulation mode is active, the DCM switches to operating state o8.1. As such, an ON command is ineffective during simulation mode.
2. Measurement of the firing current on the gate connection of the selected thyristor using current probe and oscilloscope.
3. End simulation mode with p51840 = 0.

By successively testing all thyristors, the following checks are possible:

- Correctness of wiring on firing pulse cables
- Correctness of set firing pulse chopping (see p51826)
- Correctness of firing current of the thyristors

Remarks on simulation mode

- Remark 1:
  Simulation mode is in principle also possible for a DCM DC Converter. However, there is no need for this there, as the corresponding tests have already been performed at the manufacturer's factory. Furthermore, the firing pulse cables are not accessible without impermissible intervention (opening cable ties).
- Remark 2:
  The thyristor diagnostics described in Chapter "Thyristor diagnostics (Page 607)" are not suitable for checking the electrical system following mounting. In the case of thyristor diagnostics, the line voltage must be present at the power unit. The wiring of the firing pulse cables is assumed to be correct.
  Thyristor diagnostics are intended to support troubleshooting in the case of unexplained fault messages or blown fuses which suggest the presence of defective thyristors (F60004, F60010, F60057, F60300, etc.).

10.33 CPU time load with SINAMICS DCM

The CPU time load of the SINAMICS DCM is indicated in r9976[1] of the drive object CU_DCM. The following rules always apply:

1. The cyclic DC closed loop control of the SINAMICS DCM generates a base load of approx. 70 % (r9976[1]).
2. The use of peripherals (AOP30, Starter, TM15, TM31, TM150, SMC10, SMC30, CBE20,...), certain settings in the closed-loop control and/or use of the free function blocks along with the DCC technology option increases this base load. The additional CPU time load as a result of the main components is summarized in the following table.
3. It is not permissible that the CPU time load (r9976[1]) exceeds 100 %.

⚠ WARNING

Exceeding the CPU time load

It is no longer ensured that the drive correctly functions for a CPU time load of >100 % in p9976[1].

- Ensure that the CPU time load remains below 100 %.

Note

When the time load of the CUD is too high (r9976[1] >100%), fault F60099 (in extreme cases F01205) is output (time slice overflow). In such a case, the drive needs to be switched off and then back on again (POWER OFF / POWER ON).

The CPU time load must be taken into consideration when configuring and commissioning the SINAMICS DCM.

Table 10-101 Additional CPU time load as a result of optional components

Component	Additional CPU time load
AOP30 via PPI	+4 %
1 TM31	+4 %
2 TM31	+5 %
3 TM31	+6 %
1 TM15	+1 %
2 TM15	+1.5 %
3 TM15	+2 %
1 TM150	+1 %
2 TM150	+1.5 %
3 TM150	+2 %
1 SMC10, SMC30	+2 %
1 CBE20	+1 %
Internal encoder (p50083 = 2)	+2 %
Parallel interface	+4 %
Peer-to-peer	+4 %
Calculating the thyristor blocking voltage	+4.5 %
Is supported by the CCP	+3.5 %
Memory card inserted	+1 %
Technology controller	+1.5 %
Free function blocks	Depending on the number of free function blocks being used and their runtime groups, see Chapter "Free function blocks (Page 633)"
DCC	Depending on the number of DCC blocks being used and their runtime groups, see Chapter "Drive Control Chart (DCC) (Page 635)"

Note

The additional CPU time load listed above for TM15, TM31 and TM150 apply for a sampling time of 4 ms (p4099 = 4000). Setting faster sampling rates in the TM modules increases the CPU time load in the SINAMICS DCM to values considerably higher than those stated previously.

Note

The stated computing rules are to be understood as support during configuring and commissioning. The theoretical CPU time load computed from these rules can deviate from the CPU time load actually measured on the r9976[1] by several percentage points.

10.33.1 Maximum configuration

The following configuration can be operated as the maximum on one CUD.

Table 10-102 Maximum configuration with SINAMICS DCM

Number	Component	Note
3	TM15, TM31, TM150	Connection of any combination of TM15, TM31 and TM150 modules on DRIVE-CLiQ. Connecting other TM modules (TM17, TM41, ...) as well as more than 3 TM modules is not permissible. Sampling in 4 ms cycle (p4099=4000). Faster sampling increases the CPU time load, and precludes operation of this maximum configuration
1	SMC10, SMC30	The connection of other (SMC20,..) and of more than 1 external encoder module is not permissible.
1	CBE20	The connection of other OMI modules (CBE10) is not permissible.
1	Pulse encoder evaluation	p0400 > 0
1	AOP30	
1	STARTER	Online
1	Parallel interface	Active
1	Peer-to-peer	Active

Note

The capacity of the SINAMICS DCM can be expanded by equipping the SINAMICS DCM with a 2nd CUD (right-hand mounting slot). See Chapter "Expanding the SINAMICS DCM to include a second CUD (Page 602)".

10.33.2 Computation examples

Example 1:

Project A is a single drive in a control cabinet. An AOP30 is located in the control cabinet door. The motor has a pulse encoder, which is connected through the pulse encoder input X177.41-48

Base load	70 %
AOP30	+4 %
Internal encoder	+2 %
Calculated CPU time load =	**76 %**

Approx. 24 % remain free for use by the free function blocks and/or DCC blocks.

Example 2:

Project B is a single drive connected to an S7 via PROFINET. 3 TM31 modules are used for terminal expansion. The sampling rates of the TM modules (p4099) are set to 4000 ms. In

addition, a configured DCC application in the drive is running, which comprises 50 blocks and runs in the 6 ms time slice.

Base load	70 %
CBE20	+1 %
3 × TM31 with p4099[1,2,3] = 500	+6 %
DCC application: 50 blocks @ 1 ms	+5 %
Calculated CPU time load =	**82 %**

The CUD is 82 % utilized.

Note

The available CPU time can be expanded by equipping the SINAMICS DCM with a 2nd CUD (right-hand mounting slot). See Chapter "Expanding the SINAMICS DCM to include a second CUD (Page 602)".

10.34 Free function blocks

A logic operation, which connects several states (e.g. access control, plant status) to a control signal (e.g. ON command), is required for controlling the drive system in a wide variety of applications.

Along with logic operations, a number of arithmetical operations and storing elements are becoming increasingly important in drive systems. This functionality is available as a "Free function blocks" function module (FBLOCKS) on the drive object type of the SINAMICS DCM.

General remarks

- Exact information on the scope of the blocks, about parameter assignment and about commissioning the free function blocks is available in the "SINAMICS" Free function blocks" manual. This chapter describes the special features of the free function blocks with SINAMICS DCM.
- This additional functionality increases the CPU time load. That means the maximum possible configuration with a Control Unit may be restricted.
- The free function blocks are restricted in their scope to 52 blocks per drive object (DO). Furthermore, the unassigned function blocks as compared to DCC cause a significantly higher CPU time load.
  If an application with free function blocks cannot be implemented, then the DCC technology option is available, see Chapter "Drive Control Chart (DCC) (Page 635)".

- In the SINAMICS DCM, simultaneous use of the free function blocks and the DCC technology option are feasible.
- With the SINAMICS DCM, parameters that specify scaled variables have the unit "Percent". With free function blocks, parameters that specify scaled variables have no dimension. When setting parameter values, the unit of the parameter must **always** be taken into account. The unit is specified in the List Manual and is displayed in STARTER and on the AOP30.
  Remark:
  The relationship between percent variables and dimensionless variables is 100% corresponds to 1.00.
  The conversion is performed according to the formula: Y=X/100%.
  X..percent variable
  Y..dimensionless variable
  Example: The fixed value r52401 is used as the input value of the limit monitor (p20266 = 52401). p50401 and r52401 both have the unit "%". If the value "50 %" is specified at p50401, the value "50 %" appears at r52401. The value "50%" (= 0.5) is therefore effective as the input signal X of the limit monitor. If a mean interval value of 50% is to be set, then p20267 = 0.5 must be set because parameter p20267 is dimensionless and the relationship 50% = 0.5 applies.

CPU time load through free function blocks with the SINAMICS DCM

Processing free function blocks requires considerable computation time. If little CPU time remains, you have to check whether all the activated function modules are required and whether all the function blocks used need to be computed within the same sampling time.

The CPU time load can be reduced by either deactivating function modules or assigning used function blocks to a runtime group with a longer sampling time.

Table 10-103 CPU time load through free function blocks with the SINAMICS DCM

Time slice	Number of free function blocks	CPU time load
16 ms	52	+30 %
8 ms	23	+30 %
5 ms	12	+30 %
4 ms	6	+30 %
2 ms	3	+30 %

Notes regarding the CPU time

- The actual CPU time load of the CUD can be read out in r9976. Please refer to the Chapter "CPU time load with SINAMICS DCM (Page 630)" for more information about the CPU load on the SINAMICS DCM.
- To make your own calculations, the illustrated CPU time loads can be taken to be "linear". This means that:
  - half as many blocks in the same time slice generate half as much CPU time load, etc.
  - the same number of blocks in time slices half as fast generate half as much CPU time load, etc.
- Each individual free function block can be assigned to a runtime group via parameter (e.g. p20032). Ten runtime groups are available. Every runtime group can be assigned a time slice using p20000.
  - The time slices that can be selected with p20000 = 1 to 1096 are calculated asynchronously to the closed-loop control functions.
  - The time slice that can be selected with p20000 = 9003 is that time slice, in which the setpoint channel (function diagrams 3105 to 3155) is calculated. One of the free function blocks assigned to this time slice is immediately calculated before the functions of the setpoint channel.

10.35 Drive Control Chart (DCC)

For complex applications that cannot be implemented with the free function blocks, the DCC technology option is available. With DCC, a function diagram can be graphically created, which comprises elementary function blocks that are interconnected with one another, and which can then be loaded into the SINAMICS DCM.

The following steps are required to implement an executable DCC control with the SINAMICS DCM:

1. Installation of STARTER and a DCC license on the PC
2. Loading the DCC technology option on to the memory (ROM) in the drive unit.
3. Configuring a DCC chart on the PC (DCC editor)
4. Compile the DCC chart on the PC and load it to the drive

Information

- Detailed information on the function blocks is contained in the "SINAMICS SIMOTION Function Manual DCC Block Description" as well as in the "SINAMICS SIMOTION Programming Manual DCC Editor". This chapter describes the special features of the DCC technology option with SINAMICS DCM.
- Simultaneous use of the free function blocks and the DCC technology option are feasible.

- This additional functionality through DCC increases the CPU time load. That means the maximum possible configuration with a Control Unit may be restricted.
- Before you load a STARTER project with DCC chart into the drive, you must load the DCC technology option into the memory of the drive unit (see the following Chapter). If you attempt to load a DCC chart into the drive, although the DCC technology option is not available in the drive, then the drive signals a fault.
  To eliminate this fault, you have the following options:

1.	Now install the DCC technology option as described in the following Chapter. Then, carry out a POWER OFF / ON. Now load the STARTER project including the DCC chart into the drive.
2.	Delete the DCC chart from the STARTER project and load the project into the drive without DCC chart.
3.	Carry out a "Restore factory settings".
4.	Carry out a POWER OFF / ON.

10.35.1 Loading the DCC technology option into the drive unit memory

Loading the DCC technology option into the drive unit is usually performed with STARTER and with the SINAMICS DCM takes about 10 min. During this process, the entire DCB library with a scope of approx. 2 MB data is transferred to the drive.

To avoid problems associated with an inserted/uninserted memory card before or during online loading, the SINAMICS DCM supports an alternative option for transferring the DCB library to the drive.

- **Step 1**
  In STARTER, open a project that includes a SINAMICS DCM with at least one DCC chart. In the shortcut menu (right mouse button), select "Load into file system" (only possible in the offline mode).

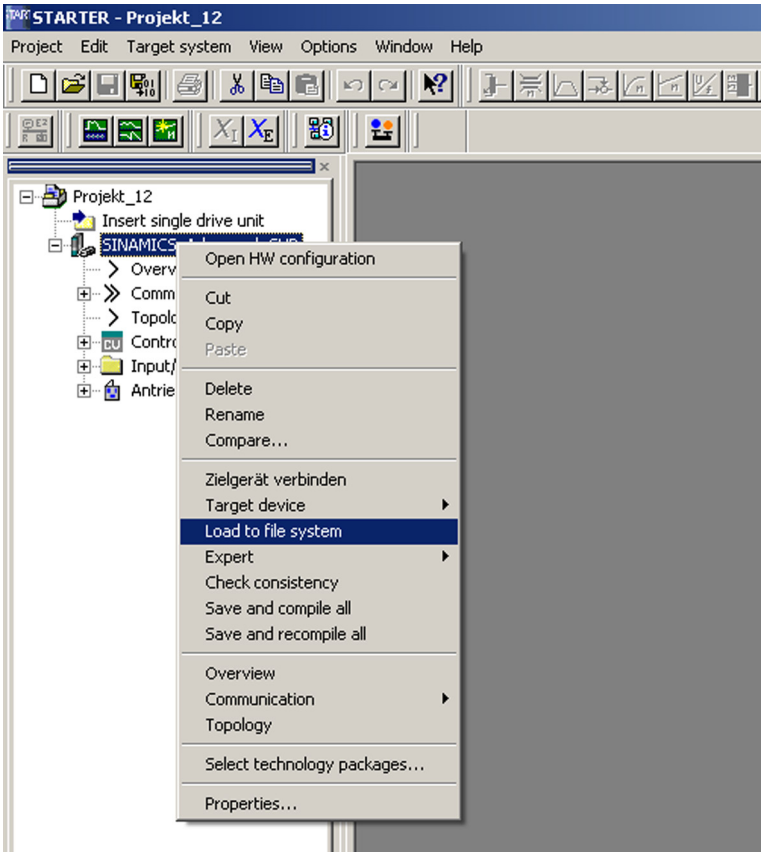

Figure 10-104 Loading into the file system

- **Step 2**
  A dialog, "Load into file system", opens. Choose "Select target" and select an empty folder on a local hard drive.
- **Step 3**
  After a folder has been selected, STARTER copies the DCB library into this local folder. 2 folders named "OEM" and "USER" are created.

- **Step 4**
  Copy the OEM folder to an empty memory card.

  Note

  The memory card supplied from Siemens as option S01 or S02 includes, when supplied, a dump of the internal device firmware. These files are only required to update firmware.

  These files can be deleted for all other applications of the memory card. Copy the files into a local folder of your PG/PC and delete the files on the memory card, before you use the card for the functions described in this chapter.

- **Step 5**
  Insert the CompactFlash Card into the switched-off drive and switch on (POWER ON). The DCB library is copied into the non-volatile memory (ROM) in the drive during power-up. The process is complete as soon as the power-up has ended (operating state 7.0 reached).
- **Step 6**
  Switch device off/on (POWER OFF / POWER ON). After the new power-up, the DCC is ready.
- Repeat **steps 5 and 6** on additional SINAMICS DCM drives.

Note

If DCC is installed in the drive, the power-up time increases by approx. 10 s.

Note

This procedure does **not** transfer the STARTER parameter assignments into the unit. In order to transfer the parameter assignments from STARTER into the drive, the "Load into the target system" function must be run in STARTER.

10.35.2 CPU time load through DCC

Calculating the DCC blocks requires CPU time. If the CPU time becomes meager, you have to check whether all the activated blocks are required and whether all the function blocks used need to be computed within the same sampling time.

The CPU time load can be reduced by either deactivating blocks or assigning used blocks to a runtime group with a longer sampling time.

A list of all of the DCC blocks available for SINAMICS DCM and the required computation times are listed in Appendix B.

Table 10-104 CPU time load DCC blocks left-hand CUD.

Time slice	Number of blocks [1)]	CPU time load
1 ms	50	+30%
2 ms	100	+30%
4 ms	200	+30%
6 ms	300	+30%

Time slice	Number of blocks [1]	CPU time load
8 ms	400	+30%
16 ms	800	+30%

[1] This information applies to a left-hand CUD without additional options. These options increase the basic load of the CUD and reduce the available CPU time for the DCC blocks. Please refer to the "CPU time load with the SINAMICS DCM" chapter for more information about the CPU load.

In this information, an average complexity of the blocks being used is assumed. If only highly complex or very simple blocks are computed, the stated limit shifts accordingly.

Notes

- The actual CPU time load of the CUD can be read out in r9976. Please refer to the "CPU time load with SINAMICS DCM (Page 630)" chapter for more information about the CPU load on the SINAMICS DCM.
- To make your own calculations, the previously illustrated CPU time loads can be taken to be "linear". This means that:
  - half as many blocks in the same time slice generate half as much CPU time load, etc.
  - the same number of blocks in time slices half as fast generate half as much CPU time load, etc.

Examples

1. In the 1 ms time slice, 50 blocks generate about 30 % additional CPU time load. For that reason, 50 blocks in the 2 ms time slice generate about 30 % × 0.5 = 15 % additional CPU time load.
2. In the 7 ms time slice, (300 + 400) / 2 = 350 blocks generate about 30 % additional CPU time load. That means 250 blocks generate 250 / 350 × 30 % = 21.5 % additional CPU time load.

10.35.3 Memory load through DCC

Along with the CPU time load, the memory load of the processor must also be considered when designing a closed-loop control with the DCC technology option. A higher number of configured DCC blocks and @parameters also more highly loads the internal memory (ROM) of the CUD.

For using DCC, on the SINAMICS DCM, as compared with the maximum possible configurations documented in the "Maximum configuration" chapter, depending on the size of the diagram, one must omit optional components. The number of blocks and the @parameters are decisive.

For one CUD without additional options, the following rules apply.

Table 10-105 Maximum number of DCC blocks and @parameters

Drive object	Number of DCC blocks and @parameters
CU_DC	800
DC_CTRL	600

Note

The specified maximum numbers for blocks and @parameters always apply for the entire drive unit and should be regarded as guide values. The CUD is completely utilized with 800 DCC blocks and @parameters on the DO CU_DC or 600 DCC blocks and @parameters on the DO DC_CTRL. Conserving @parameters has little effect on the quantity structure of the blocks; the specified maximum numbers for the blocks should therefore not be exceeded.

On the DO DC_CTRL, due to the large number of drive parameters, fewer DCC blocks can be computed than on the DO CU_DC.

In addition, the memory is loaded by optional components as follows:

Table 10-106 Additional memory load through optional components

Component	Additional memory load (expressed in DCC blocks)
AOP30	- 200 blocks
TM31	- 150 blocks
TM15	- 150 blocks
TM150	- 150 blocks
SMC10, SMC30	- 25 blocks
CBE20	- 25 blocks

The final limits are determined by the total memory available on the CUD. If the previously-mentioned recommended maximum limits are exceeded, this can result in errors during upload or download (e.g. fault F1105: CU memory insufficient) and the drive can no longer be switched on; POWER OFF/ON must be performed on the drive unit.

Sample calculation:

The SINAMICS DM is equipped with one AOP30 and two TM31 modules. The DCC diagram is to be computed on the DO DC_CTRL.

→ 600 – 200 – 2×150 = 100 DCC blocks can be computed on the DO DC_CTRL.

Notes:

- If there is insufficient memory on the CUD for the configuration of the desired DCC diagram, the scope of the blocks needs to be reduced or the SINAMICS DCM needs to be equipped with a 2nd CUD inserted in the right-hand slot.
- The computation rules stated previously also apply to the CUD on the right-hand slot.
- In most cases, the CPU time load of the CUD becomes the limiting factor when designing the DCC application and not the memory load.

10.35.4 Backing up the DCC diagrams

A DCC project comprises two parts.

1. Information about the type, time slices and interconnection of the DCB blocks
2. Information about the layout and graphics in the DCC charts

When downloading the DCC chart to the drive (download to the target system), only the information about the type, time slices and interconnection of the DCB blocks (Point 1) are downloaded to the drive.

The DCC charts can also be saved in the target device by selecting the option “Store additional data on the target device”. This is recommended if the DCC charts will also be opened by another PG.
A further prompt appears after selecting the "Download to Target System" window. The DCC charts are also saved when both checkboxes are activated.

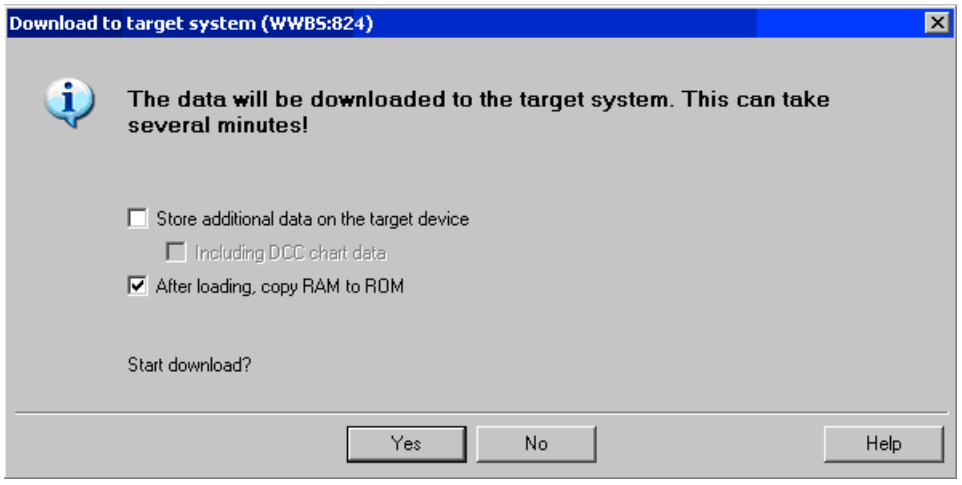

The following prompt appears when selecting "Load to PG" later:

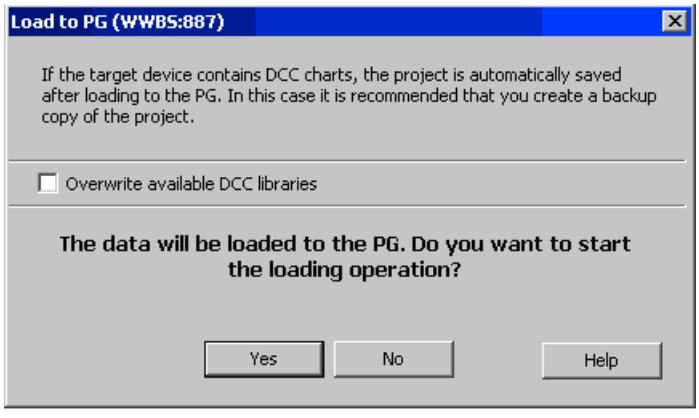

If the checkbox is activated, the DCC charts in the project are overwritten by those in the target device.

The information about layout and graphics in the DCC charts (Point 2) is still available in the STARTER project.

10.36 Write and know-how protection

In order to protect your own projects against changes, unauthorized viewing or copying, the "Write protection" and "Know-how protection" (KHP) functions are available.

Protection	Validity	Objective	Effect
Write protection	Online	Protection of the parameterization against inadvertent changes by the user.	p-parameters can be read, but cannot be written.
Know-how protection	Online	Protection of intellectual property, especially the know-how of the machine manufacturers, against unauthorized use or reproduction of their products.	p-parameters can neither be read nor written.

10.36.1 Write protection

Write protection prevents settings from being inadvertently changed. No password is required for write protection.

Setting up and activating write protection

1. Connect the Control Unit to the programming device.
2. Call STARTER.
3. Download your project.
4. Establish a connection to the target device.

5. Select the required drive unit in the project navigator of your STARTER project.
6. Call the shortcut menu "Write protection drive unit > Activate".

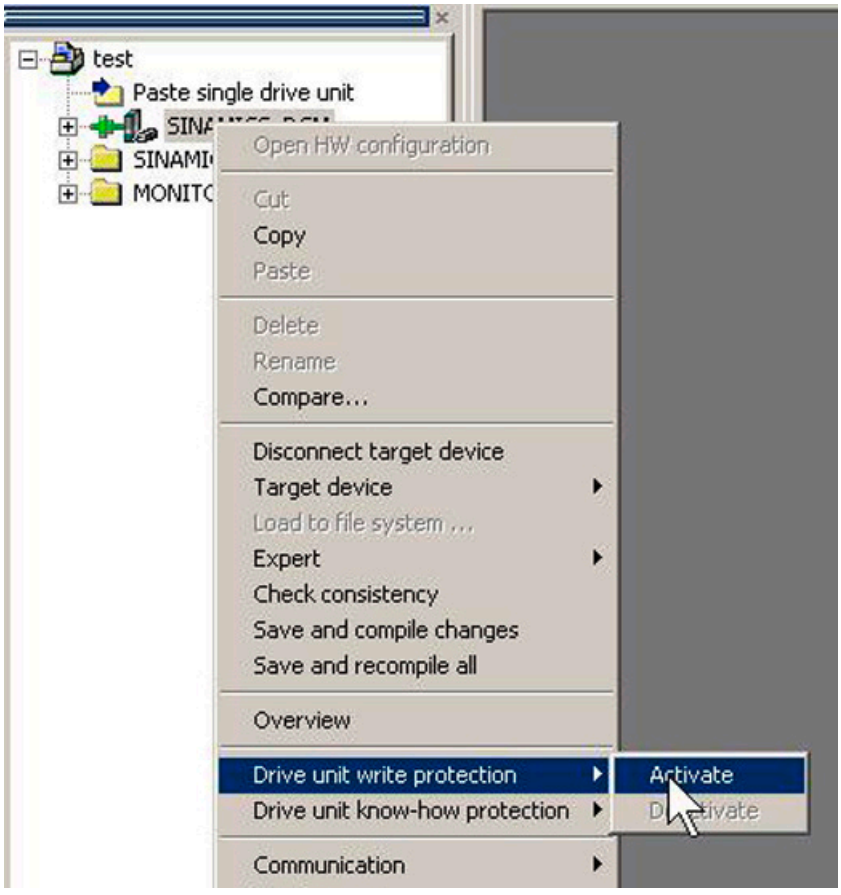

Figure 10-105 Activating write protection

Write protection is now activated. In the expert list you can recognize that write protection is active by the fact that the entry fields of all adjustable parameters are shown with gray shading.
In order to permanently transfer your setting, after changing write protection, you must carry out the "RAM to ROM" data save operation.

Note

Know-how protection with active write protection

If write protection is active, the know-how protection setting cannot be changed.

Note

Access via fieldbus

Per default, in spite of write protection, parameters can be changed via fieldbusses with acyclic access. If write protection should also be active for access operations via fieldbusses, then in the expert list, you must set p7762 to 1.

Deactivating write protection

1. Connect the Control Unit to the programming device.
2. Call STARTER.
3. Download your project.
4. Establish a connection to the target device.
5. Select the required drive unit in the project navigator of your STARTER project.
6. Call the shortcut menu "Write protection drive unit > Deactivate".
   The hatching in the expert list disappears after deactivation. The parameters can be set again.

Parameters without write protection

Certain parameters are excluded from the write protection in order not to restrict the functionality and operability of the drives. The list of these parameters can be found in the SINAMICS DCM List Manual in Chapter "Parameters for write protection and know-how protection", Section "Parameters with WRITE_NO_LOCK".

The "Restore factory settings" function can also be used when write protection is activated.

10.36.2 Know-how protection

The "Know-how protection" function prevents, for example, confidential company know-how for configuration and parameter assignment from being read by unauthorized persons.

The know-how protection requires a password. The password must comprise at least 1 and a maximum of 30 characters.

Note

Password security

You are responsible for the security of your password. Whenever possible, use a password with sufficient length (min. eight characters); use upper- and lower-case letters and special characters.

The know-how protection is a pure online function. Therefore, establish a direct connection to the Control Unit before setting the password.

Characteristics when know-how protection is activated

- Except for a small number of system parameters and the parameters specified in an exception list, all other parameters are locked. In the expert list, the value of these parameters cannot be read or changed.
- In the expert list of STARTER, the text "Know-how protected" is displayed for the locked parameters instead of the parameter values.

- Know-how protected parameters of the expert list can be hidden in the "Online value of the Control Unit" drop-down list via the entry "Without know-how protection".
- The values of display parameters remain visible.
- The contents of screen forms are not displayed when know-how protection is active.
- Know-how protection can be combined with copy protection.

Functions locked using know-how protection

The following listed functions are inhibited when know-how protection is active:

- Download
- Trace function
- Function generator
- Deleting the alarm history
- Creating acceptance documentation

Functions that can only be partly executed with know-how protection

The following listed functions can only be partly executed when know-how protection is active:

- Displaying the topology (actual topology only)
- Upload (restricted scope; see Chapter "OEM exception list (Page 647)")

Functions that can be executed for know-how protection

The following listed functions can still be executed despite of the fact that know-how protection is activated:

- Restoring factory settings
- Acknowledging alarms
- Displaying alarms and warnings
- Displaying the alarm history
- Reading out the diagnostic buffer
- Switching over to the control panel (fetch the master control, all the buttons and setting parameters)
- Displaying created acceptance documentation

Parameters that can be changed when know-how protection is active

In spite of active know-how protection, certain parameters can be changed and read. The list of these parameters can be found in the SINAMICS DCM List Manual in Chapter "Parameters for write protection and know-how protection", Section "Parameters with KHP_WRITE_NO_LOCK".

Parameters that can be read when know-how protection is active

In spite of know-how protection being active, additional parameters can be read, but are locked against changes. The list of these parameters can be found in the SINAMICS DCM List Manual in Chapter "Parameters for write protection and know-how protection", in Section "Parameters with KHP_ACTIVE_READ".

Note

Password check for know-how protection

Please note that if the language settings are changed in Microsoft Windows, after activating know-how protection, errors can occur when subsequently checking the password. If you use language-specific special characters, you must ensure that the same language setting is active on the computer for subsequent entry of the password.

Note

Data security of the memory card

After setting up and activating the know-how protection, for encrypted data backup on the memory card, previously backed up, non-encrypted data of the SINAMICS firmware will be deleted. This is the standard deletion procedure, in which only the entries on the memory card are deleted. The data itself is still available and can be reconstructed.

To ensure know-how protection, we recommend the use of a new empty memory card. If you cannot obtain a new memory card in the short term, you should delete all safety-related data on the current memory card.

To completely delete your previous data on the memory card, you must reliably delete this data using a suitable PC tool before activating know-how protection. The data is located on the memory card in the "\\USER\SINAMICS\DATA" directory.

Note

Diagnostics under know-how protection

If service or diagnostics is to be performed when know-how protection is active, then Siemens can only provide support in collaboration with the OEM partner.

10.36.2.1 Copy protection

Features of the activated copy protection

Copy protection prevents project settings from being copied and transferred to other Control Units.

Additional features include:

- Copy protection can only be activated in conjunction with the know-how protection (see Chapter "Activating know-how protection (Page 648)").
- When copy protection is activated, the memory card and Control Unit are connected with one another and only function together.

- The copy protection prevents the use of each memory card with copied data of one Control Unit in another Control Unit.
- With the exception of the DCC library, the copy-protected data on the memory card cannot be read or copied. If a copied memory card is used, a copy protection error is displayed and a pulse inhibit set.

10.36.2.2 Configuring know-how protection

Requirements

Before activating know-how protection, the following conditions must be met:

- The drive unit has been fully commissioned.
  (Configuration, download into the drive unit, complete commissioning. You have then carried out an upload in order to upload the parameters calculated by the drive into the STARTER project.)
- The OEM exception list has been created (see below).
- To guarantee know-how protection, you must ensure that the project does not remain at the end user as a file.

Creating the OEM exception list

Before activating the know-how protection, enter the parameters in this exception list that are to remain readable and writable despite the know-how protection. The exception list can only be created via the expert list. The exception list has no influence on the input screen forms in STARTER.

Factory setting for the exception list:

- p7763 = 1 (exception list contains precisely one parameter)
- p7764[0] = 7766 (parameter number for entering the password)

Procedure

1. Use parameter p7763 to define the required number of parameters for the exception list.
   You can enter a maximum of 500 parameters in the exception list.
2. Execute the "Load to PG" function.
   Parameter p7764 is adapted in the expert list according to the setting in p7763. Indices are inserted or deleted depending on the setting.
3. In parameter p7764[0...n], assign the individual indices of p7763 to the required parameter numbers.
4. Transfer the changes to the Control Unit so that they can become effective.

Note

Parameters of the exception list are not checked

The Control Unit does not check which parameters you include or delete in the exception list.

Absolute know-how protection

By removing parameter p7766 from the exception list of p7764[0] = 0, you prevent any access at all to the data of the Control Unit and your project settings. It is then impossible to read or change the protected data. The know-how protection and the copy protection can no longer be canceled or deactivated.

Activating know-how protection

1. Connect the Control Unit to the programming device.
2. Call STARTER.
3. Open your project.
4. Establish a connection to the target device.
5. Select the required drive unit in the project navigator of your STARTER project.
6. In the shortcut menu, select "Drive unit know-how protection > Activate".
   The "Activate Know-how Protection for Drive Object" dialog box opens.

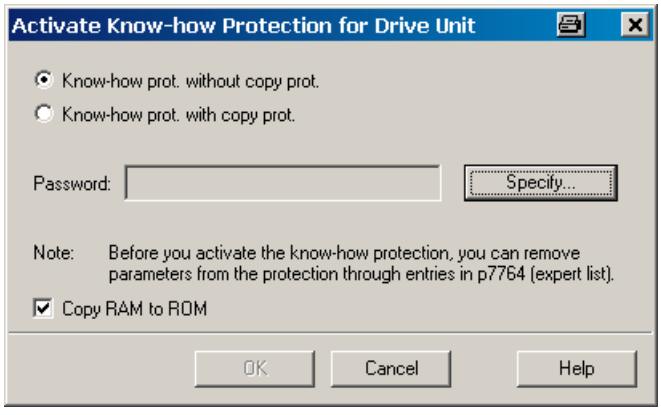

Figure 10-106 Activating

   The "Know-how protection without copy protection" option is active by default.

7. If you want to activate the copy protection in addition to know-how protection, click the "Know-how protection with copy protection" option.
8. Click "Specify".
   The "Know-how Protection for Drive Object - Specify Password" dialog box opens.

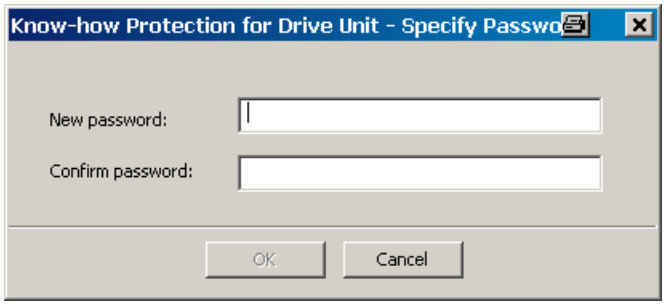

Figure 10-107 Setting the password

9. In the "New password" field, enter the password (1 to 30 characters). Pay attention to upper- and lower-case.
10. Enter it again in the "Confirm password" field and click "OK" to confirm the entry.
    The dialog box is closed and the password is shown in encrypted form in the "Activate Know-how Protection for Drive Object" dialog box.
    The "Copy RAM to ROM" option is active by default and ensures that the know-how protection is permanently stored in the Control Unit. If you only want to activate the know-how protection temporarily, you can deactivate this option.
11. Then click "OK".
    Know-how protection is now activated. The text "Know-how protected" is in all protected parameters of the expert list instead of the content.

Deactivating know-how protection

1. Connect the Control Unit to the programming device.
2. Call STARTER.
3. Open your project.
4. Establish a connection to the target device.
5. Select the required drive unit in the project navigator of your STARTER project.
6. In the shortcut menu, select "Drive unit know-how protection > Deactivate"
   The "Deactivate Know-how Protection for Drive Unit" dialog box opens.

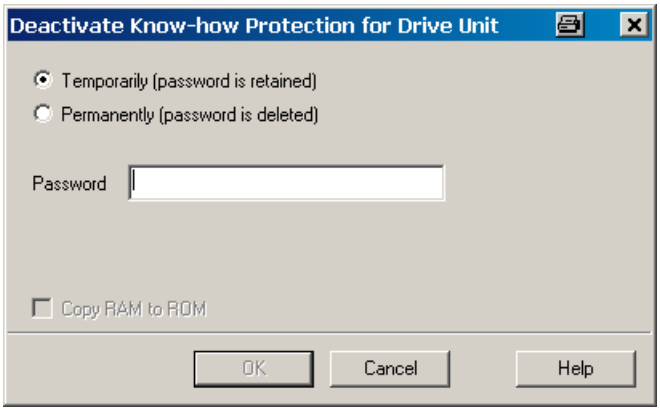

Figure 10-108 Deactivating

7. Select whether you want to deactivate the know-how protection "Temporarily" or "Permanently" by clicking the corresponding checkbox.
   - "Temporarily" deactivating: Know-how protection is active again after switching off and switching on.
   - "Permanently" deactivating: Know-how protection remains deactivated even after switching off and switching on again.

   If you select "Permanently", you can also carry out a data backup on the Control Unit with "Copy RAM to ROM". The checkbox with the same name is active in this case and is automatically activated. If you deactivate this checkbox, you must perform a manual "RAM to ROM" data backup later if the know-how protection remains deactivated after switching off and on.
8. Enter your password, and click "OK".
   Know-how protection is now deactivated. The values of all parameters are displayed again in the expert list.

Changing the password

A password can only be changed when know-how protection is activated.

To change the password for the know-how protection, proceed as follows:

1. Connect the Control Unit to the programming device.
2. Call STARTER.
3. Open your project.
4. Select the required drive unit in the project navigator of your STARTER project.
5. Call the shortcut menu "Drive unit know-how protection > Change password".
   The "Change Password" dialog box opens.

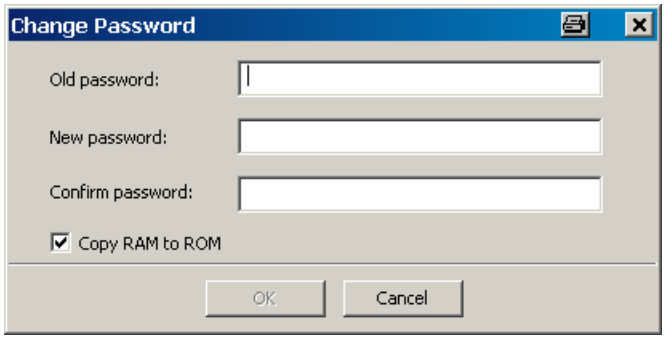

Figure 10-109 Changing the password

6. Enter your old password in the uppermost text box.
7. Enter your new password in the following text box and repeat it in the lowest text box.
   The "Copy RAM to ROM" option is active by default and ensures that the new password for the know-how protection is permanently stored in the Control Unit. If you only want to change the password temporarily, you can deactivate this option.
8. Click "OK" to close the dialog box.
   Once the password has been changed successfully, you will receive a confirmation.

10.36.2.3 Loading know-how protected data to the file system

Data with know-how protection can be directly loaded or saved to the file system from the drive unit. The activated know-how protection ensures that the data cannot be forwarded to unauthorized third parties.

The following applications are conceivable at the end user:

- Adaptations of encrypted SINAMICS data are required.
- The memory card is defective.
- The Control Unit of the drive is defective.

In these cases, the OEM can create a new encrypted subproject (for a drive object) via STARTER. The serial number of a new memory card or a new Control Unit is saved in this encrypted data record in advance.

Application example: Control Unit is defective

Scenario:

The Control Unit of an end user is defective. The machine manufacturer (OEM) has the end user's STARTER project files of the machine.

Sequence:

1. The end user sends the OEM the serial numbers of the new Control Unit (r7758) and the new memory card (r7843), and specifies the machine in which the Control Unit is installed.
2. The OEM loads the STARTER project data of the end user.
3. The OEM performs the STARTER function "Load to file system" (see Chapter “Save data to the file system (Page 651)”).
   – The OEM specifies whether the data is to be stored zipped or unzipped.
   – The OEM makes the required know-how protection settings.
   – The OEM enters the serial numbers of the memory card and the new Control Unit.
4. The OEM sends the stored data to the end user (e.g. by e-mail).
5. The end user copies the "User" directory to the new memory card and inserts it into the new Control Unit.
6. The end user switches on the drive.
   When powering up, the Control Unit checks the new serial numbers and deletes the values p7759 and p7769 if they match.
   After it has powered-up without any errors, the Control Unit is ready for operation. The know-how protection is active.
   If the serial numbers do not match, then fault F13100 is output.
   If required, the end user must re-enter the changed parameters from the OEM exception lists.

Calling the "Load to File System" dialog box

1. Call STARTER.
2. Open the required project.

3. Select the required drive unit in the project navigator of your STARTER project.
4. Call the "Load to file system" function.
   The "Load to File System" dialog box opens.

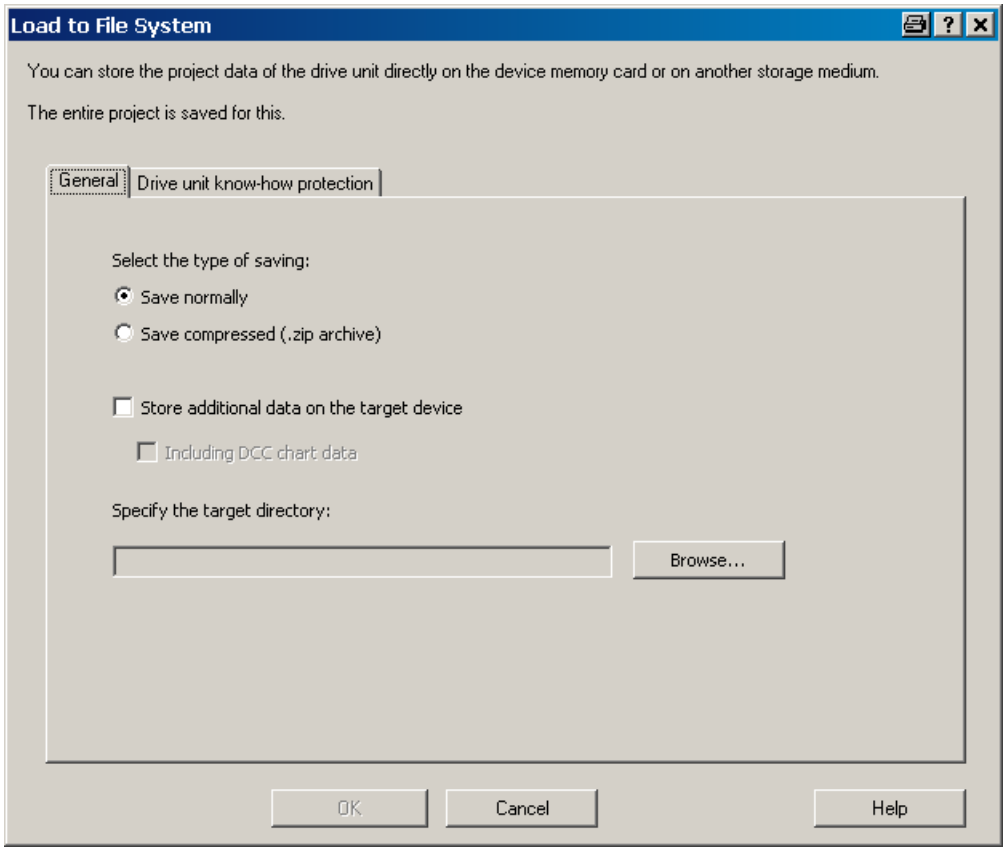

Figure 10-110 Load to file system (default setting)

Specifying the general memory data

The "General" tab is displayed automatically when the dialog is called. The "Save normally" option is activated by default.

1. If you want to save the data in compressed form, click the "Save compressed (.zip archive)" option button.
   The "Store additional data on the target device" option is deactivated in the default setting.
2. If you want to store additional data, such as program sources, on the target device, activate this option.
   Optionally you can also activate "Including DCC chart data". Graphical chart data can then also be stored.
3. Then enter the path for the storage directory in the appropriate input field, or click "Browse" and select the directory in your file system.

Configuring know-how protection

Make the settings for the know-how protection on the "Drive unit know-how protection" tab.

1. Click the "Drive unit know-how protection" tab.

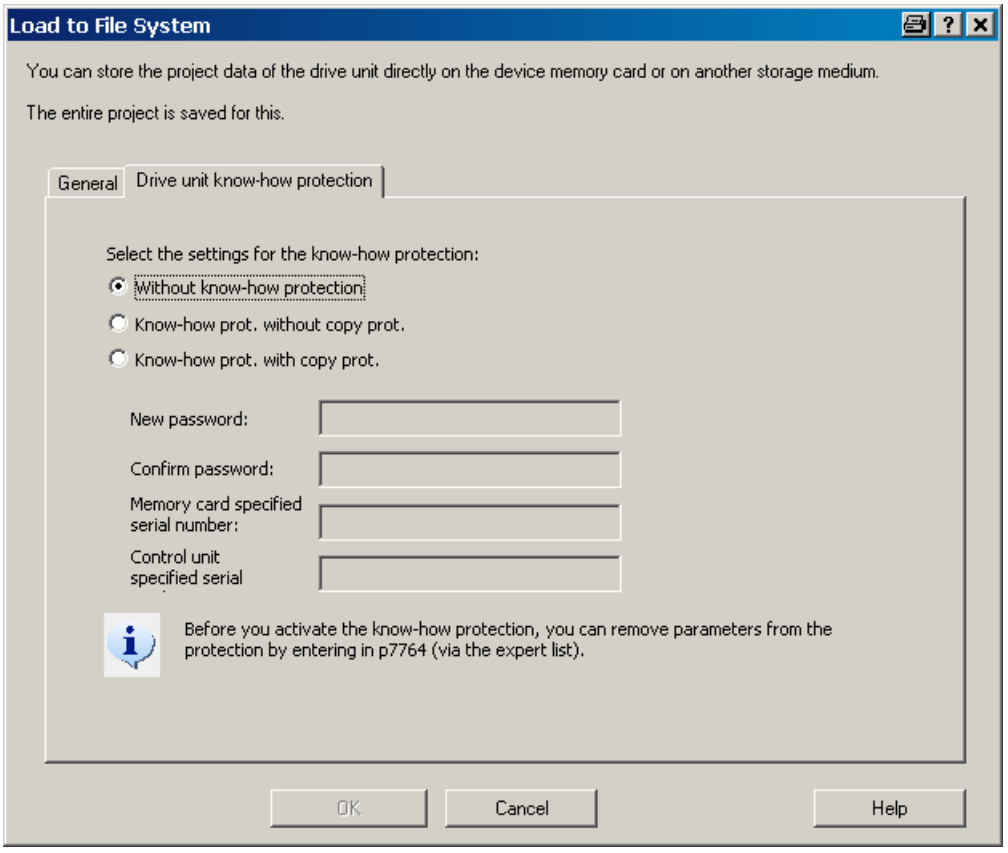

Figure 10-111 Load to file system know-how protection

By default, the "Without know-how protection" option is active. If you really want to store the data without protection (not recommended), you can exit the dialog box with "OK" or "Cancel" at this point.

2. If you want to save with protection, activate the "Know-how protection without copy protection" or "Know-how protection with copy protection" option.

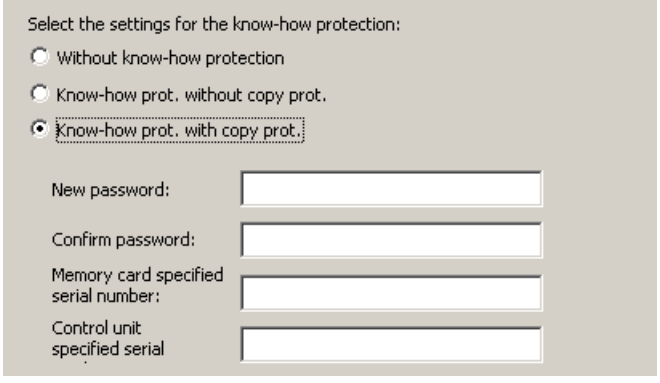

Figure 10-112 Activating load to file system know-how protection

The input fields are then active. Without copy protection, only the input fields for password input are active. With copy protection, the two input fields for the serial number are also active. Generally, the entries in the input fields are shown in encrypted form.

3. Enter the required password in the "New password" field and enter it again in the "Confirm password" field.
4. Enter the serial number of the new memory card for which the data is intended.
   If you have selected the "Know-how protection with copy protection" option, the input of the Control Unit serial number is also obligatory.
5. In this case, also enter the serial number of the Control Unit in the appropriate input field.
6. Click "OK" to confirm the settings you made.

Result

The data of the subproject is stored in the required encryption in your file system. With the aid of this encrypted data, an end user can install a new memory card or Control Unit for the drive unit.

10.36.3 Overview of important parameters

Overview of important parameters (see SINAMICS DCM List Manual)

- r7758[0...19] KHP Control Unit serial number
- p7759[0...19] KHP Control Unit reference serial number
- r7760 Write protection / know-how protection status
- p7761 Write protection
- p7762 Write protection multi-master fieldbus system access behavior
- p7763 KHP OEM exception list number of indices for p7764
- p7764[0...n] KHP OEM exception list
- p7765 KHP memory card copy protection
- p7766[0...29] KHP password input
- p7767[0...29] KHP password new
- p7768[0...29] KHP password confirmation
- p7769[0...20] KHP memory card reference serial number
- r7843[0...20] Memory card serial number

Maintenance 11

⚠ WARNING

Not observing fundamental safety instructions and residual risks

The non-observance of the fundamental safety instructions and residual risks stated in Chapter 1 can result in accidents with severe injuries or death.

- Adhere to the fundamental safety instructions.
- When assessing the risk, take into account remaining risks.

The SINAMICS DCM Control Module must be provided with extensive protection measures against contamination in order to prevent voltage flashovers and, therefore, destruction. Dust and foreign bodies must be thoroughly removed at given intervals depending on the level of soiling and certainly at least once every 12 months. The unit must be blown out with dry compressed air at a maximum of 1 bar, or cleaned using a vacuum cleaner.

The screw connections (also the protective conductor connections) must be retightened each time that the SINAMICS DCM Control Modules are maintained.

11.1 Upgrading the device firmware

This chapter describes how you can upgrade a drive – including STARTER project – from one firmware version to a higher firmware version (e.g. V1.1 to V1.2).

Basic information

The following steps are necessary:

- Upgrading the device firmware
  - Step 1: Backup the configuration
  - Step 2: Firmware update of the drive (incl. I/O)
  - Step 3: Update the STARTER project
  - Step 4: Load into the target system, RAM to ROM
- Upgrade the DCC technology option (optional)
  - Step 5: Update the DCC technology option (DCBLIB) and the DCC charts
  - Step 6: Load into the target system, RAM to ROM

Note

A memory card is required for the firmware update (see Chapter "Ordering information for options and accessories (Page 32)").

When updating the firmware, always proceed as follows:

1. Firmware update of the drive
   - Insert the memory, then switch the electronic power supply OFF and ON again. The device firmware is now installed.
   - Switch the electronic power supply OFF and ON again. The device firmware just installed now powers up.
     If neither a CBE20 nor DRIVE-CLiQ components are available, the drive is ready for operation.
     However, if a CBE20 or DRIVE-CLiQ components or both are available, the firmware of these components is updated during the power-up of the device firmware. At the end of the power-up of the device firmware, the DRIVE-CLiQ components indicate that a restart is required through flashing red LEDs. Alarm A1006 also appears. Switch the electronic power supply OFF and ON again a third time.
   - If only a CBE20 is connected, there is no indication after the second OFF and ON that the CBE20 also requires a restart so that the CBE20 firmware installed in the previous step is also started. However, a third OFF and ON of the electronic power supply is also required in this case.
2. Update the STARTER project
3. Load the converted STARTER project to the drive (load to the target device)

Do not proceed as follows:

1. Firmware update of the drive
2. Create a NEW STARTER project
3. Load into the PG

In this case, under certain circumstances, STARTER cannot assign the project to the correct drive version. If the STARTER project is not available, generate a new project with the old device version (load into the PG before the firmware update) and then proceed as normal.

11.1.1 Upgrading the device firmware

Note

Hardware/firmware compatibility

The hardware version of the Control Unit (CUD) must be taken into account when updating the device firmware. See the table below.

The hardware version can be read from the label on the right-hand side of the CUD.

CUD (print on label)	Executable firmware versions
C98043-A7100-**L1**-... C98043-A7100-**L2**-... C98043-A7100-**L100**-... C98043-A7100-**L200**-...	1.1, 1.2, 1.3
C98043-A7100-**L3**-... C98043-A7100-**L4**-... C98043-A7100-**L103**-... C98043-A7100-**L204**-...	All versions
A5E...	All versions

Step 1: Backup the configuration

The drive parameter assignment is not lost while updating the firmware. Nevertheless, before starting the firmware update, back up the drive configuration:

- Backup the parameter assignment on a memory card (see Chapter "Functions of the memory card") and/or
- Backup the parameter assignment in a STARTER project (see Chapter “Commissioning with the STARTER commissioning tool (Page 259)”)

Step 2: Firmware update of the drive

Notes:

Only those memory cards that Siemens has prepared for these systems are accepted.
If the memory card is formatted, then this must always be realized with the FAT16 setting.
Download the current firmware version: See preface

Procedure:

1. Unzip the *.zip file to an empty memory card
2. Insert the card in the drive, which has been switched-off, and switch the device on again. A firmware update is being performed. The update has been completed if the RDY-LED and the DP1-LED flash at 0.5 Hz (the update takes about 12 min).

3. Carry out a POWER OFF. Remove the memory card from the drive.

NOTICE
Removing the memory card before POWER ON If the memory card is not removed from the drive before the POWER ON, the parameterization in the drive is copied to the memory card when running up, or a parameterization already on the card copied to the drive. For a detailed description of this function, see Chapter "Memory card functions (Page 329)", Section "Copying parameter data sets from non-volatile memory to the memory card".

4. Carry out a POWER ON. The new firmware is now active.
   If a memory card is already in the drive, the following mechanism described in Chapter "Memory card functions (Page 329)", Section "Copying parameter data sets from non-volatile memory to the memory card" takes effect.
   - The connected TM modules and/or SMC10 or SMC30 carry out a firmware update when running up for the first time.
     After the firmware update of these components, it is necessary to carry out a POWER OFF / POWER ON for these components. The memory card no longer needs to be inserted for this step.
   - An optionally connected AOP30 indicates that new AOP firmware is available. Confirm the prompt after the update with "OK".

Note

As a result of the device firmware update, DCC charts in the device are not automatically upgraded to the new DCC version. This is also not absolutely necessary. See also Step 5 (next chapter).

Note

The electronic power supply must not be interrupted during the firmware update, otherwise the update will need to be restarted.

Note

To safely remove the memory card, see Chapter "Memory card functions (Page 329)".

Step 3: Update the STARTER project

Install the SSP that matches the new firmware version (e.g. SSP SINAMICS DCM V1.5).

SSPs for different versions of the same drive can be simultaneously installed in STARTER.

Open the existing STARTER project (that refers to an old device version). Right-click the device in the project navigator and select "Target device" → "Device version...". Select the

new device version and confirm with "Change version". The project is converted to the new device version.

Note

STARTER does not support a "downgrade" of the firmware version (e.g. V1.2 to V1.1).

Step 4: Load into the target system, RAM to ROM

Load the project into the drive (load into the target system) and permanently save the parameter assignment (carry out RAM to ROM).

11.1.2 Upgrading the DCC technology option

Step 5: Update the DCC technology option (DCBLIB) and the DCC charts

It is not absolutely necessary to upgrade the DCC library. Only upgrade the DCC library if you wish to use functions that the old DCC library does not support.

It is only possible to upgrade the DCC library via the associated STARTER project. While upgrading, it is not permissible that there is a DCC chart in the drive.

After you have upgraded the unit firmware according to the previous chapter, update the DCC technology option as follows:

1. Establish a connection to the drive using STARTER.
2. Delete the parameter assignment and DCC charts in the drive, by setting p0976 = 200. After deleting, the parameterization including the DCC charts only exist in STARTER.
3. After the system was reset via p0967 = 200, re-establish a connection to the drive via STARTER.

4. Import the new DCC library (see Chapter "Drive Control Chart (DCC) (Page 635)")

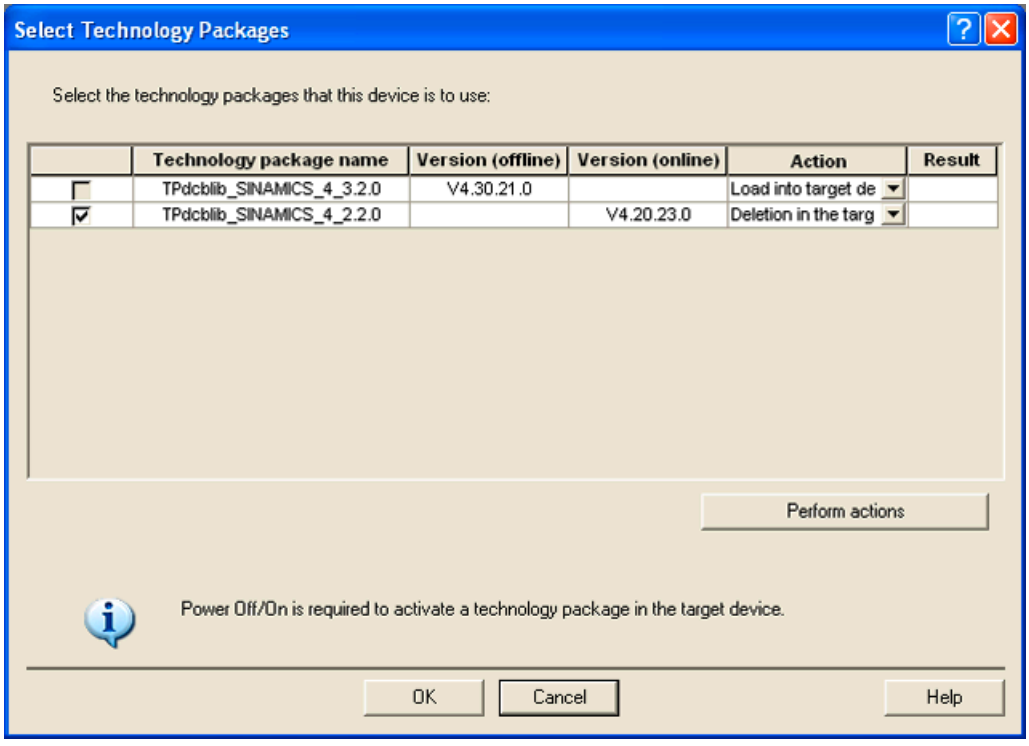

Figure 11-1 Selecting technology packages

5. Carry out a POWER OFF / POWER ON to activate the new DCC library.
6. Convert the existing DCC charts
   - Open the DCC editor by double clicking on the DCC chart.
   - In the DCC editor, in the menu, select "Options" → "Block types..."
   - Answer the question "Do you wish to update the block types in the DCC editor" with "OK".

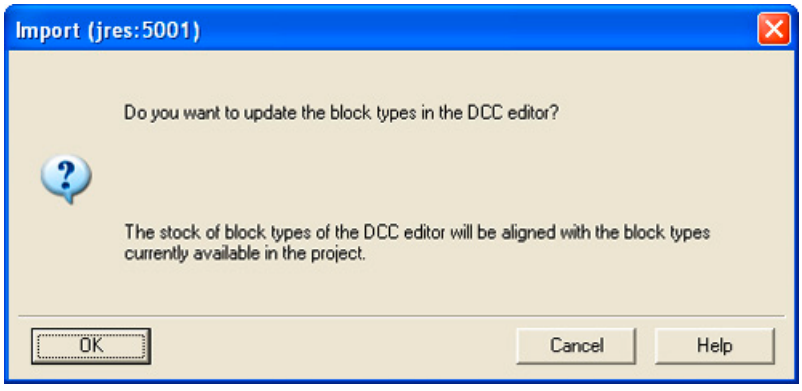

Figure 11-2 Importing the DCC library (1)

   - Shift the DCC library, which appears in the left-hand window, to the right with ">>".

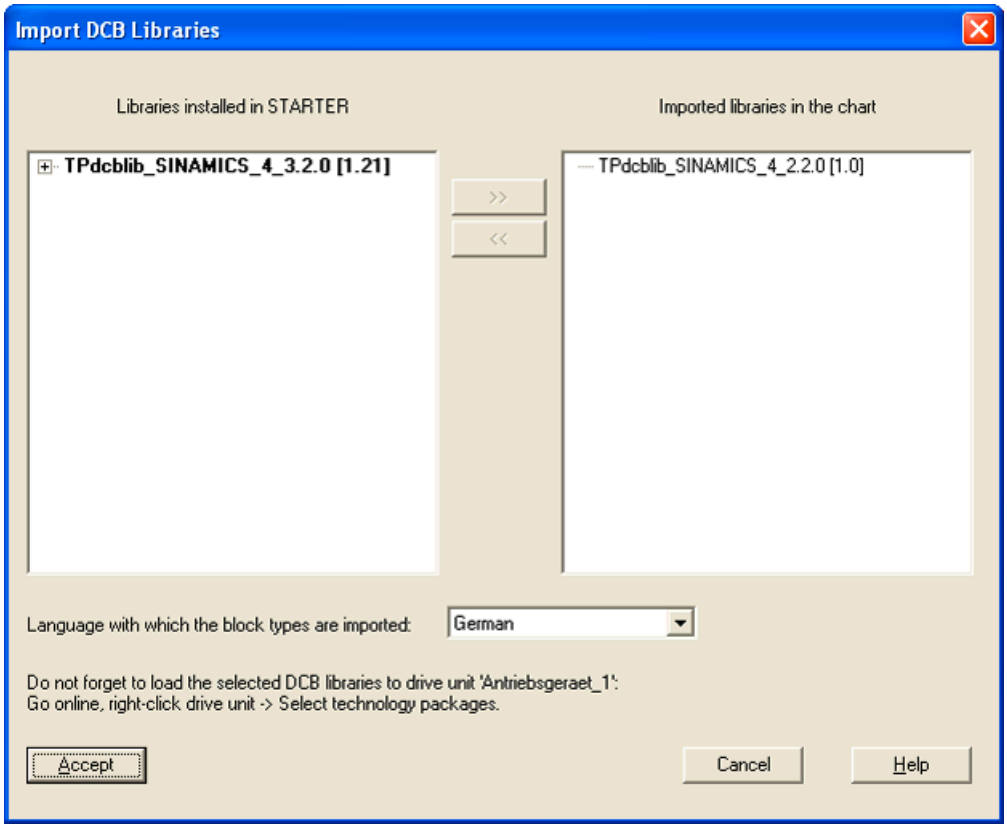

Figure 11-3 Importing the DCC library (2)

   - Select "Apply".
   - The chart is compiled into the new version

– Perform these steps for all DCC charts which are in the drive.

Step 6: Load into the target system, RAM to ROM

Load the project into the drive (load into the target system) to upgrade the charts in the drive to the new version and permanently save the parameter assignment (carry out RAM to ROM).

11.2 Replacing the CUD

Note

The information regarding electrostatic sensitive devices must be carefully observed. See Chapter "ESD-sensitive components (Page 27)".

NOTICE
Use the supplied mounting aid The module is equipped on both sides with highly sensitive components that can be damaged if installed incorrectly. • It is therefore essential that you use the supplied mounting aid (protective cover) when installing and removing the CUD.

Required tools

Torx screwdrivers TX10 (CUD) and TX20/TX30 (front cover).

Removing the CUD

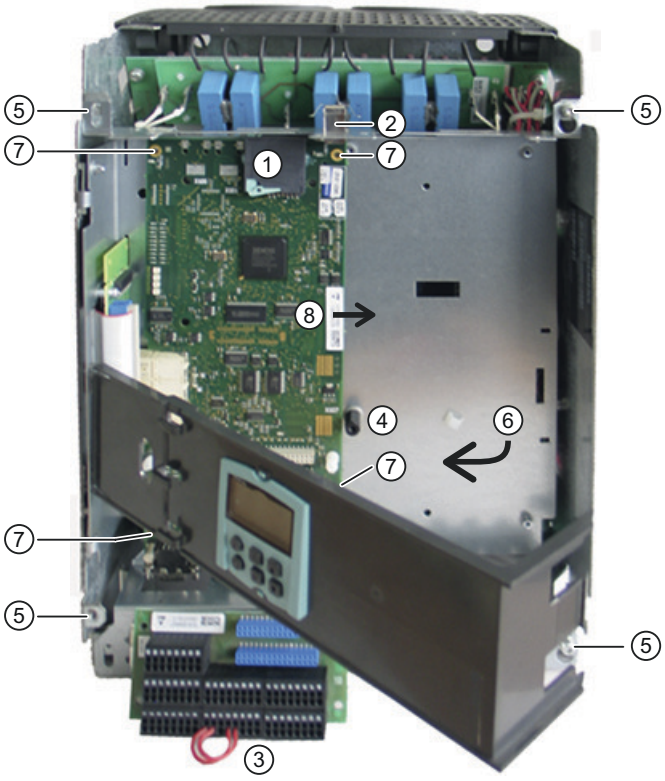

Figure 11-4 Removing the CUD

1. If available, remove the memory card ①.
2. Release the shield clamp ②.
3. Remove the Connector Board ③. The connection wires remain in the terminals.
4. If a CBE20 module is being used, then remove the PROFINET cable.
5. Release all the plug connections on the CUD.
6. Remove the support element ④ (only for the standard CUD).
   To do this, remove the 4 fastening screws ⑤ of the support plate for the CUD.
   Tilt the support plate for the CUD through 90 ° to the left ⑥.
   When unscrewing the support element, you can hold the nuts on the lower side of the support plate.
7. Release the 4 CUD fastening screws ⑦.

8. Move the mounting aid provided between the CUD and the mounting bolts.

NOTICE
Damage to the CUD if incorrectly removed There are sensitive components on the rear of the CUD that may be torn off or damaged by coming into contact with the mounting bolts when withdrawing the CUD without the mounting aid. • After removing the screws and before pulling out the CUD, the module must be raised slightly and the supplied mounting aid (protective cover) inserted between the CUD and the assembly bolts in order to prevent any damage to the CUD to be replaced.

9. Carefully withdraw the CUD to the right ⑧.

Installing the CUD

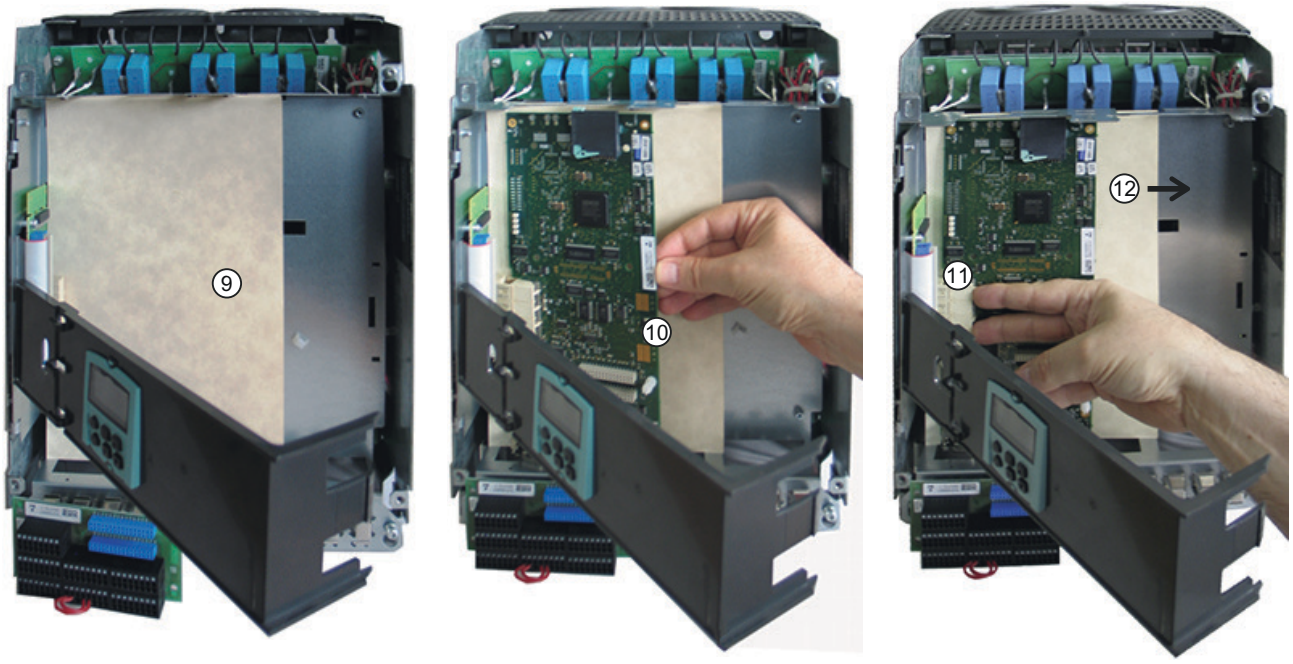

Figure 11-5 Installing the CUD

1. Insert the mounting aid ⑨ so that the mounting bolts located below are covered.
2. Position the new CUD at an angle of between 10° and 15° at the connector and align it so that it is parallel with the side panel ⑩.
3. Fix the CUD by applying pressure to the connector strip ⑪.
4. Withdraw the mounting aid ⑫.
5. Tighten the CUD fixing screws (1 Nm).
6. Mount the support element on the CUD support plate, tighten the nuts by hand.
7. Tighten the CUD support plate screws (1.5 Nm).
8. Install all the plug connections withdrawn when removing the old CUD.

9. Mount the Connector Board.
10. Fix the operator panel holding bracket.

Replacement/installation of a CUD in the right slot

A CUD is installed in the right slot in the same way as in the left slot.

For simple handling, it is recommended that you swing out the electronics plate slightly.

Make sure that the mounting bolts are reliably and securely covered by the mounting aid.

11.3 Replacing the back-up battery in the AOP30 operator panel

Table 11-1 Technical specifications of the backup battery

Type	CR2032 3 V lithium battery
Manufacturer	Maxell, Sony, Panasonic
Nominal capacity	220 mAh
Self-discharge at 20 °C	1 %/year
Service life (in backup mode)	> 1 year at 70 °C; >1.5 years at 20 °C
Service life (during operation)	> 2 years

Replacement

1. Disconnect the SINAMICS DCM from the power supply
2. Open the cabinet.
3. Disconnect the 24 V DC power supply and communications line on the operator panel.
4. Open the cover of the battery compartment.
5. Remove the old battery.
6. Insert the new battery.
7. Close the cover of the battery compartment.
8. Reconnect the 24 V DC power supply and communications line.
9. Close the cabinet.

Note

The battery must be replaced within one minute to ensure that no AOP settings are lost.

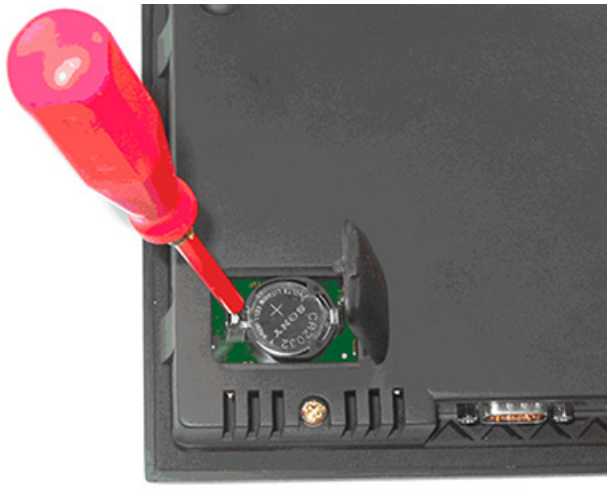

Figure 11-6 Replacing the backup battery for the cabinet operator panel

Note

The battery must be disposed of in accordance with the manufacturer guidelines and applicable country-specific laws and directives.

Applications

12

12.1 Using SINAMICS DCM in shipbuilding

When using SINAMICS DCM in shipbuilding, the following points must be observed:

- Radio interference suppression filters must be used in the armature circuit and in the field circuit (see Chapter "Connecting (Page 67)")
- For EMC-compliant installation, see Chapter “Connecting (Page 67)”.
- Use coated modules (option M08), see Chapter "Ordering information for options and accessories (Page 32)".

12.2 Use of the SINAMICS DCM in galvanizing and dip-painting plants

⚠ WARNING

Danger to life when using the STO switch-off signal path of the SINAMICS DCM or the functional safety application examples STO (Safe Torque Off) or SS1-t (Safe Stop 1 time monitored) as "emergency switching-off" function.

Using the STO switch-off signal path or using the application examples in Chapter "Functional safety (Page 671)" as emergency switching-off function is not certified and when incorrectly used can result in death or severe injury.

- Carefully note that the STO switch-off signal path and/or the application examples are not certified for implementing the "Emergency switching off" function with the listed safety- and/or performance levels.

2Q devices are used when using the SINAMICS DCM in galvanizing, dip-painting or similar plants.

2Q devices have a thyristor bridge in B6 circuit. In this power unit topology, the output voltage of the SINAMICS DCM is partly negative for firing angles between 60° and 120°. In order to ensure that no negative voltages are present at the load, i.e. at the galvanizing and paint tanks, an external freewheeling diode is usually installed on the DC side for these applications. This is not part of the SINAMICS DCM, but rather is installed in the control cabinet.

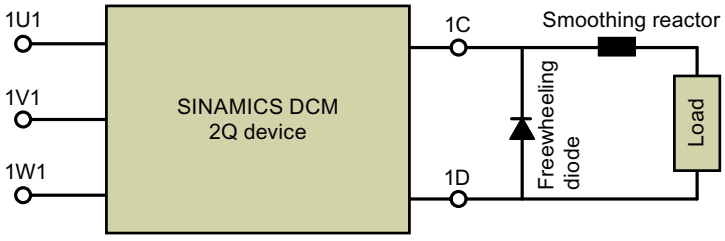

Figure 12-1 SINAMICS DCM, 2Q device with external freewheeling diode

Make sure that in this case, the current actual value sensing in the converter only measures part of the load current, i.e. the current through the converter, **not** the freewheeling current.

This means that the SINAMICS DCM cannot control the load current.

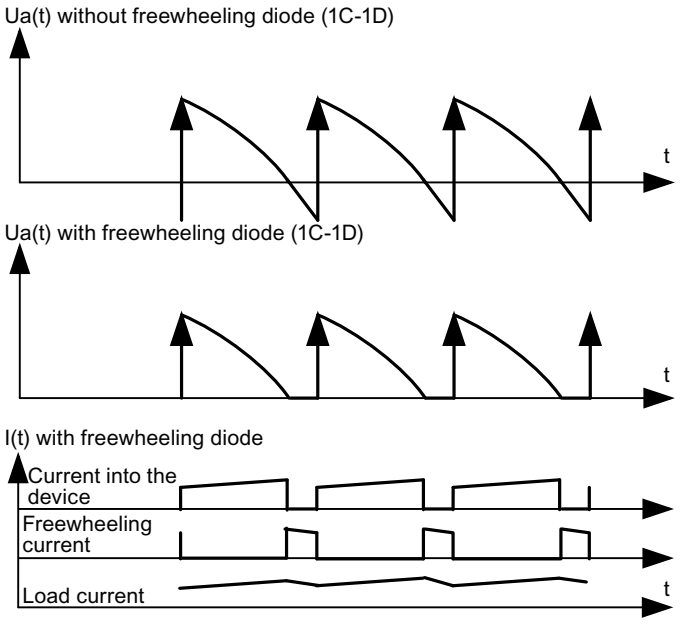

Figure 12-2 Voltage and current curves

In order to be able to control the load current, it is recommended that an external actual current sensing circuit be used for these applications. Whereby, the entire load current (including the freewheeling current) is measured via an external shunt. The shunt voltage must be increased via an external shunt converter and then led to the SINAMICS DCM via an analog input. See function diagram 6850, column 2.

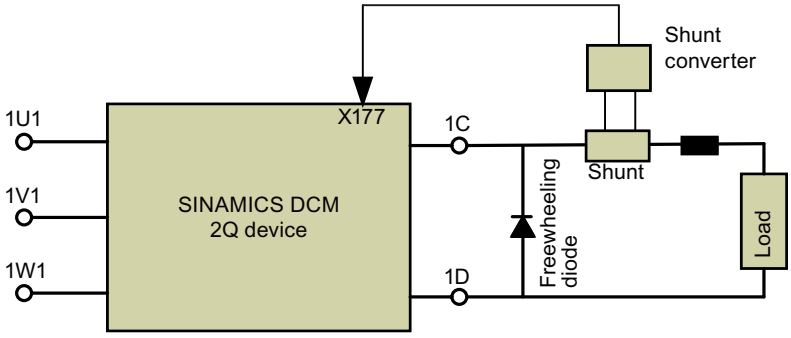

Figure 12-3 SINAMICS DCM with external current actual value sensing

Parameter

p51852 Selection of external current actual value sensing
p51853 Scaling of external current actual value sensing

12.3 Using SINAMICS DCM as thyristor controller in heating applications

Under certain preconditions, the SINAMICS DCM can be used as three-phase AC power controller for heating applications.
This means that in some cases SIVOLT A three-phase AC power controllers can be replaced by SINAMICS DCM converters.

More information

You can download more application examples from the Internet: Manuals and application notes (https://support.industry.siemens.com/cs/ww/en/ps/13298)

Functional safety

13

For SINAMICS DCM, by means of an integrated STO switch-off signal path in conjunction with only one main contactor and/or circuit breaker, safety requirement levels up to SIL 3 and PL e can be achieved over the complete performance and power range.

In addition, control via a safety relay or F-PLC is necessary.

This provides a consistently uniform solution for safety requirements up to SIL 3 and PL e, which also permits considerable savings in space, investment and service costs.

Note

Responsibility of the user for system design and the function

The products described here have been developed to implement safety-related functions as part of a complete plant or machine.

A complete, safety-related system is generally equipped with sensors, evaluation units, and signaling units, and uses reliable shutdown concepts.

It is the responsibility of the manufacturer to ensure that the system or machine is functioning properly as a whole.

Siemens AG, its subsidiaries, and associated companies (hereinafter referred to as "Siemens") are not in a position to guarantee every characteristic of a complete plant or machine not designed by Siemens.

Nor can Siemens assume liability for recommendations that appear or are implied in the following description. No new guarantee, warranty, or liability claims beyond the scope of the Siemens delivery terms of supply are to be derived or inferred from the following description.

⚠ WARNING

Danger to life when inadmissibly changing the firing pulse supply

The STO subfunction of SINAMICS DCM is based on shutting down the thyristor firing pulses.

All guaranteed properties of this function, e.g. provided in the operating instructions and TÜV certificate, can only be guaranteed when the firing pulse supply of the thyristors remains unchanged when compared to the state when it was initially delivered.

In particular, the following requirements and restrictions should be carefully observed so that the guaranteed properties of the STO subfunction (functional safety) and the TÜV certificate remain valid:

- The power unit must be connected as shown here in example 1: see Chapter "Division options (Page 96)".
- It is not permissible that the firing pulse transformer module is modified in any way (e.g. removed or split). It is not permissible to connect firing pulse transformers in parallel.
- It is not permissible that the control of the firing pulse transformer module by the Power Interface (X21A, X22A) is in any way modified.
  An external infeed of the 24 V supply voltage for the firing pulse transformer module is not permissible.
  Connections X21A and X22A between the Power Interface and the firing pulse transformer module must be carefully routed to protect them against external voltages (spurious interference).
- External firing pulse amplifiers are not permissible.

If this is not observed, then it is possible that the required safety- or performance level is no longer reached. This can result in severe injury or death.

13.1 Emergency Off and Emergency Stop

"Emergency Off" and "Emergency Stop" are commands that minimize different risks in the machine or plant.
The following table shows the basic differences between these two functions.

The STO function of the SINAMICS DCM is suitable for achieving an Emergency Stop but not an Emergency Off.

Table 13-1 Difference between Emergency Off and Emergency Stop

Risk:	Risk of electric shock: 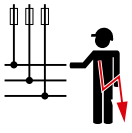	Risk of unexpected motion: 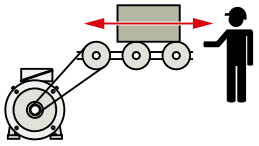
Measure to minimize risk:	**Safe switch off** Switching off the electric power supply for the installation, either completely or partially.	**Safely stop and safely prevent re-starting** Stopping or preventing the dangerous movement

Command:	**Emergency Off**	**Emergency Stop**
Solution:	Switch off the power supply: 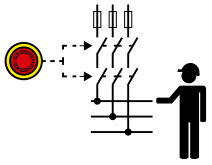	Select STO: 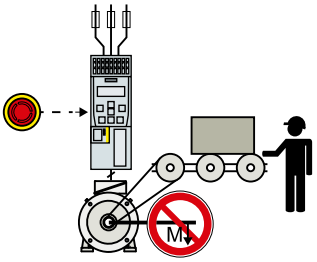 An Emergency Stop function brings about a torque-free state but not necessarily a de-energized state.

WARNING

Danger to life when using the STO switch-off signal path of the SINAMICS DCM or the functional safety application examples STO (Safe Torque Off) or SS1-t (Safe Stop 1 time monitored) as emergency switching-off function.

With the STO switch-off signal path of the SINAMICS DCM in conjunction with a main contactor or circuit breaker and the described functional safety applications example, the Emergency Stop function can be implemented up to SIL 3 or PL e.

Using the STO switch-off signal path or using the application examples as emergency switching-off function is not certified and when incorrectly used can result in death or severe injury.

- Carefully note that the STO switch-off signal path and/or the application examples are not certified for implementing the "Emergency switching off" function with the listed safety- and/or performance levels.

13.2 Safety functions according to IEC 61800-5-2

With SINAMICS DCM, safety functions STO and SS1-t according to IEC 61800-5-2 can be implemented.

The basic properties of these functions are described in the following chapters.

13.2.1 Safe Torque Off (STO)



Figure 13-1 Safe Torque Off (STO)

Safe Torque Off is a safety subfunction that immediately ensures that torque-generating energy is not fed to the motor. This function corresponds to stop category 0 according to IEC 60204-1.

A switch-on inhibit, which prevents automatic restart after deactivating STO, must be implemented by the upstream external monitoring and control system (e.g. 3SK1), according to the requirements of IEC 60204-1, Chapter 9.2.5.

Typical applications

Applications include all machines and systems with moving axes (e.g. conveyor technology, fans). STO allows personnel to safely work with a protective door open; for example.

13.2.2 Safe Stop 1 (SS1-t, time controlled)

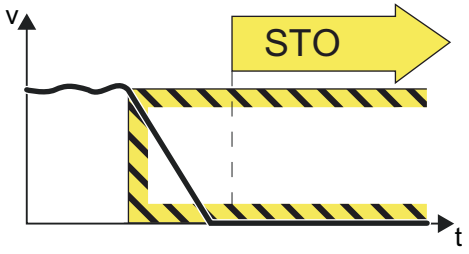

Figure 13-2 Safe Stop 1 (SS1-t, time controlled)

Safe Stop 1 (time controlled) causes the motor to be braked (this function is integrated in the drive) - and after a specified time interval, the Safe Torque Off function is initiated. This function corresponds to Stop Category 1 according to IEC 60204-1.

Typical applications

SS1-t can be used where it is not possible to bring a drive with a load to a standstill in a sufficiently short time merely by switching off the energy supply (coasting down).

13.3 Safety functions of the SINAMICS DCM

13.3.1 Fundamentals and technical specifications

Technical fundamentals and data

From function release 04, SINAMICS DCM is equipped with an STO switch-off signal path. No additional license is required for this function.

The certificate of TÜV Süd [German Technical Inspectorate] is available in the Industry Online Support under entry ID 109762418 (Certificate (https://support.industry.siemens.com/cs/de/de/view/109762418/en)).

Note

For older devices up to and including product version 03, it is not possible to retrofit functional safety or safety function STO, and it has therefore not been released.

These devices are not included in the specified safety certificate.

For devices such as these, it is not permissible that safety function STO is used, for example, after replacing or updating modules.

In conjunction with external safety relays (e.g. 3SK1 or 3SK2) and a redundant switch-off signal path using power contactors or circuit breakers for the armature circuit as well as the associated diagnostic paths, a "Safe Torque Off" (STO) or "Safe Stop 1 time controlled" (SS1-t) safety function can be achieved up to SIL 3 / PL e according to IEC 62061 or ISO 13849-1.

Safety functions STO and SS1-t encompasses three safety subfunctions:

1. **Detect**
   Performed externally, e.g. by emergency stop button or other sensors
2. **Evaluate**
   Performed externally, e.g. using a 3SK1 or 3SK2 safety relay
   - Evaluation and diagnostics of the input / sensor circuits
   - Logical interconnection of input signals as well as diagnostics and parameterization
   - Controlling the switch-off signal paths
   - Diagnostics of the switch-off signal paths via their feedback circuits
3. **React**
   Performed by two separate channels with different technologies:
   - Switch-off signal path channel 1 through the STO switch-off signal path of the DCM
   - Switch-off signal path channel 2 through the line contactor or the circuit breaker of the armature circuit

13.3.2 Performance characteristics of SINAMICS DCM for safety-related evaluation

Table 13-2 Safety-related key data of the SINAMICS DCM

Functional safety	
$MTTF_D$ according to ISO 13849-1	500 years
Diagnostics coverage (DC) according to ISO 13849-1/IEC 61508	99%
Maximum installation altitude above sea level	4000 m [1)]
T1 value for proof test interval or service duration according to ISO 13849-1/IEC 61508	20 years
Response time when activating STO	Maximal 250 ms [2)]

1) This value refers purely to the STO switch-off signal path of the SINAMICS DCM, see also the next chapter.

2) The external redundant switch-off signal path via the line contactor/circuit breaker must also be designed for a response time of maximum 250 ms.

13.3.3 Performance characteristics of functional safety application examples

Table 13-3 Safety-related key data of the functional safety application (see notes)

Safety integrity level (SIL) according to IEC 61508	• maximum SIL 3 (power contactor in the armature circuit) • maximum SIL 2 (circuit breaker in the armature circuit) Depending on the application and diagnostic test interval
Performance level (PL) according to ISO 13849-1	• maximum PL e (power contactor in the armature circuit) • maximum PL d (circuit breaker in the armature circuit) Depending on the application and diagnostic test interval
Category according to ISO 13849-1	• maximum Category 4 (power contactor in the armature circuit) • maximum Category 3 (circuit breaker in the armature circuit) Depending on the application and diagnostic test interval
Maximum operating altitude above MSL	2000 m

Note

The SIL, PL and Category classifications listed in the table refer purely to the application examples.

Depending on the diagnostics capability of the safety relays used, it may be possible to achieve even better values.

Note

The application examples, the proposed safety relays, contactor relays and power switching devices (power contactor, circuit breaker) are designed for an installation altitude of up to 2000 m.

The following points must be observed for installation altitudes above 2000 m:

- 3SK safety relays
  For higher installation altitudes up to 4000 m, 3SK2 safety relays can be used; for possible restrictions, see the following FAQ:
  FAQ 3SK1 and 3SK2 up to 4000 m installation altitude (https://support.industry.siemens.com/cs/de/en/view/109792701).
- 3RT2 power contactors
  3RH2 contactor relays
  At an installation altitude above 2000 m, a derating must be carried out in accordance with the "Equipment Manual - SIRIUS contactors / 3RT contactor combinations".
- 3WA1 circuit breaker
  At an installation altitude above 2000 m, a derating must be carried out in accordance with the "Equipment Manual - air circuit breaker 3WA".

Note

For the proposed safety relays, contactor relays and power switching devices (power contactor, circuit breaker), the permissible temperature range and any temperature derating that may be required in accordance with the documentation for the individual components must be observed.

The general environmental conditions and technical data for the SINAMICS DCM are listed in the following chapter: Technical data (Page 43).

13.3.4 Standards

EN ISO 13849-1:2016	Safety of Machinery; Safety-Related Parts of Control Systems - Part 1: General principles for design
EN ISO 13849-2:2013	Safety of Machinery; Safety-Related Parts of Control Systems - Part 2: Validation
IEC 61800-5-2:2017	Adjustable-speed electrical power drive systems – Part 5-2: Safety requirements – Functional safety
IEC 62061:2015	Safety of machinery – Functional safety of safety-related electrical, electronic and programmable electronic control systems
IEC 61508-2:2010	Functional safety of electrical/electronic/programmable electronic safety-related systems – Part 2: Requirements placed on safety-related electrical/electronic/programmable electronic systems
IEC 61511-1:2017	Functional safety – Safety instrumented systems for the process industry sector – Part 1: General, terminology, requirements relating to systems, software and hardware

13.4 Functional safety: Activation for SINAMICS DCM

In the delivery state, the STO circuit of the SINAMICS DCM is deactivated using a jumper between terminals X200-1 and X200-2. As a consequence, STO is permanently deselected, and the converter can be operated, independent of the signal states at the STO terminals. Terminals XS1-105 and XS1-106 are also jumpered when delivered (E-Stop deactivated).

The following change is required in order to use the STO function:
The jumper between terminals X200-1 and X200-2 must be removed. As a consequence, the STO circuit can be activated and a safety relay can be connected.

The application examples use the E-Stop function; for this reason the jumper between terminals XS1-105 and XS1-106 must also be removed in order to establish the circuits shown. The terminals must be wired in accordance with the respective application example.

13.5 Application examples

Note

Warranty and liability for application examples

The application examples are not binding and do not claim to be complete regarding configuration, equipment or any eventuality which may arise.

Application examples are not customer-specific solutions and are only intended to provide assistance with typical tasks.

As plant constructor/user, you are solely responsible for ensuring that the products described are operated correctly. Application examples do not relieve you of your responsibility for safe handling when using, installing, operating and maintaining the equipment.
Especially for a plant or system, a risk analysis and risk assessment (see Chapter "Risk analysis and risk assessment (Page 693)") as well as a validation or check (see Chapter "Validating/checking the safety functions (Page 693)") of the safety functions must be performed if these were configured based on the application examples shown.

The following chapters describe application examples for implementing STO and SS1-t safety functions for applications with a safety relay and a power switching device (power contactor or circuit breaker) to safely shut down the line supply to the armature circuit (second channel):

- Chapter "STO with power contactor in the armature circuit, controlled by mechanical switches/relay outputs (Page 685)"
- Chapter "STO with circuit breaker in the armature circuit, controlled by mechanical switches/relay outputs (Page 686)"
- Chapter "STO with power contactor in the armature circuit, controlled by semiconductor outputs (Page 688)"
- Chapter "SS1-t with power contactor in the armature circuit, controlled by mechanical switches/relay outputs (Page 691)"
- Chapter "SS1-t with power contactor in the armature circuit, controlled by semiconductor outputs (Page 692)"

13.5.1 Description of application examples

In the application examples shown here, the SINAMICS DCM is controlled via an additional 3SK1121-2CB41 safety relay and the feedback signal evaluated (F1, green block).

For SS1-t applications, an additional 3SK1121-2CB42 safety relay is used, whose delay time allows the drive to brake along the quick stop ramp (OFF3) before shutting down with STO (F2, green block).

Sensor circuit

The sensor circuit for selecting the safety function must be performed in two channels. Switches according to ISO 13850, positive opening according to IEC 60947-5-1, or suitable safety relays or safety controls must be used as actuating elements.

⚠ WARNING

Failure of the safety functions as a result of an unsuitable actuating element

An unsuitable actuating element may cause the safety function to fail, which can result in serious injury or death.

- Select the correct actuating element to comply with the applicable standard (DIN EN ISO 13849-1 Cat. 3 PL d or DIN EN 61508 SIL2) for the complete system.

Shutdown channels

The first shutdown channel of the safety function is realized via input STO (X200-2) of the SINAMICS DCM (red blocks) and is controlled by terminals 13/14 of safety relay F1.
This shutdown channel also shuts down the SINAMICS DCM via input E-Stop (XS1-105).
(E-Stop: see Chapter "Safety shutdown (E-STOP) (Page 538)")

Via terminals 37/38 of safety relay F1, the second shutdown channel (blue blocks) of the safety function interrupt the control of the contactor relay KA1 via terminals XR1-109, XR1-110 of the SINAMICS DCM.

When contactor relay KA1 drops out, the following happens

- Power contactor QA1 for the line supply to the armature circuit is opened by interrupting the power supply of contactor coils (**A1** and **A2**) or
- Circuit breaker QA1 for the line supply to the armature circuit is opened and interlocked using the undervoltage release **U<**.

The control for line contactor QF1 of the field circuit is additionally interrupted via terminals 47/48 of safety relay F1 and via contactor relay KF1.

Shutting down the second shutdown channel is delayed by 50 ms when compared to the first shutdown channel as a result of F1 in order to shut down the power unit in an orderly fashion and to facilitate that the power contactor and/or the circuit breaker for the line supply to the armature circuit is switched in a no-load condition.

Switching in a no-load condition reduces the stress on the contact blocks and therefore increases the service life and availability of the system.

For an SS1-t application, the safety relay for STO shutdown (F1) is controlled by an additional safety relay F2.
For an Emergency Stop command, safety relay F2 first activates the fast stop function OFF3 (terminal X177.15, DI/DO 4) of the SINAMICS DCM via terminals 13/14.
After the set delay time has elapsed, F2 initiates STO at safety relay F1.
To realize this, F2 is connected to inputs T1/IN1 and T2/IN2 of F1 via contacts 37/38 and 47/48.

Feedback signal circuit

The feedback signal circuit for safety relay F1 is closed via:

- terminals RM1 (X201-2) / RM2 (X201-1) of the SINAMICS DCM
- The positively driven contacts of contactor relays KA1/KF1
- The mirror contacts of power contactor QA1 and/or the auxiliary contacts of circuit breaker QA1 for the armature circuit
- The mirror contacts of line contactor QF1 for the field circuit

⚠ WARNING

Failure of the self diagnostics as a result of additional components in the feedback circuit

The self diagnostics of the safety function can fail by installing additional components, such as indicator lights, contactors, sirens in the feedback signal circuit of the safety relays. As a result, it is possible that the required safety- or performance level is no longer achieved. This can result in severe injury or death.

- Ensure that the feedback signal circuits of the safety relay and/or the F-PLC only contain components that are parts of the safety function.
- To query status information of the safety circuit only use contacts or outputs that are independent of the safety circuit and feedback signal circuit.
  The state of the safety circuit can be determined for example via the state of the E-Stop signal (r53100) or additional contacts of the safety relay.

13.5.2 General information on the application examples

- Safety relays should preferably be used with positively driven relay contacts, as safety relays with semiconductor outputs [1)] output test pulses at regular intervals also for the self-test. For the SINAMICS DCM, these test pulses can result in undesirable shutdown of the drive or cause fuses to rupture.
  Safety relays that are able to filter out test pulses from the control signals for the SINAMICS DCM are suggested in the application examples.
  Additional information on this topic is provided in the following documents:
  - Operating instructions of the safety relays
  - FAQ "Test pulses for safety-oriented SIMATIC ET 200S modules": FAQ 44452714 (https://support.industry.siemens.com/cs/de/en/view/44452714)
  - FAQ "Contact extension of a fail-safe control system with 3SK1 and 3RQ1": FAQ 76676971 (https://support.industry.siemens.com/cs/de/en/view/76676971)

  ⚠ WARNING

  Danger to life as a result of an unexpected restart

  When using safety relays with an unsuitable filter time for test pulses, the following can occur
  - Unexpected restart (bright pulse) or
  - Unexpected restart after an unexpected stop (dark pulse)

  An unexpected restart such as this can result in death or severe injury.
  - Ensure that the safety relays used are suitable and approved for filtering out test pulses.
  - Ensure that the filter times of the safety relays are sufficiently long in order to reliably filter out test pulses (bright- and dark pulses).

- Input E-Stop (XS1-105) must always be controlled via the safety circuit. It is not permissible that it is jumpered (e.g. to XS1-106).
  (E-Stop: see Chapter "Safety shutdown (E-STOP) (Page 538)")
- As shown, the control of the power contactors and circuit breakers should be electrically isolated from the protective extra low voltage of the control circuits.
- The power contactor and/or the circuit breaker for the line supply to the armature circuit may be opened at the earliest 50 ms **after** the STO signal (X200-2, -3) and the E-Stop signal (XS1-105). This is secured in the application examples using safety relay F1.
  (E-Stop: see Chapter "Safety shutdown (E-STOP) (Page 538)")
- Observe the operating instructions of the safety components, for example safety relays and contactor relays.
- Observe the switching power of line contactor relay XR1-109 / XR1-110 (see Chapter "Assignment of electronics terminals at the Power Interface (Page 146)" of the SINAMICS DCM as well as safety relays and contactor relays.

[1)] Additional examples with pp-switching semiconductor outputs:
F-PLC, light arrays, laser scanners, ...

Note

Protective measures against overload and short-circuit (e.g. fuses) are not included in the diagrams of the application examples in order to improve the transparency.

Note

Carefully note the information regarding the maximum number of switching cycles of the switchgear (power contactors, circuit breakers, safety relays, contactor relays) as well as maintenance intervals.

The safety or performance level is also obtained from the number of switching cycles and the B10d values of switchgear.

Switchgear must be replaced in plenty of time in order to maintain the safety- or performance levels.

Table 13-4 Legend for the application example diagrams

Components	QA1	Power contactor or circuit breaker for line supply to armature circuit
	QF1	Line contactor, field circuit
	F1	Safety relay 3SK1121-2CB41 [1)], delay time 0.05 ... 3 s https://mall.industry.siemens.com/mall/de/de/Catalog/Product/3SK1121-2CB41
	F2	Safety relay 3SK1121-2CB42 1), delay time 0.5 ... 30 s https://mall.industry.siemens.com/mall/de/de/Catalog/Product/3SK1121-2CB42 For longer delay times of 5 ... 300 s, safety relay 3SK1121-2CB44 [1)] can be used. https://mall.industry.siemens.com/mall/de/de/Catalog/Product/3SK1121-2CB44
	KA1 KF1	3RH2131-2FB40 contactor relays to control the line contactors and/or the circuit breaker The contactor relays can be eliminated if the switching power of the line contactor control relay XR1 and the safety relays is sufficient to control the power contactors and/or the circuit breakers. https://mall.industry.siemens.com/mall/de/de/Catalog/Product/3RH2131-2FB40

SINAMICS DCM terminals	STO (X200-2, -3)	Selecting the STO function
	RM1 (X201-2) RM2 (X201-1)	Feedback signal contact "STO active" for a safety relay The contact is closed if STO is selected.
	E-Stop (XS1-106)	Input to activate the E-Stop function Shutdown of the SINAMICS DCM via the first channel of the safety relay or the F-PLC - in addition to activating the STO function.
	Relay for line contactor (XR1-109, -110)	Relay switching output for the line contactor Safety relay F1 interrupts the control of power contactor or circuit breaker QA1 through the SINAMICS DCM (second channel of the safety function).
	DI/DO 4 (X177.15)	Programmable DI/DO 4, used to select the quick stop function (OFF3) for SS1-t (corresponding parameter assignment of the SINAMICS DCM required).
	P24 (X177.9)	24 V supply for DI/DO 4
	M24 (X177.23)	Ground for the 24 V potential as well as reference ground for the following inputs: - STO (X200-1, X200-2) - E-Stop (XS1-106) - DI/DO 4 (X177.15)
Line supply	L1, L2, L3	Line connection for armature and field circuits
	L, N	Control voltage, max. AC 250 V
Symbols	U<	Undervoltage release circuit breaker
		Positively-driven contacts = combination of NO and NC contacts is designed so that they can never be simultaneously closed.
		Mirror contact = auxiliary NC contact that cannot be closed simultaneously with a main NO contact.
		DIP switch, the switch position is shown in **black**.

[1] The suggested safety relays are equipped with spring terminals.
Safety relays with screw terminals are available under Article No. 3SK1121-1CB41, 3SK1121-1CB42, 3SK1121-1CB44.

13.5.3 Application examples STO

13.5.3.1 Timing of the shutdown with STO

Shutdown with STO takes place as follows:

1. Via inputs IN1 and IN2, safety relay F1 receives the command to shut down the drive with STO.
2. F1 instantaneously interrupts the first channel of the safety function (terminals 13/14).
   As a consequence, the shutdown function E-Stop of the SINAMICS DCM is triggered, which initiates the orderly shutdown of the power unit.
   At the same time, function STO of the SINAMICS DCM is controlled, the response time is max. 250 ms (filter time).
   (E-Stop: see Chapter "Safety shutdown (E-STOP) (Page 538)")
3. After the set delay time of 50 ms has elapsed, safety relay F1 also interrupts the second channel of the safety function, and therefore the control of contactor relays KA1 (F1, terminals 37/38) and KF1 (F1, terminals 47/48).
   Via QA1 and QF1, this shuts down the line supply for the armature and field circuits.

13.5.3.2 STO with power contactor in the armature circuit, controlled by mechanical switches/relay outputs

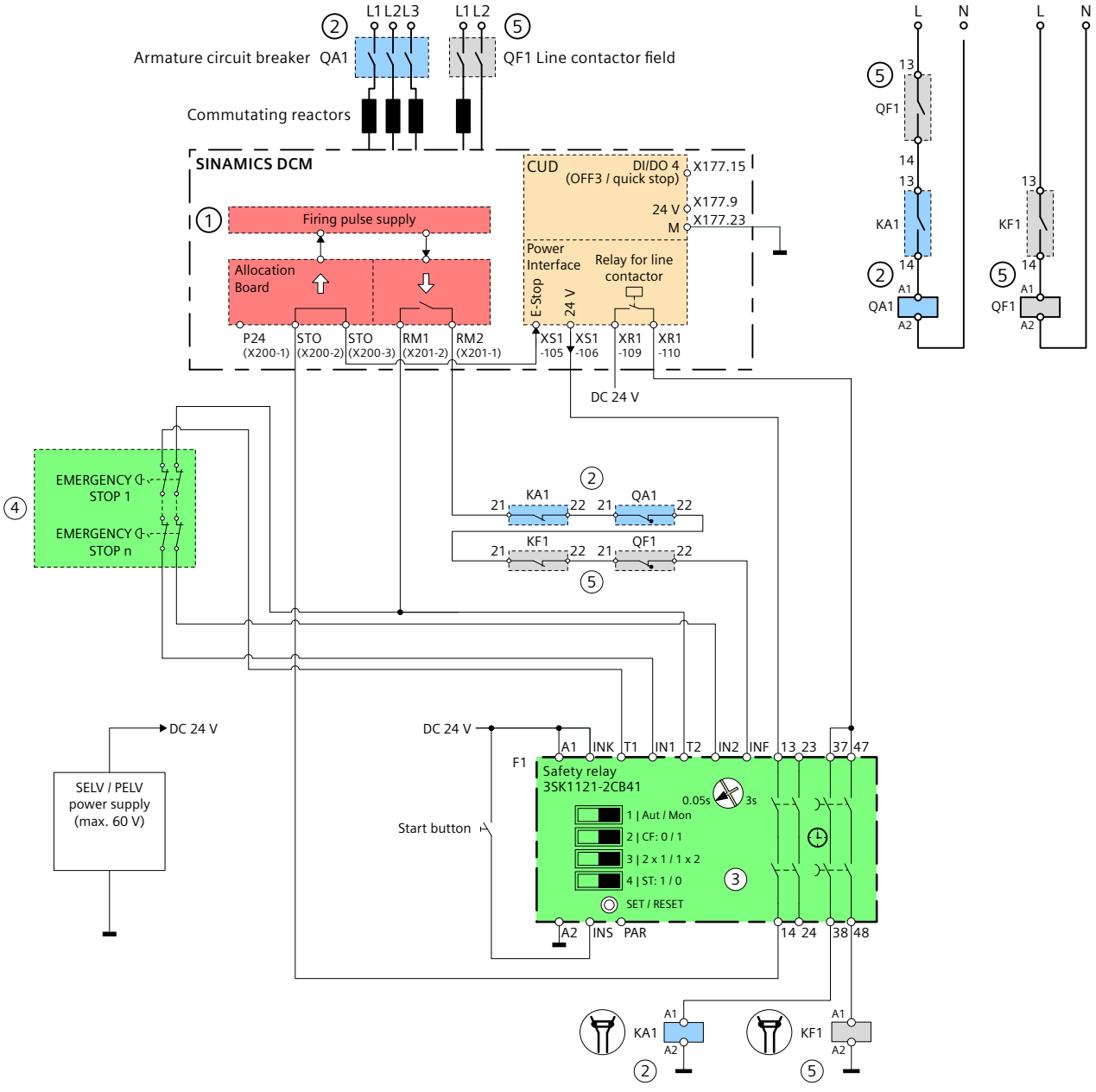

① First channel (red): Firing pulse shutdown
② Second channel (blue): Armature circuit circuit breaker
③ Safety relay STO (green), delay time setting: 50 ms
④ Symbolic representation of a sensor circuit (green)
⑤ Contact blocks for field excitation (gray): Line contactor, field circuit
(prevalent solution: The field circuit is controlled together with the armature circuit)

Figure 13-3 STO application with power contactor in the armature circuit, controlled by switches / relay outputs

13.5.3.3 STO with circuit breaker in the armature circuit, controlled by mechanical switches/ relay outputs

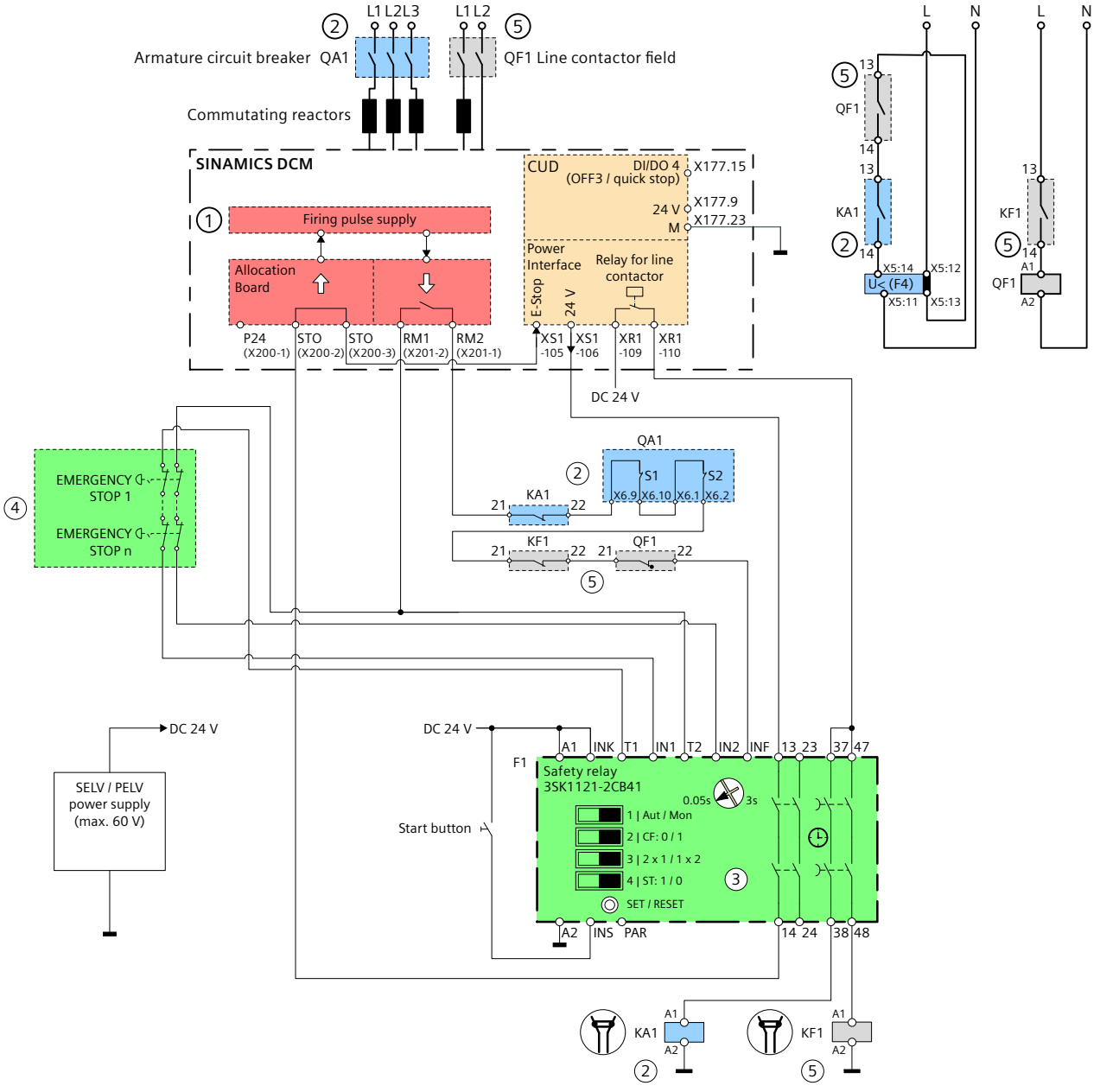

① First channel (red): Firing pulse shutdown
② Second channel (blue): 3WA circuit breaker armature circuit
③ Safety relay STO (green), delay time setting: 50 ms
④ Symbolic representation of the sensor circuit (green)
⑤ Contact blocks for field excitation (gray): Line contactor, field circuit
(prevalent solution: The field circuit is controlled together with the armature circuit)

Figure 13-4 STO application with circuit breaker in the armature circuit, controlled by switches / relay outputs

Note

To improve the level of transparency, the wiring of the signals used to close the circuit breaker, for example, the switch-on solenoid, ready-to-close signal and possibly a motorized operating mechanism to tension the spring energy store are not shown.

13.5.3.4 STO with power contactor in the armature circuit, controlled by semiconductor outputs

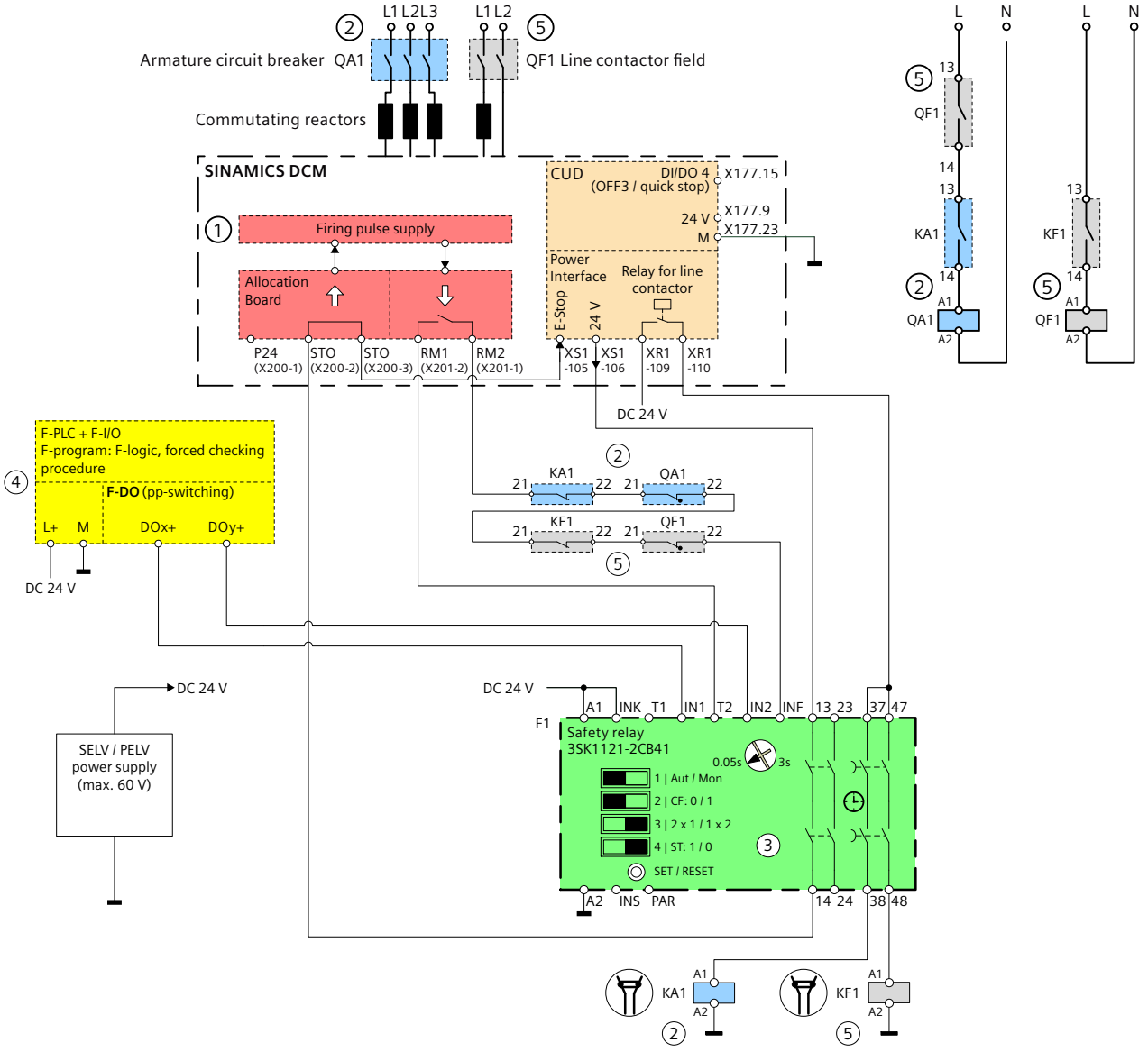

① First channel (red): Firing pulse shutdown

② Second channel (blue): Armature circuit circuit breaker

③ Safety relay STO (green), delay time setting: 50 ms

④ Safety relay or F-PLC with semiconductor outputs (yellow)

In the application example shown, the following functions are deactivated at safety relay F1:

- Cross-circuit detection of the connections to F1
- Reset of the safety circuit (start button) and/or protection against restart

If required, these must be implemented in the higher-level safety system.

⑤ Contact blocks for field excitation (gray): Line contactor, field circuit
(prevalent solution: The field circuit is controlled together with the armature circuit)

Figure 13-5 Application STO with power contactor in the armature circuit, controlled by semiconductor outputs

13.5.4 Application examples SS1-t

For application SS1-t, the quick stop- or the OFF3 ramp of the SINAMICS DCM is used.
The drive must be appropriately parameterized.

Parameter assignment of the SINAMICS DCM for SS1-t

The following parameterization is required in drive object DC_CTRL for application SS1-t:

- p0849[0] = r53010.8 — Quick stop (OFF3) signal source 2 connected with DI/DO 4 (X177.15)
  Remark: p0848[0] / OFF3 signal source 1 is normally used for the fieldbus.
- p50789[0] = 0 — Configuring DI/DO 4 as input
- p50765 = 0 — DI/DO 4: No simulation mode
- p50296 where relevant, p50297, p50298 — Ramp-function generator quick stop (OFF3) ramp-down time Ramp-function generator quick stop (OFF3) initial rounding/final rounding

Note

When commissioning the system, the OFF-3 ramp of the SINAMICS DCM and the setting of the delay time on safety relay F2, must be manually coordinated with one another and the system or the process and appropriately set according to the safety requirements.

13.5.4.1 Timing of the shutdown with SS1-t

Shut down with SS1-t takes place as follows:

1. Via inputs IN1 and IN2, safety relay F2 receives the command to shut down the drive with SS1-t.
2. Via contacts of terminals 13/14, F2 instantaneously initiates a quick stop (OFF3) of the SINAMICS DCM (DI/DO 4, X177.15).
3. After the set delay time elapses, F2 selects STO via terminals 37/38 and 47/48 at safety relay F1 (IN1, IN2).
4. F1 instantaneously interrupts the first channel of the safety function (terminals 13/14). As a consequence, shutdown function E-Stop of the SINAMICS DCM is triggered, which introduces the controlled shutdown of the power unit. At the same time function STO of the SINAMICS DCM is controlled, the response time is max. 250 ms (filter time).
   (E-Stop: see Chapter "Safety shutdown (E-STOP) (Page 538)")
5. After the set delay time of 50 ms has elapsed, safety relay F1 also interrupts the second channel of the safety function, and therefore the control of contactor relays KA1 (F1, terminals 37/38) and KF1 (F1, terminals 47/48).
   Via QA1 and QF1, this shuts down the line supply for the armature and field converters.

Note

The coupling of F1 and F2 safety relays shown is an example.

Additional coupling options are listed in the operating instructions of the safety relays.

13.5.4.2 SS1-t with power contactor in the armature circuit, controlled by mechanical switches/relay outputs

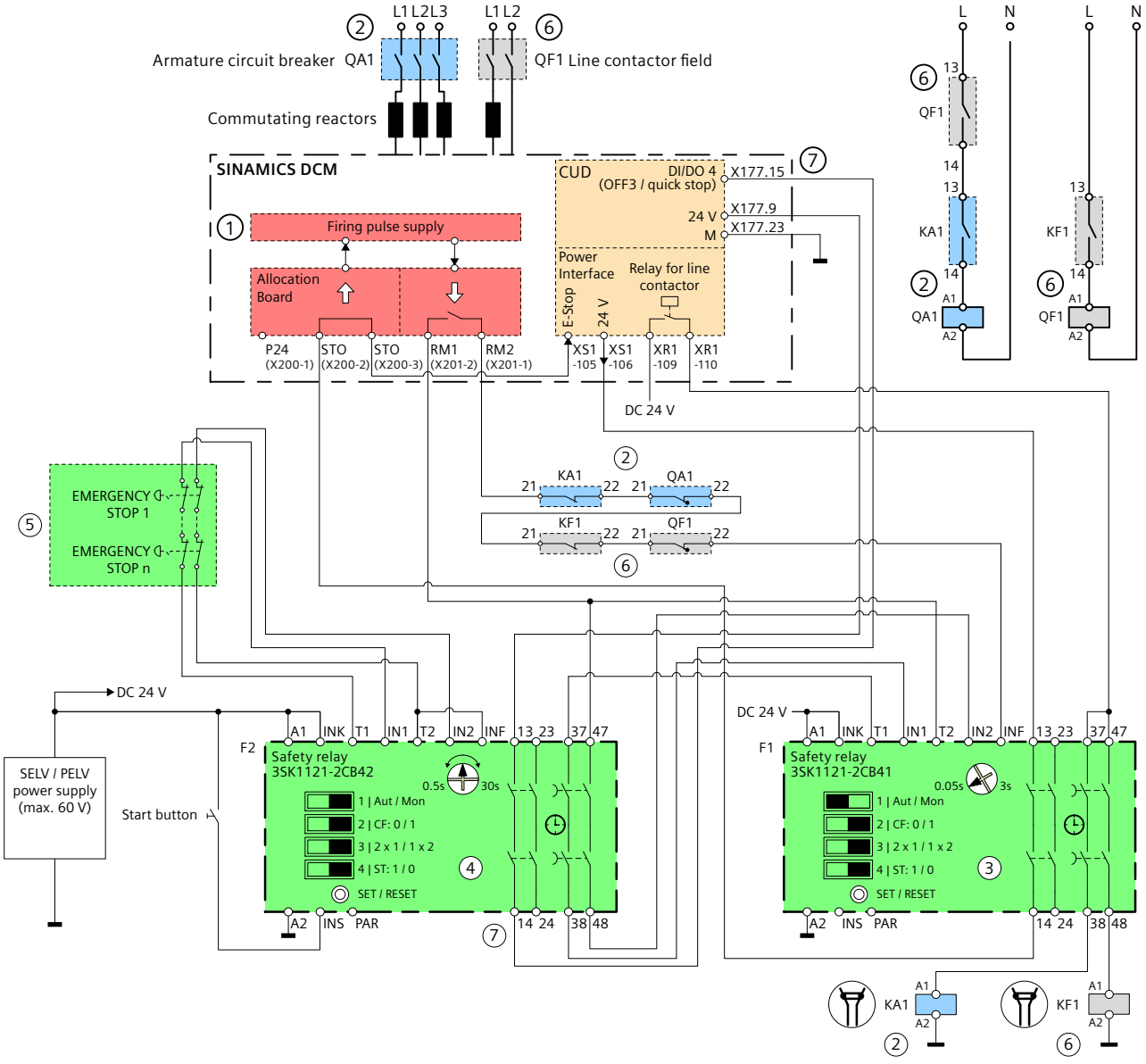

① First channel (red): Firing pulse shutdown
② Second channel (blue): Armature circuit circuit breaker
③ Safety relay STO (green), delay time setting: 50 ms
④ Safety relay SS1-t (green)
⑤ Symbolic representation of a sensor circuit (green)
⑥ Contact blocks for field excitation (gray): Line contactor, field circuit
(prevalent solution: The field circuit is controlled together with the armature circuit)
⑦ Quick stop/OFF3 command for SS1-t (gray)

Figure 13-6 Application SS1-t with power contactor in the armature circuit, controlled by switches/relay outputs

13.5.4.3 SS1-t with power contactor in the armature circuit, controlled by semiconductor outputs

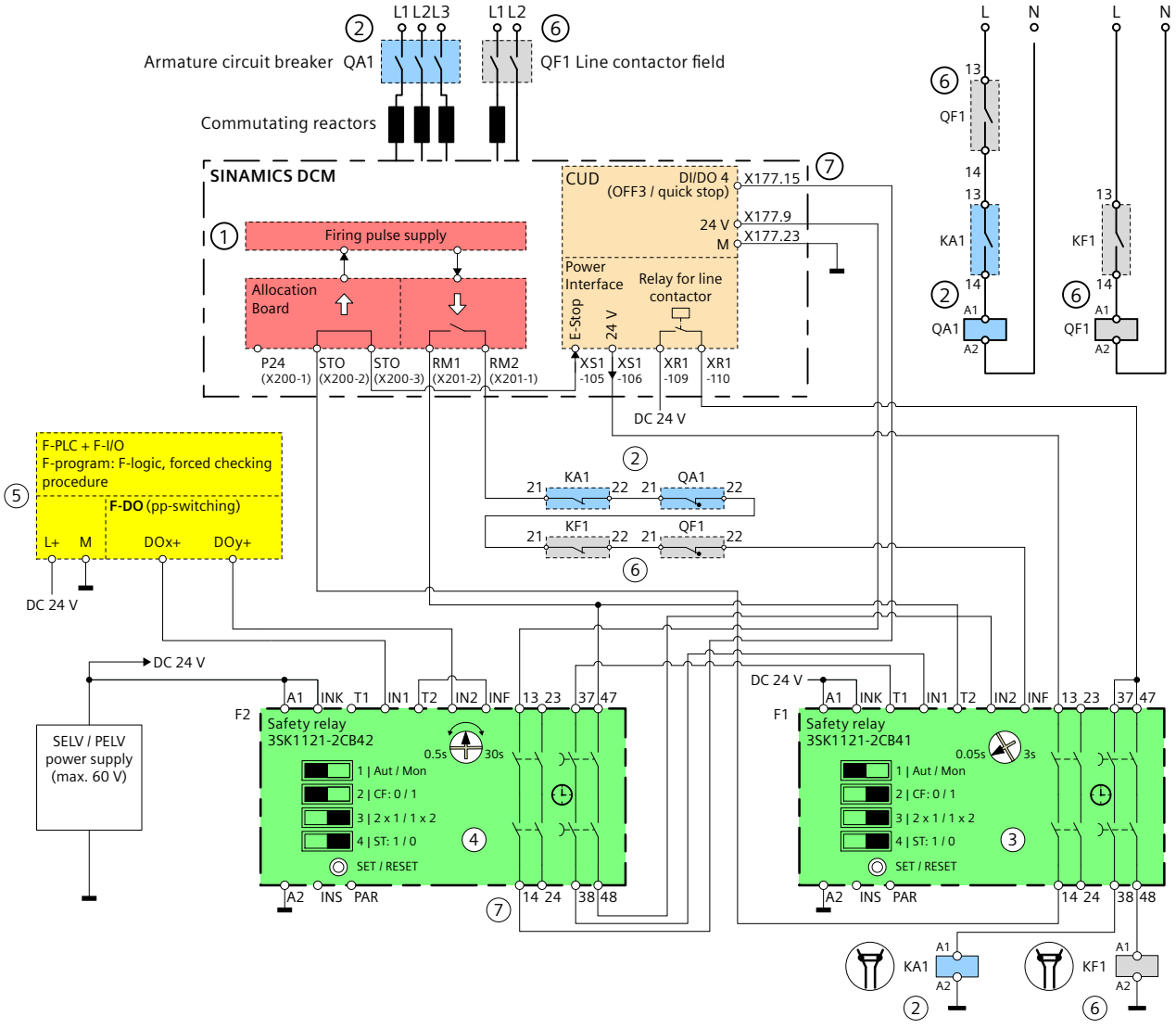

① First channel (red): Firing pulse shutdown

② Second channel (blue): Armature circuit circuit breaker

③ Safety relay STO (green), delay time setting: 50 ms

④ Safety relay SS1-t (green)

⑤ Safety relay or F-PLC with semiconductor outputs (yellow)

In the application example shown, the following functions are deactivated at safety relay F2:

- Cross-circuit detection of the connections to F2
- Reset of the safety circuit (start button) and/or protection against restart

If required, these must be implemented in the higher-level safety system.

⑥ Contact blocks for field excitation (gray): Line contactor, field circuit
(prevalent solution: The field circuit is controlled together with the armature circuit)

⑦ Quick stop/OFF3 command for SS1-t (gray)

Figure 13-7 Application SS1-t with power contactor in the armature circuit, controlled by semiconductor outputs

13.6 Risk analysis and risk assessment

Plants and machines as a result of their design and their functionality represent risks. This is the reason that the Machinery Directive requires that a risk assessment be performed for each machine and, if necessary, the level of risk reduced until the residual risk is less than the tolerable risk.

Additional notes on this topic and for applying the relevant standards and guidelines are provided in the Appendix "Standards and regulations relating to functional safety (Page 719)".

13.7 Validating/checking the safety functions

Carefully check/test the safety functions after commissioning the system for the first time, after carrying out any repairs and after each change to the machine/system, in particular the feedback circuits.

These tests must be performed by qualified personnel who, on account of their technical qualifications and knowledge of the safety functions, are in a position to perform the acceptance test in the correct manner.

13.8 Diagnostics test / forced checking procedure

In order to ensure that the function of the switch-off signal paths complies with the requirements laid down in the applicable standards, regulations and guidelines, these must be tested at regular intervals ("diagnostics test interval" in accordance with IEC 61800-5-2:2016). As a consequence, faults are detected in a sufficiently short time.

⚠ WARNING

Dangers when not regularly testing the switch-off signal paths.

Not regularly testing the switch-off signal paths can result in severe injury or death.

- Carefully ensure that the switch-off signal paths are tested (forced checking procedure: Selecting and deselecting function STO) at regular intervals.
  The forced checking procedure intervals depend on the safety function and the desired/required SIL / PL, Cat.

The external safety relay (e.g. 3SK11...) can use the feedback signals from the SINAMICS DCM and the feedback contacts to detect errors in the switch-off signal paths and then use the STO function to prevent a restart on both channels. This detects the fault, and the system is brought into a safe state until the system can be repaired.

Relationship between the forced checking procedure interval and SIL or PL and Cat.

The hardware, the hardware structure and, where applicable, the software (when using parameterizable or programmable external safety components), must correspond to the required SIL / PL and Cat.

Also see the application examples in the previous sections of this document.

For SINAMICS DCM, the following maximum diagnostic test intervals apply according to IEC 61800-5-2:2016:

- SIL 2/PL d, Cat. 3: Forced checking procedure at least once per year
- SIL 3 / PL e, Cat. 3: As a minimum, a forced checking procedure every 3 months
- SIL 3 / PL e, Cat. 4: Forced checking procedure at least once per day

13.9 Circuit breakers and power contactors

Note

The following points must be observed for the proposed power contactors and circuit breakers:

- Permissible installation altitude and any derating that may be required
- Permissible temperature range and any derating that may be required

Also observe the corresponding documentation for the respective components; see also Chapter "Performance characteristics of functional safety application examples (Page 676)".

6RA8013_XXXXX_0AA0	Value	Designation	Manufacturer	Article number
Rated DC current [A] (DC)	15	-	-	-
Rated supply voltage armature [V]	400 480	-	-	-
Contactor armature circuit	-	Main contactor designed for AC1, 40 A	Siemens	3RT2023-2AL20
Contactor field circuit	-	Field contactor designed for AC1	Siemens	3RT2015-2AP01

6RA8018_XXXXX_0AA0	Value	Designation	Manufacturer	Article number
Rated DC current [A] (DC)	30	-	-	-
Rated supply voltage armature [V]	400 480	-	-	-
Contactor armature circuit	-	Main contactor designed for AC1, 40 A	Siemens	3RT2023-2AL20
Contactor field circuit	-	Field contactor designed for AC1	Siemens	3RT2015-2AP01

6RA8025_XXXXX_0AA0	Value	Designation	Manufacturer	Article number
Rated DC current [A] (DC)	60	-	-	-
Rated supply voltage armature [V]	400 480 575	-	-	-
Contactor armature circuit	-	Main contactor designed for AC1, 50 A	Siemens	3RT2028-2AL20
Contactor field circuit	-	Field contactor designed for AC1	Siemens	3RT2015-2AP01

6RA8028_XXXXX_0AA0	Value	Designation	Manufacturer	Article number
Rated DC current [A] (DC)	90	-	-	-
Rated supply voltage armature [V]	400 480	-	-	-
Contactor armature circuit	-	Main contactor designed for AC1, 100 A	Siemens	3RT2037-3AL20
Contactor field circuit	-	Field contactor designed for AC1	Siemens	3RT2015-2AP01

6RA8031_XXXXX_0AA0	Value	Designation	Manufacturer	Article number
Rated DC current [A] (DC)	125	-	-	-
Rated supply voltage armature [V]	400 480 575	-	-	-
Contactor armature circuit	-	Main contactor designed for AC1, 120 A	Siemens	3RT2446-1AL20
Contactor field circuit	-	Field contactor designed for AC1	Siemens	3RT2015-2AP01

6RA8075_XXXXX_0AA0	Value	Designation	Manufacturer	Article number
Rated DC current [A] (DC)	210	-	-	-
Rated supply voltage armature [V]	400 480 575	-	-	-
Contactor armature circuit	-	Main contactor AC1, 275 A	Siemens	3RT1456-6AP36
Contactor field circuit	-	Field contactor designed for AC1	Siemens	3RT2015-2AP01

6RA8078_XXXXX_0AA0	Value	Designation	Manufacturer	Article number
Rated DC current [A] (DC)	280	-	-	-
Rated supply voltage armature [V]	400 480	-	-	-

Contactor armature circuit	-	Main contactor AC1, 275 A	Siemens	3RT1456-6AP36
Contactor field circuit	-	Field contactor designed for AC1	Siemens	3RT2015-2AP01

6RA8081_XXXXX_0AA0	Value	Designation	Manufacturer	Article number
Rated DC current [A] (DC)	400	-	-	-
Rated supply voltage armature [V]	400 575	-	-	-
Contactor armature circuit	-	Main contactor AC1, 400 A	Siemens	3RT1466-6AP36
Contactor field circuit	-	Field contactor designed for AC1 Field contactor designed for AC1	Siemens Siemens	3RT2023-2AL20 3RT2023-2AL24

6RA8082_XXXXX_0AA0	Value	Designation	Manufacturer	Article number
Rated DC current [A] (DC)	450	-	-	-
Rated supply voltage armature [V]	480	-	-	-
Contactor armature circuit	-	Main contactor AC1, 400 A	Siemens	3RT1466-6AP36
Contactor field circuit	-	Field contactor designed for AC1 Field contactor designed for AC1	Siemens Siemens	3RT2023-2AL20 3RT2023-2AL24

6RA8085_XXXXX_0AA0	Value	Designation	Manufacturer	Article number
Rated DC current [A] (DC)	600	-	-	-
Rated supply voltage armature [V]	400 480 575	-	-	-
Contactor armature circuit	-	Main contactor AC1, 690 A	Siemens	3RT1476-6AP36
Contactor field circuit	-	Field contactor designed for AC1 Field contactor designed for AC1	Siemens Siemens	3RT2023-2AL20 3RT2023-2AL24

6RA8086_XXXXX_0AA0	Value	Designation	Manufacturer	Article number
Rated DC current [A] (DC)	720 760	-	-	-
Rated supply voltage armature [V]	690	-	-	-
Contactor armature circuit	-	Main contactor AC1, 800 A	Siemens	3RT1481-6AP36
Contactor field circuit	-	Field contactor designed for AC1 Field contactor designed for AC1	Siemens Siemens	3RT2023-2AL20 3RT2023-2AL24

6RA8087_XXXXX_0AA0	Value	Designation	Manufacturer	Article number
Rated DC current [A] (DC)	800 850	-	-	-
Rated supply voltage armature [V]	400 480 575	-	-	-
Contactor armature circuit	-	Main contactor AC1, 800 A	Siemens	3RT1481-6AP36
Contactor field circuit	-	Field contactor designed for AC1 Field contactor designed for AC1	Siemens Siemens	3RT2023-2AL20 3RT2023-2AL24

6RA8088_XXXXX_0AA0	Value	Designation	Manufacturer	Article number
Rated DC current [A] (DC)	950	-	-	-
Rated supply voltage armature [V]	830	-	-	-
3WA circuit breaker armature circuit	-	3WA1 circuit breaker 1000 A 1000 V	Siemens	3WA1220-8AE03-4EV0-Z Z=B10
Contactor field circuit	-	Field contactor designed for AC1 Field contactor designed for AC1	Siemens Siemens	3RT2023-2AL20 3RT2023-2AL24

6RA8090_XXXXX_0AA0	Value	Designation	Manufacturer	Article number
Rated DC current [A] (DC)	1000 1100	-	-	-
Rated supply voltage armature [V]	575 690	-	-	-
3WA circuit breaker armature circuit	-	3WA1 circuit breaker 1000 A 690 V	Siemens Siemens	3WA1220-4AE03-4EV0-Z Z=B10 or 3WA1110-4AE03-4EV0
Contactor field circuit	-	Field contactor designed for AC1 Field contactor designed for AC1	Siemens Siemens	3RT2023-2AL20 3RT2023-2AL24

6RA8091_XXXXX_0AA0	Value	Designation	Manufacturer	Article number
Rated DC current [A] (DC)	1200	-	-	-
Rated supply voltage armature [V]	400 480	-	-	-
3WA circuit breaker armature circuit	-	3WA1 circuit breaker 1000 A 690 V	Siemens Siemens	3WA1220-4AE03-4EV0-Z Z=B10 or 3WA1110-4AE03-4EV0
Contactor field circuit	-	Field contactor designed for AC1 Field contactor designed for AC1	Siemens Siemens	3RT2023-2AL20 3RT2023-2AL24

6RA8093_XXXXX_0AA0	Value	Designation	Manufacturer	Article number
Rated DC current [A] (DC)	1500	-	-	-

Rated supply voltage armature [V]	690 830	-	-	-
3WA circuit breaker armature circuit	-	3WA1 circuit breaker 1250 A 690 V 3WA1 circuit breaker 1250 A 1000 V	Siemens Siemens Siemens	3WA1220-4AE03-4EV0-Z Z=B12 or 3WA1112-4AE03-4EV0 3WA1220-8AE03-4EV0-Z Z=B12
Contactor field circuit	-	Field contactor designed for AC1 Field contactor designed for AC1	Siemens Siemens	3RT2027-2AL20 3RT2037-3AL20

6RA8093_XXXXX_0AA0	Value	Designation	Manufacturer	Article number
Rated DC current [A] (DC)	1600	-	-	-
Rated supply voltage armature [V]	400 575	-	-	-
3WA circuit breaker armature circuit	-	3WA1 circuit breaker 1600 A 690 V	Siemens Siemens	3WA1220-4AE03-4EV0-Z Z=B16 oder 3WA1116-4AE03-4EV0
Contactor field circuit	-	Field contactor designed for AC1 Field contactor designed for AC1	Siemens Siemens	3RT2027-2AL20 3RT2037-3AL20

6RA8095_XXXXX_0AA0	Value	Designation	Manufacturer	Article number
Rated DC current [A] (DC)	2000	-	-	-
Rated supply voltage armature [V]	400 575 690 830	-	-	-
3WA circuit breaker armature circuit	-	3WA1 circuit breaker 2000 A 690 V 3WA1 circuit breaker 2000 A 1000 V	Siemens Siemens	3WA1220-4AE03-4EV0 3WA1220-8AE03-4EV0
Contactor field circuit	-	Field contactor designed for AC1 Field contactor designed for AC1	Siemens Siemens	3RT2027-2AL20 3RT2037-3AL20

6RA8096_XXXXX_0AA0	Value	Designation	Manufacturer	Article number
Rated DC current [A] (DC)	2200	-	-	-
Rated supply voltage armature [V]	575 690 950	-	-	-
3WA circuit breaker armature circuit	-	3WA1 circuit breaker 2000 A 690 V 3WA1 circuit breaker 2000 A 1000 V	Siemens Siemens	3WA1220-4AE03-4EV0 3WA1220-8AE03-4EV0
Contactor field circuit	-	Field contactor designed for AC1 Field contactor designed for AC1	Siemens Siemens	3RT2027-2AL20 3RT2037-3AL20

6RA8097_XXXXX_0AA0	Value	Designation	Manufacturer	Article number
Rated DC current [A] (DC)	2600 2800	-	-	-

Rated supply voltage armature [V]	575 690	-	-	-
3WA circuit breaker armature circuit	-	3WA1 circuit breaker 2500 A 690 V	Siemens	3WA1225-4AE03-4EV0
Contactor field circuit	-	Field contactor designed for AC1 Field contactor designed for AC1	Siemens Siemens	3RT2027-2AL20 3RT2037-3AL20

6RA8098_XXXXX_0AA0	Value	Designation	Manufacturer	
Rated DC current [A] (DC)	3000	-	-	-
Rated supply voltage armature [V]	400	-	-	-
3WA circuit breaker armature circuit	-	3WA1 circuit breaker 2500 A 690 V	Siemens	3WA1225-4AE03-4EV0
Contactor field circuit	-	Field contactor designed for AC1 Field contactor designed for AC1	Siemens Siemens	3RT2027-2AL20 3RT2037-3AL20

Appendix A

A

A.1 Certifications and standards

Certifications

Development, production, sales:

ISO 9001:2008	Quality management	
ISO 14001:2004	Environmental management	

Devices:

EAC		
Germanischer Lloyd	Shipbuilding [1]	11787-10HH
Lloyd's Register	Shipbuilding [1]	No. 06/20053
American Bureau of Shipping	Shipbuilding [1]	21-2113924-PDA
Det Norske Veritas	Shipbuilding [1]	No. E-10357 (DC converter) No. E-10358 (Control Module)

Communication:

PROFIBUS device (DP-V0, DP-V1, PROFIdrive 3.1.2)

PROFINET IO devices (V 2.2.4, PROFIdrive 4.1)

[1] In order to maintain the limit values decisive for certification for marine applications, the requirements as listed in Section Using SINAMICS DCM in shipbuilding (Page 667) must be observed.

Korean Certification (KC)

Type of Equipment	User's Guide
A급 기기 (업무용 방송통신기자재)	이 기기는 업무용(A급) 전자파적합기기로서 판매자 또는 사용자는 이 점을 주의하시기 바라며, 가정외의 지역에서 사용하는 것을 목적으로 합니다.
Class A Equipment (Industrial Broadcasting & Communication Equipment)	This equipment is **Industrial (Class A) electromagnetic wave suitability equipment** and seller or user should take notice of it, and this equipment is to be used in the places except for home.

The EMC limit values to be complied with for Korea correspond to the limit values of the EMC product standard for variable-speed electric drives IEC 61800-3, category C2 or limit value class A1 according to CISPR 11.

With suitable additional measures, the limit values according to category C2 or according to limit value class A1 are maintained.

To do this, an additional radio interference suppression filter (EMC filter) must be used and the converters must be installed in the control cabinet in compliance with EMC rules.

The appropriate radio interference suppression filters (for the field and armature circuits) for the SINAMICS DCM are listed in Catalog D23.1.

Additional notes are provided there as well as technical data and constraints regarding the use of radio interference suppression filters:

- The use in grounded line supplies
- The mandatory use of a commutating reactor

Detailed information about the basics of EMC and EMC-compliant design of drives can be found in the Chapter "Connecting (Page 67)".

Basic standards

IEC 60146-1-1	Semiconductor converters; General requirements and line-commutated converters; specification of basic requirements
IEC 61800-3	Adjustable speed electrical power drive systems - Part 3: EMC product standard including specific test methods
IEC 61800-5-1	Adjustable speed electrical power drive systems – Part 5-1: Safety requirements – Electrical, thermal, and energy

A.2 List of abbreviations

Note

The following list of abbreviations includes all abbreviations and their meanings used in the entire SINAMICS user documentation.

Abbreviation	Meaning, German	Meaning, English
A		
A...	Warnung	Alarm
AC	Wechselstrom	Alternating Current
ADC	Analog-Digital-Konverter	Analog Digital Converter
AI	Analogeingang	Analog input
AIM	Active Interface Module	Active Interface Module
ALM	Active Line Module	Active Line Module
AO	Analogausgang	Analog output

Abbreviation	Meaning, German	Meaning, English
AOP	Advanced Operator Panel	Advanced Operator Panel
APC	Advanced Positioning Control	Advanced Positioning Control
ASC	Ankerkurzschluss	Armature short-circuit
ASCII	Amerikanische Code-Norm für den Informationsaustausch	American Standard Code for Information Interchange
ASM	Asynchronmotor	Induction motor
B		
OC	Betriebsbedingung	Operating condition
BERO	Firmenname für einen Näherungsschalter	Trade name for a type of proximity switch
BI	Binektoreingang	Binector input
BIA	Berufsgenossenschaftliches Institut für Arbeitssicherheit	German Institute for Occupational Safety
BICO	Binektor-Konnektor-Technologie	Binector Connector Technology
BLM	Basic Line Module	Basic Line Module
BOP	Basic Operator Panel	Basic Operator Panel
C		
C	Kapazität	Capacitance
C...	Safety-Meldung	Safety message
CAN	Serielles Bussystem	Control Area Network
CBC	Kommunikationsbaugruppe CAN	Communication Board CAN
CD	Compact Disc	Compact Disc
CDS	Befehlsdatensatz	Command Data Set
CF	CompactFlash	CompactFlash
CI	Konnektoreingang	Connector Input
CNC	Computerunterstützte numerische Steuerung	Computer Numerical Control
CO	Konnektorausgang	Connector Output
CO/BO	Konnektor-/Binektorausgang	Connector Output / Binector Output
COB ID	CAN Object-Identification	CAN Object-Identification
COM	Mittelkontakt eines Wechselkontaktes	Common contact of a changeover relay
CP	Kommunikationsprozessor	Communication Processor
CPU	Zentrale Recheneinheit	Central Processing Unit
CRC	Checksummenprüfung	Cyclic Redundancy Check
CSM	Control Supply Module	Control Supply Module
CU	Control Unit	Control Unit
D		
DAC	Digital-Analog-Konverter	Digital Analog Converter
DC	Gleichstrom	Direct Current
DCB	Drive Control Block	Drive Control Block
DCC	Drive Control Chart	Drive Control Chart
DCN	Gleichstrom negativ	Direct Current Negative
DCP	Gleichstrom positiv	Direct Current Positive
DDS	Drive data set	Drive Data Set
DI	Digitaleingang	Digital Input

Abbreviation	Meaning, German	Meaning, English
DI/DO	Digitaleingang/-ausgang bidirektional	Bidirectional Digital Input/Output
DMC	DRIVE-CLiQ Module Cabinet (Hub)	DRIVE-CLiQ Module Cabinet (Hub)
DO	Digitalausgang	Digital Output
DO	Antriebsobjekt	Drive Object
DP	Dezentrale Peripherie	Decentralized Peripherals
DPRAM	Speicher mit beidseitigem Zugriff	Dual-Port Random Access Memory
DRAM	Dynamischer Speicher	Dynamic Random Access Memory
DRIVE-CLiQ	Drive Component Link with IQ	Drive Component Link with IQ
DSC	Dynamic Servo Control	Dynamic Servo Control
E		
EASC	Externer Ankerkurzschluss	External Armature Short-Circuit
EDS	Geberdatensatz	Encoder Data Set
ESD	Elektrostatisch gefährdete Baugruppen	Electrostatic-Sensitive Devices
ELP	Erdschlussüberwachung	Earth Leakage Protection
EMF	Elektromagnetisches Feld	Electromagnetic Field (EMF)
EMF	Elektromotorische Kraft	Electromotive Force (EMF)
EMC	Elektromagnetische Verträglichkeit	Electromagnetic Compatibility
EN	Europäische Norm	European standard
EnDat	Geber-Schnittstelle	Encoder Data Interface
EP	Impulsfreigabe	Enable Pulses
EPOS	Einfachpositionierer	Basic positioner
ES	Engineering System	Engineering System
ECD	Ersatzschaltbild	Equivalent Circuit Diagram
ESR	Erweitertes Stillsetzen und Rückziehen	Extended Stop and Retract
F		
F...	Störung	Fault
FAQ	Häufig gestellte Fragen	Frequently Asked Questions
FBL	Freie Funktionsblöcke	Free Blocks
FCC	Function Control Chart	Function Control Chart
FCC	Flussstromregelung	Flux Current Control
F-DI	Fehlersicherer Digitaleingang	Failsafe Digital Input
F-DO	Fehlersicherer Digitalausgang	Failsafe Digital Output
FEM	Fremderregter Synchronmotor	Separately excited synchronous motor
FEPROM	Schreib- und Lesespeicher nichtflüchtig	Flash EPROM
FG	Funktionsgenerator	Function Generator
FI	Fehlerstrom-Schutzschalter	Earth Leakage Circuit-Breaker (ELCB)
FP	Funktionsplan	Function diagram
FPGA	Field Programmable Gate Array	Field Programmable Gate Array
FS	Product version	Functional state
FW	Firmware	Firmware
G		
GB	Gigabyte	Gigabyte
GC	Global-Control-Telegramm (Broadcast-Telegramm)	Global Control Telegram (Broadcast Telegram)

Abbreviation	Meaning, German	Meaning, English
GSD	Gerätestammdatei: beschreibt die Merkmale eines PROFIBUS-Devices	Device master file: describes the features of a PROFIBUS device
GSV	Gate Supply Voltage	Gate Supply Voltage
GUID	Globally Unique Identifier	Globally Unique Identifier
H		
HF	Hochfrequenz	High Frequency
HFD	Hochfrequenzdrossel	High frequency reactor
RFG	Hochlaufgeber	Ramp-Function Generator
HMI	Mensch-Maschine-Schnittstelle	Human Machine Interface
HTL	Logik mit hoher Störschwelle	High-Threshold Logic
HW	Hardware	Hardware
I		
i. V.	Under development: This property is currently not available	In preparation: this feature is currently not available
I/O	Eingang/Ausgang	Input/Output
IASC	Interner Ankerkurzschluss	Internal Armature Short-Circuit
IBN	Inbetriebnahme	Commissioning
ID	Identifizierung	Identifier
IEC	Internationale Norm in der Elektrotechnik	International Electrotechnical Commission
IF	Interface	Interface
IGBT	Bipolartransistor mit isolierter Steuerelektrode	Insulated Gate Bipolar Transistor
IL	Impulslöschung	Pulse suppression
IPO	Interpolator cycle	Interpolator clock
IT	Non-grounded three-phase line supply	Insulated three-phase supply network
IVP	Interner Spannungsschutz	Internal Voltage Protection
J		
JOG	Tippen	Jogging
K		
KDV	Kreuzweiser Datenvergleich	Data cross-checking
KIP	Kinetische Pufferung	Kinetic buffering
Kp	Proportionalverstärkung	Proportional gain
KTY	Spezieller Temperatursensor	Special temperature sensor
L		
L	Induktivität	Inductance
LED	Leuchtdiode	Light Emitting Diode
LIN	Linearmotor	Linear motor
LR	Lageregler	Position controller
LSB	Niederstwertiges Bit	Least Significant Bit
LSS	Netzschalter	Line Side Switch
LU	Längeneinheit	Length Unit
LWL	Lichtwellenleiter	Fiber-optic cable
M		
M	Masse	Reference potential, zero potential

Abbreviation	Meaning, German	Meaning, English
MB	Megabyte	Megabyte
MCC	Motion Control Chart	Motion Control Chart
MDS	Motordatensatz	Motor Data Set
MLFB	Maschinenlesbare Fabrikatebezeichnung	Machine-readable product designation
MMC	Mensch-Maschine-Kommunikation	Man-Machine Communication
MSB	Höchstwertiges Bit	Most Significant Bit
MSCY_C1	Zyklische Kommunikation zwischen Master (Klasse 1) und Device	Master Device Cycle Class 1
MSC	Motorstromrichter	Motor power converter
MT	Messtaster	Measuring input
N		
N. C.	Nicht angeschlossen	Not Connected
N...	Keine Meldung oder Interne Meldung	No Report
NAMUR	Normenarbeitsgemeinschaft für Mess- und Regeltechnik in der chemischen Industrie	Standardization association for instrumentation and control in the chemical industry
NC	Öffner	Normally Closed (contact)
NC	Numerische Steuerung	Numerical Control
NEMA	Normengremium in USA (United States of America)	National Electrical Manufacturers Association
NM	Nullmarke	Zero mark
NO	Schließer	Normally Open (contact)
NSR	Netzstromrichter	Line power converter
O		
OA	Open Architecture	Open Architecture
OEM	Original Equipment Manufacturer	Original Equipment Manufacturer
OLP	Busstecker für Lichtleiter	Optical Link Plug
OMI	Option Module Interface	Option Module Interface
P		
p...	Einstellparameter	Adjustable parameter
PB	PROFIBUS	PROFIBUS
PcCtrl	Steuerungshoheit	Master control
PD	PROFIdrive	PROFIdrive
PDS	Leistungsteildatensatz	Power Unit Data Set
PE	Schutzerde	Protective Earth
PELV	Schutzkleinspannung	Protective Extra-Low Voltage
PEM	Permanenterregter Synchronmotor	Permanent-magnet synchronous motor
PG	Programmiergerät	Programming device
PI	Proportional Integral	Proportional Integral
PID	Proportional Integral Differential	Proportional Integral Differential
PLC	Speicherprogrammierbare Steuerung (SPS)	Programmable Logical Controller
PLL	Phase Locked Loop	Phase Locked Loop
PNO	PROFIBUS Nutzerorganisation	PROFIBUS user organization
PPI	Punkt zu Punkt Schnittstelle	Point-to-Point Interface
PRBS	Weißes Rauschen	Pseudo Random Binary Signal

Abbreviation	Meaning, German	Meaning, English
PROFIBUS	Serieller Datenbus	Process Field Bus
PS	Stromversorgung	Power Supply
PSA	Power Stack Adapter	Power Stack Adapter
PTC	Positiver Temperaturkoeffizient	Positive Temperature Coefficient
PTP	Punkt zu Punkt	Point-To-Point
PWM	Pulsweitenmodulation	Pulse Width Modulation
PZD	PROFIBUS Prozessdaten	PROFIBUS process data
R		
r...	Beobachtungsparameter (nur lesbar)	Display parameter (read only)
RAM	Speicher zum Lesen und Schreiben	Random Access Memory
RCCB	Fehlerstrom-Schutzschalter	Residual Current Circuit Breaker
RCD	Fehlerstrom-Schutzschalter	Residual Current Device
RJ45	Norm. Beschreibt eine 8-polige Steckverbindung mit Twisted-Pair Ethernet.	Standard. Describes an 8-pole plug connector with twisted pair Ethernet.
RKA	Rückkühlanlage	Cooling unit
RO	Nur lesbar	Read Only
RPDO	Receive Process Data Object	Receive Process Data Object
RS232	Serielle Schnittstelle	Serial interface
RS485	Norm. Beschreibt die Physik einer digitalen seriellen Schnittstelle.	Standard. Describes the physical characteristics of a digital serial interface.
RTC	Echtzeituhr	Real-Time Clock
S		
S1	Dauerbetrieb	Continuous operation
S3	Aussetzbetrieb	Intermittent duty
SBC	Sichere Bremsenansteuerung	Safe Brake Control
SBH	Sicherer Betriebshalt	Safe Operating Stop
SBR	Sichere Beschleunigungsüberwachung	Safe Acceleration Monitor
SCA	Sichere Nocke	Safe Cam
SE	Sicherer Software-Endschalter	Safe software limit switch
SG	Sicher reduzierte Geschwindigkeit	Safely reduced speed
SGA	Sicherheitsgerichteter Ausgang	Safety-related output
SGE	Sicherheitsgerichteter Eingang	Safety-related input
SH	Sicherer Halt	Safety standstill
SI	Safety Integrated	Safety Integrated
SIL	Sicherheitsintegritätsgrad	Safety Integrity Level
SLM	Smart Line Module	Smart Line Module
SLP	Sicher begrenzte Position	Safely-Limited Position
SLS	Sicher begrenzte Geschwindigkeit	Safely-Limited Speed
SLVC	Geberlose Vektorregelung	Sensorless Vector Control
SM	Sensor Module	Sensor Module
SMC	Sensor Module Cabinet	Sensor Module Cabinet
SME	Sensor Module External	Sensor Module External
SN	Sicherer Software-Nocken	Safe software cam

Abbreviation	Meaning, German	Meaning, English
SOS	Sicherer Betriebshalt	Safe Operating Stop
SPC	Sollwertkanal	Setpoint Channel
SPS	Speicherprogrammierbare Steuerung	Programmable Logic Controller (PLC)
SS1	Sicherer Stop 1	Safe Stop 1
SS2	Sicherer Stop 2	Safe Stop 2
SSI	Synchron Serielle Schnittstelle	Synchronous Serial Interface
SSM	Sichere Rückmeldung der Geschwindigkeitsüberwachung (n < nx)	Safe Speed Monitor
SSR	Sichere Bremsrampe	Safe Stop Ramp
STO	Sicher abgeschaltetes Moment	Safe Torque Off
STW	PROFIBUS Steuerwort	PROFIBUS control word
SVA	Raumzeigerapproximation	Space vector approximation
T		
TB	Terminal Board	Terminal Board
TIA	Totally Integrated Automation	Totally Integrated Automation
TM	Terminal Module	Terminal Module
TN	Drehstromversorgungsnetz geerdet	Grounded three-phase line supply
Tn	Nachstellzeit	Integral time
TPDO	Transmit Process Data Object	Transmit Process Data Object
TT	Drehstromversorgungsnetz geerdet	Grounded three-phase line supply
TTL	Transistor-Transistor-Logik	Transistor-Transistor Logic
Tv	Vorhaltezeit	Derivative-action time
U		
UL	Underwriters Laboratories Inc.	Underwriters Laboratories Inc.
UPS	Unterbrechungsfreie Stromversorgung	Uninterruptible Power Supply
V		
VC	Vektorregelung	Vector Control
Vdc	Zwischenkreisspannung	DC-link voltage
VdcN	Teilzwischenkreisspannung negativ	Partial DC-link voltage negative
VdcP	Teilzwischenkreisspannung positiv	Partial DC-link voltage positive
VDE	Verband Deutscher Elektrotechniker	Association of German Electrical Engineers
VDI	Verein Deutscher Ingenieure	Association of German Engineers
Vpp	Volt Spitze zu Spitze	Volt peak to peak
VSM	Voltage Sensing Module	Voltage Sensing Module
W		
AR	Wiedereinschaltautomatik	Automatic Restart
WZM	Werkzeugmaschine	Machine tool
X		
XML	Erweiterbare Auszeichnungssprache (Standardsprache für Web-Publishing und Dokumentenmanagement)	Extensible Markup Language
Z		

Abbreviation	Meaning, German	Meaning, English
ZK	Zwischenkreis	DC link
ZSW	PROFIBUS Zustandswort	PROFIBUS status word

Abbreviations, DC-specific terms

Abbreviation	Meaning
2Q	2 quadrant
4Q	4 quadrant
IR	Initial rounding
FR	Final rounding
CU_DC	Control Unit DC
DC_CTRL	DC drive control
RUT	Rampup time
Ia	Actual armature current value
IAlimit	Current limit
If	Actual field current value
ILG	Current at critical conduction
In	Rated current
Kp	P gain
La	Armature circuit inductance
Mlimit	Torque limit
Mact	Actual torque value
n	Speed
nact	Actual speed value
nmin	Minimum speed
NN	Normal zero
nsetp	Speed setpoint
Ra	Armature circuit resistance
RDT	Ramp-down time
Tn	Integral time
TSE	(Engl.: Snubber)
Tu	Ambient temperature
Ua	Armature voltage
Uf	Field voltage
ULine	Line voltage
USS	Universal serial interface
SICROWBAR	Overvoltage protection

A.3 Environmental compatibility

Environmental aspects during development

The use of highly-integrated components has enabled the number of parts to be kept to a minimum, with energy being used as efficiently as possible during production as a result.

Particular emphasis has been placed on ensuring that the metal and plastic parts have a low volume and low weight, and that the number of different types is kept to a minimum.

Front parts:	PC + ABS	Bayblend	Bayer
Plastic parts in the device:	PC	Lexan 915-R	
Insulation materials:	PC (FR) fl	Makrolon or Lexan	
Rating plate:	Polyester film		

Pollutant-free materials have been used for all significant parts. Insulation materials containing silicone are not used. Materials containing halogens are only present to a slight extent (cable insulation in the SINAMICS DCM Control Module).

All materials meet ROHS criteria.

Environmental compatibility was a key criterion in selecting supplier parts.

Environmental aspects during production

The packaging material can be recycled and consists mainly of cardboard.

With the exception of the enclosure, no surface coatings have been used.

The production processes do not produce any emissions.

Environmental aspects for disposal



For environmentally friendly recycling and disposal of your old device, please contact a company certified for the disposal of old electrical and electronic devices and dispose of the device in accordance with the regulations in your country.

The device features screw-in and snap-in connections that can be easily released in order to separate it into different mechanical components for recycling purposes.

The printed circuit boards may be used in recycling processes involving energy recovery. The proportion of components containing hazardous substances is low.

A.4 Servicing

Repairs

If you wish to have a part or unit repaired, please get in touch with your regional contact for repairs.

Service calls

Qualified personnel can perform repair work on your devices and offer services that ensure their availability. This work can be carried out with charges that are scaled according to the amount of time and work involved, or at a flat rate as part of a contract. Services whose

charges depend on the amount of time and work involved are performed within the normal working hours for the region and with an appropriate response time.

You can get in touch with your regional contact if you wish to have any services carried out.

Note

We would be grateful if you could specify the following device data when you have any queries:

- Device article number and serial number
- Firmware version
- Hardware version of the electronics module CUD (printed on the component side)
- Hardware version and firmware version of additional modules (if used)

Appendix B

B

B.1 Runtimes of the DCC blocks for SINAMICS DCM

The typical runtimes of the DCC blocks (in µs) are listed in the following table.

Table B-1 DCC blocks on the SINAMICS DCM

Designation	Function	Typ. runtime	Group
ADD	Adder (REAL type)	8	Arithmetic
ADD_D	Adder (double integer type)	7	
ADD_I	Adder (integer type)	7	
ADD_M	Modulo adder for addition in correct axis cycle	8	
AVA	Absolute value generator with sign evaluation	6	
AVA_D	Absolute value generator (double integer)	6	
DIV	Divider (REAL type)	9	
DIV_D	Divider (double integer type)	7	
DIV_I	Divider (integer type)	7	
MAS	Maximum evaluator	7	
MIS	Minimum evaluator	8	
MUL	Multiplier	7	
MUL_D	Multiplier (double integer type)	7	
MUL_I	Multiplier (integer type)	7	
PLI20	Polyline, 20 break points	9	
SII	Inverter	6	
SUB	Subtractor	6	
SUB_D	Subtractor (double integer type)	6	
SUB_I	Subtractor (integer type)	5	
DEL	Dead zone element	6	Closed Loop Control
DEZ	Dead zone element	6	
DIF	Derivative-action element	7	
DT1	Smoothing element	8	
INT	Integrator	8	
LIM	Limiter (REAL type)	6	
LIM_D	Limiter (DOUBLE type)	6	
MVS	Sliding-type mean value generator	8	
PC	P controller	9	
PIC	PI controller	10	
PT1	Delay element	7	
RGE	Ramp-function generator	12	
RGJ	Ramp-function generator with jerk limiting	78	

Designation	Function	Typ. runtime	Group
BY_W	Status byte to status word converter	14	Conversion
B_DW	Converter 32 binary variables to status double word	10	
B_W	Converter 16 binary variables to status word	6	
DW_B	Converter status double word to 32 binary variables	6	
DW_R	Accepting bit string as real value	5	
DW_W	Status double word to status word converter	6	
D_I	DOUBLE INTEGER to INTEGER converter	6	
D_R	DOUBLE INTEGER to REAL converter	7	
D_UI	DOUBLE INTEGER to UNSIGNED INTEGER converter	6	
D_US	DOUBLE INTEGER to UNSIGNED SHORT INTEGER converter	6	
I_D	INTEGER to DOUBLE INTEGER converter	6	
I_R	INTEGER to REAL converter	6	
I_UD	INTEGER to UNSIGNED DOUBLE INTEGER converter	6	
I_US	INTEGER to UNSIGNED SHORT INTEGER converter	6	
N2_R	Converting 16-bit fixed-point format (N2) to REAL	7	
N4_R	Converting 32-bit fixed-point format (N4) to REAL	6	
R_D	REAL to DOUBLE INTEGER converter	6	
R_DW	Bit string transfer as WORD	6	
R_I	REAL to INTEGER converter	6	
R_N2	Converting REAL to 16-bit fixed-point format (N2)	6	
R_N4	Converting REAL to 32-bit fixed-point format (N4)	6	
R_UD	REAL to UNSIGNED DOUBLE INTEGER converter	6	
R_UI	REAL to UNSIGNED INTEGER converter	6	
R_US	REAL to UNSIGNED SHORT INTEGER converter	5	
UD_I	INTEGER DOUBLE INTEGER to INTEGER converter	5	
UD_R	UNSIGNED DOUBLE INTEGER to REAL converter	6	
UI_D	UNSIGNED INTEGER to DOUBLE INTEGER converter	6	
UI_R	UNSIGNED INTEGER to REAL converter	6	
US_D	UNSIGNED-SHORT-INTEGER to DOUBLE INTEGER converter	6	
US_I	UNSIGNED-SHORT-INTEGER to INTEGER converter	5	
US_R	UNSIGNED-SHORT-INTEGER to REAL converter	5	
W_B	Converter, status word to 16 binary variables	5	
W_BY	Status word to status byte converter	5	
W_DW	Status word to status double word converter	6	

Designation	Function	Typ. run-time	Group
AND	BOOL type	7	Logic
BF	Flash function BOOL	12	
BSW	Binary change-over switch (BOOL type)	5	
CNM	Controllable numeric memory (REAL type)	6	
CNM_D	Controllable numeric memory (double integer type)	6	
CNM_I	Controllable numeric memory (integer type)	6	
CTR	Counter (BOOL type)	7	
DFR	Reset-dominant D-type flip-flop (BOOL type)	6	
DLB	Delay element (REAL type)	7	
DX8	Demultiplexer, 8 outputs, (REAL type)	6	
DX8_D	Demultiplexer, 8 outputs, (DOUBLE INTEGER type)	14	
DX8_I	Demultiplexer, 8 outputs, (INTEGER type)	13	
ETE	Edge evaluator (BOOL type)	6	
LVM	Double-sided limit monitor with hysteresis (BOOL type)	7	
MFP	Pulse generator (BOOL type)	6	
MUX8	Multiplexer, cascadable (BREAL type)	6	
MUX8_D	Multiplexer, cascadable (DOUBLE INTEGER type)	12	
MUX8_I	Multiplexer, cascadable (INTEGER type)	13	
NAND	Block (BOOL type)	7	
NCM	Numeric comparator (REAL type)	6	
NCM_D	Numeric comparator (DOUBLE INTEGER type)	5	
NCM_I	Numeric comparator (INTEGER type)	6	
NOP1	Dummy block (REAL type)	5	
NOP1_B	Dummy block (BOOL type)	5	
NOP1_D	Dummy block (DOUBLE INTEGER type)	4	
NOP1_I	Dummy block (INTEGER type)	6	
NOP8	Dummy blocks (REAL type)	8	
NOP8_B	Dummy blocks (BOOL type)	8	
NOP8_D	Dummy blocks (DOUBLE INTEGER type)	8	
NOP8_I	Dummy blocks (INTEGER type)	8	
NOR	Block (BOOL type)	7	
NOT	Inverter (BOOL type)	5	
NSW	Numeric change-over switch (REAL type)	6	
NSW_D	Numeric change-over switch (DOUBLE INTEGER type)	5	
NSW_I	Numeric change-over switch (INTEGER type)	6	
OR	(BOOL type)	7	
PCL	Pulse shortening device (BOOL type)	6	
PDE	Closing delay device (BOOL type)	5	
PDF	Breaking delay device (BOOL type)	6	
PST	Pulse stretching device (BOOL type)	6	
RSR	RS flip-flop, R-dominant (BOOL type)	6	

Designation	Function	Typ. run-time	Group
RSS	RS flip-flop, S-dominant (BOOL type)	6	
SH_DW	Shift block (DWORD type)	6	
TRK	Tracking/memory element (REAL type)	6	
TRK_D	Tracking/memory element (WORD type)	6	
XOR	Block (BOOL type)	6	
RDP	Reading drive parameters (REAL type)	14	System
RDP_D	Reading drive parameters (DOUBLE type)	14	
RDP_I	Reading drive parameters (INTEGER type)	15	
RDP_UD	Reading drive parameters (UNSIGNED DOUBLE INTEGER type)	15	
RDP_UI	Reading drive parameters (UNSIGNED INTEGER type)	16	
RDP_US	Reading drive parameters (UNSIGNED SHORT INTEGER type)	15	
SAH	Sample and hold (REAL type)	23	
SAH_B	Sample and hold (BOOL type)	23	
SAH_BY	Sample and hold (BYTE type)	24	
SAH_D	Sample and hold (DOUBLE type)	24	
SAH_I	Sample and hold (INTEGER type)	24	
SAV	Value buffering (REAL type)	5	
SAV_BY	Value buffering (BYTE type)	6	
SAV_D	Value buffering (DOUBLE type)	6	
SAV_I	Value buffering (INTEGER type)	6	
STM	Fault/alarm trigger	41	
WRP	Writing drive parameters (REAL type)	17	
WRP_D	Writing drive parameters (DOUBLE type)	13	
WRP_I	Writing drive parameters (INTEGER type)	17	
WRP_UD	Writing drive parameters (UNSIGNED DOUBLE INTEGER type)	18	
WRP_UI	Writing drive parameters (UNSIGNED INTEGER type)	16	
WRP_US	Writing drive parameters (UNSIGNED SHORT INTEGER type)	17	
DCA	Diameter calculator	16	Technology
INCO	Axial winder moment of inertia	51	
TTCU	Winding characteristic	25	
OCA	Software cam group	8	
WBG	Wobble generator	50	

B.2 BOP20 status display during power-up

During power-up, the status of the power-up is briefly displayed on the BOP20.

Table B-2 Display of the power-up on the BOP20

Displayed value	Meaning
0	Operation
10	Ready for operation
20	Wait for power-up
25	Wait for automatic firmware update of DRIVE-CLiQ components
31	Commissioning software download active
33	Remove/acknowledge topology error
34	End commissioning mode
35	Perform the first commissioning
70	Initialization
80	Reset active
99	Internal software error

The states listed are automatically run through during the commissioning and are normally not visible.

In the following exceptional cases, power-up is interrupted with display value 33. In this state, the device can be parameterized using BOP20, AOP30 and STARTER:

- Differences have been identified between the reference and actual topology.
  - Correct the topology (e.g. re-insert the TM component)
  - Accept the actual topology into the reference topology by setting p9905 = 1 or p9905 = 2. Ramp-up is continued.
- A memory card with a parameter data set, which comes from a SINAMICS DCM with a different article number is inserted in the drive
  - Accept the parameter data set by setting p9906 = 3. Ramp-up is continued.
- A memory card with a parameter data set from another CUD type is inserted in the drive (e.g. a parameter data set from the right-hand CUD was loaded into a left-hand CUD, a parameter data set of a standard CUD was loaded into an advanced CUD)
  - Accept the parameter data set by setting p9906 = 3. Ramp-up is continued.

Appendix C

C

C.1 Standards and regulations relating to functional safety

C.1.1 General information

C.1.1.1 Aims

Manufacturers and operating companies of equipment, machines, and products are responsible for ensuring the required level of safety. This means that plants, machines, and other equipment must be designed to be as safe as possible in accordance with the current state of the art. For this purpose, companies describe in the various standards the current state of the art covering all aspects relevant to safety. If it can be justifiably assumed that all of the relevant standards are complied with, this ensures that state-of-the-art technology has been utilized and, in turn, a plant builder or a manufacturer of a machine or a piece of equipment has fulfilled his appropriate responsibility.

Safety systems are designed to minimize potential hazards for both people and the environment by means of suitable technical equipment, without restricting industrial production and the use of machines more than is necessary. The protection of man and environment must be assigned equal importance in all countries based on internationally harmonized rules and regulations. This is also intended to avoid competitive advantages or disadvantages due to different safety requirements in different countries.

There are different concepts and requirements in the various regions and countries of the world when it comes to ensuring the appropriate degree of safety. The legislation and the requirements of how and when proof is to be given and whether there is an adequate level of safety are just as different as the assignment of responsibilities.

The most important thing for manufacturers of machines and companies that set up plants and systems is that the legislation and regulations in the country where the machine or plant is being operated apply. For example, the control system for a machine that is to be used in the US must fulfill local US requirements even if the machine manufacturer (OEM) is based in the European Economic Area (EEA).

C.1.1.2 Functional safety

Safety, from the perspective of the object to be protected, cannot be split-up. The causes of hazards and, in turn, the technical measures to avoid them can vary significantly. This is why a differentiation is made between different types of safety (e.g. by specifying the cause of possible hazards). "Functional safety" is involved if safety depends on the correct function.

To ensure the functional safety of a machine or plant, the safety-related parts of the protection and control devices must function correctly. In addition, the systems must behave in such a way that either the plant remains in a safe state or it is brought into a safe state if a fault occurs. In this case, it is necessary to use specially qualified technology that fulfills

the requirements described in the associated Standards. The requirements to implement functional safety are based on the following basic goals:

- Avoiding systematic faults
- Controlling random faults or failures

Benchmarks for establishing whether or not a sufficient level of functional safety has been achieved include the probability of hazardous failures, the fault tolerance, and the quality that is to be ensured by avoiding systematic faults. This is expressed in the standards using specific classification. In IEC/EN 61508, IEC/EN 62061 "Safety Integrity Level" (SIL) and EN ISO 13849-1 "Category" and "Performance Level" (PL).

C.1.2 Safety of machinery in Europe

The EU Directives that apply to the implementation of products are based on Article 95 of the EU contract, which regulates the free exchange of goods. This is based on a new global concept ("new approach", "global approach"):

- EU Directives only specify general safety goals and define basic safety requirements.
- Technical details can be defined based on standards by Standards Associations that have the appropriate mandate from the Commission of the European Parliament and Council (CEN, CENELEC). These Standards are harmonized under a specific Directive and are listed in the Official Journal of the Commission of the European Parliament and the Council. Legislation does not specify that certain standards have to be complied with. When the harmonized Standards are observed, it can be assumed that the safety requirements and specifications of the Directives involved have been fulfilled.
- EU Directives specify that the Member States must mutually recognize domestic regulations.

The EU Directives are equal. This means that if several Directives apply for a specific piece of equipment or device, the requirements of all of the relevant Directives apply (e.g. for a machine with electrical equipment, the Machinery Directive and the Low-Voltage Directive apply).

C.1.2.1 Machinery Directive

The basic safety and health requirements specified in Annex I of the Directive must be fulfilled for the safety of machines.

The protective goals must be implemented responsibly to ensure compliance with the Directive.

Manufacturers of a machine must verify that their machine complies with the basic requirements. This verification is facilitated by means of harmonized standards.

IEC 61800-5-2 Adjustable-speed electrical power drive systems Part 5-2 is relevant for the Machinery Directive: Safety requirements - Functional safety

Within the context of IEC 61508, IEC 61800-5-2 considers adjustable speed electric power drive systems (PDS), which are suitable for use in safety-related applications (PDS(SR)).

IEC 61800-5-2 places demands on PDS(SR) as subsystems of a safety-related system. This therefore permits the implementation of the electrical/electronic/programmable electronic

elements of a PDS(SR) taking into account the safety-relevant performance of the safety function(s) of a PDS.

Manufacturers and suppliers of PDS(SR) can prove to users (e.g. integrators of control systems, developers of machines and plants etc.) the safety-relevant performance of their equipment by implementing the specifications stipulated in standard IEC 61800-5-2.

C.1.2.2 Harmonized European Standards

The two Standards Organizations CEN (Comité Européen de Normalisation) and CENELEC (Comité Européen de Normalisation Électrotechnique), mandated by the EU Commission, drew-up harmonized European standards in order to precisely specify the requirements of the EC directives for a specific product. These standards (EN standards) are published in the official journal of the commission of the European Parliament and Council and must be included without revision in domestic standards. They are designed to fulfill basic health and safety requirements as well as the protective goals specified in Annex I of the Machinery Directive.

When the harmonized standards are observed, it is "automatically assumed" that the Directive is fulfilled. As such, manufacturers can assume that they have observed the safety aspects of the Directive under the assumption that these are also covered in this standard. However, not every European Standard is harmonized in this sense. Key here is the listing in the official journal of the commission of the European Parliament and Council.

The European Safety of Machines standard is hierarchically structured. It is divided into:

- A standards (basic standards)
- B standards (group standards)
- C standards (product standards)

Type A standards/basic standards

A standards include basic terminology and definitions relating to all types of machine. This also includes EN ISO 12100 "Safety of machines, basic terminology, general design guidelines".

A standards are aimed primarily at the bodies responsible for setting the B and C standards. The measures specified here for minimizing risk, however, may also be useful for manufacturers if no applicable C standards have been defined.

Type B standards/group standards

B standards cover all safety-related standards for various different machine types. B standards are aimed primarily at the bodies responsible for setting C standards. They can also be useful for manufacturers during the machine design and construction phases if no applicable C standards have been defined.

A further subdivision has been made for B standards, and more precisely:

- Type B1 standards for higher-level safety aspects (e.g. ergonomic principles, safety clearances from sources of danger, minimum clearances to prevent parts of the body from being crushed).
- Type B2 standards for protective safety devices are defined for different machine types (e.g. EMERGENCY STOP devices, two-hand operating circuits, interlocking elements, contactless protective devices, safety-related parts of controls).

Type C standards/product standards

C standards are product-specific standards (e.g. for machine tools, woodworking machines, elevators, packaging machines, printing machines etc.). Product standards cover machine-specific requirements. Under certain circumstances, the requirements can deviate from the basic and group standards. Type C/product standards have the highest priority for machine manufacturers who can assume that it fulfills the basic requirements of Annex I of the Machinery Directive (automatic presumption of compliance). If no product standard has been defined for a particular machine, type B standards can be applied when the machine is being constructed.

A complete list of the standards specified and the mandated draft standards are available on the Internet at the following address:

Standards (http://www.newapproach.org/)

Recommendation: Due to the rapid pace of technical development and the associated changes in machine concepts, the standards (and type C standards in particular) should be checked to ensure that they are up to date. Please note that the application of a particular standard may not be mandatory provided that all safety requirements of the applicable EU directives are complied with.

C.1.2.3 Standards for implementing safety-related controllers

If the functional safety of a machine depends on various control functions, the controller must be implemented in such a way that the probability of safety functions failing in a dangerous fashion is sufficiently minimized. Standards EN ISO 13849-1 and IEC 61508 define principles for implementing safety-related machine controls, which, when properly applied, ensure that all the safety requirements of the EC Machinery Directive are fulfilled. These standards ensure that the relevant safety requirements of the Machinery Directive are fulfilled.

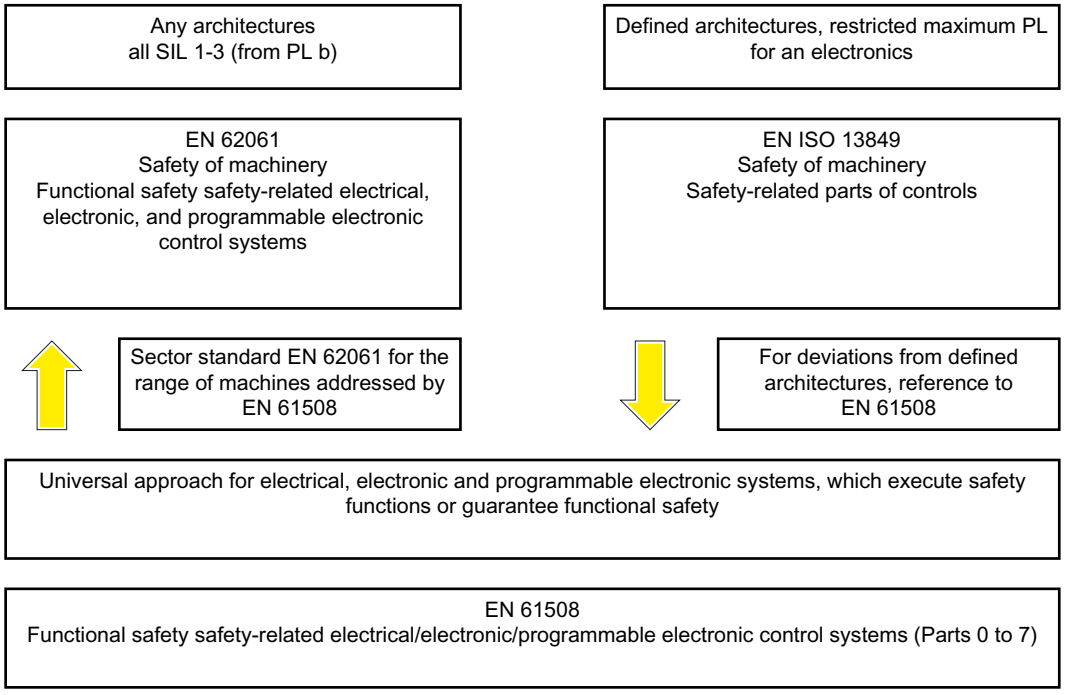

Figure C-1 Standards for implementing safety-related controllers

The application areas of EN ISO 13849-1, EN 62061, and EN 61508 are very similar. To help users make an appropriate decision, the IEC and ISO associations have specified the application areas of both standards in a joint table in the introduction to the standards. EN ISO 13849-1 or EN 62061 should be applied depending on the technology (mechanics, hydraulics, pneumatics, electrics, electronics, programmable electronics), risk classification and architecture.

Further, Standard IEC 61800-5-2 is applicable for variable-speed electric drives with integrated safety functions. IEC 61800-5-2 defines requirements and gives recommendations for designing and developing, integrating and validating safety-related applications regarding their functional safety. IEC 61800-5-2 is applicable for adjustable speed electric power drive systems, which are handled in other parts of IEC 61800 standards.

	Systems for executing safety-related control functions	**EN ISO 13849-1**	**EN 62061**
A	Non-electrical (e.g. hydraulic, pneumatic)	X	Not covered
B	Electromechanical (e.g. relays and/or basic electronics)	Restricted to the designated architectures (see Remark 1) and max. up to PL = e	All architectures and max. up to SIL 3
C	Complex electronics (e.g. programmable electronics)	Restricted to the designated architectures (see Remark 1) and max. up to PL = d	All architectures and max. up to SIL 3
D	A standards combined with B standards	Restricted to the designated architectures (see Remark 1) and max. up to PL = e	X See comment 3
E	C standards combined with B standards	Restricted to the designated architectures (see Remark 1) and max. up to PL = d	All architectures and max. up to SIL 3
F	C standards combined with A standards or C standards combined with A standards and B standards	X See comment 2	X See comment 3

"X" indicates that the point is covered by this standard.

Remark 1:
Designated architectures are described in Annex B of EN ISO 13849-1 and provide a simplified basis for the quantification.

Comment 2:
For complex electronics: Using designated architectures in compliance with EN ISO 13849-1 up to PL = d or every architecture in compliance with EN 62061.

Comment 3:
For non-electrical systems: Use components that comply with EN ISO 13849-1 as sub-systems.

C.1.2.4 DIN EN ISO 13849-1

A qualitative analysis according to DIN EN 13849-1 is not sufficient for modern control systems due to their technology. Among other things, DIN EN ISO 13849-1 does not take into account time response (e.g. test interval and/or cyclic test, lifetime). This results in the probabilistic approach in DIN EN ISO 13849-1 (probability of failure per unit time).

DIN EN ISO 13849-1 considers complete safety functions and all the devices required to execute these. With DIN EN ISO 13849-1, safety functions are considered from both a qualitative as well as a quantitative perspective. Performance levels (PL), which are based

on specific categories, are used. The following safety-related characteristic quantities are required for devices/equipment:

- Category (structural requirement)
- PL: Performance level
- $MTTF_d$: Mean time to dangerous failure
- DC: Diagnostic coverage
- CCF:
  Common cause failure

The standard describes how the performance level (PL) is calculated for safety-related components of the controller on the basis of designated architectures. For deviations from this, DIN EN ISO 13849-1 refers to IEC 61508.

When combining several safety-related parts to form a complete system, the standard explains how to determine the resulting PL.

Note

DIN EN ISO 13849-1 and machinery directive

Since May 2007, DIN EN ISO 13849-1 has been harmonized as part of the Machinery Directive.

C.1.2.5 IEC 62061

IEC 62061 is a sector-specific standard, positioned below IEC 61508. It describes the implementation of safety-related electrical control systems of machines and takes into account the complete lifecycle - from the conceptual phase to de-commissioning. The standard is based on the quantitative and qualitative analyses of safety functions,

whereby it systematically applies a top-down approach to implementing complex control systems (known as "functional decomposition"). The safety functions derived from the risk analysis are sub-divided into sub-safety functions, which are then assigned to real devices, sub-systems, and sub-system elements. Both the hardware and software are covered.
IEC 62061 also describes the requirements placed on implementing application programs.

A safety-related control systems comprises different sub-systems. From a safety perspective, the sub-systems are described in terms of the SIL claim limit and PFH_D characteristic quantities.

Programmable electronic devices (e.g. PLCs or variable-speed drives) must fulfill IEC 61508. They can then be integrated in the controller as sub-systems. The following safety-related characteristic quantities must be specified by the manufacturers of these devices.

Safety-related characteristic quantities for subsystems:

- SIL CL: SIL claim limit
- PFH_D:
  Probability of dangerous failures per hour
- T1:
  Lifetime

Simple sub-systems (e.g. sensors and actuators) in electromechanical components can, in turn, comprise sub-system elements (devices) interconnected in different ways with the characteristic quantities required for determining the relevant PFH_D value of the sub-system.

Safety-related characteristic quantities for subsystem elements (devices):

- λ:
  Failure rate
- B10 value: For elements that are subject to wear
- T1:
  Lifetime

For electromechanical devices, a manufacturer specifies a failure rate λ with reference to the number of operating cycles. The failure rate per unit time and the lifetime must be determined using the switching frequency for the particular application.

Parameters for the sub-system, which comprises sub-system elements, that must be defined during the design phase:

- T2:
  Diagnostic test interval
- β:
  Sensitivity to common cause failure
- DC:
  Diagnostic coverage

The PFH_D value of the safety-related controller is determined by adding the individual PFH_D values for subsystems.

The user has the following options when setting up a safety-related controller:

- Use devices and sub-systems that already comply with EN ISO 13849-1, IEC 61508 or IEC 62061. The standard provides information specifying how qualified devices can be integrated when safety functions are implemented.
- Develop own subsystems:
  - Programmable, electronic systems and complex systems: Application of IEC 61508 or IEC 61800-5-2.
  - Simple devices and subsystems: Application of IEC 62061.

IEC 62061 does not include information about non-electric systems. The standard provides detailed information on implementing safety-related electrical, electronic, and programmable electronic control systems. DIN EN ISO 13849-1 must be applied for non-electrical systems.

Note

Function examples

Details of simple sub-systems that have been implemented and integrated are now available as "functional examples".

Note

IEC 62061 and Machinery Directive

IEC 62061 has been ratified as EN 62061 in Europe and harmonized as part of the Machinery Directive.

C.1.2.6 Series of standards IEC 61508 (VDE 0803)

This series of standards describes the current state of the art.

IEC 61508 is not harmonized in line with any EU directives, which means that an automatic presumption of conformity for fulfilling the protective requirements of a directive is not implied. However, the manufacturer of a safety-related product can also use IEC 61508 to fulfill basic requirements of European directives in accordance with the latest conceptual design, for example, in the following cases:

- If no harmonized standard exists for the application in question. In this particular case, the manufacturer may use IEC 61508. although no presumption of conformity exists here.
- Reference is made to IEC 61508 from a harmonized European standard (e.g. EN 62061, EN ISO 13849, IEC 60204-1). This ensures that the appropriate requirements of the directives are fulfilled ("standard that is also applicable"). When manufacturers apply IEC 61508 properly and responsibly in accordance with this reference, they can use the presumption of conformity of the referencing standard.

IEC 61508 covers all the aspects that must be taken into account when E/E/PES systems (**e**lectrical, **e**lectronic, and **p**rogrammable **e**lectronic **s**ystem) are used in order to execute safety functions and/or to ensure the appropriate level of functional safety. Other hazards (e.g. electric shock) are not part of the standard, similar to DIN EN ISO 13849.

IEC 61508 has recently been declared the "International Basic Safety Publication", which makes it a framework for other sector-specific standards (e.g. EN 62061). As a result, this standard is now accepted worldwide, particularly in North America and in the automotive industry. Today, many regulatory bodies already stipulate it (e.g. as a basis for NRTL listing).

Another recent development with respect to IEC 61508 is its system approach, which extends the technical requirements to include the entire safety installation from the sensor to the actuator, the quantification of the probability of hazardous failure due to random hardware failures, and the creation of documentation covering all phases of the safety-related lifecycle of the E/E/PES.

C.1.2.7 Risk analysis/assessment

Risks are intrinsic in machines due to their design and functionality. For this reason, the Machinery Directive requires that a risk assessment be performed for each machine and, if necessary, the level of risk reduced until the residual risk is less than the tolerable risk. To assess these risks, the following standards must be applied:

- EN ISO 12100 "Safety of Machinery - General Design Principles - Risk Assessment and Minimizing Risks"
- EN ISO 13849-1 "Safety-related parts of control systems"

EN ISO 12100 focuses on the risks to be analyzed and the design principles for minimizing risk.

The risk assessment is a procedure that allows hazards resulting from machines to be systematically investigated. Where necessary, the risk assessment is followed by a risk reduction procedure. When the procedure is repeated, this is known as an iterative process. This can help eliminate hazards (as far as this is possible) and can act as a basis for implementing suitable protective measures.

The risk assessment involves the following points:

- Risk analysis
  - Determination of the limits of the machine (EN ISO 12100)
  - Identification of hazards (EN ISO 12100)
- Risk evaluation

As part of the iterative process to achieve the required level of safety, a risk evaluation is carried out after risk estimation. A decision must be made here as to whether the residual risk needs to be reduced. If the risk is to be further reduced, suitable protective measures must be selected and applied. The risk assessment must then be repeated.

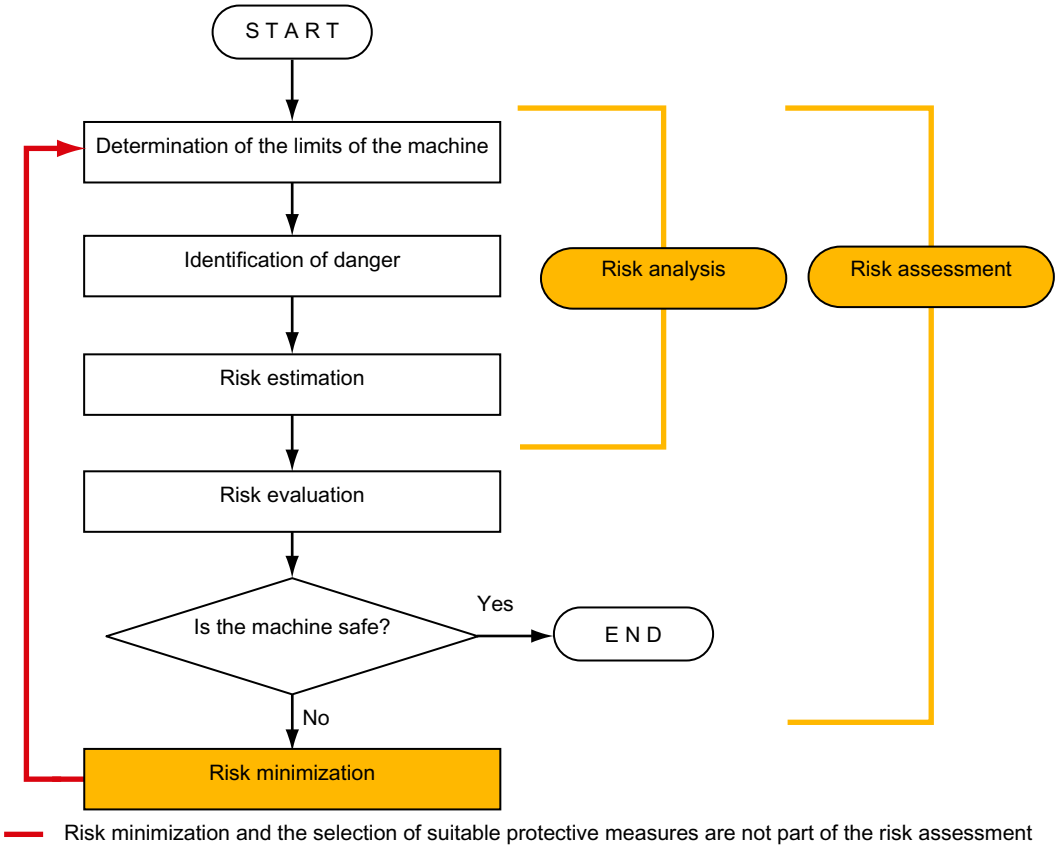

Figure C-2 Iterative process for achieving safety

Risks must be reduced by designing and implementing the machine accordingly (e.g. by means of controls or protective measures suitable for the safety-related functions).

If the protective measures involve the use of interlocking or control functions, these must be designed according to EN ISO 13849-1. For electrical and electronic control systems, EN 62061 can be applied instead of EN ISO 13849-1. Electronic controls and bus systems must also comply with IEC 61508.

C.1.2.8 Risk minimization

Risk minimization measures for a machine can be implemented by means of safety-related control functions in addition to structural measures. To implement these control functions, special requirements, graded according to the magnitude of the risk, must be taken into account. These are described in EN ISO 13849-1 or, in the case of electrical controllers (particularly programmable electronics), in EN 61508 or EN 62061. The requirements regarding safety-related controller components are graded according to the magnitude of the risk and the level to which the risk needs to be reduced.

EN ISO 13849-1 defines a risk flow chart that instead of categories results in hierarchically graduated Performance Levels (PL).

IEC/EN 62061 uses "Safety Integrity Level" (SIL) for classification purposes. This is a quantified measure of the safety-related performance of a controller. The required SIL is also determined in accordance with the risk evaluation principle according to ISO 12100. Annex A of the standard describes a method for determining the required Safety Integrity Level (SIL).

Regardless of which standard is applied, steps must be taken to ensure that all the machine controller components required for executing the safety-related functions fulfill these requirements.

C.1.2.9 Residual risk

In today's technologically advanced world, the concept of safety is relative. The ability to ensure safety to the extent that risk is ruled out in all circumstances – "zero-risk guarantee" – is practically impossible. The residual risk is the risk that remains once all the relevant protective measures have been implemented in accordance with the latest state of the art.

Residual risks must be clearly referred to in the machine/plant documentation (user information according to EN ISO 12100).

C.1.2.10 EC declaration of conformity

The EC Declaration of Conformity for the product can be obtained on the Internet at:

EC declaration of conformity (https://support.industry.siemens.com/cs/ww/en/view/67385845)

C.1.3 Machine safety in the USA

A key difference between the USA and Europe in the legal requirements regarding safety at work is that, in the USA, no legislation exists regarding machinery safety that is applicable in all of the states and that defines the responsibility of the manufacturer/supplier. A general requirement exists stating that employers must ensure a safe workplace.

For more information, refer to the following sections:

- Minimum requirements of the OSHA (Page 729)
- NRTL listing (Page 729)
- NFPA 79 (Page 730)
- ANSI B11 (Page 730)

C.1.3.1 Minimum requirements of the OSHA

The Occupational Safety and Health Act (OSHA) from 1970 regulates the requirement that employers must offer a safe place of work. The core requirements of OSHA are specified in Section 5 "Duties".

The requirements of the OSH Act are managed by the "Occupational Safety and Health Administration" (also known as OSHA). OSHA employs regional inspectors who check whether or not workplaces comply with the applicable regulations.

The OSHA regulations are described in OSHA 29 CFR 1910.xxx ("OSHA Regulations (29 CFR) PART 1910 Occupational Safety and Health"). (CFR: Code of Federal Regulations.)

OSHA (http://www.osha.gov)

The application of standards is regulated in 29 CFR 1910.5 "Applicability of standards". The concept is similar to that used in Europe. Product-specific standards have priority over general standards insofar as they cover the relevant aspects. Once the standards are fulfilled, employers can assume that they have fulfilled the core requirements of the OSH Act with respect to the aspects covered by the standards.

In conjunction with certain applications, OSHA requires that all electrical equipment and devices that are used to protect workers be authorized by an OSHA-certified, "Nationally Recognized Testing Laboratory" (NRTL) for the specific application.

In addition to the OSHA regulations, the current standards defined by organizations such as NFPA and ANSI must be carefully observed and the extensive product liability legislation that exists in the US taken into account. Due to the product liability legislation, it is in the interests of manufacturing and operating companies that they carefully maintain the applicable regulations and are "forced" to fulfill the requirement to use state-of-the-art technology.

Third-party insurance companies generally demand that their customers fulfill the applicable standards of the standards organizations. Self-insured companies are not initially subject to this requirement but, in the event of an accident, they must provide verification that they have applied generally-recognized safety principles.

C.1.3.2 NRTL listing

All electrical equipment and devices that are used in the US to protect workers must be certified for the particular application by a "Nationally Recognized Testing Laboratory" (NRTL) certified by OSHA. Nationally recognised testing laboratories (NRTLs) are authorized to certify equipment and material by means of listing, labeling or similar. Domestic standards (e.g. NFPA 79) and international standards (e.g. IEC/EN 61508 for E/E/PES systems) are the basis for testing.

C.1.3.3 NFPA 79

Standard NFPA 79 (Electrical Standard for Industrial Machinery) applies to electrical equipment on industrial machines with rated voltages of less than 600 V. A group of machines that operate together in a coordinated fashion is also considered to be one machine.

For programmable electronics and communication buses, NFPA 79 states as a basic requirement that these must be listed if they are to be used to implement and execute safety-related functions. If this requirement is fulfilled, then electronic controls and communication buses can also be used for Emergency Stop functions, Stop Categories 0 and 1 (refer to NFPA 79 9.2.5.4.1.4). Just the same as IEC 60204-1, NFPA 79 no longer specifies that the electrical energy must be disconnected by electromechanical means for emergency stop functions.

The core requirements regarding programmable electronics and communication buses in accordance with NFPA 79 9.4.3:

1. Control systems that contain software-based controllers must:
   - In the event of a single fault,
     (a) Initiate that the system is shut down and goes into a safe state
     (b) Prevent the system from restarting until the fault has been rectified
     (c) Prevent an unexpected start
   - Offer the same level of protection as hard-wired controllers
   - Be implemented in accordance with a recognized standard that defines the requirements for such systems.
2. IEC 61508, IEC 62061, ISO 13849-1, ISO 13849-2, IEC 61800-5-2 are specified as suitable standards in a note.

Underwriter Laboratories Inc. (UL) has defined a special category for "Programmable Safety Controllers" for implementing this requirement (code NRGF). This category covers control devices that contain software and are designed for use in safety-related functions.

A precise description of the category and a list of devices that fulfill this requirement can be found on the Internet at the following address:

NRGF (http://www.ul.com) → Online Certifications Directory → UL Category code/Guide information → search for category "NRGF"

TUV Rheinland of North America, Inc. is also an NRTL for these applications.

C.1.3.4 ANSI B11

ANSI B11 standards are joint standards developed by associations such as the Association for Manufacturing Technology (AMT) and the Robotic Industries Association (RIA).

The hazards of a machine are evaluated based on a risk analysis/assessment. The risk analysis is an important requirement in accordance with NFPA 79, ANSI/RIA 15.06, ANSI B11.TR-3 and SEMI S10 (semiconductors). The documented results of a risk analysis can be used to select a suitable safety system based on the safety class of the application in question.

C.1.4 Machine safety in Japan

The situation in Japan is different from that in Europe and the US. Legislation such as that prescribed in Europe does not exist. Similarly, product liability does not play such an important role as it does in the US.

Instead of legal requirements to apply standards have been defined, an administrative recommendation to apply JIS (Japanese Industrial Standard) is in place. Japan bases its approach on the European concept and uses basic standards as national standards:

Table C-1 Japanese standards

ISO/IEC number	JIS number	Remark
ISO12100	JIS B 9700, JIS B 9702	Earlier designation TR B 0008 and TR B 0009
ISO13849-1	JIS B 9705-1	-
ISO13849-2	JIS B 9705-1	-
IEC 60204-1	JIS B 9960-1	Without annex F or route map of the European foreword
IEC 61508-0 to -7	JIS C 0508	-
IEC 62061	-	JIS number not yet assigned

C.1.5 Equipment regulations

In addition to the requirements laid down in guidelines and standards, company-specific requirements must be taken into account. Large corporations in particular (e.g. vehicle manufacturers) have stringent demands regarding automation components, which are often listed in their own equipment specifications.

Safety-related issues (e.g. operating modes, operator actions with access to hazardous areas, Emergency Stop concepts, etc.) should be clarified with customers early on so that they can be integrated in the risk assessment/risk reduction process.

C.1.6 Other safety-related issues

C.1.6.1 Information sheets from the various regulatory bodies

Safety-related measures to be implemented cannot always be derived from directives, standards or regulations. In this case, supplementary information and explanations are required.

Some regulatory bodies issue publications on an extremely wide range of subjects.

Note

These publications are in German. In some instances, they are also available in English and French.

These information sheets issued by specialist committees can be obtained by all interested parties (e.g. to provide support in factories, or when regulations or safety-related measures

for plants and machines are defined). These information sheets provide support for the fields of machinery construction, production systems, and steel construction.

You can download the information sheets from the Internet address (http://www.bghm.de/).

C.1.6.2 Additional references

- Safety Integrated - Introduction and Terminology for Functional Safety of Machines and Systems (02/2021 edition); article no. E86060-T1813-A101-A7
- Safety Integrated, The Safety Program for Industries of the World (5th Edition and Supplement):
  The Safety Program for World Industries (https://support.industry.siemens.com/cs/de/en/view/28813929)

Index

3

3U1, 3W1, 3C, 3D, 139

A

A_DIGITAL, 408
Access levels, 324
Accessories, 33
Acknowledge fault
    On the BOP20, 347
    Using AOP30, 365
Acknowledging errors, 623
Acknowledging faults, 623
Actual speed value A, 397
Actual speed value B, 397
Adaptation
    Armature current controller, 551
    Field current controller, 551
Address
    Setting the PROFIBUS address, 432
Alarms, 621
    Configuring, 626
Allocation Board, 168
Analog inputs, 140
Analog outputs, 142, 373
AOP30
    Acknowledge fault, 365
    as the time-of-day master, 369
    Battery replacement, 666
    Cable assignment, 167
    Faults and alarms, 367
    Installation dimensions, 63
    LOCAL mode, 362
    Menu structure, 351
    Operation screen, 352
    Overview, 349
Application classes, 381
Automatic restart, 571
Auxiliary circuits, 560

B

BICO technology
    Converter, 338
    Fixed values, 338
    Interconnecting signals, 336
    What is it?, 335
Binector, 335
Block diagram, 87
BOP20, 339
    Commissioning steps, 247
    Control word, drive, 348
    Status display, 717
Brake, 557
Braking distance, 544

C

Cable routing in the device, 82
Cable sets, 35
CBE20, 169, 306
CDS, (See "Data sets")
Certifications, 701
    Korean certification, 701
Changing over the power unit topology, 592
Commissioning
    Drive optimization, 308
    Optimization runs, 252, 258
    Optional additional modules, 297
    STARTER, 259
    With AOP30, 254
Communication
    Communication services, 374
    I&M, 482
    Identification & Maintenance, 482
    Port numbers used, 374
    PROFIBUS, 428
    via Modbus TCP, 517
    via PROFIdrive, 379
Components
    CBE20 Communication Board Ethernet, 170
    Sensor Module Cabinet-Mounted SMC30, 184
    Terminal Module TM15, 200
    Terminal Module TM150, 231
    Terminal Module TM31, 213
Connecting
    Current transformer, 111
    External power unit, 90
    Firing pulse transformers, 118
    Fuse monitoring, 121
    Fuse monitoring distributor, 121
    Pulse encoder, 145
    Voltage measurement equipment, 120
Connecting power units in parallel, 121

Connecting the pulse encoder, 145
Connector, 336
Control word 1, 389
Control word 1 BM, 391
Control word 2, 391
Control word 2 BM, 392
Copy protection
Activating, 648
Copying RAM to ROM, 294
CPU time load, 630
Creep, 545
CU_STW1, 407
CU_ZSW1, 408
CUD
LEDs, 609
Current actual value sensing, 668
Current transformer, 111

D

Data sets
Command data set (CDS), 324
Drive data set (DDS), 325
Encoder data set (EDS), 326
Data transfer
PROFINET, 468
DCC, 635
DCP flashing, 470
DDS, (See "Data sets")
Determining the axis number, 421
Determining the object number, 421
Determinism, 465
Device data, 44
Device identification, 434, 454
Device name, 467
Diagnostics
Diagnostics memory, 605
Trend recorder function, 606
using LEDs for CBE20, 172
using LEDs for the Sensor Module Cabinet SMC30, 193
Diagnostics channel
Forwarding of messages, 455, 479
Diagnostics via LEDs
Sensor Module Cabinet SMC10, 180
Terminal Module TM15, 207
Terminal Module TM150, 239
Terminal Module TM31, 226
Diagnostics via STARTER, 611
Digital inputs, 141
Digital outputs, 141
Dimension drawing, 48
Device, 48
Firing pulse transformer module, 50
Dimension drawings
Sensor Module Cabinet SMC10, 181
Terminal Module TM150, 240
Dimensions, 48
Direct data exchange
Faults, 455
GSD, 453
PROFIBUS, 439
Disconnection, 535
Disposal, 710
Dividing the unit, 55
Division options, 96
Drive Control Chart, 635
Drive object, 328
Drive Object, 328
Drive optimization, 308
Optimization runs, 310
DRIVE-CLiQ, 149

E

E_DIGITAL, 408
EDS, (See "Data sets")
EIP, 496
Electromagnetic compatibility, (See EMC)
Electromagnetic fields, 23
Electronics power supply, 139
Electrostatic-sensitive devices, 27
EMC, 68
Basic information, 68
EMC-compliant installation, 72
IEC 61800-3, 69
Radio interference suppression filter, 75, 78
Enable, 537
Encoder
Pulse encoder evaluation, 142, 144
Encoder evaluation, 546
Encoder interface, 398
Reference mark search, 400
Endless trace, 616
Environmental classes, 43
Environmental compatibility, 710
E-STOP, 538
EtherNet/IP, 496
Connection, 496
Example
PROFIBUS telegram structure, 431

F

Factory setting, 259
Fan
  Operating hours counter, 561
Fault buffer, 624
Fault value, 624
FAULT_CODE, 398
Faults, 621
  Acknowledging, 623
  Configuring, 626
  Fault buffer, 624
Faults and alarms, 367, 621
  BICO interconnections, 629
Field characteristic, 313
Field reversal, 592
Field supply, 123
Firing pulse transformers, 118
Firing pulses
  Amplifying, 119
  Connecting in parallel, 119
Firmware update, 655, 657
Fixed setpoint, 546
Free telegrams, 384
Friction characteristic, 314
Function generator, 612
Function modules
  Technology controller, 554
Functional safety, 168, 719
Fuse monitoring, 120
Fuse monitoring distributor, 121
Fuses, 127

G

G2_STW, 401
G2_XIST1, 405
G2_ZSW, 405
Gn_STW, 399
Gn_ZSW, 402
GSD
  GSD file, 433

H

Hearing protection, 27
Holding brake, 557
Hot restart time, 571

I

I&M, 482
I2t monitoring, 562
Identification & Maintenance, 482
Industrial Security
  IT Security, 373
Inputs, 140
  Analog, 140
  Digital, 141
  Overview, 371
  Temperature sensor, 142
Installation
  Sensor Module Cabinet, 181, 194
  Terminal Module TM150, 240
Intended use, 3
Interconnecting signals using BICO technology, 336
Interconnection using BICO technology, 336
Interface descriptions
  SMC 10 Sensor Module Cabinet, 177
  Terminal Module TM150, 233
Interfaces
  DRIVE-CLiQ, 149
  Peer-to-peer, 141, 597
  USS, 531
IO controller, 465
IO device, 465
IO supervisor, 465
IRT, 473
  Comparison with RT, 474

J

Jogging, 544

K

Know-how protection
  Absolute know-how protection, 648
  Activating, 648
  Changing the password, 650
  Copy protection, 646
  Data security of the memory card, 646
  Deactivating, 649
  Executable functions, 645
  For loading to the file system, 651
  Locked functions, 645
  Overview, 644
  Parameters that can be changed, 645

Password check, 646
Password security, 644
Korean certification, 701

L

Lead/lag element, 549
LEDs
for CBE20, 172
for the Sensor Module Cabinet SMC30, 193
On the CUD, 609
Sensor Module Cabinet SMC10, 180
Terminal Module TM15, 207
Terminal Module TM150, 239
Terminal Module TM31, 226
Load resistors, 111

M

Maintenance, 655
Battery replacement, AOP30, 666
Manual optimization, 315
Manufacturer-specific telegrams, 384
MBAP, 523
Measurement
Armature current, offset correction, 116
Mechanical system capable of oscillation, 314
Media redundancy, 472
MELD_NAMUR, 398
Memory card, 329, 330
Safely removing, 330
Menu, (See AOP30)
Messages, 621
Configuring, 626
External triggering, 627
Modbus Application Header, 523
Modbus TCP, 517
Activate via interface X1400, 519
Communication via data set 47, 526
Function codes used, 523
Mapping tables, 520
Modbus register to the parameters of the Control Unit, 520
Parameterizing communication for X1400, 520
Read and write access, 523
Reading and writing parameters, 525
Motor temperature, 565
MTrace, 621
Multiple trace, 616

N

NACT_A, 397
NACT_B, 397
Nameplate, 31
Network Time Protocol, 376
NTP, 376

O

OFF2, 535
OFF3, 535
Offset correction, 116
Online mode with STARTER, 458
Operating hours counter, 376
Unit fan, 561
Operation enable, 537
Operation screen, (See AOP30)
Operational brake, 557
Operator panel
AOP30, 254, 348
BOP20, 247, 339
Optimization
Armature current closed-loop control, 311, (Inductive load)
EMF closed-loop control, 313
Field current closed-loop control, 311, 318
Friction characteristic, 314
manual, 252
Manual, 315
Mechanical system capable of oscillation, 314
Optimization runs, 252, 258
Speed control, 312
Speed controller, 319
Optimization runs, 310
Options, 33, 64
G63, 133, 150, 604
Outputs, 140
analog, 373
Analog, 142
Digital, 141
Overview, 371
Overload protection, 562

P

Packaging label, 32
Parallel connection, 573
12-pulse, 582
6-pulse, 576

n+m mode, 577
Parameterization, 579
Standard mode, 577
Parallel interface, 150
Parameter
Factory setting, 259
Parameterization
Using BOP20, 339
With AOP30, 353
Parameters
Access levels, 324
Categories, 321
Saving, 368
Types, 321
Password
Changing, 650
Peer-to-peer interface, 141, 597
Ping snap, 376
Power failure
Restart, 571
Power unit topology, 592
Process data, 388
Process data, actual values
G1_XIST1, 403
G1_XIST2, 403
G2_XIST1, 405
G2_XIST2, 405
Process data, control words
A_DIGITAL, 408
CU_STW1, 407
G2_STW, 401
Gn_STW, 399
Process data, setpoints
NSET_A, 392
NSET_B, 393
Process data, status words
CU_ZSW1, 408
E_DIGITAL, 408
G2_ZSW, 405
Gn_ZSW, 402
MELD_NAMUR, 398
PROFIBUS, 428
Bus terminating resistor, 428
Cable, 84
Connection, 427
Connector, 84, 149, 427
Device identification, 434, 454
Direct data exchange, 439
Forwarding of messages via diagnostics channels, 455
Generic station description file, 433, 453
Master class 1 and 2, 429
Setting the address, 432
Terminating resistor, 435
VIK-NAMUR, 434
PROFIBUS telegram structure, 431
PROFIdrive, 379
Controller, Supervisor, Drive Unit, 380
Device classes, 380
Reading parameters, 421
Telegrams, 384
Write parameter, 423
PROFINET
Data transfer, 468
Forwarding of messages via diagnostics channels, 479
Interface, 470
PROFINET cables, 172
PROFINET IO, 464
Addresses, 466
IRT, 473
With IRT, 466
With RT, 466
Protective conductor connection and shield support
Terminal Module TM150, 242
Pulse encoder evaluation, 142, 144, 184, 546

Q

Quick stop, 535

R

Radio interference suppression filter, 78
Ramp-down time, 539
Ramp-function generator, 539
Ramp-function integrator, 542
Ramp-function-generator tracking, 543
Ramp-up time, 539
Real-time communication, 465
Recycling, 710
Reference mark search, 400
Removing modules, 57
Replacement
Operator panel battery, 665
Replacing the Backup Battery of the Cabinet Operator Panel, 665
Replacing the CUD, 663
Restart, 571
Ribbon cables, 162
Ring topology, 472
Scalance, 472

RT
Comparison with IRT, 474
RT class
Setting, 475
RT classes
Send cycles, 476
Update cycles, 476

S

Safety instructions
Electromagnetic fields, 23
Electrostatic-sensitive devices, 27
General safety instructions, 21
Terminal Modules, 201, 214, 232
Safety Integrated
Functional safety, 719
Machinery Directive, 720
Safety shutdown E-STOP, 538
Sensor Module Cabinet-Mounted SMC10, 175
Sequence of objects in the telegram, 430, 468
Series connection
12-pulse, 589, 591
6-pulse, 584, 587
Setpoint channel
Creep, 545
Fixed setpoint, 546
Jogging, 544
Ramp-function generator, 539
Shipbuilding, 667, 701
Shutdown, 533
OFF2 (disconnection), 535
OFF3 (quick stop), 535
Simulation mode, 629
SINAMICS Link
Activation, 491
Bus cycle, 486
Configuration example, 492
Configuring, 488
Requirements, 484
Synchronous cycle, 486
Transmission time, 485
SINAMICS time synchronization
Setting, 378
Single trace, 616
Single-phase line supply, 571
SMC10, 169, 301
SMC30, 169, 301
Speed controller, 548
Adaptation, 548
Droop, 548
Reference model, 549
Start pulse, 548
Speed-dependent current limiting, 567
Standard CUD, 150
Standard telegrams, 384
STARTER, 259
Commissioning, 261
Configuring a drive unit, 269
Creating the project, 261
Installation, 260
Online mode via PROFINET, 458
Project wizard, 263
Starting the drive project, 290
User interface, 260
Startup trace, 619
Status display at the BOP20, 717
Status word 1, 394
Status word 1 BM, 396
Status word 2, 396
Status word 2 BM, 397
STW1, 389
STW1 BM, 391
STW2, 391
STW2 BM, 392
Switch on, 533
Operation enable (enable), 537
Synchronization domain, 475
Synchronization, ping snap, 376

T

Technical data
Communication Board CBE20, 174
Device data, 44
Sensor Module Cabinet SMC10, 182
Sensor Module Cabinet SMC30, 196
Terminal Module TM15, 212
Terminal Module TM150, 242
Terminal Module TM31, 230
Technology controller, 554
Telegrams
Manufacturer-specific, 384
Sequence of objects, 430, 468
Standard, 384
Structure, 388
Temperature sensor, 142
Terminal Module Cabinet, 133, 150, 604
Terminal Module TM15, 200, 298
Terminal Module TM150, 231, 298
Terminal Module TM31, 213, 298
Thermal overload protection, 562
Thyristor diagnostics, 607

Time stamp, 376
Time synchronization, 376
Time-of-day master, 369
Timeout monitoring, 365
TM15, 169, 200
TM150, 169
TMC, 133, 150, 604
Trace function, 614
Trend recorder function, 606

U

Unit fan
    Operating hours counter, 561
Update
    Firmware, 657
Upgrading
    Firmware version, 655
Using the speed controller for other applications, 551
USS interface, 531

W

WARN_CODE, 398
Write protection
    Activating, 642
    Deactivating, 644
    Overview, 642

X

X_I_IST, 146
X100, X101, 149
X11 ... X26, 156
X126, 149, 427
X165, 150
X166, 150
X177, 140, 141, 142
X178, 148
X179, 148
X200, X201, 168
X21A, X21PAR, 162
X22A, X22PAR, 163
X23A, X23B, 164
X45, 166
XB, 146
XF1, 166
XIMP_1 ... XIMP_26, 156
XL1, 146
XL2, 146
XM, 146
XP24V, 139
XR1, 146
XS1, 146
XT1, 146
XT5, XT6, 152

Z

ZSW1, 394
ZSW1 BM, 396
ZSW2, 396
ZSW2 BM, 397

More information

Siemens:
www.siemens.com

Industry Online Support (service and support):
www.siemens.com/online-support

IndustryMall:
www.siemens.com/industrymall

Siemens AG
Digital Industries
Motion Control
Postfach 3180
91050 Erlangen
Germany

Scan the QR-Code for product information