Siemens Industry, Inc.	USER'S MANUAL

UM353R-1
Rev. 2
January 2010

Model 353R, Rack Mount
Process Automation Controller

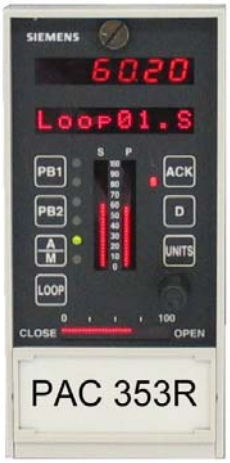



TABLE OF CONTENTS

TITLE **PAGE**

PREFACE XII

1.0 INTRODUCTION 1-1

1.1 HARDWARE 1-1
1.2 FUNCTION BLOCKS 1-5
1.2.1 Loop Function Block Types 1-6
1.3 POWER UP INITIALIZATION 1-7
1.4 CONFIGURATION 1-7
1.5 353R DOCUMENTATION 1-7
1.6 CUSTOMER/PRODUCT SUPPORT 1-9

2.0 GETTING STARTED 2-1

2.1 RECEIVING YOUR ORDER 2-1
2.2 I|WARE PC OPERATOR INTERFACE SOFTWARE 2-2
2.3 I|CONFIG GRAPHICAL CONFIGURATION UTILITY 2-2
2.4 353R CONTROLLER AND I|O HARDWARE 2-3
2.4.1 Determining i|o Module Locations 2-3
2.4.2 Installation Steps 2-4
2.5 UNIVERSAL BUS ADDRESSES 2-6
2.6 I|O MODULE POWER AND KEYING 2-7
2.7 LOCATING A FIELD TERMINATION ASSEMBLY AND AN I|O MODULE 2-8
2.7.1 Relocating Modules 2-10
2.7.2 Module Blanking Kit 2-10

3.0 CONFIGURATION OVERVIEW 3-1

3.1 STATION FUNCTION BLOCKS 3-1
3.2 STATION HARDWARE I/O BLOCKS 3-1
3.3 LOOP FUNCTION BLOCKS 3-1
3.4 ETHERNET DATA I/O FUNCTION BLOCKS 3-3
3.5 LIL GLOBAL DATA I/O FUNCTION BLOCKS 3-3
3.6 UNIVERSAL BUS I|O MODULE FUNCTION BLOCKS 3-3
3.7 CONFIGURATION PROCEDURE 3-3
3.8 OPERATION DURING LOCAL ON-LINE CONFIGURATION 3-7
3.9 REAL TIME CLOCK/CONFIGURATION BACKUP 3-7

4.0 FUNCTION BLOCKS 4-1

4.1 STATION FUNCTION BLOCKS 4-3
4.1.1 FCO LIB - Factory Configuration Library 4-3
4.1.2 SECUR - Security 4-3
4.1.3 STATN - Station Parameters 4-5
4.1.4 CLOCK - Real Time Clock (V2.0/2.2) 4-7
4.1.5 ETHERNET - Ethernet Communication Network (V2.4) 4-7
4.2 I/O AND LOOP FUNCTION BLOCKS 4-8
4.2.1 A/M - A/M Transfer 4-8
4.2.2 ACS - ARCCOSINE 4-10
4.2.3 ADD_ - Addition 4-10
4.2.4 AG3 - AGA 3 Orifice Metering of Natural Gas 4-11
4.2.5 AG7 - AGA 7 Measurement of Gas by Turbine Meters 4-13
4.2.6 AG8 - AGA 8 Compressibility Factors of Natural Gas 4-14
4.2.7 AIE_ - Analog Input - Ethernet (V3.0) 4-15
4.2.8 AIL_ - Analog Input - LIL 4-17

4.2.9 AIN_ - Analog Inputs 4-18
4.2.10 AINU_ - Analog Inputs, Universal 4-19
4.2.11 ALARM - Alarm 4-21
4.2.12 AND_ - AND Logic 4-23
4.2.13 AOE_ - Analog Output- Ethernet (V2.4) 4-24
4.2.14 AOL_ - Analog Output - LIL 4-24
4.2.15 AOUT_ - Analog Outputs 4-25
4.2.16 ASN_ - ARCSINE 4-26
4.2.17 ATD_ - Analog Trend Display 4-26
4.2.18 ATN_ - ARCTANGENT 4-27
4.2.19 AWE_ - Analog Write Ethernet (V3.0) 4-28
4.2.20 BATOT - Batch Totalizer 4-29
4.2.21 BATSW - Batch Switch 4-31
4.2.22 BIAS - Bias 4-32
4.2.23 CIE_- Coil Input - Ethernet (V3.0) 4-33
4.2.24 CHR_ - Characterizer 4-34
4.2.25 CMP_ - Comparator 4-34
4.2.26 COS_ - COSINE 4-35
4.2.27 CWE_ - Coil Write Enable (V3.0) 4-35
4.2.28 DAM_ - Deviation Amplifier 4-36
4.2.29 DIE_ - Digital Input - Ethernet (V3.0) 4-37
4.2.30 DIL_ - Discrete Input _ LIL 4-38
4.2.31 DIN_ - Digital Inputs 4-38
4.2.32 DINU_ - Digital Inputs, Universal 4-39
4.2.33 DIV_ - Division 4-40
4.2.34 DNC_ - Divide by N Counter 4-40
4.2.35 DOE_ - Digital Output - Ethernet (V2.4) 4-41
4.2.36 DOL_ - Discrete Output - LIL 4-41
4.2.37 DOUT_ - Digital Outputs 4-42
4.2.38 DTM_ - Dead Time Table 4-43
4.2.39 DWE_ - Digital Write Enable (V3.0) 4-44
4.2.40 DYT_ - Delay Timer 4-45
4.2.41 E/I - External/Internal Transfer Switch 4-46
4.2.42 ESL - Events Sequence Logger 4-47
4.2.43 EXP_ - NATURAL EXPONENTIATION 4-48
4.2.44 EXT_ - EXPONENTIATION 4-48
4.2.45 FTG_ - Falling Edge Trigger 4-49
4.2.46 GB_ - Gain & Bias 4-49
4.2.47 HLD_ - Hold 4-49
4.2.48 ID - ID Controller 4-50
4.2.49 LL_ - Lead/Lag 4-51
4.2.50 LMT_ - Limit 4-51
4.2.51 LN_ - NATURAL LOGARITHM 4-52
4.2.52 LOG_ - LOGARITHM BASE 10 4-52
4.2.53 MTH_ - Math 4-53
4.2.54 MUL_ - Multiplication 4-54
4.2.55 NND_ - NAND Logic 4-54
4.2.56 NOR_ - NOR Logic 4-55
4.2.57 NOT_ - NOT Logic 4-55
4.2.58 ODA - Operator Display for Analog Indication & Alarming (V2.2) 4-56
4.2.59 ODC - Operator Display for Controllers 4-58
4.2.60 ODD - Operator Display for Discrete Indication & Control (V2.2) 4-60
4.2.61 ODP - Operator Display for Pushbuttons (V2.2) 4-62
4.2.62 ODS - Operator Display for Sequencer 4-64
4.2.63 ON/OFF - On/Off Controller 4-66
4.2.64 OR_ - OR Logic 4-67
4.2.65 ORSL - Override Selector 4-67
4.2.66 OST_ - One Shot Timer 4-68

4.2.67 PB1SW - PB1 Switch 4-69
4.2.68 PB2SW - PB2 Switch 4-70
4.2.69 PB3SW - PB3 Switch 4-71
4.2.70 PCOM - Phase COMmunication 4-72
4.2.71 PD - PD Controller 4-74
4.2.72 PID - PID Controller 4-76
4.2.73 PIDAG - PIDAG Controller 4-78
4.2.74 PRSEQ - Program Sequencer 4-80
4.2.75 QHD_ - Quickset Hold 4-82
4.2.76 RATIO - Ratio 4-83
4.2.77 RCT_ - Repeat Cycle Timer 4-84
4.2.78 RLM_ - Rate Limiter (V3.0) 4-85
4.2.79 ROT_ - Retentive On Timer 4-86
4.2.80 ROUT_ - Relay Outputs 4-86
4.2.81 RSF_ - RS Flip-Flop 4-87
4.2.82 RTG_ - Rising Edge Trigger 4-88
4.2.83 RTT_ - Real Time clock Trip (V2.0) 4-88
4.2.84 SCL_ - Scaler 4-89
4.2.85 SEL_ - Signal Selector 4-89
4.2.86 SETPT - Setpoint 4-90
4.2.87 SIN_ - SINE 4-91
4.2.88 SPLIM - Setpoint Limit 4-92
4.2.89 SRF_ - SR Flip-Flop 4-93
4.2.90 SUB_ - Subtraction 4-94
4.2.91 TAN_ - TANGENT 4-94
4.2.92 TH_ - Track & Hold 4-95
4.2.93 TOT_ - Totalizer (V2.3) 4-95
4.2.94 TSW_ - Transfer Switch 4-96
4.2.95 UAH_ - Universal bus Analog Hybrid (V2.3) 4-97
4.2.96 UAI_ - Universal bus Analog Input (V2.0) 4-99
4.2.97 UAO_ - Universal bus Analog Output (V2.0/2.3) 4-101
4.2.98 UDI_ - Universal bus Digital Input (V2.0) 4-102
4.2.99 UDO_ - Universal bus Digital Output (V2.0) 4-103
4.2.100 UEI_ - Universal bus Extended digital Input (V2.0) 4-104
4.2.101 UER_ - Universal bus Extended RTD Input (V2.3) 4-105
4.2.102 UET_ - Universal bus Extended Thermocouple Input (V2.3) 4-107
4.2.103 URI_ - Universal bus RTD Input (V2.0) 4-109
4.2.104 USD_ - Universal bus Solenoid Driver (V2.3) 4-111
4.2.105 UTI_ - Universal bus Thermocouple Input (V2.0) 4-112
4.2.106 XOR_ - Exclusive OR Logic 4-114

5.0 FACTORY CONFIGURED OPTIONS 5-1

5.1 FCO101 - SINGLE LOOP CONTROLLER W/ TRACKING SETPOINT 5-2
5.2 FCO102 - SINGLE LOOP CONTROLLER W/ FIXED SETPOINT 5-3
5.3 FCO103 - EXTERNAL SET CONTROLLER WITH TRACKING LOCAL SETPOINT (V1.30) 5-4
5.4 FCO104 - EXTERNAL SET CONTROLLER WITH NON-TRACKING LOCAL SETPOINT (V1.30) 5-6
5.5 FCO105 - RATIO SET CONTROL W/ OPERATOR SETPOINT LIMITS 5-8
5.6 FCO106 - SINGLE LOOP CONTROLLER W/ OPERATOR SETPOINT LIMITS 5-10
5.7 FCO107 - DUAL LOOP CONTROLLER (V1.30) 5-11
5.8 FCO121 - CASCADE CONTROL 5-13
5.9 FCO122 - CASCADE CONTROL W/ OPERATOR SETPOINT LIMITS 5-15

6.0 NETWORK COMMUNICATIONS 6-1

6.1 MODBUS DATA MAPPING 6-1
6.2 LIL DATA MAPPING 6-3

6.2.1 Station Data 6-3
6.2.2 Control Loop Data 6-5
6.2.3 Sequence Loop Data 6-6
6.2.4 Analog Indicator Loop Data 6-9
6.2.5 Discrete Indicator Loop Data 6-10
6.2.6 Pushbutton Loop Data 6-11

7.0 DATA MAPPING 7-1

7.1 CONNECTING TO APACS 7-1
7.2 CONNECTING TO MYCROADVANTAGE 7-1
7.3 CONNECTING TO PROCESSSUITE 7-2
7.4 CONNECTING TO I|WARE PC 7-2
7.5 STATION DATA 7-3
7.5.1 Integer Data (16-bit Integer) 7-3
7.5.2 Station String Data (8-bit ASCII Char - 2/Word) 7-5
7.5.3 Station Coil Data (1-bit) 7-5
7.5.4 Station Status Word (SSW) 7-5
7.6 LOOP DATA 7-6
7.6.1 Dynamic Loop Integer Data 7-7
7.6.1.1 Controller [ODC] 7-7
7.6.1.2 Sequencer [ODS] 7-7
7.6.1.3 Analog Indicator [ODA] - (V2.2) 7-7
7.6.1.4 Discrete Indicator [ODD] - (V2.2) 7-7
7.6.1.5 Discrete Indicator [ODP] - (V2.2) 7-7
7.6.2 Variable Loop Integer Data 7-8
7.6.2.1 Controller [ODC] 7-8
7.6.2.2 Sequencer [ODS] - (MASK Configurations) 7-8
7.6.2.3 Analog Indicator [ODA] - (V2.2) 7-9
7.6.2.4 Discrete Indicator [ODD] - (V2.2) 7-9
7.6.2.5 Discrete Indicator [ODP] - (V2.2) 7-9
7.6.3 Static Loop Integer Data 7-10
7.6.3.1 Controller [ODC] 7-10
7.6.3.2 Sequencer [ODS] - (MASK Configurations) 7-10
7.6.3.3 Analog, Discrete, & Pushbutton Indicators [ODA] ODD] [ODP]- (V2.2) 7-11
7.6.4 Dynamic Loop Floating Point Data (32-bit IEEE) 7-11
7.6.4.1 Controller [ODC] 7-11
7.6.4.2 Sequencer [ODS] 7-11
7.6.4.3 Analog Indicator [ODA] - (V2.2) 7-11
7.6.4.4 Discrete Indicator [ODD] & [ODP]- (V2.2) 7-11
7.6.5 Variable Loop Floating Point Data (32-bit IEEE) 7-12
7.6.5.1 Controller [ODC] 7-12
7.6.5.2 Sequencer (Timers - Running Values) [ODS] 7-12
7.6.5.3 Analog Indicator [ODA]- (V2.2) 7-13
7.6.5.4 Discrete Indicator [ODD] - (V2.2) 7-13
7.6.5.5 Pushbutton/Switch Indicator [ODP] - (V2.2) 7-13
7.6.6 Static Loop Floating Point Data (32-bit IEEE) 7-14
7.6.6.1 Controller [ODC] 7-14
7.6.6.2 Sequencer [ODS] 7-14
7.6.6.3 Controller [ODA] - (V2.2) 7-15
7.6.6.4 Discrete Indicator [ODD] - (V2.2) 7-15
7.6.6.5 Pushbutton/Switch Indicator [ODP] - (V2.2) 7-15
7.6.7 String Loop Data (8-bit ASCII Char - 2/Word) 7-16
7.6.7.1 Controller [ODC] 7-16
7.6.7.2 Sequencer [ODS] 7-16
7.6.7.3 Analog Indicator [ODA] - (V2.2) 7-16
7.6.7.4 Discrete Indicator [ODD] - (V2.2) 7-17
7.6.7.5 Discrete Indicator [ODP] - (V2.2) 7-17
7.6.8 Coil Loop Data (1-bit) 7-19

7.6.8.1 Controller [ODC] 7-19
7.6.8.2 Sequencer Loop [ODS] 7-22
7.6.8.3 Analog Indicator [ODA] - (V2.2) 7-24
7.6.8.4 Digital Indicator [ODD] - (V2.2) 7-26
7.6.8.5 Pushbutton/Switch Indicator [ODP] - (V2.2) 7-29
7.6.9 PCOM Block Status 7-31
7.6.9.1 Controller/Sequencer 7-31
7.6.9.2 Sequencer Loop I/O Coil Data (1-bit) 7-33
7.6.10 Universal Bus Discrete I/O Types, States & Forcing (353R) V2.0 7-35
7.6.10.1 Module Type - Ubus Address xx 7-35
7.6.10.2 Discrete I/O States & Forcing - Ubus Address xx 7-35
7.6.10.3 Trend Data (Loop Defined by MLTP) 7-37
7.6.11 Configuration Data Sequencer Loop 7-40
7.6.12 Real TimeTrip Block Configurations 7-40
7.6.13 Sequencer Time & Analog Configurations 7-41
7.6.14 Timer Function Block Configurations 7-41
7.6.15 LIL Alarm Type Word (ATW) 7-42

8.0 CARRIER AND FACEPLATE MOUNTING AND POWER WIRING 8-1

8.1 MODEL 353RCCB_ CONTROL CARRIER INSTALLATION 8-1
8.1.1 Install the Control Carrier 8-2
8.1.2 AC Power Wiring 8-4
8.1.3 Specifications 8-5
8.1.4 Where to Go Next 8-5
8.2 MODEL IO-(4/8)MC MODULE CARRIER INSTALLATION 8-6
8.2.1 Install a Module Carrier 8-6
8.2.2 Specifications 8-8
8.2.3 Bussed Field Power To i|o Modules 8-9
8.2.4 Where to Go Next 8-11
8.3 MODEL IO-(R/L)CE CARRIER EXTENDER INSTALLATION 8-12
8.3.1 Installation 8-13
8.3.2 12 Vdc Ubus Cable 8-14
8.3.3 External 12 Vdc Power Supply 8-15
8.3.4 Where to Go Next 8-15
8.4 MODEL 353RPSCB_ POWER SUPPLY CARRIER INSTALLATION 8-16
8.4.1 Install the Power Supply Carrier 8-16
8.4.2 Specifications 8-17
8.4.3 Power Supply Carrier Wiring 8-19
8.4.3.1 Install the Power Share Cable 8-19
8.4.3.2 Status Monitor Wiring 8-19
8.4.3.3 24 Vdc Bussed Field Power Wiring 8-20
8.4.3.4 120/240 Vac Input Wiring 8-20
8.4.4 Installing Power Supply Modules 8-20
8.4.5 Where to Go Next 8-20
8.5 MODEL 353RFHDB_ LOCAL FACEPLATE INSTALLATION 8-21
8.5.1 Kit Contents 8-21
8.5.2 Installation 8-21
8.6 MODEL 353RFWMB_ LOCAL FACEPLATE INSTALLATION 8-24
8.6.1 Kit Contents 8-24
8.6.2 Installation 8-24

9.0 MODULE FIELD WIRING AND SPECIFICATIONS 9-1

9.1 MODEL 353RCM_ _ _ _B_ CONTROL MODULE 9-1
9.1.1 Mount the Control Module Assembly 9-1
9.1.2 Wiring Terminations and Guidelines 9-4
9.1.3 Controller and Expander I/O 9-7
9.1.3.1 Analog Input, AIN1-4 and AINU1 and 2 9-7

9.1.3.2 Analog Output, AOUT 1-3 9-9
9.1.3.3 Digital Input and Output, DIN1 and 2 and DINU 1 and 2 9-10
9.1.3.4 Thermocouple, AINU 1 and 2 9-11
9.1.3.5 RTD, AINU1 and 2 9-12
9.1.3.6 Ohm and Slidewire, AINU 1 and 2 9-13
9.1.3.7 Relay Output, ROUT 1 and 2 9-13
9.1.3.8 Local Instrument Link 9-14
9.1.3.9 Modbus 9-15
9.1.3.10 Ethernet 9-15
9.1.4 SIREC D Recorder Connections 9-17
9.1.5 Factory Calibration 9-17
9.1.6 Servicing 9-18
9.1.7 Specifications 9-18
9.1.7.1 MPU Controller Board 9-18
9.1.7.2 I/O Expander Board 9-19
9.1.8 Where to Go Next 9-22
9.2 MODEL 353RPSUAD_ POWER SUPPLY MODULE 9-23
9.2.1 Install the Power Supply 9-25
9.2.2 Wiring 9-25
9.2.3 Specifications 9-25
9.2.4 Where to Go Next 9-25
9.3 MODEL IO-4TC MODULE 9-26
9.3.1 i|o Wiring 9-26
9.3.2 Channel “STATUS” LED 9-27
9.3.3 Specifications 9-27
9.3.4 Where to Go Next 9-28
9.4 MODEL IO-4RT MODULE 9-29
9.4.1 i|o Wiring 9-29
9.4.2 Channel “STATUS” LED 9-30
9.4.3 Specifications 9-30
9.4.4 Where to Go Next 9-31
9.5 MODEL IO-8AI-2 MODULE 9-32
9.5.1 i|o Wiring 9-32
9.5.2 Channel “STATUS” LED 9-33
9.5.3 Specifications 9-33
9.5.4 Where to Go Next 9-34
9.6 MODEL IO-8AI-V MODULE 9-35
9.6.1 i|o Wiring 9-35
9.6.2 Channel “STATUS” LED 9-36
9.6.3 Specifications 9-36
9.6.4 Where to Go Next 9-37
9.7 MODEL IO-8AI-2H MODULE 9-38
9.7.1 i|o Wiring 9-38
9.7.2 Channel “STATUS” LED 9-40
9.7.3 Specifications 9-40
9.7.4 Where to Go Next 9-41
9.8 MODEL IO-8AO MODULE 9-42
9.8.1 i|o Wiring 9-42
9.8.2 Channel “STATUS” LED (Yellow) 9-43
9.8.3 Specifications 9-43
9.8.4 Where to Go Next 9-44
9.9 MODEL IO-8AO-H MODULE 9-45
9.9.1 i|o Wiring 9-45
9.9.2 Channel “STATUS” LED (Yellow) 9-46
9.9.3 Specifications 9-46
9.9.4 Where to Go Next 9-47
9.10 MODEL IO-8DI24DMN MODULE 9-48

9.10.1 i|o Wiring 9-48
9.10.2 Channel “STATUS” LED 9-49
9.10.3 Specifications 9-49
9.10.4 Where to Go Next 9-50
9.11 MODEL IO-8DI24DSI MODULE 9-51
9.11.1 i|o Wiring 9-51
9.11.2 Channel “STATUS” LED 9-52
9.11.3 Specifications 9-52
9.11.4 Where to Go Next 9-53
9.12 MODEL IO-8DI115AMN MODULE 9-54
9.12.1 i|o Wiring 9-54
9.12.2 Channel “STATUS” LED 9-55
9.12.3 Specifications 9-55
9.12.4 Where to Go Next 9-56
9.13 MODEL IO-8DI115ASI MODULE 9-57
9.13.1 i|o Wiring 9-57
9.13.2 Channel “STATUS” LED 9-58
9.13.3 Specifications 9-58
9.13.4 Where to Go Next 9-59
9.14 MODEL IO-8DI230AMN MODULE 9-60
9.14.1 i|o Wiring 9-60
9.14.2 Channel “STATUS” LED 9-61
9.14.3 Specifications 9-61
9.14.4 Where to Go Next 9-62
9.15 MODEL IO-8DI230ASI MODULE 9-63
9.15.1 i|o Wiring 9-63
9.15.2 Channel “STATUS” LED 9-64
9.15.3 Specifications 9-64
9.15.4 Where to Go Next 9-65
9.16 MODEL IO-16DI24DMN MODULE 9-66
9.16.1 i|o Wiring 9-66
9.16.2 Channel “STATUS” LED 9-68
9.16.3 Specifications 9-68
9.16.4 Where to Go Next 9-69
9.17 MODEL IO-16DI24DSI MODULE 9-70
9.17.1 i|o Wiring 9-70
9.17.2 Channel “STATUS” LED 9-72
9.17.3 Specifications 9-72
9.17.4 Where to Go Next 9-73
9.18 MODEL IO-8DO60DMN MODULE 9-74
9.18.1 i|o Wiring 9-74
9.18.2 Channel “STATUS” LED 9-75
9.18.3 Specifications 9-75
9.18.4 Where to Go Next 9-76
9.19 MODEL IO-8DO60DEI MODULE 9-77
9.19.1 i|o Wiring 9-77
9.19.2 Channel “STATUS” LED 9-78
9.19.3 Specifications 9-78
9.19.4 Where to Go Next 9-79
9.20 MODEL IO-8DO250AMN MODULE 9-80
9.20.1 i|o Wiring 9-80
9.20.2 Channel “STATUS” LED 9-81
9.20.3 Specifications 9-81
9.20.4 Where to Go Next 9-82
9.21 MODEL IO-8DO250AEI MODULE 9-83
9.21.1 i|o Wiring 9-83
9.21.2 Channel “STATUS” LED 9-84

9.21.3 Specifications....9-84
9.21.4 Where to Go Next....9-85

10.0 I|STATION INSTALLATION....10-1

10.1 SUPPLIED AND ACCESSORY MATERIALS....10-1
10.2 INSTALLER SUPPLIED MATERIALS....10-2
10.3 INSTALLATION CONSIDERATIONS....10-2
10.4 CABLING....10-2
10.5 STARTING I|WARE....10-3
10.6 REPAIR....10-3
10.7 SPECIFICATIONS....10-3
10.8 WHERE TO GO NEXT....10-3

11.0 LOCAL FACEPLATE OPERATION....11-1

11.1 NORMAL OPERATION MODE....11-1
11.2 CONFIGURATION MODE....11-3
11.3 AUTOTUNE PROCEDURE....11-4

12.0 CONTROLLER AND SYSTEM TEST....12-1

12.1 CONTROLLER CONFIGURATION AND TEST....12-1
12.1.1 Connections and Power....12-1
12.1.2 Configuration....12-2
12.1.2.1 Input/Output....12-2
12.1.2.2 Auto/Manual....12-2
12.1.2.3 Modifying an FCO....12-2
12.1.2.4 Alarms....12-4
12.1.2.5 TAG....12-5
12.1.2.6 QUICK....12-5
12.1.2.7 TUNE....12-6
12.1.2.8 View mode....12-7
12.2 SYSTEM CHECKOUT....12-7

13.0 MAINTENANCE....13-1

13.1 UPGRADING A 353R SYSTEM....13-3
13.2 TOOLS, TEST EQUIPMENT, AND DOCUMENTATION....13-3
13.3 PREVENTIVE MAINTENANCE....13-4
13.3.1 Environmental Considerations....13-4
13.3.2 Visual Inspection....13-4
13.3.2.1 Cleaning....13-4
13.3.2.2 Circuit Board Handling....13-5
13.4 TROUBLESHOOTING....13-6
13.4.1 MPU Controller Board Jumpers....13-6
13.4.2 Controller I/O And i|o Modules....13-6
13.4.3 Power Supply Status Monitor....13-6
13.4.3.1 LED Indications....13-7
13.4.4 Error Codes....13-10
13.4.4.1 Off-Line Error Codes....13-10
13.4.4.2 On-Line Error Codes and Status Codes....13-12
13.5 ASSEMBLY REPLACEMENT....13-15
13.5.1 Main Power Fuse....13-15
13.5.2 Field Termination Assembly Fuses....13-15
13.5.3 Local Faceplate....13-15
13.5.4 Control Module Circuit Boards....13-17
13.5.5 i|o Modules and Field Termination Assemblies....13-21

14.0 CALIBRATION....14-1

14.1 ANALOG INPUT (AIN1-4) 14-2
14.2 ANALOG OUTPUT (AOUT1-3) 14-3

15.0 MODEL DESIGNATIONS AND SYSTEM SPECIFICATIONS 15-1

15.1 MODEL DESIGNATION 15-1
15.2 COMMUNICATION ACCESSORIES 15-5
15.3 ASSEMBLY SPECIFICATIONS 15-5
15.4 ENVIRONMENTAL SPECIFICATIONS 15-5
15.5 AGENCY CERTIFICATIONS 15-6
15.5.1 Special Conditions for Safe Use 15-6

16.0 APPENDIX A - DETERMINE I|O MODULE LOCATION 16-1

17.0 APPENDIX B - DETERMINE CURRENT DEMAND 17-1

17.1 CONTROL CARRIER CURRENT CONSUMPTION (CONT., I/O, AND UBUS ADDRESSES 1, 2 & 3) 17-2
17.2 MODULE CARRIER 1 CURRENT CONSUMPTION (UBUS ADDRESSES 4-11) 17-3
17.3 MODULE CARRIER 2 CURRENT CONSUMPTION (UBUS ADDRESSES 12-19) 17-4
17.4 MODULE CARRIER 3 CURRENT CONSUMPTION (UBUS ADDRESSES 20-27) 17-5
17.5 MODULE CARRIER 4 CURRENT CONSUMPTION (UBUS ADDRESSES 28-31) 17-6
17.6 SYSTEM CURRENT CONSUMPTION 17-7

18.0 APPENDIX C - ACCESSORY POWER SUPPLIES 18-1

18.1 POWER SUPPLY, 12 VDC 18-1
18.2 POWER SUPPLY, 24 VDC 18-3

19.0 APPENDIX D - RECORDING I|O MODULE LOCATION AND WIRING 19-1

20.0 WARRANTY 20-1

SOFTWARE RELEASE MEMO

LIST OF FIGURES

NUMBER AND TITLE **PAGE**

1-1 Model 353R, Assembled Control Carrier 1-2
1-2 Model 353R, Assembled Module Carrier 1-3
1-3 Power Supply Carrier with 3 Installed Power Supply Modules 1-4
1-4 Ethernet Architecture Example 1-5
2-1 Carrier Selection and Ubus Address Numbering 2-6
2-2 i|o Module Keying and Installation 2-9
3-1 Configuration Road Map 3-6
8-1 Single and Multiple Row Mounting 8-2
8-2 Control Carrier Dimensions 8-3
8-3 Flat Panel Mounting Dimensions 8-4
8-4 Assembled Control Carrier 8-4
8-5 Single and Multiple Row Mounting 8-7
8-6 Module Carrier Dimensions 8-8
8-7 Carrier Extender Mounting and Cabling 8-12
8-8 Carrier Extender Dimensions 8-13
8-9 Power Supply Carrier and Cabling 8-16
8-10 Installation Dimensions and Connections 8-18
8-11 Local Faceplate Connection to Control Carrier 8-21
8-12 Faceplate Dimensions 8-22

8-13 Faceplate Display Cutout Dimensions....8-23
8-14 Mounting Clip....8-23
8-15 Local Faceplate Connection to Control Carrier....8-24
8-16 Local Faceplate and Wall/DIN-Rail Bracket Dimensions....8-26
9-1 Assembled Control Carrier....9-2
9-2 Controller Module, Circuit Board Locations....9-3
9-3 MPU Controller Board, Setting Installation Jumpers....9-3
9-4 Controller Module, Field Terminal Assignments....9-5
9-5 Analog Input AIN1, 2-Wire Transmitter....9-7
9-6 Analog Inputs AIN1, 2, and 3; 4-Wire Transmitters....9-8
9-7 Universal Analog Input AINU1....9-8
9-8 Analog Output AOUT 1, Current Output....9-9
9-9 Analog Output AOUT1, Voltage Output....9-9
9-10 Digital Inputs DIN and DINU....9-10
9-11 Digital Output DOUT1, Resistive and Inductive Loads....9-11
9-12 Universal Analog Input AINU1, Thermocouple Input....9-12
9-13 TC Reference Junction Locations, AINU1....9-12
9-14 Universal Analog Input AINU1; 2, 3, and 4-Wire RTD Inputs....9-12
9-15 Universal Analog Input AINU1....9-13
9-16 Universal Relay Outputs ROUT1 and 2, Resistive Load....9-13
9-17 LIL Network Wiring....9-14
9-18 Modbus Converter....9-15
9-19 Modbus Communications, 353R to APACS ACM and Personal Computer....9-16
9-20 353R To Siemens SIREC D Recorder Analog Input Wiring....9-17
9-21 Assembled Control Carrier, Top View....9-23
9-22 Power Supply Modules on a Power Supply Carrier, Front View....9-23
9-23 Power Supply Carrier Cabling....9-24
9-24 Connections for 2-Wire and 4-Wire Transmitters....9-39
9-25 Channel Field Termination Assembly....9-67
9-26 Channel Field Termination Assembly....9-71
10-1 Typical i|station Rear Panel....10-2
10-2 Dimensions, i|station, 15" Model....10-4
13-1 Assembled Control Carrier....13-1
13-2 Assembled 8-Module Carrier....13-2
13-3 Local Faceplate....13-16
13-4 Control Module Circuit Boards....13-17
13-5 MPU Controller Board....13-18
13-6 I/O Expander Board....13-20
13-7 LIL Network Board....13-20
13-8 Ethernet Board....13-21
13-9 Real Time Clock/Configuration Backup Board....13-21
15-1 Equipment Label Locations....15-1
16-1 Bussed Field Power to an 8-Module Carrier....16-3
18-1 12 Vdc Accessory Power Supply....18-2
18-2 Wiring, 12 Vdc Accessory Power Supply....18-2
18-3 Accessory 24 Vdc Power Supply....18-3

LIST OF TABLES

NUMBER AND TITLE **PAGE**

1-1 Technical Literature for Model 353R....1-9
2-1 i|o Module Power and Keying....2-7
4-1 Security Level vs. Accessible Operations....4-4
4-2 Modbus Port Baud Rate Parameters....4-6
4-3 Board Description and ID with Example Hardware and Software Revisions....4-6
4-4 Floating Point Number Formats....4-16
4-5 Integer Default Values....4-16

4-6 FB Numbers vs. Modbus Registers 4-16
4-7 Analog Input Types 4-20
4-8 Analog Input Calibration Values 4-20
4-9 Analog Input SEN MIN/MAX & MIN/MAX SCALE Parameters 4-20
4-10 Universal Bus RTD SENsor Type 4-106
4-11 Universal Bus TC SENsor Type 4-108
4-12 Universal Bus RTD SENsor Type 4-110
4-13 Universal Bus TC/MV SENsor Type 4-113
13-1 Off-Line Error Codes 13-10
13-2 RTC/CB and RCB Boards, Off-Line Error Codes 13-11
13-3 On-Line Error and Status Codes 13-12
15-1 Model Designations 15-2

CHANGES FOR REVISION 2, JANUARY 2010

Significant changes for this revision are listed below.

Section	Change
Throughout UM	Siemens Industry, Inc. replaced Siemens Energy & Automation, Inc. Power supply module design level to "D" from "B".
Front matter	Revision number and date updated
1.6	Customer/Product Support updated
2.3	i|config installation procedure updated
3.8	CALIBRATION paragraph updated
4	Edit block diagram drawings in controller function block sections (ID, Lead/Lag, On/Off, PD, PID, and PIDAG)
4.2.7	Description of AIE function block updated; tables in section updated
4.2.10	Calibration values and parameters updated for AINU function block
4.2.22	Correct block diagram inserted for BIAS function block
7.0	Model 353 communication capabilities for Design Levels A and B noted
7.5.1	Description for code L<u>x</u>T corrected
8.4.4	"Important" statement added
9	Figures 9-6, 9-8, 9-9, 9-10, and 9-17 updated; Figure 9-20 new; I/O Expander Board AINU overvoltage table added
9.2	Title and content updated for design level "D" power supply modules
9.8	Configurable Parameters updated for IO8-AO module
13.4.3.1	i|o module LED indictions described
Attachments	SR353R-1r3 and SR353R-2r1 appended

Procidia, i|pac, i|o, i|ware, i|ware-PC, i|config, i|power, i|station, i|solve, APACS, MYCROADVANTAGE, and ProcessSuite are trademarks or registered trademarks of Siemens Industry, Inc. Other trademarks are the property of their respective owners.

Siemens Industry, Inc. assumes no liability for errors or omissions in this document or for the application and use of information included in this document. The information herein is subject to change without notice.

Procedures in this document have been reviewed for compliance with applicable approval agency requirements and are considered sound practice. Neither Siemens Industry, Inc. nor these agencies are responsible for product uses not included in the approval certification(s) or for repairs or modifications made by the user.

PREFACE

Conventions and Symbols

The following symbols may be used in this manual and may appear on the equipment. The reader should be familiar with the symbols and their meanings. Symbols are provided to quickly alert the reader to safety related text.

Symbol	Meaning
	Indicates an immediate hazardous situation which, if not avoided, *will* result in death or serious injury.
	Indicates a potentially hazardous situation which, if not avoided, *could* result in death or serious injury.
	Indicates a potentially hazardous situation which, if not avoided, *may* result in minor or moderate injury.
CAUTION	Indicates a potentially hazardous situation which, if not avoided, may result in property damage.
NOTICE	Indicates a potential situation which, if not avoided, may result in an undesirable result or state.
IMPORTANT	Identifies an action that should be taken to avoid an undesirable result or state.
Note	Identifies supplemental information that should be read before proceeding.
	**Electrical shock hazard –** Either symbol indicates the presence of an electrical shock hazard. The associated text states the nature of the hazard, what can happen as a result of the hazard, and how to avoid the hazard..
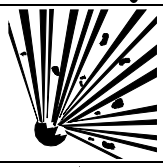	**Explosion hazard –** Symbol indicates that the danger of an explosion hazard exists. The associated text states the nature of the hazard, what can happen as a result of the hazard, and how to avoid the hazard.
	**Electrostatic discharge –** The presence of this symbol indicates that electrostatic discharge can damage the electronic assembly.
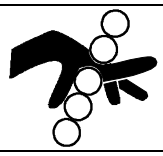	**Pinch hazard –** Symbol indicates that a pinch hazard exists if correct procedures are not followed.

Conventions and Usage Notes

Part numbers are for items ordered from the Process Instrumentation & Analytics Business Unit of Siemens Industry, Inc., except as noted.

Qualified Persons

The described equipment should be installed, configured, operated, and serviced only by qualified persons thoroughly familiar with this manual. A copy of this manual accompanies the equipment. The current version of the manual, in Portable Document Format (PDF), can be downloaded from the Siemens Internet site; see the Customer/Product Support section of this manual for the address.

For the purpose of this manual and product labels, a qualified person is one who is familiar with the installation, assembly, commissioning, and operation of the product, and who has the appropriate qualifications for their activities such as:

- Training, instruction, or authorization to operate and maintain devices/systems according to the safety standards for electrical circuits, high pressures, and corrosive, as well as, critical media.
- For devices with explosion protection: training, instruction or authorization to work on electrical circuits for systems that could cause explosions.
- Training or instruction according to the safety standards in the care and use of suitable safety equipment.

Scope

This manual does not purport to cover all details or variations in equipment or to provide for every possible contingency to be met in connection with installation, operation, or maintenance. Should further information be desired or should particular problems arise which are not covered sufficiently for the purchaser's purposes, the matter should be referred to a support group listed in Section 1.6 Customer/Product Support in this manual or the local Siemens sales office.

The contents of this manual shall not become part of or modify any prior or existing agreement, commitment or relationship. The sales contract contains the entire obligation of Siemens. The warranty contained in the contract between the parties is the sole warranty of Siemens. Any statements continued herein do not create new warranties or modify the existing warranty.

General Warnings and Cautions



An explosion-proof device may be opened only after power is removed from the device.

An intrinsically safe device loses its license as soon as it is operated in a circuit that does not meet the requirements of the examination certificate valid in your country.

The device may be operated with high pressure and corrosive media. Therefore, serious injury and/or considerable material damage cannot be ruled out in the event of handling of the device.

The perfect and safe operation of the equipment is conditional upon proper transport, proper storage, installation and assembly, as well as, on careful operation and commissioning.

The equipment may be used only for the purposes specified in this manual.

CAUTION

Electrostatic discharge can damage or cause the failure of semiconductor devices such as integrated circuits and transistors. The symbol at right appears on a circuit board or other electronic assembly to indicate that special handling precautions are needed.



- A properly grounded conductive wrist or heel strap must be worn whenever an electronics module or circuit board is handled or touched. Static control kits are available from most electrical and electronic supply companies.
- Electronic assemblies must be stored in static protective bags when not installed in equipment.

■

1.0 INTRODUCTION

This User's Manual contains detailed information on configuring, installing and servicing the Model 353R Rack Mount Process Automation Controller. The 353R integrates the unique strengths of a loop controller, a PLC, and a DCS while directly addressing their shortcomings. For example, loop controllers have finite I/O; 353R has expandable, low cost I/O that resides on a Universal Serial Bus. PLCs lack an integrated HMI; the 353R has an auto-configuring HMI with built-in configuration, application development, and monitoring software. DCSs are costly to implement and maintain; a 353R has the advanced control capabilities of a DCS with the ease of installation and configuration of a loop controller.

Visit the Siemens Internet site for more on the Procidia line of control solutions. The address can be found in Section 1.6 Customer/Product Support.

1.1 HARDWARE

This manual discusses the following 353R hardware and software[1]:

- 353R Controller – Collectively refers to the control module, control carrier, power supply, and related assemblies. Figure 1-1 shows the control module mounted on the control carrier. Up to three user-selected i|o modules can be mounted on the control carrier.
- i|o™ – A series of analog and discrete input/output modules that communicate with the control module over a universal serial bus (Ubus). Figure 1-2 shows i|o modules and i|o field termination assemblies mounted on a module carrier. Each i|o module physical location is numbered as shown; however, during configuration an Ubus address number is entered to define each module's location. Addresses are discussed in Section 2 Getting Started.
- i|ware PC™ – Application development software for use on a Windows®-based workstation, i|station™.
- i|config™ – Configuration development software that runs on a Windows-based personal computer.
- i|power™ - Provides expanded power supply capability and redundant power supplies.

The 353R offers the control system designer the ultimate in flexibility and capability for the implementation of continuous and batch solutions.

At the heart of a 353R Controller is a powerful MPU Controller board that uses the latest in microprocessor technology. It includes on-board I/O and reusable function blocks, and it is capable of solving a vast array of control implementations including single loop, cascade, dual loop, and unit control applications. Controller field terminals for I/O wiring are located on the control carrier.

Modbus communications is standard. An RS485-half duplex port at the controller field terminals provides a network connection of up to 32 controllers (e.g. Models 353R, i|pac, 352P, 353, and 354N) to an operator workstation, such as i|station (with i|ware-PC software) or a DCS, enabling integration of controllers into a plant-wide system. An MMJ11 connector on the control carrier is an RS232 Modbus communication port available for configuration and/or debugging when using the optional i|config PC-based Graphical Configuration Utility or as a connection to a local PC-based operator station, such as i|station.

The 353R can be furnished with Ethernet communications. This enables integration with other 353 controllers on a plant-wide Ethernet network.

An optional I/O Expander board can be added to the base Controller. It includes direct thermocouple, RTD, and frequency inputs and additional I/O for direct process measurement of temperature and frequency variables, improving accuracy and control. Controller field terminals are included on the control carrier for the I/O Expander board.

[1] *The 353 family includes the Model 353R, Procidia i|pac Internet Control System*, Model 353 Process Automation Controller, Model 352P Single-Loop Digital Controller, Model 354N Universal Control Station*, and Model 354N Universal Loop Controller*. See User's Manual UM353R-1, UMiPAC-1, UM353-1, UM353-1B, UM352P-1, UM354-1, or UM354N-1 as appropriate. * Discontinued controller,superseded by later model.*

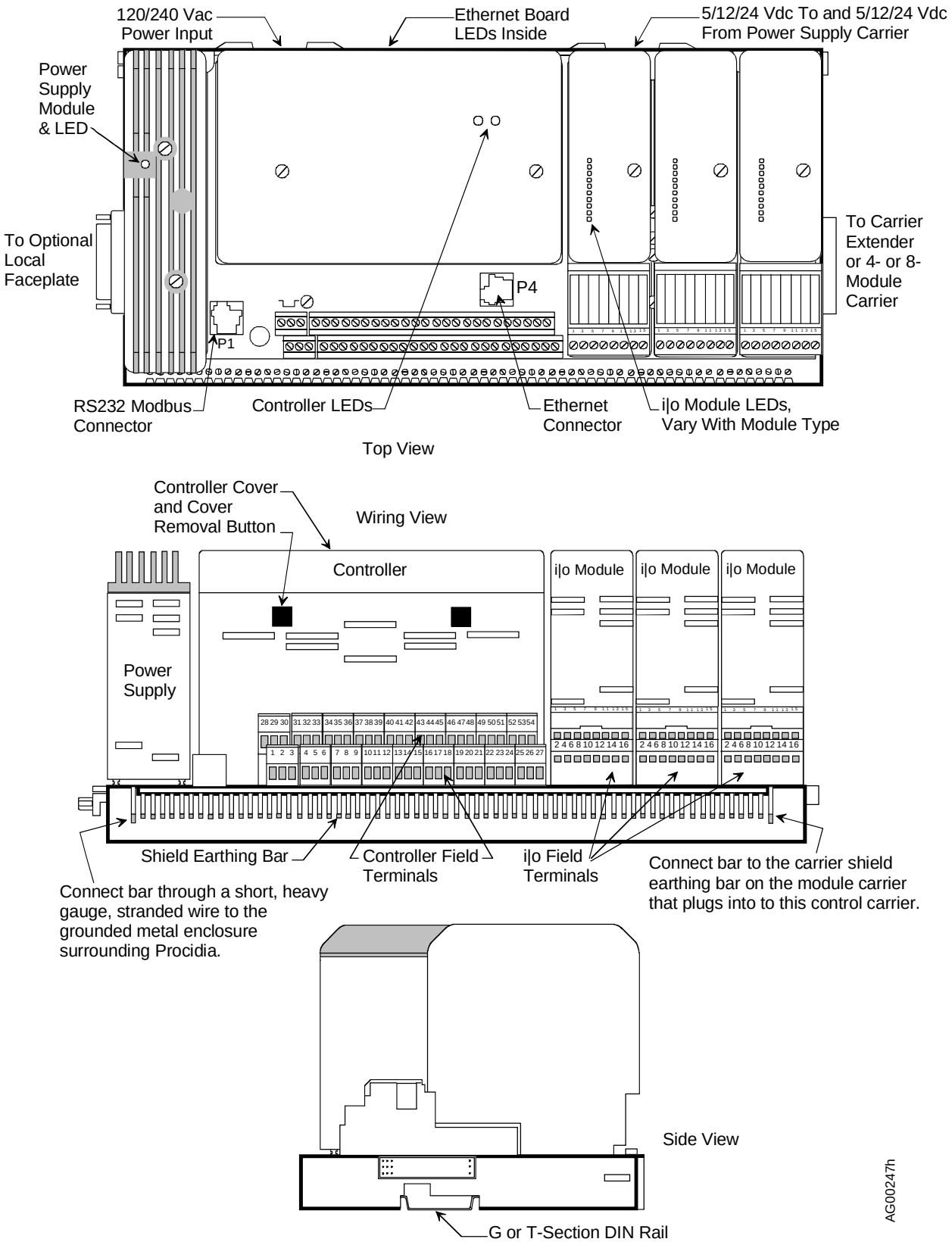

FIGURE 1-1 Model 353R, Assembled Control Carrier

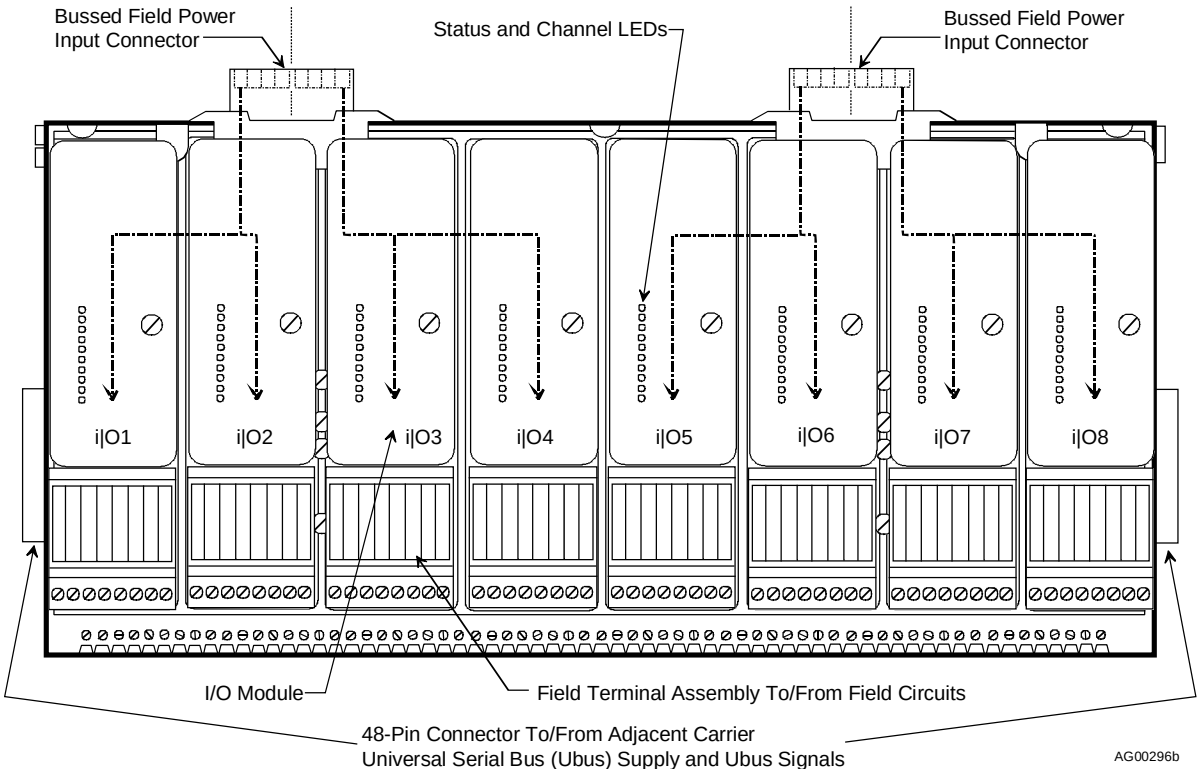

FIGURE 1-2 Model 353R, Assembled Module Carrier

When additional I/O is needed for multiple-loop applications, advanced control, or batch sequencing, up to 31 i|o modules can be installed. The control carrier can accept up to three (3) i|o modules. I|o modules that reside on the control carrier can include any of the modules that use external power (sinking) for the i|o or any of the 24 Vdc module powered i|o. Additional module carriers can be used to add up to 28 i|o modules.

Up to four power supply modules can be included in each 353R system: one on the control carrier and up to 3 on the Power Supply Carrier shown in Figure 1-3. The power supplies employ unique power sharing circuitry that allows the current drawn by the controller, controller I/O, i|o modules and field devices to be evenly distributed among the installed power supply modules. When sufficient power supply modules are installed to supply the needed operating current and then an additional power supply module is installed, power supply redundancy is provided. In the event of a power supply module failure, the remaining supplies will share the load and furnish the needed power.

Although the 353R Controller is connected to and operated entirely from an operator workstation, such as i|station, a local controller faceplate can be included. This local interface is for applications where loops may need individual attention during startup, troubleshooting, maintenance, or emergency conditions. The convenient faceplate layout and sophisticated software allow process and configuration changes to be made quickly and easily from the faceplate. This faceplate can be mounted next to the control carrier, hand held for temporary use, or panel mounted using the furnished 6-ft display cable.

The controller can be completely configured from the local faceplate or, as mentioned above, configured remotely using i|config, the optional PC-based Graphical Configuration Utility. An optional Real Time Clock/Configuration Backup board (RTC/CB) is available to quickly transfer a configuration from one controller to another when downloading a configuration over a network is not available. This board also provides a real time clock function.

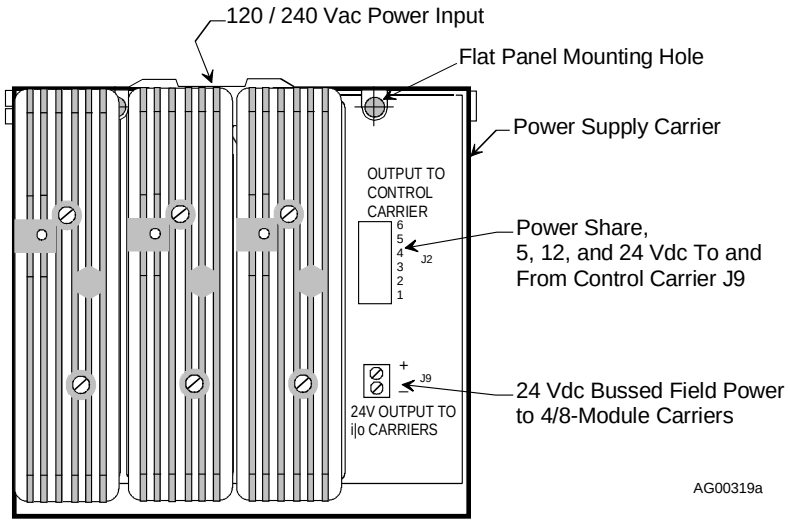

FIGURE 1-3 Power Supply Carrier with 3 Installed Power Supply Modules

Network communication options are listed in the following table.

Protocol (Select One)	Available	Connection	Option Board Needed
Modbus	Standard	Cont. Field Terminals, NCA and NCB	None
Local Instrument Link	Optional	Cont. Field Terminals, NCA and NCB	LIL Communication
Ethernet	Optional	RJ-45 on Control Carrier	Ethernet Communications

Modbus communication is standard. An optional Local Instrument Link (LIL) network board is available in place of the Modbus communication to provide higher speed networking and peer-to-peer communication between controllers. This provides connectivity with an array of network-enabled products, including those listed below.

Current Controller Models	Previous Controller Models
Model 353R Process Automation Controller Model 353 Process Automation Controller Model 352P Single-Loop Digital Controller	Procidia i|pac Internet Control System Model 352 Single-Loop Digital Controller Model 351 Triple-Loop Digital Controller Model 354/354N Universal Controllers Model 382 Logic and Sequence Controller

An optional Ethernet board is available in place of Modbus and LIL communications. This option enables peer-to-peer communication between current 353R controllers and many other devices using Ethernet (embedded Modbus RTU protocol) technology, commonly known as Modbus TCP/IP. Ethernet communications requires an Ethernet board and controller firmware V2.4 or higher.

The Ethernet board supports uploading and downloading of controller configurations over the Ethernet LAN. For example, if i|config Graphical Configuration Utility software is loaded on the local client shown in Figure 1-4, controller configurations can be developed on the client, or uploaded from the controller for editing, and then downloaded to the controller. The Ethernet-Modbus Bridge in Figure 1-4 accepts an Ethernet data command from the controller and outputs an equivalent Modbus command to a Modbus device. The returning Modbus data is embedded by the bridge in an Ethernet packet to be sent to the requesting controller.

When controllers are located on a local Ethernet network, they can also be accessed from a remote location using Windows RAS (Remote Access Services) and a dial-up modem/router. Controller applications such as i|config or i|ware can then be run from a remote site.

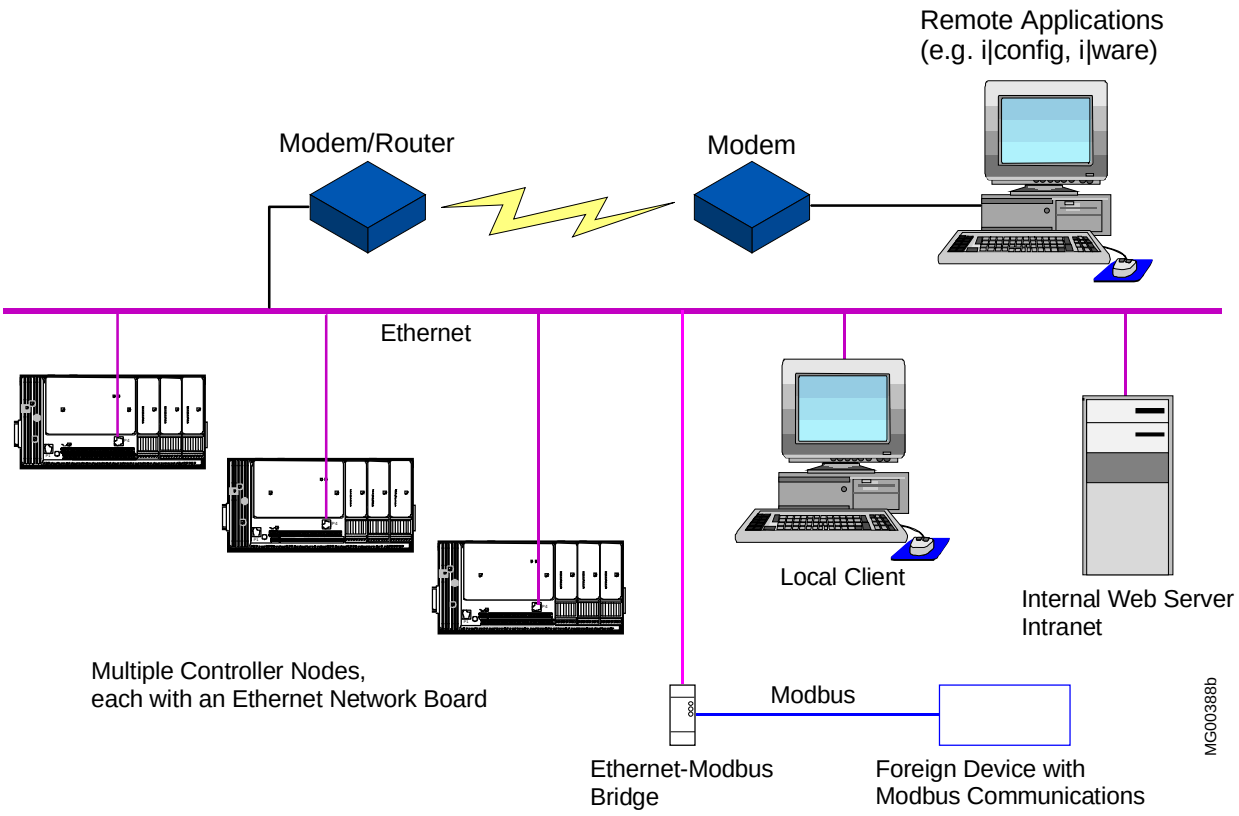

FIGURE 1-4 Ethernet Architecture Example

1.2 FUNCTION BLOCKS

The 353R Controller software is built on proven function block designs from previous LIL products and from APACS (Advanced Process Automation and Control System) products which support the IEC1131 standard. In many cases, the 353R has been enhanced with features only now possible with state of the art technology.

Function blocks are selected for use within a LOOP. Multiple loops can be configured, and each loop can be associated with an operator faceplate. Certain blocks are used once within each loop (e.g. controller, setpoint, auto/manual) while others can be used as many times as needed. Some notable features include Auto Tuning within the PID function blocks, an expandable Sequencer that allows configuration of up to 250 steps, and up to 256 discrete inputs and outputs. In addition, the Graphical Configuration Utility i|config can be used to design the logic in a ladder diagram. Combining these features with continuous control loops within the same controller offers a well integrated solution for small batch operations.

Several function blocks are available at the station level for configuration of STATION level parameters. These parameters include the network address, station tag name, the CLOCK function when the RTC/CB option board has been included, and the ETHERNET block (when the Ethernet board has been installed and the controller contains firmware V2.4 or higher) to configure parameters such as the IP address. All other function blocks are used for configuration within an individual LOOP. Control implementations are configured in the 353R Controller by first creating a loop, then entering a unique loop tag name and selecting function blocks for use within that loop. A number of loops can be configured in the 353R Controller and a number of function block types are available as described in the sections that follow.

1.2.1 Loop Function Block Types

Local I/O Function Blocks are provided on both the MPU Controller Board and the I/O Expander Board. These blocks can be used in any LOOP, but as fixed resources are expendable. When used within a loop, the unique block name becomes <loop>.<block> (e.g. TC2053.AIN1 for Analog Input 1 used in loop TC2053).



Fixed Loop Function Blocks can be selected for use within each configured LOOP and include those blocks which define the major functions of a loop. The operator display function block (e.g. ODC Operator Display for Controllers) defines the loop type, the function of the local faceplate as well as the processing of commands coming from a remote workstation. A single controller function block can be selected from one of five available choices (ID, ON_OFF, PD, PIDAG, & PID) within each loop. When used within a loop the unique block name becomes <loop>.<block> (e.g. TC2053.PID for the PID controller used in loop TC2053).

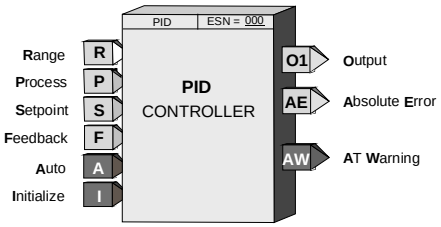

Arithmetic Function Blocks are also designated as LOOP function blocks and can be used as many times as needed in each loop. Each use of a block is automatically assigned a unique name (i.e. MATH01, MATH02) within each loop so that the unique block name becomes <loop>.<block> (e.g. TC2053.MATH01).

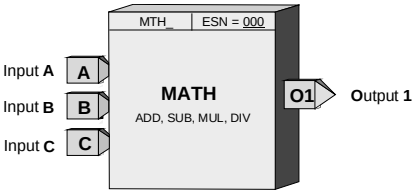

Logic Function Blocks are also designated as LOOP function blocks and can be used as many times as needed in each loop. Each use of a block is automatically assigned a unique name (i.e. AND01, AND02) within each loop so that the unique block name becomes <loop>.<block> (e.g. TC2053.AND01).

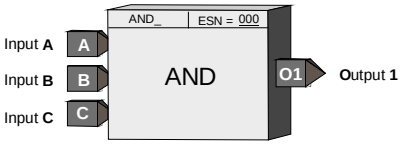

General Purpose Function Blocks are also designated as LOOP function blocks and include blocks that do not fall into the arithmetic or logic categories. These can be used as many times as needed and each use will automatically be assigned a unique name (e.g. HLD01, HLD02) within each loop so that the unique block name becomes <loop>.<block> (e.g. TC2053.HLD01).

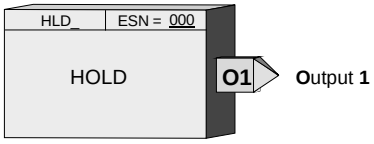

Universal Bus i|o blocks can be used as needed in each LOOP to provide a method for sending and receiving both analog and discrete data to and from i|o modules on the Universal bus. Each use will automatically be assigned a unique name (e.g. UAI01, UAO01) within the station so that the unique block name becomes <loop>.<block> (e.g. TC2053.UAI01 for Analog Input-lev_Percent used in loop TC2053). The second UAI block used within the station will be assigned UAI02 even if in a different loop so that the remote I/O blocks have unique names within the station. This will enable unique names for station variables on the Universal Bus.

LIL Global Function Blocks are used as needed within a LOOP when the LIL option board is installed to enable global data communication over the LIL. They will automatically be assigned a unique name (e.g. AIL01, DIL01) within each loop when it is configured so that the unique block name becomes <loop>.<block> (e.g. TC2053.AIL01). Input and output data blocks are available as needed and will be assigned unique names as used (e.g. AIL01, AIL02 for Analog Input-LIL blocks).

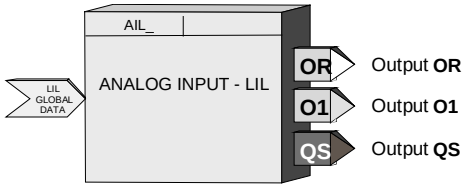

Ethernet Function Blocks (V2.4) are used as needed within a LOOP when the Ethernet option board is installed They will automatically be assigned a unique name (e.g. AIE01, DIE01) within each loop when it is configured so that the unique block name becomes <loop>.<block> (e.g. TC2053.AIE01).

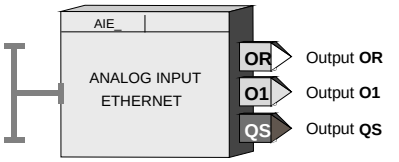

1.3 POWER UP INITIALIZATION

The 353R controller will retain, in the station NVRAM, calculated block values (e.g. outputs, elapsed time, last input/output logic states) and the time since power was lost. Three 353R power up modes (hot, warm, and cold) affect the initialization of function blocks. These three modes are configured by two power up timers (warm and cold), included in STATION parameters. The station will initialize a hot start when power up occurs prior to the expiration of the warm timer. A cold start will occur when power up occurs after the expiration of the cold timer and a warm start will take place when the station powers up after the expiration of the warm timer but prior to the expiration of the cold timer.

Hot Start[⊕] - All function block execution continues from the last state prior to power fail.

Warm Start[⊕] - Function blocks that have a power up in a last state feature, either by design or by configuration selection, will power up as defined in the individual block descriptions. All other function blocks will initialize at cold start conditions.

Cold Start[⊕] - All function block outputs will initialize at 0 unless otherwise stated in individual block descriptions.

1.4 CONFIGURATION

A 353R can be configured using either the i|config graphical configuration software or the optional local faceplate. The local faceplate includes pushbuttons located behind a flip-down door for complete configuration including the addition/deletion of loops and function blocks and the editing of function block parameters. Configuration Overview includes a road map for stepping through configuration using the local faceplate. Certain block parameters (e.g. gains, constants) can be edited while on-line but design changes (e.g. block interconnections, block additions) will put the station in "configuration hold" which will hold outputs at the current value until the Exit button is pressed. This will enable bumpless changes to be made while on-line.

A configuration can be downloaded to the 353R either via the port on the control carrier or over a network (either Modbus, LIL, or Ethernet). During a download, all outputs will be held and the 353R will retain all the intermediate calculations of all the blocks it had been running prior to the download. After the download, all function block parameters with the same tag name as those held will be used to initialize the downloaded function block parameters, thus providing a bumpless download under these conditions. If a loop tag name is changed, the tag names of all function blocks within that loop will change and will, therefore, require re-initialization of all of these blocks. However, the loop tag can be changed from the local faceplate without causing re-initialization, providing a bumpless tag change.

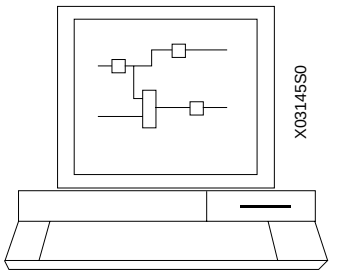

Optional PC-Based
Graphical Configuration Software

1.5 353R DOCUMENTATION

UM353R-1 is the User's Manual for the Model 353R. It is a complete system user's manual as it contains information about all involved assemblies, and system configuration, operation, and maintenance. The Literature CD supplied with each system order contains UM353R-1 and other 353R technical documentation in portable document format (PDF). See Table 1-1 later in this section for a description of available technical literature.

IMPORTANT

Save the manuals supplied with your order and make them available for installation, configuration, operation, and servicing of the 353R.

In the following paragraphs, the contents of UM353R-1 will be briefly described to help the reader quickly locate needed information. The current revision of UM353R-1 can be found at the Siemens web site. See Section 1.6 Customer/Products Support for the URL.

[⊕] Set the Hot/Warm Jumper (W8) on the MPU Controller board. Refer to Section 9.1 353R-CM or Section 13 Maintenance for details.

Getting Started

Section 2 Getting Started contains installation information for 353R software: i|ware, and i|config. References are provided to detailed information in manuals provided with the software. A step-by-step hardware installation overview is provided with references to assembly sections where needed. Much of the hardware installation is described in this section, however, be sure to read all of the provided material.

Sections 17 through 20 (Appendices A through D) provide procedures for locating and relocating modules on the carriers, determining current and voltage requirements, and recording the final module layout.

Configuration, Communications, and Data Mapping

Sections 3, 4, 5, 6, and 7 contain a comprehensive discussion of configuring the 353R. The local faceplate is the primary interface tool. The Configuration Guide for the i|config Graphical Configuration Utility describes configuration in a graphical PC environment.

Mounting, Wiring, and Specifications

Sections 8, 9, and 10 provide the mounting procedures and wiring diagrams for the 353R control module, i|o modules, and related assemblies. Included in a typical section are detailed mounting procedures, connections for power and field devices, and specifications applicable to that assembly.

Local Faceplate Operation

Section 11 describes operating 353R from a local faceplate. When operating from i|station (or a PC running i|ware), refer to the i|ware documentation for system operation.

Controller and System Checkout

Section 12 describes a method of testing controller and I/O functionality using FCO101 and a local faceplate. The method can be expanded to test other configurations and i|o.

Maintenance and Calibration

Sections 14 and 15 describe maintenance and calibration of the 353R.

Model Designations and System Specifications

Section 15 identifies and describes each 353R assembly. It also contains system level environmental specifications and approval agency certification details. Refer to this material before beginning an installation.

353R Technical Literature List

TABLE 1-1 Technical Literature for Model 353R

IDENTIFIER (PN)	DESCRIPTION
UM353R-1	**Model 353R User's Manual** – Contains installation and maintenance instructions for the controller, controller I/O, Ubus i|o, and related carriers and assemblies. A Getting Started section addresses installing of configuration and application software. The manual is on the 353R Literature CD in PDF format and is available in printed form. Also, the PDF can be found at the Siemens Internet site; see Section 1.6 below.
SG15939-64	**I|config Graphical Configuration, Software Guide** – Provides detailed procedures for loading the software and creating a configuration in a graphical environment. The manual is on the i|config software CD in PDF format.
15032-P100	**Hazardous Area Installation, Supplement to UM353R-1** – The manuals listed above contain the information needed for installation, configuration, and operation in most instances. The Supplement has additional information, such as materials of construction, which may be needed for some installations. The Supplement is available upon request.

1.6 CUSTOMER/PRODUCT SUPPORT

Support is available through an online Support Request service; a link is provided in the table at the end of this section.

When contacting Siemens for support:

- Please provide complete product information:
    - For hardware, this information is provided on the product nameplate (part number or model number, serial number, and/or version).
    - For most software, this information is given in the Help > About screen.
- If there is a problem with product operation:
    - Is the problem intermittent or repeatable? What symptoms have been observed?
    - What steps, configuration changes, loop modifications, etc. were performed before the problem occurred?
    - What status messages, error messages, or LED indications are displayed?
    - What troubleshooting steps have been performed?
    - Is the installation environment (e.g. temperature, humidity) within the product's specified operating parameters? For software, does the PC meet or exceed the minimum requirements (e.g. processor, memory, operating system)?
- A copy of the product Service Instruction, User's Manual, or other technical publication should be at hand. The Siemens public Internet site (see the table) has current revisions of technical literature, in Portable Document Format, for downloading.
- To send an instrument to Siemens for warranty or non-warranty service, call Repair Service and request a Return Material Authorization (RMA).

IMPORTANT

An instrument must be thoroughly cleaned (decontaminated) to remove any process materials, hazardous materials, or blood-borne pathogens prior to return for repair. Read and complete the Siemens RMA form(s).

For support and the location of your local Siemens representative, refer to the table below for the URL of the Process Instrumentation (PI) portion of the Siemens public Internet site. Once at the site, click **Support** in the right column and then **Product Support**. Next select the type of support desired: sales, technical (see the table below), documentation, or software.

Online Support Request	http://www.siemens.com/automation/support-request
Technical Support	1-800-333-7421; 8 a.m. to 4:45 p.m. eastern time, Monday through Friday (except holidays)
Customer Service & Returns	1-800-365-8766 (warranty and non-warranty)
Public Internet Site	http://www.usa.siemens.com/pi
Technical Publications in PDF	Click the above link to go to the PI home page. Click **Support** and then **Manuals** and then, under "Additional Manuals," select the product line (e.g. Control Solutions)

2.0 GETTING STARTED

Getting started is quick and easy.

1. Open the cartons and check the contents to be sure they match your order. **Locate and save the supplied User's Manual, literature and software CDs, and any other supplied literature.**
2. Select mounting locations for the control carrier, module carrier(s), and power supply carrier and install the ordered assemblies and modules in a user-supplied panel, enclosure, or cabinet. Refer to Section 15 Model Designations and System Specifications for environmental requirements. Refer to the Agency Certifications portion of that section for hazardous location certifications and to the Special Conditions for Safe Use subsection for specific certification requirements.
3. Install i|station on a desk or in a panel cutout. i|ware and i|config software will typically have been pre-installed. It may be desirable to install i|station before the above hardware items so that configuration development can proceed while the hardware is installed.
4. Refer to Section 12 Controller and System Test and thoroughly test the system.

Each of these steps is described in the following sections with references to related sections in this manual for additional information.

2.1 RECEIVING YOUR ORDER

Before proceeding with the installation, check the contents of your order as described below.

Equipment Delivery, Unpacking and Handling

Prior to shipment, each 353R assembly is fully tested and inspected. It is then packaged for shipment. Assemblies such as the controller, control carrier, power supply, and i|o modules are placed in individual cartons. These relatively small cartons are typically packed in one or more larger cartons. The number and size of cartons employed will depend upon the number of controllers ordered and the physical configuration of each controller. A printed UM353R-1 User's Manual and a Process Instrumentation User Manual CD are included. i|station and its dedicated literature are shipped in a separate carton.

Receipt of Shipment

Inspect each carton at the time of delivery for possible external damage. Any visible damage should be immediately recorded on the carrier's copy of the delivery slip.

Carefully unpack each carton and check the contents against the enclosed packing list. Inspect each item for any hidden damage that may or may not have been accompanied by exterior carton damage.

If ordered items are damaged or missing, refer to the Section 1.6 Customer/Product Support and notify Siemens immediately; provide full details. Also notify the carrier with a request for their on-site inspection of a damaged item and its shipping carton.

Storage

If a controller is to be stored prior to installation, review the environmental specifications in Section 15 Model Designations and System Specifications.

For shipping and storage, the MPU Controller board Hot/Warm Jumper (W8) should be set to the N/C position to maximize battery life. If the jumper has been set to enable Hot/Warm Start, or to simply confirm that the jumper is properly set, refer to Section 9.1 Model 353RCM_ _ _ _B_ Control Module (Figures 9-2 and 9-3) for jumper settings.

2.2 I|WARE PC OPERATOR INTERFACE SOFTWARE

i|ware is pre-installed on an i|station. Supplied on CD-ROM, i|ware can be installed on a user-supplied personal computer running Windows NT w/Service Pack 6a, Windows 2000 or Windows XP Professional. The installation and use of i|ware is described in the Getting Started manual and other manuals located on the i|ware application CD.

PC hardware recommendations are:

- Pentium 2 GHz or higher processor
- 512 MB of RAM (minimum)
- 6 GB of available hard disk space (minimum)
- 3.5-inch (1.44 MB) disk drive
- CD-ROM Drive
- SVGA 1024 x 768 monitor (256 colors) or better
- A mouse or other compatible pointing device

Open the Getting Started manual on the i|ware CD and follow the provided procedures.

2.3 I|CONFIG GRAPHICAL CONFIGURATION UTILITY

i|config is supplied on CD-ROM, however, when ordered as part of a 353R system it is typically pre-installed on an i|station. Alternatively, i|config can be installed on a personal computer running Windows NT, 2000 or XP.

PC hardware recommendations are:

- 2 GHz or faster microprocessor (recommended)
- 6 GB of available hard disk space
- 512 MB of RAM (minimum)
- CD-ROM drive
- Mouse or other compatible pointing device
- SVGA color monitor
- Printer (optional)

To install i|config software:

Refer to i|Config Software Guide SG15939-64 to install the utility. Alternatively, perform the following procedure. If you are upgrading an installed earlier version of the program, perform steps 1 through 7. If this is a new i|config installation, perform steps 3 through 7.

1. Uninstall the earlier version of the program. Note the two bulleted statements below and then click **Start** and select **Control Panel** > **Add/Remove Programs** > **iConfig** and follow the prompts. For earlier versions, click **Start** and select **Programs > Siemens** or **Moore Products** (depending upon version), **uninstallShield**.
   - Answer No to any question concerning removal of .dll files
   - Answer Yes to any question concerning removal of .ocx files
2. After running the uninstall program, verify that the OCX folder with its contents has been deleted. **Do not** delete the Configs folder because it contains your controller configurations.

3. Install i|config by inserting the i|config CD-ROM in the PC's CD drive.
4. In the Start menu, click the Run button and browse to the CD-ROM drive. (There is no autoload program on the CD.)
5. Double click on the Setup.bat icon.
6. Follow the instructions displayed on the screen to complete the installation.
7. Complete the Software Registration Form and return it to Siemens to register your software.

To configure the 353R Controller:

- The i|config CD contains the i|config software, the on-line software guide (SG15939-64), and the Adobe Acrobat Reader (needed to access manuals in PDF format).
- In UM353R-1, read Section 3 Configuration Overview and Section 4 Function Blocks for information about function block types. Section 3 features a Configuration Road Map, Figure 3-1, for a graphical view of configuration. Section 4 contains a detailed description of each function block.
- Refer to Section 2.5 Universal Bus Addresses for i|o module Ubus addresses that are needed during configuration.

2.4 353R CONTROLLER AND I|O HARDWARE

This section provides installation guidelines with references to subsequent sections that provide more detailed information. Below is a suggested installation sequence. Depending upon the items in your order, some steps may not apply to the installation of your system. The supplied multi-color installation sheet provides a view of the major assemblies and how they fit together.

IMPORTANT

The installation must conform to the National Electrical Code and all other applicable construction and electrical codes.



WARNING



Electrical shock hazard
Explosion hazard

Can cause death or injury

- Remove power from all wires and terminals before working on equipment.
- In potentially hazardous atmosphere, remove power from equipment before connecting or disconnecting power, signal, or other circuit.
- Observe pertinent regulations regarding installation in hazardous area.



2.4.1 Determining i|o Module Locations

Begin by going to UM353R-1 Appendix A - Determining i|o Module Location. The Appendix contains guidelines to help with carrier and slot selection and steps to identify system power supply requirements. Next, go to Appendix B - Determining Current Demand to learn how much current the devices connected to each carrier will consume and to learn the total system current demand. Since hardware selection can be affected, the steps in Appendix A should be completed before the control and module carriers are installed.

When an order is for only modules to update or expand an installed system, go to Appendix A - Determining i|o Module Location and to Appendix B - Determining Current Demand for the information mentioned in the preceding paragraph.

Accessory power supplies are available to either replace or supplement those on the power supply carrier. Mounting information is supplied with the accessory power supplies and typical wiring is shown in Appendix C.

Field device connections for each i|o module can be recorded in a series of tables in Appendix D. Space is provided for recording: module type, module model, Ubus address, carrier model, carrier number and module slot, and field device connections to the termination assembly.

2.4.2 Installation Steps

1. Be sure that all ordered items have been received.
2. Be sure that the supplied 353R User's Manual or the Literature or Getting Started CD and a personal computer with the Adobe Reader is available for reference.
3. Review the Determining i|o Module Locations section above to be sure that all i|o module locations have been determined and all AC and DC power requirements have been satisfied.
4. Select the 353R installation location. Refer to Section 15 Model Designations and System Specifications for environmental considerations. Also refer to the following sections for mounting methods and dimensions:
   - Section 8.1 Model 353RCCB_ Control Carrier
   - Section 8.2 Model iO-(4/8)MC Module Carrier
   - Section 8.3 Model iO-(R/L)CE Carrier Extender
   - Section 8.4 Model 353RPSCB_ Power Supply Carrier
5. Select a user-supplied cabinet or enclosure to protect the system from environmental contaminants and for security.
6. Determine the AC power source and select a protective fuse, circuit breaker and/or switch. Installation of power wiring in conduit is recommended. Design and implement an earth ground and a signal ground bus.
7. Determine the routing of wiring between the control and module carriers and all field devices. Use shielded wires and keep wires carrying low level signals separated from those carrying high level or switching signals. Avoid running wires through areas with high EMI and RFI fields. Always use good grounding practices.
8. Mount the control carrier on a DIN rail or flat panel and wire 120/240 Vac power to the carrier. See Section 8.1 Model 353RCCB_. Connect the controller I/O to field and control panel devices. See Section 9.1 Model 353RCM_ _ _ _B_ for I/O wiring connections.
9. Mount the module carrier(s) on a DIN rail or flat panel. See Section 8.2 Model iO-(4/8)MC. Bussed field power will typically need to be wired.
10. If multiple row mounting is used, install right-hand and left-hand carrier extenders, carrier extension cable and 12 Vdc Ubus cable. See Section 8.3 Model iO-(R/L)CE.
11. Mount the power supply carrier to a flat panel. See Section 8.4 Model 353RPSCB_. Then mount the power supplies on the carrier. See Section 9.2 Model 353RPSUAD_ for power supply module details. Install the power share cable and needed 24 Vdc cabling.
12. Mount the local faceplate. Use the display cable to connect the faceplate to the control carrier. See either Section 8.5 Model 353RFHDB_ or Section 8.5 Model 353RFWMB_.
13. Mount the control module on the control carrier and seat the circuit boards. Refer to Section 9.1 Model 353RCM_ _ _ _B_ for control module I/O wiring details.

    Real Time Clock Jumper W8 - As shipped, this MPU Controller board jumper is set to maximize battery life. If the jumper is to be set to enable Hot/Warm Start, or to simply confirm that the jumper is properly set, refer to Figures 9-2 and 9-3 in the Section 9.1 Model 353RCM_ _ _ _B_.

    LIL/Modbus Jumper W2 - As shipped, this MPU Controller board jumper is set according to the installed communication Option Boards and will not need to be changed unless the selection of LIL, Modbus, or Ethernet communication changes. See Figures 9-2 and 9-3 in Section 9.1 Model 353RCM_ _ _ _B_.

14. Mount the power supply module on the control carrier. See Section 9.2 Model 353RPSUAD_. Refer to the nameplate on the power supply module for input power and output voltage and current specifications.
15. Refer to Sections 2.5 Universal Bus Addresses, 2.6 i|o Module Power and Keying, and 2.7 Locating a Field Termination Assembly and an i|o Module to install the i|o field termination assemblies and i|o modules. Refer to Section 9 Module Wiring and Specifications, in the subsection for each module type, for module specifications. Each subsection also provides wiring details. If a module and termination assembly must be relocated, refer to the appendices. Range resistors, crimp-on connectors, and TC reference junctions are supplied in Installation Kits that accompany the control carrier.
16. Install the workstation.
    - i|station: Mount i|station in a panel cutout or install it on a desk using a desktop mounting kit. Refer to Section 10 i|station Installation in this manual and to the manual(s) provided with i|station for panel cutout dimensions and the location of connectors. Connect i|station to Model 353R as described in Section 10 i|station Installation.
    - Personal computer: If installing a person computer rather than i|station, refer to Section 10 i|station Installation and to the manuals supplied by the PC manufacturer. Also, see the preceding section and the manuals supplied on i|ware and i|config CDs to install the software.
17. Check power and field wiring and module locations before applying power. After ensuring that all wiring is correct and that all plant procedures and safeguards have been observed, power may be applied. LED indications during the power up period are described in Section 13.4 Troubleshooting. Local faceplate displays are described in Section 12 Controller and System Test. If a RED LED remains lighted after the power up sequence, refer to Section 13 Maintenance for troubleshooting suggestions.

    FCO-101 is pre-installed in 353R unless another configuration is specified on the order. If you have created a new configuration using the i|config Graphical Configuration Utility, download this configuration to 353R.
    - Local Faceplate Installed - See Section 12 Controller and System Test and perform the provided steps.
    - i|station Installed - Refer to the Getting Started manual and other books on the i|ware CD. When power is applied to an i|station that has i|ware loaded, and a configuration is loaded in 353R, the Windows desktop will be displayed initially. Double click on the i|ware icon to run i|ware and initiate auto-configuration.
18. Perform any additional tests required by your company’s startup, commissioning, and system documentation procedures.

2.5 UNIVERSAL BUS ADDRESSES

The 353R Ubus accommodates up to 31 i|o modules on one control carrier and several module carriers. Module carriers may be a single type or a combination of 4-module carriers and 8-module carriers. A typical carrier selection with slot numbers and Ubus addresses is shown in Figure 2-1.

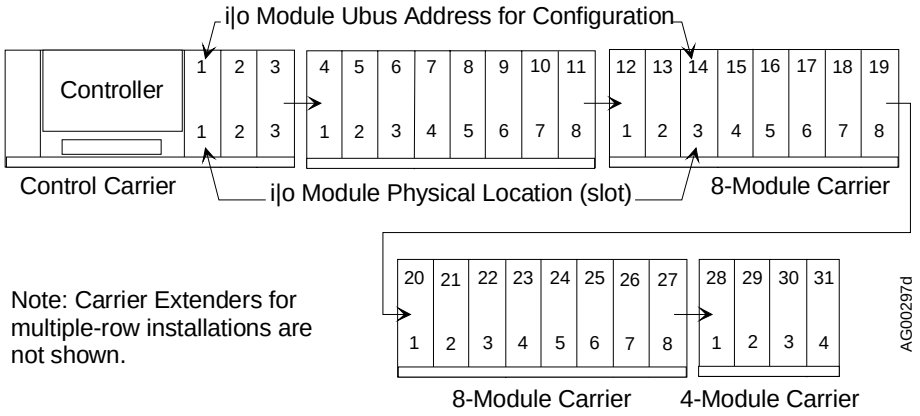

FIGURE 2-1 Carrier Selection and Ubus Address Numbering

IMPORTANT

While a 4-module carrier is shown above for Ubus addresses 28-31, an 8-module carrier may be used. However, only slots 1-4 may receive modules. Slots 5-8 **may not be used**. A module blanking kit should be installed over each unused slot.

Each module location (or slot) has an assigned Universal Bus address. When a module is installed in a slot, the associated Ubus address is entered during configuration (e.g. slot location 3 on the second 8-module carrier is Ubus address 14). The slot number (3) is the physical location as contrasted to the Ubus address (14) that is the bus location entered during configuration.

When a slot does not have a module installed, the empty slot must be counted as one of the 31 contiguous slots and the address for that slot must not be used. If a module is moved to another slot after its address has been entered in a configuration, be sure to edit the configuration and enter the module's new address. Installing a module blanking kit to cover unused slots is recommended. This can prevent inadvertent insertion of a module in an unused slot and possible damage to that module.

2.6 I|O MODULE POWER AND KEYING

Table 2-1 summarizes i|o module power sources and keying. Refer to the completed Appendix A - Determine i|o Module Location drawings for the location of each module and field termination assembly. Figure 2-1 shows module locations (slot numbers) that are numbered beginning with the control carrier. Procedures for mounting a field termination assembly and an i|o module follow.

TABLE 2-1 i|o Module Power and Keying

MODEL NO.	FIELD CIRCUIT DESCRIPTION / POWER SOURCE	FIELD TERMINAL TYPE (see Note)	MODULE KEY CODE
iO-4TC	TC or mV input / Ubus Powered	T	C1
iO-4RT	RTD and Ohms / Ubus Powered	R	C3
IO-8AI-2	AI, 4-20 mA / 24 Vdc Bussed Field Powered	S	A1
IO-8AI-V	AI, 1-5 Vdc / 24 Vdc Bussed Field Powered	S4W	A1
iO-8AI-2H	AI, 4-20 mA (with HART) / 24 Vdc Bussed Field Powered	S, S4W, or NI	A1
iO-8AO	AO, 4-20 mA / 24 Vdc Bussed Field Powered	S or NI	A4
IO-8AO-H	AO, 4-20 mA / 24 Vdc Bussed Field Powered	S	A4
iO-8DI24DMN	DI, 24 Vdc / Buss Powered	S or NI	B1
iO-16DI24DMN	DI, 24 Vdc / Buss Powered	S16 or NI16	E1
iO-8DI24DSI	DI, 24 Vdc Floating / Field Powered	S or NA	B2
iO-16DI24DSI	DI, 24 Vdc Floating / Field Powered	NI16	E2
iO-8DI115AMN	DI, 115 Vac / Buss Powered	S or NA	E1
iO-8DI115ASI	DI, 115 Vac Floating / Field Powered	S or NA	E4
iO-8DI230AMN	DI, 230 Vac / Buss Powered	S or NA	E2
iO-8DI230ASI	DI, 230 Vac Floating / Field Powered	S or NA	E5
iO-8DO60DMN	DO, 24 Vdc / Buss Powered	S or NA	B6
iO-8DO60DEI	DO, 24 Vdc Floating / Field Powered	S or NA	B5
iO-8DO250AMN	DO, 120/230 Vdc / Buss Powered	S or NA	F1
iO-8DO250AEI	DO, 120/230 Vac Floating / Field Powered	S or NA	F4

Note: Field Terminal Type

R = RTD, Model iO-SRT-FT
S = Standard, Unfused, Model iO- SST8-FT or Standard, Fused, Model iO-FST8-FT
S4W = Standard, 4-wire, Model iO-S4W8-FT
T = Thermocouple, Model iO-STC-FT
NI* = Standard, Non-Incendive, Model iO-SNI8-FT or Fused, Non-Incendive, Model iO-FNI8-FT
NI16 = Standard, Non-Incendive, Model iO-SN16-FT
NA* = Standard Non-Arcing, Model iO-SNA8-FT or Fused Non-Arcing, Model iO-FNA8-FT
* Discontinued. For new orders or replacement parts, select an “S” field terminal type.

2.7 LOCATING A FIELD TERMINATION ASSEMBLY AND AN I|O MODULE

Before an i|o module can be installed, a compatible field termination assembly must be installed. Refer to the i|o Module Power and Keying table on the previous page and to Appendix A for i|o module and termination assembly model and location. Also, refer to the subsection in Section 9 Module Wiring and Specifications for the module to be installed to select the field terminal type and then to "Relocating a Module" in this section for location guidelines. Field terminals may be wired before the assembly is installed; to the appropriate subsection in Section 9 for the i|o module for wiring connections.

WARNING



Electrical shock hazard
Explosion hazard

Can cause death or injury

- Remove power from all wires and terminals before working on equipment.
- In potentially hazardous atmosphere, remove power from equipment before connecting or disconnecting power, signal, or other circuit.
- Observe pertinent regulations regarding installation in hazardous area.



Installation

1. Locate the three lugs in the holes provided on the control or module carrier as shown at right.
2. Press the assembly onto the carrier.
3. Slide the assembly toward the center of the carrier.
4. Rotate the two keys on the field termination assembly to the settings (e.g. A1) given in the i|o Module Mounting/Removal Guidelines Table 2-1 above so that they match the keys on the module. Use a small straight-slot screwdriver to rotate a key.
5. Press the module down onto the field termination assembly connectors and the carrier connector. See Figure 2-2.
6. Tighten the i|o module's captive screw. Maximum torque is 1 in-lb (0.11 Nm). Do not over tighten.
7. If the termination assembly was wired prior to installation, check that all wiring remains secure and did not loosen during the installation process.

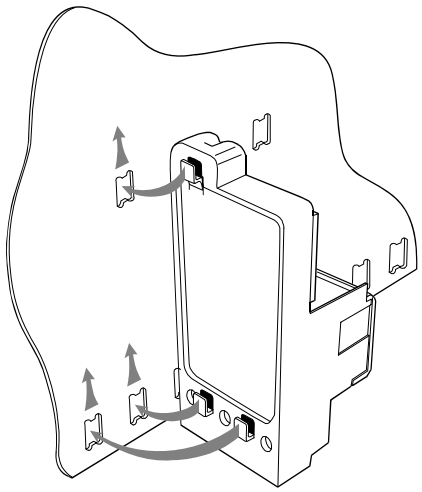

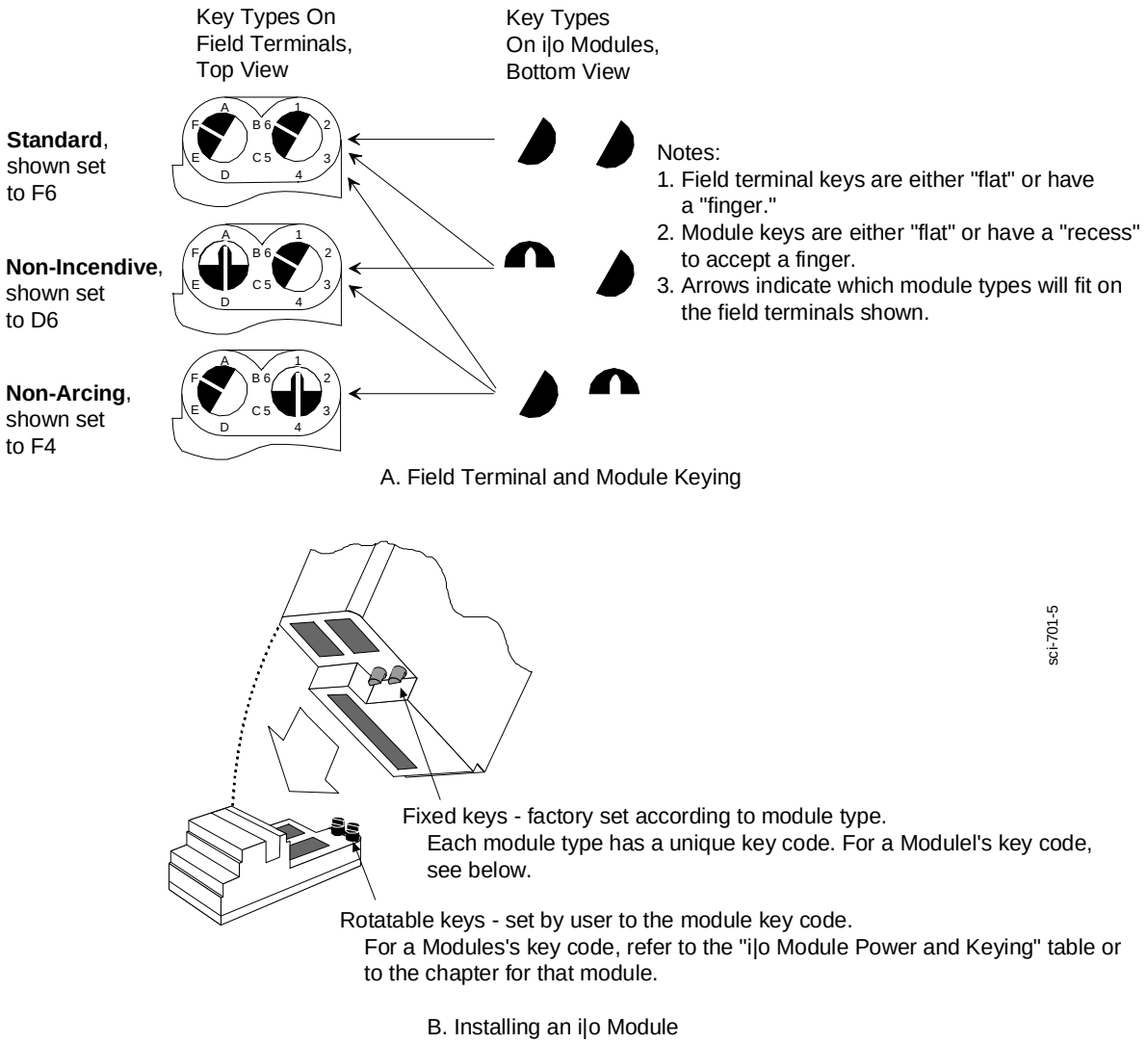

FIGURE 2-2 i|o Module Keying and Installation

Removal

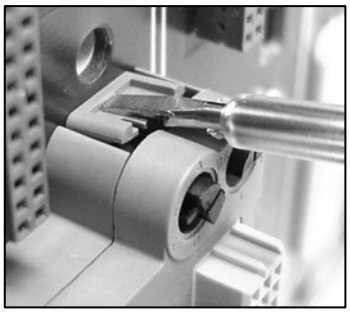

The i|o module and field termination assembly may be removed from the carrier without disconnecting field wiring.

1. In a hazardous area, remove power from the Ubus and the field terminals.
2. Using a straight-slot screwdriver, loosen the captive screw securing the i|o module to the carrier.
3. Pull the module from the carrier and termination assembly.
4. Note whether the termination assembly has a locking mechanism securing it to the carrier, as shown in the adjacent photograph.
   1) If the assembly has a lock, use a screwdriver or other tool to press the lock against the carrier circuit board. Hold the lock against the board and slide the termination assembly toward the edge of the carrier that has the Shield Earthing Bar. Then lift the assembly from the carrier.
   2) If the assembly does not have a lock, slide the termination assembly toward the edge of the carrier that has the Shield Earthing Bar. Then lift the assembly from the carrier.

After installing a wired termination assembly, be certain to check that all wiring connections are secure.

2.7.1 Relocating Modules

Should it be necessary to move one or more i|o modules to new slots, or install additional modules, go Appendix A - Determining i|o Module Location. The Appendix contains guidelines to help with carrier and slot selection and steps to identify system power supply requirements. Hardware selection may be affected.

2.7.2 Module Blanking Kit

Install this kit (Model iO-MBK) over a module slot on a control or module carrier to prevent the insertion of a module. For example, in Figure 2-1, a 4-module carrier is used as the last carrier. When an 8-module carrier is used, each of the last four slots should be covered with a module blanking kit to prevent the installation of a module. Another example is when bussed field power is employed and only one of the adjacent pair of locations contains a module. To prevent the possibility of a module being installed in the empty location, install a module blanking kit.

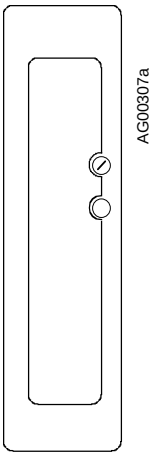

Install a module blanking kit as follows.

1. Remove the mounting screw from the inside the cover, align the two extrusions on the screw with the slot in the hole in the cover, and press the screw into the cover.
2. Place the cover over the selected module location and gently tighten the screw. Maximum torque is 1 in-lb (0.11 Nm). Do not over tighten.

■

3.0 CONFIGURATION OVERVIEW

Configuration enables a user to select function blocks, stored in the controller, from an available list and enter appropriate block parameters to implement a specific control strategy. Although configuration affects the entire station, the controller partitions related control implementations into LOOPS. A maximum of 99 loops can be configured and 25 can have operator displays that are mapped to network communications.

Each LOOP can contain the function blocks listed in the following paragraphs. Signals can be connected between function blocks within the LOOP as well as between loops. Also, there are several STATION function blocks that are fixed and available in the STATION menu for setting station related values.

Section 4 Function Blocks fully describes available function blocks. For tuning guidelines refer the Autotune Procedure in Section 11 Local Faceplate Operation or request AM-35 Digital Controller Tuning.

NOTE

This manual describes the functionality provided by the current MPU Controller Board firmware. Some function blocks and block parameters are not available in earlier firmware versions. Firmware versions are identified by the phrase "in version 1.3 and higher" or simply "V1.3" or "V2.4" in text.

3.1 STATION FUNCTION BLOCKS

Function blocks that are permanent and accessible at the STATION menu level:

FCO LIB.....**F**actory **C**onfigured **O**ptions **Lib**rary
STATN.....**Stat**i**on** Parameters
SECUR .....**Secur**ity
CLOCK .....real time **CLOCK** (requires firmware V2.2 and RTC/CB board)
ETHERNET.....**Ethernet** Communications (requires firmware V2.4 or higher and Ethernet board)

3.2 STATION HARDWARE I/O BLOCKS

Function blocks that are available during configuration depend on the hardware installed in the controller. These blocks can be selected within a LOOP but as fixed resources, once selected, are no longer available. The left column shows the minimum and maximum quantities of each block and the right column shows the quantity for each circuit board.

AIN*1-4* .....**A**nalog **In**put.....MPU Controller Board (3), I/O Expander Board (1)
AINU*1-2*.....**A**nalog **In**put, **U**niversal .....I/O Expander Board (2)
AOUT*1-3* .....**A**nalog **Out**put.....MPU Controller Board (2), I/O Expander Board (1)
DIN*1-4* .....**D**igital **In**put.....MPU Controller Board (3), I/O Expander Board (1)
DINU*1-2*.....**D**igital **In**put, **U**niversal .....I/O Expander Board (2)
DOUT*1-2* .....**D**igital **Out**put.....MPU Controller Board (2)
ROUT*1-2* .....**R**elay **Out**put .....I/O Expander Board (2)

3.3 LOOP FUNCTION BLOCKS

The following blocks are available as needed within each loop in the quantities indicated (the quantity is one if no number is shown). Some blocks (e.g. A/M, BIAS) can be used only once within each LOOP. Others (e.g. ADD) are reusable within a LOOP and can be used up to the maximum number indicated. Each time a reusable block is selected within a LOOP, a new instance number will automatically be assigned (i.e. ADD01, ADD02). Each LOOP can have one operator display block (i.e. ODC or ODS). The display block defines how the loop will be displayed on the local faceplate when that loop is selected and also how loop data will be mapped on the Modbus or LIL network interface. Each LOOP can have one controller function block (i.e. ID, ONOFF, PD, PID, or PIDAG).

A/M .....**A**uto/**M**anual
ACS*01-99*.....**A**R**C**Co**s**ine (V1.3)
ADD*01-99* .....**Add**ition
AG3.....**AG**A**3** (V1.3)
AG7.....**AG**A**7** (V1.3)
AG8.....**AG**A**8** (V1.3)
ALARM.....**Alarm**
AND*01-99* .....**AND** Logic
ASN*01-99*.....**A**rc**sin**e (V1.3)
ATN*01-99* .....**A**rc**tan**gent (V1.3)
ATD*01-99* .....**A**nalog **T**rend **D**isplay (V1.3)
BATOT.....**Ba**tch **Tot**alizer
BATSW.....**Bat**ch **Sw**itch
BIAS.....**Bias**
CHR*01-99*.....**Ch**a**r**acterizer
CMP*01-99*.....**C**o**mp**arator
COS*01-99*.....**Cos**ine (V1.3)
DAM*01-99* .....**D**eviation **Am**plifier
DIV*01-99* .....**Div**ision
DNC*01-99* .....**D**ivide by **N** **C**ounter
DTM*01-99* .....**D**ead **T**i**m**e Table
DYT*01-99* .....**D**ela**y** **T**imer
E/I.....**E**xternal/**I**nternal Transfer
ESL .....**E**vents **S**equence **L**ogger (V1.3)
EXP*01-99*.....Natural **Exp**onentiation (V1.3)
EXT*01-99*.....**Ex**ponen**t**iation (V1.3)
FTG*01-99*.....**F**alling Edge **Tri**g**g**er
GB*01-99*.....**G**ain & **B**ias
HLD*01-99* .....**H**o**ld**
ID.....**ID** Controller
LL*01-99* .....**L**ead/**L**ag
LMT*01-99*.....**Li**m**it**
LN_*01-99* .....**N**atural **L**ogarithm (V1.3)
LOG*01-99*.....**L**ogarithm Base 10 (V1.3)
MTH*01-99* .....**Ma**t**h**
MUL*01-99* .....**Mul**tiplication
NND*01-99* .....**N**A**ND** Logic
NOR*01-99*.....**NOR** Logic
NOT*01-99*.....**NOT** Logic
ODA .....**O**perator **D**isplay for **A**nalog Indication and Alarming (V2.2)
ODC .....**O**perator **D**isplay for **C**ontrollers
ODD .....**O**perator **D**isplay for **D**iscrete Indication and Control (V2.2)
ODP.....**O**perator **D**isplay for **P**ushbuttons (V2.2)
ODS.....**O**perator **D**isplay for **S**equencers
ONOFF .....**ON OFF** Controller
OR*01-99*.....**OR** Logic
ORSL .....**O**ver**r**ide **Sel**ector
OST*01-99*.....**O**ne **S**hot **T**imer
PB1SW.....**PB1 Sw**itch
PB2SW.....**PB2 Sw**itch
PB3SW.....**PB3 Sw**itch
PCOM.....**P**hase **Com**munication (V1.3)
PD.....**PD** Controller
PID .....**PID** Controller
PIDAG .....**PIDAG** Controller
PRSEQ.....**Pr**ogram **Seq**uencer
QHD*01-99*.....**Q**uickset **H**ol**d**
RATIO.....**Ratio**
RCT*01-99* .....**R**epeat **C**ycle **T**imer
RLM*01-99* .....**R**ate **Li**m**i**ter
ROT*01-99* .....**R**etentive **O**n **T**imer
RSF*01-99* .....**RS F**lip-Flop
RTG*01-99* .....**R**ising Edge **Tri**g**g**er
RTT.....**R**eal **T**ime Clock **T**rip (V2.0)
SCL*01-99*.....**Sc**a**l**er
SEL*01-99* .....Signal **Sel**ector
SETPT .....**Setp**oin**t**
SIN*01-99* .....**Sin**e (V1.3)
SPLIM .....**S**et**p**oint **Lim**it
SRF*01-99* .....**SR F**lip-Flop
SRT*01-99*.....**S**quare **R**oo**t**
SUB*01-99*.....**Sub**traction
TAN*01-99* .....**Tan**gent (V1.3)
TH*01-99*.....**T**rack & **H**old
TOT*01-99* .....**TOT**alizer (V2.3)
TSW*01-99*.....**T**ransfer **Sw**itch
XOR*01-99*.....E**x**clusive **OR** Logic

3.4 ETHERNET DATA I/O FUNCTION BLOCKS

These function blocks are available in the quantities indicated within a controller when the optional Ethernet Network board is installed. The plug-in Ethernet board is available with the 353R controller. These blocks can be selected for use within individual loops but block names are unique station wide. The Ethernet function is also available in an externally mounted module for use with other controllers (i.e. 352P, 353, 354N) communicating via the Modbus port.

AIE*01-32*.....**A**nalog **I**nput - **E**thernet (V3.0)
AOE*01-32*.....**A**nalog **O**utput - **E**thernet (V2.4)
AWE*01-32*.....**A**nalog **W**rite **E**nable (V3.0)
CIE*01-32*.....**C**oil **I**nput - **E**thernet (V3.0)
CWE*01-32*.....**C**oil **W**rite **E**nable (V3.0)
DIE*01-32*.....**D**iscrete **I**nput - **E**thernet (V3.0)
DOE*01-32*.....**D**igital **O**utput - **E**thernet (V2.4)
DWE*01-32*.....**D**igital **W**rite **E**nable (V3.0)

3.5 LIL GLOBAL DATA I/O FUNCTION BLOCKS

These function blocks are available in the quantities indicated within each loop when the optional LIL Network board is installed. The total number of global function blocks is limited by the number of global channels available. A controller has 256 channels. Each global data block occupies one global channel. In addition, each configured Control LOOP occupies 5 channels, each configured Sequencer LOOP 6 channels, and the Station itself the first 7 channels. See Section 6 Network Communications for more information on network communications.

AIL*01-99*.....**A**nalog **I**nput_**L**IL
AOL*01-99*.....**A**nalog **O**utput_**L**IL
DIL*01-99*.....**D**iscrete **I**nput_**L**IL
DOL*01-99*.....**D**iscrete **O**utput_**L**IL

3.6 UNIVERSAL BUS I|O MODULE FUNCTION BLOCKS

These function blocks are available with the 353R controller. These function blocks correspond to available i|o modules and provide simple integration of the i|o modules into the 353R controller configuration. These function blocks contain the configuration of the i|o modules and provide plug-and-play capability when the module is installed. Up to 31 modules can be plugged into the Universal Bus and 31 corresponding function blocks can be used in the 353R configuration.

UAH*01-31*.....**U**niversal bus **A**nalog **H**ybrid (4-channel AI and 4-channel AO, 4-20 mAdc) – (V2.3)
UAI*01-31*.....**U**niversal bus **A**nalog **I**nput (8-channel 4-20 mAdc with HART) - (V2.0)
UAO*01-31*.....**U**niversal bus **A**nalog **O**utput (8-channel 4-20 mAdc) - (V2.0)
UDI*01-31*.....**U**niversal bus **D**igital **I**nput (8-channel) - (V2.0)
UDO*01-31*.....**U**niversal bus **D**igital **O**utput (8-channel) - (V2.3)
UEI*01-31*.....**U**niversal bus **E**xtended Digital **I**nput (16-channel) - (V2.0)
UER*01-31*.....**U**niversal bus **E**xtended **R**TD (8-channel RTD input) – (V2.3)
UET*01-31*.....**U**niversal bus **E**xtended **T**/C (8-channel thermocouple input – (V2.3)
URI*01-31*.....**U**niversal bus **R**TD **I**nput (4-channel) - (V2.0)
USD*01-31*.....**U**niversal bus **S**olenoid **D**river (4-Channel) – (V2.3)
UTI*01-31*.....**U**niversal bus **T**hermocouple **I**nput (4-channel) - (V2.0)

3.7 CONFIGURATION PROCEDURE

Each controller must be configured to perform the desired control strategy. The arrangement of functions and the numerical data required for a particular control circuit are referred to as the controller configuration. Local and remote configurations are accommodated.

Local configuration involves the configuration pushbuttons and the pulser knob on the Local Faceplate. Going On-Line shows the faceplate and provides brief descriptions of control functions.

Remote configuration requires an i|station (or a personal computer) running the i|config Graphical Configuration Utility and either a communications cable or a Modbus, LIL, or Ethernet communications board and network connection. The configuration can be created at and downloaded from i|station or PC. A Modbus or LIL wired connection is made to the controller's NCA and NCB terminals. A Modbus communications cable can plug into P1 on the control carrier and to the i|station serial port (an MMJ11 to DB9 adapter is needed) or to a modem. An Ethernet connection can be made to connector P4, an RJ-45 connector, on the control carrier.

WARNING

Explosion hazard

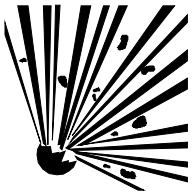

Explosion can cause death or serious injury.

In a potentially explosive atmosphere, remove power from the equipment before connecting or disconnecting power, signal, or other circuits.

All pertinent regulations regarding installation in a hazardous area must be observed.

A configuration is designed by first arranging the needed function blocks in a fashion similar to that of a P & I drawing. Parameter and calibration values are determined next and then entered on a Configuration Documentation Form or into the Graphical Configuration software. The controller may then be configured locally by entering the information on the form into the controller's configuration memory or remotely by downloading directly from the personal computer.

Nine common controller configurations have been stored in a built-in library that can be entered from the FCO LIB function block at the STATION level. Simple changes can then be made to accommodate individual needs. As an example, FCO101 Single Loop Controller includes the setpoint tracking feature but by simply disconnecting the TC input to the SETPT function block, it becomes a fixed setpoint Single Loop Controller. These FCO's are fully documented in Section 4 Function Blocks.

FCO101 - Single Loop Controller w/ Tracking Setpoint
FCO102 - Single Loop Controller with Fixed Setpoint
FCO103 - External Set Controller with Tracking Local Setpoint - (V1.30)
FCO104 - External Set Controller with Non-Tracking Local Setpoint - (V1.30)
FCO105 - Ratio Set Controller with Operator Setpoint Limits
FCO106 - Single Loop Controller w/Operator Setpoint Limits
FCO107 - Dual Loop Controller - (V1.30)
FCO121 - Cascade Loop Controller
FCO122 - Cascade Loop Controller with Operator Setpoint Limits

Unless otherwise specified on the order, FCO101 is pre-installed. Use the following procedure to change the factory configured option. Refer to Figure 3-1 Configuration Road Map on a following page to move through the selected FCO and enter or edit parameter values.

1. Press ENTER/EXIT CONF button. LOOP will appear on the alphanumeric display.
2. Rotate Pulser Knob until STATION appears on alphanumeric display.
3. Press STEP DOWN button to display FCO LIB.
4. Press STEP DOWN button to display FCO in the lower display.
5. Press STEP DOWN button for FCO number to appear in upper display.

6. Rotate the Pulser Knob to display the desired FCO number in the upper display.
7. Press STORE button to load the new FCO.
8. Edit the FCO as needed. In addition to the material in this section, refer to:
    - Section 4 Function Blocks for details about configuration parameters
    - Section 5 Factory Configured Options for details about pre-configured configurations
    - Section 6 Network Communication for details about data mapping.
    - Section 11 Local Faceplate Operation for use of faceplate pushbuttons, displays, and pulser knob.

Where an FCO is not suitable, a complete configuration can be designed to suit individual needs. The sections listed above can be used as a guide for documenting an individual configuration. i|config, the PC-based Graphical Configuration Utility, can be used to design, document and save configurations as well as download them to the controller, either through the configuration port or using a Modbus, LIL, or Ethernet network connection.

The above steps are illustrated in the Configuration Road Map. The map also provides a broad overview of the configuration procedure.

- Press the ENTER CONF button to enter the configuration mode. Press the button again to exit configuration.
- After entering the configuration mode, LOOP or STATION can be selected.
- At the STATION level, factory configured options can be entered, station parameters can be configured, security passwords can be entered, the clock can be set, the communication parameters can be configured, and all inputs and outputs can be calibrated.
- Calibration can also be performed within individual loops containing the input or output function blocks used in the LOOP.
- At the LOOP level, new loops can be added, loops can be deleted or an existing loop can be edited.

When a new loop is created, the controller will assign a default name (e.g. LOOP01). A loop name can be changed to any valid 12-character ASCII value. It is suggested that loop names be limited to 6 characters so that the complete tag name will be displayed in the alphanumeric during normal operation.

A Loop can be edited by stepping down from the EDIT menu. If more than one loop has been created, press the STEP DOWN button and turn the Pulser Knob to step through the list of configured loops. From the selected loop, stepping down will provide various options within the specific loop.

- The current value of all configured block outputs can be viewed.
- The current tag name of the loop and the ESN (Execution Sequence Number) can be changed. ESNs are automatically assigned by the controller in the order of creation, either a loop or individual block. An ESN should be changed when it is important that one loop be executed prior to another (e.g. cascade primary executes prior to the cascade secondary).
- Function blocks can be added to or deleted from the loop. Existing function blocks can be edited. Use the step up and step down buttons to move between the function block, parameter, and value levels within the EDIT FB menu.

If no configuration entries are made for about three minutes, the mode will time out and the controller will exit the configuration mode. The STATN function block has a CONFIG TO (Configuration Timeout) parameter to enable or disable timeout.

Loading an Earlier Firmware Version

In rare instances, replacing the installed MPU Controller board firmware with an earlier version may be desired. Before loading the earlier version, refer to the sections on configuration and load FCO-0 (zero) as the active configuration. This will install a minimum configuration and will reduce the number of error messages that appear during the firmware loading process.

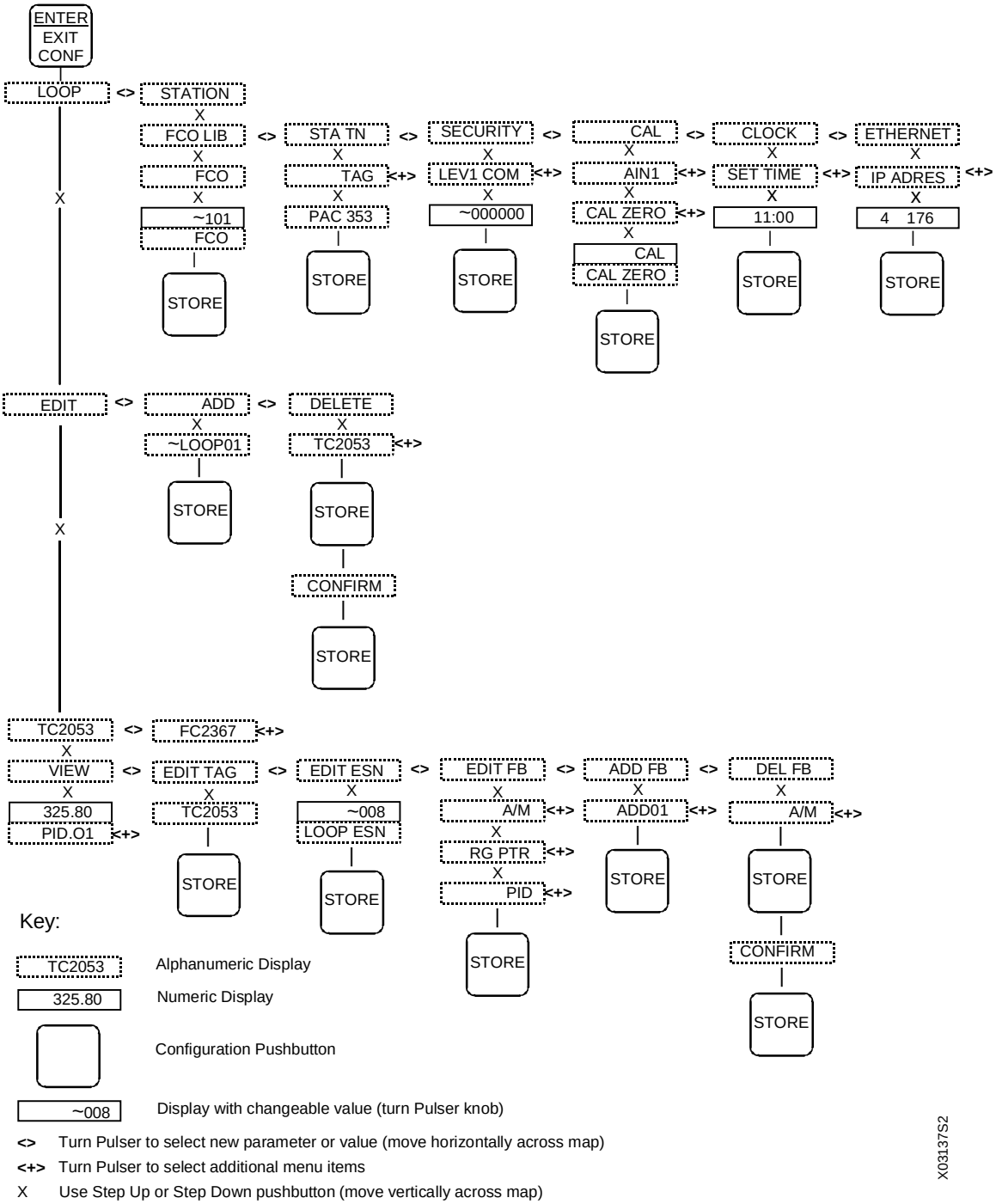

FIGURE 3-1 Configuration Road Map

3.8 OPERATION DURING LOCAL ON-LINE CONFIGURATION

Changing a controller's configuration parameters while the station is on-line can affect its operation and output values. Configuration parameters are divided into four types: HARD, SOFT, READ, and CALIBRATION.

HARD - When a HARD parameter is STORED, the controller will suspend execution of all function blocks and will hold all outputs until the EXIT button is pressed. A HARD parameter is identified with each '(H)' notation in a function block parameter listing.[2] Also, when a loop or function block is added or deleted, the station enters a HARD configuration mode.

SOFT - A SOFT function block parameter can be changed while the function blocks are executing. A SOFT parameter is identified with each '(S)' notation in a function block parameter listing. All QUICKSET changes also fall into this category.

READ - These parameters are not changeable and therefore can be read while the station function blocks are executing. A READ parameter is identified with each '(R)' notation in a function block parameter listing. The configuration VIEW mode also falls into this category.

CALIBRATION – To calibrate a parameter, enter CONFIGURATION mode, navigate to CAL, select a function block, and finally select a parameter to calibrate. At this point, the station will suspend execution of all function blocks and it will hold all outputs until the EXIT button is pressed. If an output block is being calibrated its output will be adjusted during the calibration procedure. A calibration parameter is identified with a '(C)' notation in a function block parameter listing in Section 4 Function Blocks.

3.9 REAL TIME CLOCK/CONFIGURATION BACKUP

A Real Time Clock/Configuration Backup (RTC/CB) board is a 353R option. It includes a real time clock chip. When this board is used with 353R controller firmware version 2.0 or higher the CLOCK block and RTT (Real Time Trip blocks will be active).

The RTC/CB board retains a complete copy of the configuration being used by the controller in which it is installed. Should that controller fail, the board can be removed and installed in the replacement controller. The stored configuration can then be selected as the active configuration in the controller.

On power up, the controller will test the RTC/CB board and compare the stored configuration to the controller's configuration. If the board passes all tests and the configurations are identical, the controller will power up normally and use the configuration from the MPU board. If a problem is detected or the configurations are different, an ON-LINE STATUS or OFF-LINE ERROR message will be displayed. See Section 13 Maintenance for messages.

The board is located in the 353R control module as shown in Section 9.1 Model 353RCM_ _ _ _B_. There are no user settable components on the board. When installing or replacing the board, a local faceplate is needed. Refer to Section 13.5 Assembly Replacement in the Maintenance section for additional details.

■

[2] *See Section 4 Function Blocks*

4.0 FUNCTION BLOCKS

This section provides descriptions of the function blocks (FB's) used to configure the 353R controller[3]. A detailed description is provided for each function block available for configuration. Each function block description is supplemented by: (1) a drawing of the block showing data inputs and outputs and control lines, (2) a block parameter table. Most blocks are further described by a block diagram that shows the block's circuitry in a simplified or equivalent circuit form.

NOTE

This manual describes the functionality provided by current MPU Controller Board firmware. Some function blocks and block parameters are not available in earlier firmware versions. Each firmware version is identified by a firmware version number. For example: in the phrase "in firmware 2.4 and higher" or simply "(2.4)."

Function blocks have three types of inputs/outputs: digital, analog, and special data structure.

1. Arrows with dark shading and white letters are digital (outputs are displayed as 0 and 1 in the VIEW mode when using the local faceplate). Digital outputs are typically used to designate function block status, logical outputs, and on/off function block outputs. Some examples are:
   - Function block status: E/I status (IS, ES, SI), A/M status (AS, NA, MS, ES, SS), and Quality Status (QS)
   - Logical Outputs: AND (01), OR (01), NOR (01), or NOT (01)
   - On/Off function blocks: One Shot Timer (01), Retentive On Timer (01), Rising Edge Trigger (01), Alarms (A1, A2, A3, and A4), and Comparator (01)
2. Arrows with medium shading and black letters are analog. Internally they are REAL floating point numbers and outputs of these types will be displayed in the VIEW mode when using the local faceplate with the decimal point located to allow greatest resolution between 0.00000 and 999999 or -0.0000 and -99999. Numbers outside this resolution will blink.

   Analog outputs are typically output (01) for analog I/O blocks and math functions. Analog outputs may also be specific to a particular function block such as the Analog Output (AO), Step Number (SN), Step Time (ST), Remaining Time (RT), and Current Recipe (CR) outputs of the Program Sequencer.
3. Arrows with medium shading and black letters but with a white tip are special data structures for range scaling information and will not be displayed in the VIEW mode). Range scaling information is used when there is a conversion of units within a function block, for example the Alarm block scales the alarm limits into process engineering units when the range pointer is configured to the process analog input block. If unconfigured the units default to 0-100%. The output range (OR), typically used on analog output function blocks, includes MIN and MAX SCALE, the DPP (Decimal Point Position), and the ENGUNITS (Engineering Units). The analog output block is typically used for a 0-100% output to a valve where a minscale of 0 = 4 mA output and a max scale of 100 = 20 mA output.

   The output range is connected to the Range Pointer (input R) of functions blocks requiring scaling other than the default 0-100. For example, an Analog input block could be scaled 0-5000 psig with output (01) connected to the AOUT input (S) and the AIN (OR) connected to the AOUT input (R). The Analog output would then output 4 mA at a minscale of 0 psig and 20 mA at a maxscale of 5000 psig. In contrast, if AOUT input (R) were left unconfigured the output would equal 4 mA at a minscale of 0 psig, 20 mA at a maxscale of 100 psig and over ranged for any input over 100 psig.

   Some users may prefer to use normalized 0-1 analog inputs for math calculations and scale outputs for display only; in this case, the Scaler function block may be used to provide an output range (OR) for the ODC (Operator display block).

[3] *LonWorks® function blocks AIP, AOP, DID, DIS, DOD, and DOS are included in the firmware but are not described in this manual since Model 353R features the Universal Serial Bus (Ubus). Therefore, only Ubus function blocks are described.*

Note how the range pointers are used in the following Factory Configured Options (FCOs). FCOs are described in detail in Section 5 Factory Configured Options.

- FCO101 Single Loop Controller – The process output range AIN1 (OR) is connected to the range pointer of the SETPT block, the PID block, the ALARM block and the process variable range of the ODC block. As a result these blocks will be automatically rescaled when the minscale and the maxscale or the engineering units of the Process is changed. For example, if AIN1 is scaled 0-5000, the 0-100% bargraph on the display will represent 0-5000 when displaying the process. The A/M block, AOUT1 (Valve) output, and the Valve input of the ODC block are scaled based on the output of the PID block.
- FCO104 External-Set PID controller – The external setpoint is displayed as variable X in the ODC block. Therefore, the ODC (RX) input uses the range output of the external setpoint AIN2 (OR) for scaling. The 0-100% bargraph will represent the range of AIN1 when displaying the process variable and the range of AIN2 when displaying the X variable.
- FCO105 Ratio Set Control – AIN1 and AIN2 are scaled 0-100% of flow. The ratio of these flows is displayed on variable Y and the scaler function block is used to define the engineering units as a dimensionless ratio CF/WF scaled from 0.50 –1.50.

Connections between blocks are allowed only with similar data types.

To help you quickly locate a function block:

- In Section 3 Configuration Overview, function blocks are listed by broad function (e.g. station hardware I/O).
- In Section 4 Function Blocks, this section, function blocks are listed alphabetically by the block ID (e.g. AIN for Analog Input).

4.1 STATION FUNCTION BLOCKS

Station function blocks include factory configured options (FCOs), security, and station parameters. Each is described in the following subsections.

4.1.1 FCO LIB - Factory Configuration Library

The FCO LIB function block provides a selection of pre-configured applications. An FCO can be selected from the library and "STORED". This loads a complete controller configuration, as defined by the FCO documentation, and erases any previously stored configuration. Station parameters and Calibration are retained when a new FCO is loaded. This enables a user to quickly configure the controller with an FCO without having to re-calibrate or re-enter the Station parameter values.

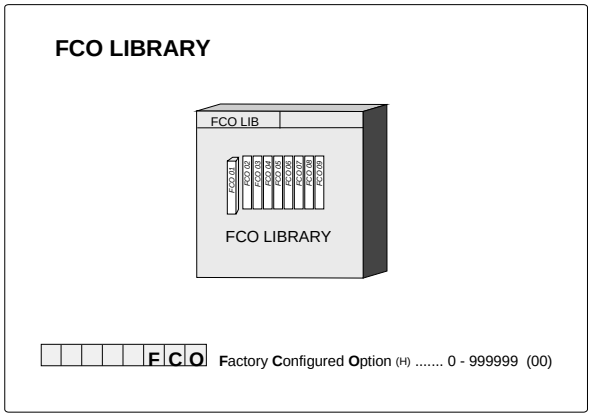

Upon stepping down to the FCO parameter, the last FCO that was loaded in the controller will be displayed. Turning the pulser knob will then display other FCOs that are available in the FCO library.

The configuration installed at the factory will be either FCO 101 or a custom configuration that was ordered and defined by the user. FCO 101 is a basic single loop PID controller.

An FCO can be loaded at any time in the field and used as is or modified (edited) to meet individual requirements. The FCO library file is not modified when the FCO selected for controller configuration is edited.

4.1.2 SECUR - Security

The SECUR function block enables a user to lock out portions or all of the faceplate configuration functions. Five levels of security are available; see Table 4-1. Each level is factory set at 000000 (no security) and can be changed by the user in the field to any number up to 999999.

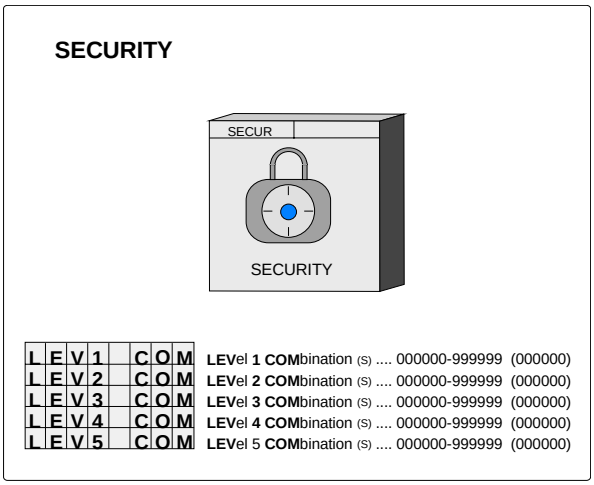

A security combination should be assigned to each security level (1-highest, 5-lowest). A level that remains at the default 000000 combination will have no security for the involved function(s) regardless of the security assigned to the other levels. For example, assume that level 1 is assigned a security combination but level 4 remains at 000000. If a controller calibration is performed, the station will not prompt the user for the security combination and anyone will be able to store new calibration values.

If security is desired, it is recommended that all 5 levels of security be set with either the same value or different values when different individuals are granted access to only certain functions.

The functions that can be accessed at the various security levels are listed in Table 4-1. The security combination will be required when the user attempts to store a parameter or attempts to view a security combination. The faceplate alphanumeric will display "ENTR COM" and allow the user to enter and store the combination. A combination is entered by selecting one digit at a time using the ← and → keys and setting the number for that digit using the pulser. When all digits have been set, press STORE. If incorrect the alphanumeric will display "ACCESS/DENIED" and then return to the parameter level. Once a combination has been entered correctly, access will be provided for all functions within that level until the user exits configuration. If a combination is lost, contact Technical Support to register and obtain a method to enter configuration and change the security codes. Refer to Section 1.6 Customer/Product Support for contact information.

The PC-based Graphical Configuration Software may also have security options similar to the above. However, there is no security in the download procedure itself. At the controller there are parameters in function block STA_PARM that will lock out all downloads and all parameter writes from a PC.

TABLE 4-1 Security Level vs. Accessible Operations

FUNCTION	LEVEL 1	LEVEL 2	LEVEL 3	LEVEL 4	LEVEL 5
Station Function Block Edit	X	X			
Loop/Function Block Add/Delete	X	X			
Loop/Function Block Edit	X	X	X		
Security Configuration	X				
Calibration of Input/Outputs	X			X	
Quick Faceplate Access*	X	X	X		X
Configuration of NEW FCO	X	X			
Change CLOCK	X	X			

* Security does not apply, in firmware versions 1.30 and higher, to continuously adjustable quickset parameters that include RATIO, BIAS, and QHLD.

4.1.3 STATN - Station Parameters

The STATN function block enables entry of station identification and other station related information. When the station is networked using Modbus or the LIL option board, the address is used by higher level devices to obtain information from the station. LIL addresses range from 1-32 or 1-64 when a Model 321 Expansion Satellite is used. Modbus can range from 1-250 but normally 1-32 is used to correspond to the total number of devices that can be installed on a single network.

Once the address has been assigned and higher level devices have been configured to access information from the station, changing the address can require reconfiguration of the higher level device. There may also be higher level devices that will query and assign addressing information based on the station tag name. In this case, a tag name change will also require reconfiguration of higher level devices. Therefore, it is important not to change the station identification without being aware of system consequences.

STATION PARAMETERS

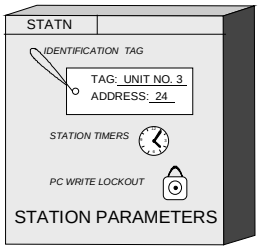

TAG	Station **TAG** (S) ..... 12 Char ASCII	(PAC 353)
ADDRESS	Station **ADDRESS** (H) ..... 0 - 250	(0)
WARM TIM	**WARM TIM**er (sec) (S) ..... 0 - 999999	(10)
COLD TIM	**COLD TIM**er (sec) (S) ..... 0 - 999999	(100)
WATCHDOG	**WATCHDOG** timer (sec) (S) ..... 0 - 1000	(0)
CONFIG	**CONFIG Transfer L**ock **O**ut (S) ..... NO/YES	(NO)
PARAM	**PARAM**eter **L**ock **O**ut (S) ..... NO/YES	(NO)
SERIAL #	**SERIAL #** (R) ..... 0 to 99999999	(xxxxxxxx)
IEEE REV	**IEEE** Floating Point **REV**erse (S) . NO/YES	(YES)
RPORT BAUD	**R**ear **P**ort **BAUD** rate (S) ..... (Table 2)	(5)
RPORT DELAY	**R**ear **P**ort **DELAY** (S) ..... 0 - 1000 msec	(0)
FPORT BAUD	**F**ront **P**ort **BAUD** rate (S) ..... (Table 2)	(6)
F P RTS	**F P RTS**/CTS handshaking (S) ..... (Table 2)	(1)
FPORT DELAY	**F**ront **P**ort **DELAY** (S) ..... 0 - 1000 msec	(0)
HWPRES	**H**ard**W**are **PRES**ent (R) .....(Table 3)	
CTBASE	**C**ycle **T**ime **BASE** msec (R) ..... 20 to 2000	
CTBIAS	**C**ycle **T**ime **BIAS** msec (H) ..... 0 to 1000	(0)
CMAVAIL	**C**onstant **M**em **AVAIL**able bytes(R)..varies w/ software rev	
VMAVAIL	**V**olitile **M**em **AVAIL**able bytes(R).....varies w/ software rev	
BATOK	**BAT**tery **OK** (R) ..... NO/YES	
SERPIN	**SERV**ice **PIN** (S) ..... (press STORE to activate)	
CONFIG TO	**CONFiG**uration **T**ime **O**ut (H) ..... NO/YES	(YES) *

* Available with Firmware version 1.30 or later

There are two timers used during power up initialization: WARM TIM and COLD TIM. The station takes approximately 8 seconds to perform power up initialization before the power up time is evaluated. A timer should be set to a value greater than 8 seconds to be effective. A timer setting of 0 will be considered as infinite (e.g. to always power up hot, set the warm timer to 0). When the station powers up after a loss of power but prior to the expiration of the warm timer, the station will execute a Hot Start. If the station powers up after the warm timer expiration but prior to the expiration of the cold timer, the station will execute a warm start. In all other cases, the station will execute a cold start. The adjustable range of these timers is 0-18000 seconds for firmware versions prior to than 1.30 and is 0-999999 seconds for versions 1.30 and higher. IMPORTANT: The Real Time Clock jumper must be set for the warm and hot timers to function. See Section 13 Maintenance for details on this jumper.

When using Modbus Network communications, the WATCHDOG timer can be set to a value other than 0 to cause a high WD output from the loop operator display function block when the station does not receive a computer command within the timer period. A value of 0 disables the watchdog. A Modbus communications DELAY time can entered for both the MMJ-11 communications port and the LIL/Modbus NCA/NCB field terminals, front and rear ports respectively. This may be necessary when the station responds too quickly for the modem. Modbus masters may handle IEEE floating point numbers in a different word order. The IEEE REV parameter allows matching the station with the Modbus master being used.

The CONFG LO (Configuration Lockout) parameter (V2.4) - renamed from DWNLD LO in previous versions - and the PARAM LO (Parameter Write Lockout) parameter provide a method for locking out configuration transfers and parameter read/writes from a PC over a Modbus or LIL network. The parameter lockout does not affect the global updates on the LIL.

The 8-digit SERIAL # of the station is stored in memory and can be viewed when this parameter is displayed. If only seven digits are seen, assume a leading zero.

BAUD rate parameters set the Modbus port characteristics; see Table 4-2. The network Modbus port at terminals NCA and NCB is RS485 and uses the assigned station address. The MMJ-11 communication port is RS-232 and uses an address of 1.

The Cycle Time of the station can be viewed as a parameter within the STATN block. In addition, a bias can be added to increase the total cycle time of the station. This may be necessary when significant communications activities are taking place, causing communication overrun errors. Adding bias will allow the processor more time during each scan cycle for completing the communication chores.

The station can be configured to time out of the configuration mode after 1 minute of no faceplate operations by setting the CONFG TO parameter to YES (default). This parameter is in firmware versions 1.30 and higher.

TABLE 4-2 Modbus Port Baud Rate Parameters

PARAMETERS	SETTINGS	
Data Formatting	8 bits, no parity, and 1 stop bit	
Baud Rate Selections	1 - 300 2 - 1200 3 - 2400 4 – 4800	5 - 9600 6 - 19200 7 - 38400
Handshaking Selections	1. No handshaking is used. 2. The station port will turn on the RTS line when it's ready to send data but will not wait for a responding CTS from the receiving device. 3. The station port will turn on the RTS line when it's ready to send data and will wait for a responding CTS from the receiving device before transmitting.	

A list of the installed controller hardware and software can be viewed within the STATN block using the HW PRES read only parameter. As shown in Table 4-3, each board has an ID and a hardware revision, and most also have a software revision. The controller's operating Kernel and operating code reside on the MPU Controller board and there is an entry in the table for each. The table lists the hardware and software revisions. For example, in Table 4-3, the MPU Controller board would be shown in the numeric display as '41 2.01'.

TABLE 4-3 Board Description and ID with Example Hardware and Software Revisions

DESCRIPTION	BOARD ID	HARDWARE REVISION	SOFTWARE REVISION
Kernel (software)	0	1	1.21
MPU Controller board	4	1	2.01
Local Faceplate assembly	2	1	2.01
I/O Expander board	3	1	2.01
Ethernet board	6	1	2.40
Local Instrument Link board	8	1	2.01
RTC/CB board	b	1	2.01

Check the NVRAM battery condition by reading the BAT OK parameter. The NVRAM, on the MPU Controller Board, uses a sealed lithium battery that has a life of up to 40 years.[4] The battery powers a portion of memory that stores operating data when external power is removed from the controller. When external power is next applied, the controller will read this data and return to the stored operating conditions. Should the battery fail, the station will power up in a Cold start using the controller configuration stored in permanent FLASH memory. Battery condition has no effect on normal operation while external power is applied.

[4] *With the Real Time Clock jumper properly set, as described in the Maintenance section, up to 40 years for an on-line controller or for a stored MPU Controller Board or controller.*
Up to 4 years for a stored MPU Controller Board or controller with the Real Time Clock jumper improperly set (i.e. clock enabled). Environmental conditions can affect battery life.

4.1.4 CLOCK - Real Time Clock (V2.0/2.2)

The CLOCK function block is available when the RCB option board is installed in the controller and the controller includes firmware version V2.0 or higher. RCB boards shipped prior to July 1999 did not include the real time clock function. The board including this option has been named "Real Time Clock/Configuration Backup" (RTC/CB).

REAL TIME CLOCK

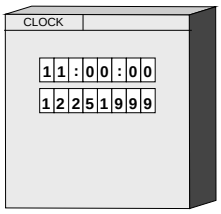

SET TIME	**SET TIME** ..... 00:00:00 to 23:59:59	(0)
SET DATE	**SET DATE** ..... 01011970 to 12313099	(0)
SRCE ADD	**SouRCE ADDress** ..... 0 - 64	(0)

This function block enables the current time and date to be viewed when using the local faceplate. When the Step Down Button is pressed to view the parameter value, the current TIME or DATE at that instant is displayed. The value can be changed using the pulser and the ← and → arrow buttons to enter a new value. The new value will initialize the clock when the STORE button is pressed.

When the SRCE ADD parameter (version 2.2) has been configured with the address of the controller on the LIL that is to act as the time synchronization master, the controller will query the master controller at 12 midnight and synchronize its time with the master. An address of zero will prevent an attempt at synchronization. Synchronizing controllers must have RTC/CB and LIL network boards installed and must be wired to a LIL.

4.1.5 ETHERNET - Ethernet Communication Network (V2.4)

The ETHERNET function block is available when the Ethernet Communication Network option board is installed in the controller and the controller includes firmware version V2.4 or higher.

ETHERNET

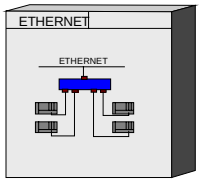

IP ADRES	**IP ADdRESs** (S) .. 1-nnn,2-nnn,3-nnn,4-nnn (192.168.0.2)	
IP MASK	**IP MASK** (S) 1-nnn,2-nnn,3-nnn,4-nnn (255.255.255.0)	
IP GATE	**IP GATEway** (S) .. 1-nnn,2-nnn,3-nnn,4-nnn (192.168.0.1)	
ETH DPLX	**ETHernet DuPLeX** (S) . **A**uto, **HALF**, **FULL**	(A)
ETH RATE	**ETHernet RATE** (S) ..... **A**uto, 10, 100	(A)
P2P RATE	**P**eer **2 P**eer **RATE** (S) .25, .5, 2, 5, 10 sec	(.5)

(Rev 2)

Use this function block to configure Ethernet communication parameters. The default IP addresses shown are used for factory testing in a network environment and should be changed to meet individual system requirements. Consult your company's network administrator for assistance in determining IP addresses. Also, consider any network security issues that can arise when networking plant areas.

4.2 I/O AND LOOP FUNCTION BLOCKS

This section provides a detailed description of each input/output and loop function block. Blocks are listed alphabetically.

4.2.1 A/M - A/M Transfer

One **A/M** function block can be used per loop and it is normally used on the output of controller blocks to enable auto/manual operation of the loop. It is separate from the controller block allowing the option of inserting other function blocks (e.g. override, feedforward) between the controller and the A/M Transfer. If function block PB3SW has been used the A/M block is not available.

A/M TRANSFER

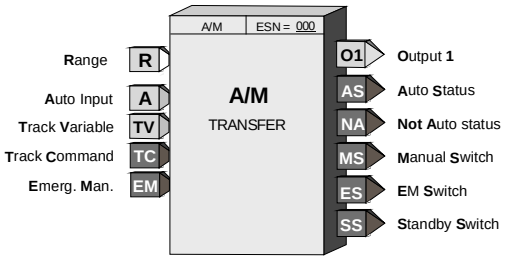

RGPTR	RanGe PoinTeR (S) ..... loop tag.block tag	(null)
PUMAN	Power Up MANual (S) ..... Real	(0.0)
AONLY	Auto ONLY (S) ..... NO/YES	(NO)
POWERUP	POWER UP position (S) ..... A/M	(A)
PULASTT	Power Up LAST (S) ..... NO/YES	(YES)
CWMANN	ClockWise MANUAL (S) ..... NO/YES	(YES)
MANACCL	MANual ACCeLeration (S) ..Slow, Med, Fast	(S) *
EMPRIOR	Emerg Manual PRIORity (S) . 0,1,2,3,4,5	(4)
EMMANN	Emerg Man switches to MAN .. NO/YES	(NO) *
LOCKMAN	LOCK MAN in Emerg Man ..... NO/YES	(NO) *
SBPRIOR	StandBy PRIORity (S) 0,1,2,3,4,5	(4)
INPUTA	INPUT A (H) ..... *loop tag.block tag.output*	*(null)*
INPUTTV	INPUT TV (H) ..... *loop tag.block tag.output*	*(null)*
INPUTTC	INPUT TC (H) ..... *loop tag.block tag.output*	*(null)*
INPUTEM	INPUT EM (H) ..... *loop tag.block tag.output*	*(null)*
ESN	Exec. Seq. No. (H) ..... 001 to 250	

* Available with Firmware version 1.30 or later

AUTO allows the signal from the controller (input A) to become the output of the A/M Transfer unless EMER MAN or STANDBY is active. Auto ONLY forces the operator pushbutton to be locked in the **A**UTO position, but EMEG MAN and STANDBY will function normally.

MANual allows the operator to adjust the manual value unless STANDBY is active. The manual value tracks the block output when in AUTO or STANDBY. The manual value can be adjusted when in MAN, provided the displayed variable is the process or the valve (e.g. TC2053.P or TC2053.V). When a loop is switched to MANual the display will automatically show the valve (e.g. TC2053.V). The range pointer (input Range) lets the A/M function block know the range of the auto input signal and enables the A/M block to properly process pulser changes from the operator faceplate. The range pointer also defines the range of the manual function as -10% to 110%. This can be useful to prevent inadvertent changes from an operator workstation that might set the manual value well beyond the local operator's changeable range. In most cases, the Range input (range pointer) will connect to the controller function block. An unconfigured range pointer will default the range to 0.00 - 100.00.

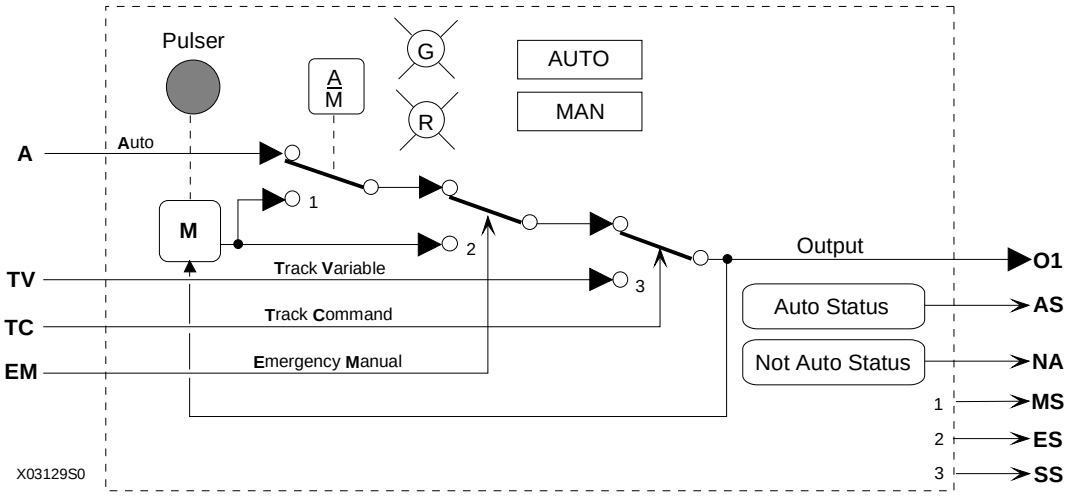

BLOCK DIAGRAM

EMERgency **MAN**ual will be asserted when input EM is high (1). This causes the output to hold at the last position and permits the operator to adjust the manual value under the conditions listed for MANual. It will also assert an EMER MAN status, at the configured priority, to the operator display.

STANDBY will be asserted when input TC is high (1). This causes the A/M block output to track input TV thus placing the loop in a standby condition. This feature can be used to enable one loop to track another for either redundancy applications or optional control schemes. It will also assert a STANDBY status, at the configured priority, to the operator display.

STATUS OUTPUTS - Output **AS** (Auto Status) goes high (1) when output O1 is the Auto input. Output NA will go high when output 01 is not the Auto input. Output MS goes high when the A/M switch is in the manual position. Output ES goes high when the Emergency Manual switch is in the manual position. SS goes high when the standby switch is in the Track Variable position. Two LEDs on the display identify the position of the A/M switch.

POWER UP - The A/M function block can be configured to power up under various conditions during a warm or cold start. If PU LAST has been configured as YES, during a warm start all outputs are initialized at previous values and the block will power up in the same condition (i.e. same A/M switch position). When powering up in auto, the A/M block will execute in the manual mode for the first two scan cycles, allowing a controller block to track the last value. When PU LAST is set to NO, the A/M block does not power up in last position during a warm start and will power up as configured by the POWER UP parameter, either AUTO or MAN. During a cold start, the A/M block will always power up as configured by the POWER UP parameter. When the POWER UP parameter is used and the block powers up in MAN, the manual value can be set using the PU MAN parameter.

Clock **W**ise **MAN**ual configured as YES, the default position, will cause the manual value to increase with clockwise rotation of the knob. This feature is useful when clockwise rotation is desired to always open a value whether the valve is direct or reverse acting.

Parameter **EM MAN**, in firmware 1.30 and higher, allows the position of the A/M block manual switch (switch 1 in the block diagram) and the associated red and green LEDs to be configured. When the EM input goes high (1), the emergency Manual Switch (switch 2 in the block diagram) switches to manual. If EM MAN is configured as YES, the Manual Switch and the LEDs will also switch to manual. The Manual Switch and indicator light will remain in manual until the operator presses the A/M button or a command is received from an HMI to switch to Auto. The EM Switch will remain in manual until the EM status clears regardless of the position of the Manual Switch. If the EM MAN parameter is configured as NO, the Manual Switch and associated LEDs will not change when the EM input goes high (1).

LOCK MAN, in V2.4, can be set to YES to lock the loop in manual when Emergency Manual has been activated. The operator can switch the loop to Auto only when the EM condition has cleared. This feature is available only when the EM MAN parameter is configured as YES.

The MAN ACCL parameter, in firmware 1.30 and higher, enables setting the acceleration rate applied to the pulser knob. The rate can be configured for Slow, Medium, or Fast. Slow is the default and is consistent with firmware versions less than 1.30.

PRIORITIES - The priority assigned to EM or SB PRIOR will affect the operation as follows (the outputs ES and SS will go high with all priority assignments, including 0, when event is active):

1. Bargraphs, event LEDs, and condition will flash. ACK button must be used to stop flashing.
2. Bargraphs, event LEDs, and condition will flash. Flashing will stop if ACK or if event clears.
3. Event LEDs and condition will flash. ACK button must be used to stop flashing.
4. Event LEDs and condition will flash. Flashing will stop if ACK or event clears.
5. Event LEDs and condition will turn on when event is active and off when the event clears.
0. No local display action occurs when event is active.

4.2.2 ACS - ARCCOSINE

ACS_ function blocks, in firmware 1.30 and higher, accept an input between -1.0 and 1.0. Each provides an output signal in radians of which the input is the cosine.

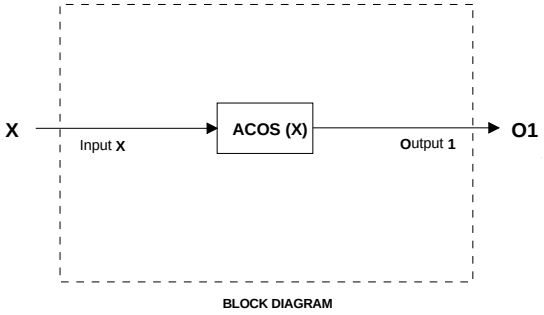

BLOCK DIAGRAM

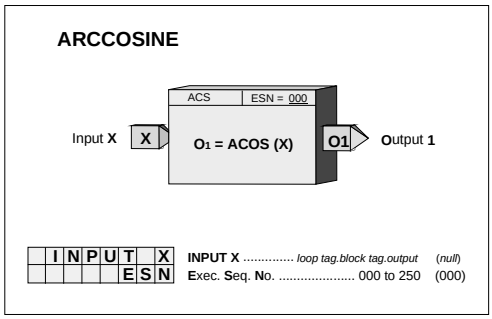

4.2.3 ADD_ - Addition

ADD_ function blocks perform arithmetic addition on three input signals. Any unused input will be set to 0.0 and will have no affect on the output.

All inputs should have the same engineering units. If units are not consistent, an SCL (Scaler) function block can be used or an alternative is to use a MATH function block that has built-in scaling functions.

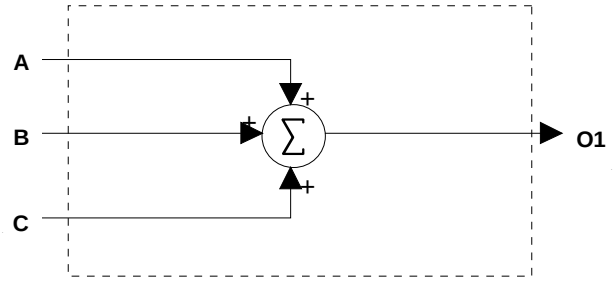

BLOCK DIAGRAM

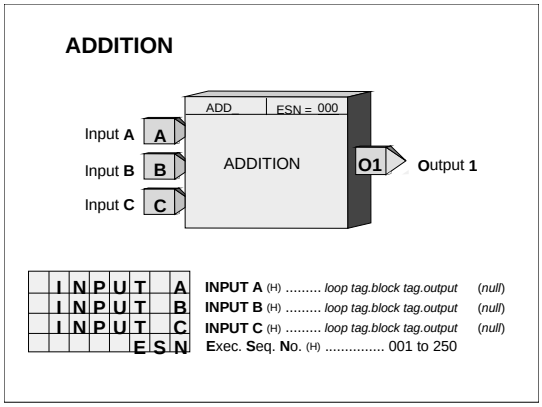

4.2.4 AG3 - AGA 3 Orifice Metering of Natural Gas

AG3 function blocks, which can be used on a one per loop basis, are available in firmware 1.30 and higher, This block uses the AGA 3 (American Gas Association Report #3) calculation to accurately measure the flow of natural gas using an orifice meter with flanged taps. The basic equations calculated by this block, in accordance with AGA Report No. 3, Orifice Metering of Natural Gas, Part 3, August 1992 (AGA Catalog No. XQ9210), are:

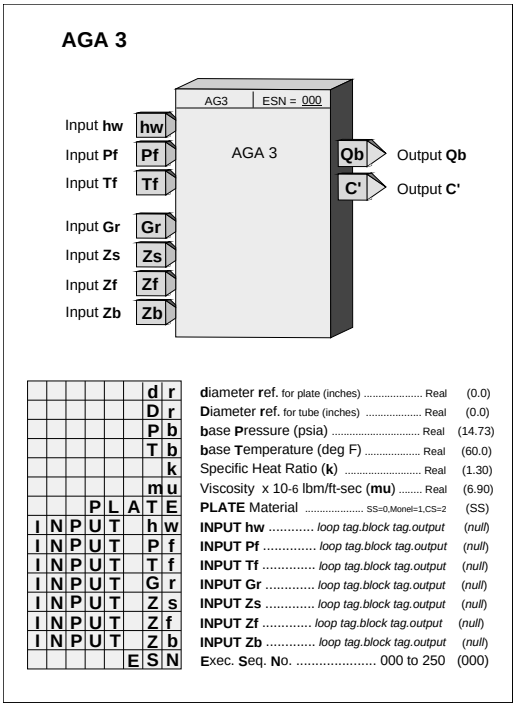

$$Q_b = C' \sqrt{P_{f1} h_w}$$

$$C' = F_n(F_c+F_{sl})Y_1 F_{pb} F_{tb} F_{tf} F_{gr} F_{pv}$$

where: Q_b = volume flow rate at base conditions
C' = composite orifice flow factor
P_{f1} = absolute flowing pressure (upstream tap)
h_w = orifice differential pressure
F_n = numeric conversion factor
F_c = orifice calculation factor
F_{sl} = orifice slope factor
Y_1 = expansion factor (upstream tap)
F_{pb} = base pressure factor
F_{tb} = base temperature factor
F_{tf} = flowing temperature factor
F_{gr} = real gas relative density factor
F_{pv} = supercompressibility factor

Output Q_b is updated every scan cycle. Output C' is updated continuously for temperature effects and periodically for other effects. The following conditions are considered in the calculations:

- Standard Conditions are: P_s = 14.73 psia, T_s = 60°F, Z_{sair} = 0.999590.
- Nominal pipe size is 2" or larger, Beta is 0.1 - 0.75, and Re (Reynolds Number) is 4000 or larger.
- Y (expansion factor) and absolute flowing pressure P_f are referenced to upstream tap (i.e. Y_1 & P_{f1}).
- h_w is in inches H_20 and P_f is in psia. $0 < [h_w/(27.707*P_f)] <= 0.2$.

The following parameters are configuration entries:

d_r = orifice plate bore diameter in inches at a reference temperature of 68°F
D_r = meter tube internal diameter in inches at a reference temperature of 68°F
P_b = base pressure (psia)
T_b = base temperature (°F)

The following are analog inputs to the AGA 3 function block:

h_w = orifice differential pressure (in H_2O)
P_f = flowing pressure at upstream tap - P_{f1} (psia)
T_f = flowing temperature (°F)
G_r = real gas relative density (specific gravity)
Z_s = compressibility at standard conditions

Z_f = compressibility at flowing conditions at upstream tap - Z_{f1}
Z_b = compressibility at base conditions

The specific gravity factor (G_r) and the compressibility factors (Z_s, Z_f, Z_b) can be entered manually using HLD (Hold) function blocks, computed, and then downloaded from a host device, or calculated in the controller using the AG8 (AGA 8 Compressibility Factors of Natural Gas) function block.

The following are analog outputs of the AGA 3 function block:

Q_b = volume flow rate at base conditions (SCFH - Standard Cubic Feet per Hour)
C' = composite orifice flow factor [SCFH/√ (psia)(in H2O)]

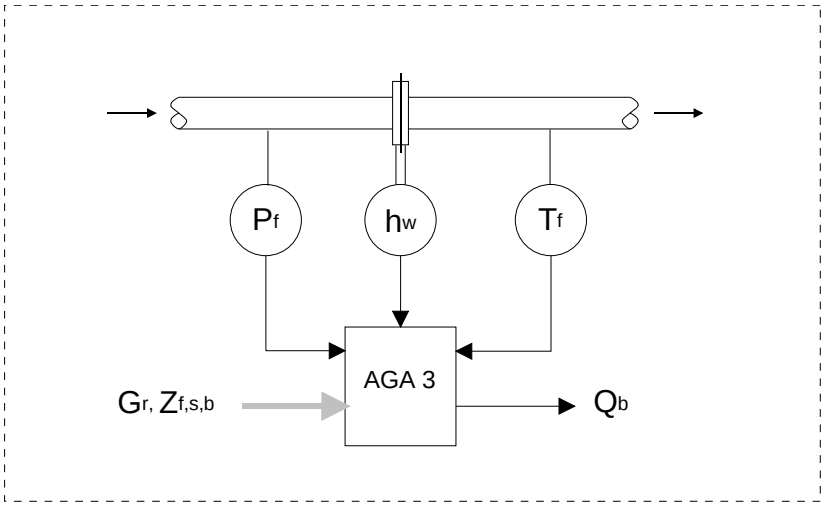

Application Diagram

4.2.5 AG7 - AGA 7 Measurement of Gas by Turbine Meters

AG7 function blocks, which can be used on a one per loop basis, are available in firmware 1.30 and higher, This block uses the AGA 7 (American Gas Association Report #7) calculation to accurately measure the volume flow of gas at base conditions using a turbine meter. The basic equations calculated by this block in accordance with AGA Turbine Meter Report No. 7, 1985 (AGA Catalog No. XQ0585) are:

$Q_b = Q_f (T_b/T_f)(P_f/P_b)(Z_b/Z_f)$

where: Q_f = volume flow at standard conditions
Q_b = volume flow rate at base conditions
P_f = flowing pressure (psia)
T_f = flowing temperature)
Z_f = compressibility at flowing conditions
P_b = base pressure (psia)
T_b = base temperature (°F)
Z_b = compressibility at base conditions

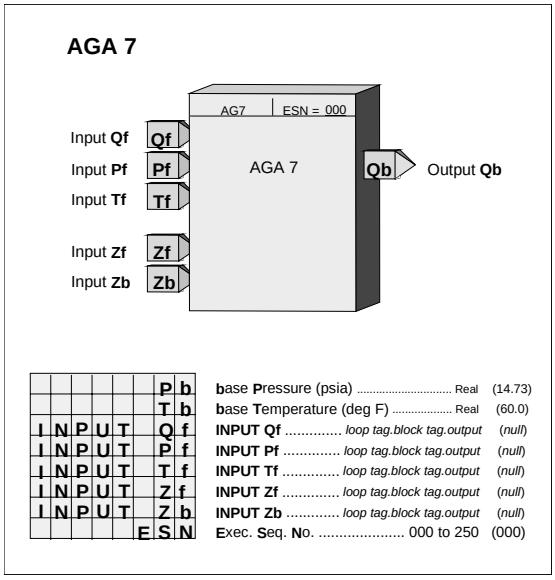

Block output Q_b is updated continuously and is the volume flow rate at base conditions in the same units as input Q_f. T_b and T_f are converted within the block from °F to °R (adds 459.67 to the °F input value) for the actual calculation. Compressibility factors (Z_f, Z_b) can be entered manually using HLD (Hold) function blocks, computed and downloaded from a host device, or calculated in the controller using the AG8 (AGA 8 Compressibility Factors of Natural Gas) function block.

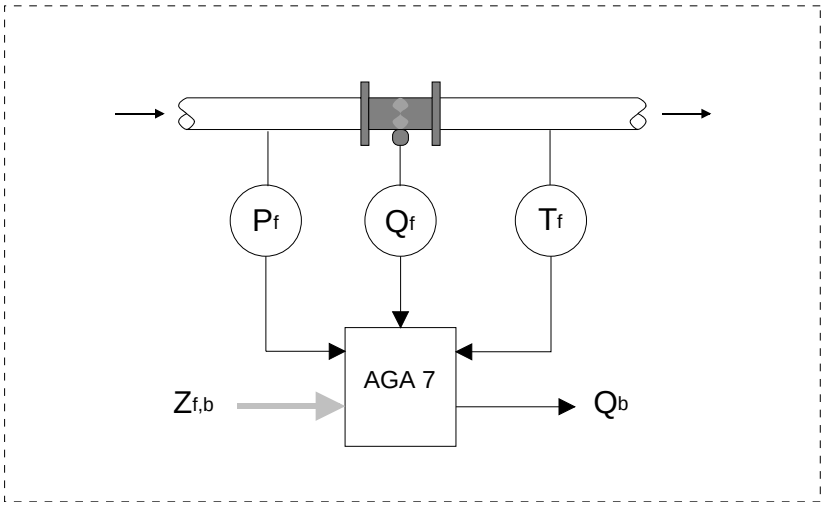

Application Diagram

4.2.6 AG8 - AGA 8 Compressibility Factors of Natural Gas

AG8 function blocks, which can be used on a one per loop basis, are available in firmware 1.30 and higher. This block calculates the compressibility factors of natural gas in accordance with AGA 8 Report No. 8, July 1994 (AGA Catalog No. XQ9212). It computes various compressibility factors and the specific gravity (relative density) using the detailed characterization method described in the report. The mole percentage of the gas components and the base temperature and pressure are entered in the configuration and the flowing temperature and pressure are provided as block inputs. Parameter MOL% SUM provides a read only value that is the total of all the gas compounds that have been entered. The AGA8 computation is time consuming and is calculated over a total of 100 scan cycles so as not to have any significant effect on the controller cycle time.

Z_S (compressibility at standard conditions) is calculated after a power-up or after a configuration change is made. Z_b and Z_f are calculated on a periodic basis with the actual update time dependent on the number of gas components and the scan cycle of the controller.

AGA 8

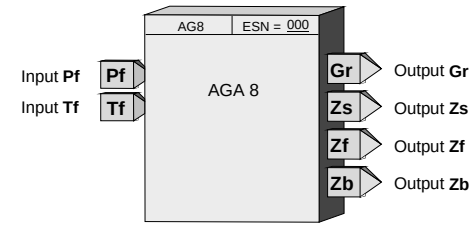

	base **P**ressure (psia)	Real (14.73)
	base **T**emperature (deg F)	Real (60.0)
METHANE	**METHANE** % composition	*Real* (96.5222)
NITROGEN	**NITROGEN** % composition	*Real* (.2595)
CARBON DIOXIDE	**C**arbon **DIOXiDe** % composition	*Real* (.5956)
ETHANE	**ETHANE** % composition	*Real* (1.8186)
PROPANE	**PROPANE** % composition	*Real* (.4596)
WATER	**WATER** % composition	*Real* (0.0)
HYDROGEN SULFIDE	**HY**drogen **SULFiDe** % composition	*Real* (0.0)
HYDROGEN	**HYDROGEN** % composition	*Real* (0.0)
CARBON MONOXIDE	**C**arbon **MONOXiDe** % composition	*Real* (0.0)
OXYGEN	**OXYGEN** % composition	*Real* (0.0)
i-BUTANE	**i-BUTANE** % composition	*Real* (.0977)
n-BUTANE	**n-BUTANE** % composition	*Real* (.1007)
i-PENTANE	**i-PeNTANE** % composition	*Real* (.0473)
n-PENTANE	**n-PeNTANE** % composition	*Real* (.0324)
n-HEXANE	**n-HEXANE** % composition	*Real* (.0664)
n-HEPTANE	**n-HePTANE** % composition	*Real* (0.0)
n-OCTANE	**n-OCTANE** % composition	*Real* (0.0)
n-NONANE	**n-NONANE** % composition	*Real* (0.0)
n-DECANE	**n-DECANE** % composition	*Real* (0.0)
HELIUM	**HELIUM** % composition	*Real* (0.0)
ARGON	**ARGON** % composition	*Real* (0.0)
MOL% SUM	**MOL% SUM** (read total % composition)	*Real* (100.0)
INPUT Pf	**INPUT Pf**	*loop tag.block tag.output* (*null*)
INPUT Tf	**INPUT Tf**	*loop tag.block tag.output* (*null*)
ESN	Exec. **S**eq. **N**o.	000 to 250 (000)

4.2.7 AIE_ - Analog Input - Ethernet (V3.0)

AIE_ function blocks are available when the optional Ethernet communication board[5] is installed in the controller. It enables the controller to read analog data from other stations over the Ethernet network.

Up to 32 AIE_ blocks are available. Blocks are assigned in sequence (e.g. AIE01, AIE02...), controller wide, with each use.

Data can be received as a real floating-point number and is passed to the block output O1 directly or it can be obtained as a 16-bit integer. A Floating Point number can be formatted in one of four methods as shown in Table 4-4 on the next page. An integer is converted to floating point as scaled by the MIN INT & MAX INT and the MINSCALE & MAXSCALE parameters. Both Unsigned Integer (Uint) & Signed Integer (Sint) options are available. See Table 4-5 on the next page.

ANALOG INPUT - ETHERNET

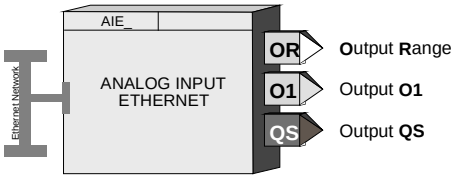

IP ADRES	**IP AD**d**RES**s (H) ..... nnn.nnn.nnn.nnn *(192.168.0.0)*
MB ADRES	**MB AD**d**RES**s (H) ..... 1 - 255 *(1)*
MBREG	Mod**B**us **REG**ister (H) ..... 00000 - 65535 *(00000)*
REG TYP	Modbus **REG**ister **TYP**E (H) . **InPut/Hold**ing *(InPut)*
DATA TYP	Modbus **DATA TYP**e (H) ..... **FP/Uint/Sint** *(FP)*
BYTE ORD	**BYTE ORD**er (S) ..... 1/2/3/4 *(1)*
UD RATE	**U**pdate **RATE** (H) ..... P2P/Ct *(P2P)*
MIN INT	**MIN**imum **INT**eger (S) ..... (see table 2) *(*)*
MAX INT	**MAX**imum **INT**eger (S) ..... (see table 2) *(*)*
RANGE	**RANGE** (S) ..... **M**an/**A**uto *(M)*
MINSCALE	**MIN**imum **SCALE** (S) ..... Real *(0.0)*
MAXSCALE	**MAX**imum **SCALE** (S) ..... Real *(100.0)*
DPP	**D***ecimal* **P***t.* **P***osition (preferred) (S) 0.0.0.0.0.0 0.00*
ENGUNITS	**ENG**ineering **UNITS** (S) ..... 6 ASCII Char *(PRCT)*

When a DATA TYP is selected, range limits (see Table 4-5) are automatically entered. This ensures that the user-entered integer values fall within the correct range. MIN INT and MAX INT values must be entered whenever a DATA TYP is changed.

Output OR contains the range scaling for the floating point block output O1. The OR output is a special data type that includes the MINSCALE, MAXSCALE, DPP, and the ENGUNITS and can be connected to other blocks having a Range (RG PTR) input. Range scaling information can be automatically obtained from the source of the data over Ethernet if the device has the scaling information packaged with the data. This is a feature provided by AOE function blocks from other Siemens 353 controllers. AIE blocks connected to AOE blocks are defined by using the Modbus Registers from Table 4-6 below. If the automatic range scaling feature is not available, the default setting of the RANGE parameter "MAN" should be used. In this case, range parameters are entered manually. When the auto range feature is used, the range in the AIE block may be out of sync for several seconds if on line changes are made to the AOE range.

The IP ADRES parameter is used to configure the IP address of the source device. The MB ADRES parameter allows a Modbus address to be configured. When connecting to other Siemens controllers the Modbus address is set to 1. In some cases, other devices may use a different address or when going through a Modbus TCP/IP gateway a Modbus network may have multiple devices, each having a unique address. The REG TYP parameter allows setting the source register as a Holding Register or an Input Register. For many Modbus devices, this setting does not matter since the device will treat them as identical registers. The DATA TYP parameter will enable the AIE block to acquire either floating point or integer data. When floating point is selected the controller will request two consecutive registers starting with the MB REG parameter. The UD RATE parameter configures the rate at which the block will request data. The P2P setting will update the data at the rate set by the P2P RATE parameter in the ETHERNET block. The Ct setting will update the data at the cycle time of the controller. The Ct parameter should normally be used only when the analog input is the process variable in a PID control loop

Output QS indicates the quality of the received data and will go high (1) when the data is bad. This is normally associated with failure to receive data due to a communication failure or a misconfiguration of the source.

[5] *Requires Ethernet communications board firmware version 2.0 or later; set BYTE ORDer to 4.*

TABLE 4-4 Floating Point Number Formats

BYTE ORD	Type Description	Byte Order	Comments
1	Big Endian FP Format	4, 3,2, 1	IEEE Standard Usage
2	Big Endian FP w/ bytes swapped	3, 4, 1, 2	
3	Little Endian FP Format	1, 2, 3, 4	
4	Little Endian FP w/ bytes swapped	2, 1, 4, 3	Model 353R Usage

TABLE 4-5 Integer Default Values

Selection	Parameter	Default Value
Uint	MIN INT	0
Uint	MAX INT	65535
Sint	MIN INT	-32768
Sint	MAX INT	+32767

TABLE 4-6 FB Numbers vs. Modbus Registers

FB Number	MB Register	FB Number	MB Register	FB Number	MB Register	FB Number	MB Register
AOE01	30961	AOE09	30977	AOE17	30993	AOE25	31009
AOE02	30963	AOE10	30979	AOE18	30995	AOE26	31011
AOE03	30965	AOE11	30981	AOE19	30997	AOE27	31013
AOE04	30967	AOE12	30983	AOE20	30999	AOE28	31015
AOE05	30969	AOE13	30985	AOE21	31001	AOE29	31017
AOE06	30971	AOE14	30987	AOE22	31003	AOE30	31019
AOE07	30973	AOE15	30989	AOE23	31005	AOE31	31021
AOE08	30975	AOE16	30991	AOE24	31007	AOE32	31023

Note: Registers listed in Table 4-6 are Extended Modbus Registers, not supported by all Modbus devices.

4.2.8 AIL_ - Analog Input - LIL

AIL_ function blocks are available when the optional LIL communication board is installed. They allow the controller to obtain global data from other stations on the LIL. AIL block numbers are assigned in sequence with each use, station wide. The data is received in the LIL format having a standard range of $80 to $F80. The block output is a real number and is scaled in engineering units using the MIN and MAX SCALE parameters. The Output Range is a special data type that includes the MIN and MAX SCALE, the DPP, and the ENGUNITS that can be connected to other blocks having a Range (RG PTR) input.

Output QS indicates the quality of the received data and will go high (1) when the data is bad. This is normally associated with failure to receive global data due to a LIL failure or a misconfiguration of the source.

ANALOG INPUT - LIL

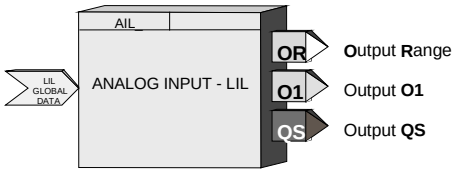

SRCE ADD	SouRCE ADDress (H) ..... 00 to 64	*(null)*
SRCE CHN	SouRCE CHaNnel (H) ..... 000 to 255	*(null)*
LIL CHAN	LIL CHANnel (S) ..... *008 to 255*	*(null)*
MINSCALE	MINimum SCALE (H) ..... Real	*(0.0)*
MAXSCALE	MAXimum SCALE (H) ..... Real	*(100.0)*
DPP	Decimal Pt. Position *(preferred) (S) .. 0.0.0.0.0.0*	*0.00*
ENGUNITS	ENGineering UNITS (S) .. 6 ASCII Char	*(PRCT)*

The AIL function can be assigned to a single LIL channel. It will then have certain data that will be accessible over the LIL. Parameter 1 is the received data (RD) in the $80-$F80 format and will be re-transmitted by this station on the assigned channel. This LIL CHAN parameter can also be set to 0. The controller will still receive global data from the other station but the received data will not be re-transmitted and the other channel data (i.e. MINSCALE, ...) will not be accessible.

	1	2	3	4	5	6	7	8	9	10`	11	12
n	RD	SA/SC	MINSCALE		MAXSCALE		ENG UNITS			Output O1		

4.2.9 AIN_ - Analog Inputs

AIN_ function blocks convert a voltage input, having a range defined during calibration, into a block output signal that is scaled in engineering units. The output is then interconnected to other function blocks within the controller.

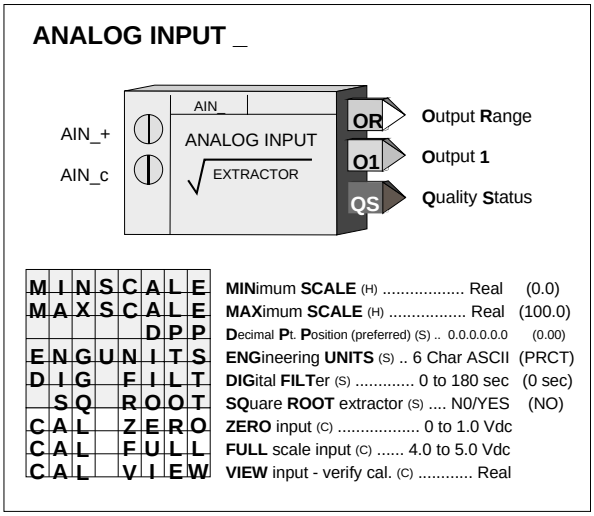

A 6-character ASCII value can be entered to identify the engineering units of the output signal. The scaled output range is configurable and has a factory default of 0.0 to 100.0 PRCT. Ranges such as 300.0 to 500.0, representing engineering units in degrees C, can also be configured. The Output Range is a special data type that includes the MIN and MAX SCALE, the DPP, and the ENGUNITS that can be connected to other blocks with a Range (RG PTR) input.

Analog Input blocks are available on the MPU Controller Board (CB) and on the I/O Expander Board (EB). Power for 2-wire transmitters is available at the controller field terminals. Control Module terminal assignments are found in Section 9.1 Model 353RCM_ _ _ _B_.

A digital filter (time constant) is available to dampen process noise. A square root extractor is also available to linearize a flow signal from a ΔP transmitter, allowing the block output to be configured for flow units. Output QS indicates the quality of the analog output signal O1, and will be high (1) when output O1 is bad, and low (0) when good. Bad quality signifies an A/D conversion failure or a 1-5Vdc input signal that falls below 0.6 Vdc indicating an open circuit or failure of a 2-wire transmitter.

A verify mode is available during calibration to view the analog input, in volts, over the full calibrated range. The input is factory calibrated for 1-5 Vdc and should not require field calibration. However, field calibration can be performed if another range is required or to match the exact transmitter calibration. Current inputs are accommodated using precision dropping resistors connected across the input terminals (250Ω resistors are supplied with the controller for conversion of 4-20mA inputs).

Power Up - During a hot, a warm or a cold start, the function block will temporarily by-pass the digital filter to enable the output to initialize at the actual hardware input signal.

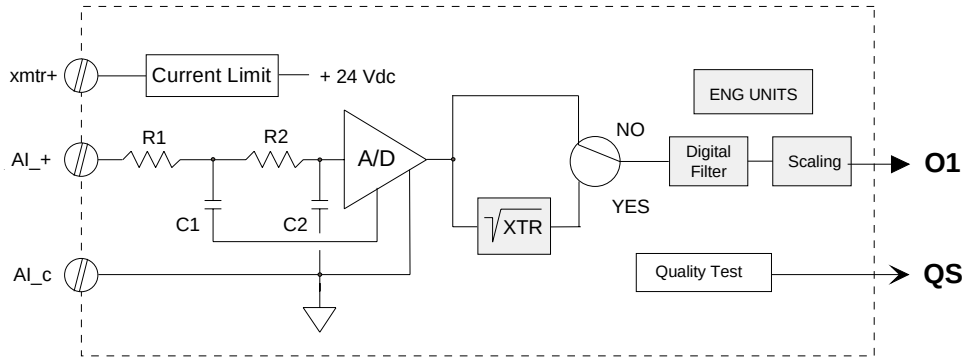

BLOCK DIAGRAM

4.2.10 AINU_ - Analog Inputs, Universal

AINU_ function blocks are available on the optional I/O Expander Board. These function blocks convert sensor inputs such as T/C (thermocouple), RTD (resistance temperature detector), millivolt, ohm, and slidewire sources into block outputs. Current inputs (i.e. 4-20 mA) are accommodated by using the WMV type and connecting a 3.75Ω resistor across the input. An output bias can be used to nullify any known offset in the sensor circuit and a digital filter (time constant) is included, to dampen process noise. Output QS indicates the quality status of the output signal O1 and will go high (1) when the output is of bad quality. Bad quality indicates an A/D conversion failure or an open circuit T/C.

ANALOG INPUT- UNIVERSAL_

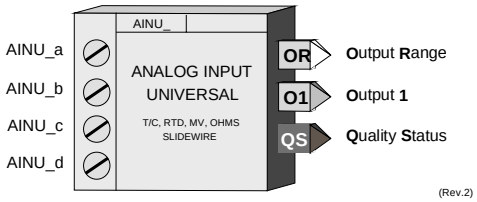

SEN TYPE	**SEN**sor **TYPE** (H) ..*Cal. Input Values Table* (15)
SEN MIN	**SEN**sor **MIN**imum (H) . ..*Sen Min/Max Table* (15)
SEN MAX	**SEN**sor **MAX**imum (H) ...*Sen Min/Max Table* (75)
DIG FILT	**DIG**ital **FILT**er (S) ..... 0 to 180 sec (0 sec)
OUT BIAS	**OUT**put **BIAS** (S) ..... Real (0.0)
MIN SCALE	**MIN**imum **SCALE** (H) ...*Sen Min/Max Table* (-185)
MAX SCALE	**MAX**imum **SCALE** (H) ..*Sen Min/Max Table* (1100)
DP P	**D**ecimal **P**t. **P**osition (preferred) (S) 0.0.0.0.0.0 0.00
ENG UNITS	**ENG**ineering **UNITS** (H) ....*Input Types Table* (1)
CAL TYPE	**CAL TYPE** (C) . (*Sen Min/Max Table* _ **FLD/FAC**) (FAC)
CAL ZERO	**ZERO** field calibration (C) . *Cal. Input Values Table*
CAL FULL	**FULL** scale field cal (C) .....*Cal. Input Values Table*
CAL VIEW	**VIEW** input - verify cal (C) ..... Real

The scaling function is used to establish an output range, in engineering units, for the selected sensor range (e.g. 0-10 mv or 50.0-150.0 amperes). **D**irect **T**emperature **M**easurements (i.e. T/C and RTD) bypass sensor and range scaling and the block output units are selected from Table 4-7. When selected, the proper read only ASCII characters corresponding to the type units selected will automatically be placed in the ENG UNITS parameter. When OHMs or MVs are selected, the ENG UNITS parameter can be configured to correspond to the process engineering units. The default SEN MIN & MIN SCALE are set to the minimum operating value and the SEN MAX & MAX SCALE are set to the maximum operating value. SEN MIN & SEN MAX always indicate the sensor range limits in degrees C. However, it is important to enter the actual intended operating range in the MINSCALE, MAXSCALE, and DPP parameters so that other function blocks, such as the controller, operator faceplate, and workstation interface, can point to this block for range and display informationBlock names (IDs). Input terminations (terminal numbers) are listed in SDiCM-1.

All input types are factory calibrated and do not require field calibration. However, for those cases where outputs must be adjusted to meet a local standard, a field calibration feature is available to override the factory calibration for the input type selected. The factory calibration is retained so that the input can be returned to the factory calibration at any time by storing 'FAC' in the calibration selection. Table 4-8 provides the input values that are used to perform a field calibration. A verify mode is available during calibration to view the sensor input over the full range. The signal that is viewed, in the calibration verify mode, is in the basic units of measure (e.g. °C for temperature, mv for millivolts) and is not affected by the temperature units conversion, digital filter, scaling, or the output bias adjustment. The full block output with these parameters applied can be viewed in the VIEW mode within loop configuration. During a hot, warm or cold start, the function block will temporarily by-pass the digital filter to enable the output to initialize at the actual hardware input signal. Note that the field calibration is erased when the SENsor TYPE is changed.

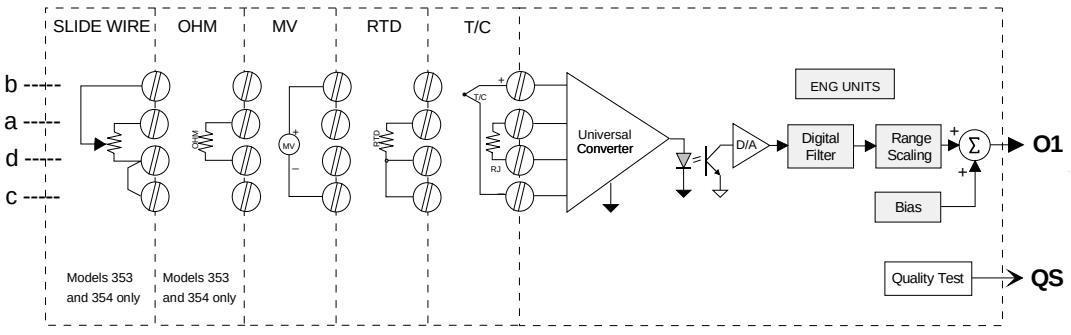

BLOCK DIAGRAM

TABLE 4-7 Analog Input Types

#	ENGINEERING UNITS	AVAILABLE ON INPUT TYPES
1	Deg C (degrees Celsius)	JT/C, KT/C, TT/C, ET/C, ST/C, RT/C, BT/C, NT/C, DRTD, URTD, JRTD
2	Deg F (degrees Fahrenheit)	JT/C, KT/C, TT/C, ET/C, ST/C, RT/C, BT/C, NT/C, DRTD, URTD, JRTD
3	Deg R (degrees Rankine)	JT/C, KT/C, TT/C, ET/C, ST/C, RT/C, BT/C, NT/C, DRTD, URTD, JRTD
4	K (Kelvin)	JT/C, KT/C, TT/C, ET/C, ST/C, RT/C, BT/C, NT/C, DRTD, URTD, JRTD
*****	6 Char ASCII	OHM, SLW, NMV, WMV

TABLE 4-8 Analog Input Calibration Values

#	TYPE	DESCRIPTION	OPERATING RANGE	FIELD CAL 'FLD' POINTS
1	JT/C	Type J Thermocouple	-185°C to 1100°C (-300°F to 2010°F)	0°C & 800°C
2	KT/C	Type K Thermocouple	-185°C to 1370°C (-300°F to 2500°F)	0°C & 1000°C
3	TT/C	Type T Thermocouple	-200°C to 370°C (-400°F to 698°F)	-100°C & 300°C
4	ET/C	Type E Thermocouple	-185°C to 1000°C (-300°F to 1830°F)	0°C & 800°C
5	ST/C	Type S Thermocouple	-18°C to 1650°C (0°F to 3000°F)	400°C & 1400°C
6	RT/C	Type R Thermocouple	-18°C to1610°C (0°F to 2930°F)	400°C & 1400°C
7	BT/C	Type B Thermocouple	-18°C to 1815°C (0°F to 3300°F)	800°C & 1600°C
8	NT/C	Type N Thermocouple	-185°C to 1300°C (-300°F to 2370°F)	0°C & 1000°C
9	DRTD	DIN 43760/IEC 751 RTD alpha 0.003850	-185°C to 622°C (-300°F to 1152°F)	100Ω (0°C) & 285Ω (512.380°C)
10	URTD	US (NBS 126) RTD alpha 0.003902	-185°C to 613°C (-300°F to 1135°F)	100Ω (0°C) & 285Ω (504.84°C)
11	JRTD	JIS C-1604 RTD alpha 0.003916	-185°C to 610°C (-300°F to 1130°F)	100Ω (0°C) & 285Ω (502.94°C)
12	OHM	Resistance	0 ohms to 5000 ohms	0 ohms & 5000 ohms
13	SLW	Slidewire	500 ohms to 5000 ohms	*Field cal not available*
14	NMV	Narrow Millivolt	- 19.0 mv to 19.0 mv	0 mv & +15 mv
15	WMV	Wide Millivolt	-30.0 mv to 77 mv	0 mv & +75 mv

TABLE 4-9 Analog Input SEN MIN/MAX & MIN/MAX SCALE Parameters

SEN TYPE (Note 1)	SEN MIN	SEN MAX	MIN SCALE	MAX SCALE
1-12, 14, 15	[min. operating value]	[max. operating value]	[min. operating value]	[max. operating value]
13	0 (%)	100 (%)	0.0 PRCT	100.0 PRCT (Note 2)

Notes:

(1) When changing SEN TYPE, type number should blink after pressing STORE. Use STEP UP and then STEP DOWN to verify that sensor type has changed.

(2) Range scaling of the AINU output when the Slidewire sensor type is selected can be accomplished using a SCL_ Scalar function block connected to the output (O1) of the AINU function block.

4.2.11 ALARM - Alarm

ALARM function blocks can be used on a one per loop basis and contain four (4) alarms associated with Input P (normally the process input to the controller function block). Each alarm can be configured as NONE, HI, LO, HDEV, LDEV, DEV, and OR.

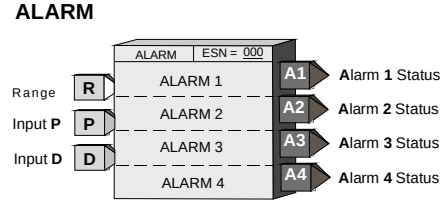

		R	G			P	T	R	RanGe PoinTeR (S) ..... loop tag.block tag	(null)
A	1		L	I	M	I	T		Alarm 1 LIMIT (S) ..... Real	(110.0)
A	2		L	I	M	I	T		Alarm 2 LIMIT (S) ..... Real	(-10.0)
A	3		L	I	M	I	T		Alarm 3 LIMIT (S) ..... Real	(100.0)
A	4		L	I	M	I	T		Alarm 4 LIMIT (S) ..... Real	(0.0)
A	1		D	B	A	N	D		Alarm 1 DeadBAND (S) 0.1/0.5/1.0/5.0%	(0.5)
A	2		D	B	A	N	D		Alarm 2 DeadBAND (S) 0.1/0.5/1.0/5.0%	(0.5)
A	3		D	B	A	N	D		Alarm 3 DeadBAND (S) 0.1/0.5/1.0/5.0%	(0.5)
A	4		D	B	A	N	D		Alarm 4 DeadBAND (S) 0.1/0.5/1.0/5.0%	(0.5)
A	1		P	U		E	N		Alarm 1 Power Up ENabled (S) ..... NO/YES	(YES)
A	2		P	U		E	N		Alarm 2 Power Up ENabled (S) ..... NO/YES	(YES)
A	3		P	U		E	N		Alarm 3 Power Up ENabled (S) ..... NO/YES	(YES)
A	4		P	U		E	N		Alarm 4 Power Up ENabled (S) ..... NO/YES	(YES)
A	1		P	R	I	O	R		Alarm 1 PRIORity (S) 1/2/3/4/5	(3)
A	2		P	R	I	O	R		Alarm 2 PRIORity (S) 1/2/3/4/5	(3)
A	3		P	R	I	O	R		Alarm 3 PRIORity (S) 1/2/3/4/5	(3)
A	4		P	R	I	O	R		Alarm 4 PRIORity (S) 1/2/3/4/5	(3)
A	1			T	Y	P	E		A1 TYPE (S) ..... none,HI,LO,HdEV,LdEV,dEV,or	(HI)
A	2			T	Y	P	E		A2 TYPE (S) ..... none,HI,LO,HdEV,LdEV,dEV,or	(LO)
A	3			T	Y	P	E		A3 TYPE (S) ..... none,HI,LO,HdEV,LdEV,dEV,or	(dEV)
A	4			T	Y	P	E		A4 TYPE (S) ..... none,HI,LO,HdEV,LdEV,dEV,or	(none)
A	1			D	L	I	N		A1 DeLay IN (S) ..... 0/.4/1/2/5/15/30/60 Sec	(0)
A	2			D	L	I	N		A2 DeLay IN (S) ..... 0/.4/1/2/5/15/30/60 Sec	(0)
A	3			D	L	I	N		A3 DeLay IN (S) ..... 0/.4/1/2/5/15/30/60 Sec	(0)
A	4			D	L	I	N		A4 DeLay IN (S) ..... 0/.4/1/2/5/15/30/60 Sec	(0)
A	1		D	L	O	U	T		A1 DeLay OUT (S) .... 0/.4/1/2/5/15/30/60 Sec	(0)
A	2		D	L	O	U	T		A2 DeLay OUT (S) .... 0/.4/1/2/5/15/30/60 Sec	(0)
A	3		D	L	O	U	T		A3 DeLay OUT (S) .... 0/.4/1/2/5/15/30/60 Sec	(0)
A	4		D	L	O	U	T		A4 DeLay OUT (S) .... 0/.4/1/2/5/15/30/60 Sec	(0)
A	1		R	G	B	C	K		Alarm 1 RinGBaCK (S) ..... NO/YES	(NO)
A	2		R	G	B	C	K		Alarm 2 RinGBaCK (S) ..... NO/YES	(NO)
A	3		R	G	B	C	K		Alarm 3 RinGBaCK (S) ..... NO/YES	(NO)
A	4		R	G	B	C	K		Alarm 4 RinGBaCK (S) ..... NO/YES	(NO)
	I	N	P	U	T		P		INPUT P (H) ..... loop tag.block tag.output	(null)
	I	N	P	U	T		D		INPUT D (H) ..... loop tag.block tag.output	(null)
					E	S	N		Exec. Seq. No (H) ..... 001 to 250	

Alarms have priorities 1 to 5, with 1 the highest. They are reported to the operator faceplate in order of priority first and then in order of occurrence. Priority 1 causes the station bargraphs and condition (e.g. A1 HI) to flash and requires acknowledgment to stop flashing. Priority 2 also flashes the bargraphs and condition but stops flashing when the alarm clears (i.e. Self Clearing). Priority 3 causes the event LEDs (L and S) and condition to flash. Flashing stops only when the alarm is acknowledged. Priority 4 also causes the event LEDs and condition to flash but stops when the alarm clears. Priority 5 displays the alarm but does not require that it be acknowledged.

Alarm limits are in engineering units. A quickset ALARM feature is also available allowing alarm limits to be set quickly during operation. The settings are in engineering units but will also be displayed in % of range on the bargraph. Alarms are displayed as defined by the range pointer parameter. Alarms can be set to any engineering value within -10% to 110% of the range defined by the pointer. If a range is changed, the current alarm settings will be changed to be the same % within the new range. For example, if a HI alarm is currently set at 100.0 with a range of 0.0 to 100.0 and the range is changed to 300.0 to 400.0, the HI alarm will be moved to 400.0.

Each alarm can be enabled or disabled when in the quickset ALARM mode. The configuration allows an alarm to be enabled or disabled on a cold start. When an alarm is disabled, it will not operate but will retain settings for return to the enabled mode. Complete operator faceplate functions, relating to alarms, are described in the sections describing the specific faceplate design. All alarms have the following features:

Deadband - requires that the signal either drop below or exceed the limit setting by the amount of the deadband before the alarm clears (goes low). The alarm deadband is set as a fixed % of the range pointer scale.

Delay-In Time - requires that the input remain above (or below) the limit setting for the delay time before the alarm trips (goes high). This can help prevent nuisance alarms that may be tripping due to process noise.

Delay-Out Time - requires that the input remain below (or above) the limit setting plus deadband for the delay time before the alarm will clear (goes low). This can help prevent inadvertent clearing of alarms due to process noise.

Ringback - causes a previously acknowledged alarm to require acknowledgment (priorities 1-4) when the alarm clears.

Alarm Types

HI compares the process input with the limit setting and will trip the alarm status high (1) when the process is equal to or higher than the limit setting. The alarm status will clear (0) when the process is less than the limit setting minus the deadband.

LO compares the process input with the limit setting and will trip the alarm status high (1) when the process is equal to or less than the limit setting. The alarm status will clear (0) when the process is greater than the limit setting plus the deadband.

HI DEV compares the difference between the process input and the deviation input (P-D) with the limit setting and will trip the alarm status high (1) when (P-D) is equal to or greater than the limit setting. The alarm status will clear (0) when (P-D) is less than the limit setting minus the deadband.

LO DEV compares the difference between the deviation input and the process input (D-P) with the limit setting and will trip the alarm status high (1) when (D-P) is equal to or greater than the limit setting. The alarm status will clear (0) when (D-P) is less than the limit setting minus the deadband.

DEV compares the absolute difference between the process input and the deviation input |P-D| with the limit setting and will trip the alarm status high (1) when |P-D| is equal to or greater than the limit setting. The alarm status will clear (0) when |P-D| is less than the limit setting minus the deadband.

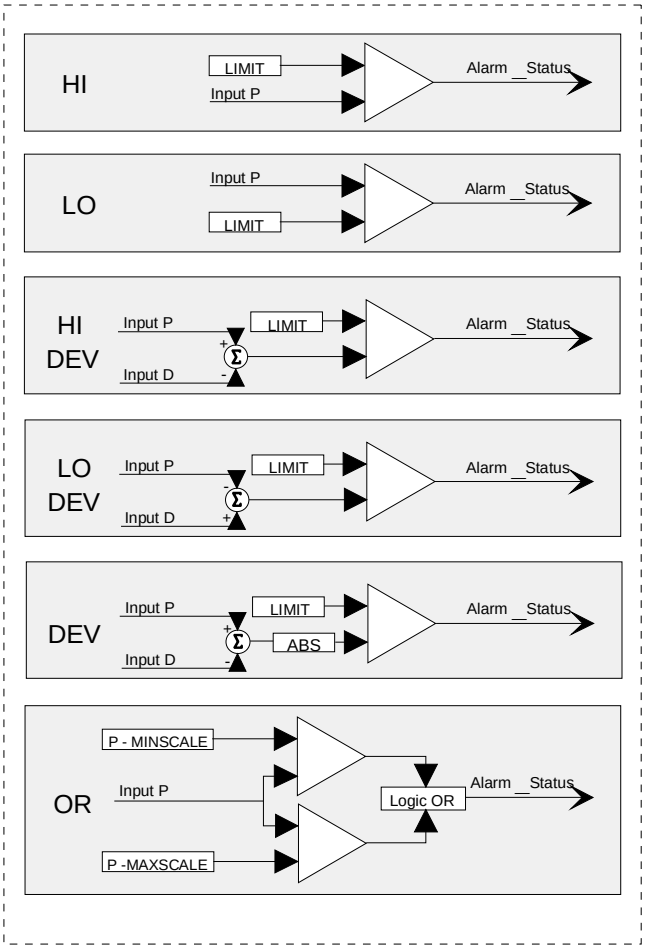

BLOCK DIAGRAM

OR compares the process input with the range limits referenced by the range pointer parameter and will trip the alarm status high (1) when the process is equal to or greater than the high limit or equal to or less than the low limit. The alarm status will clear (0) when the process is less than the high limit minus the deadband or greater than the low limit plus the deadband.

POWER UP - During a warm start, all alarms will be handled the same as during a hot start: outputs are initialized at the last state, all previously acknowledged alarms are treated as acknowledged, and any new alarms will be processed on the first scan cycle. On a cold start, all alarm outputs are initialized at 0, all alarms are reset and any new alarms, based on the block inputs, will be processed during the first scan cycle. Also, during a cold start, alarms will be enabled or disabled as determined by the PU ENable parameters.

Alarm Status

Alarm status is available with Modbus communication or the Local Instrument Link option for alarm management at a remote location. The alarm status is available in coils with Modbus communication or the same information is packed into a single word (Alarm Status Word) with LIL communication. Additional information can be found in Section 6 Network Communications.

An alarm status word is shown below.
A_=1 when the alarm is active
N_=1 when the alarm is Not acknowledged
E_=1 when the alarm is enabled (when the alarm is disabled the E, N, and A bits are set to 0)
OS=1 indicates that all alarms are identified as Out of Service which means that all alarms function normally but the OS flag indicates to a higher level device that they can be ignored. OS can not be set locally.
CC=1 indicates a configuration change has occurred. It can be reset by a write command.
AE=1 indicates an Active Event is present within the loop. It will clear when all the loop events clear.
NA will be set to 1 when events occur and at least one within the loop has not yet been acknowledged. It can be reset to 0 which will acknowledge all events within the loop or when 0 will indicate all active events have been acknowledged

BIT	15	14	13	12	11	10	9	8	7	6	5	4	3	2	1	0
1	**AE**	**NA**	**CC**	**OS**	**E4**	**N4**	**A4**	**E3**	**N3**	**A3**	**E2**	**N2**	**A2**	**E1**	**N1**	**A1**
0																

4.2.12 AND_ - AND Logic

AND_ function blocks perform a logical AND on the three inputs. Any unused input will be set high (1).

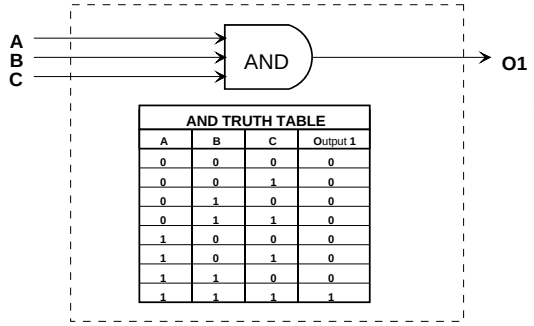

AND TRUTH TABLE

A	B	C	Output 1
0	0	0	0
0	0	1	0
0	1	0	0
0	1	1	0
1	0	0	0
1	0	1	0
1	1	0	0
1	1	1	1

BLOCK DIAGRAM

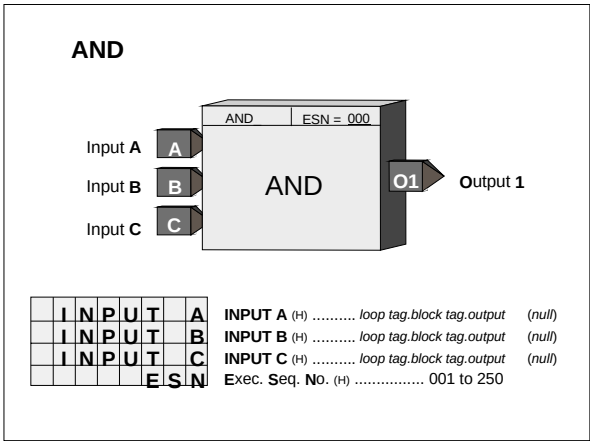

4.2.13 AOE_ - Analog Output- Ethernet (V2.4)

AOE_ function blocks are available when the optional Ethernet communication board is installed. Up to 32 AOE blocks can be used and they are assigned in sequence with each use, station wide.

The range pointer parameter (Input R) enables the block to pass the range scaling to AIE function blocks in other 353R and Siemens controllers connected over the Ethernet network.

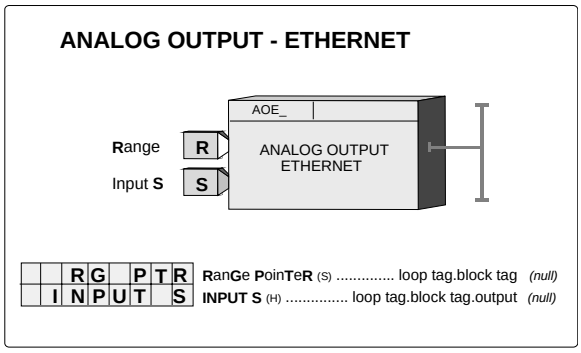

4.2.14 AOL_ - Analog Output - LIL

AOL_ function blocks are available when the optional LIL communication board is installed. They enable the station to provide a LIL global output, received as an interconnection from another function block. AOL block numbers are assigned in sequence with each use, station wide. The configuration requires the entry of a LIL Channel number to which the data is to be assigned. The range pointer parameter (input R) enables the block to scale the LIL global output (GO), in the standard $80-$F80 range, for the range of input S. If the pointer is not configured the value will be scaled as 0.0 to 100.0.

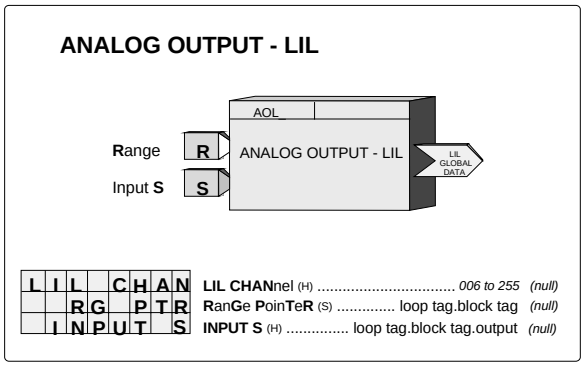

	1	2	3	4	5	6	7	8	9	10`	11	256
n	GO		MINSCALE		MAXSCALE		ENG UNITS			Input S		105

4.2.15 AOUT_ - Analog Outputs

AOUT_ function blocks convert function block interconnection signals, connected to input S, to a block output having a range of 4-20 mAdc. Input D can be used to disconnect the output from the load when asserted high (1). This feature is useful when two or more controllers are connected to a common load. When one controller is connected to the load, others are disconnected using the disconnect feature. The function block includes scaling to range the 4-20 mA output with the block input signal. The range pointer parameter (input R) tells the block where to obtain scaling information. If this parameter is not configured the block will use a range of 0.0 to 100.0.

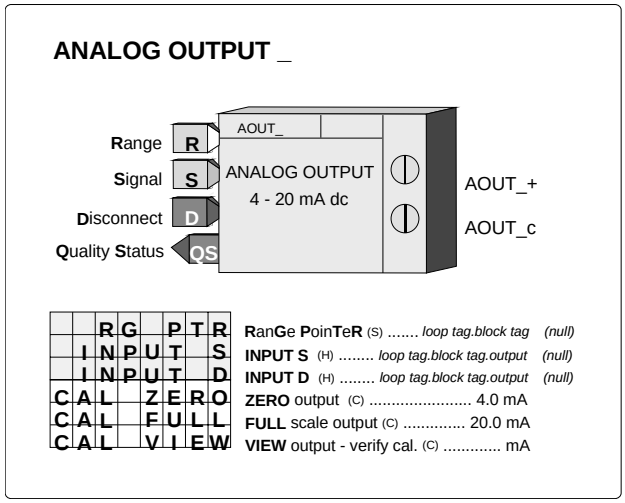

Two analog output function blocks are available on the Controller Board and one additional on the Expander Board. Function block names and terminal identifications are listed below. The output is factory calibrated for 4-20 mAdc and should not require field calibration. However, field calibration can be performed if desired. The output is calibrated by rotating the pulser until the desired output (i.e. 4.0 mA for zero) is obtained and then pressing the store button. A verify mode is available during calibration that will show the mA value in the numeric display as the pulser adjusts the output over the full range.

Output QS is the Quality Status output. It will go high if the output driver detects a high impedance or an open circuit. The alphanumeric will flash AOUT_.OC when an open circuit condition is detected. The QS output could also be used to switch to a second output circuit in a redundancy application.

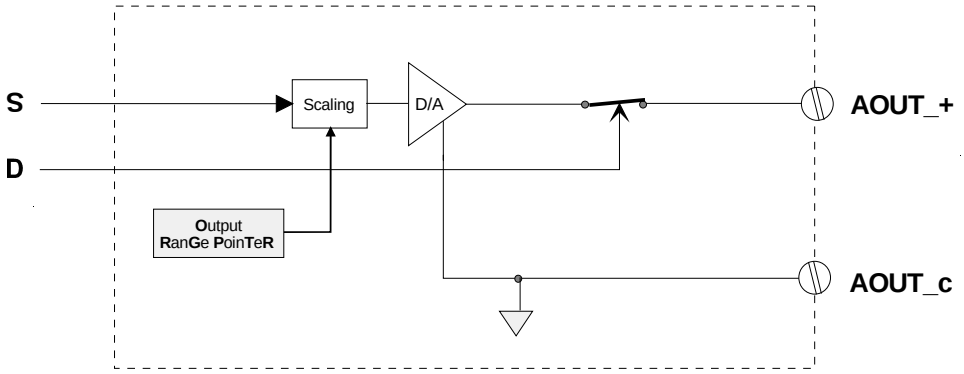

BLOCK DIAGRAM

4.2.16 ASN_ - ARCSINE

ASN__ function blocks, in firmware 1.30 and higher, accept an input between -1.0 and 1.0 and provide an output signal in radians of which the input is the sine.

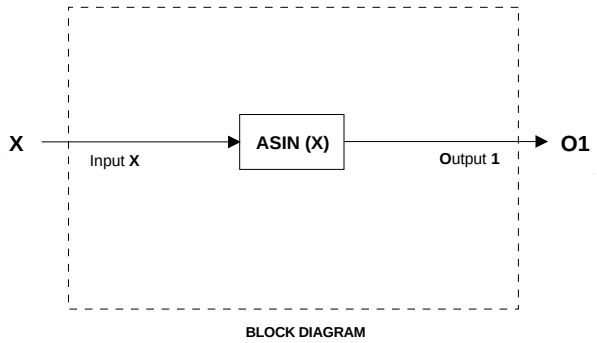

BLOCK DIAGRAM

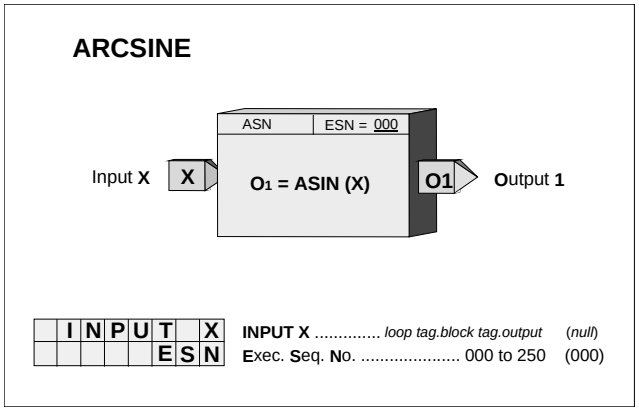

4.2.17 ATD_ - Analog Trend Display

ATD_ blocks, in firmware 1.30 and higher, can be used as needed in loops (up to a maximum of 5 per loop) to trend an analog variable connected to input A. The block can store up to 170 data points depending upon the use of the enable/disable function (see below). A trend can be displayed by using Modbus commands. Data can be retrieved and displayed on a remote operator station that has functionality that can retrieve, interpret and display data packets from the station. For example, in a PC or i|station running i|ware PC operator interface software, trend data can be displayed on a loop detail screen or analog detail screen.

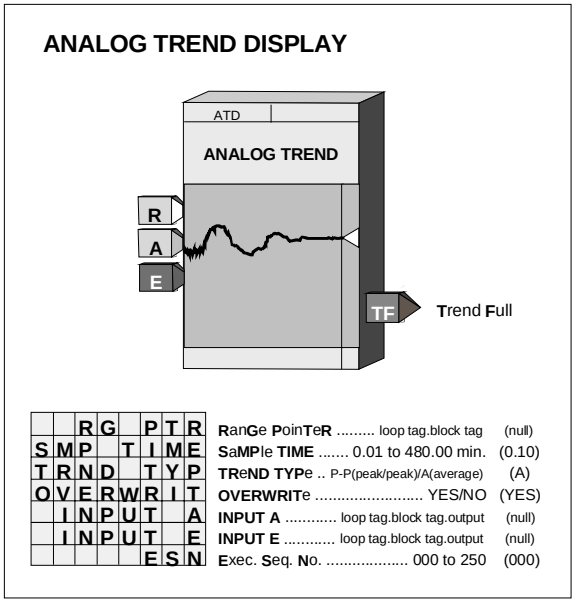

Parameter TRND TYP allows data to be stored in one of two formats: the average over each sample time or the peak/peak values of the data over each sample time. All data is stored in a normalized form based on the value of the RG PTR (range pointer) input. The range information will be part of the data packet when retrieved over the network communications. When this input is unconfigured, a range of 0.0 - 100.0 will be used.

Several inputs can control the operation of the ATD function block. Input E (enable) can be used to enable the trend function when high (1) or unconfigured. Trend action can be disabled by setting E low (0). Each time the function block is enabled a new trend packet will be created.

The block also includes parameter OVERWRIT that, when set to YES, will cause the block to overwrite old data (i.e. circular file). When the parameter is set to NO, the block will stop trending when full and retain the data until reset. When the full state is reached, output TF (Trend Full) will go high (1). This function can be used to enable a second ATD block.

4.2.18 ATN_ - ARCTANGENT

ATN__ function blocks, in firmware 1.30 and higher, output a signal in radians of which the input is the tangent.

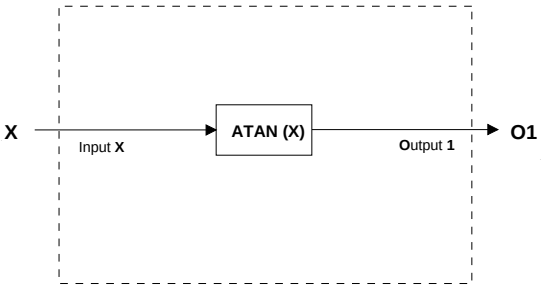

BLOCK DIAGRAM

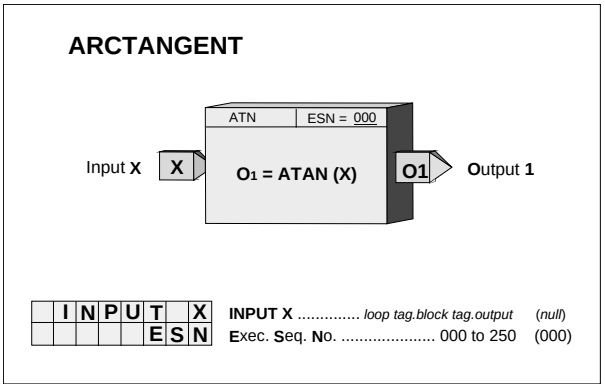

4.2.19 AWE_ - Analog Write Ethernet (V3.0)

AWE_ function blocks are available when the optional Ethernet communication board[6] is installed in the controller. It enables the controller to write analog data to other Modbus devices over the Ethernet network.

Up to 32 AWE_ blocks are available. Blocks are assigned in sequence, controller wide, with each use.

Data can be written as a real floating-point number or as a 16-bit integer as configured by the DATA TYP parameter. A Floating point number can be selected to have one of four byte orders (BYTE ORD) with 1 being the most common (see Table 4-4 under the AIE block description). An integer is converted from the block input S, which is a floating point number, by the MIN INT & MAX INT parameters using the range scaling information obtained from the source function block in the controller with the range pointer input R. Both Unsigned Integer (Uint) & Signed Integer (Sint) options are available. See the table listing parameters and default values below.

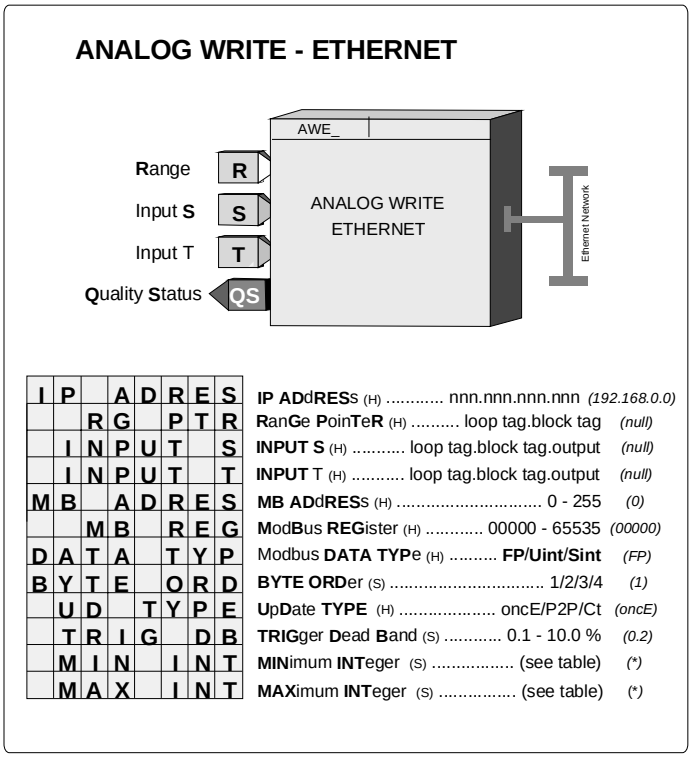

The IP ADRES parameter is used to configure the IP address of the destination Modbus device. The MB ADRES parameter allows a Modbus address to be configured. When connecting to other Siemens controllers the Modbus address is set to 1. In some cases, other devices may use a different address or when going through a Modbus TCP/IP gateway a Modbus network may have multiple devices, each having a unique address.

Selection	Parameter	Default Value
Uint	MIN INT	0
Uint	MAX INT	65535
Sint	MIN INT	-32768
Sint	MAX INT	+32767

There are three write update options that can be configured by the UD TYPE parameter.

1. oncE will write once to the MB REG (Modbus Register). The controller will write when the input value changes by more than the value set with the TRIG DB parameter. This parameter is set based on a percentage of the range determined by the range pointer input R.
2. P2P will update at the controller peer to peer rate set in the ETHERNET block.
3. Ct will update at the cycle time of the controller.

The Ct option is normally only used when writing to I/O outputs in a PID control loop. Input T can be used to trigger a write. This would be used in cases where the oncE option has been selected, Input S does not change so as to trigger a write based on the trigger dead band, and there may be a concern that the receiving device has lost the value.

Output QS indicates the quality of the write operation and will go high (1) when the write is not completed successfully. This is normally associated with failure of the destination device to receive data due to a communication failure or a misconfiguration of the device.

[6] *Requires Ethernet communications board firmware version 2.0 or later*

4.2.20 BATOT - Batch Totalizer

BATOT function blocks can be used on a one per loop basis and integrate an analog input. Each provides an output signal representing a total integrated value over the time base selected. For example, if the time base is minutes and input A is 5.0 for 60 minutes, output TL would equal 300.0. The total can be displayed on the operator faceplate as <loop tag>.T if the configuration parameter DISP TOT is set to YES. A 6-character maximum name (e.g. GAL) is entered in configuration under TOT UNIT to identify the totalizer units.

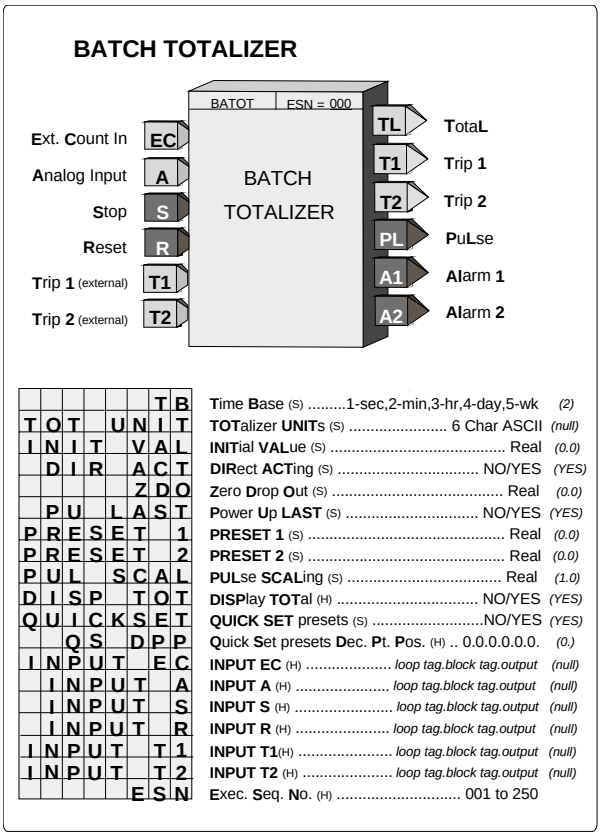

Input S asserted high (1) will stop the integrator action. Input R will cause the integrator function to reset to the initial value (INIT VAL). These inputs do not affect the **PuLse** output. The integrator output is summed with the INITial VALue entered in configuration to provide the count total. The INIT VAL is used as the total when the BATOT is reset.

DIR ACT set to YES will cause the integrator to increase its output while NO will cause the integrator output to decrease. When INIT VAL is set to a predetermined batch amount, decreasing action will provide a count down counter. This is sometimes preferred since the count output then represents the amount remaining in a batch.

ZDO is used for setting a small positive value, insuring that the integrator will stop when the flow is shut off, which might not otherwise happen if a flowmeter zero is out of calibration.

The function block has two trip presets: PRESET 1 and PRESET 2. These can be set to cause a high output (1) from A1 or A2 when the count total equals or exceeds the preset values. The preset values, entered in configuration, can also be set using the QUICK button if the parameter QUICKSET has been set to YES. The QS DPP parameter allows fixing the decimal point during quickset to speed up changes to these settings. A parameter value with no decimal point position, the default, is for applications dealing with the totalizer count as whole units. An external preset can be used by providing an input to T1 and/or T2 and when used, the internal preset will be ignored. If an external preset is used, the value can be viewed but not changed in QUICKSET.

The action of the presets is also determined by the action setting of the integrator. When DIR ACT is set to YES the presets will be direct acting and will cause outputs A1 or A2 to go high when the integrated total is equal to or higher than the preset. If set to NO the total will cause A1 or A2 to go high when the total is equal to or lower than the preset. The actual preset value is available on outputs T1 and T2.

The function block can also provide a pulse output to drive a remote counter. The pulse output function integrates the input signal using the same time base and output pulses at a rate determined by the PUL SCAL configuration parameter. This parameter determines the change to the integrator total that must occur to cause a new output pulse. In the above example, if PUL SCAL equals 10, a total of 30 pulses will have occurred in the same time period. The PUL SCAL value is also the multiplier that would be used to read the exact value of gallons to a remote counter. The pulse output function operates on the absolute value of the analog input. When both negative and positive values are to be totalized, a CoMParator block can be used to sense the polarity of the analog input and the CMP output can then indicate a direction to the counter.

Be sure that the PUL SCAL setting does not require a pulse rate output greater than the scan cycle time of the controller under the maximum input conditions. Using the same example, if the maximum A input is 60.0 and the

cycle time is 0.1 sec, the maximum required pulse rate is 0.1/sec. The condition is satisfied since the maximum output requirement is less than the maximum pulse rate of 5/sec available with a 0.1 sec cycle time. The requirement would also be satisfied if a PUL SCAL of 1 was selected which would have required a maximum pulse rate of 1/sec.

POWER UP - During a warm start, if the configuration parameter PU LAST was set to YES, the integrator function will initialize with the last value prior to power down and all outputs will be initialized to the last value prior to power down. If set to NO, or during a cold start, the integrator and all outputs will initialize to 0.

Input EC allows the batch totalizer block to be used with another function block, such as the DINU that provides a count signal. When input A is not configured, it will be set to (0.0). The EC input is summed with the initial value for use as the total. This value will now be displayed as the total on the operator faceplate and the presets will act on this value to provide outputs A1 and A2.

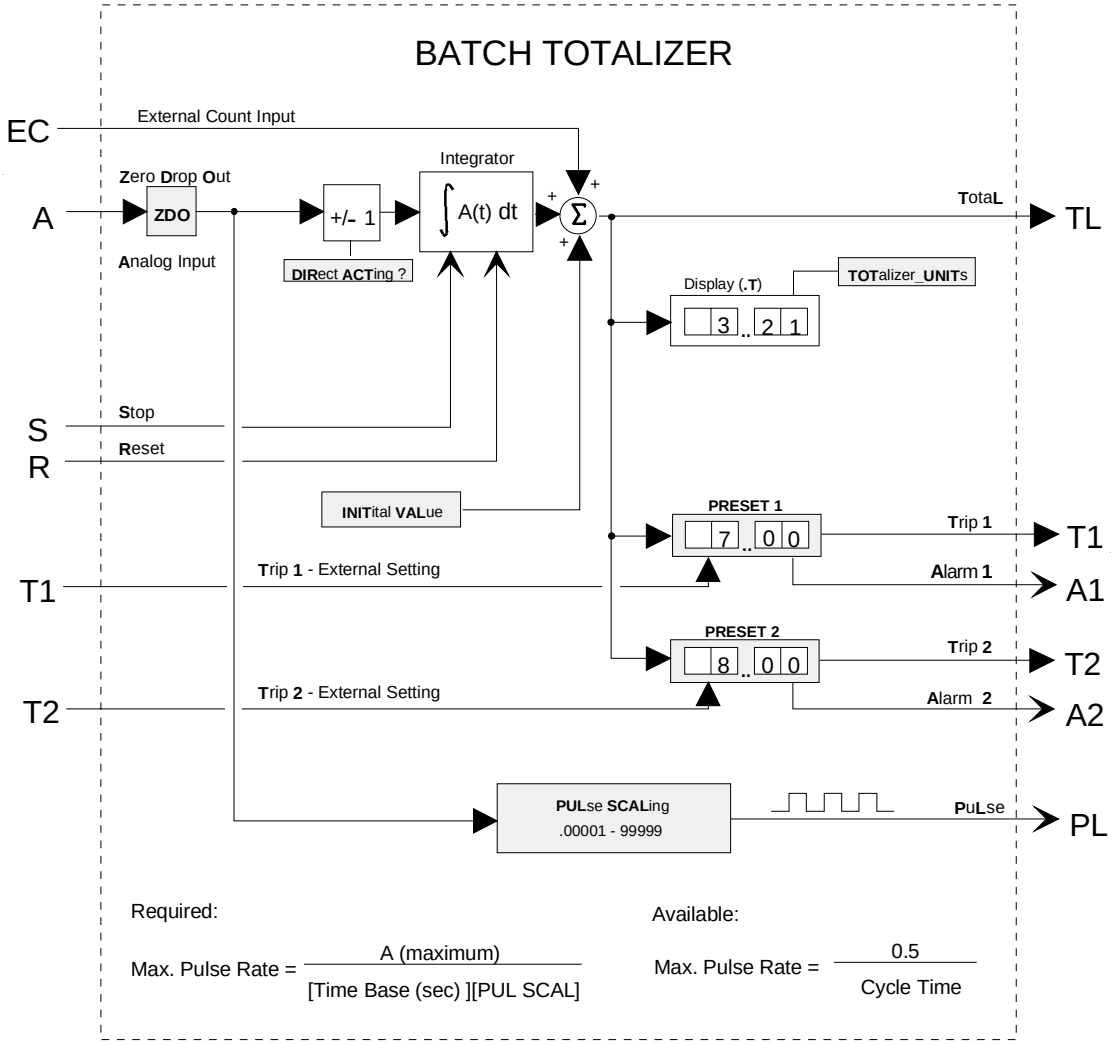

BLOCK DIAGRAM

4.2.21 BATSW - Batch Switch

BATSW function blocks can be used on a one per loop basis. Each is used with a PID function block to eliminate overshoot during startup conditions. When placed in the feedback path of the controller it causes the reset component of the controller to be reduced (if controller action is Rev). Without the use of a batch switch during startup, the controller output (O1 = GE + R) will equal full output since the reset will wind up. This requires the process to overshoot the setpoint in order to bring the controller output back down. With a batch switch in the feedback path, a lower reset value will be present when crossover occurs, thus reducing or eliminating overshoot.

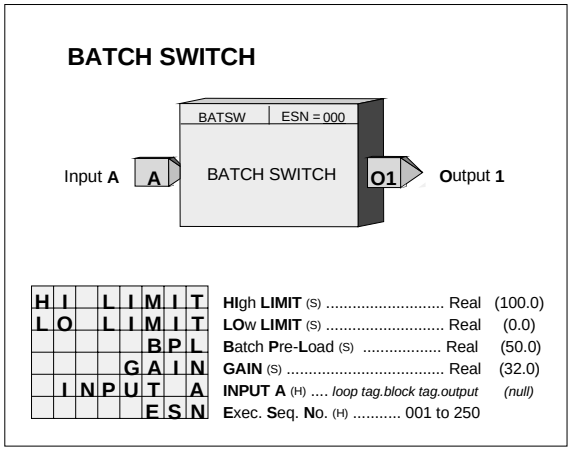

As input A equals or exceeds the HI or LO LIMIT setting, the output of the batch switch will be either decreased (HI LIMIT) or increased (LO LIMIT), changing the feedback signal and therefore the controller reset signal. This maintains controller output at the batch switch limit setting and eliminates reset windup.

If a controller has a large proportional gain setting, the reset can be modified too much, such that the process may under shoot the setpoint during a startup condition. The BPL (Batch Pre-Load) is adjusted to optimize the controller for startup conditions by limiting how much the batch switch can adjust the controller feedback signal.

When the controller output is within its normal operating output, the batch switch has no effect on the controller. This allows the controller to be tuned optimally for normal operating conditions and the batch switch to add additional compensation, very similar to derivative action, only during startup.

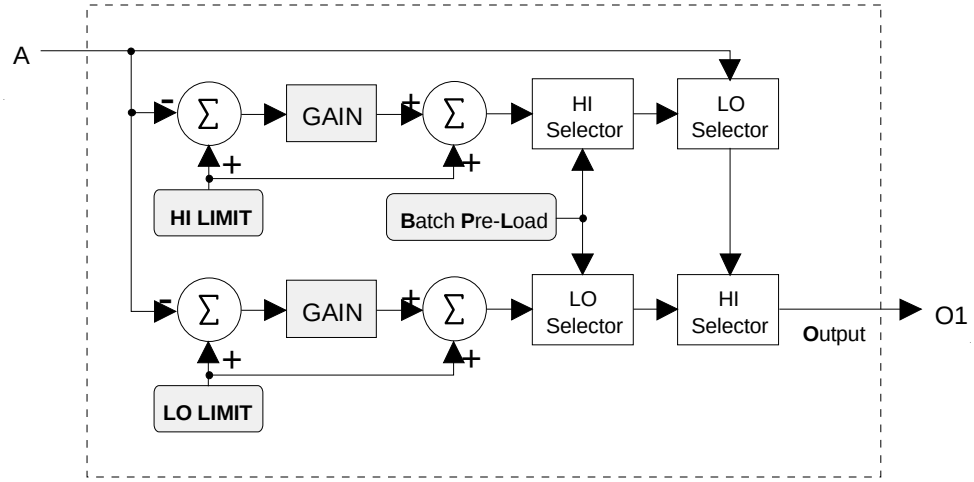

BLOCK DIAGRAM

4.2.22 BIAS - Bias

BIAS function blocks can be used on a one per loop basis and provide a means to bias a signal, such as the setpoint in an external set application. Inputs A and E (external bias) are summed and then added to the operator adjustable bias B.

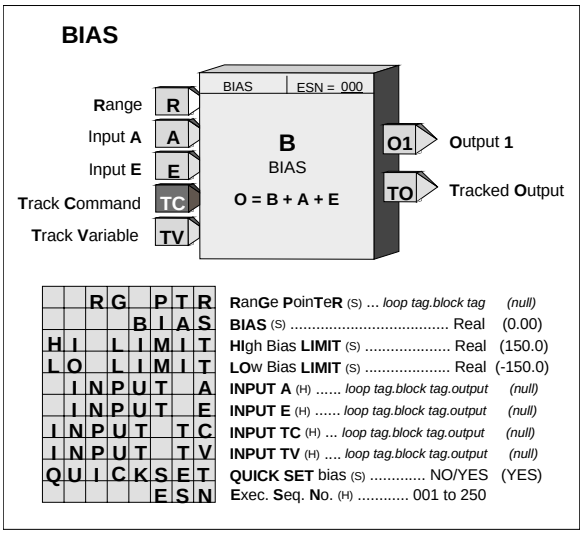

Track Command input TC, asserted high (1), will cause the block output to track input TV and BIAS to be recalculated as B = TV - (A+E). The value of B will be clamped at the HI and LO LIMIT settings. It is important to realize that the inputs and outputs are in engineering units and the limits must be adjusted accordingly with the expected minimum and maximum required range values. The default values have been set to -150.00 and +150.00, which might be the normal expected limits when using the default range of 0.0 to 100.0. These values can be set lower but have a maximum setting of +/-150% of the range pointer value. The default range is 0.00 to 100.00 if the pointer is not configured.

If, for example, the BIAS block is used to bias a flow setpoint with a range pointer (input R) of 0-6.00 GPM, the maximum bias adjustments would be +/-9.00. If limit adjustments of +/-50% of this range are desired, then the BIAS block LO LIMIT should be set at -3.00 and the HI LIMIT at +3.00. If a range change is made, the current LIMIT settings and the current BIAS value will be changed to be the same % value within the new range.

The BIAS can be adjusted using the QUICKSET feature if the parameter QUICKSET is set to YES. The BIAS value will continuously change as the knob is adjusted but the STORE button must be pressed when the final value is reached to insure that the new BIAS setting will be retained on a Cold power up condition.

Any unused inputs to the block will be set equal to 0.

The TO (Tracked Output) is normally used in applications where an external device is being used to set a bias in place of the BIAS parameter (B is then set to 0.0). When it is desired to have the output of the BIAS block track the TV variable, the external device is forced to track TO. Input E will then equal TV- [A+(0.0)] and, therefore, the BIAS block output O1 will equal TV.

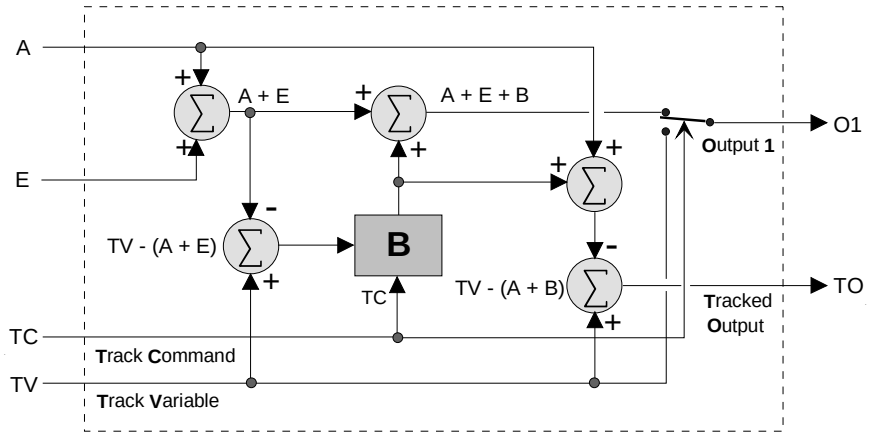

BLOCK DIAGRAM

When a configuration containing the BIAS function block is edited in i|config and then downloaded to an on-line controller, the controller will ignore a change to the BIAS parameter value and continue to run with the pre-download value.

4.2.23 CIE_- Coil Input - Ethernet (V3.0)

CIE_ function blocks are available when the optional Ethernet communication board[7] is installed in the controller. It enables the controller to obtain Coil data from other stations over the Ethernet network.

Up to 32 CIE_ blocks are available. Blocks are assigned in sequence, controller wide, with each use. Up to 16 Coils can be obtained from a Modbus device. Each Coil is assigned to block outputs C0 – CF.

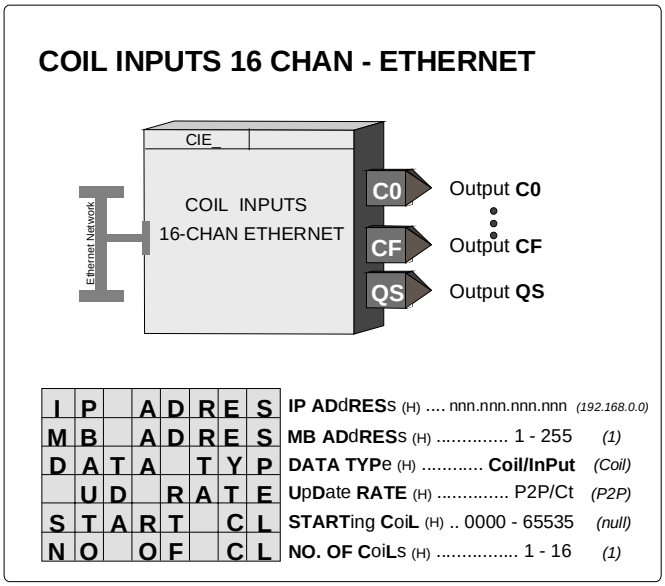

The IP ADRES parameter is used to configure the IP address of the source Modbus device. The MB ADRES parameter allows a Modbus address to be configured. When connecting to other Siemens controllers, the Modbus address is set to 1. In some cases, other Modbus devices may use a different address or when going through a Modbus TCP/IP gateway a Modbus network may have multiple devices, each having a unique address.

The START CL parameter identifies the location of the first Coil. Subsequent Coils, up to 16, can be obtained by setting the NO OF CL parameter to a value greater than 1. The DATA TYP parameter enables reading of Coils (Modbus Function Code 01) or Inputs (Modbus Function Code 02). Both are treated the same but the Coil type is the most common usage. The UD RATE parameter configures the rate at which the block will request data. The P2P setting will update the data at the rate set by the P2P RATE parameter in the ETHERNET block. The Ct setting will update the data at the cycle time of the controller.

Output QS indicates the quality of the received data and will go high (1) when the data is bad. This is normally associated with failure to receive data due to a communication failure or a misconfiguration of the source.

[7] *Requires Ethernet communications board firmware version 2.0 or later*

4.2.24 CHR_ - Characterizer

CHR_ function blocks provide 10 segments that can be used to characterize the X input signal. Individual segments are configured by entering the Xn, Yn and Xn+1, Yn+1 points for each segment. All Xn+1 points must be greater than the associated Xn points. Input X is in engineering units and the Y points should be in the engineering units desired for the characterizer output.

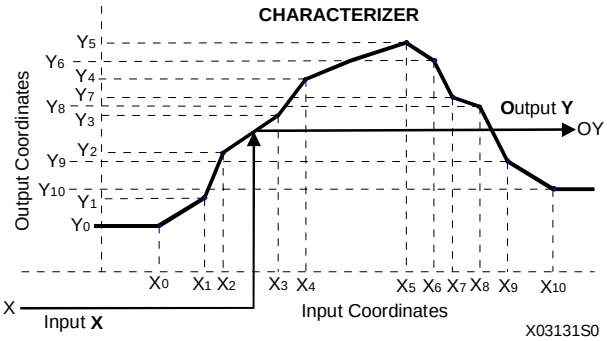

BLOCK DIAGRAM

CHARACTERIZER

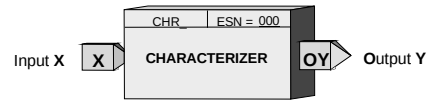

X 0	Input Coordinate **X0** (S) ..... Real *(0.0)*
X 1	Input Coordinate **X1** (S) ..... Real *(10.0)*
X 2	Input Coordinate **X2** (S) ..... Real *(20.0)*
X 3	Input Coordinate **X3** (S) ..... Real *(30.0)*
X 4	Input Coordinate **X4** (S) ..... Real *(40.0)*
X 5	Input Coordinate **X5** (S) ..... Real *(50.0)*
X 6	Input Coordinate **X6** (S) ..... Real *(60.0)*
X 7	Input Coordinate **X7** (S) ..... Real *(70.0)*
X 8	Input Coordinate **X8** (S) ..... Real *(80.0)*
X 9	Input Coordinate **X9** (S) ..... Real *(90.0)*
X 1 0	Input Coordinate **X10** (S) ..... Real *(100.0)*
Y 0	Output Coordinate **Y0** (S) ..... Real *(0.0)*
Y 1	Output Coordinate **Y1** (S) ..... Real *(10.0)*
Y 2	Output Coordinate **Y2** (S) ..... Real *(20.0)*
Y 3	Output Coordinate **Y3** (S) ..... Real *(30.0)*
Y 4	Output Coordinate **Y4** (S) ..... Real *(40.0)*
Y 5	Output Coordinate **Y5** (S) ..... Real *(50.0)*
Y 6	Output Coordinate **Y6** (S) ..... Real *(60.0)*
Y 7	Output Coordinate **Y7** (S) ..... Real *(70.0)*
Y 8	Output Coordinate **Y8** (S) ..... Real *(80.0)*
Y 9	Output Coordinate **Y9** (S) ..... Real *(90.0)*
Y 1 0	Output Coordinate **Y10** (S) ..... Real *(100.0)*
I N P U T X	**INPUT X** (H) ..... *loop tag.block tag.output* *(null)*
E S N	**E**xec. **S**eq. **N**o. (H) ..... 001 to 250

4.2.25 CMP_ - Comparator

CMP_ function blocks compare analog input A with an external or internal limit setting and provide a high (1) output when the limit is exceeded.

ACTION - the CMP block can be configured as direct or reverse action. Direct action will cause the output to go high when input A is equal to or greater than the limit. Reverse action will cause the output to go high when input A is equal to or less than the limit.

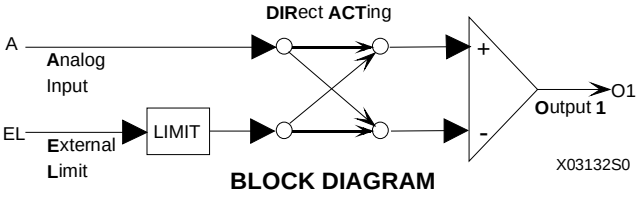

BLOCK DIAGRAM

COMPARATOR

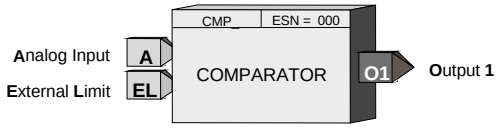

L I M I T	Comparator **LIMIT** (S) ..... Real (0.0)
D B A N D	**D**ead **BAND** (S) ..... Real (0.5)
D I R A C T	**DIR**ect **ACT**ing (S) ..... NO/YES (YES)
I N P U T A	**INPUT A** (H) ..... *loop tag.block tag.output* *(null)*
I N P U T E L	**INPUT EL** (H) ..... *loop tag.block tag.output* *(null)*
E S N	**E**xec. **S**eq. **N**o. (H) ..... 001 to 250

DEAD BAND - the output will return from a high (1) output to a low (0) output when input A is less than the limit - Dead BAND setting for direct action or greater than the limit + Dead BAND for reverse action.

EXTERNAL LIMIT - When input EL is configured, the LIMIT setting will be ignored and the value of input EL will be used as the limit value.

4.2.26 COS_ - COSINE

COS_ function blocks, in firmware 1.30 and higher, accept radian inputs and output the cosine of that angle.

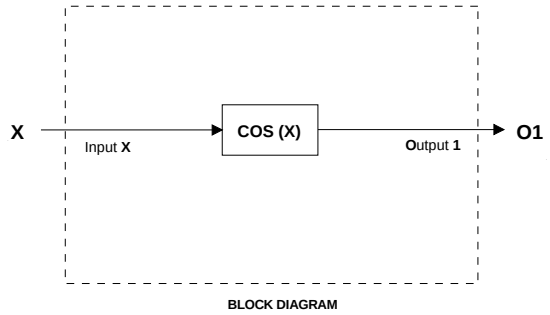

COSINE

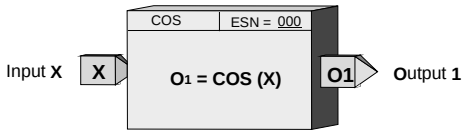

	I	N	P	U	T		X
					E	S	N

INPUT X ..... *loop tag.block tag.output* (*null*)
Exec. **S**eq. **N**o. ..... 000 to 250 (000)

4.2.27 CWE_ - Coil Write Enable (V3.0)

CWE_ function blocks are available when the optional Ethernet communication board[8] is installed in the controller. It enables the controller to write Coil data to other stations over the Ethernet network.

Up to 32 CWE_ blocks are available. Blocks are assigned in sequence, controller wide, with each use. Up to 16 ON/OFF block inputs, I0 to IF, can write to 16 consecutive coil locations in a destination Modbus device.

The IP ADRES parameter is used to configure the IP address of the destination Modbus device. The MB ADRES parameter allows a Modbus address to be configured. When connecting to other Siemens controllers, the Modbus address is set to 1. In some cases, other Modbus devices may use a different address or when going through a Modbus TCP/IP gateway a Modbus network may have multiple devices, each having a unique address.

The START CL parameter identifies the location of the first Coil. The NO OF CL parameter identifies the total number of coils, up to 16, to write.

There are three write update options that can be configured by the UD TYPE parameter.

COIL WRITE - ETHERNET

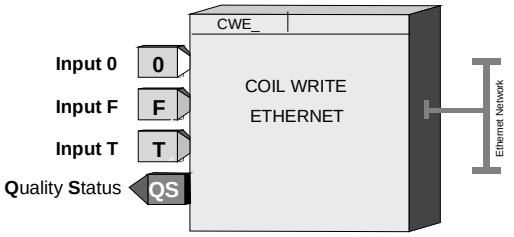

	I	N	P	U	T		0
	I	N	P	U	T		1
	I	N	P	U	T		2
	I	N	P	U	T		3
	I	N	P	U	T		4
	I	N	P	U	T		5
	I	N	P	U	T		6
	I	N	P	U	T		7
	I	N	P	U	T		8
	I	N	P	U	T		9
	I	N	P	U	T		A
	I	N	P	U	T		B
	I	N	P	U	T		C
	I	N	P	U	T		D
	I	N	P	U	T		E
	I	N	P	U	T		F
	I	N	P	U	T		T
I	P		A	D	R	E	S
M	B		A	D	R	E	S
S	T	A	R	T		C	L
N	O		O	F		C	L
U	D			T	Y	P	E

INPUT 0 (H) ..... loop tag.block tag.output *(null)*
INPUT 1 (H) ..... loop tag.block tag.output *(null)*
INPUT 2 (H) ..... loop tag.block tag.output *(null)*
INPUT 3 (H) ..... loop tag.block tag.output *(null)*
INPUT 4 (H) ..... loop tag.block tag.output *(null)*
INPUT 5 (H) ..... loop tag.block tag.output *(null)*
INPUT 6 (H) ..... loop tag.block tag.output *(null)*
INPUT 7 (H) ..... loop tag.block tag.output *(null)*
INPUT 8 (H) ..... loop tag.block tag.output *(null)*
INPUT 9 (H) ..... loop tag.block tag.output *(null)*
INPUT A (H) ..... loop tag.block tag.output *(null)*
INPUT B (H) ..... loop tag.block tag.output *(null)*
INPUT C (H) ..... loop tag.block tag.output *(null)*
INPUT D (H) ..... loop tag.block tag.output *(null)*
INPUT E (H) ..... loop tag.block tag.output *(null)*
INPUT F (H) ..... loop tag.block tag.output *(null)*
INPUT T (H) ..... loop tag.block tag.output *(null)*
IP ADdRESs (H) ..... nnn.nnn.nnn.nnn *(192.168.0.0)*
MB ADdRESs (H) ..... 0 - 255 *(0)*
STARTing CoiL (H) ..... 0000 - 65535 *(0)*
NO. OF CoiLs (H) ..... 1 - 16 *(1)*
UpDate TYPE (H) ..... oncE/P2P/Ct *(oncE)*

[8] *Requires Ethernet communications board firmware version 2.0 or later*

1. oncE will write once to the START CL (Modbus Starting Coil. The controller will write when any block input value changes state.
2. P2P will update at the controller peer to peer rate set in the ETHERNET block.
3. Ct will update at the cycle time of the controller.

The Ct option is normally only used when writing time critical changes. Input T can be used to trigger a write. This would be used in cases where the oncE option has been selected, input values do not change, and there may be a concern that the receiving device has lost the values.

Output QS indicates the quality of the write operation and will go high (1) when the write is not completed successfully. This is normally associated with failure of the destination device to receive data due to a communication failure or a misconfiguration of the device.

4.2.28 DAM_ - Deviation Amplifier

DAM_ function blocks compute the difference between inputs A and B, amplify the difference signal, and sum the resultant with an internal BIAS and an external signal at input C. Unused inputs are set to 0.0.

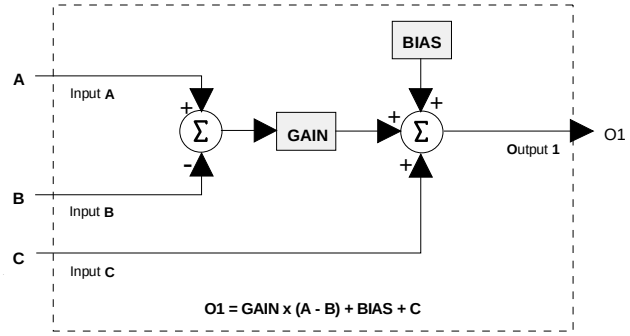

BLOCK DIAGRAM

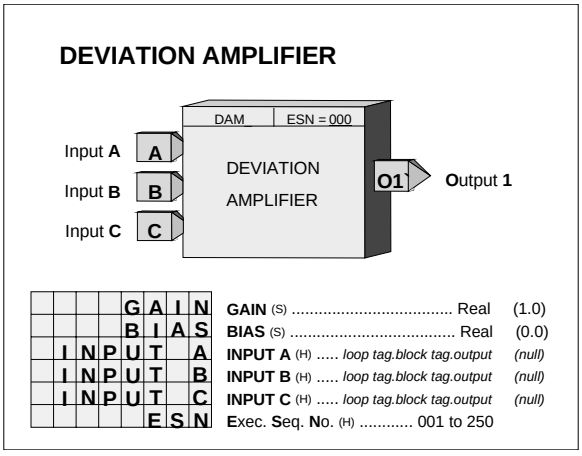

4.2.29 DIE_ - Digital Input - Ethernet (V3.0)

DIE_ function blocks are available when the optional Ethernet communication board[9] is installed in the controller. It enables the controller to read digital data from other stations over the Ethernet network.

Up to 32 DIE_ blocks are available. Blocks are assigned in sequence, controller wide, with each use. Digital data is On/Off data packed into a 16-bit word. This data is fanned out to block outputs D0 – DF.

The IP ADRES parameter is used to configure the IP address of the source device. The MB ADRES parameter allows a Modbus address to be configured. When connecting to other Siemens controllers, the Modbus address is set to 1. In some cases, other devices may use a different address or when going through a Modbus TCP/IP gateway a Modbus network may have multiple devices, each having a unique address.

DIGITAL INPUTS 16 CHAN - ETHERNET

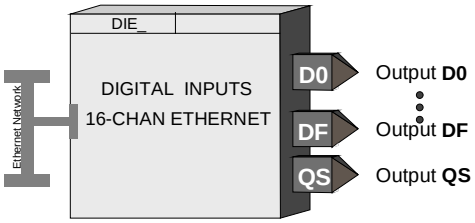

I	P		A	D	R	E	S
M	B		A	D	R	E	S
		M	B		R	E	G
	U	D		R	A	T	E
R	E	G		T	Y	P	E

IP ADdRESs (H) .... nnn.nnn.nnn.nnn *(192.168.0.0)*
MB ADdRESs (H) ..... 0 - 255 *(1)*
MB REGister (H) ..... 0000 - 65535 *(null)*
UpDate RATE (H) ..... P2P/Ct *(P2P)*
REGister TYPE (H) . **InPut/Hold**ing *(InPut)*

The MB REG parameter identifies the location of the digital data in the source device. The REG TYP parameter enables reading of Holding Registers (Modbus Function Code 03) or Input Registers (Modbus Function Code 04). Both are treated the same in most Modbus devices but the Input type is the most common usage. The use of DOE blocks in other Siemens controllers as the input source is defined by using the Modbus Registers from the table below. The UD RATE parameter configures the rate at which the block will request data. The P2P setting will update the data at the rate set by the P2P RATE parameter in the ETHERNET block. The Ct setting will update the data at the cycle time of the controller.

Output QS indicates the quality of the received data and will go high (1) when the data is bad. This is normally associated with failure to receive data due to a communication failure or a misconfiguration of the source.

FB Number	MB Register	FB Number	MB Register	FB Number	MB Register	FB Number	MB Register
DOE01	31025	DOE09	31033	DOE17	31041	DOE25	31049
DOE02	31026	DOE10	31034	DOE18	31042	DOE26	31050
DOE03	31027	DOE11	31035	DOE19	31043	DOE27	31051
DOE04	31028	DOE12	31036	DOE20	31044	DOE28	31052
DOE05	31029	DOE13	31037	DOE21	31045	DOE29	31053
DOE06	31030	DOE14	31038	DOE22	31046	DOE30	31054
DOE07	31031	DOE15	31039	DOE23	31047	DOE31	31055
DOE08	31032	DOE16	31040	DOE24	31048	DOE32	31056

[9] *Requires Ethernet communications board firmware version 2.0 or later*

4.2.30 DIL_ - Discrete Input _ LIL

DIL_ function blocks are available when the optional LIL communication board is installed. DIL block numbers are assigned in sequence with each use, station wide. The block allows the station to obtain a global word (GW) from another station on the LIL.

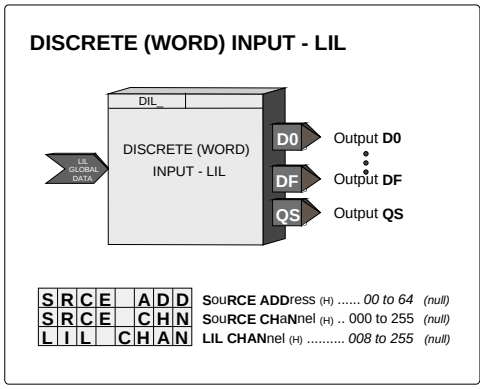

The function block has 16 outputs, D0 through DF, which represent the values of bits 0-F in the global word. Output QS indicates the quality of the received data and will go high (1) when the data is bad. This is normally associated with failure to receive global data due to a LIL failure or a misconfiguration of the source.

The received global word will also be re-transmitted by this station as a parameter 1 value in the configured channel n.

	1	2	3	4	5	6	7	8	9	10`	11	12
n	GW	SA/SC										

4.2.31 DIN_ - Digital Inputs

DIN_ function blocks can be used to sense a discrete signal from an external source and provide a block output representing the state of this signal. Blocks are available on the Controller Board and on the Expander Board. Function block names (IDs) and terminal designators are listed in the Control Module Field Terminal Assignments in Section 9.1 Model 353RCM_ _ _ _B_.

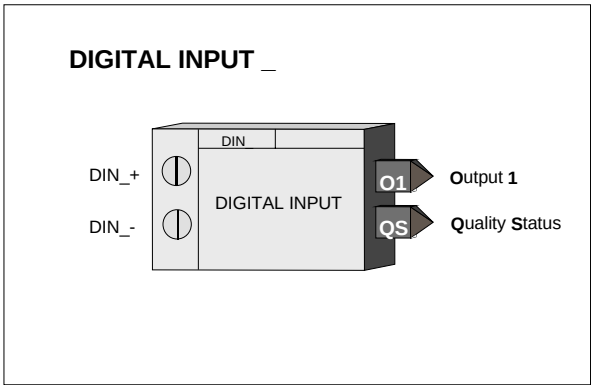

The block output is high (1) when the input is on and low (0) when off.

Output QS indicates the quality status of the output signal O1 and will be high (1) when the output is of bad quality. Bad quality indicates any hardware failure of the input converter.

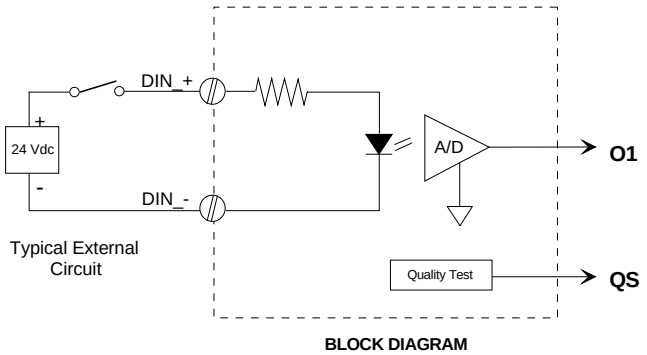

4.2.32 DINU_ - Digital Inputs, Universal

DINU_ blocks have multi-function capability:

- sensing a discrete input and providing a high (1) or low (0) output representing the state of the input
- totalizing and scaling the count of input pulses
- converting the rate of input pulses to a scaled analog frequency output

Two DINU_ blocks are available on the I/O expander board. The fixed names (IDs) of these blocks and their terminal designations are listed in Figure 9-4 Controller Module, Field Terminal Assignments in Section 9 Module Wiring and Specifications.

Output CT represents the scaled (actual count x K) total of input pulses that occurred since the last reset. This output is a real number and can be used in a number of applications, such as a direct count input to the BAT batch totalizer function block or in math operations, such as computing the difference between counts in a ratio trim circuit.

Output IS is the current state of the input at the time the block is executed at the start of each controller scan cycle. It will be low (0) when the input is low and high (1) when the input is high.

DIGITAL INPUT - UNIVERSAL

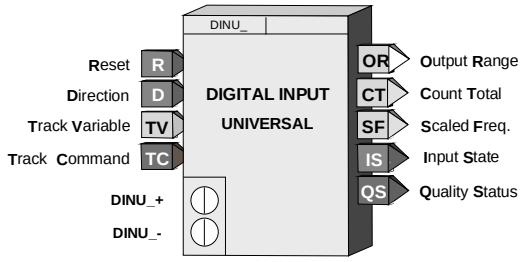

ZDO	Zero Drop Out (Engineering Units) (H) .. Real	*(0)*
FREQ MIN	FREQuency MINimum Hz (H) ..... Real	*(0)*
FREQ MAX	FREQuency MAXimum Hz (H) ..... Real	*(1000)*
K SCALE	K factor SCALE (H) ..... Real	*(1.0)*
DIG FILT	DIGital FILTer (S) ..... 0 to 180 sec	*(0 sec)*
MIN SCALE	MINimum SCALE (H) ..... Real	*(0.0)*
MAX SCALE	MAXimum SCALE (H) ..... Real	*(100.0)*
DPP	Decimal Point Position (preferred) (S) 0.0.0.0.0.0	(0.00)
ENGUNITS	ENGineering UNITS (S) ..... 6 Char ASCII (PRCT)	
PU LAST	Power Up LAST (S) ..... NO/YES	*(YES)*
INPUT R	INPUT R (H) ..... *loop tag.block tag.output*	*(null)*
INPUT D	INPUT D (H) ..... *loop tag.block tag.output*	*(null)*
INPUT TV	INPUT TV (H) ..... *loop tag.block tag.output*	*(null)*
INPUT TC	INPUT TC (H) ..... *loop tag.block tag.output*	*(null)*

Output SF is a scaled frequency (using the FREQ MIN and MAX parameters) that can represent flow rate, speed, or other transmitter variable that has a frequency signal. When the FREQ MAX parameter is set to 25 or less, a 20 msec contact debounce is used. When contact debounce is used, a pulse input must remain on for 20 msec to be recognized as a valid pulse. Output SF is linear with frequency and can be characterized using the CHR function block if necessary. An engineering range and units are assigned to this signal using the MINSCALE, MAXSCALE, DPP, and ENGUNITS parameters. They are available to other blocks using the OR output connection.

Input R resets output CT to 0.0. Input D controls the direction of the count. When direction input D is low (0), the count will move backwards, including negative values. The direction input feature enables the use of count down counters and also allows duplication of functions performed by previous computer pulse interfaces having a Pulse/Direction format. Input TC asserted high (1) will force the scaled count to track an external signal. This can be used in applications where the CT output is being used to set a value (e.g. setpoint) that can be changed from another source.

The quality status output QS indicates the quality of the block outputs and is high (1) when outputs CT, IS, or SF are of bad quality. Bad quality indicates a failure in the hardware conversion circuit.

POWER UP - With PU LAST set to YES, the CT output will power up at the last value during a hot or warm start. If set to NO, during a warm or a cold start it will be set to 0.0. The digital filter will be temporarily by-passed during a hot, a warm or a cold start.

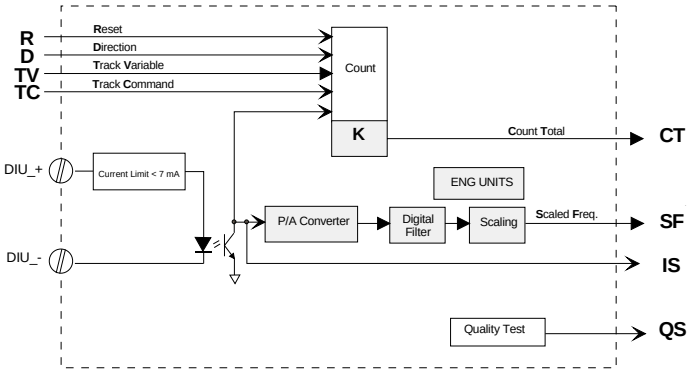

BLOCK DIAGRAM

4.2.33 DIV_ - Division

DIV_ function blocks perform simple arithmetic division. The output will be the quotient of the two configured inputs N/D. The output will be limited to the maximum real number and, if the divisor is 0.0, the output will go to the maximum real number with the sign determined by the numerator. If the numerator is 0.0, the output will be 0.0.

Any unconfigured inputs will be set equal to 1.0.

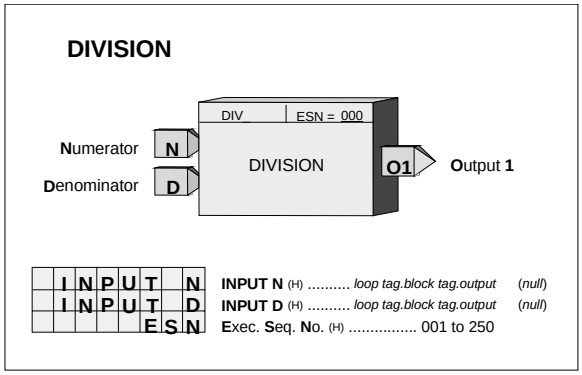

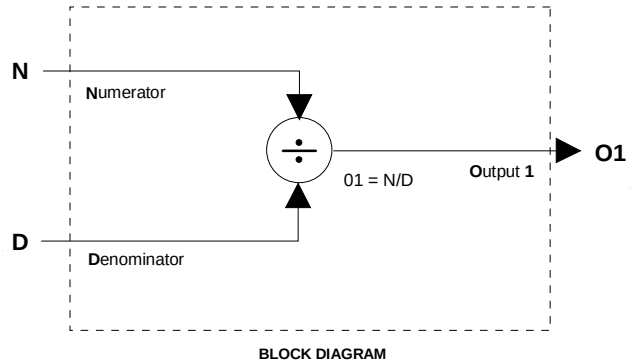

BLOCK DIAGRAM

4.2.34 DNC_ - Divide by N Counter

DNC_ function blocks provide a single output pulse for a pre-selected number of input pulses. The output will go high (1) with a positive transition of the input P and will return to a low (0) output on the succeeding positive transition.

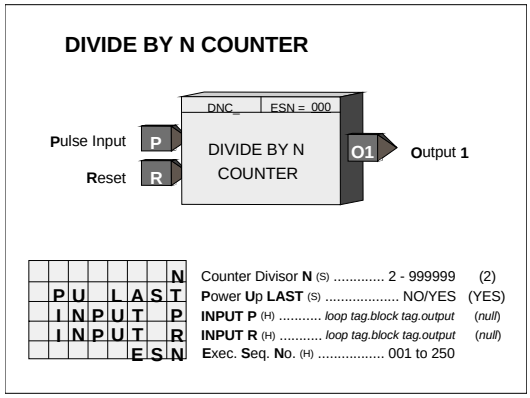

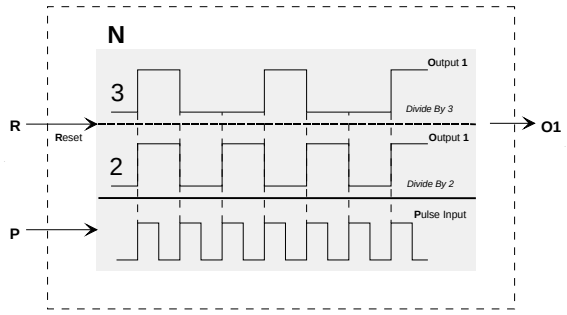

BLOCK DIAGRAM

POWER UP - During a hot or a warm start, with PU LAST set to YES, the block will retain the last count and continue at the last input/output states. If set to NO, during a warm or a cold start, the output and count will be initialized to 0.

4.2.35 DOE_ - Digital Output - Ethernet (V2.4)

DOE_ function blocks are available when the optional Ethernet communication board is installed. Up to 32 DOE blocks are available and they are assigned in sequence with each use, station wide.

Up to 16 digital inputs can be configured. The block will pack inputs I0 - IF into a single integer word which can be accessed from another controller having Ethernet communication capability.

Each DOE block is automatically assigned Modbus registers that can be accessed from any device having Modbus Ethernet capability.

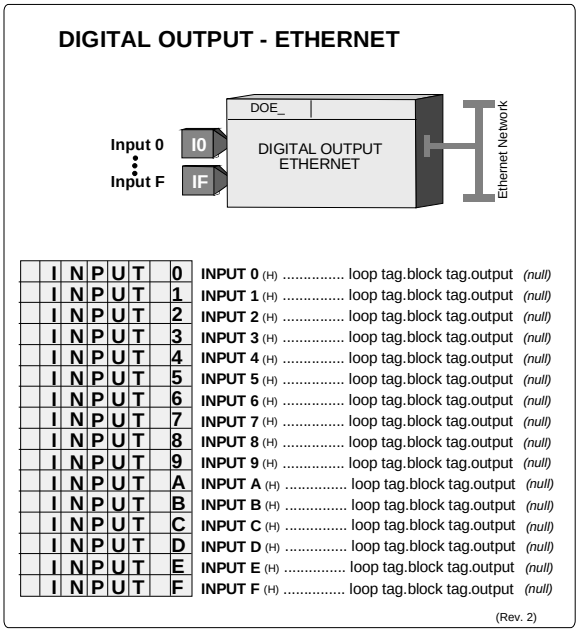

4.2.36 DOL_ - Discrete Output - LIL

DOL_ function blocks are available when the optional LIL communication board is installed. They allow the station to output a global word GW with bits 0-F representing the state 1 or 0 of each of the Boolean inputs D0 - DF. Unconfigured inputs are set to 0. DOL block numbers are assigned in sequence with each use, station wide.

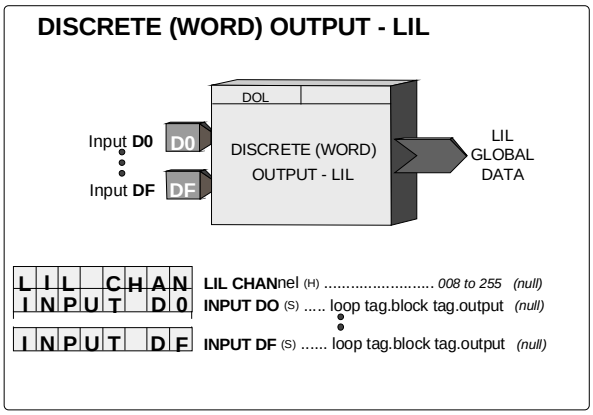

	1	2	3	4	5	6	7	8	9	10`	11	12
n	GW											

4.2.37 DOUT_ - Digital Outputs

DOUT_ function blocks are used to turn on remote devices powered from an external source. The negative terminal of the external power source must be connected to the station common. The transistor switch will turn on when the block input S is high (1) and will turn off when low (0). Two digital output function blocks are available on the Controller Board.

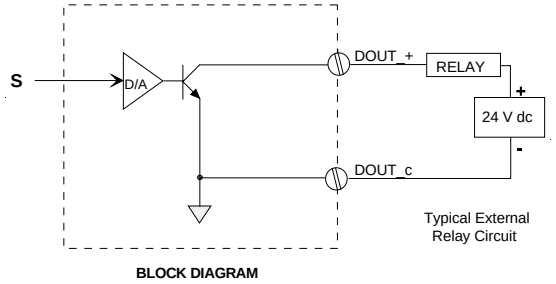

BLOCK DIAGRAM

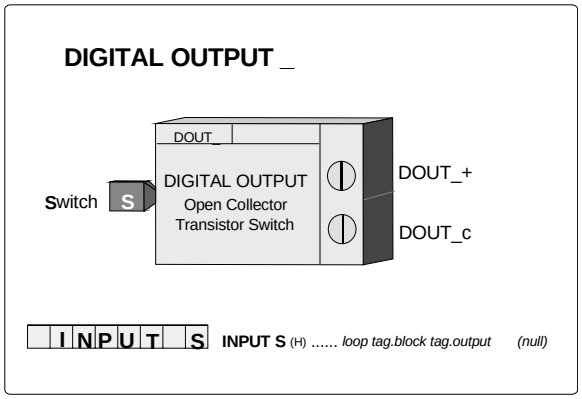

Terminal Connections:

DOUT1 ----- DOUT1+ (8) -- DOUT1c (9)
DOUT2 ----- DOUT2+ (10) -- DOUT2c (9)

4.2.38 DTM_ - Dead Time Table

DTM_ function blocks provide shift registers to hold the analog input signal A for a period of time and shift it from register to register to provide an overall delay between input and output as configured in parameter DEADTIME.

Input AT can be used to adapt the DEADTIME to an external signal. The actual shift register used as the block output will equal the whole value of input AT (e.g. 0.184 = register 0, 1.897 = register 1).

Output MA will provide the moving average of register 0 to the output register divided by the number of registers [e.g. output register = 50, MA = (R0+R1+R2+.....+R50)/51].

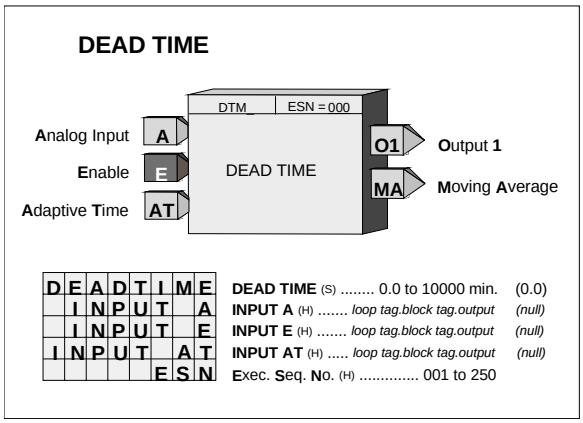

Input E asserted high (1) will enable the operation of the DTM block. When this input is not configured, it will be set high. A low (0) input will cause all registers and the outputs to equal the input A.

POWER UP - During a warm or cold start all outputs will be initialized at 0 and all registers will be initialized to the value of the input on the first scan.

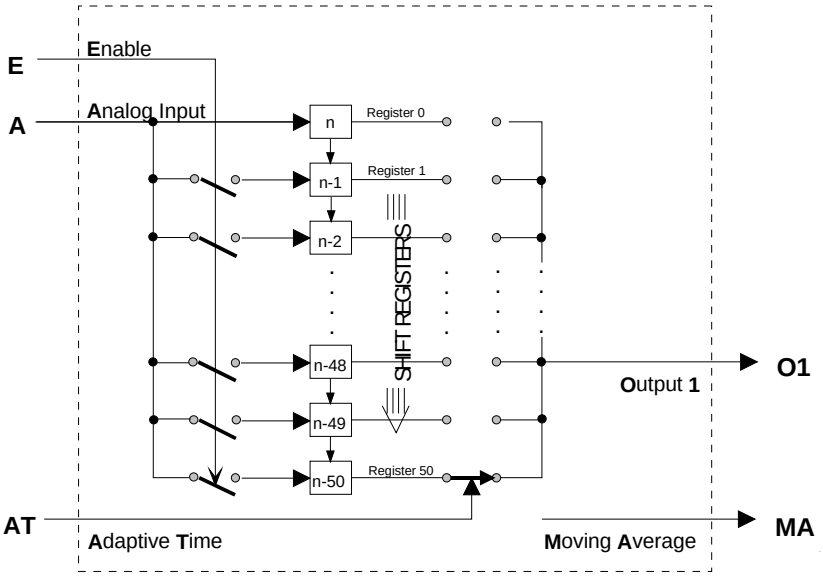

BLOCK DIAGRAM

4.2.39 DWE_ - Digital Write Enable (V3.0)

DWE_ function blocks are available when the optional Ethernet communication board[10] is installed in the controller. It enables the controller to write Digital data to other stations over the Ethernet network.

Up to 32 DWE_ blocks are available. Blocks are assigned in sequence, controller wide, with each use. Digital data is On/Off data packed into a 16-bit word.

The IP ADRES parameter is used to configure the IP address of the destination Modbus device. The MB ADRES parameter allows a Modbus address to be configured. When connecting to other Siemens controllers the Modbus address is set to 1. In some cases, other Modbus devices may use a different address or when going through a Modbus TCP/IP gateway a Modbus network may have multiple devices, each having a unique address. The MB REG parameter identifies the location of the register in the Modbus device.

There are three write update options that can be configured by the UD TYPE parameter.

1. oncE will write once to the START CL (Modbus Starting Coil. The controller will write when any block input value changes state.
2. P2P will update at the controller peer to peer rate set in the ETHERNET block.
3. Ct will update at the cycle time of the controller.

DIGITAL WRITE - ETHERNET

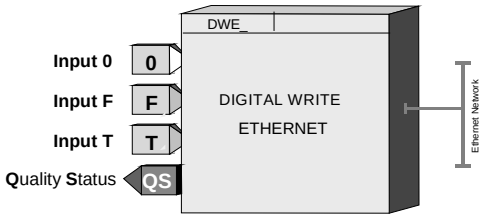

	I	N	P	U	T		0
	I	N	P	U	T		1
	I	N	P	U	T		2
	I	N	P	U	T		3
	I	N	P	U	T		4
	I	N	P	U	T		5
	I	N	P	U	T		6
	I	N	P	U	T		7
	I	N	P	U	T		8
	I	N	P	U	T		9
	I	N	P	U	T		A
	I	N	P	U	T		B
	I	N	P	U	T		C
	I	N	P	U	T		D
	I	N	P	U	T		E
	I	N	P	U	T		F
	I	N	P	U	T		T
I	P		A	D	R	E	S
M	B		A	D	R	E	S
		M	B		R	E	G
U	D			T	Y	P	E

INPUT 0 (H) ..... loop tag.block tag.output *(null)*
INPUT 1 (H) ..... loop tag.block tag.output *(null)*
INPUT 2 (H) ..... loop tag.block tag.output *(null)*
INPUT 3 (H) ..... loop tag.block tag.output *(null)*
INPUT 4 (H) ..... loop tag.block tag.output *(null)*
INPUT 5 (H) ..... loop tag.block tag.output *(null)*
INPUT 6 (H) ..... loop tag.block tag.output *(null)*
INPUT 7 (H) ..... loop tag.block tag.output *(null)*
INPUT 8 (H) ..... loop tag.block tag.output *(null)*
INPUT 9 (H) ..... loop tag.block tag.output *(null)*
INPUT A (H) ..... loop tag.block tag.output *(null)*
INPUT B (H) ..... loop tag.block tag.output *(null)*
INPUT C (H) ..... loop tag.block tag.output *(null)*
INPUT D (H) ..... loop tag.block tag.output *(null)*
INPUT E (H) ..... loop tag.block tag.output *(null)*
INPUT F (H) ..... loop tag.block tag.output *(null)*
INPUT T (H) ..... loop tag.block tag.output *(null)*
IP ADdRESs (H) ..... nnn.nnn.nnn.nnn *(192.168.0.0)*
MB ADdRESs (H) ..... 0 - 255 *(0)*
ModBus REGister (H) ..... 0000 - 65535 *(0)*
UpDate TYPE (H) ..... oncE/P2P/Ct *(oncE)*

The Ct option is normally only used when writing time critical changes. Input T can be used to trigger a write. This would be used in cases where the oncE option has been selected, input values do not change, and there may be a concern that the receiving device has lost the values.

Output QS indicates the quality of the write operation and will go high (1) when the write is not completed successfully. This is normally associated with failure of the destination device to receive data due to a communication failure or a misconfiguration of the device.

[10] *Requires Ethernet communications board firmware version 2.0 or later*

4.2.40 DYT_ - Delay Timer

DYT_ function blocks perform either an ON or OFF output delay as determined by the TYPE configuration parameter.

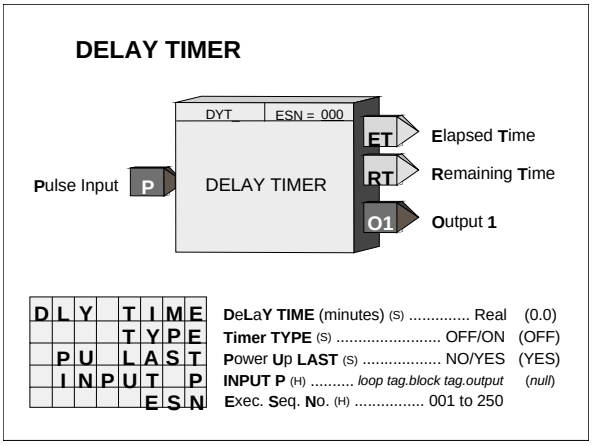

ON Delay - When input P is low (0), output O1 is low. If P goes high (1), the elapsed timer starts and sets O1 high upon reaching the DLY TIME, provided P is still high.

OFF Delay - When input P is high (1) the output is high. If P goes low (0), the elapsed timer starts and sets O1 low upon reaching the DLY TIME, provided P is still low.

In firmware 1.30 and higher, the DLY TIME is adjustable over the full range of the display, which is 0.00000 to 999999. In earlier versions, the minimum time setting is 0.1. If the delay time is set to less than the scan time of the station, the delay time will equal the scan time.

Output ET (elapsed time) will ramp from 0.0 to the value of DLY TIME and remain there until P resets the output. Output RT (remaining time) equals DLY TIME - ET.

POWER UP - During a warm or a hot start, with PU LAST set to YES, the block will initialize with the input/output states and elapsed time in effect at the instant power down occurred. A cold start, with PU LAST set to NO, will initialize the input/output states and elapsed time to 0.

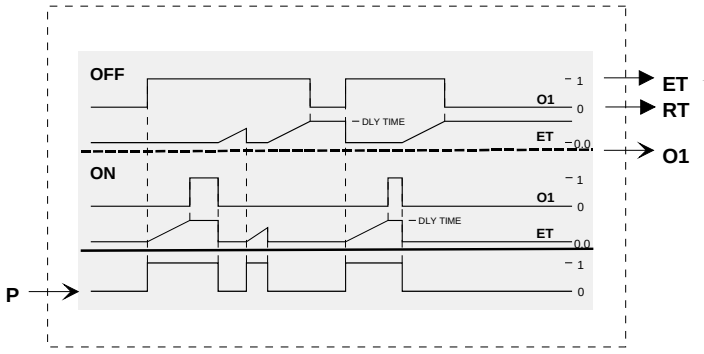

BLOCK DIAGRAM

4.2.41 E/I - External/Internal Transfer Switch

E/I function blocks can be used on a one per loop basis to select an analog signal, connected to input E (External) or input I (Internal), as a setpoint for the loop controller.

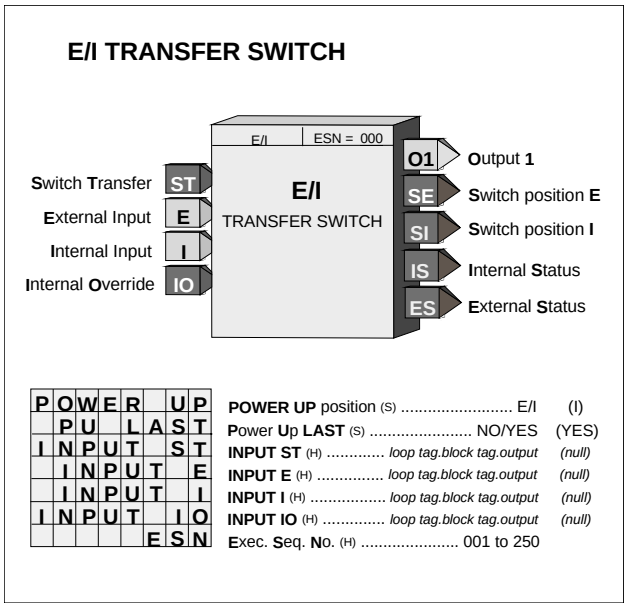

The position of the E/I switch can be changed on each positive transition of input ST and will normally be connected to the PS output of pushbutton block PB2SW, configured for momentary action. The SE output will normally be connected to the MD input of pushbutton block PB2SW. E/I switch position will be shown on the operator faceplate by a lighted LED: green for E, red for I.

The E/I switch position can also be changed by command over the Modbus or LIL network.

When PU LAST is set to YES, the E/I switch will power up in the last position during a hot or a warm start. During a cold start, it will power up in the position set by the POWER UP parameter. If PU LAST is set to NO, the E/I switch will power up in the last position during a hot start, but during a warm or cold start will power up in the position set by the POWER UP parameter.

The IO (Internal Override) input enables a HI (1) input to temporarily select the Internal Input as the function block output O1. This input does not affect the position of the E/I switch.

Outputs SE and SI indicate the actual position of the E/I switch. SE is HI (1) when in the E position and LO (0) when in the I position. SI is HI when in the I position and LO when in the E position. Outputs IS and ES indicate the actual source of the block output. IS is HI when O1 is the Internal input and is LO when O1 is the External input. ES is HI when O1 is the External input and is LO when O1 is the Internal input.

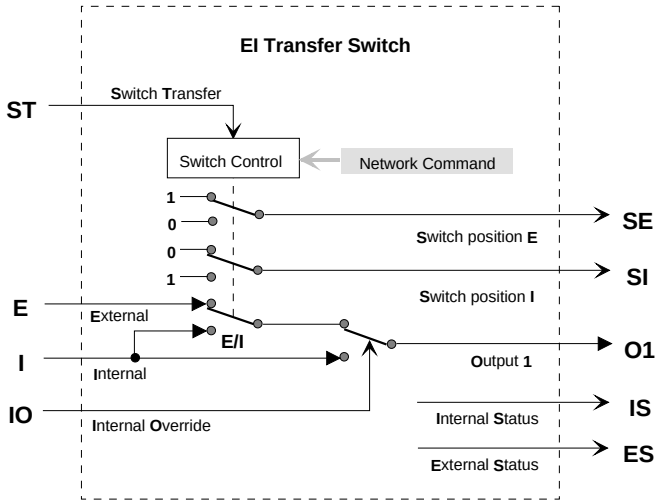

BLOCK DIAGRAM

4.2.42 ESL - Events Sequence Logger

ESL function blocks, in firmware 1.30 and higher, can be used on a one per loop basis to log events within the loop. Each ESL input can be assigned a user tag (up to 8 ASCII characters) which will be displayed when viewing the logged events from the front panel. Events, once triggered by a positive transition 0>1 input, will remain in the logger until reset. Reset can be initiated either by setting input R high (this input is edge sensitive and will reset the events on the leading edge) or by entering configuration and setting the parameter RESET to YES.

Events logged to the ESL function block can be viewed at the operator faceplate by pressing the ACK pushbutton when displaying the loop containing an ESL function block having logged events. The alphanumeric display will first step through any active alarms, status conditions or errors and then all the logged events that occurred since the last reset. The configured 8-character name will be shown in the alphanumeric display and the order of occurrence (ESL-1, ESL-2...) will appear in the numeric display when stepping through the event log. Other events such as alarms, status conditions, or errors can be similarly viewed if logged to the ESL function block.

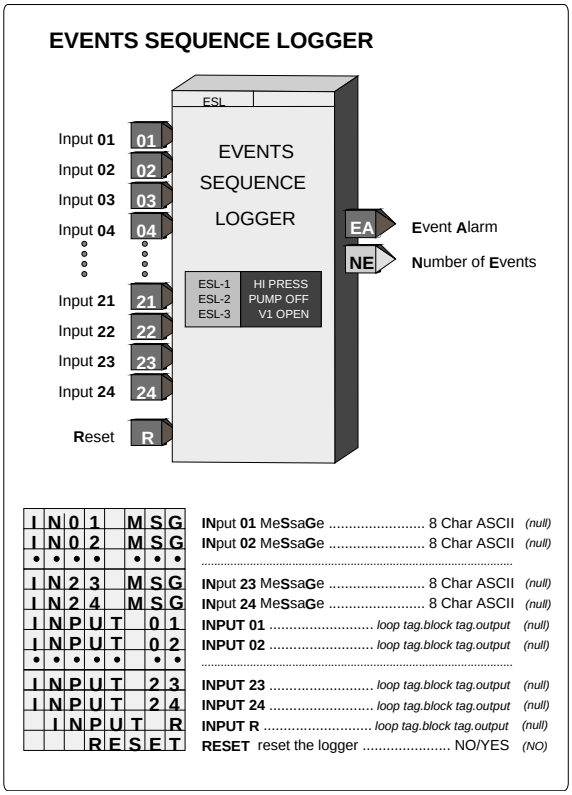

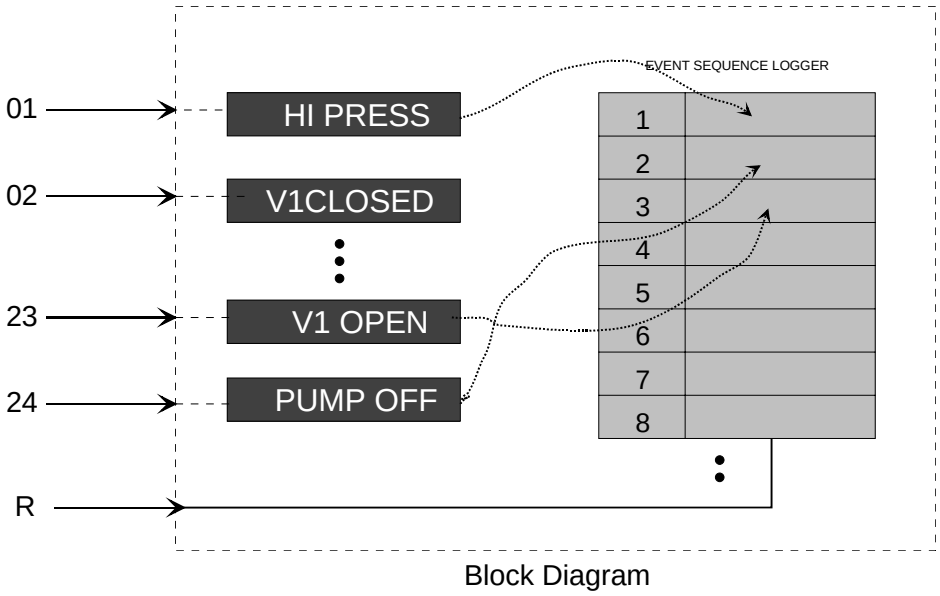

Block Diagram

4.2.43 EXP_ - NATURAL EXPONENTIATION

EXP_ function blocks, in firmware 1.30 and higher, perform the natural exponentiation function, base "e". The output will be the value "e" raised to the power of input X.

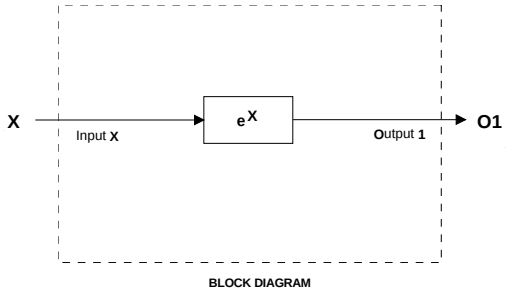

BLOCK DIAGRAM

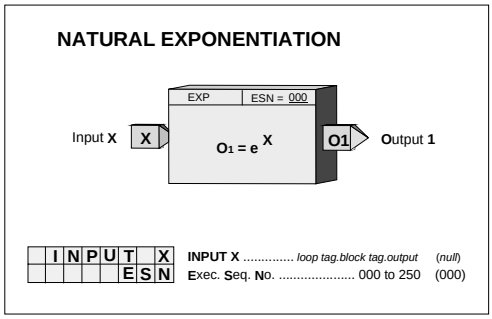

INPUT X ..... *loop tag.block tag.output* (*null*)
Exec. **S**eq. **N**o. ..... 000 to 250 (000)

4.2.44 EXT_ - EXPONENTIATION

EXT_ function blocks, in firmware 1.30 and higher, will provide an output that equals the Y input raised to the power of X input. All negative values of input Y will be treated as 0.0. When input Y is 0.0 and X is negative, the output will be set to the maximum number (i.e. 1.17...e38)

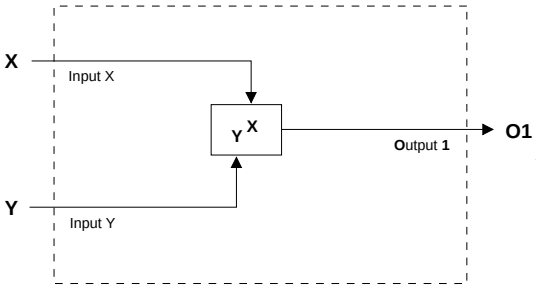

BLOCK DIAGRAM

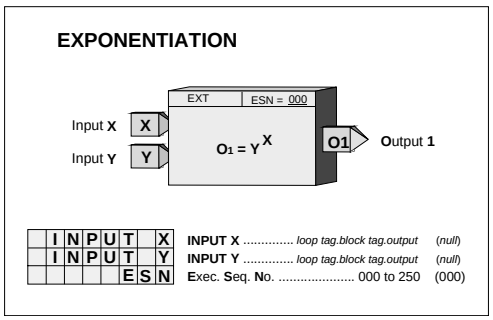

INPUT X ..... *loop tag.block tag.output* (*null*)
INPUT Y ..... *loop tag.block tag.output* (*null*)
Exec. **S**eq. **N**o. ..... 000 to 250 (000)

4.2.45 FTG_ - Falling Edge Trigger

FTG_ function blocks provide a high (1) output for one scan cycle each time input P transitions from a high (1) input to a low (0) input.

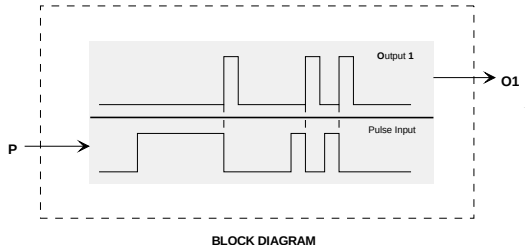

BLOCK DIAGRAM

FALLING EDGE TRIGGER

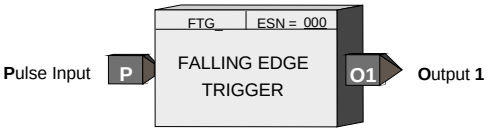

	I	N	P	U	T		P
					E	S	N

INPUT P (H) ..... *loop tag.block tag.output* (*null*)
Exec. **S**eq. **N**o. (H) ..... 001 to 250

4.2.46 GB_ - Gain & Bias

GB_ function blocks provide action, gain, and bias adjustments to input signal A. Although this block can provide signal scaling, it should not be used if needed as a reference for a range pointer. The SCL function block should be used when scaling is required for this purpose.

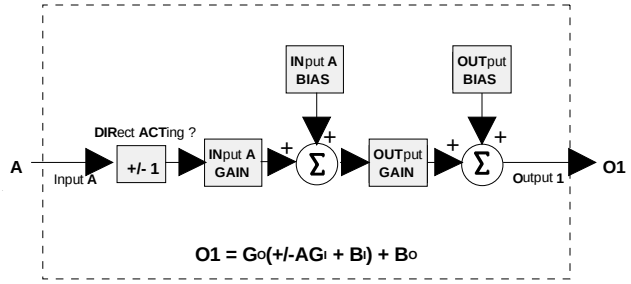

BLOCK DIAGRAM

GAIN & BIAS

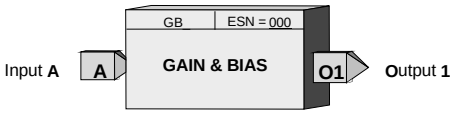

I	N	A		G	A	I	N	
O	U	T		G	A	I	N	
I	N	A		B	I	A	S	
O	U	T		B	I	A	S	
	D	I	R		A	C	T	
		I	N	P	U	T		A
					E	S	N	

INput **A GAIN** (S) ..... Real (1.0)
OUTput **GAIN** (S) ..... Real (1.0)
INput **A BIAS** (S) ..... Real (0.0)
OUTput **BIAS** (S) ..... Real (0.0)
DIRect **ACT**ing (S) ..... NO/YES (YES)
INPUT A (H) ..... *loop tag.block tag.output* *(null)*
Exec. **S**eq. **N**o. (H) ..... 001 to 250

4.2.47 HLD_ - Hold

HLD_ function blocks provide an output equal to the HOLD VAL set in configuration for interconnection to other function blocks.

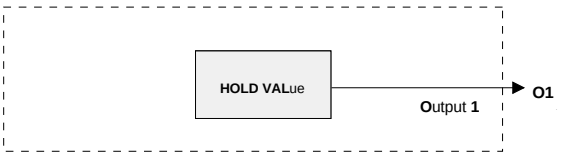

BLOCK DIAGRAM

HOLD

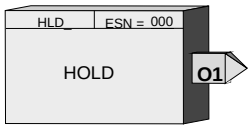

H	O	L	D		V	A	L

HOLD VALue (S) ..... Real (null)

4.2.48 ID - ID Controller

ID is an integral only controller and one of five controller types that can used on a one per loop basis. It uses external feedback to provide integral action and, therefore, allows interaction with other function blocks or external devices, such as pneumatic controllers and shutoff switches while eliminating windup that can occur with other controller types. Derivative action is provided when the parameter TD is non-zero.

When input A is high (1) the controller will operate in the normal auto mode and when low (0) will cause the output of the lag function to track the feedback signal. This will cause the controller output to track the feedback within the limits. When the controller is switched back to auto, the value at the input of the lag (GE+FB), if the GE is non-zero, will cause the output to integrate to a new output at the TI time constant.

The process range pointer parameter points to a function block that has range scaling, such as the analog input that is providing the process variable signal. This enables the controller to normalize the tuning parameters for the range of the process input. If this parameter is not configured, the controller will use a range scaling of 0.00 - 100.00.

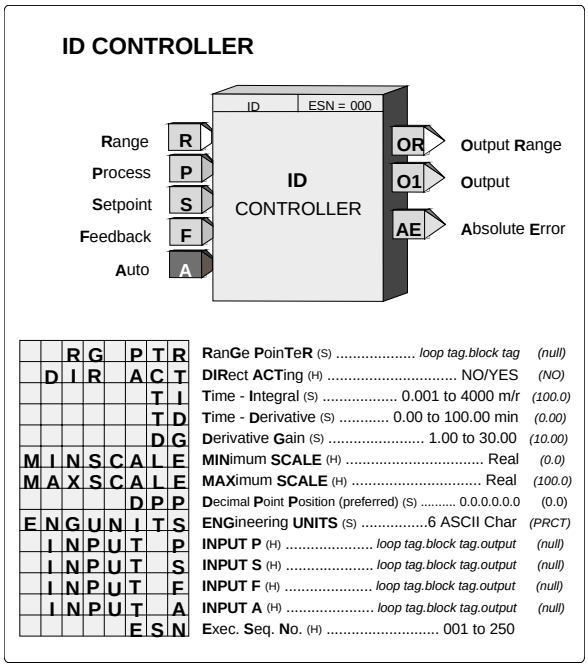

POWER UP - During a warm or cold start, the output will be initialized to the value of the MINSCALE parameter and all dynamic states will be initialized to their current input value on the first scan cycle.

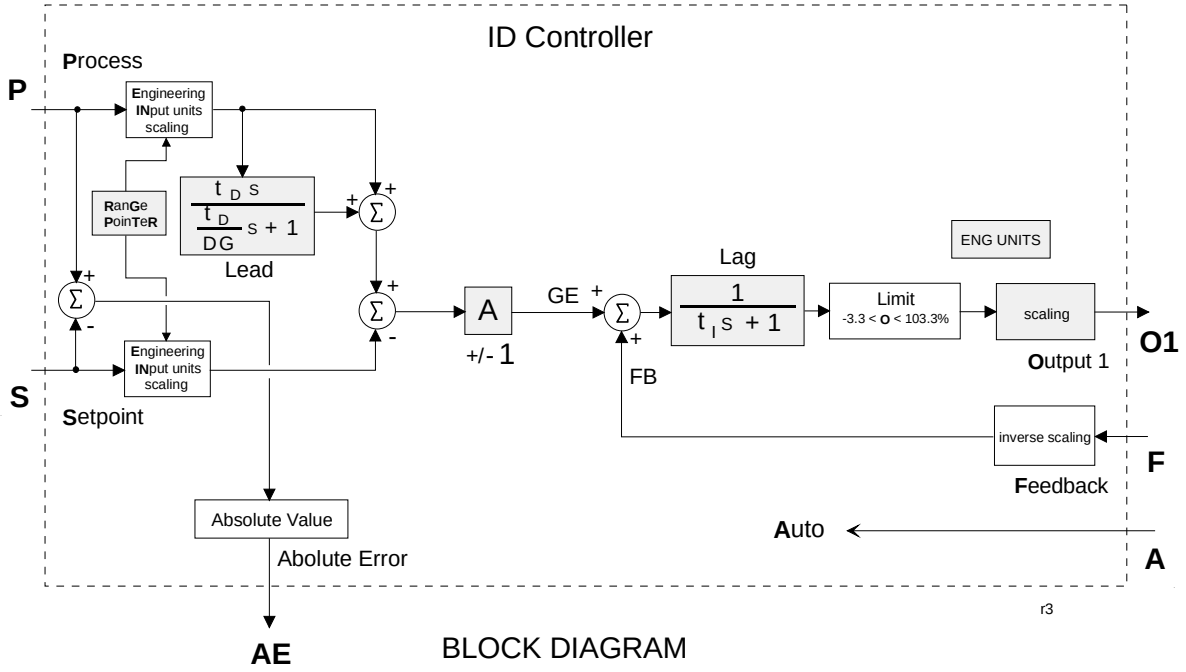

4.2.49 LL_ - Lead/Lag

LL_ function blocks provide both lead and lag functions. The block can function as lag only by setting the TLEAD time to 0.0. The lag function is always active and has a minimum setting of 0.01 minutes.

Input E asserted high (1) will enable the Lead/Lag function. When asserted low (0), the Lead/Lag function will be bypassed and the output will be set equal to the input. If input E is not configured, the block will be enabled.

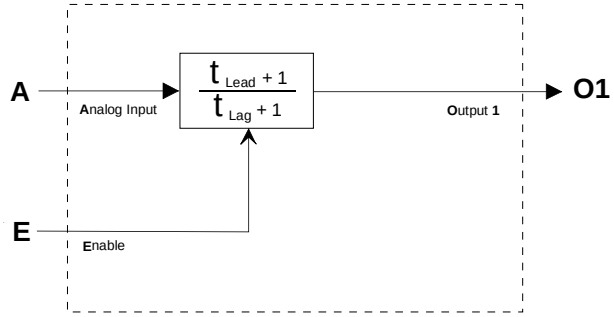

BLOCK DIAGRAM

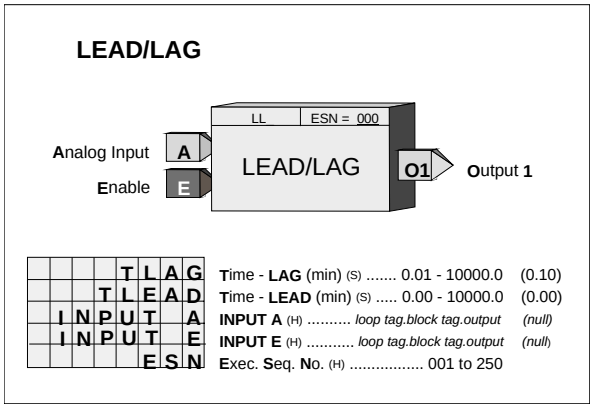

POWER UP - During a warm or cold start, the dynamic elements and the output will be initialized to the value of the current input on the first scan.

4.2.50 LMT_ - Limit

LMT_ function blocks are used to limit a real signal. Input A will normally pass through the function block to the output O1. If the input exceeds one of the limits, the block will output the limit value.

If the HI LIMIT is set lower than the LO LIMIT, the block will output the high limit value. The output statuses will be high (1) when the block is in a limit condition.

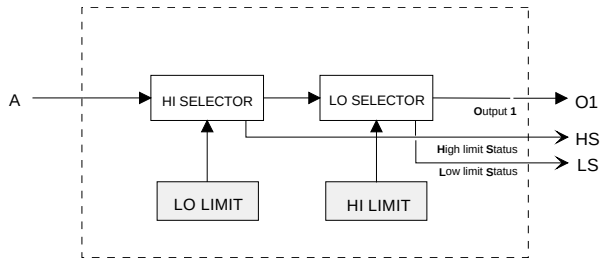

BLOCK DIAGRAM

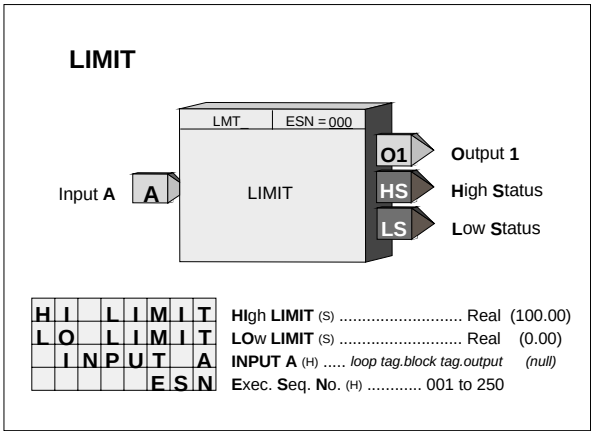

4.2.51 LN_ - NATURAL LOGARITHM

LN_ function blocks, in firmware 1.30 and higher, will output the natural logarithm of input X. When the input is <= 0.0, the input will be treated as the smallest number greater than 0.0 (i.e. 1.17....e-38) and the LN will be computed accordingly.

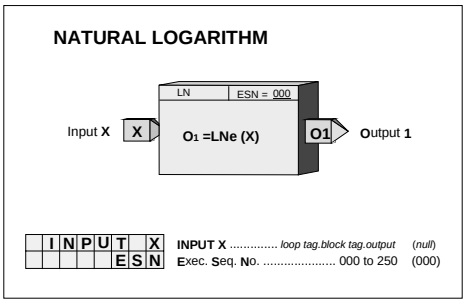

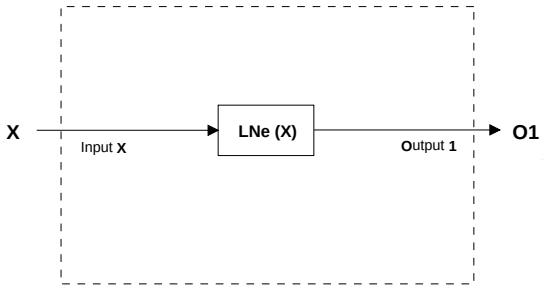

BLOCK DIAGRAM

4.2.52 LOG_ - LOGARITHM BASE 10

LOG__ function blocks, in firmware 1.30 and higher, will output the logarithm to the base 10 of input X. When the input is <= 0.0, the input will be treated as the smallest number greater than 0.0 (i.e. 1.17....e-38) and the LOG will be computed accordingly

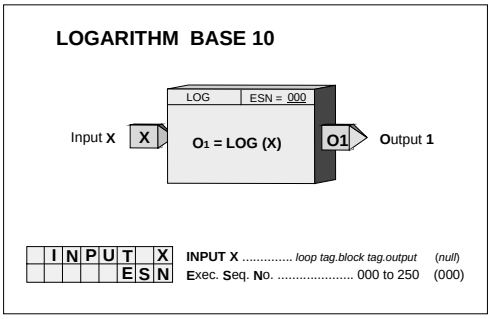

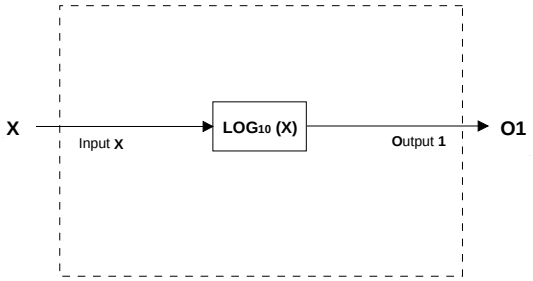

BLOCK DIAGRAM

4.2.53 MTH_ - Math

MTH_ function blocks provide universal arithmetic capability. As shown in the block diagram, each input has gain and bias scaling. The resulting signals are then applied to configurable math operations (DIV, MUL, ADD and SUB). Operation A will be performed first on inputs A and B. Operation B will be performed next on the resultant and input C.

Unused inputs to a MUL or DIV operation will be set to 1.0 and those to an ADD or SUB operation will be set equal to 0.0. The operation of those inputs will function normally so it is important to insure that the bias and gain settings are set properly.

In a DIV operation, when a divisor is 0.0 the output will go to the maximum Real number with the sign determined by the numerator. If the numerator is 0 the output will be 0.

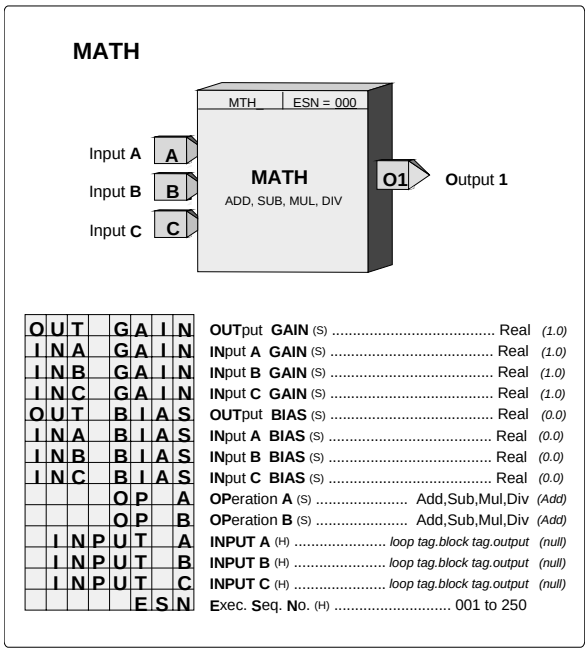

OUT GAIN	OUTput GAIN (S)	Real (1.0)
INA GAIN	INput A GAIN (S)	Real (1.0)
INB GAIN	INput B GAIN (S)	Real (1.0)
INC GAIN	INput C GAIN (S)	Real (1.0)
OUT BIAS	OUTput BIAS (S)	Real (0.0)
INA BIAS	INput A BIAS (S)	Real (0.0)
INB BIAS	INput B BIAS (S)	Real (0.0)
INC BIAS	INput C BIAS (S)	Real (0.0)
OP A	OPeration A (S)	Add,Sub,Mul,Div (Add)
OP B	OPeration B (S)	Add,Sub,Mul,Div (Add)
INPUT A	INPUT A (H)	loop tag.block tag.output (null)
INPUT B	INPUT B (H)	loop tag.block tag.output (null)
INPUT C	INPUT C (H)	loop tag.block tag.output (null)
ESN	Exec. Seq. No. (H)	001 to 250

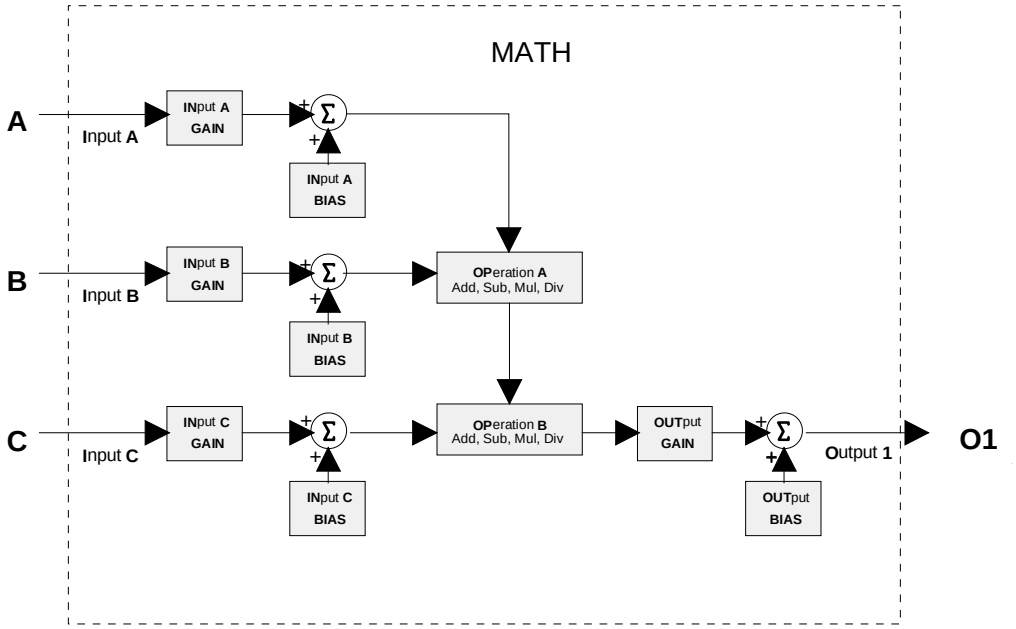

BLOCK DIAGRAM

4.2.54 MUL_ - Multiplication

MUL_ function blocks perform arithmetic multiplication on the three input signals. Any unused input will be set to 1.0 and will therefore have no affect on the output.

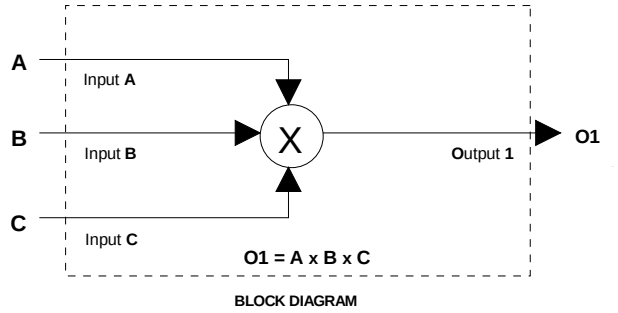

BLOCK DIAGRAM

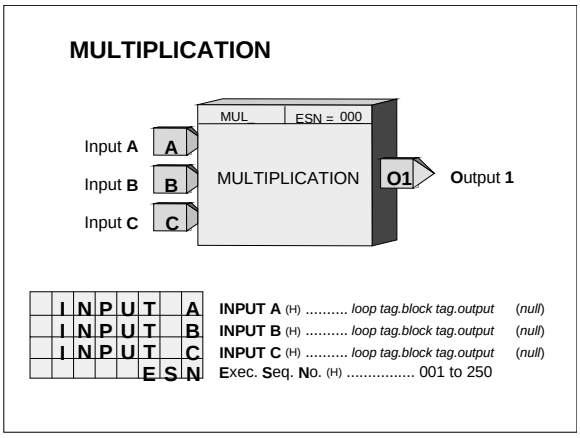

4.2.55 NND_ - NAND Logic

NND_ function blocks perform a logical NAND on the three inputs. Any unused input will be set high (1).

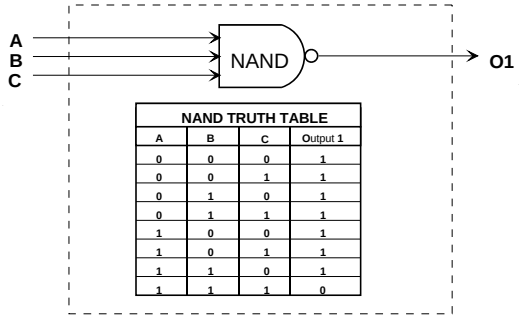

NAND TRUTH TABLE

A	B	C	Output 1
0	0	0	1
0	0	1	1
0	1	0	1
0	1	1	1
1	0	0	1
1	0	1	1
1	1	0	1
1	1	1	0

BLOCK DIAGRAM

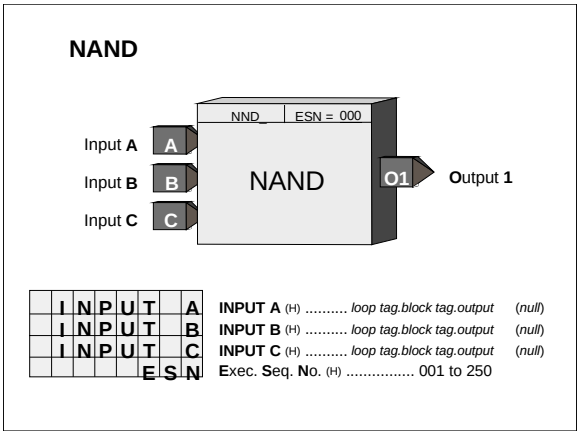

4.2.56 NOR_ - NOR Logic

NOR_ function blocks perform a logical NOR on the three inputs. Any unused input will be set low (0).

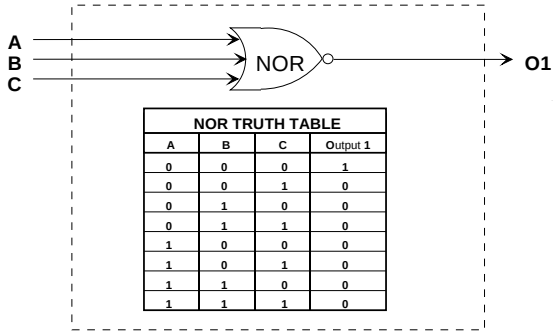

NOR TRUTH TABLE			
A	B	C	Output 1
0	0	0	1
0	0	1	0
0	1	0	0
0	1	1	0
1	0	0	0
1	0	1	0
1	1	0	0
1	1	1	0

BLOCK DIAGRAM

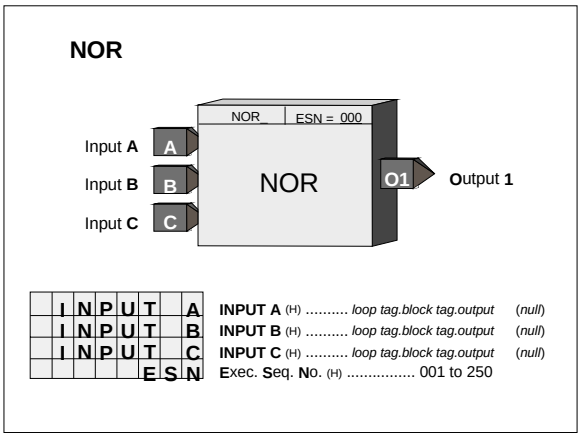

4.2.57 NOT_ - NOT Logic

NOT_ function blocks perform a logical NOT on input A. Any unused input will be set low (0).

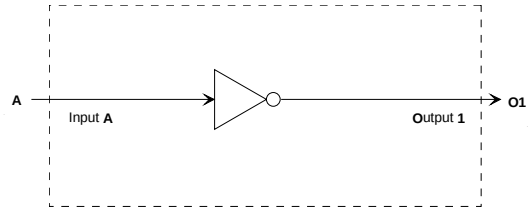

BLOCK DIAGRAM

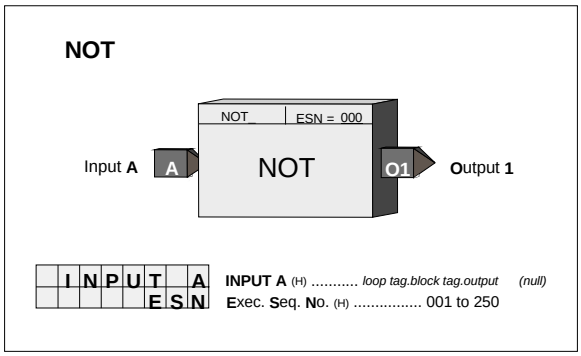

4.2.58 ODA - Operator Display for Analog Indication & Alarming (V2.2)

ODA function blocks are one of five operator displays that can be used on a one per loop basis to configure the local operator display functions as well as network parameters. For an example, see the i|ware faceplate on following page.

This block displays up to four Process variables, P1 to P4, in both analog bargraph and digital form. Two alarms are associated with each process variable and they can be configured as HI or LO alarms. Each alarm function has associated block outputs that are high (1) when the alarm is active. Output LE is high (1) when a loop event is active. Output SE is high when a station error is active. The LOOP # parameters are used to index reads and writes to Modbus and LIL network parameters. See Section 6 Network Communications for information on network parameters.

The VIEW OD parameter, when set to YES, enables the operator display to be viewed and accessed locally. Set the parameter to NO when it is desired to view display or operation parameters only from a network workstation.

Range pointers (i.e. R1 to R4) for all four process inputs must be configured to define the range of each of the variable inputs (i.e. P1 to P4). If these parameters are not configured, the bargraphs will be scaled using the engineering range of 0.00 to 100.00. This information also defines the scaling of loop information provided to a remote workstation over a. Modbus or LIL network.

Each process variable can be displayed on the local faceplate using the D button. When first stepping into a loop using the Loop button, the loop tag will be displayed (e.g. AnDisp1). However, if there is a point within the loop that has an unacknowledged alarm, that point will be displayed alternating between the point tag and the alarm condition (e.g. PI693/3B LO). Press the D button to scroll through the analog points displaying the point tag (e.g. TI712) in the alphanumeric display and the value of the point in the digital display (e.g. 348.47). Press the UNITS button to display the units of the point. Press the Loop button to display the loop tag.

Alarm Types

HI compares the process input with the limit setting and trips the alarm status high (1) when the process is equal to or higher than the limit setting. The alarm status will clear (0) when the process is less than the limit setting minus the deadband.

LO compares the process input with the limit setting and trips the alarm status high (1) when the process is equal to or less than the limit setting. The alarm status will clear (0) when the process is greater than the limit setting plus the deadband.

OR compares the process input with the range limits referenced by the range pointer parameter. It will trip the alarm status high (1) when the process is equal to or greater than the high limit, or equal to or less than the low limit. The alarm status will clear (0) when the process is less than the high limit minus the deadband or greater than the low limit plus the deadband.

Operator Display for Analog indication & alarming

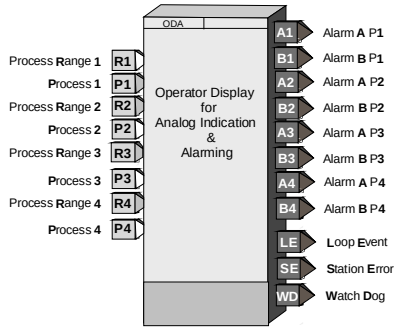

| | | |

Alarms have priorities 1 to 5, with 1 the highest. Alarms are reported to the operator faceplate in order of priority first and then in order of occurrence. Priority 1 causes the station bargraphs and condition (e.g. A1 HI) to flash and requires acknowledgment to stop flashing. Priority 2 also flashes the bargraphs and condition but stops flashing when the alarm clears (i.e. Self Clearing). Priority 3 causes the event LEDs (L and S) and condition to flash. Flashing stops only when the alarm is acknowledged. Priority 4 also causes the event LEDs and condition to flash but stops when the alarm clears. Priority 5 displays the alarm but does not require that it be acknowledged.

Alarm limits are in engineering units. A quickset ALARM feature is also available allowing alarm limits to be set quickly during operation. The settings are in engineering units but will also be displayed in % of range on the setpoint bargraph when viewing a point. Alarms are displayed as defined by the range pointer parameter. Alarms can be set to any engineering value within -10% to 110% of the range defined by the pointer. If a range is changed, the current alarm settings will be changed to be the same % within the new range. For example, if a HI alarm is currently set at 100.0 with a range of 0.0 to 100.0 and the range is changed to 300.0 to 400.0, the HI alarm will be moved to 400.0.

Each alarm can be enabled or disabled when in the quickset ALARM mode. The configuration allows an alarm to be enabled or disabled on a cold start. When an alarm is disabled it will not operate but will retain settings for return to the enabled mode. Complete operator faceplate functions, relating to alarms, are described in the i|station or local faceplate section. All alarms have the following features:

Deadband - requires that the signal either drop below or exceed the limit setting by the amount of the deadband before the alarm clears (goes low). The alarm deadband is set as a fixed % of the range pointer scale.

Delay-In Time - requires that the input remain above (or below) the limit setting for the delay time before the alarm trips (goes high). This can help prevent nuisance alarms that may trip on process noise.

Delay-Out Time - requires that the input remain below (or above) the limit setting plus deadband for the delay time before the alarm will clear (goes low). This can help prevent inadvertent clearing of alarms due to process noise.

Ringback - causes a previously acknowledged alarm to require acknowledging (priorities 1-4) when the alarm clears.

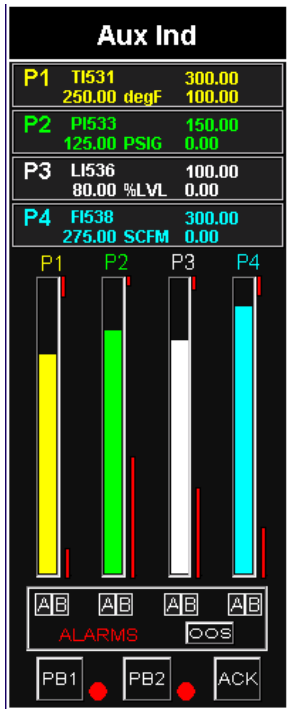

i\ware Faceplate Display

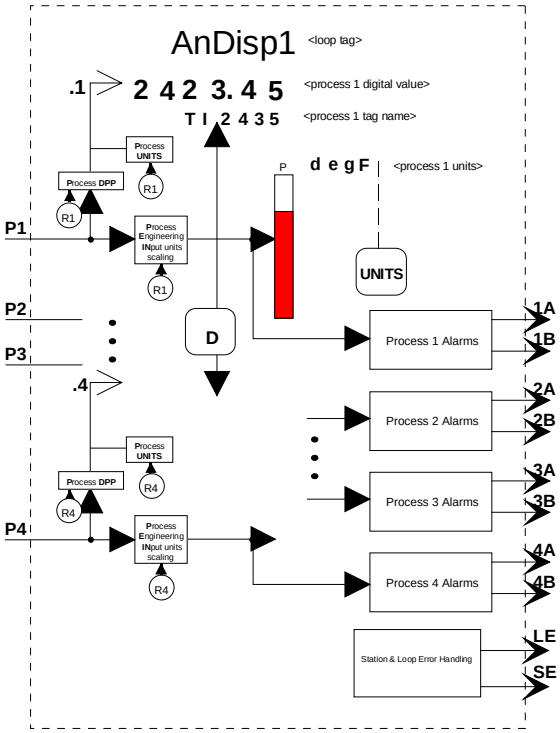

BLOCK DIAGRAM

4.2.59 ODC - Operator Display for Controllers

ODC function blocks are one of five operator displays that can be used on a one per loop basis to configure the local operator display functions as well as network parameters from a remote operator workstation associated with the loop. See the i|ware faceplate example, on the following page, that is created by configuration of the ODC function block.

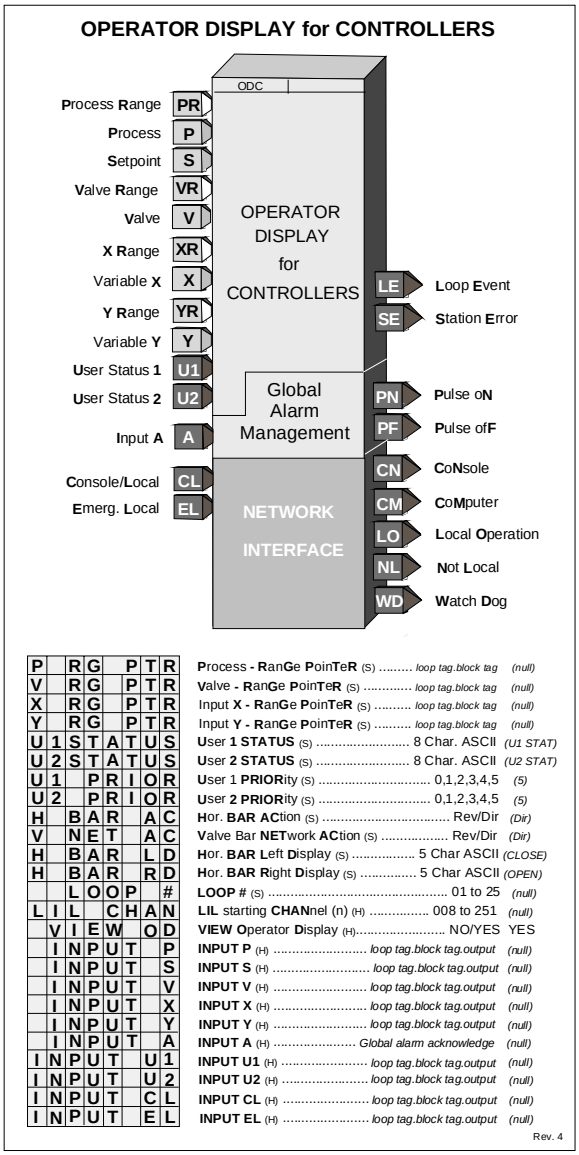

P		R	G		P	T	R	Process - RanGe PoinTeR (S)	loop tag.block tag (null)
V		R	G		P	T	R	Valve - RanGe PoinTeR (S)	loop tag.block tag (null)
X		R	G		P	T	R	Input X - RanGe PoinTeR (S)	loop tag.block tag (null)
Y		R	G		P	T	R	Input Y - RanGe PoinTeR (S)	loop tag.block tag (null)
U	1	S	T	A	T	U	S	User 1 STATUS (S)	8 Char. ASCII (U1 STAT)
U	2	S	T	A	T	U	S	User 2 STATUS (S)	8 Char. ASCII (U2 STAT)
U	1		P	R	I	O	R	User 1 PRIORity (S)	0,1,2,3,4,5 (5)
U	2		P	R	I	O	R	User 2 PRIORity (S)	0,1,2,3,4,5 (5)
H		B	A	R		A	C	Hor. BAR ACtion (S)	Rev/Dir (Dir)
V		N	E	T		A	C	Valve Bar NETwork ACtion (S)	Rev/Dir (Dir)
H		B	A	R		L	D	Hor. BAR Left Display (S)	5 Char ASCII (CLOSE)
H		B	A	R		R	D	Hor. BAR Right Display (S)	5 Char ASCII (OPEN)
		L	O	O	P		#	LOOP # (S)	01 to 25 (null)
L	I	L		C	H	A	N	LIL starting CHANnel (n) (H)	008 to 251 (null)
	V	I	E	W		O	D	VIEW Operator Display (H)	NO/YES YES
	I	N	P	U	T		P	INPUT P (H)	loop tag.block tag.output (null)
	I	N	P	U	T		S	INPUT S (H)	loop tag.block tag.output (null)
	I	N	P	U	T		V	INPUT V (H)	loop tag.block tag.output (null)
	I	N	P	U	T		X	INPUT X (H)	loop tag.block tag.output (null)
	I	N	P	U	T		Y	INPUT Y (H)	loop tag.block tag.output (null)
	I	N	P	U	T		A	INPUT A (H)	Global alarm acknowledge (null)
I	N	P	U	T		U	1	INPUT U1 (H)	loop tag.block tag.output (null)
I	N	P	U	T		U	2	INPUT U2 (H)	loop tag.block tag.output (null)
I	N	P	U	T		C	L	INPUT CL (H)	loop tag.block tag.output (null)
I	N	P	U	T		E	L	INPUT EL (H)	loop tag.block tag.output (null)

Rev. 4

The following three enhancements are in firmware 1.30 and higher.

1. A new parameter, VIEW OD, when set to YES, the default setting, enables the operator display to be viewed and accessed locally using the LOOP button. In some cases it may be desired to view only display or operation parameters with a network workstation and not allow operation or viewing of the control loop from the local display. In this case the parameter should be set to NO.
2. Output LE is high (1) when a loop event is active. Output SE is high when a station error is active.
3. The LOOP # is used to index reads and writes to Modbus parameters. The LIL has 25 parameters: C1S, C2S, C3S, ... C25S. When an ODC block has been selected and the LOOP # has been configured, the corresponding C#S LIL parameter will contain the LIL starting Chan (n) location. The LOOP# must be entered to enable either LIL or Modbus communications. (In version 1.21 firmware, this parameter was MB INDEX and it had the same function.)

Range pointers for both the process/setpoint and valve bargraphs must be configured to define the range of the variable inputs to P, S, and V. If these parameters are not configured, the bargraphs will be scaled using the engineering range of 0.00 to 100.00. The range pointer for X and Y define the displayed decimal point position and the units code. This information also defines the scaling of the loop information provided to a remote workstation over the network (i.e. Modbus or LIL).

Input variables P, S, V, X, and Y are shown in the numeric display, using the engineering UNITS and the preferred DPP of the range pointer. The Total from the BATOT will also be displayed when configured within the BATOT block. If a value is greater than allowed by the DPP parameter, the decimal point will be shifted to allow the display to show the full number until it exceeds the maximum available digits, at which time it will indicate over range.

When input U1 or U2 goes high (1) the 8-character user status (U_STATUS) will be displayed as configured by the status priority (U_ PRIOR). A priority of 0 will disable that status function setting the bits in the status word to 0. See Section 11 Local Faceplate Operation for a description of display actions using priorities 1 to 5.

The horizontal bargraph can be selected as direct or reverse acting. This feature allows it to always indicate an OPEN valve when fully lit. The labels on the basic faceplate are fixed, but paste on labels can be used to change the indications. The V NET AC parameter allows the LxVI network parameter to be set for direct or reverse action. This enables the valve bar on the HMI to operate similar to the valve bar on the faceplate. The left and right bar labels should be set accordingly (e.g. Left = OPEN; Right = CLOSED).

An operator display must be configured in order to properly map controller loop data to network data. Loop network data is mapped into registers or coils when the standard Modbus interface is used and channels/parameters when the optional LIL interface has been added. Mappings for both Modbus and LIL are listed in the tables included in Section 6 Network Communications. The 'LOOP #' and 'LIL CHAN' parameters enable configuration of a loop index number (x) for Modbus data or a starting channel (n) for LIL loop data.

Input CL controls local arbitration of changes to loop data from the network. When input CL is not configured, the three status outputs LO (in 1.21 firmware this output was named L), CN, and CM will be set high (1) and changes can be made from a network command or the local faceplate. When CL is configured it can be changed locally from a pushbutton switch such as PB1SW output PS (configured as momentary) and will change from local to console or console/computer to local with each positive transition of the input. Also, when output LO goes high, output CN will also go high and CM will go low, indicating that the control source will change to Console whenever Local is disabled, either by a positive transition on input CL or from a network command. The Computer CM state can be set high using a network command. The NL output will normally be connected to the MD input of pushbutton block PB1SW to indicate the C/L switch position on the operator faceplate, a green LED for C and a red LED for LO.

Output WD will go high (1) when the controller fails to receive a Modbus network command within the watchdog time period. The watchdog time is set in the STATN (Station Parameters) function block.

Input A can be used to acknowledge all the alarms in all of the loops in a controller. Output PN (Pulse oN) will go high for 0.5 seconds (or one scan cycle whichever is longer) whenever the bargraph flashes. Bargraph flashing is controlled by the priority setting of alarms or events. Output PF (Pulse ofF) will go high for 0.5 sec when the flashing bargraph is stopped (e.g. pressing the ACK button).

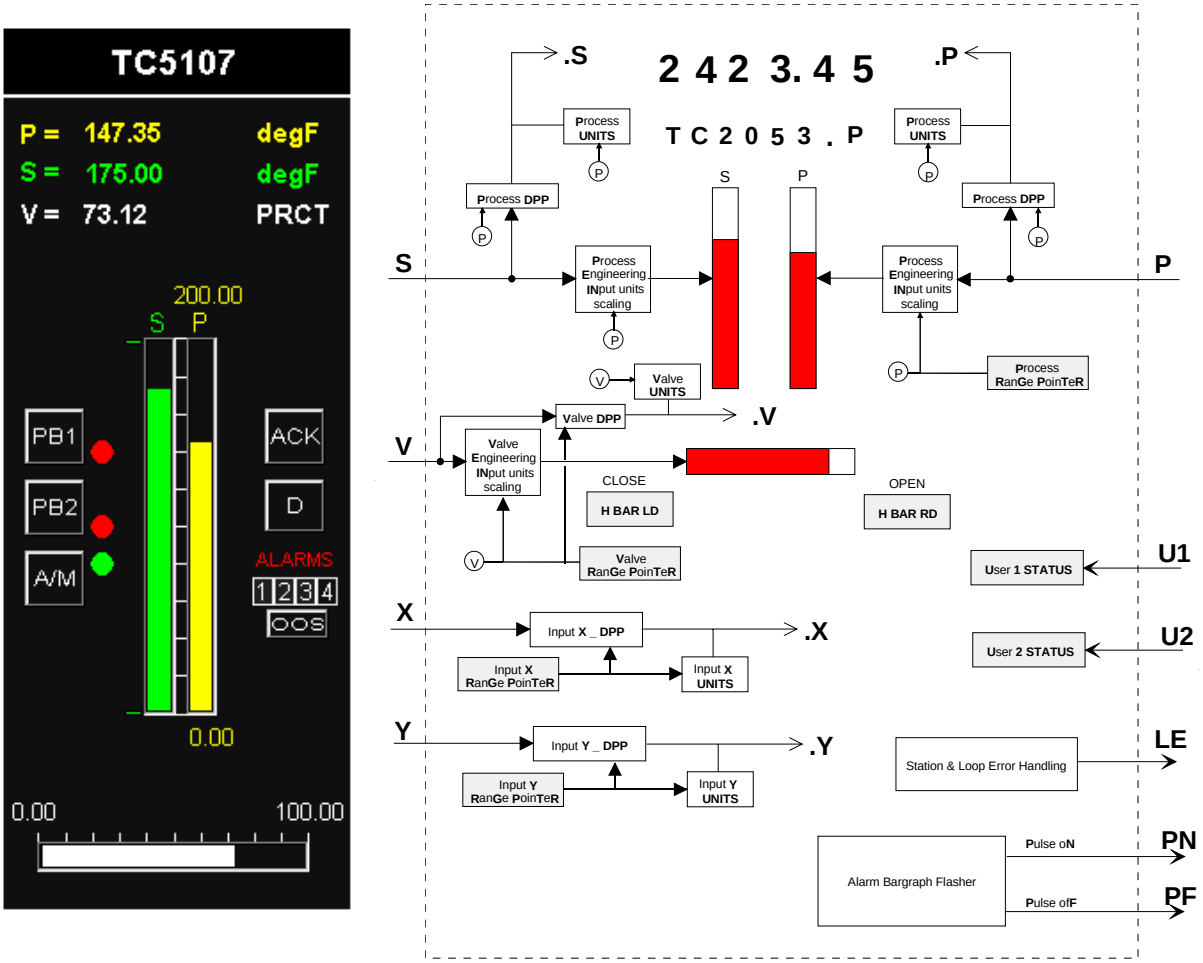

BLOCK DIAGRAM

4.2.60 ODD - Operator Display for Discrete Indication & Control (V2.2)

ODD function blocks are one of five operator displays that can be used on a one per loop basis to configure the local operator display functions as well as network parameters. See the i|ware faceplate example on the following page.

The ODD function block displays up to 16 discrete variables. Each input has a corresponding block output that is equal to the input when the variable mode is in Auto. Each input variable can be assigned a mode. The value of the output can be changed while in Man by using the pulser and pressing the ACK button. When a variable is switched to Man it will always equal the input value until changed.

The LOOP # parameter is used to index reads and writes to Modbus and LIL network parameters. When using the LIL, the LIL CHAN parameter must also be configured. See Section 6 Network Communications for more information on network parameters.

The VIEW OD parameter, when set to YES, enables the operator display to be viewed and accessed locally. Set the parameter to NO when it is desired to view display or operation parameters only from a network workstation.

During a cold or warm start, each input variable will power up in the auto mode. During a hot start, the mode and manual value will equal the value prior to power down.

Each discrete input variable can be displayed on the local faceplate using the D button. When first stepping into a loop using the Loop button, the loop tag will be displayed (e.g. DigDisp1). Press the D button to scroll through the discrete points. The point tag (e.g. SV-103) is shown in the alphanumeric display. The value of the input appears in the left 3 positions of the digital display (e.g. On) and the output in the right-most 3 positions (e.g. OFF).

The A/M button will display the point mode and enable switching the point between auto and manual using the A/M button. The manual value will change as the pulser is turned.

Operator Display for Discrete indication & control

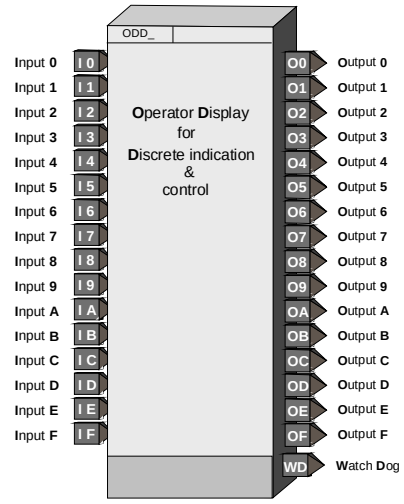

I0 TAG	Input 0 TAG (S)	6 ASCII Char (I0 TAG)
I1 TAG	Input 1 TAG (S)	6 ASCII Char (I1 TAG)
I2 TAG	Input 2 TAG (S)	6 ASCII Char (I2 TAG)
I3 TAG	Input 3 TAG (S)	6 ASCII Char (I3 TAG)
I4 TAG	Input 4 TAG (S)	6 ASCII Char (I4 TAG)
I5 TAG	Input 5 TAG (S)	6 ASCII Char (I5 TAG)
I6 TAG	Input 6 TAG (S)	6 ASCII Char (I6 TAG)
I7 TAG	Input 7 TAG (S)	6 ASCII Char (I7 TAG)
I8 TAG	Input 8 TAG (S)	6 ASCII Char (I8 TAG)
I9 TAG	Input 9 TAG (S)	6 ASCII Char (I9 TAG)
IA TAG	Input A TAG (S)	6 ASCII Char (IA TAG)
IB TAG	Input B TAG (S)	6 ASCII Char (IB TAG)
IC TAG	Input C TAG (S)	6 ASCII Char (IC TAG)
ID TAG	Input D TAG (S)	6 ASCII Char (ID TAG)
IE TAG	Input E TAG (S)	6 ASCII Char (IE TAG)
IFTAG	Input F TAG (S)	6 ASCII Char (IFTAG)
LOOP #	LOOP # (S)	01 to 25 (null)
LIL CHAN	LIL starting CHANnel (n) (H)	008 to 252 (null)
VIEW OD	VIEW Operator Display (H)	NO/YES YES
INPUT 0	INPUT 0 (H)	loop tag.block tag.output (null)
INPUT 1	INPUT 1 (H)	loop tag.block tag.output (null)
INPUT 2	INPUT 2 (H)	loop tag.block tag.output (null)
INPUT 3	INPUT 3 (H)	loop tag.block tag.output (null)
INPUT 4	INPUT 4 (H)	loop tag.block tag.output (null)
INPUT 5	INPUT 5 (H)	loop tag.block tag.output (null)
INPUT 6	INPUT 6 (H)	loop tag.block tag.output (null)
INPUT 7	INPUT 7 (H)	loop tag.block tag.output (null)
INPUT 8	INPUT 8 (H)	loop tag.block tag.output (null)
INPUT 9	INPUT 9 (H)	loop tag.block tag.output (null)
INPUT A	INPUT A (H)	loop tag.block tag.output (null)
INPUT B	INPUT B (H)	loop tag.block tag.output (null)
INPUT C	INPUT C (H)	loop tag.block tag.output (null)
INPUT D	INPUT D (H)	loop tag.block tag.output (null)
INPUT E	INPUT E (H)	loop tag.block tag.output (null)
INPUT F	INPUT F (H)	loop tag.block tag.output (null)

Rev. 2

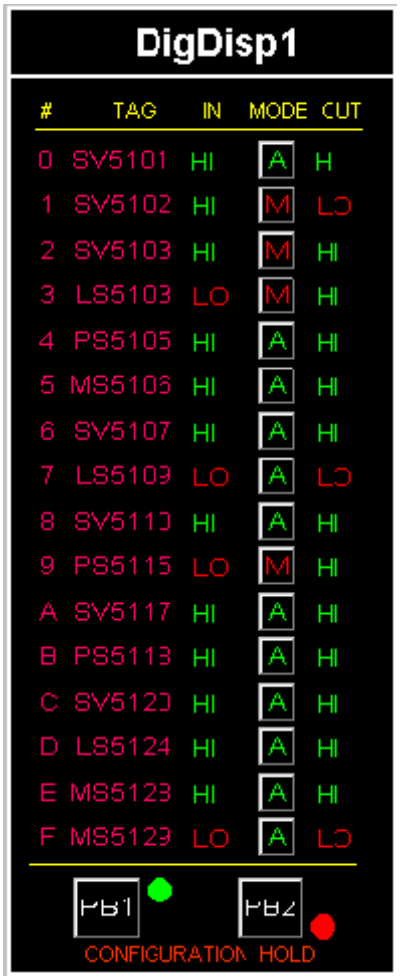

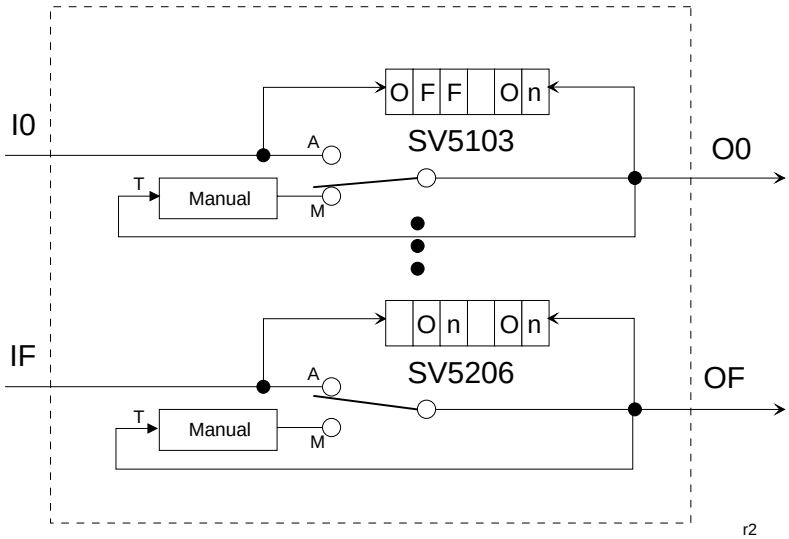

Block Diagram

4.2.61 ODP - Operator Display for Pushbuttons (V2.2)

ODP function blocks are one of five operator displays that can be used on a one per loop basis to configure local operator display functions as well as network parameters. See the i|ware faceplate example on following page.

The ODP function block can provide up to 8 groups of two pushbuttons and one selector switch. Each group includes:

- One normally open pushbutton, identified as PB1 on the local faceplate and as a 6-character tag to identify the button function on a HMI display.
- One normally closed pushbutton, identified as PB2 on the local faceplate and as a 6-character tag.
- One two-position selector switch identified as A/M on the local faceplate and as a 6-character identification tag for switch position for display on an HMI.

Each group also has a set of 6-character messages associated with the status of a feedback signal (1/0).

Each pushbutton has a configuration parameter that controls how long the button function will be held in the pressed condition. The default value is 1 second but can be set from 0.1 (or scan time if greater than 0.1) to 10 seconds.

The LOOP # parameter is used to index reads and writes to Modbus and LIL network parameters. When using the LIL, the LIL CHAN parameter must also be configured. See Appendix A for more information on network parameters.

The VIEW OD parameter, when set to YES enables the operator display to be viewed and accessed locally. In cases where it is desired to view display or operation parameters only from a network workstation, the parameter should be set to NO.

During a cold or warm start, the A/M switch will power up in the Auto position. During a hot start, the A/M switch will power up in the position prior to power down.

Operator Display for Pushbuttons

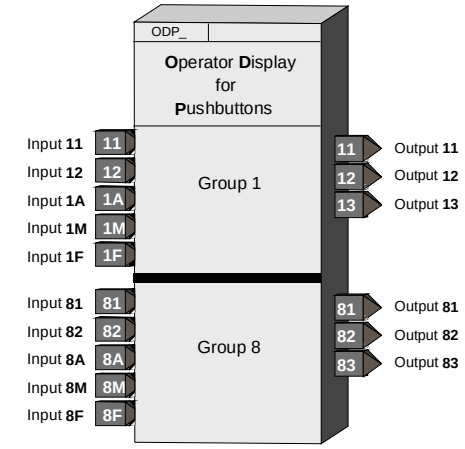

		G	1		T	A	G	Group 1 TAG (S)	6 ASCII Char (Group1)
G	1	P	1		T	A	G	Group 1 PB1 TAG (S)	6 ASCII Char (START)
G	1	P	1		H	I	T	Group 1 PB1 Hold In Time (S)	0.1 - 10 sec (1 sec)
G	1	P	2		T	A	G	Group 1 PB2 TAG (S)	6 ASCII Char (STOP)
G	1	P	2		H	I	T	Group 1 PB2 Hold In Time (S)	0.1 - 10 sec (1 sec)
G	1	S	A		T	A	G	Group 1 Switch Position A TAG (S)	6 ASCII Char (AUTO)
G	1	S	M		T	A	G	Group 1 Switch Position M TAG (S)	6 ASCII Char (MAN)
G	1	F	1		T	A	G	Group 1 Feedback 1 TAG (S)	6 ASCII Char (ON)
G	1	F	0		T	A	G	Group 1 Feedback 0 TAG (S)	6 ASCII Char (OFF)
		G	8		T	A	G	Group 8 TAG (S)	6 ASCII Char (Group8)
G	8	P	1		T	A	G	Group 8 PB1 TAG (S)	6 ASCII Char (START)
G	8	P	1		H	I	T	Group 8 PB1 Hold In Time (S)	0.1 - 10 sec (1 sec)
G	8	P	2		T	A	G	Group 8 PB2 TAG (S)	6 ASCII Char (STOP)
G	8	P	2		H	I	T	Group 8 PB2 Hold In Time (S)	0.1 - 10 sec (1 sec)
G	8	S	A		T	A	G	Group 8 Switch Position A TAG (S)	6 ASCII Char (AUTO)
G	8	S	M		T	A	G	Group 8 Switch Position M TAG (S)	6 ASCII Char (MAN)
G	8	F	1		T	A	G	Group 8 Feedback 1 TAG (S)	6 ASCII Char (ON)
G	8	F	0		T	A	G	Group 8 Feedback 0 TAG (S)	6 ASCII Char (OFF)
		L	O	O	P		#	LOOP # (S)	01 to 25 *(null)*
L	I	L		C	H	A	N	LIL starting CHANnel (n) (H)	008 to 254 *(null)*
	V	I	E	W		O	D	VIEW Operator Display (H)	NO/YES YES
I	N	P	U	T		1	1	INPUT 11 (H)	*loop tag.block tag.output (null)*
I	N	P	U	T		1	2	INPUT 12 (H)	*loop tag.block tag.output (null)*
I	N	P	U	T		1	A	INPUT 1A (H)	*loop tag.block tag.output (null)*
I	N	P	U	T		1	M	INPUT 1M (H)	*loop tag.block tag.output (null)*
I	N	P	U	T		1	F	INPUT 1F (H)	*loop tag.block tag.output (null)*
I	N	P	U	T		8	1	INPUT 81 (H)	*loop tag.block tag.output (null)*
I	N	P	U	T		8	2	INPUT 82 (H)	*loop tag.block tag.output (null)*
I	N	P	U	T		8	A	INPUT 8A (H)	*loop tag.block tag.output (null)*
I	N	P	U	T		8	M	INPUT 8M (H)	*loop tag.block tag.output (null)*
I	N	P	U	T		8	F	INPUT 8F (H)	*loop tag.block tag.output (null)*

Rev. 2

Each group can be displayed on the local faceplate using the D button. When first stepping into a loop using the Loop button, the loop tag will be displayed (e.g. PBDisp1). Pressing the D button will scroll through the groups displaying the group tag (e.g. MS1036) in the alphanumeric and the value of the feedback in the digital display (e.g. 1). The feedback message associated with this feedback value can be viewed on the local faceplate using the UNITS button. The A/M button will display the position of the group selector switch and enable switching the group selector switch between auto and manual.



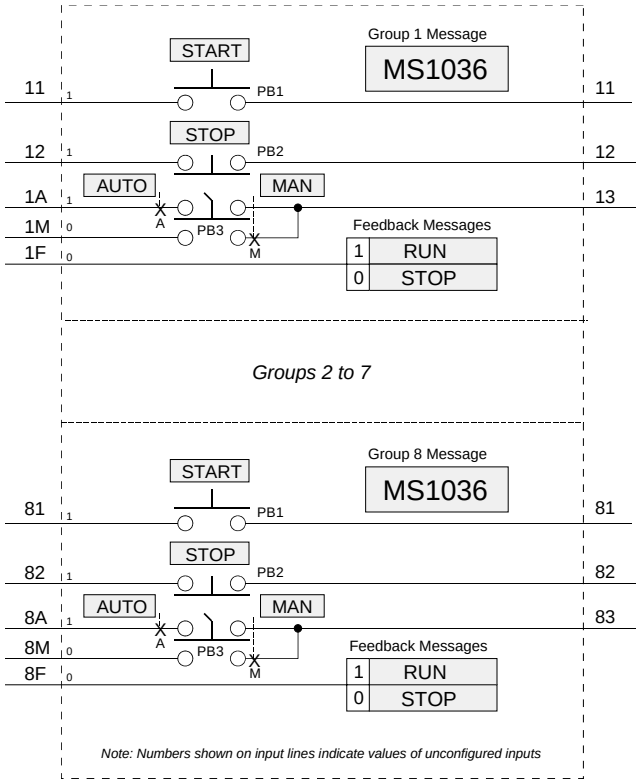

Block Diagram

4.2.62 ODS - Operator Display for Sequencer

ODS function blocks are one of five operator displays available on a one per loop basis to configure the local operator display functions as well as the network commands from an operator workstation associated with the loop. See the example of an i|ware faceplate, on the following page.

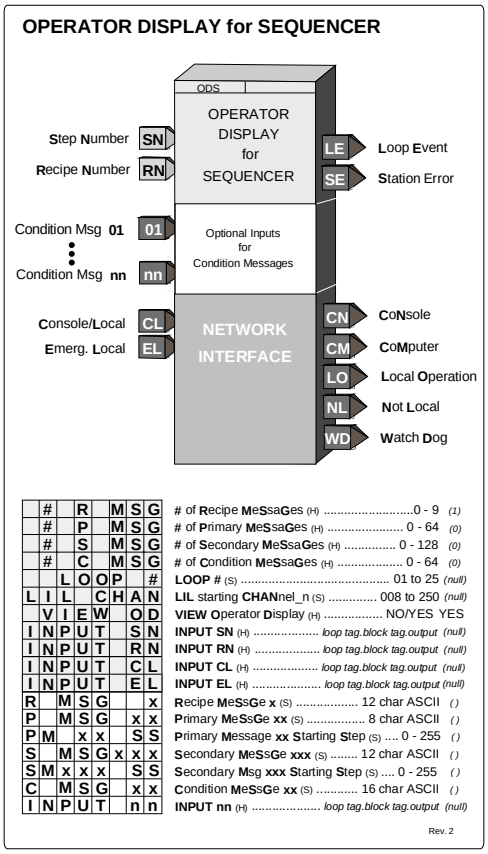

The following six enhancements are in firmware 1.30 and higher.

1. The VIEW OD parameter, when set to YES, the default value, enables the operator display to be viewed and accessed locally using the LOOP button. Set the parameter to NO to view the display or operation parameters only with a network workstation and not allow operation from the local display. This may be desired with a sequence/logic loop where local operation is not needed but a workstation needs access to force I/O or sequence parameters for recipe changes.
2. Messages will be available over Modbus or LIL. Refer to Sections 6 and 7 for mapped data points.
3. The # of Recipe messages can now be set to 0 so that a Recipe Message does not appear in the message list.
4. Messages will now function as follows with the local faceplate display:

   When the local display first enters a loop, the loop tag and sequence step number will be displayed. When the D button is pressed, the Numeric display will show MSG and the alphanumeric display will show the first message it comes to in the order shown below.

   - Conditional messages will be displayed in the order in which they occurred.
   - The latest message will be displayed first.
   - A new message will override the current message.

   The ACK button can be used to scroll through active messages. It will stay on the last message until a new message overrides it or the ACK button is again pressed. When an active message clears, the message display will loop back to the top and display the first message it comes to. Events that require acknowledgment will return the display to the normal mode (i.e. <loop tag>.S) and will flash the message. When events have been acknowledged they can be viewed using the ACK button. The display can be returned to the MSG mode using the D button and will then display the first message in the Queue.

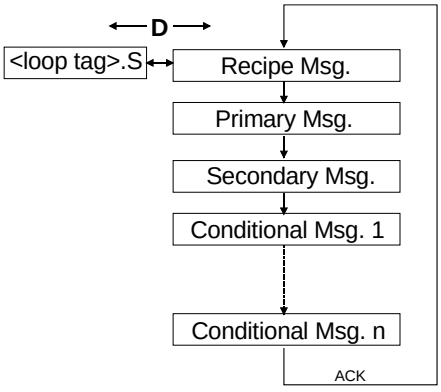

5. Output LE is high (1) when a loop event is active. Output SE is high when a station error is active.
6. The LOOP # (in version 1.21 firmware this parameter was MB INDEX but they have the same function) will be used to index reads and writes to Modbus parameters. Also, the LIL has 25 parameters: C1S through C25S. When an ODS block has been selected and the LOOP # has been configured, the corresponding C#S LIL parameter will contain the LIL starting Chan (n) location. The LOOP# must be entered to enable either LIL or Modbus communications.

An operator display must be configured in order to properly map station loop data to network data. Sequencer loop network data is mapped onto registers or coils when the standard Modbus interface is used and to channels/ parameters when the optional LIL interface has been added. Mappings for both Modbus and LIL are listed in tables in Section 6 Network Communications.

Input CL controls local arbitration of changes to loop data from the network. When input CL is not configured, the three status outputs LO (in 1.21 firmware this output was named L), CN, and CM will be set high (1) and changes can be made from a network command or the local faceplate. When CL is configured, it can be toggled locally from a pushbutton switch, such as PB1SW (output PS), and will change from local to console or from console/computer to local each time the input is toggled. Also, when output LO goes high, output CN will also go high and CM will go low, indicating that the control source will change to Console whenever Local is disabled, either by toggling input CL or from a network command. The Computer CM state can be set high using a network command. The NL output will normally be connected to the MD input of the pushbutton block PB1SW to indicate the C/L switch position on the operator faceplate using the green LED for C and the red LED for LO.

Output WD will go high (1) when the station fails to receive a Modbus network command within the watchdog time period. The watchdog time is set in the STATN (Station Parameters) function block.

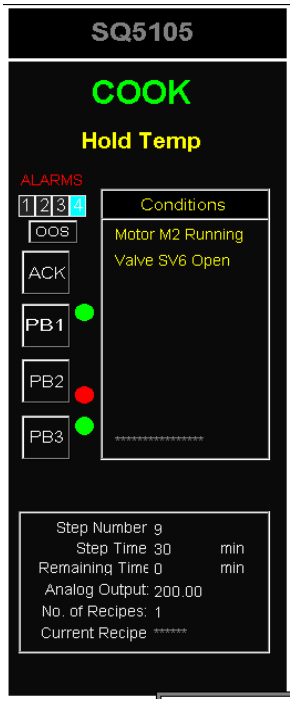

i|ware HMI Faceplate

4.2.63 ON/OFF - On/Off Controller

ON/OFF is an on/off controller with deviation function. It is one of five controller types that can be used on a one per loop basis.

When P-S (Process - Setpoint) reaches the HDEV limit, the Boolean output HO will go high (1) and when S-P (Setpoint - Process) reaches the LDEV limit, the output LO will go high (1). When the deviation drops to less than the DEADBAND setting, the outputs will go low (0). Derivative action is added to the process variable when the TD parameter is other than 0.0.

When single ended action (gap action) is desired, set the DEADBAND equal to the gap and the HDEV parameter for half the gap. For example, if DEADBAND = 20.0, set HDEV to 10. If the setpoint S is 50.0, output HO will go high (1) when P equals 60.0 and HO will go low (0) when P equals 40.0.

Input E asserted high (1) will enable the block outputs; when low (0) all outputs will be set low (0).

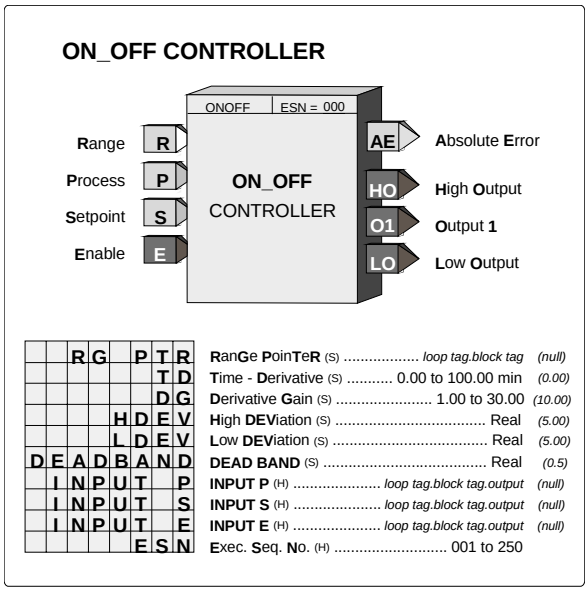

| | | |

4.2.64 OR_ - OR Logic

OR_ function blocks perform a logical OR on the three inputs. Any unused input will be set low (0).

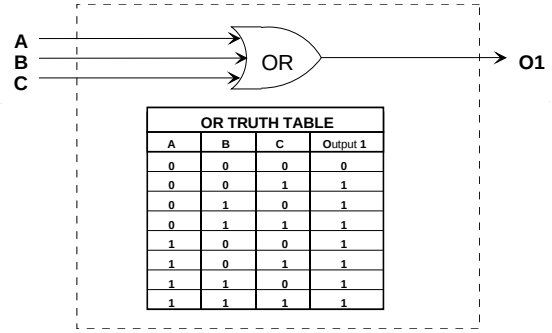

OR TRUTH TABLE			
A	B	C	Output 1
0	0	0	0
0	0	1	1
0	1	0	1
0	1	1	1
1	0	0	1
1	0	1	1
1	1	0	1
1	1	1	1

BLOCK DIAGRAM

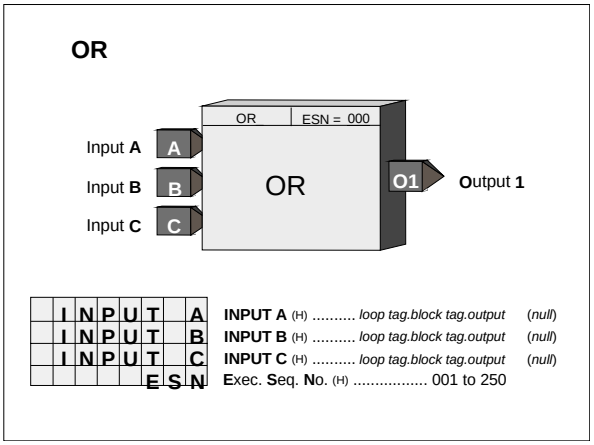

4.2.65 ORSL - Override Selector

ORSL function blocks are used on a one per loop basis and enable a primary input signal, such as the output from a controller, to be overridden by other signals. For a selector configured as LO, the function block outputs the lower of the primary or override inputs. For a selector configured as HI, the function block will output the higher of the primary or override inputs. Override signals can be hard limits, coming from HOLD blocks, or signals coming from other controllers. Block override inputs 1 and 2 can be used as HI or LO selector functions. Additional override inputs can be accommodated by connecting these inputs to signal selector (SEL) blocks.

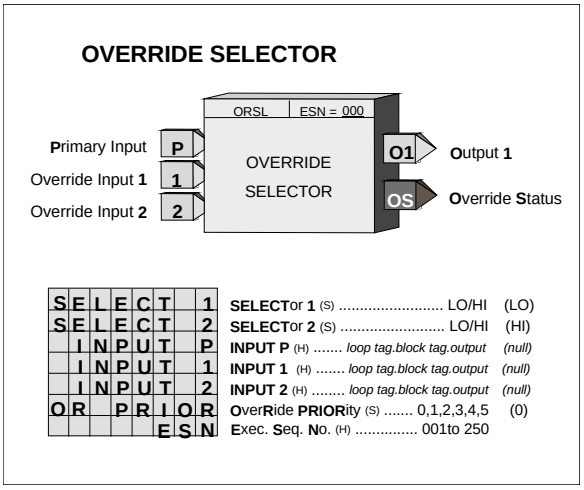

When the output of the ORSL block is not the primary input, the output OS will be high (1). In addition, the block can cause the operator faceplate to display 'OVERRIDE' status when a priority level higher than 0, the default, has been selected.

If an override input is not configured the individual selector will output the other input. When no inputs are configured, the block will output 0.0 and the OS status will be set low (0).

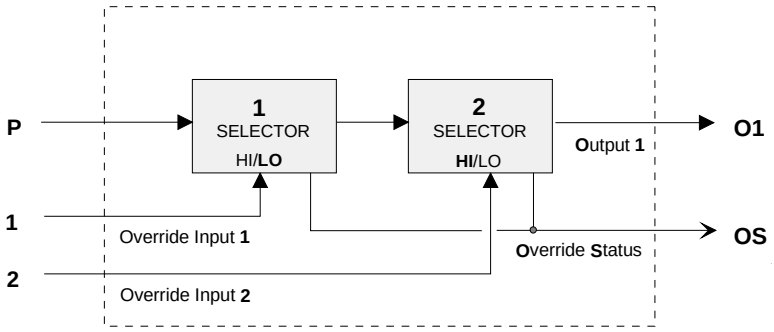

BLOCK DIAGRAM

4.2.66 OST_ - One Shot Timer

OST_ function blocks provide a high (1) output for a predetermined time, set by ON TIME, when input P goes high (1). If input P goes low (0) the output will remain high until the time expires. If input P goes high during the on time, the elapsed timer will be re-triggered if RETRIG is set to YES.

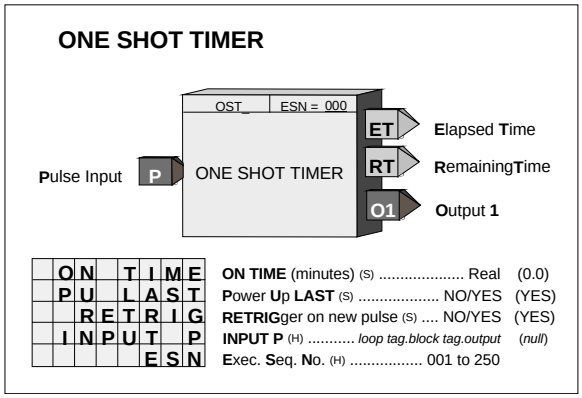

With firmware1.30 and higher the ON TIME is adjustable over the full range of the display which is 0.00000 to 999999. In earlier versions the minimum time setting was 0.1. If the delay time is set to less than the scan time of the station the delay time will equal the scan time.

Output ET (elapsed time) will ramp from 0.0 to the value of ON TIME and remain there until P goes low (0). Output RT (remaining time) equals ON TIME - ET.

POWER UP - During a warm start, when PU LAST is set to YES, the block will initialize at the input/output states and elapsed time in effect at the instant power down occurred. A cold start will initialize the input/output states and elapsed time to 0.

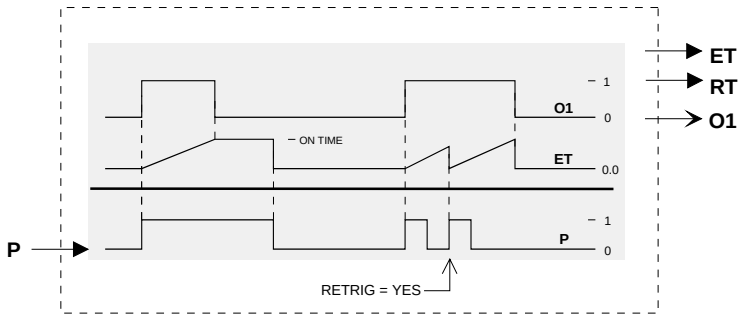

BLOCK DIAGRAM

4.2.67 PB1SW - PB1 Switch

PB1SW is one of three general purpose switches available in each loop. It can be utilized for switching Boolean signals in such applications as: toggling Console/Local operation of the ODC or ODS function blocks, Start/Stop, controlling the position of a TSW (Transfer Switch) function block for switching analog signals, or other operator initiated actions.

PB1SW can be configured for momentary or sustained operation. As momentary, the switch will transfer to the NO position when the button is pressed and will return when released. Momentary action is used in toggle applications such as changing the function of the ODC or ODS function blocks. In the sustained mode, the switch will alternate positions each time the button is pressed. An unconfigured NC input defaults to 0 and an unconfigured NO input to 1. With firmware 1.30 and higher, the button can be remotely activated through a command over Modbus or LIL.

PB1 SWITCH

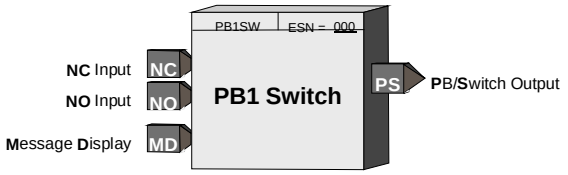

		A	C	T	I	O	N	Switch **ACTION** (S) ..... MOM/SUS (MOM)
	P	U		L	A	S	T	**P**ower **U**p **LAST** (S) ..... NO/YES (YES)
M	D		H	I		S	T	**MD HI ST**atus message (S) .. 5 ASCII Char (GREEN)
M	D		L	O		S	T	**MD LO ST**atus message (S) . 5 ASCII Char (RED)
M	D		H	I		A	C	**MD HI AC**tion message (S) ... 5 ASCII Char (RED)
M	D		L	O		A	C	**MD LO AC**tion message (S) . 5 ASCII Char (GREEN)
I	N	P	U	T		N	C	**INPUT NO** (H) ..... *loop tag.block tag.output* *(null)*
I	N	P	U	T		N	O	**INPUT NC** (H) ..... *loop tag.block tag.output* *(null)*
I	N	P	U	T		M	D	**INPUT MD** (H) ..... *loop tag.block tag.output* *(null)*
					E	S	N	**E**xec. **S**eq. **N**o. (H) ..... 001 to 250

This block operates with an operator faceplate that includes green and red LEDs that are turned on using input MD. A HI (1) input will turn on the Green LED and a LO the Red LED. The default connection will be the PS output of the block but should be changed as required to display the correct status. The message parameters do not apply to the current product.

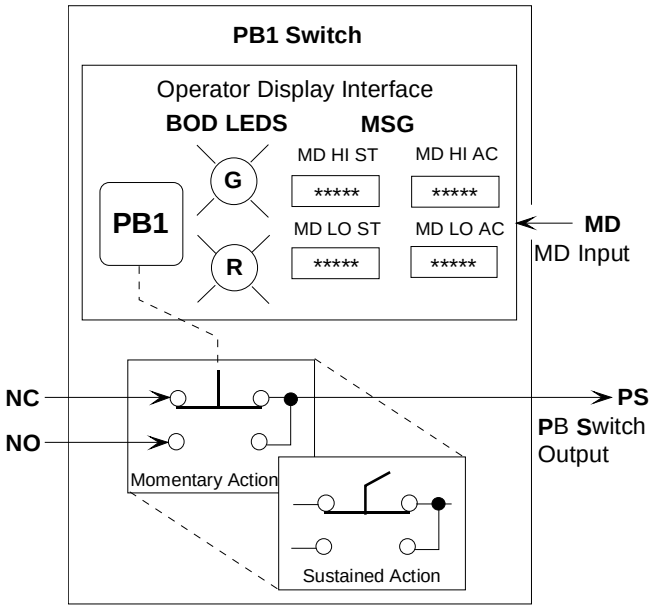

BOD - Basic Operator Display
MD - Message Display

BLOCK DIAGRAM

POWER UP - When the switch is configured for momentary action, it will always power up in the NC position. For sustained action, with the POWER UP parameter set to YES, the switch will power up in the last position during a hot or warm start, and during a cold start will power up in the NC position. When the POWER UP parameter is set to NO, the switch will power up in the last position during a hot start. During a warm or cold start, it will power up in the NC position.

4.2.68 PB2SW - PB2 Switch

PB2SW is one of three general purpose switches available in each loop. It can be utilized for switching Boolean signals in such applications as: toggling the EITS (External/Internal setpoint Transfer Switch) function block, Start/Stop, controlling the position of a TSW (Transfer Switch) function block for switching analog signals, or other operator initiated actions.

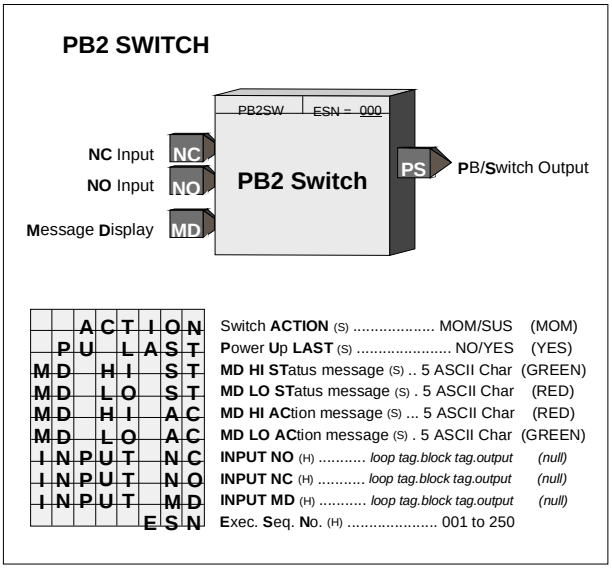

The switch can be configured for momentary or sustained operation. As momentary, the switch will transfer to the NO position when the button is pressed and will return when released. Momentary action is used in toggle applications such as changing the function of the EITS function block. In the sustained mode, the switch will alternate positions each time the button is pressed. An unconfigured NC input defaults to 0 and an unconfigured NO input to 1. With firmware 1.30 and higher, the button can be remotely activated through a command over Modbus or LIL.

This block operates with an operator faceplate that includes green and red LEDs that are turned on using input MD. A HI (1) input will turn on the Green LED and a LO the Red LED. The default connection will be the PS output of the block but should be changed as required to display the correct status. The message parameters do not apply to the current product.

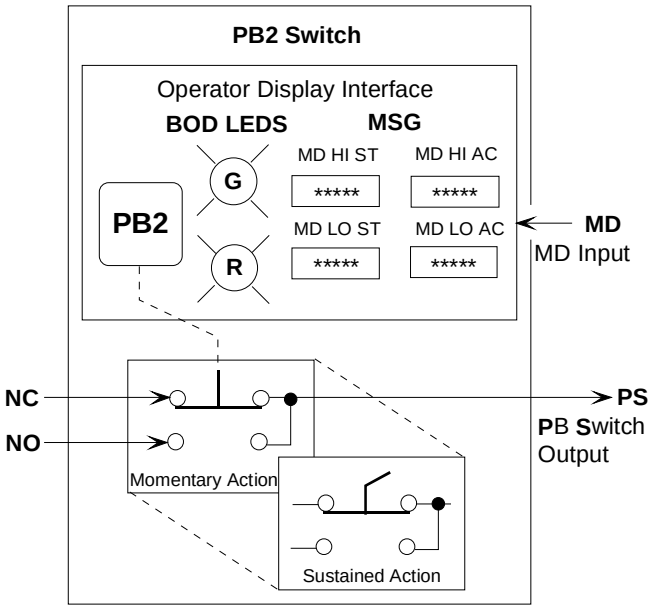

BLOCK DIAGRAM

POWER UP - When the switch is configured for momentary action, it will always power up in the NC position. For sustained action, with the POWER UP parameter set to YES, the switch will power up in the last position during a hot or warm start, and during a cold start will power up in the NC position. When the POWER UP parameter is set to NO, the switch will power up in the last position during a hot start. During a warm or cold start, it will power up in the NC position.

4.2.69 PB3SW - PB3 Switch

PB3SW is one of three general purpose switches, available in each loop. It can be utilized for switching Boolean signals in such applications as: Start/Stop, controlling the position of a TSW (Transfer Switch) function block for switching analog signals, or other operator initiated actions. PB3SW can be operated only from the front panel when the A/M function block has not been configured.

PB3SW can be configured for momentary or sustained operation. As momentary, the switch will transfer to the NO position when the button is pressed and will return when released. In the sustained mode, the switch will alternate positions each time the button is pressed. An unconfigured NC input defaults to 0 and an unconfigured NO input to 1. With firmware 1.30 and higher, the button can be remotely activated through a command over Modbus or LIL.

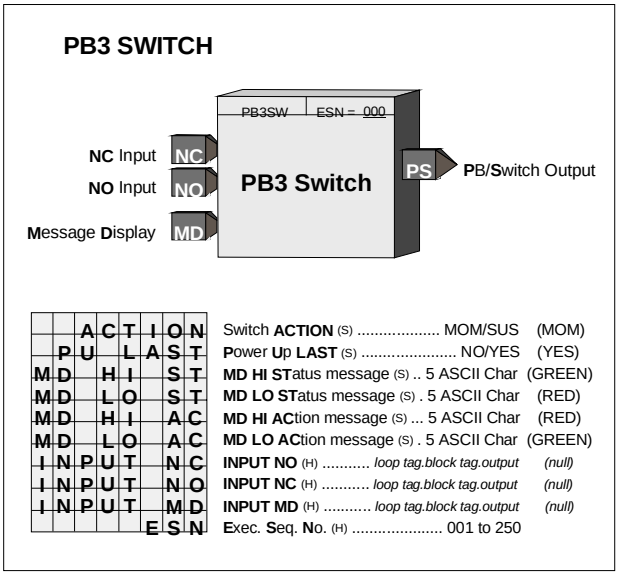

This block operates with an operator faceplate that includes green and red LEDs that are turned on using input MD. A HI (1) input will turn on the Green LED and a LO the Red LED. The default connection will be the PS output of the block but should be changed as required to display the correct status. The message parameters do not apply to the current product.

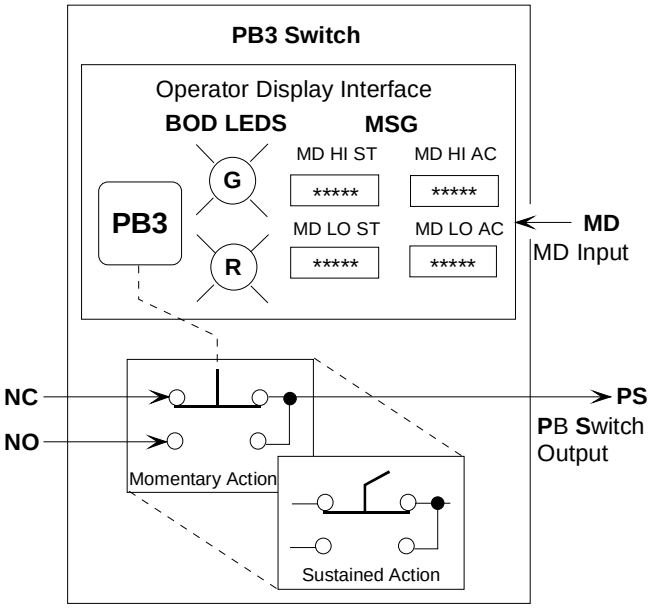

BOD - Basic Operator Display
MD - Message Display

BLOCK DIAGRAM

POWER UP - When the switch is configured for momentary action, it will always power up in the NC position. For sustained action, with the POWER UP parameter set to YES, the switch will power up in the last position during a hot or warm start, and during a cold start it will power up in the NC position. When the POWER UP parameter is set to NO, the switch will power up in the last position during a hot start. During a warm or cold start will power up in the NC position.

4.2.70 PCOM - Phase COMmunication

The Phase Communication **PCOM** function block, in firmware 1.30 and higher, is available on a one per loop basis to enable communication with a higher level device, such as a PC running a batch management software program. When the controller configuration is structured such that logic operations are partitioned in small phase operations, the PCOM block facilitates the interface between the logic controlling the overall phase operations for the batch and the logic performing the control logic for each phase.

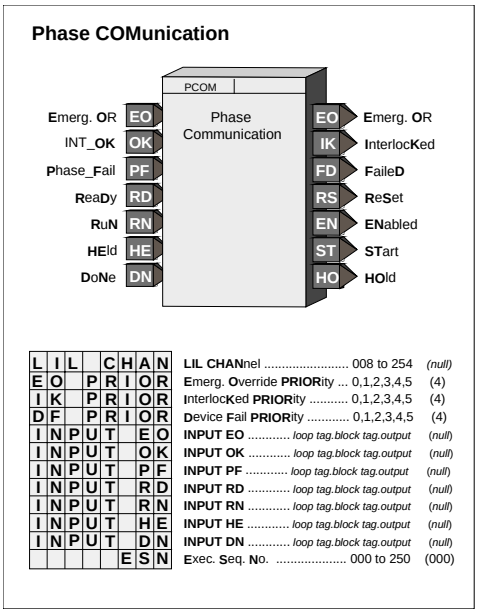

The logic performed by the **PCOM** block is detailed in Boolean form in the figure on the next page. Network communication can be either Modbus or LIL (Local Instrument Link). Details are listed in Section 6 Network Communications. The LOOP # configured in ODC or ODS function block for the loop determines the location of the status word and the status coils in the Modbus mapping. Communication states are represented in Figure 3-1 using the symbols shown below. Modbus states are mapped in coils and LIL states mapped into two 16-bit status words as shown below. Three global channels are used to send out the two status words and an integer value from 1-7 that represents the status of the PCOM block: 1=ABORTED, 2=DONE, 3=HELD, 4=RUN, 5=INTRLK, 6=READY, 7=EMER OR. The location of the first channel is configured using the LIL CHAN parameter, represented by channel z in the LIL mapping tables.

Read/Write States



Read States



Each communication state is read as a 1 or 0. Using Modbus, a write of a 1 (W1) or a 0 (W0) will affect the communication state as defined by the associated logic in Figure 3-1. The W1 or W0 is equivalent to a Mask ON or a Mask OFF using LIL commands. All unconfigured inputs will be treated as low (0) except OK, RD, RN and HE which will be treated as high (1). Three of the output states, EO ("EMERG"), IK ("INTRLK"), and FD ("FAILED") can be configured for priorities 0-5. This will affect the flashing, etc. as previously described for other controller status conditions. These states also have unacknowledged bits as detailed in status word 2. Conditions that require acknowledging can be acknowledged by either using the local faceplate ACK button or by writing to the individual not acknowledged bit or the Not Ack'd PCOM bit.

BIT	15	14	13	12	11	10	9	8	7	6	5	4	3	2	1	0
NAME				*ABORTED*	*DONE*	*HELD*	*RUN*	*READY*	*ABORT*	*PCOMP*	*HOLD*	*RESTART*	*START*	*RESET*	*DFAIL*	*INIT_OK*
1				R	R	R	R	R	W	W	W	R/W	W	W	R/W	R/W
0				R	R	R	R	R	R	R	R	R/W	R	R	R/W	R/W

Status Word 1

BIT	15	14	13	12	11	10	9	8	7	6	5	4	3	2	1	0
NAME	*ACTIVE PCOM*	*Not Ack'd PCOM*									*Not Ack'd FD*	*FAILED (FD)*	*Not Ack'd IK*	*INTRLK (IK)*	*Not Ack'd EO*	EMERG (EO)
1	R	R									R	R	R	R	R	R
0	R	R/W									R/W	R	R/W	R	R/W	R

Status Word 2

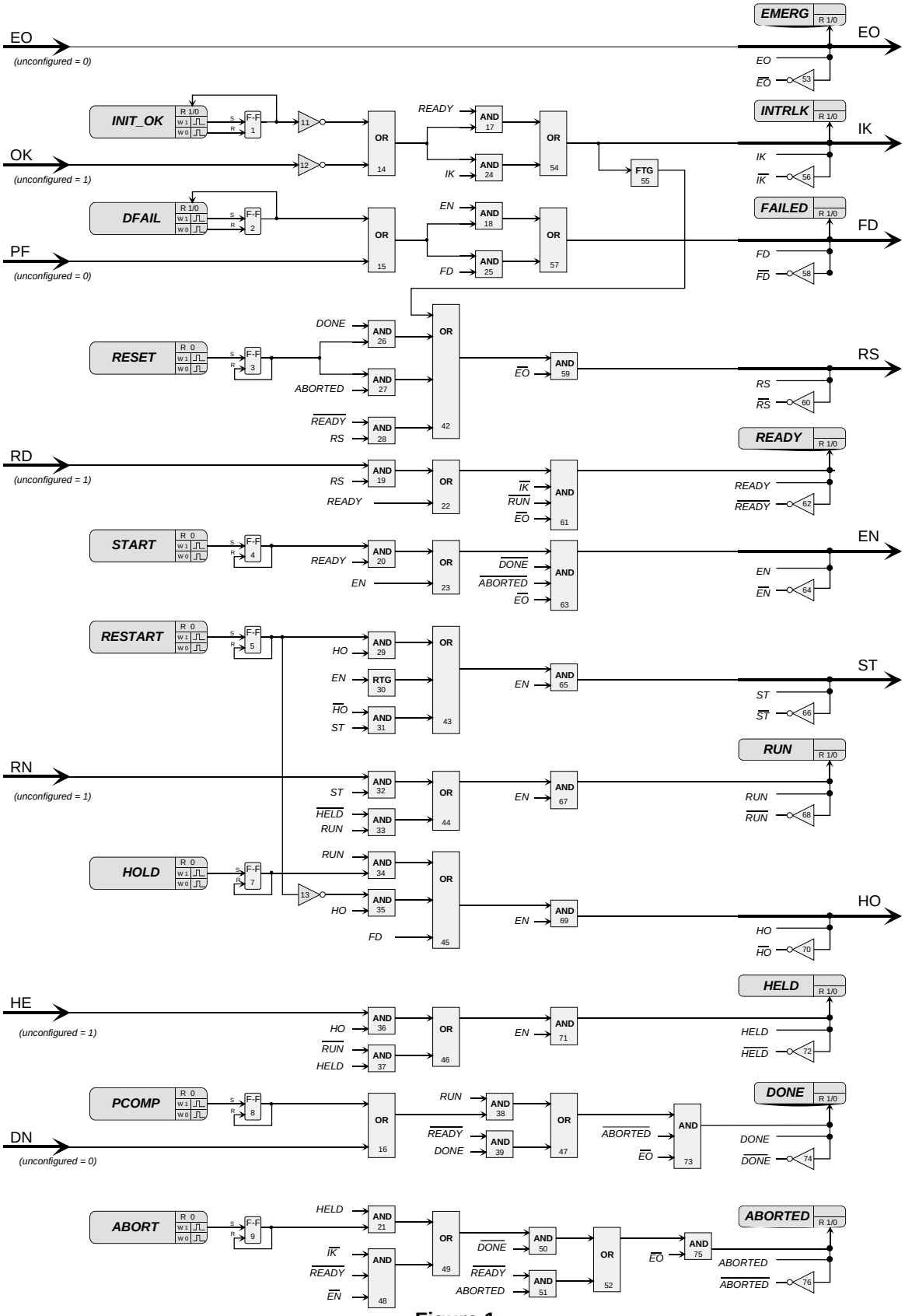
EO
(unconfigured = 0)
EMERG
R 1/0
EO
INIT_OK
OK
(unconfigured = 1)
INTRLK
IK
DFAIL
PF
(unconfigured = 0)
FAILED
FD
RESET
RS
READY
RD
(unconfigured = 1)
START
EN
RESTART
ST
RN
(unconfigured = 1)
RUN
HOLD
HO
HE
(unconfigured = 1)
HELD
PCOMP
DN
(unconfigured = 0)
DONE
ABORT
ABORTED
OR
AND
FTG
F-F
RTG

Figure 1

4.2.71 PD - PD Controller

PD is a proportional only controller with manual reset. It is one of five controller types that can be used on a one per loop basis.

Manual reset allows the output of the controller to be set for a normal operating value (i.e. the desired output when the process equals setpoint under a given load condition). Derivative action is provided when the parameter TD is non-zero. The controller includes an autotune feature that can be initiated from the operator faceplate using the quick TUNE feature.

When input A is high (1) the controller will operate in the normal auto mode and when low (0) causes the controller output to track the feedback signal to eliminate bumping the output when switching to auto. This is accomplished by forcing the reset component R to a value that will keep (GE+R) equal to the feedback value. When the controller is switched to auto the value of the reset component will change back to the manual reset MR value at a rate determined by the MR TLAG setting. When MRTRCK is set to YES the manual reset MR will also track the feedback signal when input A is low.

Input I, when changed from low (0) to high (1) or high to low, will cause the controller to initialize (i.e. eliminate any proportional gain action during that scan cycle). This can be used to prevent bumping the output when changes are made to the setpoint through a switch block.

PD CONTROLLER

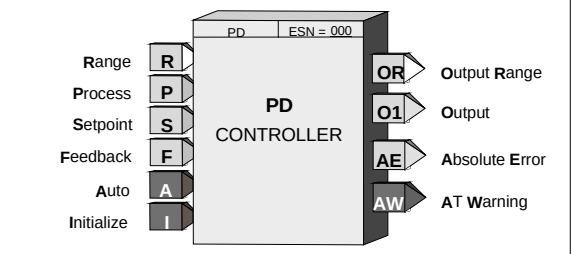

RGE PTR	RanGe PoinTeR (S) ..... *loop tag.block tag*	*(null)*
DIR ACT	DIRect ACTing (H) ..... NO/YES	*(NO)*
PG	Proportional Gain (S) ..... 0.001 to 100.0	*(1.000)*
TD	Time - Derivative (S) ..... 0.00 to 100.00 min	*(0.00)*
DG	Derivative Gain (S) ..... 1.00 to 30.00	*(10.00)*
MR	Manual Reset (S) ..... 0.00 to 100.00	*(0.00)*
MR TLAG	Manual Reset Time LAG (S) . 0.001 to 4000 min	*(0.010)*
MR TRCK	Manual Rest TRACKing (S) ..... NO/YES	*(NO)*
MINSCALE	MINimum SCALE (H) ..... Real	*(0.0)*
MAXSCALE	MAXimum SCALE (H) ..... Real	*(100.0)*
DPP	Decimal Point Position (preferred) (S) 0.0.0.0.0.0	(0.0)
ENGUNITS	ENGineering UNITS (S) .....6 ASCII Char	*(PRCT)*
AUTOTUNE	AUTOTUNE (S) ..... NO/YES	*(YES)*
%DEV	% DEViation during Autotune (S) .... AUTO, 2.5 to 25.0	*(AUTO)*
%HYS	% HYSteresis during Autotune (S) .. AUTO, 0.5 to 10.0	*(AUTO)*
%STEP	% output STEP on first Autotune (S) ..... 5% to 40%	(10)
ATDYNAM	AT DYNAMic settings (S) .... Fast, Medium, Slow	*(M)*
ATRESET	AT RESET (S) ..... NO/YES	*(YES)*
POSTT AT	POST Autotune Transfer (S) ..... NO/YES	*(NO)*
INPUT P	INPUT P (H) ..... *loop tag.block tag.output*	*(null)*
INPUT S	INPUT S (H) ..... *loop tag.block tag.output*	*(null)*
INPUT F	INPUT F (H) ..... *loop tag.block tag.output*	*(null)*
INPUT A	INPUT A (H) ..... *loop tag.block tag.output*	*(null)*
INPUT I	INPUT I (H) ..... *loop tag.block tag.output*	*(null)*
ESN	Exec. Seq. No. (H) ..... 001 to 250	

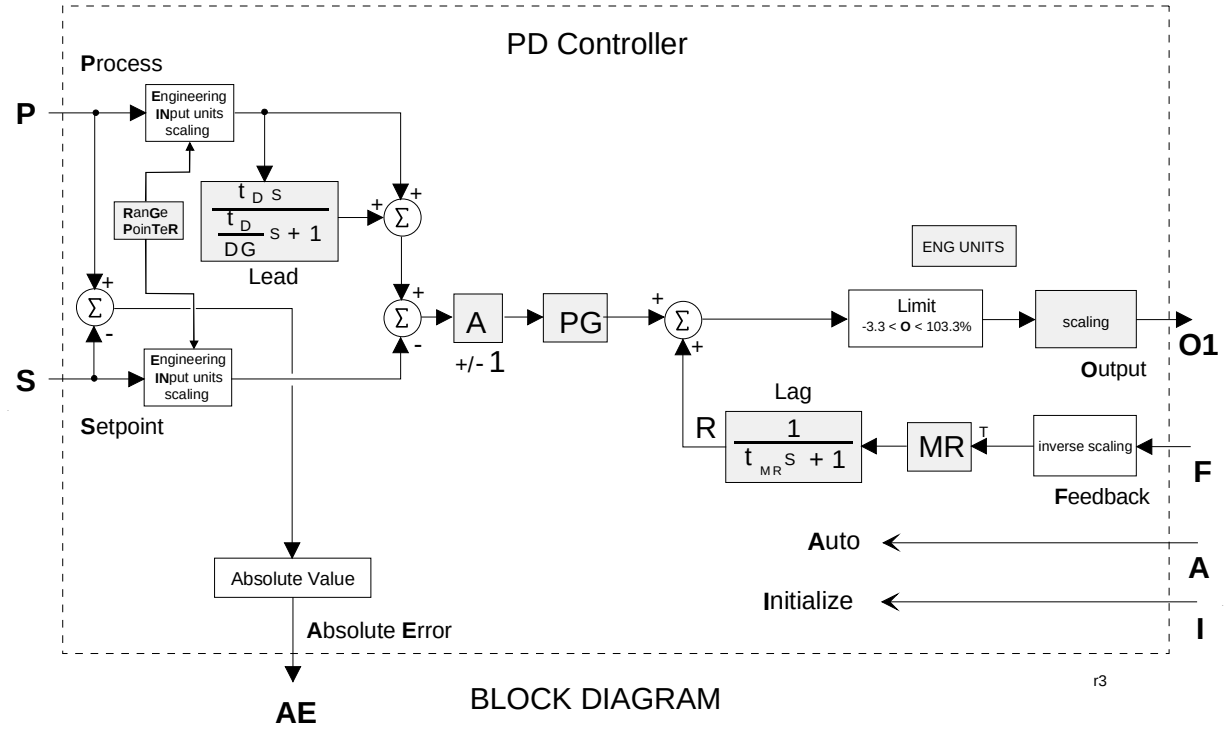

The process range pointer parameter should point to another function block that contains range scaling, such as an analog input that is the source of the process variable. This enables the controller to normalize tuning parameters for the process range. If this parameter is not configured, the controller will use a range scaling of 0.00-100.00. During a warm or cold power up the output will be initialized to MINSCALE and all dynamic elements will be initialized at the current input on the first scan.

The controller output has MINSCALE and MAXSCALE parameters allowing the output signal to be scaled for engineering ranges other than the default of 0 - 100 PRCT. This may be necessary when the controller output is the setpoint to another controller.

The Autotune feature is accessible using the TUNE pushbutton when AUTOTUNE is set to YES. It can be initiated while the loop is in Auto or Manual. The autotuner, when initiated, replaces the PD controller with an on-off control function, places the A/M block in Auto (if in Man), and cycles the control loop through six on-off cycles while learning the process dynamics which it uses to provide tuning recommendations for the PD controller.

The % DEV parameter is the maximum amount in % that the process should deviate from the setpoint during the on-off cycles. This parameter can be set manually or can be configured as AUTO. When AUTO is configured, the autotuner will set the % DEV to 4 times the % HYS. This is the minimum value needed to provide good autotuning results.

The % HYS parameter is the amount that the process must deviate from setpoint before switching the output in the opposite direction. This value must be equal to or slightly greater than any process noise band. If the noise band can not be determined, the autotuner will compute it at the start of an autotuning exercise when the % HYS parameter has been configured as AUTO.

The % STEP parameter is the amount that the valve will change on the first 1.5 on-off cycles. After the first cycles the autotuner will adjust the step to keep the process within the value of the % DEV parameter. On subsequent autotune exercises, the step will use the value computed from the previous exercise unless the AT RESET parameter is set to YES or the controller has been power cycled. The dynamic response recommended by the autotuner can be configured as Fast, Medium, or Slow. The Medium setting will normally provide a response that has no or little overshoot to a setpoint step response.

When the POST AT parameter is set to YES, the control loop will be returned to Auto using the recommended tuning values unless a warning occurred during the test.

More details on autotuning can be found in Section 11 Local Faceplate Operation.

4.2.72 PID - PID Controller

PID is a proportional + integral controller and one of five controller types that can be used on a one per loop basis. It uses external feedback to provide integral action. The block allows interaction with other function blocks or external devices, such as pneumatic controllers and shutoff switches, to eliminate the windup that can occur with other controller types. Derivative action is provided when the parameter TD is non-zero. The controller includes an autotune feature that can be initiated from the operator faceplate using the QUICK access feature.

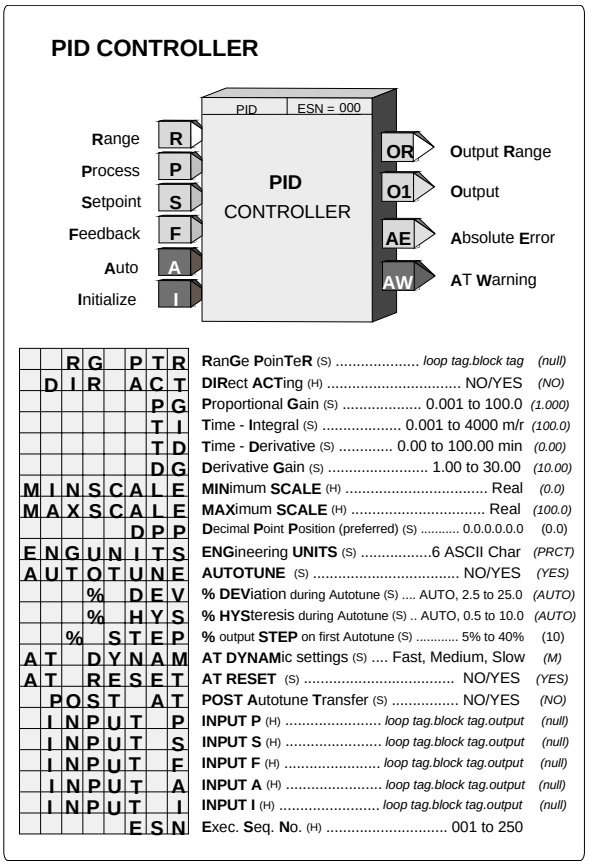

RGPTR	RanGe PoinTeR (S) ..... *loop tag.block tag*	*(null)*
DIRACT	DIRect ACTing (H) ..... NO/YES	*(NO)*
PG	Proportional Gain (S) ..... 0.001 to 100.0	*(1.000)*
TI	Time - Integral (S) ..... 0.001 to 4000 m/r	*(100.0)*
TD	Time - Derivative (S) ..... 0.00 to 100.00 min	*(0.00)*
DG	Derivative Gain (S) ..... 1.00 to 30.00	*(10.00)*
MINSCALE	MINimum SCALE (H) ..... Real	*(0.0)*
MAXSCALE	MAXimum SCALE (H) ..... Real	*(100.0)*
DPP	Decimal Point Position (preferred) (S) 0.0.0.0.0.0	(0.0)
ENGUNITS	ENGineering UNITS (S) .....6 ASCII Char	*(PRCT)*
AUTOTUNE	AUTOTUNE (S) ..... NO/YES	*(YES)*
%DEV	% DEViation during Autotune (S) .... AUTO, 2.5 to 25.0	*(AUTO)*
%HYS	% HYSteresis during Autotune (S) .. AUTO, 0.5 to 10.0	*(AUTO)*
%STEP	% output STEP on first Autotune (S) ..... 5% to 40%	(10)
ATDYNAM	AT DYNAMic settings (S) .... Fast, Medium, Slow	*(M)*
ATRESET	AT RESET (S) ..... NO/YES	*(YES)*
POSTAT	POST Autotune Transfer (S) ..... NO/YES	*(NO)*
INPUTP	INPUT P (H) ..... *loop tag.block tag.output*	*(null)*
INPUTS	INPUT S (H) ..... *loop tag.block tag.output*	*(null)*
INPUTF	INPUT F (H) ..... *loop tag.block tag.output*	*(null)*
INPUTA	INPUT A (H) ..... *loop tag.block tag.output*	*(null)*
INPUTI	INPUT I (H) ..... *loop tag.block tag.output*	*(null)*
ESN	Exec. Seq. No. (H) ..... 001 to 250	

When input A is high (1) the controller operates in the normal auto mode and when low (0) causes reset R to track (F-GE). This will force the controller output to track the feedback within the controller limits and allow the controller to switch back to auto without bumping the output.

The process range pointer parameter points to another function block that has range scaling, such as an analog input that is the process variable. This enables the controller to normalize the tuning parameters for the process range. If this parameter is not configured, the controller will use a range scaling of 0.00-100.00.

Input I, when changed from low (0) to high (1) or from high to low, will cause the controller to initialize (i.e. eliminate any proportional gain action during that cycle). This can be used to prevent bumping the output when changes are made to the setpoint using a switch block.

POWER UP - During a warm or cold power up, the output will be initialized to MINSCALE and all dynamic elements will be initialized at the current input on the first scan.

The controller output has MINSCALE and MAXSCALE parameters allowing the output signal to be scaled for engineering ranges other than the default of 0-100 PRCT. This may be necessary when the controller output is the setpoint to another controller.

The Autotune feature is accessible using the TUNE pushbutton when AUTOTUNE is set to YES and can be initiated while the loop is in Auto or Manual. The autotuner, when initiated, replaces the PID with an on-off control function, places the A/M block in Auto (if in Man) and cycles the control loop through six on-off cycles while learning the process dynamics which it uses to provide tuning recommendations for the PID controller.

The % DEV parameter is the maximum amount in % that the process should deviate from the setpoint during the on-off cycles. This parameter can be set manually or can be configured as AUTO. When AUTO is configured, the autotuner will set the % DEV to 4 times the % HYS. This is the minimum value needed to provide good autotuning results.

The % HYS parameter is the amount that the process must deviate from setpoint before switching the output in the opposite direction. This value must be at least equal to or slightly greater than any process noise band. If the noise band can not be determined, the autotuner will compute it at the start of an autotuning exercise when the % HYS parameter has been configured as AUTO.

The % STEP parameter is the amount that the valve will change on the first on-off cycle. After the first cycle the autotuner will adjust the step to keep the process within the value of the % DEV parameter. On subsequent autotune

exercises, the step will use the value computed from the previous exercise unless the AT RESET parameter is set to YES or the controller has been power cycled. The dynamic response recommended by the autotuner can be configured as Fast, Medium, or Slow. The Medium setting will normally provide a response that has no or little overshoot to a setpoint step response.

When the POST AT parameter is set to YES, the control loop will be returned to Auto using the recommended tuning values unless a warning occurred during the test.

More details on autotuning can be found in Section 11 Local Faceplate Operation.

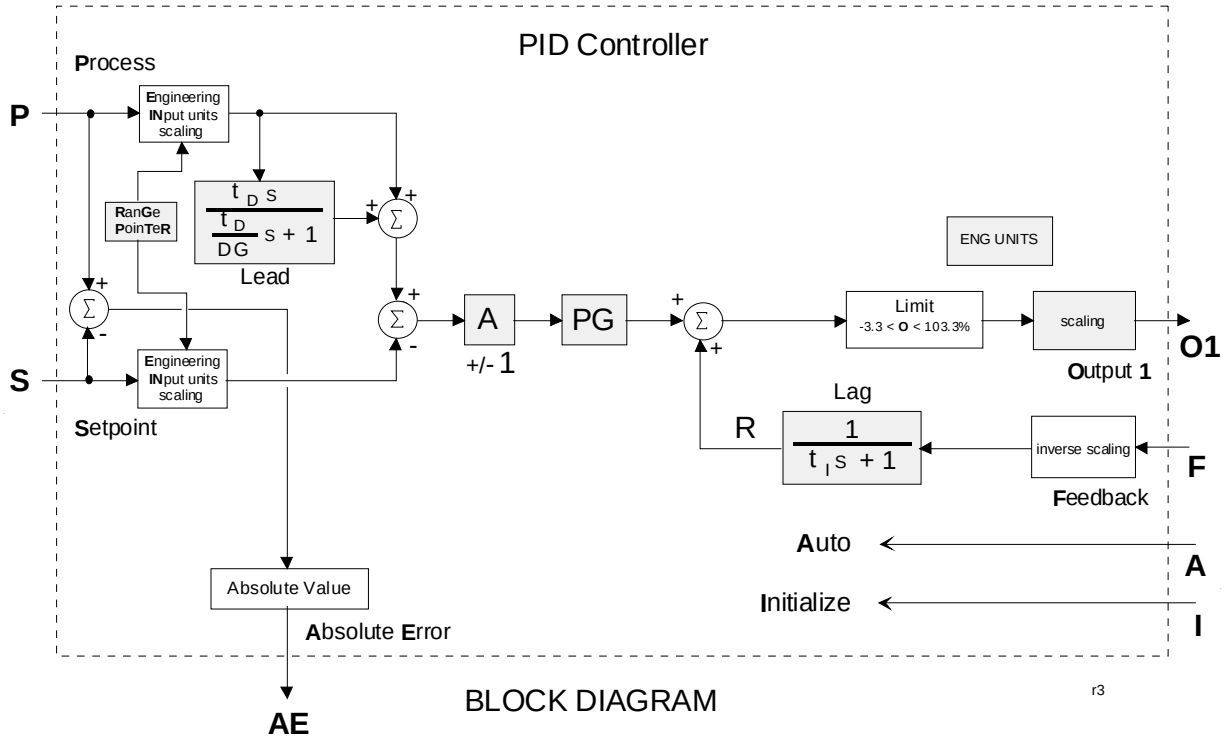

4.2.73 PIDAG - PIDAG Controller

PIDAG is an adaptive gain proportional + integral controller and is one of five controller types that can be used on a one per loop basis. It uses external feedback to provide integral action which allows interaction with other function blocks or external devices, such as pneumatic controllers, shutoff switches. PIDAG eliminates windup that can occur with other controller types. Derivative action is provided when the parameter TD is non-zero. The controller includes an autotune feature that can be initiated from the operator faceplate using the quick TUNE feature.

When input A is high (1) the controller will operate in the normal auto mode and when low (0) causes reset R to track (F-GE). This forces the controller output to track the feedback within controller limits and allow the controller to be switched back to auto without bumping the output.

The process range pointer parameter (input R) points to a function block that has range scaling, such as the analog input that is providing the process variable. This enables the controller to normalize the tuning parameters for the process range. If this parameter is not configured, the controller will use a range scaling of 0.00-100.00.

Input I, when changed from low (0) to high (1) or from high to low, will cause the controller to initialize (i.e. eliminate any proportional gain action during that scan cycle. This can be used to prevent bumping the output when changes are made to the setpoint using a switch block.

PIDAG CONTROLLER

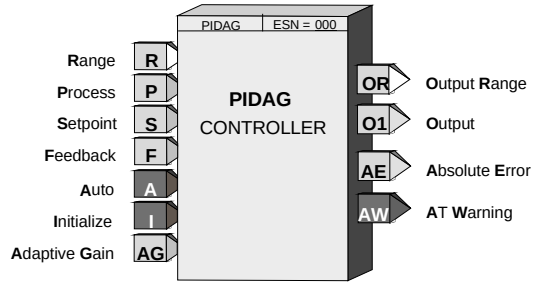

RGPTR	**R**an**G**e **P**oin**T**e**R** (S) ..... *loop tag.block tag*	*(null)*
DIRACT	**DIR**ect **ACT**ing (H) ..... NO/YES	*(NO)*
PG	**P**roportional **G**ain (S) ..... 0.001 to 100.0	*(1.000)*
TI	**T**ime - **I**ntegral (S) ..... 0.001 to 4000 m/r	*(100.0)*
TD	**T**ime - **D**erivative (S) ..... 0.00 to 100.00 min	*(0.00)*
DG	**D**erivative **G**ain (S) ..... 1.00 to 30.00	*(10.00)*
MINSCALE	**MIN**imum **SCALE** (H) ..... Real	*(0.0)*
MAXSCALE	**MAX**imum **SCALE** (H) ..... Real	*(100.0)*
DPP	**D**ecimal **P**oint **P**osition (preferred) (S) 0.0.0.0.0.0	(0.0)
ENGUNITS	**ENG**ineering **UNITS** (S) .....6 ASCII Char	*(PRCT)*
AUTOTUNE	**AUTOTUNE** (S) ..... NO/YES	*(YES)*
%DEV	**% DEV**iation during Autotune (S) ... AUTO, 2.5 to 25.0	*(AUTO)*
%HYS	**% HYS**teresis during Autotune (S) . AUTO, 0.5 to 10.0	*(AUTO)*
%STEP	**%** output **STEP** on first Autotune (S) ..... 5% to 40%	(10)
ATDYNAM	**AT DYNAM**ic settings (S) .. Fast, Medium, Slow	*(M)*
ATRESET	**AT RESET** (S) ..... NO/YES	*(YES)*
POSTAT	**POST A**utotune **T**ransfer (S) N0/YES	*(NO)*
INPUTP	**INPUT P** (H) ..... *loop tag.block tag.output*	*(null)*
INPUTS	**INPUT S** (H) ..... *loop tag.block tag.output*	*(null)*
INPUTF	**INPUT F** (H) ..... *loop tag.block tag.output*	*(null)*
INPUTA	**INPUT A** (H) ..... *loop tag.block tag.output*	*(null)*
INPUTI	**INPUT I** (H) ..... *loop tag.block tag.output*	*(null)*
INPUTAG	**INPUT AG** (H) ..... *loop tag.block tag.output*	*(null)*
ESN	**E**xec. **S**eq. **N**o. (H) ..... 001 to 250	

POWER UP - During a warm or cold power up, the output will be initialized to MINSCALE and all dynamic elements will be initialized at the current input on the first scan.

Input AG is multiplied by the gain error (GE). In version 1.30 of the controller firmware an unconnected AG input will be set to 1.0. In earlier versions it was set to 0.0 which required that the input always be connected to a source (e.g. Hold block) in order for the PIDAG block to function.

The controller output has MINSCALE and MAXSCALE parameters allowing the output signal to be scaled for engineering ranges other than the default of 0 - 100 PRCT. This may be necessary when the controller output is the setpoint to another controller.

The Autotune feature is accessible using the TUNE pushbutton when AUTOTUNE is set to YES and can be initiated while the loop is in Auto or Manual. The autotuner, when initiated, replaces the PIDAG with an on-off control function, places the A/M block in Auto (if in Man) and cycles the control loop through six on-off cycles while learning the process dynamics which it uses to provide tuning recommendations for the PIDAG controller.

The % DEV parameter is the maximum amount in % that the process should deviate from the setpoint during the on-off cycles. This parameter can be set manually or can be configured as AUTO. When AUTO is configured, the autotuner will set the % DEV to 4 times the % HYS. This is the minimum value needed to provide good autotuning results.

The % HYS parameter is the amount that the process must deviate from setpoint before switching the output in the opposite direction. This value must be at least equal to or slightly greater than any process noise band. If the noise

band can not be determined, the autotuner will compute it at the start of an autotuning exercise when the % HYS parameter has been configured as AUTO.

The % STEP parameter is the amount that the valve will change on the first on-off cycle. After the first cycle the autotuner will adjust the step to keep the process within the value of the % DEV parameter. On subsequent autotune exercises, the step will use the value computed from the previous exercise unless the AT RESET parameter is set to YES or the controller has been power cycled. The dynamic response recommended by the autotuner can be configured as Fast, Medium, or Slow. The Medium setting will normally provide a response that has no or little overshoot to a setpoint step response.

When the POST AT parameter is set to YES, the control loop will be returned to Auto using the recommended tuning values unless a warning occurred during the test.

More details on autotuning can be found in Section 11 Local Faceplate Operation.

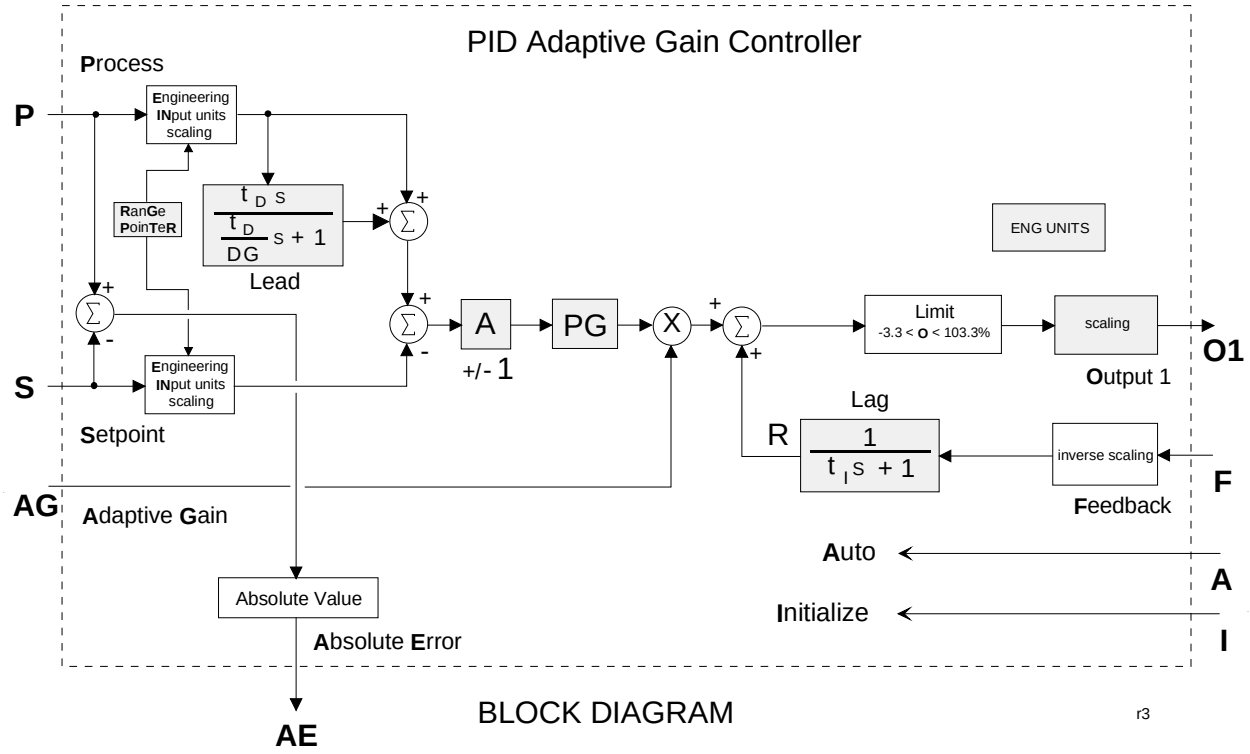

4.2.74 PRSEQ - Program Sequencer

PRSEQ function blocks are available on a one per loop basis. They can be used to generate a simple setpoint profile or a complex batch sequence involving multiple discrete input and output logic operations as well as setpoint profiles.

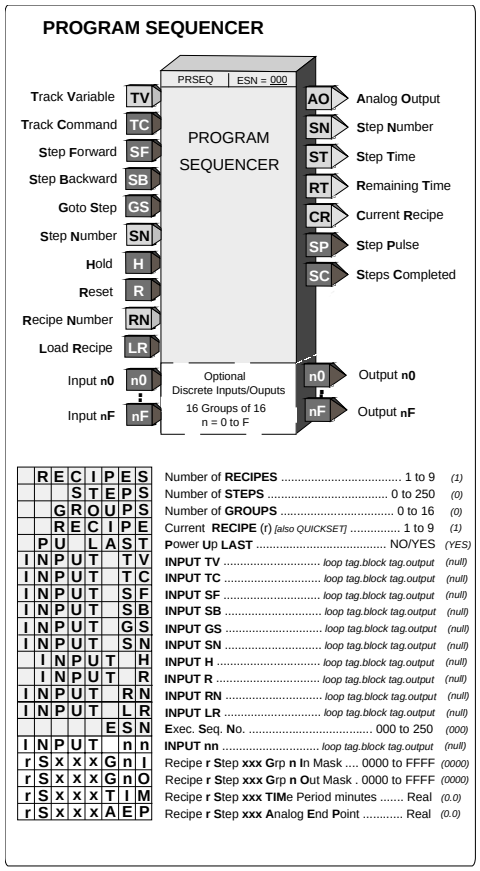

The number of steps is configurable using the STEPS parameter and the number of discrete inputs/outputs using the GROUPS parameter. Sixteen (16) discrete inputs/outputs are provided for each group. If these parameters are increased after the function block is initially configured, the values of all previously entered step parameters will be retained. If however, a configuration is downloaded from the PC-based Graphical Configuration Software, the parameter values are determined by the download that includes the entire block configuration. The PRSEQ can store from 1 to 9 recipes. Each recipe will have the same number of steps and groups but all of the parameters can be configured differently.

Two new inputs have been added in firmware 1.30: RN (Recipe Number) and LR (Load Recipe). Input RN will accept a recipe number and input LR on a positive transition will select the recipe number which is the RN input. The RN input will round the number to the nearest integer value. A recipe number that is out of range will have no effect and the current recipe will remain. The recipe number set by the RN and LR inputs will be retained during HOT and WARM starts. During a COLD start, the recipe will revert to the recipe set by the configuration parameter "Recipe."

Input SN will accept a step number and input GS, on a positive transition, will select the step number, which is the SN input. The SN input will round the number to the nearest integer value. A step number that is out of range will have no effect and the sequencer will remain at the current step.

Output AO (analog output) will track input TV when input TC is high (1). If input TC goes low (0), AO will remain at the tracked values unless either a timed step ramps AO to the AEP (analog end point) for the step or an event completes the step at which time AO will go to the AEP value for the completed step.

The current sequencer step can be changed by any of the following six events:

1. the Reset input R going high (1) moving it to step 1
2. Goto Step input GS going high (1) forcing the sequencer to the step indicated by the whole value of input SN
3. the Step Forward input SF going high (1) moving it to the next higher step unless on the last step
4. the Step Backward input SB going high (1) moving back to the previous step unless on the first step
5. a step time expiring advancing to the next step
6. all the discrete inputs nn are True (1) that match the input mask (a mask value of '0' is a 'don't care' condition) advancing to the next step

Input H will hold the remaining time of the current step and disable advancing of the sequencer by operations 5 and 6 but will allow operations 1, 2, 3, and 4 to move the sequencer to the starting position of a new step.

When the last sequencer step is completed, SC will be set high (1). The sequencer can not be moved past the last step unless the reset input R goes high (1) forcing it to position 1. The sequencer can be moved forward only when in position 1. Network communications will allow the sequencer to be moved to a new step and the remaining time of the current step to be changed to a new value.

When discrete groups are used and a step is desired as 'timed only' one discrete input should be used to prevent the input mask from moving the sequencer to the next step. This can be accomplished by requiring a high (1) input and then not connecting that input, since unconnected inputs will be treated as 0.

When discrete groups are used and a step is desired as 'event only', the TIMe parameter for the step should be set to 0.0. The Analog Output will remain at the AEP value of the previous step or, if at step 1, the Analog value will be 0.0. When the sequencer advances to the next step, the Analog Output will go to the AEP value for the completed step.

POWER UP - During a warm start, if PU LAST is set to YES, all outputs, step number, track variable, and remaining step time will be initialized at the last values prior to power fail. During a cold start all outputs are initialized to 0 and the PRSEQ is in a reset condition.

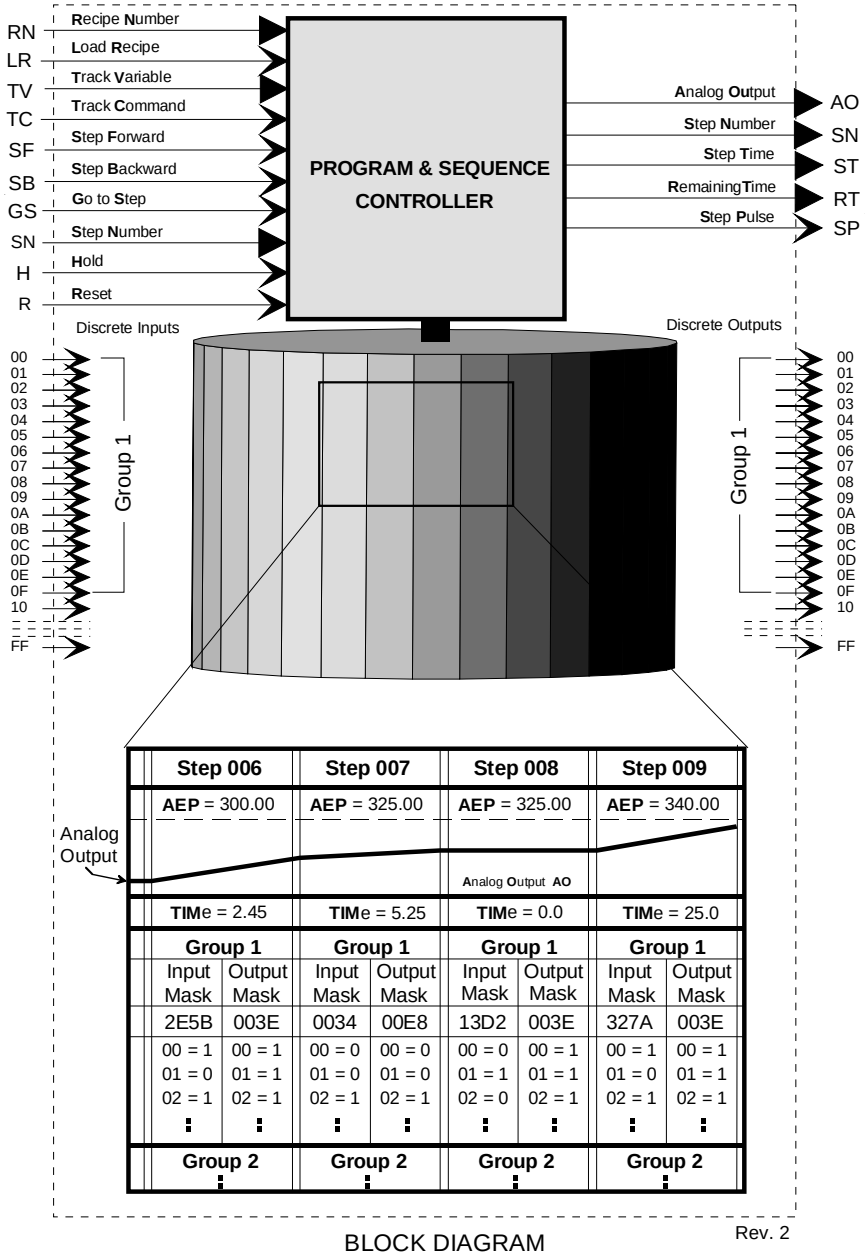

BLOCK DIAGRAM

4.2.75 QHD_ - Quickset Hold

QHD_ function blocks enable a real value to be changed on-line using the QUICKSET feature. The block is identified by an 8-character name that will be displayed in the QUICKSET mode. The block is configured with a range entered as MIN SCALE and MAX SCALE to set a usable range, and a Decimal Point Position parameter can set the allowed precision. The hold value cannot be changed beyond the -10% to 110% value of these limits and will change continuously as the pulser is turned. The MAX value must always be set greater than the MIN value. The block can also be forced to track input TV by asserting input TC high (1).

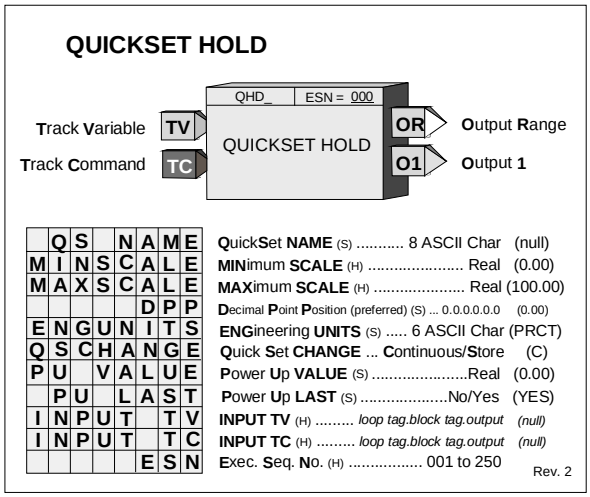

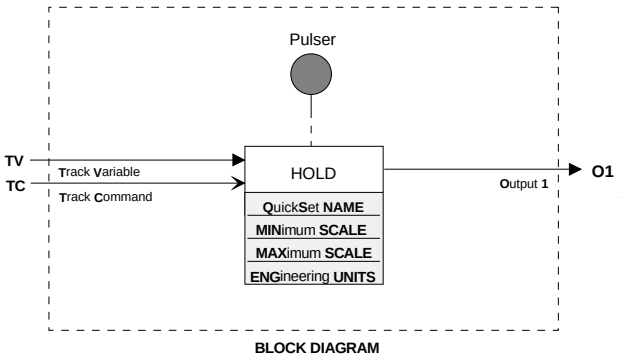

BLOCK DIAGRAM

Firmware 1.30 added parameter QSCHANGE. It enables the block output to either update continuously in the Quickset mode as the pulser knob is turned or to only update the output with the value in the numeric display when the STORE button is pressed.

When configuring the DPP (Decimal Point Position) it is important to keep the resolution to the minimum necessary for operation changes. It will take the operator longer turning the pulser if the resolution is too high. For example, if only 0.1% changes are needed, configure a 0-100 range as 0.0 – 100.0 and not 0.000 – 100.000.

During Hot or Warm start the QHD will power up in the last position during a Cold start at the -10% range value.

4.2.76 RATIO - Ratio

RATIO function blocks can be used on a one per loop basis. They provide a means of setting a ratio in an external setpoint application, for example, controlling a captive flow while maintaining the ratio between a wild flow and the captive flow at the desired value. Inputs A and E (external ratio) and the operator set ratio R value are multiplied and become the function block output O1.

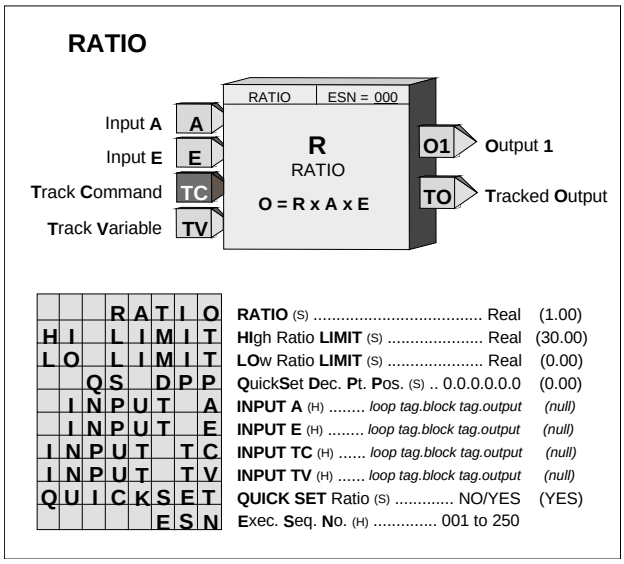

Track Command input TC, asserted high (1), cause the ratio block to track the input variable TV. The ratio value to be recalculated is then R = TV / (A x E). The value of R will be limited at the HI or LO LIMIT range settings. The factory default settings of the ratio limits are 0.00 - 30.00.

The RATIO can be adjusted using the QUICKSET feature if parameter QUICKSET is set to YES. The RATIO will continuously change as the knob is adjusted. Press the STORE button when the final value is reached to insure that the new RATIO setting will be retained on a Cold power up condition. The QS DPP parameter enables setting of the Ratio adjustment resolution when in the QUICKSET mode.

If input A or E is not configured, its value will be set to 1. When input TC or TV is not configured, its value will be set to 0.

The TO (Tracked Output) is normally used in applications where an external device is being used to set a ratio in place of the RATIO parameter (R is then set to 1.0). When it is desired to have the output of the RATIO block track the TV variable, the external device is forced to track TO. Input E will then equal TV/[Ax (1.0)] and, therefore, the RATIO block output O1 will equal TV.

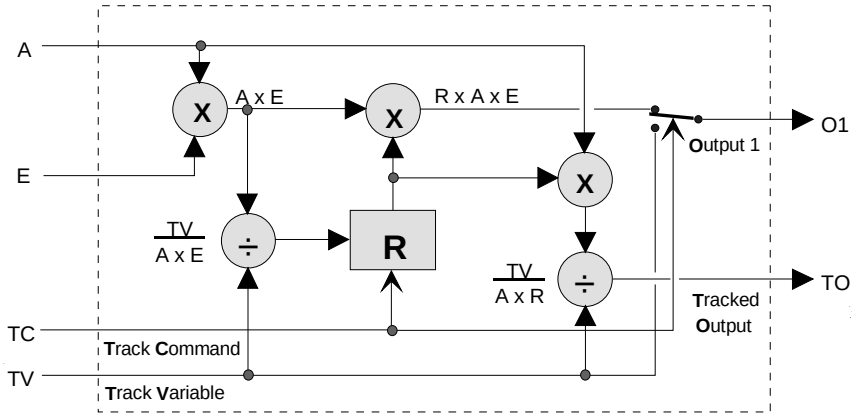

BLOCK DIAGRAM

When a configuration containing the BIAS function block is edited in i|config and then downloaded to an on-line controller, the controller will ignore a change to the BIAS parameter value and continue to run with the pre-download value.

4.2.77 RCT_ - Repeat Cycle Timer

RCT_ function blocks provide repeat time cycles that can be used in logic timing operations or with PID blocks to provide adaptive on times controlled by the PID block. Output ET will provide the time in minutes that has elapsed during the current cycle (ON + OFF). Output RT is the remaining time in the current cycle and will equal the total cycle time (ON + OFF) when the timer has not been started.

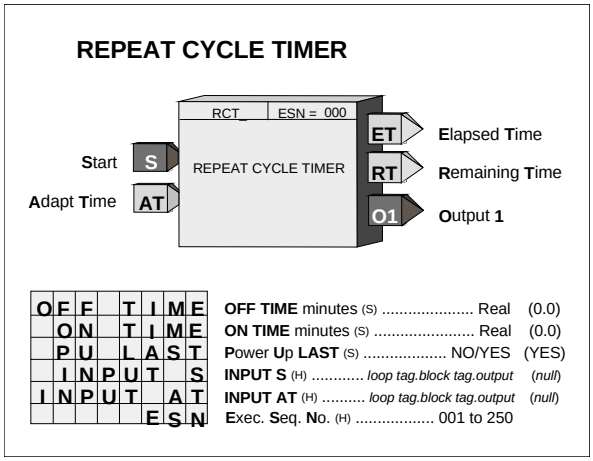

With firmware 1.30 and higher, the ON and OFF TIME is adjustable over the full range of the display which is 0.00000 to 999999. In earlier firmware the minimum time setting was 0.1. If the delay time is set to less than the scan time of the station the delay time will equal the scan time.

Input S, asserted high (1), will cause the RCT block to start the timing cycle. Output O1 will first go high (1) for a time set by ON TIME and then it will go low (0) for a time set by OFF TIME. It will continue to repeat this cycle until input S is asserted low (0) which forces O1 low (0) and ends the timing cycle. The timer will run continuously when input S is not configured.

ADAPTIVE ON TIME - this feature is active only when input AT is configured. It has a valid range of 0.0 to 1.0 and there are two separate modes of adaptive on time depending on the configuration of the OFF TIME parameter.

- OFF TIME = 0.0 - The time cycle will remain fixed and equal to the value of ON TIME. The output will be high for a period equal to ON TIME x AT.

- OFF TIME > 0.0 - The output will be low (0) for a period equal to OFF TIME and will be high for a period equal to ON TIME x AT. The time cycle equals [(ON TIME x AT) + OFF TIME].

POWER UP - With the PU LAST parameter set to YES, during a hot or warm power up the block will initialize the input/output states and elapsed time at the last values. During a cold start, they will be set to 0. With PU LAST set to NO, during a hot start the block will initialize the input/output states and elapsed time at the last values. During a warm or cold start they will be set to 0.

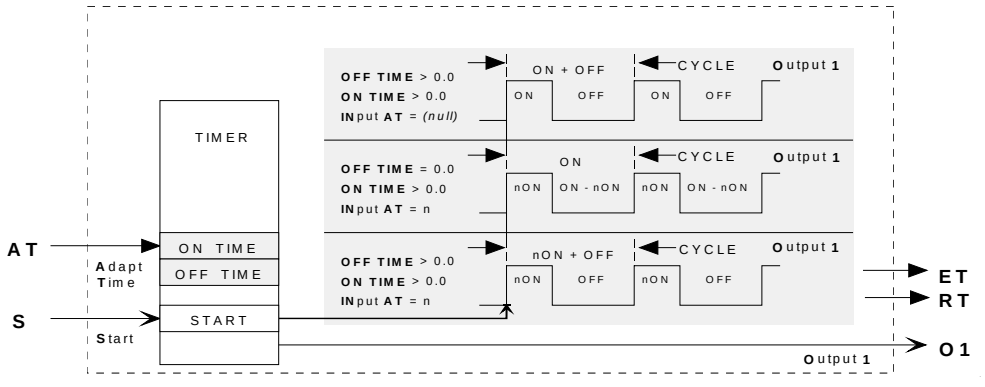

BLOCK DIAGRAM

4.2.78 RLM_ - Rate Limiter (V3.0)

RLM_ function blocks limit the rate of change of analog input A. Separate up and down rates are entered in configuration, in engineering units per minute. Output RL will be high (1) if the block is limiting a rising input signal and output FL will be high when the block is limiting a falling input signal.

The Adaptive Rate inputs will vary the configured adaptive rate between 0 - 1 as the analog input varies from 0 to 100%. When the input is not configured the adaptive rate will not apply.

Input E asserted high (1) will enable the limit action of the block. When input E is low (0), the output will track the analog input. If input E is not configured, the limit action of the block will be enabled

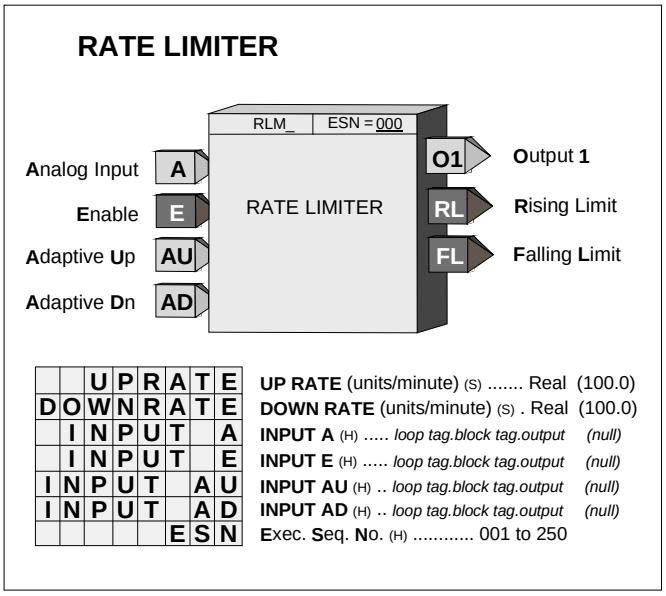

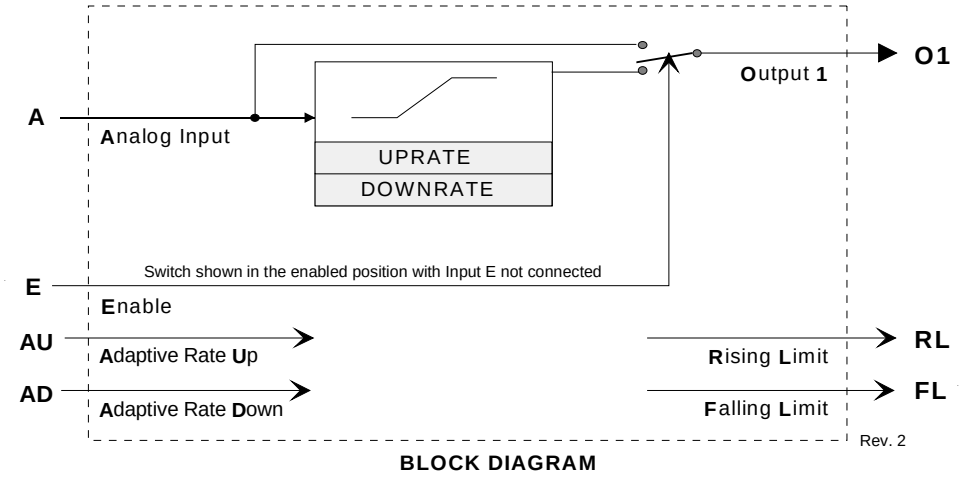

BLOCK DIAGRAM

4.2.79 ROT_ - Retentive On Timer

ROT_ function blocks perform an on-delay timing function with output states determined by inputs ON and EN.

When input EN is low (0) outputs D and ND are low and when input EN is high (1) the outputs will be determined by the ON input and the elapsed time.

When ON goes high the elapsed time will start. Output D will go high after ET (elapsed time) equals or exceeds the DLY TIME. Output RT (remaining time) equals DLY TIME - ET. If ON goes low, the elapsed time will stop at the current value and will continue when ON returns to a high state. The elapsed time returns to 0.0 when input EN goes low. Output ND will be high (1) if input EN is high and output D is not high. With firmware 1.30 and higher the DLY TIME is adjustable over the full range of the display which is 0.00000 to 999999. In earlier versions the minimum time setting was 0.1. If the delay time is set to less than the scan time of the station the delay time will equal the scan time.

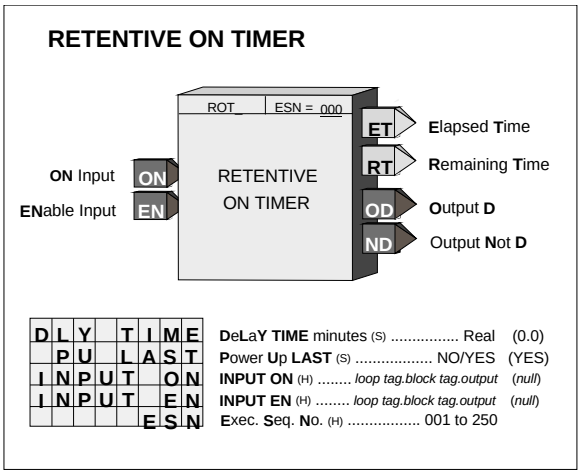

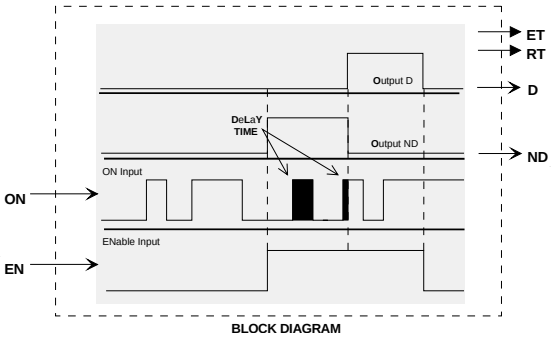

BLOCK DIAGRAM

POWER UP - During a warm start, when PU LAST is set to YES, the block will initialize at the input/output states and elapsed time at the instant power down occurred. A cold start will initialize the input/output states and elapsed time to 0.

4.2.80 ROUT_ - Relay Outputs

ROUT_ function blocks provide SPDT contacts activated by function block input C. The relay will turn on when the block input is high (1) and will turn off when low (0). Two relay outputs are available on the Expander Board.

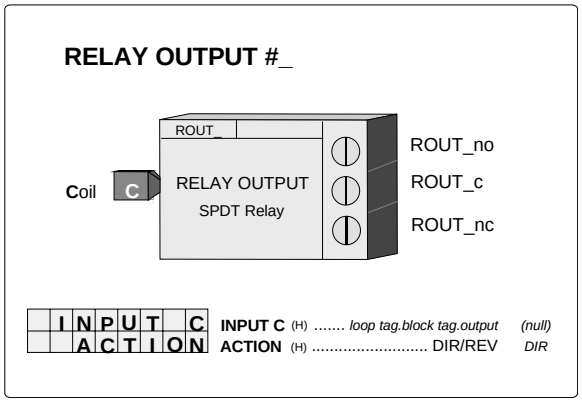

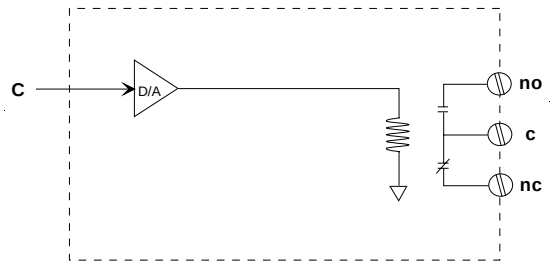

BLOCK DIAGRAM

Terminal Connections are listed in Section 9.1 Model 353RCM_ _ _ _B_.

4.2.81 RSF_ - RS Flip-Flop

RSF_ function blocks perform a reset dominant flip-flop function as detailed in the truth table. An unused S input will be set high (1) and an unused R input will be set low (0).

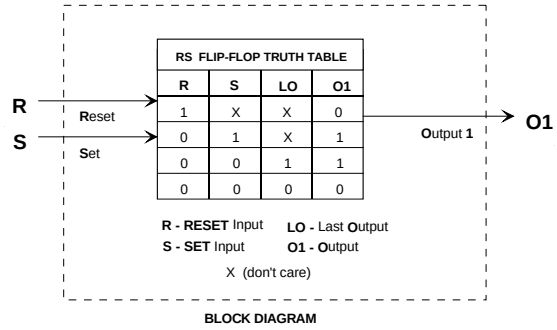

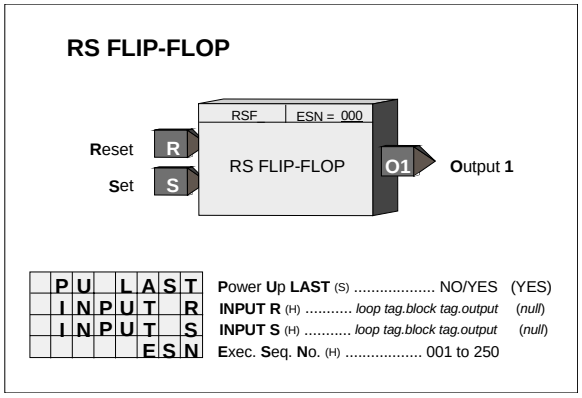

POWER UP - During a warm start, when PU LAST is set to YES, the block will initialize at the input/output states at the instant power down occurred. A cold start will initialize the input/output states to 0.

4.2.82 RTG_ - Rising Edge Trigger

RTG_ function blocks provide a high (1) output for one scan cycle each time input P transitions from a low (0) to a high (1).

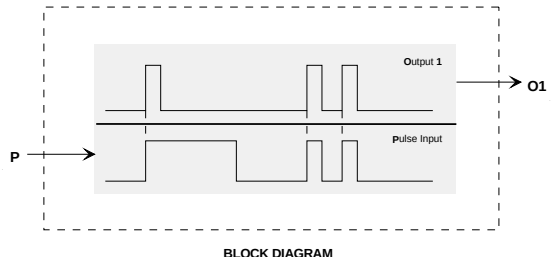

BLOCK DIAGRAM

RISING EDGE TRIGGER

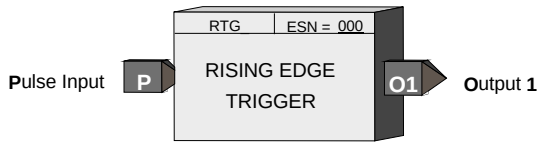

		I	N	P	U	T			P					
							E	S	N					

INPUT P (H) ..... *loop tag.block tag.output* (*null*)
Exec. **S**eq. **N**o. (H) ..... 001 to 250

4.2.83 RTT_ - Real Time clock Trip (V2.0)

RTT_ function blocks provide high (1) outputs when time from the CLOCK block coincides with the TIME, DATE, & DAYS of the Week TRIP settings. The block outputs will remain high while the CLOCK coincides with the settings.

REAL TIME TRIP

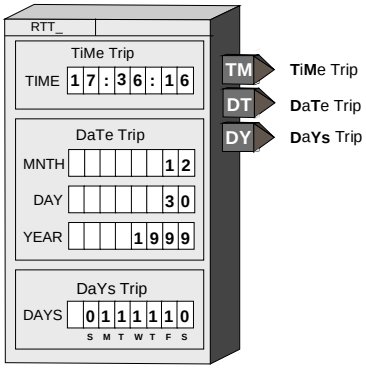

T	I	M	E		T	R	P	**TIME TRiP** (S) ..... 00:00:00 - 23:59:59	(0)
D	A	Y	S		T	R	P	**DAYS TRiP** (S)..... SMTWTFS	(1111111)
M	N	T	H		T	R	P	**MNTH TRiP** (S)..... 01 - 12	(01)
	D	A	Y		T	R	P	**DAY TRiP** (S)..... 01 - 31	(01)
Y	E	A	R		T	R	P	**YEAR TRiP** (S)..... 1970 -3099	(1999)

Rev. 2

4.2.84 SCL_ - Scaler

SCL_ function blocks provide a means to scale an analog signal. It will re-range a signal by using the range pointer to reference the function block with the original range. When the range pointer (input R) is not configured, the function block will not re-scale the input signal but will pass it directly to the output. The purpose, under this situation, would be to provide minimum and maximum scale, preferred decimal point position, and units for another block (e.g. operator display) to reference.

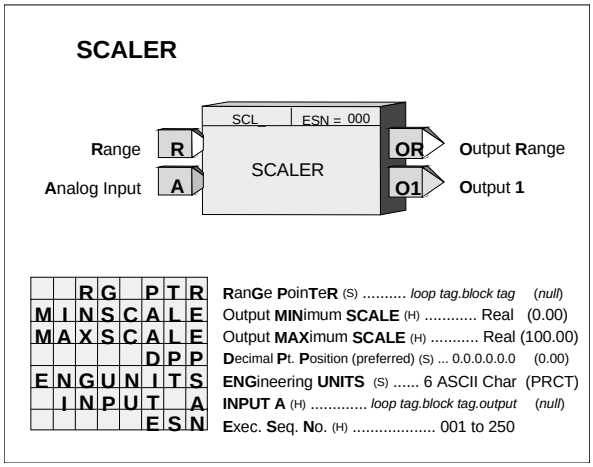

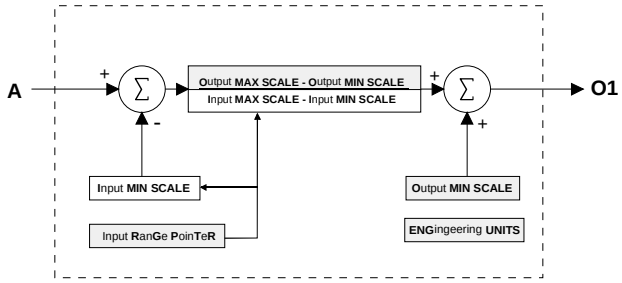

BLOCK DIAGRAM

4.2.85 SEL_ - Signal Selector

SEL_ function blocks can provide a high or low signal selection on the three input signals. Unused inputs will be set equivalent to the lowest real value when configured as a HI selector and to the highest real value when configured as a LO selector.

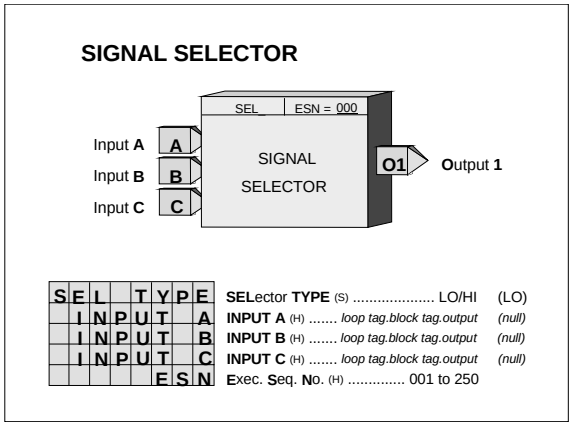

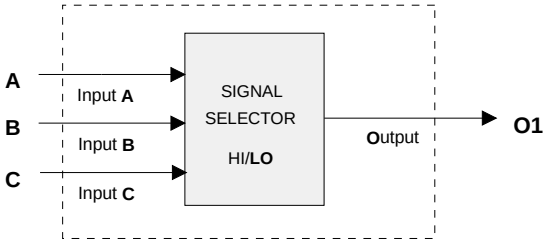

BLOCK DIAGRAM

4.2.86 SETPT - Setpoint

SETPT function blocks can be used on a one per loop basis to permit operator adjustment of the controller setpoint within the loop. The on-line setpoint is adjustable, using the pulser knob, while <loop tag>.S is the displayed variable; unless the track command TC is high (1), at which time the setpoint will track the TV input.

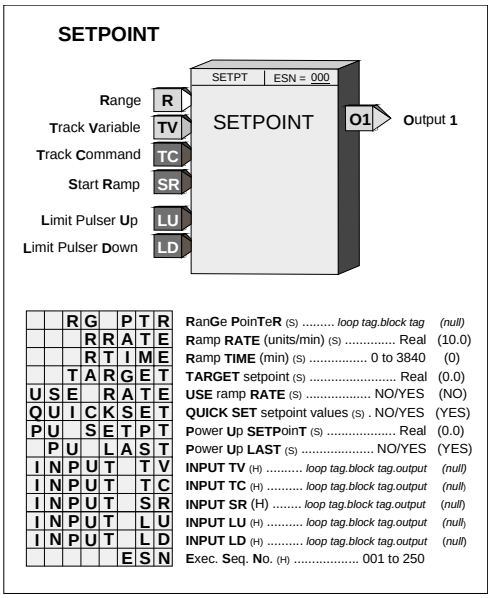

A setpoint ramping feature allows the setpoint to ramp from the current setpoint value to a TARGET value. The start of a ramp can be initiated using a communication command asserting input SR high (the ramp starts on a positive transition of the SR input), or using the RAMP ON/OFF function in the QUICKSET mode. Both ramp RATE and ramp TIME can be set in configuration. Firmware 1.30 and higher sets the USE RATE default to NO; earlier versions are set at YES. Setting configuration parameter USE RATE to YES will cause the setpoint to change at the rate setting and ignore a configured ramp time. The RTIME or RRATE, TARGET, and PU SETPT values can be set using the QUICKSET feature if the QUICKSET parameter is set to YES.

The RG PTR, range pointer, parameter determines the normal operating range of the function block. If the pointer is not configured the block will use 0.00 to 100.00. The range of the setpoint block will be limited to -10% to 110% of the range parameter. If a range change is made the current setpoint, ramp rate, target setpoint, and power up setpoint will be moved to be the same % values within the new range.

The setpoint block also has two inputs LU and LD that can be used to limit pulser changes in one direction. This can be used if another function block is limiting the setpoint and it is desired not to allow the operator to adjust the setpoint block to a value beyond the external limit.

POWER UP - The function block can be configured to power up in various conditions during a warm start. If the PU LAST parameter is set to YES, the block will power up with the last setpoint. When SETPT does not power up in last position or on a cold start it will power up using the PU SETPT parameter.

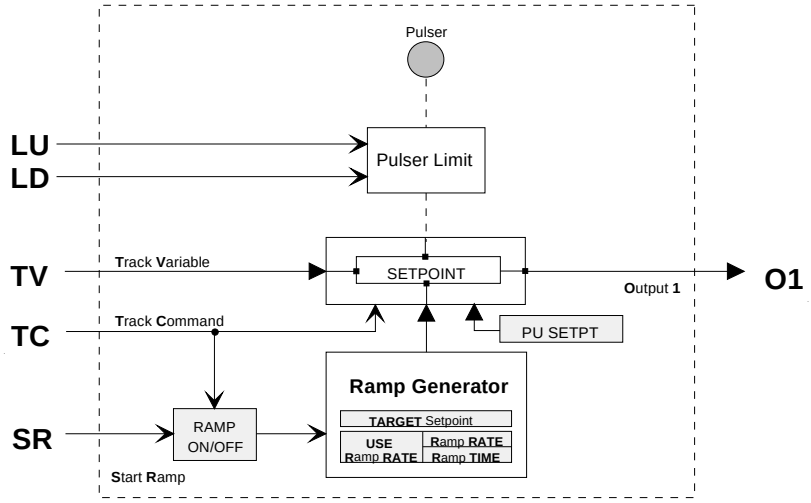

BLOCK DIAGRAM

4.2.87 SIN_ - SINE

SIN__ function blocks, included in firmware 1.30 and higher, accept a radian input and output the sine of that angle.

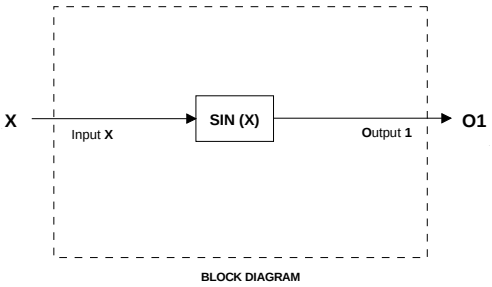

BLOCK DIAGRAM

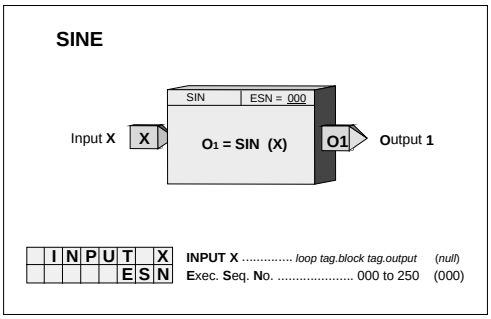

4.2.88 SPLIM - Setpoint Limit

SPLIM function blocks can be used on a one per loop basis to limit the setpoint of the loop controller. Input A will pass through the function block to output O1 unless it exceeds one of the limit settings at which time the block will output the limit value.

If the HI LIMIT is set lower than the LO LIMIT the block will always output the high limit value.

Output status HS or LS will be high (1) if the block is in a limit condition. The status event 'S HI LIM' or 'S LO LIM' will be displayed in the alphanumeric if the SL PRIOR is greater than 0. A priority of 0 disables the reporting of the limit function and sets the bits in the status word to 0. See below for additional details regarding priorities..

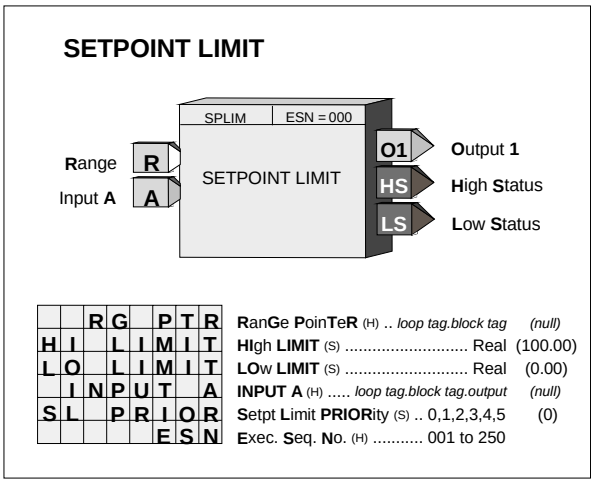

The SPLIM function block has an RG PTR parameter (input R) that defines the normal operating range of the block. Limit settings can be made within -10% to 110% of the range pointer values. If the range pointer is not configured, a range of 0.0 to 100.0 will be used. If a range change is made the current limit value will be moved to be the same % value within the new range.

PRIORITIES - The priority assigned to SL PRIOR will affect the operation as follows (the outputs HS and LS will go high with all priority assignments, including 0, when event is active):

1. Bargraphs, event LEDs, and condition will flash. ACK button must be used to stop flashing.
2. Bargraphs, event LEDs, and condition will flash. Flashing will stop if ACK or if event clears.
3. Event LEDs and condition will flash. ACK button must be used to stop flashing.
4. Event LEDs and condition will flash. Flashing will stop if ACK or event clears.
5. Event LEDs and condition will turn on when event is active and off when the event clears.
0. No display action occurs when event is active. The HL and LL status bits are always set to 0.

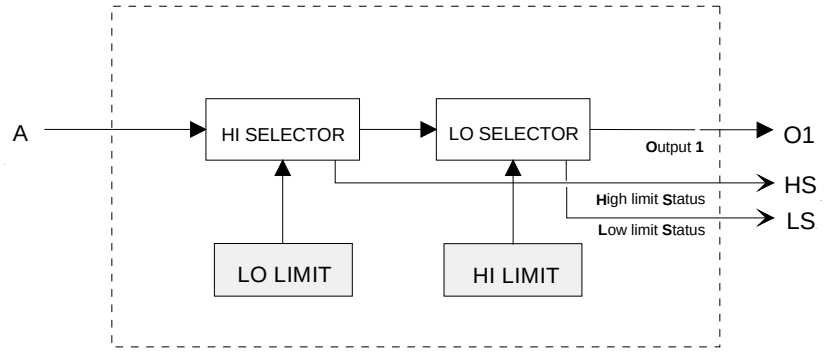

BLOCK DIAGRAM

4.2.89 SRF_ - SR Flip-Flop

SRF_ function blocks perform a set dominant flip-flop function as detailed in the truth table. An unused R input will be set high (1) and an unused S input will be set low (0).

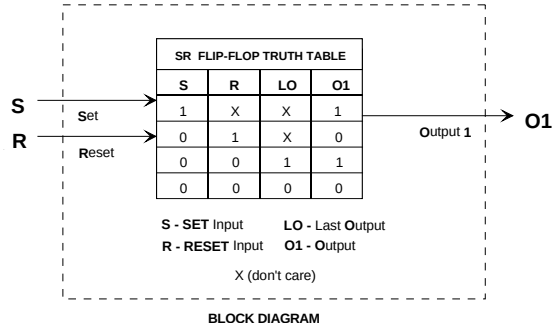

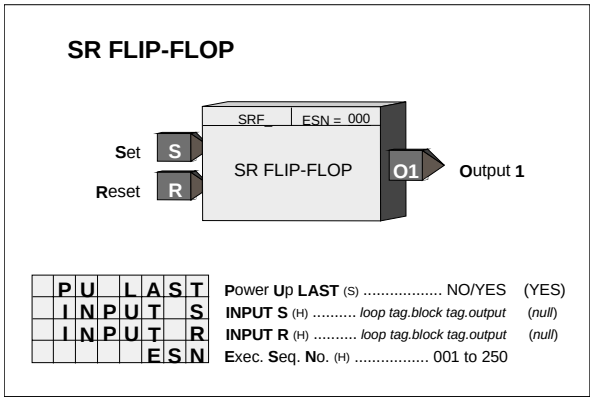

POWER UP - During a warm start, when PU LAST is set to YES, the block will initialize at the input/output states at the instant power down occurred. A cold start will initialize the input/output states to 0.

4.2.90 SRT_ - Square Root

SRT_ function blocks compute the square root of input signal A. The input has a built-in low limit that will limit the signal to the square root computation to 0.0.

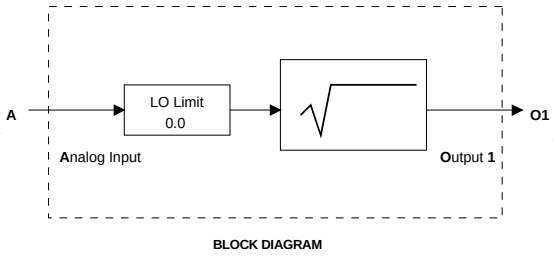

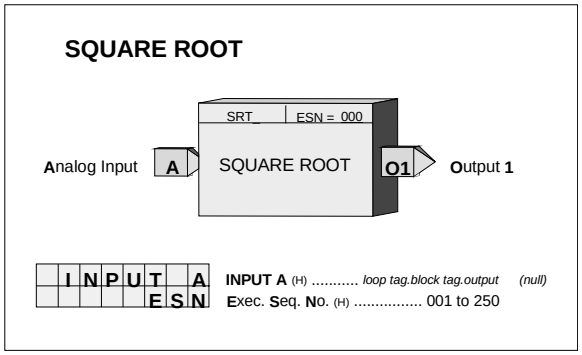

4.2.91 SUB_ - Subtraction

SUB_ function blocks perform arithmetic subtraction on the two input signals. Any unused input will be set to 0.0.

All inputs should have the same engineering units. If units are not consistent a SCL function block can be used or an alternative is to use a MTH function block that has built-in scaling functions.

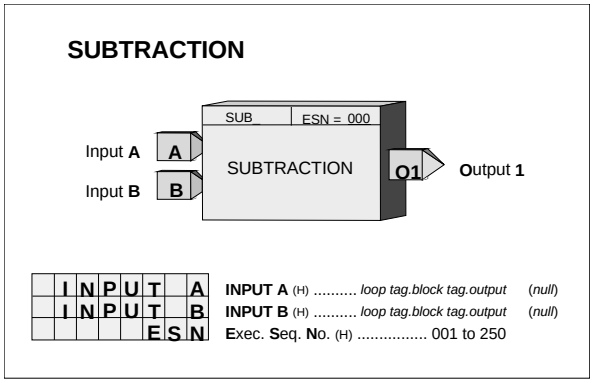

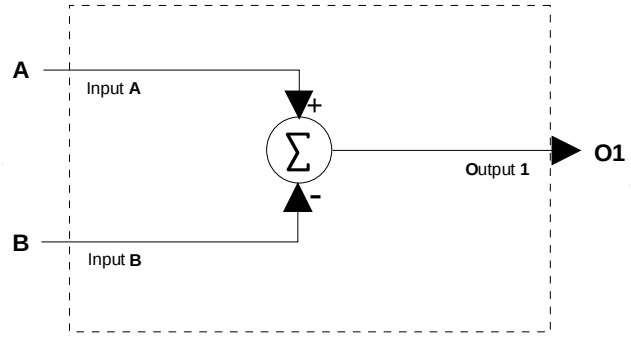

BLOCK DIAGRAM

4.2.92 TAN_ - TANGENT

TAN__ function blocks, in firmware 1.30 and higher, accept a radian input and output the tangent of that angle.

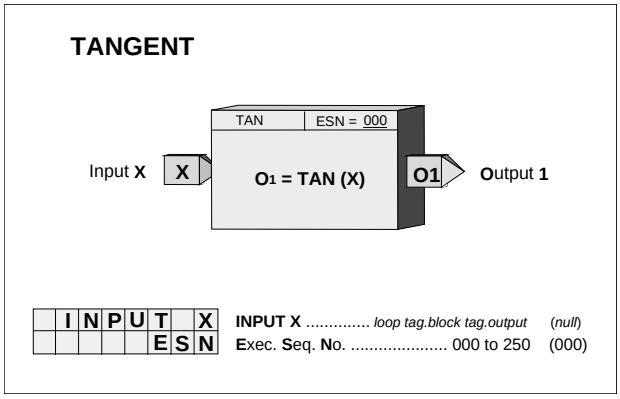

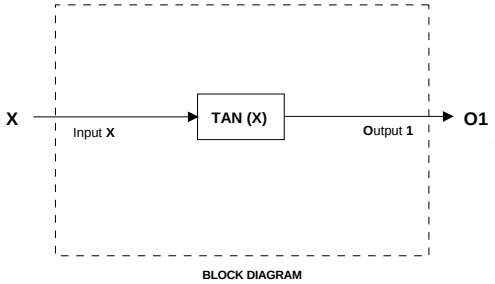

BLOCK DIAGRAM

4.2.93 TH_ - Track & Hold

TH_ function blocks can hold an initial value that will transfer to the block output O1 on power up and it can be used to track the TV input when input TC is high (1).

In 1.30 firmware or greater, the HOLD value can be changed on line, using the pulser, when the TH_.O1 block output is directly connected to X or Y inputs in an ODC block. The range and resolution used by the pulser making on line changes will be determined by the X Range or Y Range inputs.

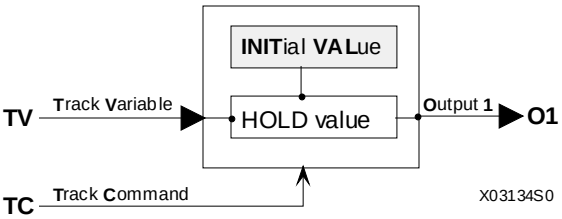

BLOCK DIAGRAM

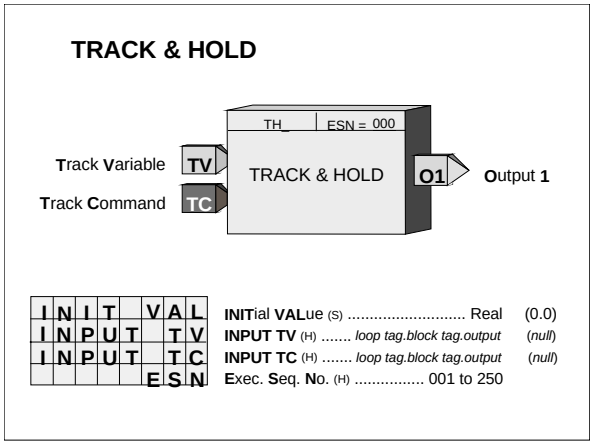

4.2.94 TOT_ - Totalizer (V2.3)

TOT_ function blocks accept a Boolean input and will retain a running total of the input transitions as the block output as a real value for interconnection to other blocks in the controller. The running total can be reset when input R goes high (1). Input R is executed prior to reading input S on each scan cycle.

Unconfigured inputs will be set to 0. When the EDGETRIG parameter is set to 1 the total will increment on each 0 to 1 transition on input S. When the EDGETRIG parameter is set to 0 the total will increment on each 1 to 0 transition.

The total will be retained during a WARM or HOT start and will be initialized to 0.0 on a COLD start.

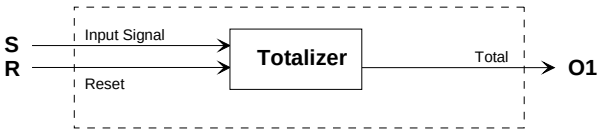

BLOCK DIAGRAM

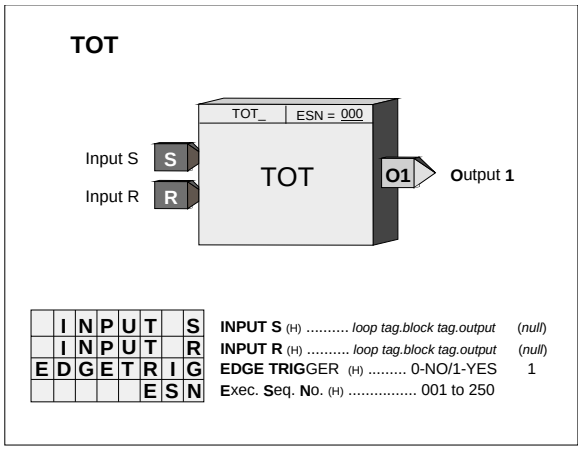

4.2.95 TSW_ - Transfer Switch

TSW_ function blocks select one of two analog input signals as the output signal. Input A becomes the output when input SC is low (0) and input B will be the output when input SC goes high (1).

Unconfigured inputs will default to SC=low(0), A=0.0, B=100.0.

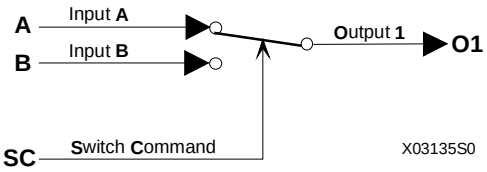

BLOCK DIAGRAM

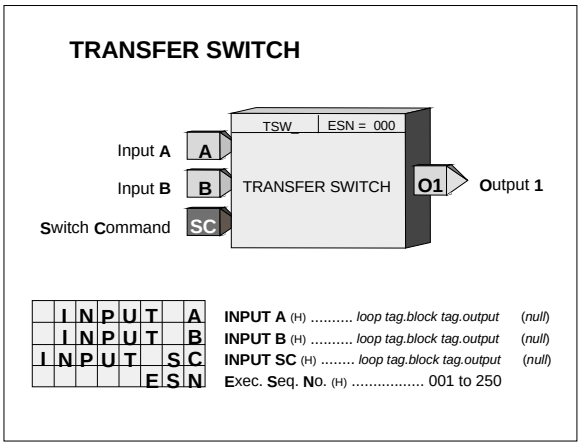

4.2.96 UAH_ - Universal bus Analog Hybrid (V2.3)

UAH_ function blocks convert (4) function block analog input interconnection signals to a 4-20 mA module output and convert (4) 4-20 mA module input signals to function block outputs for interconnection to other function blocks within the controller.

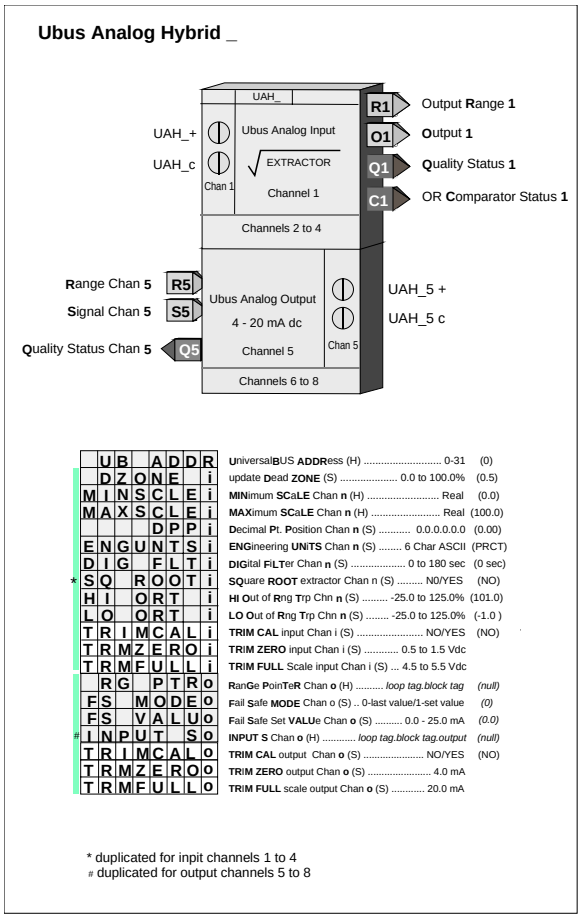

Analog Inputs:

A 6-character ASCII value can be entered to identify the engineering units of each output signal. The scaled output range is configurable and has a factory default of 0.0 to 100.0 PRCT. Ranges such as 300.0 to 500.0, representing engineering units in degrees C, can also be configured. The Output Range is a special data type that includes the MIN and MAX SCALE, the DPP, and the ENGUNITS that can be connected to other blocks having Range (RG PTR) inputs.

Ubus Analog Hybrid blocks are available with the 353R controller. These blocks provide simple integration of the corresponding i|o modules into the 353R controller configuration. The DZONE parameter is used to minimize the effects of signal noise on the Universal Bus updating requirements when the variable is in a steady state condition. The variable will always be updated every 10 controller scan cycles regardless of this setting to insure the highest accuracy reading at steady state.

The input is factory calibrated for 4-20 mAdc and should not require field calibration. However, the input can be trimmed to meet the field loop input requirements by selecting YES for the TRIMCAL parameter. Actual field inputs can be applied to trim the input for Zero and Full Scale values to actual transmitter zero and full scale values. This feature can be useful to trim out any small errors that may be present in the transmitter loop.

Analog Outputs:

The i|o module has a fail safe mode. If for any reason the module is not updated by the controller within the prescribed time, the module will enter the fail safe mode. The module can be configured (FS MODEn) to output the last value or a set value (FS VALUn) while in the fail safe mode

The output is factory calibrated for 4-20 mAdc and should not require field calibration. However, the output can be trimmed to meet the field loop output requirements by selecting YES for the TRIMCAL parameter. Output calibration is trimmed by adjusting the pulser until the desired output (i.e. 4.0 mA for zero, 20.0 mA for full scale) is obtained and then pressing the store button.

Output Qn is the Quality Status output for channel n. It will go high if the output driver detects high impedance or an open circuit. The Qn output can be used to sound an alarm, switch to a second output circuit in a redundancy application, etc.

General:

Outputs will retain their outputs on a HOT or WARM start and will initialize at 0 on a COLD start.

A high at the Quality Status output Qn can indicate:

- A module is not installed in the configured slot position.
- A module of the incorrect type has been installed in the configured slot position.
- The module is not communicating with the controller
- The module is in the failsafe mode
- An A/D error exist in the **input** channel of the module
- An open circuit condition exists in the **output** channel

Use the block with Ubus Module - iO-4AI-4AO.

4.2.97 UAI_ - Universal bus Analog Input (V2.0)

UAI_ function blocks convert (8) 4-20mA dc or 1-5 Vdc inputs from the corresponding i|o module, having ranges defined during configuration, into block output signals that are scaled in engineering units. These outputs are then interconnected to other function blocks within the controller.

A 6-character ASCII value can be entered to identify the engineering units of each output signal. The scaled output range is configurable and has a factory default of 0.0 to 100.0 PRCT. Ranges such as 300.0 to 500.0, representing engineering units in degrees C, can also be configured. The Output Range is a special data type that includes the MIN and MAX SCALE, the DPP, and the ENGUNITS that can be connected to other blocks having Range (RG PTR) inputs.

A high at the Quality Status output Qn can indicate:

- A module is not installed in the configured slot.
- A module of the incorrect type has been installed in the configured slot.
- An A/D error exists in the channel.
- The UD HART parameter is configured to YES and the connected field device does not support HART.
- The UD HART parameter is configured to YES and the connected field device is not communicating.

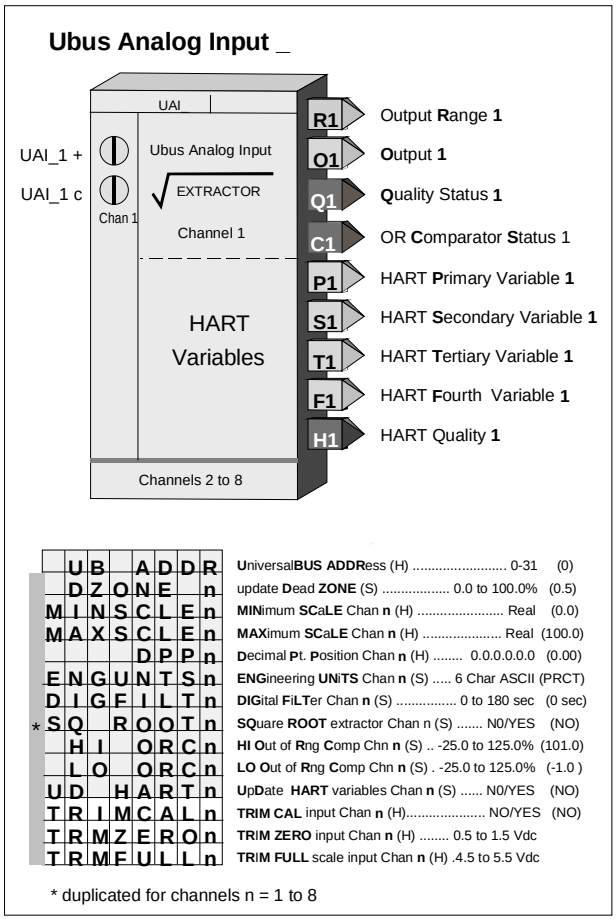

In addition, four HART variables are available as block outputs. In many cases HART 2-wire transmitters provide additional information such as static pressure, temperature, density, etc. which is retrieved from the transmitter using HART digital communications. These HART outputs are in the engineering units from the transmitter.

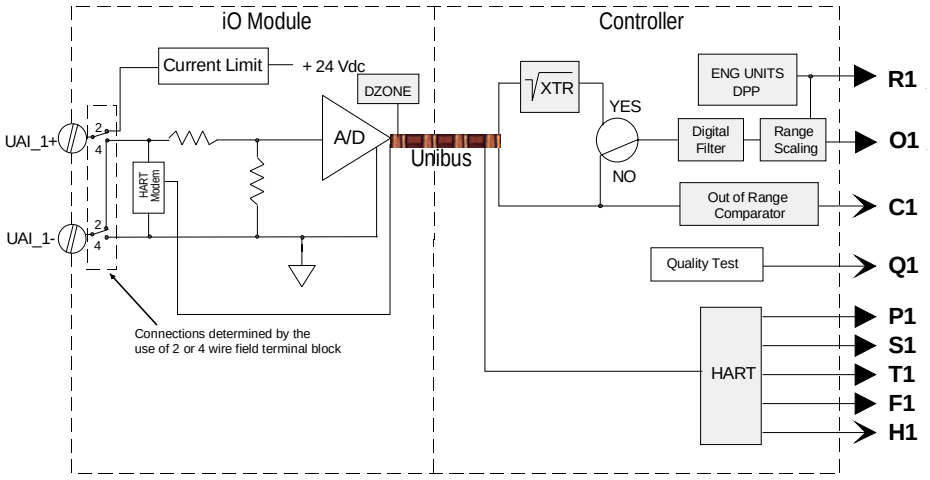

BLOCK DIAGRAM

Ubus Analog Input blocks are available with the 353R controller. These blocks provide simple integration of the corresponding i|o modules into the 353R controller configuration. The DZONE parameter is used to minimize the effects of signal noise on the Universal Bus updating requirements when the variable is in a steady state condition. The variable is updated whenever the analog signal change exceeds the DZONE and it will always be updated every 10 controller scan cycles regardless of this setting to insure the highest accuracy reading at steady state.

A digital filter (time constant) is available to dampen process noise. A square root extractor is also available to linearize a flow signal from a differential pressure transmitter, allowing the block output to be configured for flow units. Output Qn indicates the quality of the analog output signal On, and will be high (1) when output On is bad, and low (0) when good.

High and Low signal comparators (HI and LO ORC respectively) are available to identify an input signal that is out of range. The comparator can be set between -25% and 125% of the transmitter range. This may indicate, for example, a transmitter failure, a disconnected signal wire, or an incorrectly wired transmitter. The On status can then be used in the 353R configuration to, for example, sound an alarm or put a control loop in standby with a fail safe output.

HART communication is enabled by selecting UDHART, then YES.

A trim calibration feature is available that enables fine adjusting of the UAI module calibration to meet actual input conditions. By selecting TRIMCAL then YES, actual field inputs can be applied to calibrate the Zero and Full scale values to actual transmitter zero and full scale values. This can be used to trim out any small errors that may be present in the transmitter loop.

Power Up - During a hot, a warm or a cold start, the function block will temporarily by-pass the digital filter to enable the output to initialize at the actual hardware input signal.

Use the block with Ubus Modules - iO-8AI-2H, iO-8AI-V, and iO8AI-2.

4.2.98 UAO_ - Universal bus Analog Output (V2.0/2.3)

UAO_ function blocks convert (8) function block interconnection signals, connected to inputs Sn, to block outputs having ranges of 4-20 mAdc. The function block includes scaling to range the 4-20 mA output with the block-input signal. The range pointer parameter of each channel (input Rn) tells the block where to obtain scaling information. If this parameter is not configured the block will use a range of 0.0 to 100.0.

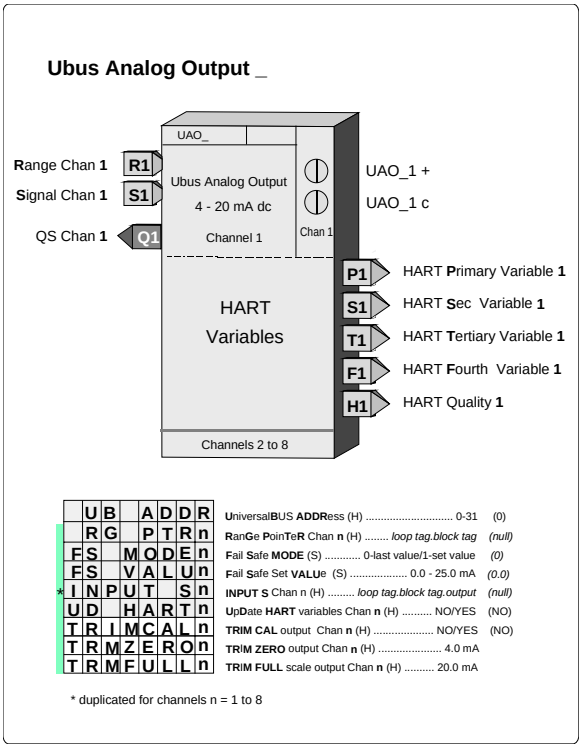

- A module is not installed in the configured slot.
- The controller is not communicating with the module.
- A module of an incorrect type has been installed in the configured slot.
- The module has detected an open circuit output.
- The UD HART parameter is configured to YES and the connected field device does not support HART.
- The UD HART parameter is configured to YES and the connected field device is not communicating.

The i|o module has a fail safe mode. If for any reason the module is not updated by the controller within prescribed time, the module will enter the fail safe mode. The module can be configured (FS MODEn) to output the last value or a set value (FSVALUEn) while in the failsafe mode.

The output is factory calibrated for 4-20 mAdc and should not require field calibration. However, the output can be trimmed to meet the field loop output requirements by selecting YES for the TRIMCAL parameter. The output calibration is trimmed by rotating the pulser until the desired output (i.e. 4.0 mA for zero, 20.0 mA for full scale) is obtained and then pressing the store button.

In addition, four HART variables are available as block outputs with firmware version 2.30. In many cases HART valve positioners provide additional information, such as valve position and actuator pressure, that is retrieved from the valve positioner using HART digital communications. These HART outputs are in the engineering units from the positioner.

Output Qn is the Quality Status output for channel n. It will go high if the output driver detects high impedance or an open circuit. The Qn output can, for example, be used to sound an alarm or switch to a second output circuit in a redundancy application.

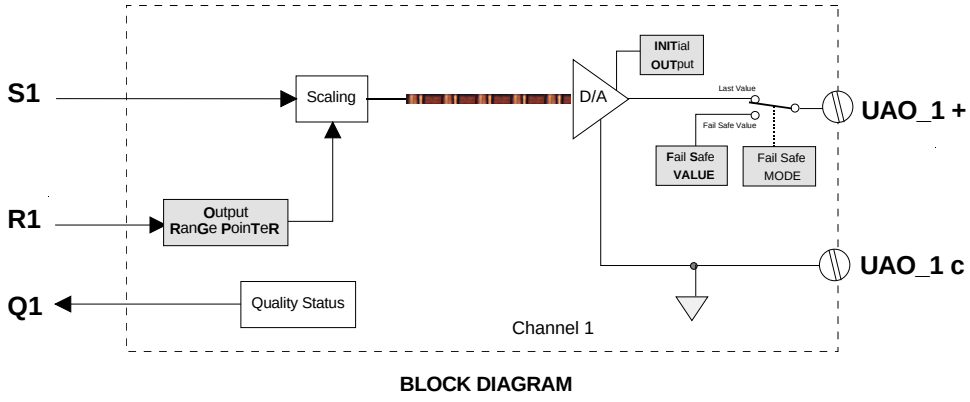

BLOCK DIAGRAM

Use the block with Ubus Module - iO-8AO.

4.2.99 UDI_ - Universal bus Digital Input (V2.0)

UDI_ function blocks can be used to sense (8) discrete signals from external sources and provide block outputs representing the state of these inputs. The block output is high (1) when the input is on and low (0) when off. A number of i|o module types are available as described in Table 15-1 Model Designation in Section 15 Model Designation and System Specifications.

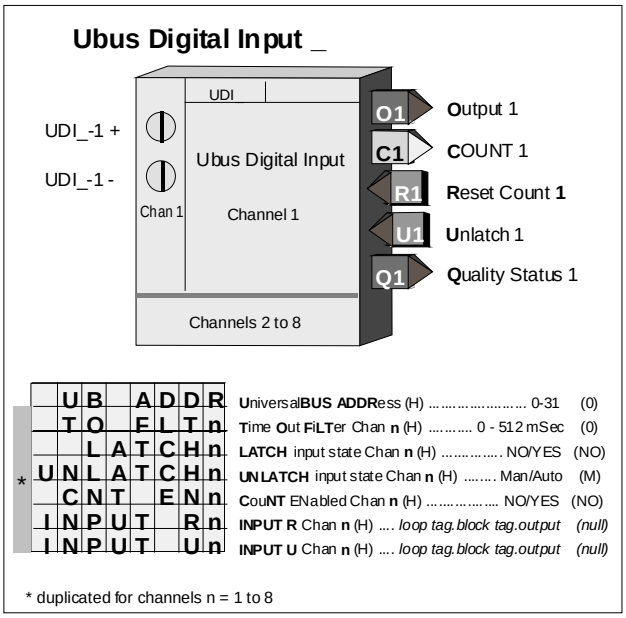

	UBADDRn	UniversalBUS ADDRess (H) 0-31 (0)
	TOFLTn	Time Out FiLTer Chan n (H) ..... 0 - 512 mSec (0)
	LATCHn	LATCH input state Chan n (H) ..... NO/YES (NO)
*	UNLATCHn	UNLATCH input state Chan n (H) ..... Man/Auto (M)
	CNTENn	CouNT ENabled Chan n (H) ..... NO/YES (NO)
	INPUTRn	INPUT R Chan n (H) .... *loop tag.block tag.output* *(null)*
	INPUTUn	INPUT U Chan n (H) .... *loop tag.block tag.output* *(null)*

A Time Out Filter can be configured for each channel. The filter provides a delay period allowing the input to settle to a measurable value. When set to 0 the digital input has a bandwidth of 1000Hz. The TO FLTn can provide a time delay of 2 to 512 ms in 2 ms steps.

A high at the Quality Status output Qn can indicate:

- A module is not installed in the configured slot.
- The controller is not communicating with the module.
- A module of an incorrect type has been installed in the configured slot.

Each channel can be configured as real time or latched. When LATCHn is set to YES, an input signal that goes high will remain high until the input is unlatched. The UNLATCHn parameter enables the input to be unlatched automatically, each time the controller reads the input on the Universal Bus, or only on the rising edge of the unlatch input Un.

A 16-bit counter is available that totals the number of low frequency pulses received on the input. The maximum pulse rate is 250 Hz when the timeout filter is switched off. When the filter is active the maximum pulse rate will be determined by the timeout period that is configured. When the counter overflows (i.e. > 65536) it rolls over and starts from 0. The block output Cn will provide the count value as a real number when the CNT ENn parameter is set to YES.

Output QS indicates the quality status of the output signal O1 and will be high (1) when the output is of bad quality. Bad quality indicates any hardware failure of the input converter.

Use the block with Ubus Modules - iO-8DI24DMN, 8DI24DSI, 8DI115AMN, 8DI115ASI, 8DI230AMN, and 8DI230ASI.

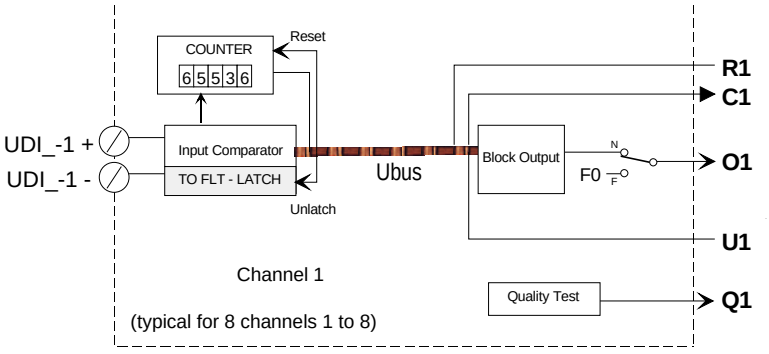

BLOCK DIAGRAM

4.2.100 UDO_ - Universal bus Digital Output (V2.0)

UDO_ function blocks have up to (8) discrete output channels used to turn on remote devices powered from either the module (non-isolated module powered) or an external source (isolated unpowered). A number of i|o module types are available as described in Table 15-1 Model Designation in Section 15 Model Designations and System Specifications.

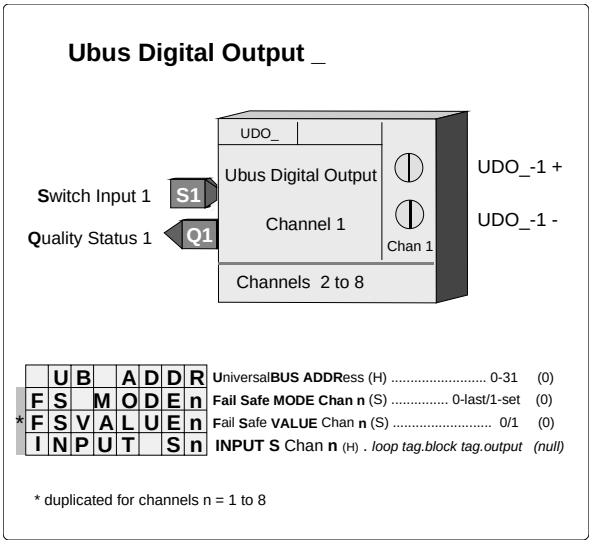

The i|o module has a fail safe mode for each channel. If for any reason the module is not updated by the controller within the prescribed time, the module will enter the fail safe mode. The module can be configured (FS MODEn) to output the last value or a set value (FS VALUEn) while in the failsafe mode

A high at the Quality Status output Q1 can indicate:

- A module is not installed in the configured slot.
- A module of an incorrect type has been installed in the configured slot.
- The module is not communicating with the controller.
- The module is in a failsafe condition.

Use the block with Ubus Modules - iO-8DO60DMN, 8DO60DEI, 8DO250AMN, and 8DO250AEI.

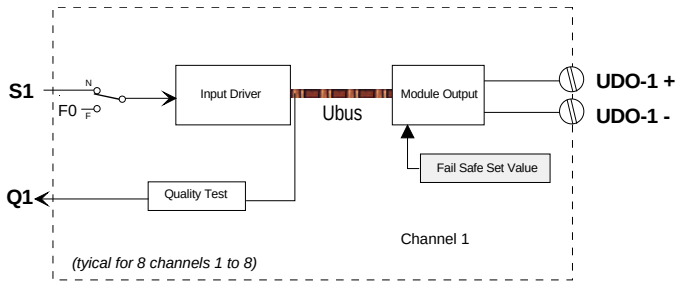

BLOCK DIAGRAM

4.2.101 UEI_ - Universal bus Extended digital Input (V2.0)

UEI_ function blocks can be used to sense (16) discrete signals from external sources and provide block outputs representing the state of these inputs. The block output is high (1) when the input is on and low (0) when off. A number of i|o module types are available as described in Table 15-1 Model Designation in Section 15 Model Designations and System Specifications.

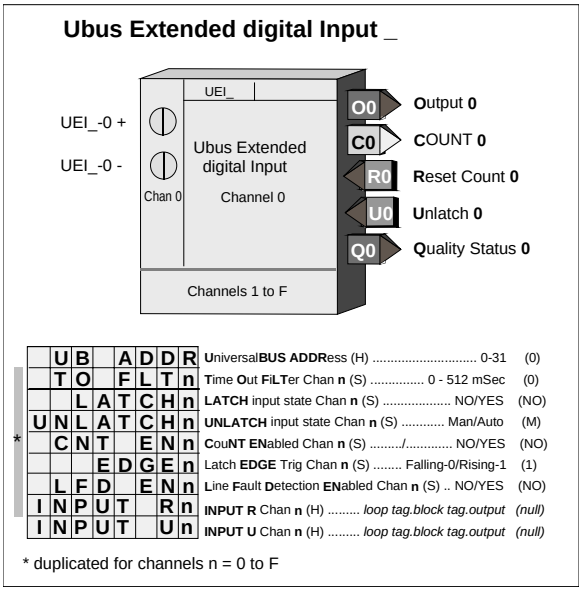

A Time Out Filter can be configured for each channel. The filter provides a delay period allowing the input to settle to a measurable value. When set to 0, the digital input has a bandwidth of 1000 Hz. The TO FLTn can provide a time delay of 2 to 512 ms in 2 ms steps.

A high at the Quality Status output Qn can indicate:

- A module is not installed in the configured slot.
- A module of an incorrect type has been installed in the configured slot.
- The module is not communicating with the controller.
- The LFD EN parameter of the indicated channel is configured to YES and a line fault has been detected.

Each channel can be configured as real time or latched. When LATCHn is set to YES, an input signal that goes high will remain high until the input is unlatched. The UNLATCHn parameter enables the input to be unlatched automatically, each time the controller reads the input on the Universal Bus, or only on the rising edge of the unlatch input Un.

A 16-bit counter is available that totals the number of low frequency pulses received on the input. The maximum pulse rate is 250 Hz when the timeout filter is switched off. When the filter is active the maximum pulse rate will be determined by the timeout period that is configured. When the counter overflows (i.e. > 65536) it rolls over and starts from 0. The block output Cn will provide the count value as a real number when the CNT ENn parameter is set to YES.

Output QS indicates the quality status of the output signal O1 and will be high (1) when the output is of bad quality. Bad quality indicates any hardware failure of the input converter.

Use the block with Ubus Modules - iO-16DI24DMN, and 16DI24DSI.

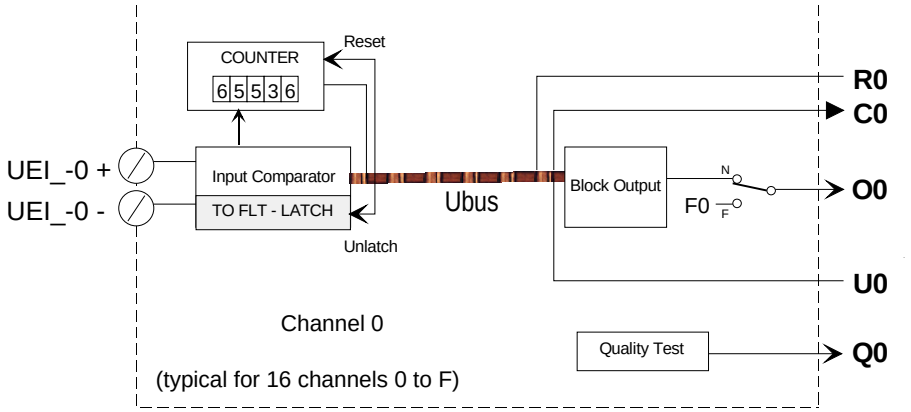

BLOCK DIAGRAM

4.2.102 UER_ - Universal bus Extended RTD Input (V2.3)

UER_ function blocks convert inputs up to (8) RTD or resistance sensors into block outputs that are scaled in engineering units. These outputs are then interconnected to other function blocks within the controller.

Parameters OHM MINn and OHM MAXn are used to establish an input range, in ohms, when the resistance (OHM) sensor is selected (e.g. 0-500Ω). The MIN SCLEn and MAX SCLEn parameters should be configured to the engineering range corresponding to the OHM MINn and OHM MAXn values. When an OHM sensor type is first selected, the OHM MIN and MAX and the MINSCLE and MAXSCLE will default to the operating range end points listed in Table 4-10.

Direct temperature measurements (i.e. RTD) bypass input and range scaling and the block output units are selected from Table 4-10. When selected, the corresponding read only ASCII units will automatically be placed in the ENG UNITS parameter. For an OHM sensor type, the ASCII ENG UNITS can be configured. However, even with the RTD input it is important to enter the actual intended operating range in the units selected for the RTD so that other function blocks, such as the controller, operator faceplate, and workstation interface, can point to this block for range and display information.

Ubus Extended RTD Input

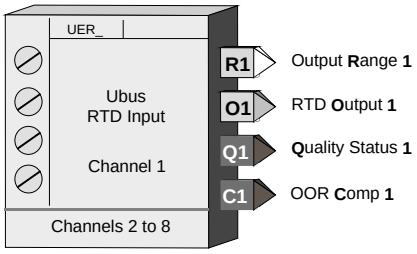

	U	B		A	D	D	R	**U**niversal **B**us **ADDR**ess (H) 0-31	(0)
	D	Z	O	N	E		n	update **D**ead **ZONE** Chan **n** (S) ..... 0.0 to 100.0	(0.5)
S	E	N	T	Y	P	E	n	**SEN**sor **TYPE** Chan **n** (H) ..... (see table)	(5)
O	H	M		M	I	N	n	**OHM MIN** Value Chan **n** (S) ..... (see table)	
O	H	M		M	A	X	n	**OHM MAX** Value Chan **n** (S) ..... (see table)	
D	I	G	F	I	L	T	n	**DIG**ital **FILT**er Chan **n** (S) ..... 0 to 180 sec	(0)
O	U	T	B	I	A	S	n	**OUT**put **BIAS** Chan **n** (S) ..... Real	(0.0)
M	I	N	S	C	L	E	n	**MIN**imum **SCaLE** Chan **n** (H) ..... Real	(0.0)
* M	A	X	S	C	L	E	n	**MAX**imum **SCaLE** Chan **n** (H) ..... Real	(600)
				D	P	P	n	**D**ec. **P**t. **P**os. Chan **n** (S) 0.0.0.0.0.0	0.0
R	T	D	U	N	T	S	n	**RTD UNiTS** Chan **n** (S) 1-degC,2-degF,3-degR,4-K	(1)
E	N	G	U	N	T	S	n	**ENG UNiTS** Chan **n** (S) ..... 6 ASCII Char	(******)
	H	I		O	R	C	n	**HI O**ut of **R**ng **C**omp Chn **n** (S) ..... -25.0 to 125.0%	(101.0)
	L	O		O	R	C	n	**LO O**ut of **R**ng **C**omp Chn **n** (S) ... -25.0 to 125.0%	(-1.0)
O	P	E	N		R	D	n	**OPEN R**TD **D**rive Chan **n** (S).... Off-0/Up-1/Down-2	(1)
T	R	I	M	C	A	L	n	**TRIM CAL** RTD Chan **n** (H) ..... NO/YES	(NO)
T	R	M	Z	E	R	O	n	**TRIM ZERO** cal Chan **n** (H) ..... *(see table)*	
T	R	M	F	U	L	L	n	**TRIM FULL** scale cal Chan **n** (H) ..... (see table)	

* duplicated for channels n = 1 to 8

Ubus Analog Input blocks are available with the 353R controller. These blocks provide simple integration of the corresponding i|o modules into the 353R controller configuration. The DZONE parameter is used to minimize the effects of signal noise on the Universal Bus updating requirements when the variable is in a steady state condition. The variable will always be updated every 10 controller scan cycles regardless of this setting to insure the highest accuracy reading at steady state.

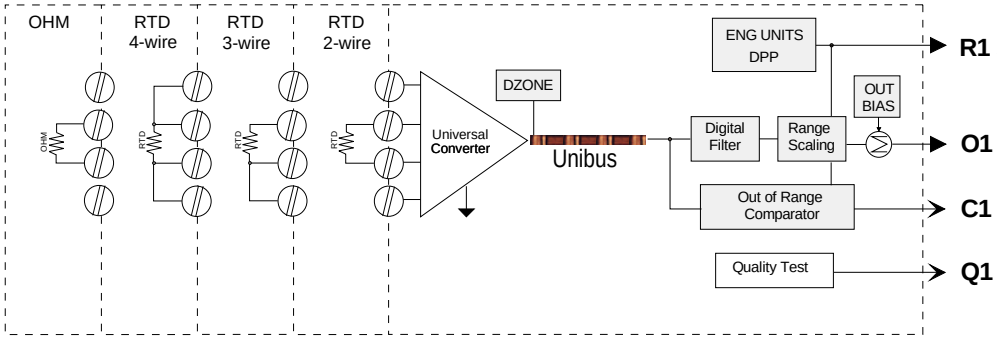

BLOCK DIAGRAM

A digital filter DIG FILT (time constant) is available to dampen process noise. An output bias is also available to add or subtract a value in engineering units to final output. This enables the output to be matched to a reference signal that may be slightly offset due to small sensor differences.

Output Qn indicates the quality of the analog output signal On. It will be high (1) when output On is bad, and low (0) when good. The Qn output will also go high when an open circuit is detected or the input exceeds the operating range defined in Table 4-10. An open circuit can also drive the block output up or down when the OPEN RD parameter is selected as 1 or 2. Also, if the input exceeds the operating range defined in Table 4-10, the output will also drive up or down as defined by the OPEN RD parameter. User settable High and Low signal comparators are also available to identify an input signal that is out of a normal operating range.

All input types are factory calibrated and do not require field calibration. However, for those cases where outputs must be adjusted to meet a local standard, a field calibration trim feature is available to override the factory calibration for the input type selected. The factory calibration is retained so that the input can be returned to the factory calibration at any time by storing 'NO' for the TRIMCAL parameter. Table 4-10 provides the input values that are used to perform a field trim calibration. The full block output with these parameters applied can be viewed in the VIEW mode within loop configuration. During a hot, warm or cold start, the function block will temporarily by-pass the digital filter to enable the output to initialize at the actual hardware input signal.

Use the block with Ubus Module – iO-8RT.

TABLE 4-10 Universal Bus RTD SENsor Type

#	TYPE	DESCRIPTION	OPERATING RANGE	FIELD TRIM CAL POINTS
1	2-wire Ω	Resistance	0 to 110 Ω	0 Ω & 100 Ω
2	2-wire Ω	Resistance	0 to 280 Ω	0 Ω & 250 Ω
3	2-wire Ω	Resistance	0 to 470 Ω	0 Ω & 450 Ω
4	2-wire Ω	Resistance	0 to 2000 Ω	0 Ω & 2000 Ω
5	2-wire Pt 100Ω	DIN 43760/IEC 751 RTD alpha 0.003850	-200°C to 850°C (-328°F to 1562°F)	100Ω (0°C) & 250Ω (408.62°C)
6	2-wire jPt 100Ω	JIS C-1604 RTD alpha 0.003916	-200°C to 650°C (-328°F to 1202°F)	100Ω (0°C) & 250Ω (401.26°C)
7	2-wire Ni 120Ω		-60°C to 250°C (-76°F to 482°F)	
8	2-wire Cu 10Ω	alpha 0.00427	-30°C to 220°C (-22°F to 428°F)	10Ω (25°C) & 15Ω (154.42°C)
9	2-wire Pt 500Ω	DIN 43760/IEC 751 RTD alpha 0.003850	-200°C to 850°C (-328°F to 1562°F)	500Ω (0°C) & 1250Ω (408.62°C)
10	3-wire Pt 100Ω	DIN 43760/IEC 751 RTD alpha 0.003850	-200°C to 850°C (-328°F to 1562°F)	100Ω (0°C) & 250Ω (408.62°C)
11	3-wire jPt 100Ω	JIS C-1604 RTD alpha 0.003916	-200°C to 650°C (-328°F to 1202°F)	100Ω (0°C) & 250Ω (401.26°C)
12	3-wire Ni 120Ω		-60°C to 250°C (-76°F to 482°F)	
13	3-wire Cu 10Ω		-30°C to 220°C (-22°F to 428°F)	10Ω (25°C) & 15Ω (154.42°C)
14	3-wire Pt 500Ω	DIN 43760/IEC 751 RTD alpha 0.003850	-200°C to 850°C (-328°F to 1562°F)	500Ω (0°C) & 1250Ω (408.62°C)
15	4-wire Pt 100Ω	DIN 43760/IEC 751 RTD alpha 0.003850	-200°C to 850°C (-328°F to 1562°F)	100Ω (0°C) & 250Ω (408.62°C)
16	4-wire jPt 100Ω	JIS C-1604 RTD alpha 0.003916	-200°C to 650°C (-328°F to 1202°F)	100Ω (0°C) & 250Ω (401.26°C)
17	4-wire Ni 120Ω		-60°C to 250°C (-76°F to 482°F)	
18	4-wire Cu 10Ω		-30°C to 220°C (-22°F to 428°F)	10Ω (25°C) & 15Ω (154.42°C)
19	2-wire Pt 500Ω	DIN 43760/IEC 751 RTD alpha 0.003850	-200°C to 850°C (-328°F to 1562°F)	500Ω (0°C) & 1250Ω (408.62°C)

4.2.103 UET_ - Universal bus Extended Thermocouple Input (V2.3)

UET_ function blocks convert inputs up to (8) thermocouple or millivolt sensors into block outputs that are scaled in engineering units. These outputs are then interconnected to other function blocks within the controller.

Parameters MV MINn and MV MAXn are used to establish an input range, in millivolt units, when the millivolt sensor is selected (e.g. 0-25 mv). The MIN SCLEn and MAX SCLEn parameters should be configured to the engineering range corresponding to the MV MINn and MV MAXn values. When an MV range is first selected, the MV MIN and MAX and the MINSCLE and MAXSCLE with default to the operating range end points listed in Table 4-11.

Direct temperature measurements (i.e. Thermocouple) bypass input and range scaling and the block output units are selected from Table 4-11. When selected, the corresponding read only ASCII units will automatically be placed in the ENG UNITS parameter. For a MV sensor type the ASCII ENG UNITS can be configured. However, even with the thermocouple input it is important to enter the actual intended operating range in the units selected for the thermocouple so that other function blocks, such as the controller, operator faceplate, and workstation interface, can point to this block for range and display information. The ENGUNTS parameter is used to select the units of the block output On.

Ubus Extended Thermocouple Input

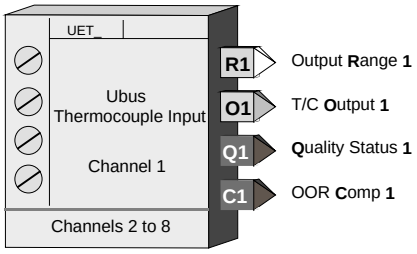

	UB AD DR	Universal Bus ADDRess (H) 0-31 (0)
	DZ ON En	update Dead ZONE Chan n (S) ..... 0.0 to 100.0 (0.5)
	SEN TYP En	SENsor TYPE Chan n (H) ..... (see table) (7)
	MV MIN n	MV MIN Value Chan n (H) ..... (see table)
	MV MAX n	MV MAX Value Chan n (H) ..... (see table)
	DIG FIL Tn	DIGital FILTer Chan n (S) ..... 0 to 180 sec (0)
	OUT BIA Sn	OUTput BIAS Chan n (S) ..... Real (0.0)
	MIN SCL En	MINimum SCaLE Chan n (H) ..... Real (0.0)
	MAX SCL En	MAXimum SCaLE Chan n (H) ..... Real (1100)
*	DP Pn	Dec. Pt. Pos. Chan n (S) 0.0.0.0.0.0 0.0
	TC UNT Sn	T/C UNiTS Chan n (S) ...1-degC,2-degF,3-degR,4-K (1)
	ENG UNT Sn	ENG UNiTS Chan n (S) ..... 6 ASCII Char (******)
	HI ORC n	HI Out of Rng Comp Chn n (S) ... -25.0 to 125.0% (101.0)
	LO ORC n	LO Out of Rng Comp Chn n (S) .. -25.0 to 125.0% (-1.0)
	OPEN TC	OPEN T/C Drive Chan n (H)..... Off-0/UP-1/DN-2 (1)
	COMPEN Sn	T/C COMPENsation Chan n (H) Off-0/ON-1 (1)
	TRIM CAL n	TRIM CAL T/C Chan n (H) ..... NO/YES (NO)
	TRIM ZERO n	TRIM ZERO input Chan n (H) ..... *(see table)*
	TRIM FULL n	TRIM FULL input Chan n (H) ..... (see table)

* duplicated for channels n = 1 to 8

Ubus Thermocouple Input blocks are available with the 353R controller. These blocks provide simple integration of the corresponding i|o modules into the 353R controller configuration. The DZONE parameter is used to minimize the effects of signal noise on the Universal Bus updating requirements when the variable is in a steady state condition. The variable will always be updated every 10 controller scan cycles regardless of this setting to insure the highest accuracy reading at steady state.

A digital filter DIGFILT (time constant) is available to dampen process noise. An output bias OUT BIAS is also available to add or subtract a value in engineering units to final output. This enables the output to be matched to a reference signal that may be slightly offset due to small sensor differences.

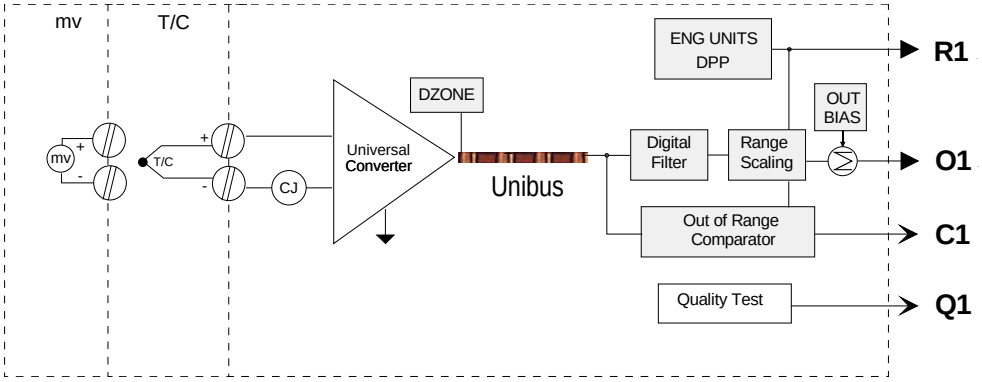

BLOCK DIAGRAM

Output Qn indicates the quality of the analog output signal On, and will be high (1) when output On is bad, and low (0) when good. The Qn output will also go high when an open circuit is detected or the input exceeds the operating range defined in Table 4-11. An open circuit can also drive the block output up or down when the OPEN TC parameter is selected as 1 or 2. Also, if the input exceeds the operating range defined in Table 4-11 the output will also drive up or down as defined by the OPEN RD parameter. User settable High and Low signal comparators are also available to identify an input signal that is out of a normal operating range.

All input types are factory calibrated and do not require field calibration. However, for those cases where outputs must be adjusted to meet a local standard, a field trim calibration feature is available to override the factory calibration for the input type selected. The factory calibration is retained so that the input can be returned to the factory calibration at any time by storing 'NO' for the TRIMCAL parameter. Table 11 provides the input values that are used to perform a field calibration. The full block output with these parameters applied can be viewed in the VIEW mode within loop configuration.

During a hot, warm or cold start, the function block will temporarily by-pass the digital filter to enable the output to initialize at the actual hardware input signal.

Use the block with Ubus Module – iO-8TC.

TABLE 4-11 Universal Bus TC SENsor Type

#	TYPE	DESCRIPTION	OPERATING RANGE	FIELD CAL 'FLD' POINTS
1	MV	Millivolt	-8 to 24 mv	0 & 20 mV
2	MV	Millivolt	-20 to 60 mv	0 & 60 mV
3	MV	Millivolt	-33.3 to 100 mv	0 & 100 mV
4	MV	Millivolt	-100 to 100 mv	-100 & +100 mV
5	B T/C	Type B Thermocouple	0°C to 1820°C (32°F to 3308°F)	800°C & 1600°C
6	E T/C	Type E Thermocouple	-270°C to 1000°C (-454°F to 1832°F)	0°C & 800°C
7	J T/C	Type J Thermocouple	-210°C to 1200°C (-410°F to 2192°F)	0°C & 800°C
8	K T/C	Type K Thermocouple	-270°C to 1372°C (-454°F to 2502°F)	0°C & 1000°C
9	N T/C	Type N Thermocouple	-270°C to 1300°C (-454°F to 2372°F)	0°C & 1000°C
10	R T/C	Type R Thermocouple	-50°C to1768°C (-58°F to 3214°F)	400°C & 1400°C
11	S T/C	Type S Thermocouple	-50°C to 1768°C (-58°F to 3214°F)	400°C & 1400°C
12	T T/C	Type T Thermocouple	-270°C to 400°C (-454°F to 752°F)	-100°C & 300°C
13	W3 T/C	Type D Thermocouple	0°C to 2315°C (32°F to 4199°F)	400°C & 2000°C
14	W5 T/C	Type C Thermocouple	0°C to 2315°C (32°F to 4199°F)	400°C & 2000°C
15	RUS K T/C	Russian Type K Thermocouple	-200°C to 1300°C (-328°F to 2370°F)	0°C & 1000°C
16	RUS L T/C	Russian Type L Thermocouple	-200°C to 800°C (-328°F to 1472°F)	0°C & 600°C

4.2.104 URI_ - Universal bus RTD Input (V2.0)

URI_ function blocks convert inputs from up to (4) RTDs or resistance sensors into block outputs that are scaled in engineering units. These outputs are then interconnected to other function blocks within the controller.

Parameters OHM MINn and OHM MAXn are used to establish an input range, in ohm units, when the resistance (OHM) sensor is selected (e.g. 0-500Ω). The MIN SCLEn and MAX SCLEn parameters should be configured to the engineering range corresponding to the OHM MINn and OHM MAXn values. When an OHM sensor type is first selected, the OHM MIN and MAX and the MINSCLE and MAXSCLE will default to the operating range end points listed in Table 12.

Direct temperature measurements (i.e. RTD) bypass input and range scaling and the block output units are selected from the RTD SENsorTYPE table on the next page. When selected, the corresponding read only ASCII units will automatically be placed in the ENG UNITS parameter. For an OHM sensor type the ASCII ENG UNITS can be configured. However, even with the RTD input it is important to enter the actual intended operating range in the units selected for the RTD so that other function blocks, such as the controller, operator faceplate, and workstation interface, can point to this block for range and display information

Ubus RTD Input

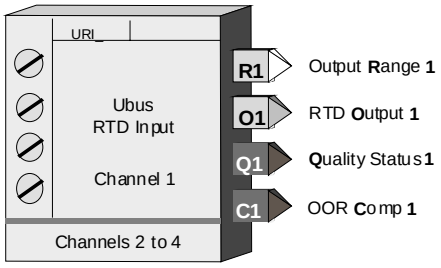

	UBADDRn	Universal Bus ADDRess (H) 0-31	(0)
	DZONEn	update Dead ZONE Chan n (S)..... 0.0 to 100.0	(0.5)
	SENTYPEn	SENsor TYPE Chan n (H) .....See Table	(6)
	OHMMINn	OHM MIN Value Chan n (H) ..... 0 to 500 ohm	(0)
	OHMMAXn	OHM MAX Value Chan n (H) ..... 0 to 500 ohm	(500)
	DIGFILTn	DIGital FILTer Chan n (S) ..... 0 to 180 sec	(0)
	OUTBIASn	OUTput BIAS Chan n (S) ..... Real	(0.0)
	MINSCLEn	MINimum SCaLE Chan n (H) ..... Real	(0.0)
*	MAXSCLEn	MAXimum SCaLE Chan n (H) ..... Real	(600)
	DPPn	Dec. Pt. Pos. Chan n (S) 0.0.0.0.0.0	0.0
	RTDUNTSn	RTD UNiTS Chan n (S) ..1-degC, 2-degF, 3-degR, 4-degK	(1)
	ENGUNTSn	ENG UNiTS Chan n (S) ..... 6 ASCII Char	(*****)
	HIORCn	HI Out of Rng Comp Chn n (S) ..... -25.0 to 125.0%	(101.0)
	LOORCn	LO Out of Rng Comp Chn n (S) ... -25.0 to 125.0%	(-1.0)
	OPENRDn	OPEN RTD Drive Chan n (H).....Off-0/UP-1	(1)
	TRIMCALn	TRIM CAL RTD Chan n (H) ..... NO/YES	(NO)
	TRMZEROn	TRIM ZERO cal Chan n (H) ..... *Table 3.7*	
	TRMFULLn	TRIM FULL scale cal Chan n (H) ..... *Table 3.7*	

* duplicated for channels n = 1 to 4

Ubus Analog Input blocks are available with the 353R controller. These blocks provide simple integration of the corresponding i|o modules into the 353R controller configuration. The DZONE parameter is used to minimize the effects of signal noise on the Universal Bus updating requirements when the variable is in a steady state condition. The variable will always be updated every 10 controller scan cycles regardless of this setting to insure the highest accuracy reading at steady state.

A digital filter DIG FILT (time constant) is available to dampen process noise. An output bias is also available to add or subtract a value in engineering units to the final output. This enables the output to be matched to a reference signal that may be slightly offset due to small sensor differences. Output Qn indicates the quality of the analog output signal On, and will be high (1) when output On is bad, and low (0) when good. High and Low signal comparators are available to identify an input signal that is out of range.

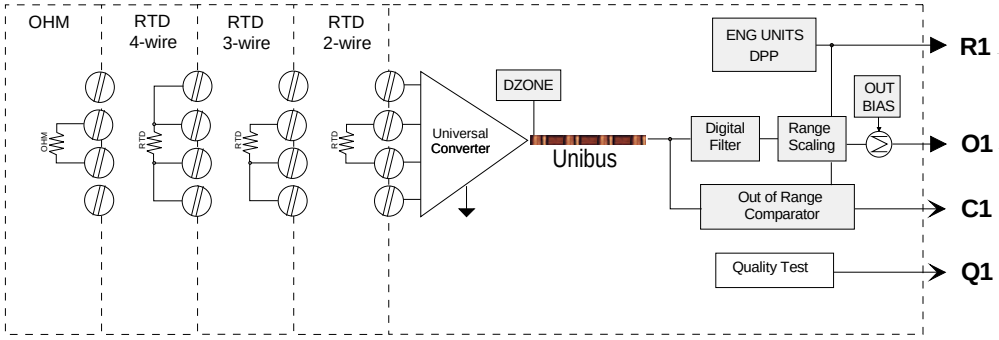

BLOCK DIAGRAM

All input types are factory calibrated and do not require field calibration. However, for those cases where outputs must be adjusted to meet a local standard, a field calibration trim feature is available to override the factory calibration for the input type selected. The factory calibration is retained so that the input can be returned to the factory calibration at any time by storing 'NO' for the TRIMCAL parameter. The table below provides the input values that are used to perform a field trim calibration. The full block output with these parameters applied can be viewed in the VIEW mode within loop configuration.

During a hot, warm or cold start, the function block will temporarily by-pass the digital filter to enable the output to initialize at the actual hardware input signal.

Use the block with Ubus Module - iO-4RT.

TABLE 4-12 Universal Bus RTD SENsor Type

#	TYPE	DESCRIPTION	OPERATING RANGE	FIELD CAL 'FLD' POINTS
1	2-wire Ω	Resistance	0 to 600 Ω	0 Ω & 600 Ω
2	2-wire Pt 100	DIN 43760/IEC 751 RTD alpha 0.003850	-200°C to 850°C (-328°F to 1562°F)	100Ω (0°C) & 250Ω (408.62°C)
3	2-wire jPt 100	JIS C-1604 RTD alpha 0.003916	-200°C to 510°C (-328°F to 950°F)	100Ω (0°C) & 250Ω (401.26°C)
4	2-wire Ni 120		-60°C to 320°C (-76°F to 608°F)	
5	3-wire Ω	Resistance	0 to 600 Ω	0 Ω & 600 Ω
6	3-wire Pt 100	DIN 43760/IEC 751 RTD alpha 0.003850	-200°C to 850°C (-328°F to 1562°F)	100Ω (0°C) & 250Ω (408.62°C)
7	3-wire jPt 100	JIS C-1604 RTD alpha 0.003916	-200°C to 510°C (-328°F to 950°F)	100Ω (0°C) & 250Ω (401.26°C)
8	3-wire Ni 120		-60°C to 320°C (-76°F to 608°F)	
9	4-wire Ω	Resistance	0 to 600 Ω	0 Ω & 600 Ω
10	4-wire Pt 100	DIN 43760/IEC 751 RTD alpha 0.003850	-200°C to 850°C (-328°F to 1562°F)	100Ω (0°C) & 250Ω (408.62°C)
11	4-wire jPt 100	JIS C-1604 RTD alpha 0.003916	-200°C to 510°C (-328°F to 950°F)	100Ω (0°C) & 250Ω (401.26°C)
12	4-wire Ni 120		-60°C to 320°C (-76°F to 608°F)	

4.2.105 USD_ - Universal bus Solenoid Driver (V2.3)

USD_ function blocks have up to (4) discrete output channels used to turn on solenoid using the Intrinsically Safe Solenoid Driver module.

The i|o module has a fail safe mode for each channel. If for any reason the module is not updated by the controller within the prescribed time, the module will enter the fail safe mode. The module can be configured (FS MODEn) to output the last value or a set value (FS VALUEn) while in the fail safe mode.

A high at the Quality Status output Q1 can indicate:

- A module is not installed in the configured slot.
- A module of an incorrect type has been installed in the configured slot.
- The module is not communicating with the controller.
- The LFD EN parameter of the indicated channel is configured to YES and a line fault has been detected.

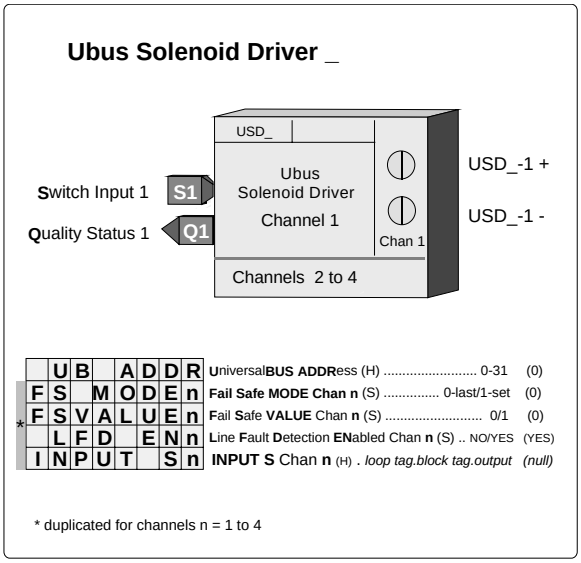

Use the block with Ubus Module – iOS-4DO24DMN. This module was not available at the time this manual was printed.

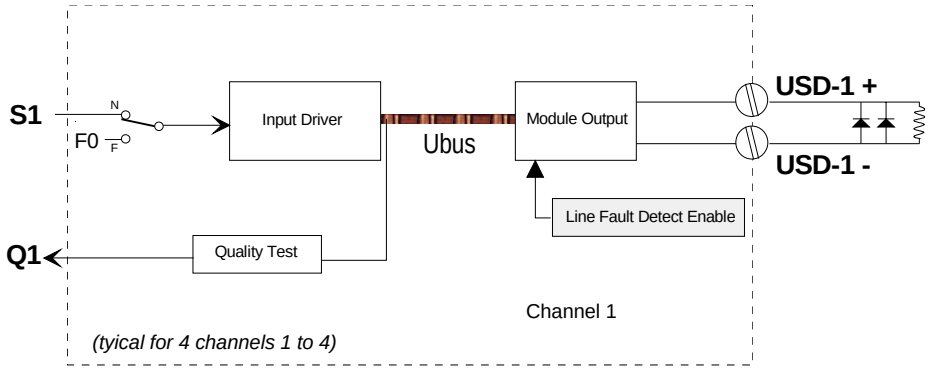

BLOCK DIAGRAM

4.2.106 UTI_ - Universal bus Thermocouple Input (V2.0)

UTI_ function blocks convert inputs from up to (4) thermocouple or millivolt sensors into block outputs that are scaled in engineering units. These outputs are then interconnected to other function blocks within the controller.

Parameters MV MINn and MV MAXn are used to establish an input range, in millivolt units, when the millivolt sensor is selected (e.g. 0-25 mV). The MIN SCLEn and MAX SCLEn parameters should be configured to the engineering range corresponding to the MV MINn and MV MAXn values. When an MV sensor type is first selected, the MV MIN and MAX and the MINSCLE and MAXSCLE will default to the operating range end points listed in Table 13.

Direct temperature measurements (i.e. Thermocouple) bypass input and range scaling and the block output units are selected from the TC/MV SENsor TYPE table on the next page. When selected, the corresponding read only ASCII units will automatically be placed in the ENG UNITS parameter.

For a MV sensor type the ASCII ENG UNITS can be configured. However, even with the thermocouple input, it is important to enter the actual intended operating range in the units selected for the thermocouple so that other function blocks, such as the controller, operator faceplate, and workstation interface, can point to this block for range and display information. The ENGUNTS parameter is used to select the units of the block output On.

Ubus Thermocouple Input

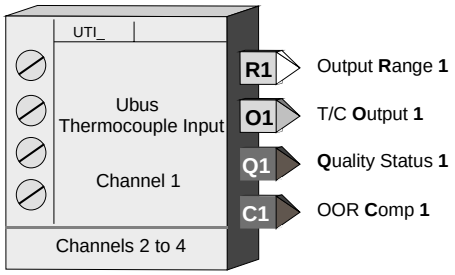

	UBADDR	**U**niversal **B**us **ADDR**ess (H) 0-31 (0)
	DZONEn	update **D**ead **ZONE** Chan **n** (S) ..... 0.0 to 100.0 (0.5)
	SENTYPEn	**SEN**sor **TYPE** Chan **n** (H) ..... *Table 3.9* (4)
	MVMINn	**MV MIN** Value Chan **n** (H) ..... 0 to 120 MV (0.0)
	MVMAXn	**MV MAX** Value Chan **n** (H) ..... 0 to 120 MV (100.0)
	DIGFILTn	**DIG**ital **FILT**er Chan **n** (S) ..... 0 to 180 sec (0)
	OUTBIASn	**OUT**put **BIAS** Chan **n** (S) ..... Real (0.0)
	MINSCLEn	**MIN**imum **SCaLE** Chan **n** (H) ..... Real (0.0)
	MAXSCLEn	**MAX**imum **SCaLE** Chan **n** (H) ..... Real (1100)
*	DPPn	**D**ec. **P**t. **P**os. Chan **n** (S) 0.0.0.0.0.0 0.0
	TC UNTSn	**T/C UNiTS** Chan **n** (S) ...1-degC,2-degF,3-degR,4-K (1)
	ENGUNTSn	**ENG UNiTS** Chan **n** (S) ..... 6 ASCII Char (1)
	HI OR Cn	**HI O**ut of **R**ng **C**omp Chn **n** (S) ... -25.0 to 125.0% (101.0)
	LO OR Cn	**LO O**ut of **R**ng **C**omp Chn **n** (S) .. -25.0 to 125.0% (-1.0)
	OPEN TCn	**OPEN T/C** Drive Chan **n** (H)..... Off-0/UP-1/DN-2 (1)
	COMPENn	T/C **COMPEN**sation Chan **n** (H) Off-0/ON-1 (1)
	TRIM CALn	**TRIM CAL** T/C Chan **n** (H) ..... NO/YES (NO)
	TRIM ZEROn	**TRIM ZERO** input Chan **n** (H) ..... *Table 3.9*
	TRIM FULLn	**TRIM FULL** input Chan **n** (H) ..... *Table 3.9*

* duplicated for channels n = 1 to 4

Ubus Thermocouple Input blocks are available with the 353R controller. These blocks provide simple integration of the corresponding i|o modules into the 353R controller configuration. The DZONE parameter is used to minimize the effects of signal noise on the Universal Bus updating requirements when the variable is in a steady state condition. The variable will always be updated every 10 controller scan cycles regardless of this setting to insure the highest accuracy reading at steady state.

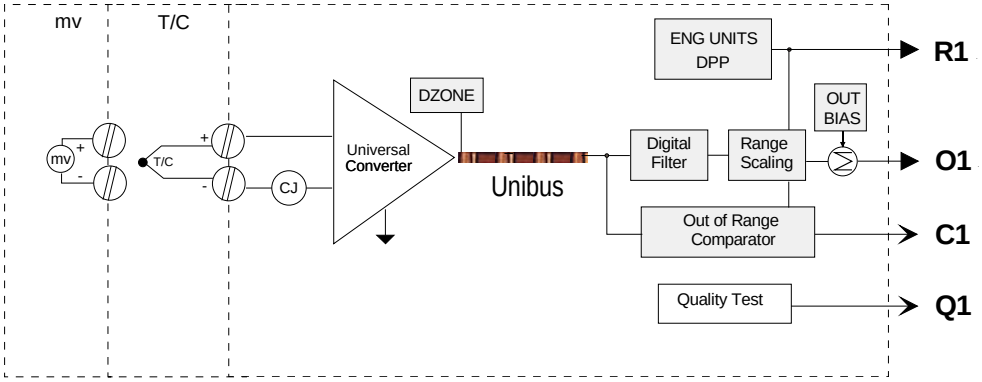

BLOCK DIAGRAM

A digital filter DIGFILT (time constant) is available to dampen process noise. An output bias OUT BIAS is also available to add or subtract a value in engineering units to final output. This enables the output to be matched to a reference signal that may be slightly offset due to small sensor differences. Output Qn indicates the quality of the analog output signal On, and will be high (1) when output On is bad, and low (0) when good. High and Low signal comparators are available to identify an input signal that is out of range.

The input circuitry can be configured to drive the input value upscale or downscale if the input circuit opens. The input signal can be used to trip an out-of-range comparator that can be used to signal an alarm condition or to place a control loop in a stand-by position holding the valve with a fixed output, or for another control strategy as may be needed for individual loop requirements.

All input types are factory calibrated and do not require field calibration. However, for those cases where outputs must be adjusted to meet a local standard, a field trim calibration feature is available to override the factory calibration for the input type selected. The factory calibration is retained so that the input can be returned to the factory calibration at any time by storing 'NO' for the TRIMCAL parameter. The table below provides the input values that are used to perform a field calibration. The full block output with these parameters applied can be viewed in the VIEW mode within loop configuration.

During a hot, warm or cold start, the function block will temporarily by-pass the digital filter to enable the output to initialize at the actual hardware input signal.

Use the block with Ubus Module - iO-4TC.

TABLE 4-13 Universal Bus TC/MV SENsor Type

#	TYPE	DESCRIPTION	OPERATING RANGE	FIELD CAL 'FLD' POINTS
1	MV	Millivolt	-120 to +120 mv	0 & 100 mv
2	B T/C	Type B Thermocouple	-0°C to 1820°C (32°F to 3308°F)	800°C & 1600°C
3	E T/C	Type E Thermocouple	-270°C to 1000°C (-454°F to 1832°F)	0°C & 800°C
4	J T/C	Type J Thermocouple	-210°C to 1200°C (-346°F to 2192°F)	0°C & 800°C
5	K T/C	Type K Thermocouple	-270°C to 1372°C (-454°F to 2502°F)	0°C & 1000°C
6	N T/C	Type N Thermocouple	-270°C to 1372°C (-454°F to 2502°F)	0°C & 1000°C
7	R T/C	Type R Thermocouple	-50°C to1768°C (-58°F to 3214°F)	400°C & 1400°C
8	S T/C	Type S Thermocouple	-50°C to 1768°C (-58°F to 3214°F)	400°C & 1400°C
9	T T/C	Type T Thermocouple	-270°C to 400°C (-454°F to 752°F)	-100°C & 300°C
10	W3 T/C	Type D Thermocouple	0°C to 2315°C (32°F to 4199°F)	400°C & 2000°C
11	W5 T/C	Type C Thermocouple	0°C to 2315°C (32°F to 4199°F)	400°C & 2000°C

4.2.107 XOR_ - Exclusive OR Logic

XOR_ function blocks perform a logical exclusive OR function on all three inputs. An unused input will cause the block to function as a two input XOR. The XOR output will be low (0) when all configured inputs are low (0) or when all configured inputs are high (1).

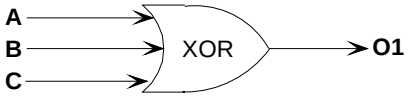

X03136S0

XOR TRUTH TABLE			
A	**B**	**C**	**Output 1**
0	0	0	0
0	0	1	1
0	1	0	1
0	1	1	1
1	0	0	1
1	0	1	1
1	1	0	1
1	1	1	0

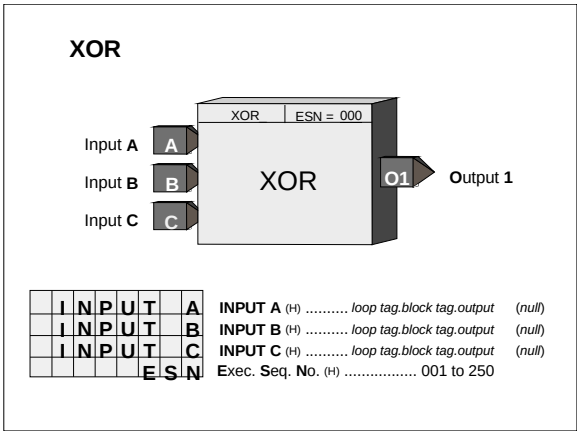

■

5.0 FACTORY CONFIGURED OPTIONS

Factory Configured Options provide an easy way to configure a 353R. In most cases a Factory Configured Option (FCO) will provide a complete, functional loop controller, once the proper I/O connections are made. Changes can be made to an FCO to meet individual requirements. The FCO listings on the following pages document the parameters that are different than the default values listed earlier in this manual. Some things to keep in mind when making changes are:

a) All analog signals have been configured for an engineering range of 0.00 to 100.00. In most cases converting to other engineering units will only require changing the range at the source (e.g. Analog Input function block). All other blocks (i.e. Controller, Operator Display, Alarm, and Setpoint) that require knowledge of the range have range pointers that point to the signal source (e.g. Analog Input block) for this information.

b) A number of function blocks have parameters that may be affected by range pointers. The range pointer limits the setting of parameter values to within -10% to 110% of the range. If a range is changed, the current parameter values will be changed to the same % within the new range. For example, if the range is 0.0-100.0 and the Alarm 1 Limit setting is 90.0 and the range is changed to 400.0-500.0 the alarm setting will be changed to 490.0.

c) All controller (ID, PID, PD, PIDAG) outputs have an engineering range of 0.0-100.0 which will be satisfactory in most cases since outputs normally convert to a 4-20 mA signal to drive a valve 0-100% Open or Closed. However, when a controller is used in a cascade configuration, the primary controller output must be configured for the same engineering range as the secondary controller process.

d) FCOs do not change Station parameters or calibration.

e) FCO 0 deletes all loops and set all parameters in the STATN & SECUR function blocks to default values. Calibration is not affected. As new loops and function blocks are added, parameters will appear at default values.

5.1 FCO101 - SINGLE LOOP CONTROLLER W/ TRACKING SETPOINT

Factory Configured Option FCO101 provides a single loop controller configured in Loop01. A block diagram of the loop configuration is shown below along with any *changes* to the default parameter values of the configured blocks. This configuration provides setpoint tracking which will cause the setpoint to track the process when the loop is not in Auto (NA). If the loop tag 'Loop01' is changed, all configured references within the station will automatically be changed to the new tag.

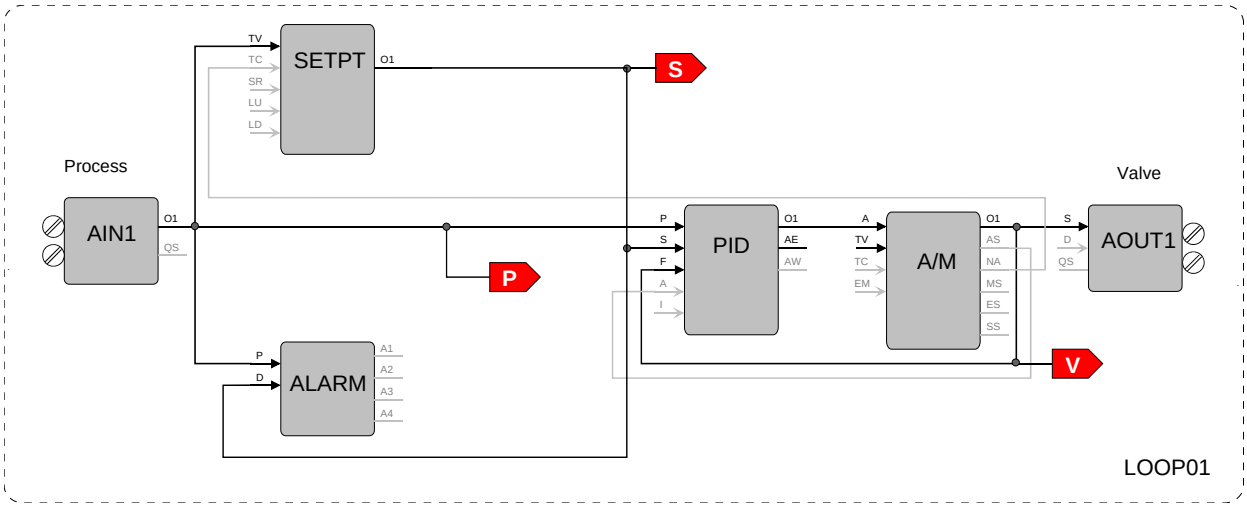

SETPT - Setpoint Function Block
RG PTR - Range Pointer ---------- Loop01.AIN1.OR
INPUT TV - Input TV ---------- Loop01.AIN1.O1
INPUT TC - Input TC ---------- Loop01.A/M.NA
ESN - Exec. Seq. No.---------- 5

ALARM - Alarm Function Block
RG PTR - Range Pointer ---------- Loop01.AIN1.OR
INPUT P - Input P ---------- Loop01.AIN1.O1
INPUT D - Input D ---------- Loop01.SETPT.O1
ESN - Exec. Seq. No. ---------- 10

PID - PID Controller Function Block
RG PTR - Range Pointer --------- Loop01.AIN1.OR
INPUT P - Input P ---------- Loop01.AIN1.O1
INPUT S - Input S ---------- Loop01.SETPT.O1
INPUT F - Input F ---------- Loop01.A/M.O1
INPUT A - Input A ---------- Loop01.A/M.AS
ESN - Exec. Seq. No.---------- 15

A/M - Auto/Manual Function Block
RG PTR - Range Pointer ---------- Loop01.PID.OR
INPUT A - Input A ---------- Loop01.PID.O1
ESN - Exec. Seq. No. ---------- 20

AOUT1 - Analog Output 1 Function Block
RG PTR - Range Pointer ---------- Loop01.PID.OR
INPUT S - Input S ---------- Loop01.A/M.O1

ODC - Operator Display for Controllers
P RG PTR - P Range Pointer ------- Loop01.AIN1.OR
V RG PTR - V Range Pointer ------ Loop01.PID.OR
INPUT P - Input P (Process) ------- Loop01.AIN1.O1
INPUT S - Input S (Setpoint) ------ Loop01.SETPT.O1
INPUT V - Input V (Valve) -------- Loop01.A/M.O1
LOOP #- Loop # ------- 01

5.2 FCO102 - SINGLE LOOP CONTROLLER W/ FIXED SETPOINT

Factory Configured Option FCO102 provides a single loop controller configured in Loop01. A block diagram of the loop configuration is shown below along with any *changes* to the default parameter values of the configured blocks. If the loop tag 'Loop01' is changed, all configured references within the station will automatically be changed to the new tag.

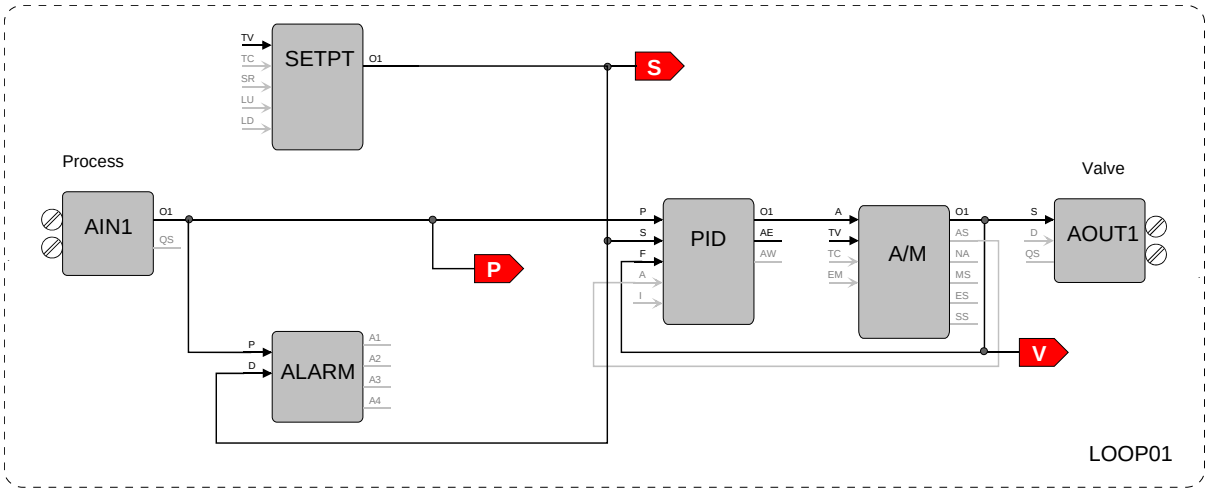

SETPT - Setpoint Function Block
RG PTR - Range Pointer ---------- Loop01.AIN1.OR
ESN - Exec. Seq. No.---------- 5

ALARM - Alarm Function Block
RG PTR - Range Pointer ---------- Loop01.AIN1.OR
INPUT P - Input P ---------- Loop01.AIN1.O1
INPUT D - Input D ---------- Loop01.SETPT.O1
ESN - Exec. Seq. No. ---------- 10

PID - PID Controller Function Block
RG PTR - Range Pointer --------- Loop01.AIN1.OR
INPUT P - Input P ---------- Loop01.AIN1.O1
INPUT S - Input S ---------- Loop01.SETPT.O1
INPUT F - Input F ---------- Loop01.A/M.O1
INPUT A - Input A ---------- Loop01.A/M.AS
ESN - Exec. Seq. No.---------- 15

A/M - Auto/Manual Function Block
RG PTR - Range Pointer ---------- Loop01.PID.OR
INPUT A - Input A ---------- Loop01.PID.O1
ESN - Exec. Seq. No. ---------- 20

AOUT1 - Analog Output 1 Function Block
RG PTR - Range Pointer ---------- Loop01.PID.OR
INPUT S - Input S ---------- Loop01.A/M.O1

ODC - Operator Display for Controllers
P RG PTR - P Range Pointer ------- Loop01.AIN1.OR
V RG PTR - V Range Pointer ------ Loop01.PID.OR
INPUT P - Input P (Process) ------- Loop01.AIN1.O1
INPUT S - Input S (Setpoint) ------ Loop01.SETPT.O1
INPUT V - Input V (Valve) -------- Loop01.A/M.O1
LOOP # - Loop # ------- 01

5.3 FCO103 - EXTERNAL SET CONTROLLER WITH TRACKING LOCAL SETPOINT (V1.30)

Factory Configured Option FCO103 provides a single loop controller with external setpoint configured in Loop01. A block diagram of the loop configuration is shown below along with any *changes* to the default parameter values of the configured blocks. This configuration provides setpoint tracking. If a fixed setpoint is desired, the TC input to the SETPT function block can be set to UNCONFIG. If the loop tag 'LOOP01' is changed, all configured references will automatically be changed to the new tag.

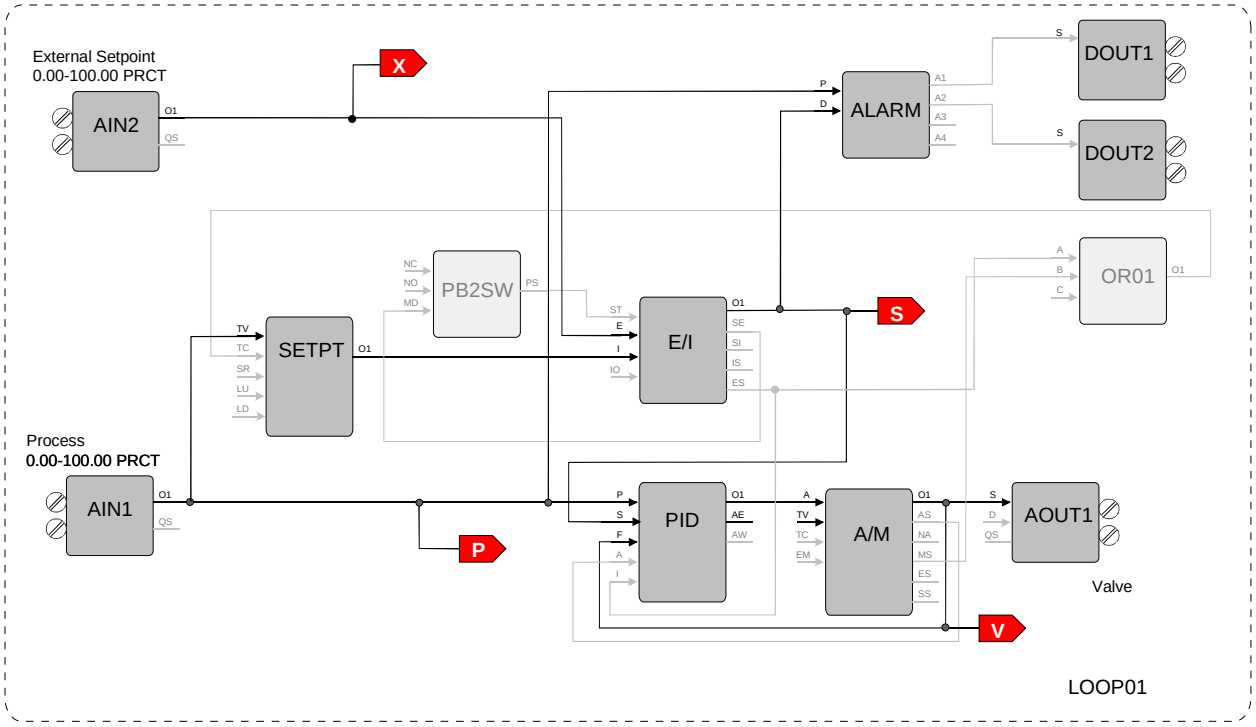

SETPT - Setpoint Function Block
RG PTR - Range Pointer ------ Loop01.AIN1.OR
INPUT TV - Input TV --------- Loop01.AIN1.O1
INPUT TC - Input TC --------- Loop01.OR01.O1
ESN - Exec. Seq. No.---------- 10

PB2SW - PB2 Switch Function Block
INPUT MD - Input MD ------- Loop01.E/I.SE
ESN - Exec. Seq. No. ---------- 5

ALARM - Alarm Function Block
RG PTR - Range Pointer ------ Loop01.AIN1.OR
INPUT P - Input P ---------- Loop01.AIN1.O1
INPUT D - Input D ---------- Loop01.E/I.O1
ESN - Exec. Seq. No. ---------- 20

PID - PID Controller Function Block
RG PTR - Range Pointer ---------- Loop01.AIN1.OR
INPUT P - Input P ---------- Loop01.AIN1.O1
INPUT S - Input S ---------- Loop01.E/I.O1
INPUT F - Input F ---------- Loop01.A/M.O1
INPUT A - Input A ---------- Loop01.A/M.AS
INPUT I - Input I ---------- Loop01.E/I.ES
ESN - Exec. Seq. No.---------- 25

E/I - Ext/Int Transfer Switch Function Block
INPUT ST - Input ST ---------- Loop01.PB2SW.PS
INPUT E - Input E ---------- Loop01.AIN2.O1
INPUT I - Input I ---------- Loop01.SETPT.O1
ESN - Exec. Seq. No. ---------- 15

A/M - Auto/Manual Function Block
RG PTR - Range Pointer ---------- Loop01.PID.OR
INPUT A - Input A ---------- Loop01.PID.O1
ESN - Exec. Seq. No. ---------- 30

OR01 - OR Function Block
INPUT A - Input A ---------- Loop01.E/I.ES
INPUT B - Input B ---------- Loop01.A/M.MS
ESN - Exec. Seq. No. ---------- 35

AOUT1 - Analog Output 1 Function Block
RG PTR - Range Pointer ---------- Loop01.PID.OR
INPUT S - Input S ---------- Loop01.A/M.O1

ODC - Operator Display for Controllers
P RG PTR - P Range Pointer ------ Loop01.AIN1.OR
V RG PTR - V Range Pointer ----- Loop01.PID.OR
X RG PTR - X Range Pointer ----- Loop01.AIN2.OR
INPUT P - Input P (Process) ------ Loop01.AIN1.O1
INPUT S - Input S (Setpoint) ----- Loop01.E/I.O1
INPUT V - Input V (Valve) ------- Loop01.A/M.O1
INPUT X - Input X (X-Variable) - Loop01.AIN2.O1
LOOP # - Loop # ----- 01

DOUT1 - Digital Output 1 Function Block
INPUT S - Input S ---------- Loop01.ALARM.A1

DOUT2 - Digital Output 2 Function Block
INPUT S - Input S ---------- Loop01.ALARM.A2

5.4 FCO104 - EXTERNAL SET CONTROLLER WITH NON-TRACKING LOCAL SETPOINT (V1.30)

Factory Configured Option FCO104 provides a single loop controller with external setpoint configured in Loop01. A block diagram of the loop configuration is shown below along with any *changes* to the default parameter values of the configured blocks. If the loop tag 'LOOP01' is changed, all configured references will automatically be changed to the new tag.

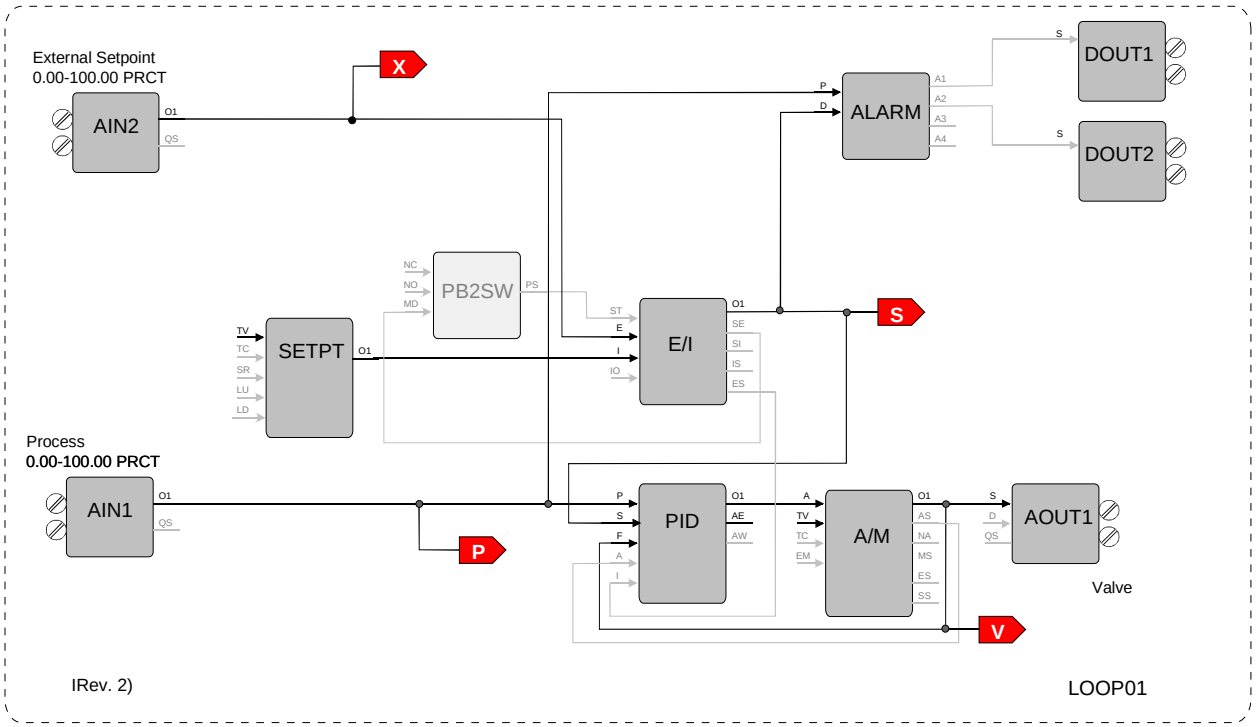

PB2SW - PB2 Switch Function Block
INPUT MD - Input MD ------- Loop01.E/I.SE
ESN - Exec. Seq. No. ---------- 5

ALARM - Alarm Function Block
RG PTR - Range Pointer ------- Loop01.AIN1.OR
INPUT P - Input P ---------- Loop01.AIN1.O1
INPUT D - Input D ---------- Loop01.E/I.O1
ESN - Exec. Seq. No. ---------- 20

PID - PID Controller Function Block
RG PTR - Range Pointer ---------- Loop01.AIN1.OR
INPUT P - Input P ---------- Loop01.AIN1.O1
INPUT S - Input S ---------- Loop01.E/I.O1
INPUT F - Input F ---------- Loop01.A/M.O1
INPUT A - Input A ---------- Loop01.A/M.AS
INPUT I - Input I ---------- Loop01.E/I.ES
ESN - Exec. Seq. No.---------- 25

E/I - Ext/Int Transfer Switch Function Block
INPUT ST - Input ST ---------- Loop01.PB2SW.PS
INPUT E - Input E ---------- Loop01.AIN2.O1
INPUT I - Input I ---------- Loop01.SETPT.O1
ESN - Exec. Seq. No. ---------- 15

A/M - Auto/Manual Function Block
RG PTR - Range Pointer ---------- Loop01.PID
INPUT A - Input A ---------- Loop01.PID.O1
ESN - Exec. Seq. No. ---------- 30

SETPT - Setpoint Function Block
RG PTR - Range Pointer ---------- Loop01.AIN1.OR
ESN - Exec. Seq. No. ---------- 10

AOUT1 - Analog Output 1 Function Block
RG PTR - Range Pointer ---------- Loop01.PID
INPUT S - Input S ---------- Loop01.A/M.O1

ODC-Operator Display for Controllers
P RG PTR – P Range Pointer ---- Loop01.AIN1.OR
V RG PTR – V Range Pointer --- Loop01.PID.OR
X RG PTR – X Range Pointer --- Loop01.AIN2.OR
INPUT P – Input P (Process) ----- Loop01.AIN1.O1
INPUT S – Input S (Setpoint) ---- Loop01.E/I.O1
INPUT V – Input V (Valve) ------ Loop01.A/M.O1
INPUT X p Input X (X-Variable)-Loop01.AIN2.O1
Loop# - Loop # ----01

DOUT1 – Digital Output 1 Function Block
INPUT S – Input 2 ---------- Loop01.ALARM.A1

DOUT2 – Digital Output 2 Function Block
INPUT S – Input S ---------- Loop01.ALARM.A2

5.5 FCO105 - RATIO SET CONTROL W/ OPERATOR SETPOINT LIMITS

Factory Configured Option FCO105 provides a ratio set controller in Loop01. The setpoint to the Captive Flow controller can be maintained as a ratio of the Captive Flow to Wild Flow. The controller has complete setpoint tracking as well as ratio tracking. The local setpoint will track the Captive Flow signal when the loop is not in auto (NA) OR is in External (Ratio) Set (ES). The value of the RATIO will be computed as Captive Flow $_{setpoint}$ / Wild Flow while in the tracking mode which occurs whenever the loop is not in auto (NA) OR is in Internal Set (IS). The tracking features can be removed by setting the TC inputs to UNCONFIG. The Wild Flow signal will be displayed on Variable X and the actual Ratio CF/WF will be displayed on Variable Y.

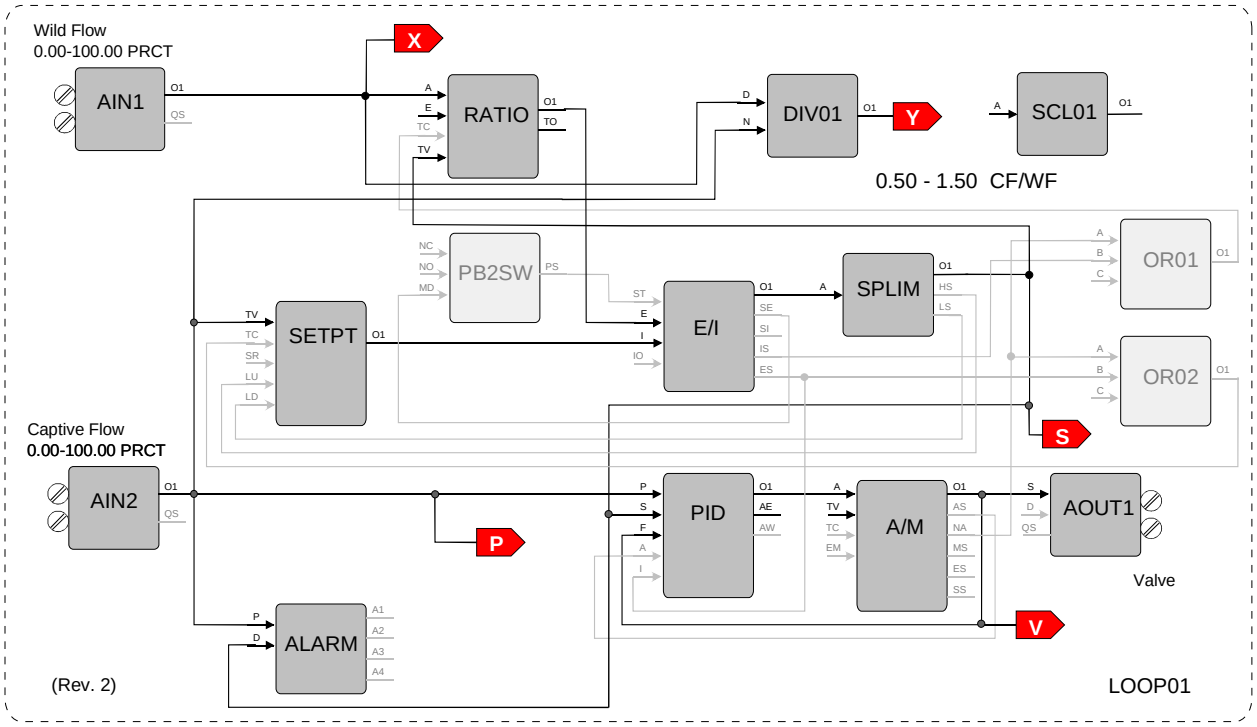

SETPT - Setpoint Function Block
RG PTR - Range Pointer ------ Loop01.AIN2.OR
INPUT TV - Input TV --------- Loop01.AIN2.O1
INPUT TC - Input TC --------- Loop01.OR02.O1
INPUT LU - Input LU --------- Loop01.SPLIM.HS
INPUT LD - Input LD --------- Loop01.SPLIM.LS
ESN - Exec. Seq. No.---------- 5

PB2SW - PB2 Switch Function Block
INPUT MD - Input MD ------- Loop01.E/I.SE
ESN - Exec. Seq. No. ---------- 10

ALARM - Alarm Function Block
RG PTR - Range Pointer ------- Loop01.AIN2.OR
INPUT P - Input P ------------- Loop01.AIN2.O1
INPUT D - Input D ------------- Loop01.SPLIM.O1
ESN - Exec. Seq. No. ---------- 15

RATIO - Ratio Function Block
HI LIMIT - HI Range LIMIT ----- 1.50
LO LIMIT - LO Range LIMIT ---- 0.50
INPUT A - Input A ----------- Loop01.AIN1.O1
INPUT TC - Input TC ---------- Loop01.OR01.O1
INPUT TV - Input TV ---------- Loop01.SPLIM.O1
ESN - Exec. Seq. No.---------- 20

E/I - Ext/Int Transfer Switch Function Block
INPUT ST - Input ST ---------- Loop01.PB2SW.PS
INPUT E - Input E ----------- Loop01.RATIO.O1
INPUT I - Input I ----------- Loop01.SETPT.O1
ESN - Exec. Seq. No. ---------- 25

SPLIM - Setpoint Limit Function Block
RG PTR - Range Pointer ---------- Loop01.AIN2.OR
INPUT A - Input A ----------- Loop01.E/I.O1
ESN - Exec. Seq. No. ---------- 30

PID - PID Controller Function Block
RG PTR - Range Pointer ---------- Loop01.AIN2.OR
INPUT P - Input P ---------- Loop01.AIN2.O1
INPUT S - Input S ---------- Loop01.SPLIM.O1
INPUT F - Input F ---------- Loop01.A/M.O1
INPUT A - Input A ---------- Loop01.A/M.AS
INPUT I - Input I ---------- Loop01.E/I.ES
ESN - Exec. Seq. No.---------- 35

A/M - Auto/Manual Function Block
RG PTR - Range Pointer ---------- Loop01.PID.OR
INPUT A - Input A ---------- Loop01.PID.O1
ESN - Exec. Seq. No. ---------- 40

AOUT1 - Analog Output 1 Function Block
RG PTR - Range Pointer ---------- Loop01.PID.OR
INPUT S - Input S ---------- Loop01.A/M.O1

ODC - Operator Display for Controllers
P RG PTR - P Range Pointer ------ Loop01.AIN2.OR
V RG PTR - V Range Pointer ----- Loop01.PID.OR
X RG PTR - X Range Pointer ----- Loop01.AIN1.OR
Y RG PTR - Y Range Pointer ----- Loop01.SCL01.OR
INPUT P - Input P (Process) ------ Loop01.AIN2.O1
INPUT S - Input S (Setpoint) ----- Loop01.SPLIM.O1
INPUT V - Input V (Valve) ------- Loop01.A/M.O1
INPUT X - Input X (X-Variable) - Loop01.AIN1.O1
INPUT Y - Input Y (Y-Variable)-- Loop01.DIV01.O1
LOOP # - Loop # ----- 01

DIV01 - Division Function Block
INPUT N - Input N ---------- Loop01.AIN2.O1
INPUT D - Input D ---------- Loop01.AIN1.O1
ESN - Exec. Seq. No. ---------- 45

SCL01 - Scaler Function Block
MINSCALE - Output MIN ---------- 0.50
MAXSCALE - Output MAX --------- 1.50
ENGUNITS - ENGineering UNITS ---CF/WF
ESN - Exec. Seq. No. ---------- 50

OR01 - OR Function Block
INPUT A - Input A ---------- Loop01.A/M.NA
INPUT B - Input B ---------- Loop01.E/I.IS
ESN - Exec. Seq. No. ---------- 55

OR02 - OR Function Block
INPUT A - Input A ---------- Loop01.A/M.NA
INPUT B - Input B ---------- Loop01.E/I.ES
ESN - Exec. Seq. No. ---------- 60

5.6 FCO106 - SINGLE LOOP CONTROLLER W/ OPERATOR SETPOINT LIMITS

Factory Configured Option FCO106 provides a single loop controller configured in Loop01. This is similar to FCO101 but with a SPLIM block added to the output of the SETPT block. A block diagram of the loop configuration is shown below along with any *changes* to the default parameter values of the configured blocks. This configuration provides setpoint tracking. If a fixed setpoint is desired, the TC input to the SETPT function block can be set to UNCONFIG. If the loop tag 'LOOP01' is changed, all configured references will automatically be changed to the new tag.

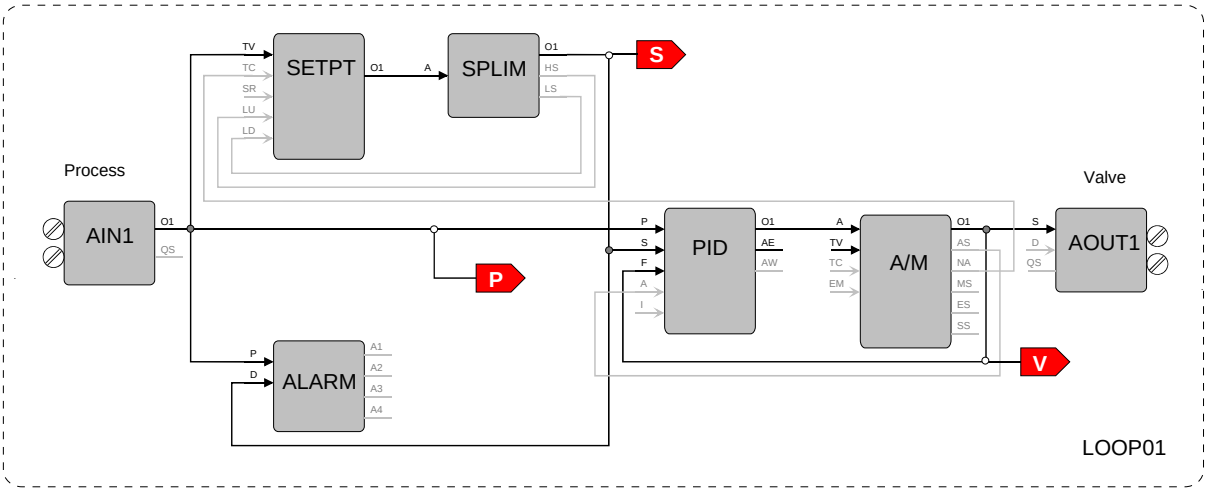

SETPT - Setpoint Function Block
RG PTR - Range Pointer ---------- Loop01.AIN1.OR
INPUT TV - Input TV ---------- Loop01.AIN1.O1
INPUT TC - Input TC ---------- Loop01.A/M.NA
INPUT LU - Input LU ---------- Loop01.SPLIM.HS
INPUT LD - Input LD ---------- Loop01.SPLIM.LS
ESN - Exec. Seq. No.---------- 5

SPLIM - Setpoint Limit Function Block
RG PTR - Range Pointer ---------- Loop01.AIN1.OR
INPUT A - Input A ---------- Loop01.SETPT.O1
ESN - Exec. Seq. No. ---------- 10

ALARM - Alarm Function Block
RG PTR - Range Pointer ---------- Loop01.AIN1.OR
INPUT P - Input P ---------- Loop01.AIN1.O1
INPUT D - Input D ---------- Loop01.SPLIM.O1
ESN - Exec. Seq. No. ---------- 15

PID - PID Controller Function Block
RG PTR - Range Pointer ---------- Loop01.AIN1.OR
INPUT P - Input P ---------- Loop01.AIN1.O1
INPUT S - Input S ---------- Loop01.SPLIM.O1
INPUT F - Input F ---------- Loop01.A/M.O1
INPUT A - Input A ---------- Loop01.A/M.AS
ESN - Exec. Seq. No.---------- 20

A/M - Auto/Manual Function Block
RG PTR - Range Pointer ---------- Loop01.PID.OR
INPUT A - Input A ---------- Loop01.PID.O1
ESN - Exec. Seq. No. ---------- 25

AOUT1 - Analog Output 1 Function Block
RG PTR - Range Pointer ---------- Loop01.PID.OR
INPUT S - Input S ---------- Loop01.A/M.O1

ODC - Operator Display for Controllers
P RG PTR - P Range Pointer ------ Loop01.AIN1.OR
V RG PTR - V Range Pointer ----- Loop01.PID.OR
INPUT P - Input P (Process) ------- Loop01.AIN1.O1
INPUT S - Input S (Setpoint) ------ Loop01.SPLIM.O1
INPUT V - Input V (Valve) -------- Loop01.A/M.O1
LOOP # - Loop # ------- 01

5.7 FCO107 - DUAL LOOP CONTROLLER (V1.30)

Factory Configured Option FCO107 provides two independent loops with tracking setpoints. The block diagram of the configuration of the two loops is shown below along with the *changes* made to the default parameter values of the configured blocks. This configuration provides setpoint tracking. If a fixed setpoint is desired, the TC input to the SETPT function block can be set to UNCONFIG. The process range of the first loop can be changed in Analog Input 1 and the range of the Second loop in Analog Input 2.

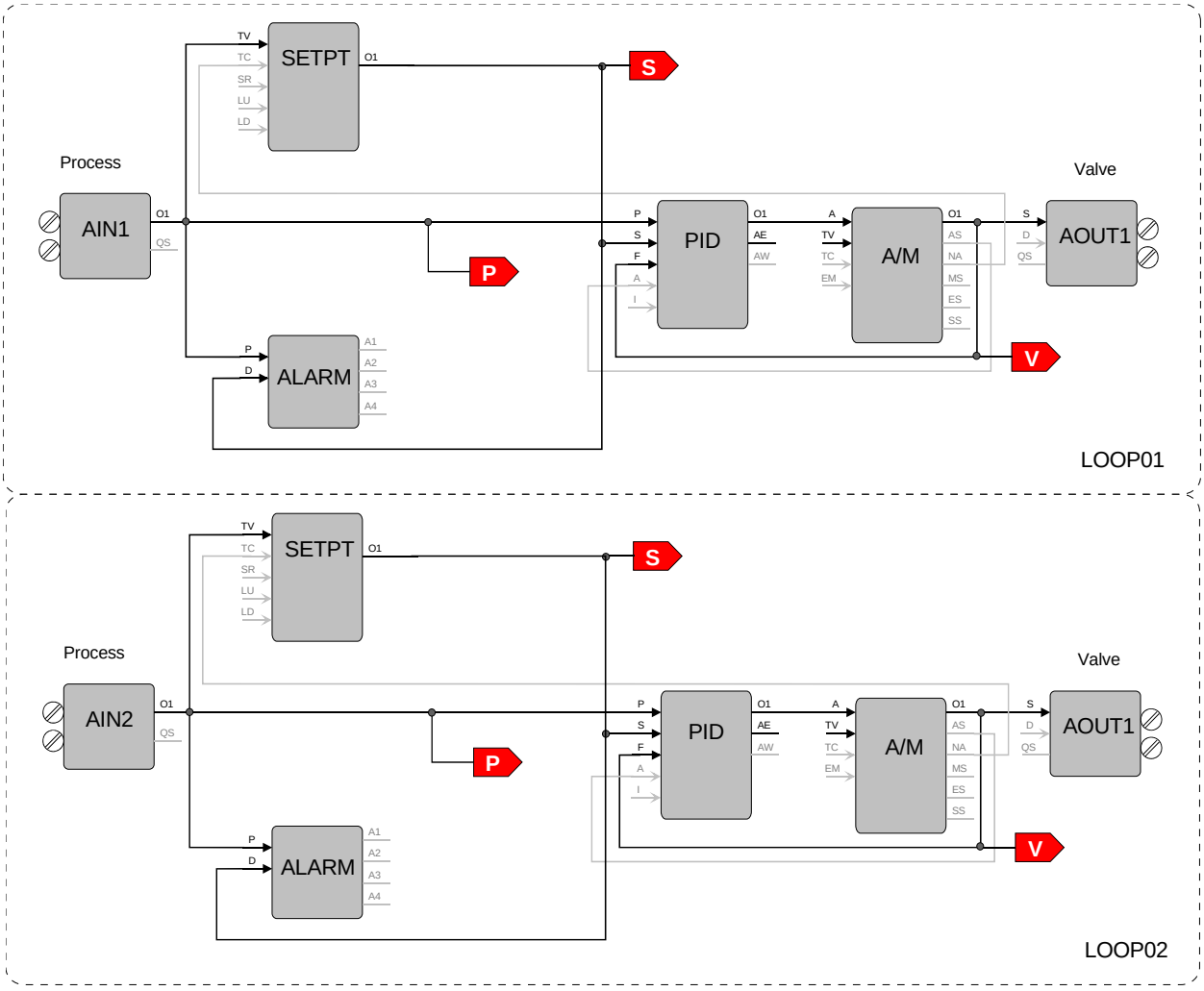

Loop 01

SETPT - Setpoint Function Block
RG PTR - Range Pointer --------- LOOP01.AIN1.OR
INPUT TV - Input TV ------------ LOOP01.AIN1.O1
INPUT TC - Input TC ------------ LOOP01.A/M.NA
ESN - Exec. Seq. No.------------ 5

ALARM - Alarm Function Block
RG PTR - Range Pointer -------- LOOP01.AIN1.OR
INPUT P - Input P ---------- LOOP01.AIN1.O1
INPUT D - Input D ---------- LOOP01.SETPT.O1
ESN - Exec. Seq. No. ---------- 10

PID - PID Controller Function Block
RG PTR - Range Pointer --------- LOOP01.AIN1.OR
INPUT P - Input P ---------- LOOP01.AIN1.O1
INPUT S - Input S ---------- LOOP01.SETPT.O1
INPUT F - Input F ---------- LOOP01.A/M.O1
INPUT A - Input A ---------- LOOP01..A/M.AS
ESN - Exec. Seq. No.---------- 15

A/M - Auto/Manual Function Block
RG PTR - Range Pointer -------- LOOP01.PID.OR
INPUT A - Input A ---------- LOOP01.PID.O1
ESN - Exec. Seq. No. ---------- 20

Loop 01 (cont)

ODC - Operator Display for Controllers
P RG PTR - P Range Pointer ----- LOOP01.AIN1.OR
V RG PTR - V Range Pointer ---- LOOP01.PID.OR
INPUT P - Input P (Process) ----- LOOP01.AIN1.O1
INPUT S - Input S (Setpoint) ---- LOOP01.SETPT.O1
INPUT V - Input V (Valve) ------ LOOP01.A/M.O1
LOOP # - Loop# ----- 01

AOUT1 - Analog Output 1 Function Block
RG PTR - Range Pointer ---------- LOOP01.PID.OR
INPUT S - Input S ---------- LOOP01.A/M.O1

Loop 02

SETPT - Setpoint Function Block
RG PTR - Range Pointer ------- LOOP02.AIN2.OR
INPUT TV - Input TV ---------- LOOP02.AIN2.O1
INPUT TC - Input TC ---------- LOOP02.A/M.NA
ESN - Exec. Seq. No.---------- 5

ALARM - Alarm Function Block
RG PTR - Range Pointer ------ LOOP02.AIN2.OR
INPUT P - Input P ---------- LOOP02.AIN2.O1
INPUT D - Input D ---------- LOOP02.SETPT.O1
ESN - Exec. Seq. No. --------- 10

PID - PID Controller Function Block
RG PTR - Range Pointer -------- LOOP02.AIN2.OR
INPUT P - Input P ---------- LOOP02.AIN2.O1
INPUT S - Input S ---------- LOOP02.SETPT.O1
INPUT F - Input F ---------- LOOP02.A/M.O1
INPUT A - Input A ---------- LOOP02.A/M.AS
ESN - Exec. Seq. No.---------- 15

A/M - Auto/Manual Function Block
RG PTR - Range Pointer ---------- LOOP02.PID.OR
INPUT A - Input A ---------- LOOP02.PID.O1
ESN - Exec. Seq. No. ---------- 20

ODC - Operator Display for Controllers
P RG PTR - P Range Pointer ---- LOOP02.AIN2.OR
V RG PTR - V Range Pointer --- LOOP02.PID.OR
INPUT P - Input P (Process) ----- LOOP02.AIN2.O1
INPUT S - Input S (Setpoint) ---- LOOP02.SETPT.O1
INPUT V - Input V (Valve) ------ LOOP02.A/M.O1
LOOP # - Loop # ----- 02

AOUT2 - Analog Output 2 Function Block
RG PTR - Range Pointer ---------- LOOP02.PID.OR
INPUT S - Input S ---------- LOOP02.A/M.O1

5.8 FCO121 - CASCADE CONTROL

Factory Configured Option FCO121 provides two loops configured for Cascade control. The block diagram of the configuration of the two loops is shown below along with the *changes* made to the default parameter values of the configured blocks. The process range of the Primary loop can be changed in Analog Input 1 and the range of the Secondary loop in Analog Input 2. Also, the output range of the primary PID controller must be changed to match any new range in the secondary loop. If the loop tag 'PRIM' or 'SEC' is changed, all configured references will automatically be changed to the new tag.

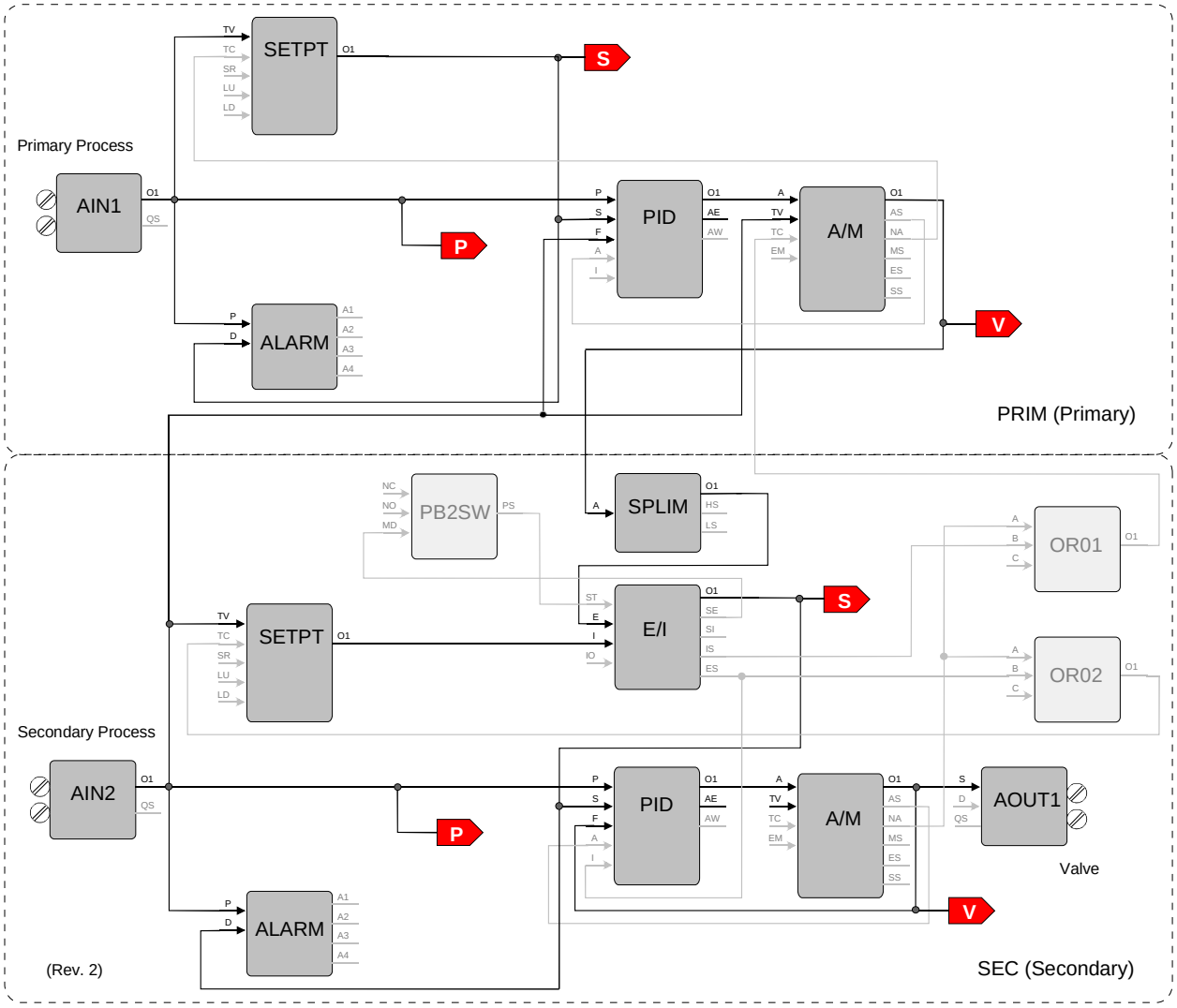

Primary Loop

SETPT - Setpoint Function Block
RG PTR - Range Pointer --------- PRIM.AIN1.OR
INPUT TV - Input TV ---------- PRIM.AIN1.O1
INPUT TC - Input TC ---------- PRIM.A/M.NA
ESN - Exec. Seq. No.---------- 5

ALARM - Alarm Function Block
RG PTR - Range Pointer -------- PRIM.AIN1.OR
INPUT P - Input P ---------- PRIM.AIN1.O1
INPUT D - Input D ---------- PRIM.SETPT.O1
ESN - Exec. Seq. No. ---------- 10

Primary Loop (cont)

PID - PID Controller Function Block
RG PTR - Range Pointer -------- PRIM.AIN1.OR
INPUT P - Input P ---------- PRIM.AIN1.O1
INPUT S - Input S ---------- PRIM.SETPT.O1
INPUT F - Input F ---------- SEC.AIN2.O1
INPUT A - Input A ---------- PRIM.A/M.AS
ESN - Exec. Seq. No.---------- 15

A/M - Auto/Manual Function Block
RG PTR - Range Pointer -------- PRIM.PID.OR
INPUT A - Input A ---------- PRIM.PID.O1
INPUT TV - Input TV ---------- SEC.AIN2.O1
INPUT TC - Input TC ---------- SEC.OR01.O1
ESN - Exec. Seq. No. ---------- 20

ODC - Operator Display for Controllers
P RG PTR - P Range Pointer ----- PRIM.AIN1.OR
V RG PTR - V Range Pointer ---- PRIM.PID.OR
INPUT P - Input P (Process) ----- PRIM.AIN1.O1
INPUT S - Input S (Setpoint) ---- PRIM.SETPT.O1
INPUT V - Input V (Valve) ------ PRIM.A/M.O1
LOOP # - Loop # ----- 01

Secondary Loop

SETPT - Setpoint Function Block
RG PTR - Range Pointer ------- SEC.AIN2.OR
INPUT TV - Input TV ---------- SEC.AIN2.O1
INPUT TC - Input TC ---------- SEC.OR02.O1
ESN - Exec. Seq. No.---------- 5

ALARM - Alarm Function Block
RG PTR - Range Pointer ------ SEC.AIN2.OR
INPUT P - Input P ---------- SEC.AIN2.O1
INPUT D - Input D ---------- SEC.E/I.O1
ESN - Exec. Seq. No. --------- 10

PB2SW - PB2 Switch Function Block
INPUT MD - Input MD ------- SEC.E/I.SE
ESN - Exec. Seq. No. --------- 15

SPLIM - Setpoint Limit Function Block
RG PTR - Range Pointer ----- SEC.AIN2.OR
INPUT A - Input A ---------- PRIM.A/M.O1
ESN - Exec. Seq. No. --------- 20

E/I - Ext/Int Transfer Switch Function Block
INPUT ST - Input ST --------- SEC.PB2SW.PS
INPUT E - Input E ---------- SEC.SPLIM.O1
INPUT I - Input I ---------- SEC.SETPT.O1
ESN - Exec. Seq. No. --------- 25

PID - PID Controller Function Block
RG PTR - Range Pointer -------- SEC.AIN2.OR
INPUT P - Input P ---------- SEC.AIN2.O1
INPUT S - Input S ---------- SEC.E/I.O1
INPUT F - Input F ---------- SEC.A/M.O1
INPUT A - Input A ---------- SEC.A/M.AS
INPUT I - Input I ---------- SEC.E/I.ES
ESN - Exec. Seq. No.---------- 30

A/M - Auto/Manual Function Block
RG PTR - Range Pointer ---------- SEC.PID.OR
INPUT A - Input A ---------- SEC.PID.O1
ESN - Exec. Seq. No. ---------- 35

OR01 - OR Function Block
INPUT A - Input A ---------- SEC.A/M.NA
INPUT B - Input B ---------- SEC.E/I.IS
ESN - Exec. Seq. No. ---------- 40
-
OR02 - OR Function Block
INPUT A - Input A ---------- SEC.A/M.NA
INPUT B - Input B ---------- SEC.E/I.ES
ESN - Exec. Seq. No. ---------- 45

AOUT1 - Analog Output 1 Function Block
RG PTR - Range Pointer ---------- SEC.PID.OR
INPUT S - Input S ---------- SEC.A/M.O1

ODC - Operator Display for Controllers
P RG PTR - P Range Pointer ---- SEC.AIN2.OR
V RG PTR - V Range Pointer --- SEC.PID.OR
INPUT P - Input P (Process) ----- SEC.AIN2.O1
INPUT S - Input S (Setpoint) ---- SEC.E/I.O1
INPUT V - Input V (Valve) ------ SEC.A/M.O1
LOOP # - Loop # ----- 02

5.9 FCO122 - CASCADE CONTROL W/ OPERATOR SETPOINT LIMITS

Factory Configured Option FCO122 provides two loops configured for Cascade control. The block diagram of the configuration of the two loops is shown below along with the *changes* made to the default parameter values of the configured blocks. The process range of the Primary loop can be changed in Analog Input 1 and the range of the Secondary loop in Analog Input 2. Also, the output range of the primary PID controller must be changed to match any new range in the secondary loop. If the loop tag 'PRIM' or 'SEC' is changed, all configured references will automatically be changed to the new tag.

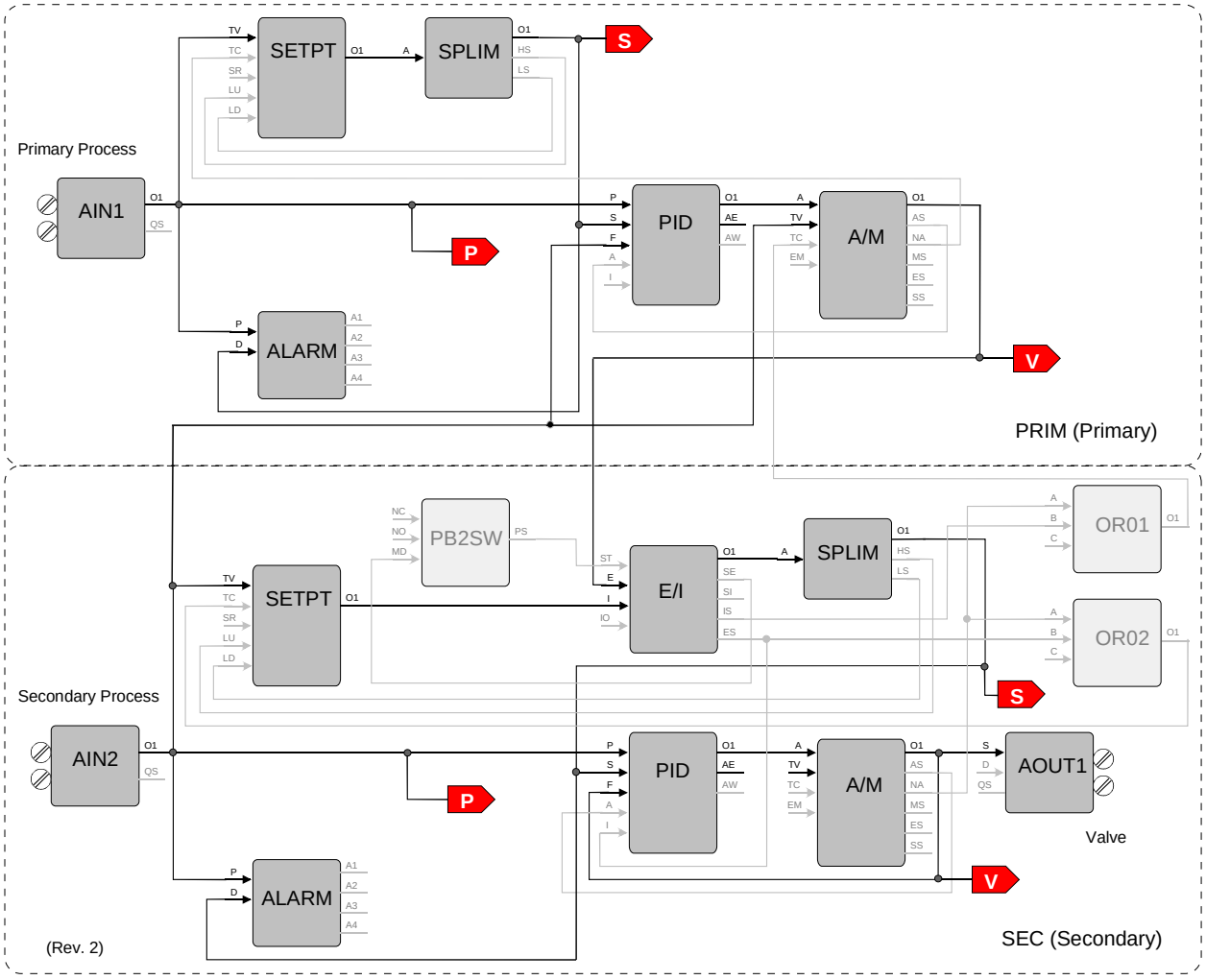

Primary Loop

SETPT - Setpoint Function Block
RG PTR - Range Pointer -------- PRIM.AIN1.OR
INPUT TV - Input TV ---------- PRIM.AIN1.O1
INPUT TC - Input TC ---------- PRIM.A/M.NA
INPUT LU - Input LU ---------- PRIM.SPLIM.HS
INPUT LD - Input LD ---------- PRIM.SPLIM.LS
ESN - Exec. Seq. No.---------- 5

SPLIM- Setpoint Limit Function Block
RG PTR - Range Pointer -------- PRIM.AIN1.OR
INPUT A - Input A ---------- PRIM.SETPT.O1
ESN - Exec. Seq. No.---------- 10

Primary Loop (cont)

ALARM - Alarm Function Block
RG PTR - Range Pointer -------- PRIM.AIN1.OR
INPUT P - Input P ---------- PRIM.AIN1.O1
INPUT D - Input D ---------- PRIM.SPLIM.O1
ESN - Exec. Seq. No. ---------- 20

PID - PID Controller Function Block
RG PTR - Range Pointer -------- PRIM.AIN1.OR
INPUT P - Input P ---------- PRIM.AIN1.O1
INPUT S - Input S ---------- PRIM.SPLIM.O1
INPUT F - Input F ---------- SEC.AIN02.O1
INPUT A - Input A ---------- PRIM.A/M.AS
ESN - Exec. Seq. No.---------- 30

A/M - Auto/Manual Function Block
RG PTR - Range Pointer -------- PRIM.PID.OR
INPUT A - Input A ---------- PRIM.PID.O1
INPUT TV - Input TV ---------- SEC.AIN2.O1
INPUT TC - Input TC ---------- SEC.OR01.O1
ESN - Exec. Seq. No. ---------- 60

ODC - Operator Display for Controllers
P RG PTR - P Range Pointer ------ PRIM.AIN1.OR
V RG PTR - V Range Pointer ----- PRIM.PID.OR
INPUT P - Input P (Process) ------ PRIM.AIN1.O1
INPUT S - Input S (Setpoint) ----- PRIM.SPLIM.O1
INPUT V - Input V (Valve) ------- PRIM.A/M.O1
LOOP # - Loop # ------ 01

Secondary Loop

SETPT - Setpoint Function Block
RG PTR - Range Pointer ----- SEC.AIN2.OR
INPUT TV - Input TV --------- SEC.AIN2.O1
INPUT TC - Input TC --------- SEC.OR02.O1
INPUT LU - Input LU --------- SEC.SPLIM.HS
INPUT LD - Input LD --------- SEC.SPLIM.LS
ESN - Exec. Seq. No.---------- 5

ALARM - Alarm Function Block
RG PTR - Range Pointer ----- SEC.AIN2.OR
INPUT P - Input P ---------- SEC.AIN2.O1
INPUT D - Input D ---------- SEC.SPLIM.O1
ESN - Exec. Seq. No. --------- 10

PB2SW - PB2 Switch Function Block
INPUT MD - Input MD ------- SEC.E/I.SE
ESN - Exec. Seq. No. --------- 15

E/I - Ext/Int Transfer Switch Function Block
INPUT ST - Input ST --------- SEC.PB2SW.PS
INPUT E - Input E ---------- PRIM.A/M.O1
INPUT I - Input I ---------- SEC.SETPT.O1
ESN - Exec. Seq. No. --------- 20

SPLIM - Setpoint Limit Function Block
RG PTR - Range Pointer ------ SEC.AIN2.OR
INPUT A - Input A ---------- SEC.E/I.O1
ESN - Exec. Seq. No. --------- 25

PID - PID Controller Function Block
RG PTR - Range Pointer -------- SEC.AIN2.OR
INPUT P - Input P ---------- SEC.AIN2.O1
INPUT S - Input S ---------- SEC.SPLIM.O1
INPUT F - Input F ---------- SEC.A/M.O1
INPUT A - Input A ---------- SEC.A/M.AS
INPUT I - Input I ---------- SEC.E/I.ES
ESN - Exec. Seq. No.---------- 30

A/M - Auto/Manual Function Block
RG PTR - Range Pointer ---------- SEC.PID
INPUT A - Input A ---------- SEC.PID.O1
ESN - Exec. Seq. No. ---------- 35

OR01 - OR Function Block
INPUT A - Input A ---------- SEC.A/M.NA
INPUT B - Input B ---------- SEC.E/I.IS
ESN - Exec. Seq. No. ---------- 40

OR02 - OR Function Block
INPUT A - Input A ---------- SEC.A/M.NA
INPUT B - Input B ---------- SEC.E/I.ES
ESN - Exec. Seq. No. ---------- 45

AOUT1 - Analog Output 1 Function Block
RG PTR - Range Pointer ---------- SEC.PID.OR
INPUT S - Input S ---------- SEC.A/M.O1

ODC - Operator Display for Controllers
P RG PTR - P Range Pointer ----- SEC.AIN2.OR
V RG PTR - V Range Pointer ---- SEC.PID.OR
INPUT P - Input P (Process) ----- SEC.AIN2.O1
INPUT S - Input S (Setpoint) ---- SEC.SPLIM.O1
INPUT V - Input V (Valve) ------ SEC.A/M.O1
LOOP # - Loop# ----- 02

■

6.0 NETWORK COMMUNICATIONS

This Configuration Guide provides an overview of the data that can be obtained from the station using either the Modbus network communications, the optional LIL network communications, or the optional Ethernet board that provides Modbus over Ethernet protocol. In the Modbus over Ethernet protocol, all listed Modbus items are available but are embedded in the Modbus/Ethernet protocol frame. Refer to Section 7 Data Mapping for detailed lists of the actual data.

6.1 MODBUS DATA MAPPING

Modbus is a master/slave protocol where a master device (e.g. i|station™, PC-based operator workstation) sends commands to one slave (e.g. Model 353R, Model 353) and waits for a response. Each station has a unique network address (1-32), configured as part of the station parameters, that identifies that controller.

Data is assigned to either a register (16-bit word) or a coil (1-bit). An IEEE floating point number (Real) is assigned to 2 consecutive registers with the first containing the most significant and the second the least significant portion of the floating point number. The 353R and 353 use an IEEE reverse format where the most significant word is first and the least significant word is second. See Table 4-4 in Section 4.2.7 AIE_ - Analog Input – Ethernet for more information on floating point formats.

The station supports Modbus function codes 01, 02, 03, 04, 05, 06, 08, and 16. Data Mapping has a list of available data and specific locations within the Modbus map. The following is the overview for the Modbus data mapping.

Station Coils	x0001 - x0071
Loop Coils	x0296 - x1495
Extended Loop Coils (ODD Pushbuttons) V2.2	x8701 - x9100
Sequencer Loop I/O Coils (ref. MSLCP pointer)	x1496 - x2263
LonWorks Remote I/O Coils (Model 353R, 353*, etc.)	x2401 - x3976
Ubus Discrete I/O States & Forcing V2.0 (353R)	x4001 - x5500
(spares)	x5501 - x9100
Loop PCOM Block Coils	x9101 - x9999
Station Data (16-bit integer)	x0001 - x0100
Station String Data (ASCII)	x0101 - x0200
Loop Dynamic Data (16-bit integer)	x0201 - x0450
Loop Variable Data (16-bit integer)	x0451 - x1200
Loop Static Data (16-bit integer)	x1201 - x1950
Loop Dynamic Data (32-bit floating point)	x1951 - x2450
Loop Variable Data (32-bit floating point)	x2451 - x3950
Loop Static Data (32-bit floating point)	x3951 - x5450
Loop String Data (ASCII)	x5451 - x7950
Ubus Module Types (353R)	x7951 - x8000
Loop Trend Data (ref. MLTP pointer)	x8001 - x9000
(spares)	x9001 - x9999

* Design Level “A”

EXTENDED MODBUS REGISTERS: The traditional addressing of Modbus Holding Registers has been limited to 9999. However, since the actual address is contained in a 16-bit word, addresses above 9999 are available. Many Modbus Masters support this extended addressing. Configuration data for a Sequencer & Timers contained in a single sequencer loop can be accessed in this space. The actual loop that can be accessed is contained in the Modbus parameter MSLCP Modbus Sequencer & Timers Configuration Pointer located in register 40041. This register contains the Modbus Index for the loop that can be configured with these extended parameters. A small number of these parameters have also been mapped in the areas listed within the actual loop area for those Masters that cannot access the extended area.

In addition, there are registers reserved for the mapping of Modbus registers used in the peer-to-peer functionality of the Ethernet function blocks.

Sequencer Mask Configurations..... x10001 - x18000
Real Time Trip Block Configurations..... x19001 - x19021
Sequencer Time & Analog Configurations ..... x20001 - x20999
Timer Function Block Configurations..... x21001 - x21009
Reserved -- Modbus Ethernet Block Register ..... x29001 - x29019
Reserved -- Modbus Ethernet Analog Inputs Static Data..... x30001 - x30352
Reserved -- Modbus Ethernet Analog Outputs Static Data ..... x30353 - x30608
Reserved -- Modbus Ethernet Digital Inputs Static Data ..... x30609 - x30704
Reserved -- Modbus Ethernet Coil Inputs Static Data..... x30705 - x30832
Reserved -- Modbus Ethernet Analog Inputs Dynamic Data x30833- x30896
Reserved -- Modbus Ethernet Digital Inputs Dynamic Data..... x30897 - x30928
Reserved -- Modbus Ethernet Coil Inputs Dynamic Data ..... x30929 - x30960
Reserved -- Modbus Ethernet Analog Outputs Dynamic Data.. x30961 - x31024*

* Refer to the AIE function block in Section 4 Function Blocks for details.

6.2 LIL DATA MAPPING

LIL data is assigned to one of two data types. The first is global data that occupies parameter 1 of each channel and is transmitted by the LIL interface every 0.5 seconds. The remaining data is non-global which occupies parameters 2 through 256 and is transmitted in response to a LIL READ command or can be changed by a LIL WRITE command.

Each parameter is a 16-bit word. An IEEE floating point number (Real) is assigned to 2 consecutive parameters with the first containing the most significant and the second the least significant portion of the floating point number. String data can occupy one or more consecutive parameters. The following tables provide an overview listing of available data with descriptions located in the Data Mapping portion of this section. The acronym in the table identifies the data in Section 7 Data Mapping. Data can be accessed using the Model 320 Independent Computer Interface. Refer to AD320-10 Model 320 ICI User Manual and AD320-20 Guidelines for Writing Application Software Using the Model 320 ICI.

Guidelines:
All individual parameters (words) can be read using the random parameter data request (CMD 7). Parameters that span multiple words, such as floating point, ASCII tags, etc., can also be read using the multiple-byte parameter data request (CMD 23) but only one variable can be requested at a time. Writes are made using the parameter data sent (CMD 9). In some cases, such as loop and alarm status words, the MASK ON/OFF type codes are used to identify individual bits. Not all bit mapped words support this option. See Section 7 Data Mapping for details.

6.2.1 Station Data

Station data are fixed and they occupy the first seven channels.

C\P	1	2	3	4	5	6	7	8	9	10`	11	12
1	GDS	RAM	CBT	CBSR	EBT	EBSR	RBT	RBSR	NBT	NBSR	OAT	OASR
2	ST	STAG						DRN	CFNR			
3	SSW	CWT	SA	CT	RTS	STY	STM	STD	STH	STMN	STSC	
4	SE	SN				AASEL						
5	NCL	C1S	C2S	C3S	C4S	C5S	C6S	C7S	C8S	C9S	C10S	C11S
6	NSL	S1S	S2S	S3S	S4S	S5S	S6S	S7S	S8S	S9S	S10S	S11S
7	LSLCP	CFN										

C\P	13	14	15	16	17	18	19	20	21	22	23	24
1	OBT	OBSR	OFT	KSR								
2	SCR	NCR										
3												
4												
5	C12S	C13S	C14S	C15S	C16S	C17S	C18S	C19S	C20S	C21S	C22S	C23S
6	S12S	S13S	S14S	S15S	S16S	S17S	S18S	S19S	S20S	S21S	S22S	S23S
7	L1Z	L2Z	L3Z	L4Z	L5Z	L6Z	L7Z	L8Z	L9Z	L10Z	L11Z	L12Z

Ubus Address xx - Discrete I/O States & Forcing N=Normal, M=Mode, F=Forced (see Section 7 Data Mapping for details)

C\P	25	26	27	28	29	30	31	32	33	34	35	36
1							UA01N	UA02N	UA03N	UA04N	UA05N	UA06N
2							UA01M	UA02M	UA03M	UA04M	UA05M	UA06M
3							UA01F	UA02F	UA03F	UA04F	UA05F	UA06F
4							UA01MT	UA02MT	UA03MT	UA04MT	UA05MT	UA06MT
5	C24S	C25S										
6	S24S	S25S										L25Z
7	L13Z	L14Z	L15Z	L16Z	L17Z	L18Z	L19Z	L20Z	L21Z	L22Z	L23Z	L24Z

C\P	37	38	39	40	41	42	43	44	45	46	47	48
1	UA07N	UA08N	UA09N	UA10N	UA11N	UA12N	UA13N	UA14N	UA15N	UA16N	UA17N	UA18N
2	UA07M	UA08M	UA09M	UA10M	UA11M	UA12M	UA13M	UA14M	UA15M	UA16M	UA17M	UA18M
3	UA07F	UA08F	UA09F	UA10F	UA11F	UA12F	UA13F	UA14F	UA15F	UA16F	UA17F	UA18F
4	UA07MT	UA08MT	UA09MT	UA10MT	UA11MT	UA12MT	UA13MT	UA14MT	UA15MT	UA16MT	UA17MT	UA18MT
5	NAL	A1S	A2S	A3S	A4S	A5S	A6S	A7S	A8S	A9S	A10S	A11S
6	NDL	D1S	D2S	D3S	D4S	D5S	D6S	D7S	D8S	D9S	D10S	D11S
7	NPL	P1S	P2S	P3S	P4S	P5S	P6S	P7S	P8S	P9S	P10S	P11S

C\P	49	50	51	52	53	54	55	56	57	58	59	60
1	UA19N	UA20N	UA21N	UA22N	UA23N	UA24N	UA25N	UA26N	UA27N	UA28N	UA29N	UA30N
2	UA19M	UA20M	UA21M	UA22M	UA23M	UA24M	UA25M	UA26M	UA27M	UA28M	UA29M	UA30M
3	UA19F	UA20F	UA21F	UA22F	UA23F	UA24F	UA25F	UA26F	UA27F	UA28F	UA29F	UA30F
4	UA19MT	UA20MT	UA21MT	UA22MT	UA23MT	UA24MT	UA25MT	UA26MT	UA27MT	UA28MT	UA29MT	UA30MT
5	A12S	A13S	A14S	A15S	A16S	A17S	A18S	A19S	A20S	A21S	A22S	A23S
6	D12S	D13S	D14S	D15S	D16S	D17S	D18S	D19S	D20S	D21S	D22S	D23S
7	P12S	P13S	P14S	P15S	P16S	P17S	P18S	P19S	P20S	P21S	P22S	P23S

C\P	61	62	63	64	65	66	67	68	69	70	71	72
1	UA31N											
2	UA31M											
3	UA31F											
4	UA31MT											
5	A24S	A25S										
6	D24S	D25S										
7	P24S	P25S								....	....	....

6.2.2 Control Loop Data

Control loop data occupies five LIL channels. The starting channel is entered during configuration of the ODC operator display function block for each loop, as LIL CHAN (n). The first channel for each loop can be viewed in station data starting at channel 5/parameter 2 for control loops and channel 6/parameter 2 for a sequencer loops. The station configuration entry (both local and graphical PC-based) will indicate the next available open space of five contiguous channels. Another starting channel can be entered but it is important to utilize the lowest total number of channels.

Channel locations n through n+4, in the table below, identify variables that will be available on the LIL for each control loop. All parameter 1 data (e.g. P-process) is global and is transmitted every 0.5 second. All other data is sent out on command.

C\P	1	2	3	4	5	6	7	8	9	10`	11	12
n	PI	PGI	TII	TDI	DGI	MRI	RI	BI	PF		HDF	
n+1	SI	TSPI	RTI	HLI	LLI	RRI	CAI		SF		LDF	
n+2	VI	TLmI	TLlI	T1mI	T1lI	T2mI	T2lI		VF		DBF	
n+3	CLS	TAG						PUR		RHI	RLI	DPPI
n+4	ASW	A1LI	A2LI	A3LI	A4LI	A1TW	A2TW	A3TW	A4TW	ECLS		

C\P	13	14	15	16	17	18	19	20	21	22	23	24
n	PGF		TIF		TDF		DGF		MRF		RF	
n+1	TSPF		RTF		HLF		LLF		RRF			
n+2	LHM			RHM								
n+3	TLF		T1F		T2F		TLU					XI
n+4	A1LF		A2LF		A3LF		A4LF					YI

C\P	25	26	27	28	29	30	31	32	33	34	35	36
n	BF		PMNF		PMXF		PU			PDPPI		
n+1											BHLF	
n+2			VMNF		VMXF		VU			VDPPI	BLLF	
n+3	XF		XMNF		XMXF		XU			XDPPI	BPLF	
n+4	YF		YMNF		YMXF		YU			YDPPI	BGF	

C\P	37	38	39	40	41	42	43	44	45	46	47	48
n	ADF		AHF		ASF		APGF		ATIF		ATDF	
n+1	Q1N				Q1F		Q1MNF		Q1MXF			
n+2	Q2N				Q2F		Q2MNF		Q2MXF			
n+3	Q1U			Q2U								
n+4	A1TI	A2TI	A3TI	A4TI	A1PI	A2PI	A3PI	A4PI				

C\P												256
n												102
n+1												103
n+2												104
n+3												5
n+4												7

6.2.3 Sequence Loop Data

Sequence Loop data occupies six LIL channels. The starting channel is entered during configuration of the ODS operator display function block for each loop, as LIL CHAN (n). The configuration entry (both local and graphical PC-based) will indicate the next available open space of six contiguous channels. Another starting channel can be entered but it is important to utilize the lowest total number of channels.

In the table below, channel locations n through n+5 identify variables that will be available on the LIL for each sequencer loop. All parameter 1 data (e.g. SSN Program Sequencer Step No.) is global and is transmitted every 0.5 seconds. All other data is sent out on command.

C\P	1	2	3	4	5	6	7	8	9	10`	11	12
n	SSNI	SSNF		SNSI	SNGI	SNSF		SNGF			SNRI	
n+1	SAOmF	SAOF		SAEPF			SNRF		CRNF			
n+2	SAOlF											
n+3	CRNI	SRTF		SSTF		TACM						
n+4	SLS											
n+5	ASW											

Sequencer & Remote I/O State, Mode & Forcing

C\P	13	14	15	16	17	18	19	20	21	22	23	24
n	SG0KI	SG0SI	SG0SO	SG4KI	SG4SI	SG4SO	SG8KI	SG8SI	SG8SO	SGCKI	SGCSI	SGCSO
n+1	SG1KI	SG1SI	SG1SO	SG5KI	SG5SI	SG5SO	SG9KI	SG9SI	SG9SO	SGDKI	SGDSI	SGDSO
n+2	SG2KI	SG2SI	SG2SO	SG6KI	SG6SI	SG6SO	SGAKI	SGASI	SGASO	SGEKI	SGESI	SGESO
n+3	SG3KI	SG3SI	SG3SO	SG7KI	SG7SI	SG7SO	SGBKI	SGBSI	SGBSO	SGFKI	SGFSI	SGFSO
n+4												
n+5												

C\P	25	26	27	28	29	30	31	32	33	34	35	36
n												
n+1												
n+2												
n+3												
n+4												
n+5												

C\P	37	38	39	40	41	42	43	44	45	46	47	48
n	L#RMSG						TACM					
n+1	L#PMSG											
n+2	L#SMSG											
n+3	L#CMSGa											
n+4	L#CMSGb											
n+5	L#CMSGc											

C\P	49	50	51	52	53	54	55	56	57	58	59	60
n	L#CMSGd											
n+1	L#CMSGe											
n+2	L#CMSGf											
n+3	L#CMSGg											
n+4	L#CMSGh											
n+5	L#CMSGi											

Timers - Elapsed & Remaining Times

C\P	61	62	63	64	65	66	67	68	69	70	71	72
n	DYT01ET		DYT01RT		DYT02ET		DYT02RT		DYT03ET		DYT03RT	
n+1	OST01ET		OST01RT		OST02ET		OST02RT		OST03ET		OST03RT	
n+2	RCT01ET		RCT01RT		RCT02ET		RCTO2RT		RCT03ET		RCTO3RT	
n+3	ROT01ET		ROT01RT		ROT02ET		ROTO2RT		ROT03ET		ROTO3RT	
n+4												
n+5												

C\P	73	74	75	76	77	78	79	80	81	82	83	84
n	DYT04ET		DYT04RT		DYT05ET		DYT05RT		DYT06ET		DYT06RT	
n+1	OST04ET		OST04RT		OST05ET		OST05RT		OST06ET		OST06RT	
n+2	RCT04ET		RCT04RT		RCT05ET		RCT05RT		RCT06ET		RCTO6RT	
n+3	ROT04ET		ROT04RT		ROT05ET		ROT05RT		ROT06ET		ROTO6RT	
n+4												
n+5												

C\P	85	86	87	88	89	90	91	92	92	94	95	96
n	DYT07ET		DYT07RT		DYT08ET		DYT08RT		DYT09ET		DYT09RT	
n+1	OST07ET		OST07RT		OST08ET		OST08RT		OST09ET		OST06RT	
n+2	RCT07ET		RCT07RT		RCT08ET		RCT08RT		RCT09ET		RCT09RT	
n+3	ROT07ET		ROT07RT		ROT08ET		ROT08RT		ROT09ET		ROT09RT	
n+4												
n+5												

C\P	97	98	99	100	101	102	103	104	104	106	107	108
n	DYT10ET		DYT10RT		DYT11ET		DYT11RT		DYT12ET		DYT12RT	
n+1	OST10ET		OST10RT		OST11ET		OST11RT		OST12ET		OST12RT	
n+2	RCT10ET		RCT10RT		RCT11ET		RCT11RT		RCT12ET		RCT12RT	
n+3	ROT10ET		ROT10RT		ROT11ET		ROT11RT		ROT12ET		ROT12RT	
n+4												
n+5												

C\P	109	110	111	112	113	114	115	116	117	118	119	120
n	DYT13ET		DYT13RT		DYT14ET		DYT14RT		DYT15ET		DYT15RT	
n+1	OST13ET		OST13RT		OST14ET		OST14RT		OST15ET		OST15RT	
n+2	RCT13ET		RCT13RT		RCT14ET		RCT14RT		RCT15ET		RCT15RT	
n+3	ROT13ET		ROT13RT		ROT14ET		ROT14RT		ROT15ET		ROT15RT	
n+4												
n+5												

C\P	121	122	123	124	125	126	127	128	129	130	131	132
n	DYT16ET		DYT16RT		DYT17ET		DYT17RT		DYT18ET		DYT18RT	
n+1	OST16ET		OST16RT		OST17ET		OST17RT		OST18ET		OST18RT	
n+2	RCT16ET		RCT16RT		RCT17ET		RCT17RT		RCT18ET		RCT18RT	
n+3	ROT16ET		ROT16RT		ROT17ET		ROT17RT		ROT18ET		ROT18RT	
n+4												
n+5												

C\P	133	134	135	136	137	138	139	140	141	142	143	144
n	DYT19ET		DYT19RT		DYT20ET		DYT20RT		DYT21ET		DYT21RT	
n+1	OST19ET		OST19RT		OST20ET		OST20RT		OST21ET		OST21RT	
n+2	RCT19ET		RCT19RT		RCT20ET		RCT20RT		RCT21ET		RCT21RT	
n+3	ROT19ET		ROT19RT		ROT20ET		ROT20RT		ROT21ET		ROT21RT	
n+4												
n+5												

C\P	150	151	152	153	154	155	156	157	158	159	160	161
n												
n+1												
n+2												
n+3												
n+4												
n+5												

Sequencer and Timer Configuration Parameters:

SxxxTIM - Step x Time Period - Real
SxxxAEP - Step x Analog End Point - Real
SxxxGnIM - Step x Group n Input Mask - 16 bit mask word
SxxxGnOM - Step x Group n Output Mask - 16 bit mask word
DYTxxT - Delay Timer x Time - Real
OSTxxT - One Shot Timer x Time - Real
RCTxxNT - Repeat Cycle Timer x-ON Time - Real
RCTxxFT - Repeat Cycle Timer x-OFF Time - Real
ROTxxT - Retentive On Timer Time - Real

C\P	150	151	152	153	154	.....	169	170	.....	185	186	187
1	S001TIM		S001AEP		S001G0IM	.....	S001GFIM	S001G0OM	.....	S001GFOM		
2	S002TIM		S002AEP		S002G0IM	.....	S002GFIM	S002G0OM	.....	S002GFOM		
3	S003TIM		S003AEP		S003G0IM	.....	S003GFIM	S003G0OM	.....	S003GFOM		
4	S004TIM		S004AEP		S004G0IM	.....	S004GFIM	S004G0OM	.....	S004GFOM		
5	S005TIM		S005AEP		S005G0IM	.....	S005GFIM	S005G0OM	.....	S005GFOM		
6	S005TIM		S006AEP		S006G0IM	.....	S006GFIM	S006G0OM	.....	S006GFOM		
7	S007TIM		S007AEP		S007G0IM	.....	S007GFIM	S007G0OM	.....	S007GFOM		

.....

C\P	150	151	152	153	154	.....	169	170	.....	185	186	187
244	S244TIM		S244AEP		S244G0IM	.....	S244GFIM	S244G0OM	.....	S244GFOM		
245	S245TIM		S245AEP		S245G0IM	.....	S244GFIM	S245G0OM	.....	S244GFOM		
246	S246TIM		S246AEP		S246G0IM	.....	S244GFIM	S246G0OM	.....	S244GFOM		
247	S247TIM		S247AEP		S247G0IM	.....	S244GFIM	S247G0OM	.....	S244GFOM		
248	S248TIM		S248AEP		S248G0IM	.....	S244GFIM	S248G0OM	.....	S244GFOM		
249	S249TIM		S249AEP		S249G0IM	.....	S244GFIM	S249G0OM	.....	S244GFOM		
250	S250TIM		S250AEP		S250G0IM	.....	S244GFIM	S250G0OM	.....	S244GFOM		

C\P	190	191	192	193	194	195	196	197	198	199	200	201
1	DYT01T		OST01T		RCT01NT		RCT01FT		ROT01T			
2	DYT02T		OST02T		RCT02NT		RCT02FT		ROT02T			
3	DYT03T		OST03T		RCT03NT		RCT03FT		ROT03T			
4	DYT04T		OST04T		RCT04NT		RCT04FT		ROT04T			
5	DYT05T		OST05T		RCT05NT		RCT05FT		ROT05T			
6	DYT06T		OST06T		RCT06NT		RCT06FT		ROT06T			
7	DYT07T		OST07T		RCT07NT		RCT07FT		ROT07T			
8	DYT08T		OST08T		RCT08NT		RCT08FT		ROT08T			
9	DYT09T		OST09T		RCT09NT		RCT09FT		ROT09T			
10	DYT10T		OST10T		RCT10NT		RCT10FT		ROT10T			
11	DYT11T		OST11T		RCT11NT		RCT11FT		ROT11T			
12	DYT12T		OST12T		RCT12NT		RCT12FT		ROT12T			
...												

6.2.4 Analog Indicator Loop Data

Analog Indicator loop data occupies six LIL channels. The starting channel is entered during configuration of the ODA operator display function block for each loop, as LIL CHAN (n). The first channel for each loop can be viewed in station data starting at channel 5/parameter 38. The station configuration entry (both local and graphical PC-based) will indicate the next available open space of six contiguous channels. Another starting channel can be entered but it is important to utilize the lowest total number of channels.

Channel locations n through n+5, in the table below, identify variables that will be available on the LIL for each analog indicator loop. All parameter 1 data (e.g. P-process) is global and is transmitted every 0.5 second. All other data is sent out on command.

C\P	1	2	3	4	5	6	7	8	9	10`	11	12
n	L#P1I	L#P1F		L#PIT			L#P1U					
n+1	L#P2I	L#P2F		L#P2T			L#P2U					
n+2	L#P3I	L#P3F		L#P3T			L#P3U					
n+3	L#P4I	L#P4F		L#P4T			L#P4U					
n+4	L#SW 1	L#TAG										
n+5	L#SW 2											

C\P	13	14	15	16	17	18	19	20	21	22	23	24
n	L#P1ALF		L#P1BLF		L#P2ALF		L#P2BLF		L#P3ALF		L#P3BLF	
n+1	L#P1ALI	L#P1BLI	L#P2ALI	L#P2BLI	L#P3ALI	L#P3BLI	L#P4ALI	L#P4BLI		L#Q1U		
n+2	L#P1ATI	L#P1BTI	L#P2ATI	L#2BTI	L#PATI	L#P3BT	L#P4ATI	L#P4BTI		L#Q2U		
n+3	L#P1API	L#P1BPI	L#P2API	L#P2BPI	L#P3API	L#P3BPI	L#P4API	L#P4BPI		L#Q3U		
n+4										L#Q4U		
n+5												

C\P	25	26	27	28	29	30	31	32	33	34	35	36
n	L#P4ALF		L#P4BLF									
n+1	L#Q1N				L#Q1F		L#Q1MNF		L#Q1MXF			
n+2	L#Q2N				L#Q2F		L#Q2MNF		L#Q2MXF			
n+3	L#Q3N				L#Q3F		L#Q3MNF		L#Q3MXF			
n+4	L#Q4N				L#Q4F		L#Q4MNF		L#Q4MXF			
n+5												

6.2.5 Discrete Indicator Loop Data

Discrete Indicator loop data occupies four LIL channels. The starting channel is entered during configuration of the ODD operator display function block for each loop, as LIL CHAN (n). The first channel for each loop can be viewed in station data starting at channel 6/parameter 38. The station configuration entry (both local and graphical PC-based) will indicate the next available open space of six contiguous channels. Another starting channel can be entered but it is important to utilize the lowest total number of channels.

Channel locations n through n+3, in the table below, identify variables that will be available on the LIL for each analog indicator loop. All parameter 1 data (e.g. discrete input states) is global and is transmitted every 0.5 second. All other data is sent out on command.

C\P	1	2	3	4	5	6	7	8	9	10	11	12
n	L#DISW	L#I0TAG			L#I3TAG			L#I6TAG			L#I9TAG	
n+1	L#DSSW	L#I1TAG			L#I4TAG			L#I7TAG			L#IATAG	
n+2	L#DOSW	L#I2TAG			L#I5TAG			L#I8TAG			L#IBTAG	
n+3	L#SW	L#TAG										

C\P	13	14	15	16	17	18	19	20	21	22	23	24
n		L#ICTAG										
n+1		L#IDTAG										
n+2		L#IETAG										
n+3		L#IFTAG										

6.2.6 Pushbutton Loop Data

Pushbutton loop data occupies two LIL channels. The starting channel is entered during configuration of the ODP operator display function block for each loop, as LIL CHAN (n). The first channel for each loop can be viewed in station data starting at channel 7/parameter 38. The station configuration entry (both local and graphical PC-based) will indicate the next available open space of six contiguous channels. Another starting channel can be entered but it is important to utilize the lowest total number of channels.

Channel locations n through n+1, in the table below, identify variables that will be available on the LIL for each analog indicator loop. All parameter 1 data (e.g. discrete input states) is global and is transmitted every 0.5 second. All other data is sent out on command.

C\P	1	2	3	4	5	6	7	8	9	10	11	12
n	L#SW1	L#TAG										
n+1	L#SW2											

C\P	13	14	15	16	17	18	19	20	21	22	23	24
n	L#G1TAG			L#G1P1T			L#G1P2T			L#G1SAT		
n+1	L#G1F1T			L#G1FOT						L#G1SMT		

C\P	25	26	27	28	29	30	31	32	33	34	35	36
n	L#G2TAG			L#G2P1T			L#G2P2T			L#G2SAT		
n+1	L#G2F1T			L#G2FOT						L#G2SMT		

C\P	37	38	39	40	41	42	43	44	45	46	47	48
n	L#G3TAG			L#G3P1T			L#G3P2T			L#G3SAT		
n+1	L#G3F1T			L#G3FOT						L#G3SMT		

C\P	49	50	51	52	53	54	55	56	57	58	59	60
n	L#G4TAG			L#G4P1T			L#G4P2T			L#G4SAT		
n+1	L#G4F1T			L#G4FOT						L#G4SMT		

C\P	61	62	63	64	65	66	67	68	69	70	71	72
n	L#G5TAG			L#G5P1T			L#G5P2T			L#G5SAT		
n+1	L#G5F1T			L#G5FOT						L#G5SMT		

C\P	73	74	75	76	77	78	79	80	81	82	83	84
n	L#G6TAG			L#G6P1T			L#G6P2T			L#G6SAT		
n+1	L#G6F1T			L#G6FOT						L#G6SMT		

C\P	85	86	87	88	89	90	91	92	93	94	95	96
n	L#G7TAG			L#G7P1T			L#G7P2T			L#G7SAT		
n+1	L#G7F1T			L#G7FOT						L#G7SMT		

C\P	97	98	99	100	101	102	103	104	105	106	107	108
n	L#G8TAG			L#G8P1T			L#G8P2T			L#G8SAT		
n+1	L#G8F1T			L#G8FOT						L#G8SMT		

7.0 DATA MAPPING

This section provides loop and station data mappings for Modbus, LIL (Local Instrument Link), and Ethernet.

Connector P1 on the control carrier is an MMJ11, RS232 port for Modbus communications over a shorter distance. Terminals NCA and NCB on the control carrier are for RS485 communications over a longer distance. These terminals are used for either Modbus or LIL (when the optional LIL board is installed). The network typically interconnects:

- A Model 353R, 352*Plus*, 353 or 354N Controller and a computer running i|ware-PC™, ProcessSuite™, MYCROADVANTAGE™ or other operator interface software that includes the communication driver (e.g. Modbus, LIL (using a Model 320 ICI), or OPC Ethernet) in the controller
- A Model 353R, 352*Plus*, 353 or 354N Controller and an APACS+® Model 39ACM Advanced Control Module using Modbus or LIL

Note

Model 353 Design Level "B" has Ethernet and Modbus communications standard. Model 353 Design Level "A" has Modbus standard with LIL or Ethernet optional.

The network is used to upload data from the station to the computer or workstation for process and alarm monitoring, additional processing of the data for inventory management and accounting, and process and equipment troubleshooting. Data can be downloaded to the station to change setpoint or valve value, change control mode, and acknowledge alarms.

With the Ethernet option, data is accessed using Modbus commands embedded within the TCP protocol, commonly known as the Open Modbus/TCP Protocol. Connector P4 on the control carrier is an RJ45 Ethernet port for connecting to a local or remote client.

Proprietary data transfers associated with configuration upload/download or on-line monitoring associated with the i|config™ Graphical Configuration Utility are not described. Function blocks, parameters, and commands are identified by the MPU Controller board firmware version in which they were implemented. For example, those implemented in version 1.3 are identified, usually by "(V1.3)", those implemented by 2.0 as "V2.0" and those implemented by 2.4 as "V2.4."

7.1 CONNECTING TO APACS

A Model 39ACM (Advanced Control Module) supports both Modbus and LIL connections. Use the standard Modbus Master Function Block Library to communicate with a station. When requesting Modbus data, do not exceed 48 coils or 60 registers per request. A LIL function block library (P/N 15939-625V4.00 ACM Serial Communication FB Library LIL) that provides a method for connecting the ACM to standard LIL stations is available. The library includes a Model 352P/353/354 Loop block. The current release of the library maps the 352P/353/354 as having 3-loops located at channels 8, 13, and 18. Therefore, it is necessary to configure ODC function blocks for these channels. It is expected that later releases of the library will allow multiple loops, up to maximum allowed. Also, data from additional loops can be obtained by using a combination of other library functions such as LIL_GBL, LIL_NGBL, and LIL_CMD.

7.2 CONNECTING TO MYCROADVANTAGE

Model 320 Driver

MYCROADVANTAGE provides a LIL (320) driver that will communicate with stations on a Local Instrument Link (LIL). Standard, predefined parameter tables for many LIL products (e.g. Models 351 and 352) are within MYCROADVANTAGE to simplify configuration. MYCROADVANTAGE release 3.32 does not include a Model 352P/353/354 predefined parameter table. However, when up to three control loops are to be configured in a Model 352P, 353 Design Level A, or 354, use the Model 351 predefined parameter table and configure the ODC blocks in the loops to channels 8, 13, and 18. This method will work since the loop data in the controller is the same as a 351and is located at the same relative offsets as in a 351. Loops can also be configured individually. Details on the configuration can be found the MYCROADVANTAGE user manual.

Modbus Driver

MYCROADVANTAGE provides a Modbus driver for communicating with up to 32 stations through a single COM port. There are a few considerations when communicating with a Model 352P, 353 or 354 using the Modbus driver.

- Loop data is available as integer or floating point. When integer is used, more data is obtained with a single command, thus improving the communication throughput. When integer data is used, ranges can be scaled using 3:Linear function MX+B scaling.
- The MODBUS.DAT file must be modified. Under the section [Address Chunk Range], set "UseDefault=0", under section [Address Size], set "itChunkSize=48" and "WordChunkSize=60".

7.3 CONNECTING TO PROCESSSUITE

RealTime I/O Server

An optional LIL RealTime I/O Server is available to communicate with the Model 320 ICI (Independent Computer Interface). The 320 communicates over the Local Instrument Link (LIL) with other stations that have the LIL option boards installed. Refer to the literature provided with the LIL RealTime I/O Server for proper operation. Optimize LIL performance by using Global Data, especially for data that is updated on each scan such as the process, setpoint, valve, loop status, and alarm I. Use individual parameter requests only to obtain data not required frequently (e.g. tuning parameters, range scaling).

Modbus I/O Server

A Modbus I/O Server comes with Process Suite and it can be used to communicate with the controller. Refer to the Modbus I/O Server instructions for operating details. Certain parameter settings are critical. In the Topic Definition, use the 584/984 slave type. Set the maximum coil reads to 48 and maximum register reads to 60. Maximum coil writes can be set to the minimum allowed value of 8 and register writes to 2.

7.4 CONNECTING TO I|WARE PC

Modbus OPC Server

The i|ware-PC Operator Interface software includes a Modbus OPC server that when connected to the controller can auto populate its database with the number and type of loops configured in the station. All tag names used in the OPC database will be the same as listed in this manual.

LIL OPC Server

The i|ware-PC Operator Interface software includes an LIL OPC server that when connected to the controller can auto populate its database with the number and type of loops configured in the station. All tag names used in the LIL OPC database will be the same as listed in this manual.

Ethernet OPC Server

The i|ware PC Operator Interface software is an OPC Client and can be connected to an OPC server. An Ethernet OPC server using the Open Modbus/TCP Protocol is available to obtain data from single or multiple loop controllers and server the data to OPC clients.

Modbus Application Note: *Refer to application document AD353-108 for information on using Modbus communications with controller products.*

7.5 STATION DATA

A station contains some data that pertains to the entire station and some to individual loops. Station data, available over the network, is part of the station function block (STATN) configuration and is mapped to fixed locations in Modbus registers or coils and fixed channel/parameters when the optional LIL board is installed. Loop data (detailed in the next section) can be associated with a Controller "Control Loop" or a Sequencer "Sequencer Loop" as defined by the selection of the operator display: ODC "Operator Display for Controller" or ODS "Operator Display for Sequencer". Much of the analog data is available is two formats. The first is 16-bit values, scaled consistent with previous LIL products, enabling integration into existing LIL systems. This data type also provides Modbus masters, unable to handle 32-bit floating point, a method for obtaining data from the station.

The second is the standard 32-bit IEEE floating point format consistent with the actual data in the station. This data type is contained in two consecutive registers or parameters. When using Modbus the LSW is first and the MSW second. When using LIL, the first parameter contains the MSW and the second parameter the LSW. Boolean values are packed into 16-bit words for LIL use and are available in coils when using Modbus. String data, formatted as 2 ASCII characters per word with the left-most character in the most significant byte, containing tag, units, and message information is available with Modbus and LIL. Most station data is 'Read Only' except for:

- SE (Station Error) parameter that allows a write of $0000 to reset the current error as an acknowledgment
- SSW (Station Status Word) parameter which allows writes to certain bits (coils)
- MLTP (Modbus Loop Trend Pointer, included in version 1.30 firmware) parameter
- AASEL (Active Acknowledged Station Error Log, included in version 1.30 firmware) parameter
- and other items as noted below

7.5.1 Integer Data (16-bit Integer)

Code	R/W	Description	Range	Register (MB)	C/P (LIL)
GDS	R	Global Data Size (LIL)	7-256 ($0007-$0100)	n/a	1/1
ST	R	Station Type	6 ($0006)	40001	2/1
SSW	R/W	Station Status Word	(see Station Status Word)	(see coils)	3/1
SE	R/W	Station Error	0-32767($00000-$7FFF)	40002	4/1
NCL	R	No. of Control Loops (# of ODC)	0-255($0000-$00FF)	40003	5/1
NSL	R	No. of Seq. Loops (# of ODS)	0-255($0000-$00FF)	40004	6/1
RAM	R	RAM Size (size in K bytes)	0-65535($0000-$FFFF)	40005	1/2
CBT	R	Controller Board Type	(see below)	40006	1/3
CBSR	R	Controller Board Software Rev. #	(see below)	40007	1/4
EBT	R	Exp. I/O Board Type	(see below)	40008	1/5
EBSR	R	Exp. I/O Board Software Rev. #	(see below)	40009	1/6
RBT	R	Remote I/O Board Type (A-1)	(see below)	40010	1/7
RBSR	R	Remote I/O (A-1) Software Rev. #	(see below)	40011	1/8
NBT	R	Network Board Type (B-1)	(see below)	40012	1/9
NBSR	R	Network (B-1) Software Rev. #	(see below)	40013	1/10
OAT	R	Option Board A Type (A-2)	(see below)	40014	1/11
OASR	R	Option A (A-2) Software Rev. #	(see below)	40015	1/12
OBT	R	Option Board B Type (B-2)	(see below)	40016	1/13
OBSR	R	Option B (B-2) Rev #	(see below)	40017	1/14
OFT	R	Operator Faceplate Type	(see below)	40018	1/15
DRN	R	Model 353 Database Rev. No.	0-32767($0000-$7FFF)	40019	2/8
CWT	R	Computer Watchdog Timer (sec)	0-1000 ($0000-$03F8)	40020	3/2
KSR	R	Kernel Software Rev. #	(see below)	40021	1/16
CT	R	Cycle Time (msec)	0-32767($00000-$7FFF)	40022	3/4
LxT	R	Loop - Type	(0-5)	40023-40047	n/a
		(0-none; 1-controller; 2-sequencer; 3-analog ind., V2.2; 4-discrete ind. V2.2; 5-pushbuttons V2.2)			
MSLCP	R/W	Modbus Seq. Loop Config. Pt	0-25 ($0000-$0019)	40048	n/a
LSLCP	R/W	LIL Seq. Loop Config. Pointer	0-25 ($0000-$0019)	n/a	7/1
SA	R/W	Station Address	0-250 ($0000-$00FA)	40049	3/3
RTS	R/W	Front Port RTS	1-3 ($0001-$0003)	40050	3/5
		reserved		40051-40057	1/17-23

MLTP	R/W	Modbus Loop Trend Pointer *(V1.3)*	0-25 ($0000-$0019)	40058	n/a
NLTB	R	Number of Loop Trend Blocks *(V1.3)*	0-5 ($0000-$0005)	40059	n/a
AASEL	R/W	Active Ack'd Station Error Log *(V1.3)*	0-33767($0000-$7FFF)	40060	4/6
STY	R/W*(1)*	Standard Time in Years	1997-	40061	3/6 (V2.0)
STM	R/W*(1)*	Standard Time in Months	1-12	40062	3/7 (V2.0)
STD	R/W*(1)*	Standard Time in Days	1-31	40063	3/8 (V2.0)
STH	R/W*(1)*	Standard Time in Hours	0-23	40064	3/9 (V2.0)
STMN	R/W*(1)*	Standard Time in Minutes	0-59	40065	3/10 (V2.0)
STSC	R/W*(1)*	Standard Time in Seconds	0-59	40066	3/11 (V2.0)
NAL	R	No. of Analog Ind. Loops (ODA)	0-255($0000-$00FF)	40067	5/37 (V2.2)
NDL	R	No. of Discrete Ind. Loops (ODD)	0-255($0000-$00FF)	40068	6/37 (V2.2)
NDP	R	No. of Pushbutton Loops (ODP)	0-255($0000-$00FF)	40069	7/37 (V2.2)
IPA1	R	IP Address *(2)*	1: 0-255, 2: 0-255	40070	n/a (V2.4)
IPA2	R	IP Address *(2)*	3: 0-255, 4: 0-255	40071	n/a (V2.4)
IPG1	R	IP Gateway Address *(4)*	1: 0-255, 2: 0-255	40072	n/a (V2.4)
IPG2	R	IP Gateway Address *(4)*	3: 0-255, 4: 0-255	40073	n/a (V2.4)
IPM1	R	IP Mask *(3)*	1: 0-255, 2: 0-255	40074	n/a (V2.4)
IPM2	R	IP Mask *(3)*	3: 0-255, 4: 0-255	40075	n/a (V2.4)
EBS	R	Ethernet Board Speed (0 - auto, 1 - 10M, 2 - 100M		40076	n/a (V2.4)
EBD	R	Ethernet Board Duplex (0 - auto, 1 - half duplex, 2 - full duplex)		40077	n/a (V2.4)
PPR	R	Ethernet Board Peer-to-Peer Rate (0.25, 0.5, 1, 2, 5, or 10 sec)		40027	n/a (V2.4)
Spares				40079-40100	
C_S	R	Control Loop Starting Chan. LIL	8-250 ($0008-$00FA)	n/a	5/2-5/26
S_S	R	Seq. Loop Starting Chan. LIL	8-250 ($0008-$00FA)	n/a	6/2-6/26
A_S	R	Analog Indicator - Starting Chan. LIL	8-250 ($0008-$00FA)	n/a	5/38-5/62 (V2.2)
D_S	R	Discrete Indication - Starting Chan. LIL	8-250 ($0008-$00FA)	n/a	6/38-6/62 (V2.2)
P_S	R	PB Indication - Starting Chan. LIL	8-250 ($0008-$00FA)	n/a	7/38-7/62 (V2.2)
SCR	R	Starting Configuration Record	0- ($0000-)		2/13
NCR	R	Number of Configuration Records	0- ($0000-)		2/14
LxZ	R	Loop x Parm. Z Starting Channel	8-250 ($0008-00FA)	n/a	7/16-7/36. 6/36

Software Revisions:

Development Release	MSB	128 to 255 ($80-$FF)
Major Rev.	MSB	1 to 127 ($00-$7F) *(5)*
Minor Rev.	LSB	0 to 255 ($00-$FF)

Hardware Type and Revisions:

Type	MSB	1 to 15 ($01-$0F) *(5)*
Rev.	LSB	1 to 15 ($01-$0F)

(1) The controller time should be changed one parameter at a time and then verified before writing the next parameter (i.e. for Modbus use command 06 and not command 16 and LIL use a single parameter send). The change to each parameter will take approximately 1 to 2 seconds each.

(2) IP Address format (nnn.nnn.nnn.nnn) 1,2,3,4 (default is 192.168.0.2)

(3) IP Mask format (nnn.nnn.nnn.nnn) 1,2,3,4 (default is 255.255.255.0)

(4) IP Gateway format (nnn.nnn.nnn.nnn.) 1,2,3,4 (default is 197.168.0.1)

(5) A Major SW Rev. of 0 = no software included & a Hardware Type of 0 = not installed

7.5.2 Station String Data (8-bit ASCII Char - 2/Word)

Code	R/W	Description	Range	Register (MB)	C/P (LIL)
STAG	R	Station Tag	12 ASCII Char	40101-40106	2/2-7
CFNR	R	Configuration File Name Reduced	8 ASCII Char	n/a	2/9-12
CFN	R	Configuration File Name	20 ASCII Char	40107-40116	7/2-7/12
SN	R	Station Serial No.	8 ASCII (0-99999999	40117-40120	4/2-4/5
		Spares	0($0000)	40121-40199	

7.5.3 Station Coil Data (1-bit)

Code	R/W	Description	Range	Coil (MB)	C/P (LIL)
ASE	R	1-Active Station Event	1/0	00001	3/1(0)
SEN	R/W	1-Station Event Not Ackl'd	1/0	00002	3/1(1)
FSB	R	1- Flashing Station Bargraph	1/0	00003	3/1(2)
SDV	R	1- Station Database Valid	1/0	00004	3/1(3)
CCL	R	Config Change Counter LSB (bit)	1/0	n/a	3/1(4)
CCH	R	Config Change Counter MSB (bit)	1/0	n/a	3/1(5)
SCH	R	1-Station Configuration Hold	1/0	00007	3/1(6)
SRB	R/W	1-Station Run Bit	1/0	00008	3/1(7)
OOS	R/W	1-Station Alarms Out of Service	1/0	00009	3/1(8) V2.0
		(spares)	0	00010-00014	3/1(9-10)
CC1	R/W	Config Change Bit #1	1/0	n/a	3/1(11)
CC2	R/W	Config Change Bit #2	1/0	n/a	3/1(12)
CC3	R/W	Config Change Bit #3	1/0	n/a	3/1(13)
SEB	R	1-Station Error Bit	1/0	00015	3/1(14)
		(spare)	0	00016	3/1(15)
		spares	0($0000)	00017-00071	

7.5.4 Station Status Word (SSW)

[channel 3/parameter 1]

BIT	Description	Value	Block	Read/Write	Output
0	Active Station Event (ASE)	1-Active Event		R	
1	Station Event Not Ack'd (SEN)	1-Not Acknowledged		R/W	
2	Flashing Bargraph (FSB)	1-Flashing Bargraph		R	
3	Database Valid (SDV)	1-Valid		R	
4	Config Change Counter LSB	1/0		R	
5	Config Change Counter MSB	1/0		R	
6	Configuration Hold (SCH)	1-Hold		R	
7	Station Run Bit (SRB)	1-Run		R	
8	Stations Alarms Out of Service	1-OOS		R/W	
9	(not used)	0		R	
10	(not used)	0		R	
11	Config. Change #1	1-Config. Changed		R/W	
12	Config. Change #2	1-Config. Changed		R/W	
13	Config. Change #3	1-Config. Changed		R/W	
14	Station Error Bit (SEB)	1-Error		R	
15	(not used)	0		R	

7.6 LOOP DATA

Loop data is grouped into several categories. The groupings are not as significant when using the LIL option as all LIL data has been mapped consistent with previous LIL products using Global and Non-Global data. However, when using Modbus, the groupings enable single data requests (up to 60 Words/Register or 48 Coils) to obtain similar data with a single command. The loop will have different data if assigned as a controller type (i.e. using the ODC block), a sequencer type (i.e. using the ODS block), an Analog Indicator Display (i.e. using the ODA block), a Discrete Indicator Display (i.e. using the ODD block) or Pushbutton/Switch Operation (i.e. using the ODP block).

a) Dynamic data may change value on each controller scan and/or is not identified as being changed by the data base change bit (coil). This category of data usually needs to be updated by a workstation every few seconds.

b) Variable data changes periodically. It is usually associated with on-line operation at a workstation but may only need to be updated on a lower periodic basis or when a data base change is indicated.

c) Static data is similar to variable data but has a lower update requirement. The data may only need updating when a change is indicated or to verify a previous change made to a parameter.

d) String data contains tag names, units, and messages.

7.6.1 Dynamic Loop Integer Data

7.6.1.1 Controller [ODC]

Code	R/W	Description	Range	Register (MB)	C/P (LIL)
L#PI	R	Process (%)	-3.3 to 103.3 ($0-$0FFF)	40201+10(#-1)	n/1
L#SI	R/W	Setpoint (%)	-3.3 to 103.3 ($0-$0FFF)	40202+10(#-1)	n+1/1
L#VI	R/W	Valve (%)	-3.3 to 103.3 ($0-$0FFF)	40203+10(#-1)	n+2/1
L#XI	R	X Variable (%)	-3.3 to 103.3 ($0-$0FFF)	40204+10(#-1)	n+3/24
L#YI	R	Y Variable (%)	-3.3 to 103.3 ($0-$0FFF)	40205+10(#-1)	n+4/24
L#RI	R/W	Ratio	0.00 to 38.40($80-$0F80)	40206+10(#-1)	n/7
L#BI	R/W	Bias	100-0-100 ($80-$0F80)	40207+10(#-1)	n/8
L#TLmI	R	Totalizer - 3 ms (whole) digits	0-999 ($0000-$03E7)	40208+10(#-1)	n+2/2
L#TLlI	R	Totalizer - 3 ls (whole) digits	0-999 ($0000-$03E7)	40209+10(#-1)	n+2/3
CLS	R/W	Control Loop Status	(see CLS)	(see coils)	n+3/1
ASW	R/W	Alarm Status Word	(see ASW)	(see coils)	n+4/1
L#PCSW	R	PCOM Block Status Word *(V1.3)*	1-7 ($0001-$0007)	40210+10(#-1)	z+2/1

7.6.1.2 Sequencer [ODS]

Code	R/W	Description	Range	Register (MB)	C/P (LIL)
L#SSNI	R	Sequencer Step No.	0-250 ($0000-$00FA)	40201+10(#-1)	n/1
L#SNSI	R	Sequencer Number of Steps	0-250 ($0000-$00FA)	40202+10(#-1)	n/4
L#SNGI	R	Sequencer Number of Groups	0-16 ($0000-$0010)	40203+10(#-1)	n/5
L#SLS	R/W	Sequencer Loop Status	(see SLS)	(see coils)	n+5/1
L#SNRI	R	Sequencer Number of Recipes	0-9 ($0000-$0009)	40204+10(#-1)	n/11
L#CRNI	R/W	Current Recipe Number	0-9 ($0000-$0009)	40205+10(#-1)	n+3/1
L#PCSW	R	PCOM Block Status Word *(V1.3)*	1-7 ($0001-$0007)	40206+10(#-1)	z+2/1
L#TACM	R	Total Active Conditional Msgs *(V1.3)*	0-64 $0000-$0040)	40207+10(#-1)	n/43
		(spare)	0 ($0000)	40208+10(#-1)	
…..	…..	…..	…..	…..	…..
		(spare)	0 ($0000)	40210+10(#-1)	

7.6.1.3 Analog Indicator [ODA] - (V2.2)

Code	R/W	Description	Range	Register (MB)	C/P (LIL)
L#P1I	R	Process 1 (%)	-3.3 to 103.3 ($0-$0FFF)	40201+10(#-1)	n/1
L#P2I	R	Process 2 (%)	-3.3 to 103.3 ($0-$0FFF)	40202+10(#-1)	n+1/1
L#P3I	R	Process 3 (%)	-3.3 to 103.3 ($0-$0FFF)	40203+10(#-1)	n+2/1
L#P4I	R	Process 4 (%)	-3.3 to 103.3 ($0-$0FFF)	40204+10(#-1)	n+3/1
L#SW1	R/W	Status Word 1	(see SW1)	(see coils)	n+4/1
L#SW2	R/W	Status Word 2	(see SW1)	(see coils)	n+5/1

7.6.1.4 Discrete Indicator [ODD] - (V2.2)

Code	R/W	Description	Range	Register (MB)	C/P (LIL)
L#DISW	R/W	Discrete Input Status Word	(see L#DISW)	(see coils)	n/1
L#DSSW	R/W	Discrete State Status Word	(see L#DSSW)	(see coils)	n+1/1
L#DOSW	R/W	Discrete Output Status Word	(see L#DOSW)	(see coils)	n+2/1
L#SW	R/W	Status Word	(see L#SW)	(see coils)	n+3/1

7.6.1.5 Discrete Indicator [ODP] - (V2.2)

Code	R/W	Description	Range	Register (MB)	C/P (LIL)
L#SW1	R/W	Status Word 1	(see L#SW1)	(see coils)	n/1
L#SW2	R/W	Status Word 2	(see L#SW2)	(see coils)	n+1/1

7.6.2 Variable Loop Integer Data

7.6.2.1 Controller [ODC]

Code	R/W	Description	Range	Register (MB)	C/P (LIL)
L#TSPI	R/W	Target Setpoint (%)	-3.3 to 103.3 ($0-$0FFF)	40451+30(#-1)	n+1/2
L#HLI	R/W	Setpoint High Limit (%)	-3.3 to 103.3 ($0-$0FFF)	40452+30(#-1)	n+1/4
L#LLI	R/W	Setpoint Low Limit (%)	-3.3 to 103.3 ($0-$0FFF)	40453+30(#-1)	n+1/5
L#RTI	R/W	Setpoint Ramp Time (min)	0-3840($0080-$0F80)	40454+30(#-1)	n+1/3
L#RRI	R/W	Setpoint Ramp Rate (%/min)	-3.3 to 103.3 ($0-$0FFF)	40455+30(#-1)	n+1/6
L#A1LI	R/W	Alarm 1 Limit (%)	-3.3 to 103.3 ($0-$0FFF)	40456+30(#-1)	n+4/2
L#A2LI	R/W	Alarm 2 Limit (%)	-3.3 to 103.3 ($0-$0FFF)	40457+30(#-1)	n+4/3
L#A3LI	R/W	Alarm 3 Limit (%)	-3.3 to 103.3 ($0-$0FFF)	40458+30(#-1)	n+4/4
L#A4LI	R/W	Alarm 4 Limit (%)	-3.3 to 103.3 ($0-$0FFF)	40459+30(#-1)	n+4/5
L#T1mI	R/W	Tot. Preset 1 - 3 ms whole digits	0-999 ($0000-$03E7)	40460+30(#-1)	n+2/4
L#T1lI	R/W	Tot. Preset 1 - 3 ls whole digits	0-999 ($0000-$03E7)	40461+30(#-1)	n+2/5
L#T2mI	R/W	Tot. Preset 2 - 3 ms whole digits	0-999 ($0000-$03E7)	404621+30(#-1)	n+2/6
L#T2lI	R/W	Tot. Preset 2 - 3 ls whole digits	0-999 ($0000-$03E7)	40463+30(#-1)	n+2/7
L#A1TW	R/W	Alarm 1 Type Word	(bit mapped - see ATW)	n/a	n+4/6
L#A2TW	R/W	Alarm 2 Type Word	(bit mapped - see ATW)	n/a	n+4/7
L#A3TW	R/W	Alarm 3 Type Word	(bit mapped - see ATW)	n/a	n+4/8
L#A4TW	R/W	Alarm 4 Type Word	(bit mapped - see ATW)	n/a	n+4/9
L#A1TI	R/W	Alarm 1 Type	0-6 ($0000-$0006)	40464+30(#-1)	n+4/37
L#A2TI	R/W	Alarm 2 Type	0-6 ($0000-$0006)	40465+30(#-1)	n+4/38
L#A3TI	R/W	Alarm 3 Type	0-6 ($0000-$0006)	40466+30(#-1)	n+4/39
L#A4TI	R/W	Alarm 4 Type	0-6 ($0000-$0006)	40467+30(#-1)	n+4/40
L#A1PI	R/W	Alarm 1 Priority	1-5 ($0001-$0005)	40468+30(#-1)	n+4/41
L#A2PI	R/W	Alarm 2 Priority	1-5 ($0001-$0005)	40469+30(#-1)	n+4/42
L#A3PI	R/W	Alarm 3 Priority	1-5 ($0001-$0005)	40470+30(#-1)	n+4/43
L#A4PI	R/W	Alarm 4 Priority	1-5 ($0001-$0005)	40471+30(#-1)	n+4/44
L#CAI	R/W	Controller Action	1-DIR, 0-REV	40472+30(#-1)	n+1/7
		(spare)	0 ($0000)	40473+30(#-1)	
…..	…..	…..	…..	…..	…..
		(spare)	0 ($0000)	40480+30(#-1)	

7.6.2.2 Sequencer [ODS] - (MASK Configurations)

Code	R/W	Description	Range	Register (MB)	C/P (LIL)
L#S001G0I	R/W	Step 1 Group 0 Input Mask	$0000-$FFFF	40451+30(#-1)	1/154
L#S001G0O	R/W	Step 1 Group 0 Output Mask	$0000-$FFFF	40452+30(#-1)	1/170
L#S001G1I	R/W	Step 1 Group 1 Input Mask	$0000-$FFFF	40453+30(#-1)	1/155
L#S001G1O	R/W	Step 1 Group 1 Output Mask	$0000-$FFFF	40454+30(#-1)	1/171
L#S001G2I	R/W	Step 1 Group 2 Input Mask	$0000-$FFFF	40455+30(#-1)	1/156
L#S001G2O	R/W	Step 1 Group 2 Output Mask	$0000-$FFFF	40456+30(#-1)	1/172
L#S002G0I	R/W	Step 2 Group 0 Input Mask	$0000-$FFFF	40457+30(#-1)	2/154
L#S002G0O	R/W	Step 2 Group 0 Output Mask	$0000-$FFFF	40458+30(#-1)	2/170
…..	…..	…..	…..	…..	…..
L#S005G0O	R/W	Step 5 Group 0 Output Mask	$0000-$FFFF	40476+30(#-1)	5/170
L#S005G1I	R/W	Step 5 Group 1 Input Mask	$0000-$FFFF	40477+30(#-1)	5/155
L#S005G1O	R/W	Step 5 Group 1 Output Mask	$0000-$FFFF	40478+30(#-1)	5/171
L#S005G2I	R/W	Step 5 Group 2 Input Mask	$0000-$FFFF	40479+30(#-1)	5/156
L#S005G2O	R/W	Step 5 Group 2 Output Mask	$0000-$FFFF	40480+30(#-1)	5/172

7.6.2.3 Analog Indicator [ODA] - (V2.2)

Code	R/W	Description	Range	Register (MB)	C/P (LIL)
L#P1ALI	R/W	Process 1 Alarm A Limit (%)	-3.3 to 103.3 ($0-$0FFF)	40451+30(#-1)	n+1/13
L#P1BLI	R/W	Process 1 Alarm B Limit (%)	-3.3 to 103.3 ($0-$0FFF)	40452+30(#-1)	n+1/14
L#P2ALI	R/W	Process 2 Alarm A Limit (%)	-3.3 to 103.3 ($0-$0FFF)	40453+30(#-1)	n+1/15
L#P2BLI	R/W	Process 2 Alarm B Limit (%)	-3.3 to 103.3 ($0-$0FFF)	40454+30(#-1)	n+1/16
L#P3ALI	R/W	Process 3 Alarm A Limit (%)	-3.3 to 103.3 ($0-$0FFF)	40455+30(#-1)	n+1/17
L#P3BLI	R/W	Process 3 Alarm B Limit (%)	-3.3 to 103.3 ($0-$0FFF)	40456+30(#-1)	n+1/18
L#P4ALI	R/W	Process 4 Alarm A Limit (%)	-3.3 to 103.3 ($0-$0FFF)	40457+30(#-1)	n+1/19
L#P4BLI	R/W	Process 4 Alarm B Limit (%)	-3.3 to 103.3 ($0-$0FFF)	40458+30(#-1)	n+1/20
L#P1ATI	R/W	Process 1 Alarm A Type	0-3 ($0000-$0003)	40459+30(#-1)	n+2/13
L#P1BTI	R/W	Process 1 Alarm B Type	0-3 ($0000-$0003)	40460+30(#-1)	n+2/14
L#P2ATI	R/W	Process 2 Alarm A Type	0-3 ($0000-$0003)	40461+30(#-1)	n+2/15
L#P2BTI	R/W	Process 2 Alarm B Type	0-3 ($0000-$0003)	40462+30(#-1)	n+2/16
L#P3ATI	R/W	Process 3 Alarm A Type	0-3 ($0000-$0003)	40463+30(#-1)	n+2/17
L#P3BTI	R/W	Process 3 Alarm B Type	0-3 ($0000-$0003)	40464+30(#-1)	n+2/18
L#P4ATI	R/W	Process 4 Alarm A Type	0-3 ($0000-$0003)	40465+30(#-1)	n+2/19
L#P4BTI	R/W	Process 4 Alarm B Type	0-3 ($0000-$0003)	40466+30(#-1)	n+2/20
L#P1API	R/W	Process 1 Alarm A Priority	1-5 ($0001-$0005)	40467+30(#-1)	n+3/13
L#P1BPI	R/W	Process 1 Alarm B Priority	1-5 ($0001-$0005)	40468+30(#-1)	n+3/14
L#P2API	R/W	Process 2 Alarm A Priority	1-5 ($0001-$0005)	40469+30(#-1)	n+3/15
L#P2BPI	R/W	Process 2 Alarm B Priority	1-5 ($0001-$0005)	40470+30(#-1)	n+3/16
L#P3API	R/W	Process 3 Alarm A Priority	1-5 ($0001-$0005)	40471+30(#-1)	n+3/17
L#P3BPI	R/W	Process 3 Alarm B Priority	1-5 ($0001-$0005)	40472+30(#-1)	n+3/18
L#P4API	R/W	Process 4 Alarm A Priority	1-5 ($0001-$0005)	40473+30(#-1)	n+3/19
L#P4BPI	R/W	Process 4 Alarm B Priority	1-5 ($0001-$0005)	40474+30(#-1)	n+3/20
…..	…..	…..	…..	…..	…..
		(spare)	0 ($0000)	40480+30(#-1)	

7.6.2.4 Discrete Indicator [ODD] - (V2.2)

Code	R/W	Description	Range	Register (MB)	C/P (LIL)
n/a					

7.6.2.5 Discrete Indicator [ODP] - (V2.2)

Code	R/W	Description	Range	Register (MB)	C/P (LIL)
n/a				****	

NOTE

Registers (40451-40480) are reserved for ASCII Tags when the ODP display has been selected in configuration.

7.6.3 Static Loop Integer Data

7.6.3.1 Controller [ODC]

Code	R/W	Description	Range	Register (MB)	C/P (LIL)
L#PGI	R/W	Proportional Gain	-9.99 to -0.01 ($1419-$17FF) 0.01 to 9.99 ($1801$1BE7) -100.0 to -10.0 ($2418-$279C) 10.0 to 100.0 ($2864-$2BE8)	41201+30(#-1)	n/2
L#TII	R/W	Integral Time (min)	0.01 to 9.99 ($2081-$2467) 10.0 to 99.9 ($10E4-$1467) 100 to 3967 ($30E4-$3FFF)	41202+30(#-1)	n/3
L#TDI	R/W	Derivative Time (min)	0.00 to 9.99 ($2080-$2467) 10.0 to 100.0 ($10E4-$1468)	41203+30(#-1)	n/4
L#DGI	R/W	Derivative Gain	1.00 to 39.67 ($20E4--$2FFF)	41204+30(#-1)	n/5
L#MRI	R/W	Manual Reset (%)	0.0 to 100.0 ($0080-$0F80)	41205+30(#-1)	n/6
L#RHI	R	Range High	-1 to -32768 ($FFFF-$8000) 0 to 32767 ($0000-$7FFF)	41206+30(#-1)	n+3/10
L#RLI	R	Range Low	-1 to -32768 ($FFFF-$8000) 0 to 32767 ($0000-$7FFF)	41207+30(#-1)	n+3/11
L#DPPI	R	Decimal Point Position	0 to 5 ($0000-$0005)	41208+30(#-1)	n+3/12
L#PDPPI	R	Process DPP	0 to 5 ($0000-$0005)	41209+30(#-1)	n/34
L#VDPPI	R	Valve DPP	0 to 5 ($0000-$0005)	41210+30(#-1)	n+2/34
L#XDPPI	R	Variable X DPP	0 to 5 ($0000-$0005)	41211+30(#-1)	n+3/34
L#YDPPI	R	Variable Y DPP	0 to 5 ($0000-$0005)	41212+30(#-1)	n+4/34
		(spare)	0 ($0000)	41213+30(#-1)	
…..	…..	…..	…..	…..	…..
		(spare)	0 ($0000)	41230+30(#-1)	

7.6.3.2 Sequencer [ODS] - (MASK Configurations)

Code	R/W	Description	Range	Register (MB)	C/P (LIL)
L#S006G0I	R/W	Step 6 Group 0 Input Mask	$0000-$FFFF	41201+30(#-1)	6/154
L#S006G0O	R/W	Step 6 Group 0 Output Mask	$0000-$FFFF	41202+30(#-1)	6/170
L#S006G1I	R/W	Step 6 Group 1 Input Mask	$0000-$FFFF	41203+30(#-1)	6/155
L#S006G1O	R/W	Step 6 Group 1 Output Mask	$0000-$FFFF	41204+30(#-1)	6/171
L#S006G2I	R/W	Step 6 Group 2 Input Mask	$0000-$FFFF	41205+30(#-1)	6/156
L#S006G2O	R/W	Step 6 Group 2 Output Mask	$0000-$FFFF	41206+30(#-1)	6/172
L#S007G0I	R/W	Step 7 Group 0 Input Mask	$0000-$FFFF	41207+30(#-1)	7/154
L#S007G0O	R/W	Step 7 Group 0 Output Mask	$0000-$FFFF	41208+30(#-1)	7/170
…..	…..	…..	…..	…..	…..
L#S009G2I	R/W	Step 9 Group 2 Input Mask	$0000-$FFFF	41223+30(#-1)	9/156
L#S009G2O	R/W	Step 9 Group 2 Output Mask	$0000-$FFFF	41224+30(#-1)	9/172
L#S010G0I	R/W	Step 10 Group 0 Input Mask	$0000-$FFFF	41225+30(#-1)	10/154
L#S010G0O	R/W	Step 10 Group 0 Output Mask	$0000-$FFFF	41226+30(#-1)	10/170
L#S010G1I	R/W	Step 10 Group 1 Input Mask	$0000-$FFFF	41227+30(#-1)	10/155
L#S010G1O	R/W	Step 10 Group 1 Output Mask	$0000-$FFFF	41228+30(#-1)	10/171
L#S010G2I	R/W	Step 10 Group 2 Input Mask	$0000-$FFFF	41229+30(#-1)	10/156
L#S010G2O	R/W	Step 10 Group 2 Output Mask	$0000-$FFFF	41230+30(#-1)	10/172

7.6.3.3 Analog, Discrete, & Pushbutton Indicators [ODA] ODD] [ODP]- (V2.2)

Code	R/W	Description	Range	Register (MB)	C/P (LIL)
n/a				See Note	

NOTE

Registers (40451-40480) are reserved for ASCII Tags when the ODP display has been selected in configuration.

7.6.4 Dynamic Loop Floating Point Data (32-bit IEEE*)*

7.6.4.1 Controller [ODC]

Code	R/W	Description	Range	Register (MB)	C/P (LIL)
L#PF	R	Process	Real	41951+20(#-1)	n/9-10
L#SF	R/W	Setpoint	Real	41953+20(#-1)	n+1/9-10
L#VF	R/W	Valve	Real	41955+20(#-1)	n+2/9-10
L#XF	R	X Variable	Real	41957+20(#-1)	n+3/25-26
L#YF	R	Y Variable	Real	41959+20(#-1)	n+4/25-26
L#RF	R/W	Ratio	Real	41961+20(#-1)	n/23-24
L#BF	R/W	Bias	Real	41963+20(#-1)	n/25-26
L#TLF	R	Totalizer	Real	41965+20(#-1)	n+3/13-14
		(spare)	($00000000)	41967+20(#-1)	
		(spare)	($00000000)	41969+20(#-1)	

7.6.4.2 Sequencer [ODS]

Code	R/W	Description	Range	Register (MB)	C/P (LIL)
L#SSNF	R/W	Sequencer Step No.*	Real	41951+20(#-1)	n/2-3
L#SAOF	R	Sequencer Analog Output	Real	41953+20(#-1)	n+1/2-3
L#SAOmF	R	Step Analog Out (most sig. word)#	Real	n/a	n+1/1
L#SAOlF	R	Step Analog Out (least sig. word)#	Real	n/a	n+2/1
L#SAEPF	R	Step Analog End Point	Real	41955+20(#-1)	n+1/4-5
L#SRTF	R/W	Step Remaining Time*	Real	41957+20(#-1)	n+3/2-3
L#SSTF	R	Sequencer Step Time	Real	41959+20(#-1)	n+3/4-5
L#SNSF	R	Sequencer Number of Steps	Real	41961+20(#-1)	n/6-7
L#SNGF	R	Sequencer Number of Groups	Real	41963+20(#-1)	n/8-9
L#SNRF	R	Sequencer Number of Recipes	Real	41965+20(#-1)	n+1/7-8
L#CRNF		Current Recipe Number @	Real	41967+20(#-1)	n+1/9-10
R/W		(spare)	0($00000000)	41969+20(#-1)	

7.6.4.3 Analog Indicator [ODA] - (V2.2)

Code	R/W	Description	Range	Register (MB)	C/P (LIL)
L#P1F	R	Process 1	Real	41951+20(#-1)	n/2-3
L#P2F	R	Process 2	Real	41953+20(#-1)	n+1/2-3
L#P3F	R	Process 3	Real	41955+20(#-1)	n+2/2-3
L#P4F	R	Process 4	Real	41957+20(#-1)	n+3/2-3
		(spare)	0($00000000)	41959/69+20(#-1)	

7.6.4.4 Discrete Indicator [ODD] & [ODP]- (V2.2)

Code	R/W	Description	Range	Register (MB)	C/P (LIL)
n/a					

* A Write command will force the Step or Remaining Time to the write value.
@ The current recipe can be changed if the Sequencer is in the HOLD mode.

7.6.5 Variable Loop Floating Point Data (32-bit IEEE)

7.6.5.1 Controller [ODC]

Code	R/W	Description	Range	Register (MB)	C/P (LIL)
L#TSPF	R/W	Target Setpoint	Real	42451+60(#-1)	n+1/13-14
L#HLF	R/W	Setpoint High Limit	Real	42453+60(#-1)	n+1/17-18
L#LLF	R/W	Setpoint Low Limit	Real	42455+60(#-1)	n+1/19-20
L#RTF	R/W	Setpoint Ramp Time (min)	Real	42457+60(#-1)	n+1/15-16
L#RRF	R/W	Setpoint Ramp Rate (units/min)	Real	42459+60(#-1)	n+1/21-22
L#A1LF	R/W	Alarm 1 Limit	Real	42461+60(#-1)	n+4/13-14
L#A2LF	R/W	Alarm 2 Limit	Real	42463+60(#-1)	n+4/15-16
L#A3LF	R/W	Alarm 3 Limit	Real	42465+60(#-1)	n+4/17-18
L#A4LF	R/W	Alarm 4 Limit	Real	42467+60(#-1)	n+4/19-20
L#T1F	R/W	Totalizer Preset 1	Real	42469+60(#-1)	n+3/15-16
L#T2F	R/W	Totalizer Preset 2	Real	42471+60(#-1)	n+3/17-18
L#Q1F	R/W	Quickset Hold 1	Real	42473+60(#-1)	n+1/41-42
L#Q2F	R/W	Quickset Hold 2	Real	42475+60(#-1)	n+2/41-42
L#BHLF	R/W	Batch Switch High Limit	Real	42477+60(#-1)	n+1/35-36
L#BLLF	R/W	Batch Switch Low Limit	Real	42479+60(#-1)	n+2/35-36
L#BPLF	R/W	Batch Switch Pre-Load	Real	42481+60(#-1)	n+3/35-36
L#BGF	R/W	Batch Switch Gain	Real	42483+60(#-1)	n+4/35-36
		(spares)	($00000000)	42485-42509+60(#-1)	

7.6.5.2 Sequencer (Timers - Running Values) [ODS]

Code	R/W	Description	Range	Register (MB)	C/P (LIL)*
L#DYT01ET	R	DYT01 Elapsed Time	Real	42451+60(#-1)	n/61-62
L#DYT01RT	R/W	DYT01 Remaining Time	Real	42453+60(#-1)	n/63-64
L#OST01ET	R	OST01 Elapsed Time	Real	42455+60(#-1)	n+1/61-62
L#OST01RT	R/W	OST01 Remaining Time	Real	42457+60(#-1)	n+1/63-64
L#RCT01ET	R	RCT01 Elapsed Time	Real	42459+60(#-1)	n+2/61-62
L#RCT01RT	R/W	RCT01 Remaining Time	Real	42461+60(#-1)	n+2/63-64
L#ROT01ET	R	ROT01 Elapsed Time	Real	42463+60(#-1)	n+3/61-62
L#ROT01RT	R/W	ROT01 Remaining Time	Real	42465+60(#-1)	n+3/63-64
L#DYT02ET	R	DYT02 Elapsed Time	Real	42467+60(#-1)	n/65-66
L#DYT02RT	R/W	DYT02 Remaining Time	Real	42469+60(#-1)	n/67-68
L#OST02ET	R	OST02 Elapsed Time	Real	42471+60(#-1)	n+1/65-66
L#OST02RT	R/W	OST02 Remaining Time	Real	42473+60(#-1)	n+1/67-68
L#RCT02ET	R	RCT02 Elapsed Time	Real	42475+60(#-1)	n+2/65-66
L#RCT02RT	R/W	RCT02 Remaining Time	Real	42477+60(#-1)	n+2/67-68
L#ROT02ET	R	ROT02 Elapsed Time	Real	42479+60(#-1)	n+3/65-66
L#ROT02RT	R/W	ROT02 Remaining Time	Real	42481+60(#-1)	n+3/67-68
L#DYT03ET	R	DYT03 Elapsed Time	Real	42483+60(#-1)	n/69-70
L#DYT03RT	R/W	DYT03 Remaining Time	Real	42485+60(#-1)	n/71-72
L#OST03ET	R	OST03 Elapsed Time	Real	42487+60(#-1)	n+1/69-70
L#OST03RT	R/W	OST03 Remaining Time	Real	42489+60(#-1)	n+1/71-72
L#RCT03ET	R	RCT03 Elapsed Time	Real	42491+60(#-1)	n+2/69-70
L#RCT03RT	R/W	RCT03 Remaining Time	Real	42493+60(#-1)	n+2/71-72
L#ROT03ET	R	ROT03 Elapsed Time	Real	42495+60(#-1)	n+3/69-70
L#ROT03RT	R/W	ROT03 Remaining Time	Real	42497+60(#-1)	n+3/71-72
		(spares)		42499-42509+60(#-1)	

* In addition to the timers listed here the LIL will map 1 through 21 (see LIL overview for exact locations).

7.6.5.3 Analog Indicator [ODA]- (V2.2)

Code	R/W	Description	Range	Register (MB)	C/P (LIL)
L#P1ALF	R/W	Process 1 Alarm A Limit	Real	42451+60(#-1)	n/13-14
L#P1BLF	R/W	Process 1 Alarm B Limit	Real	42453+60(#-1)	n/15-16
L#P2ALF	R/W	Process 2 Alarm A Limit	Real	42455+60(#-1)	n/17-18
L#P2BLF	R/W	Process 2 Alarm B Limit	Real	42457+60(#-1)	n/19-20
L#P3ALF	R/W	Process 3 Alarm A Limit	Real	42459+60(#-1)	n/21-22
L#P3BLF	R/W	Process 3 Alarm B Limit	Real	42461+60(#-1)	n/23-24
L#P4ALF	R/W	Process 4 Alarm A Limit	Real	42463+60(#-1)	n/25-26
L#P4BLF	R/W	Process 4 Alarm B Limit	Real	42465+60(#-1)	n/27-28
L#Q1F	R/W	Quickset Hold 1	Real	42467+60(#-1)	n+1/29-30
L#Q2F	R/W	Quickset Hold 2	Real	42469+60(#-1)	n+2/29-30
L#Q3F	R/W	Quickset Hold 3	Real	42471+60(#-1)	n+3/29-30
L#Q4F	R/W	Quickset Hold 4	Real	42473+60(#-1)	n+4/29-30
		(spares)	($00000000)	42475-42509+60(#-1)	

7.6.5.4 Discrete Indicator [ODD] - (V2.2)

Code	R/W	Description	Range	Register (MB)	C/P (LIL)
n/a					

7.6.5.5 Pushbutton/Switch Indicator [ODP] - (V2.2)

Code	R/W	Description	Range	Register (MB)	C/P (LIL)
n/a				See Note	

NOTE

Registers (40451-40480) are reserved for ASCII Tags when the ODP display has been selected in configuration.

7.6.6 Static Loop Floating Point Data (32-bit IEEE*)*

7.6.6.1 Controller [ODC]

Code	R/W	Description	Range	Register (MB)	C/P (LIL)
L#PGF	R/W	Proportional Gain	0.001 - 100.0	43951+60(#-1)	n/13-14
L# TIF	R/W	Integral Time	0.001 - 4000.0 min	43953+60(#-1)	n/15-16
L#TDF	R/W	Derivative Time	0.00 - 100.00 min	43955+60(#-1)	n/17-18
L#MRF	R/W	Manual Reset	0.00 - 100.00	43957+60(#-1)	n/21-22
L#ADF	R/W	Autotune Deviation	auto(0), 2.5-25%	43959+60(#-1)	n/37-38
L#AHF	R/W	Autotune Hysteresis	auto(0), 0.5 - 10.0%	43961+60(#-1)	n/39-40
L#ASF	R/W	Autotune Step (initial)	5 - 40%	43963+60(#-1)	n/41-42
L#APGF	R	Autotune Proportional Gain	0.001 - 1000.0	43965+60(#-1)	n/43-44
L#ATIF	R	Autotune Integral Time	0.001 - 4000.0 min	43967+60(#-1)	n/45-46
L#ATDF	R	Autotune Derivative Time	0.00 - 100.00 min	3969+60(#-1)	n/47-48
L#HDF	R/W	On-Off Controller HI Deviation	Real	43971+60(#-1)	n/11-12
L#LDF	R/W	On-Off Controller LO Deviation	Real	43973+60(#-1)	n+1/11-12
L#DBF	R/W	On-Off Controller DEADBAND	Real	43975+60(#-1)	n+2/11-12
L#PMNF	R/W	Process MIN SCALE	Real	43977+60(#-1)	n/27-28
L#PMXF	R/W	Process MAX SCALE	Real	43979+60(#-1)	n/29-30
L#VMNF	R/W	Valve MIN SCALE	Real	43981+60(#-1)	n+2/27-28
L#VMXF	R/W	ValveMAX SCALE	Real	43983+60(#-1)	n+2/29-30
L#XMNF	R/W	X Variable MIN SCALE	Real	43985+60(#-1)	n+3/27-28
L#XMXF	R/W	X Variable MAX SCALE	Real	43987+60(#-1)	n+3/29-30
L#YMNF	R/W	Y Variable MIN SCALE	Real	43989+60(#-1)	n+4/27-28
L#YMXF	R/W	Y Variable MAX SCALE	Real	43991+60(#-1)	n+4/29-30
L#Q1MNF	R/W	Quickset 1 MIN SCALE	Real	43993+60(#-1)	n+1/43-44
L#Q1MXF	R/W	Quickset 1 MAX SCALE	Real	43995+60(#-1)	n+1/45-46
L#Q2MNF	R/W	Quickset 2 MIN SCALE	Real	43997+60(#-1)	n+2/43-44
L#Q2MXF	R/W	Quickset 2 MAX SCALE	Real	44009+60(#-1)	n+2/45-46
L#DGF	R/W	Derivative Gain	1.00 - 30.00	44001+60(#-1)	n/19-20
		(spares)	($00000000)	44003-44009+60(#-1)	

7.6.6.2 Sequencer [ODS]

Code	R/W	Description	Range	Register (MB)	C/P (LIL)
L#S001TIM	R/W	Step 1 Time Period (min)	Real	43951+60(#-1)	1/150-151
L#S001AEP	R/W	Step 1 Analog End Point	Real	43953+60(#-1)	1/152-153
L#S002TIM	R/W	Step 2 Time Period (min)	Real	43955+60(#-1)	2/150-151
L#S002AEP	R/W	Step 2 Analog End Point	Real	43957+60(#-1)	2/152-153
L#S003TIM	R/W	Step 3 Time Period (min)	Real	43959+60(#-1)	3/150-151
L#S003AEP	R/W	Step 3 Analog End Point	Real	43961+60(#-1)	3/152-153
L#S004TIM	R/W	Step 4 Time Period (min)	Real	43963+60(#-1)	4/150-151
L#S004AEP	R/W	Step 4 Analog End Point	Real	43965+60(#-1)	4/152-153
L#S005TIM	R/W	Step 5 Time Period (min)	Real	43967+60(#-1)	5/150-151
L#S005AEP	R/W	Step 5 Analog End Point	Real	43969+60(#-1)	5/152-153
L#S006TIM	R/W	Step 6 Time Period (min)	Real	43971+60(#-1)	6/150-151
L#S006AEP	R/W	Step 6 Analog End Point	Real	43973+60(#-1)	6/152-153
L#S007TIM	R/W	Step 7 Time Period (min)	Real	43975+60(#-1)	7/150-151
L#S007AEP	R/W	Step 7 Analog End Point	Real	43977+60(#-1)	7/152-153
L#S008TIM	R/W	Step 8 Time Period (min)	Real	43979+60(#-1)	8/150-151
L#S008AEP	R/W	Step 8 Analog End Point	Real	43981+60(#-1)	8/152-153
L#S009TIM	R/W	Step 9 Time Period (min)	Real	43983+60(#-1)	9/150-151
L#S009AEP	R/W	Step 9 Analog End Point	Real	43985+60(#-1)	9/152-153
L#S010TIM	R/W	Step 10 Time Period (min)	Real	43987+60(#-1)	10/150-151
L#S010AEP	R/W	Step 10 Analog End Point	Real	43989+60(#-1)	10/152-153
		(spares)		44991-44009+60(#-1)	

7.6.6.3 Controller [ODA] - (V2.2)

Code	R/W	Description	Range	Register (MB)	C/P (LIL)
L#Q1MNF	R/W	Quickset 1 MIN SCALE	Real	43951+60(#-1)	n+1/31-32
L#Q1MXF	R/W	Quickset 1 MAX SCALE	Real	43953+60(#-1)	n+1/33-34
L#Q2MNF	R/W	Quickset 2 MIN SCALE	Real	43955+60(#-1)	n+2/31-32
L#Q2MXF	R/W	Quickset 2 MAX SCALE	Real	43957+60(#-1)	n+2/33-34
L#Q3MNF	R/W	Quickset 3 MIN SCALE	Real	43959+60(#-1)	n+3/31-32
L#Q3MXF	R/W	Quickset 3 MAX SCALE	Real	43961+60(#-1)	n+3/33-34
L#Q4MNF	R/W	Quickset 4 MIN SCALE	Real	43963+60(#-1)	n+4/31-32
L#Q4MXF	R/W	Quickset 4 MAX SCALE	Real	43965+60(#-1)	n+4/33-34
L#P1MNF	R	Process 1 MIN SCALE	Real	43967+60(#-1)	n+4/13-14
L#P1MXF	R	Process 1 MAX SCALE	Real	43969+60(#-1)	n+5/13-14
L#P2MNF	R	Process 2 MIN SCALE	Real	43971+60(#-1)	n+4/15-16
L#P2MXF	R	Process 2 MAX SCALE	Real	43973+60(#-1)	n+5/15-16
L#P3MNF	R	Process 3 MIN SCALE	Real	43975+60(#-1)	n+4/17-18
L#P3MXF	R	Process 3 MAX SCALE	Real	43977+60(#-1)	n+5/17-18
L#P4MNF	R	Process 4 MIN SCALE	Real	43979+60(#-1)	n+4/19-20
L#P4MXF	R	Process 4 MAX SCALE	Real	43981+60(#-1)	n+5/19-20
	(spares)		($00000000)	43967-44009+60(#-1)	

7.6.6.4 Discrete Indicator [ODD] - (V2.2)

Code	R/W	Description	Range	Register (MB)	C/P (LIL)
n/a					

7.6.6.5 Pushbutton/Switch Indicator [ODP] - (V2.2)

Code	R/W	Description	Range	Register (MB)	C/P (LIL)
n/a					

7.6.7 String Loop Data (8-bit ASCII Char - 2/Word*)*

7.6.7.1 Controller [ODC]

Code	R/W	Description	Range	Register (MB)	C/P (LIL)
L#TAG	R	Loop Tag	12 ASCII Char	45451+100(#-1)	n+3/2-7
L#PUR	R/W	Process Units - Reduced	4 ASCII Char	45457+100(#-1)	n+3/8-9
L#PU	R/W	Process Units	6 ASCII Char	45459+100(#-1)	n/31-33
L#VU	R/W	Valve Units	6 ASCII Char	45462+100(#-1)	n+2/31-33
L#XU	R/W	X Variable Units	6 ASCII Char	45465+100(#-1)	n+3/31-33
L#YU	R/W	Y Variable Units	6 ASCII Char	45468+100(#-1)	n+4/31-33
L#TLU	R/W	Totalizer Units	6 ASCII Char	45471+100(#-1)	n+3/19-21
L#Q1N	R	Quickset Hold 1 Name	8 ASCII Char	45474+100(#-1)	n+1/37-40
L#Q1U	R/W	Quickset Hold 1 Units	6 ASCII Char	45478+100(#-1)	n+3/37-39
L#Q2N	R	Quickset Hold 2 Name	8 ASCII Char	45481+100(#-1)	n+2/37-40
L#Q2U	R/W	Quickset Hold 2 Units	6 ASCII Char	45485+100(#-1)	n+3/40-42
L#LHM	R/W	Left Horizontal Bar Message	5 ASCII Char	45488+100(#-1)	n+2/13-15
L#RHM	R/W	Right Horizontal Bar Message	5 ASCII Char	45491+100(#-1)	n+2/16-18
		(spares)	($0000)	45492-45550+100(#-1)	

7.6.7.2 Sequencer [ODS]

Code	R/W	Description	Range	Register (MB)	C/P (LIL)
L#TAG	R	Loop Tag *(V2.2)*	12 ASCII Char	45451+100(#-1)	n/37-42
L#PMSG	R	Primary Message *(V1.3)*	8 ASCII Char	45457+100(#-1)	n+1/37-41
L#SMSG	R	Secondary Message *(V1.3)*	12 ASCII Char	45461+100(#-1)	n+2/37-42
L#CMSGa	R	Conditional Message a **(V1.3)*	16 ASCII Char	45467+100(#-1)	n+3/37-44
L#CMSGb	R	Conditional Message b * *(V1.3)*	16 ASCII Char	45475+100(#-1)	n+4/37-44
L#CMSGc	R	Conditional Message c * *(V1.3)*	16 ASCII Char	45483+100(#-1)	n+5/37-44
L#CMSGd	R	Conditional Message d * *(V1.3)*	16 ASCII Char	45491+100(#-1)	n/49-56
L#CMSGe	R	Conditional Message e * *(V1.3)*	16 ASCII Char	45499+100(#-1)	n+1/49-56
L#CMSGf	R	Conditional Message f * *(V1.3)*	16 ASCII Char	45507+100(#-1)	n+2/49-56
L#CMSGg	R	Conditional Message g * *(V1.3)*	16 ASCII Char	45515+100(#-1)	n+3/49-56
L#CMSGh	R	Conditional Message h * *(V1.3)*	16 ASCII Char	45523+100(#-1)	n+4/49-56
L#CMSGi	R	Conditional Message i * *(V1.3)*	16 ASCII Char	45531+100(#-1)	n+5/49-56
L#RMSG	R	Recipe Message *(V2.2)***	12 ASCII Char	45539+100(#-1)	n/25-30
		(spares)	($0000)	45545-45550+100(#-1)	

* Conditional messages are stacked in the order of occurrence. The 9 most recent active conditional messages can be viewed over LIL or Modbus.

** Version 1.3 included the Recipe Message at 45451. Version 2.2 moved the Recipe Message to a new location and placed the Loop Tag in place of the Recipe Message.

7.6.7.3 Analog Indicator [ODA] - (V2.2)

Code	R/W	Description	Range	Register (MB)	C/P (LIL)
L#TAG	R	Loop Tag	12 ASCII Char	45451+100(#-1)	n+4/2-7
L#P1T	R	Process 1 Tag	6 ASCII Char	45457+100(#-1)	n/4-6
L#P1U	R/W	Process 1 Units	6 ASCII Char	45460+100(#-1)	n/7-9
L#P2T	R	Process 2 Tag	6 ASCII Char	45463+100(#-1)	n+1/4-6
L#P2U	R/W	Process 2 Units	6 ASCII Char	45466+100(#-1)	n+1/7-9
L#P3T	R	Process 3 Tag	6 ASCII Char	45469+100(#-1)	n+2/4-6
L#P3U	R/W	Process 3 Units	6 ASCII Char	45472+100(#-1)	n+2/7-9
L#P4T	R	Process 4 Tag	6 ASCII Char	45475+100(#-1)	n+3/4-6
L#P4U	R/W	Process 4 Units	6 ASCII Char	45478+100(#-1)	n+3/7-9
L#Q1N	R	Quickset Hold 1 Name	8 ASCII Char	45481+100(#-1)	n+1/25-28
L#Q1U	R/W	Quickset Hold 1 Units	6 ASCII Char	45485+100(#-1)	n+1/22-24

L#Q2N	R	Quickset Hold 2 Name	8 ASCII Char	45488+100(#-1)	n+2/25-28
L#Q2U	R/W	Quickset Hold 2 Units	6 ASCII Char	45492+100(#-1)	n+2/22-24
L#Q3N	R	Quickset Hold 3 Name	8 ASCII Char	45495+100(#-1)	n+3/25-28
L#Q3U	R/W	Quickset Hold 3 Units	6 ASCII Char	45499+100(#-1)	n+3/22-24
L#Q4N	R	Quickset Hold 4 Name	8 ASCII Char	45502+100(#-1)	n+4/25-28
L#Q4U	R/W	Quickset Hold 4 Units	6 ASCII Char	45506+100(#-1)	n+4/22-24
		(spares)	($0000)	45509-45550+100(#-1)	

7.6.7.4 Discrete Indicator [ODD] - (V2.2)

Code	R/W	Description	Range	Register (MB)	C/P (LIL)
L#TAG	R	Loop Tag	12 ASCII Char	45451+100(#-1)	n+3/2-7
L#I0T	R	Input 0 Tag	6 ASCII Char	45457+100(#-1)	n/2-4
L#I1T	R	Input 1 Tag	6 ASCII Char	45460+100(#-1)	n+1/2-4
L#I2T	R	Input 2 Tag	6 ASCII Char	45463+100(#-1)	n+2/2-4
L#I3T	R	Input 3 Tag	6 ASCII Char	45466+100(#-1)	n/5-7
L#I4T	R	Input 4Tag	6 ASCII Char	45469+100(#-1)	n+1/5-7
L#I5T	R	Input 5 Tag	6 ASCII Char	45472+100(#-1)	n+2/5-7
L#I6T	R	Input 6 Tag	6 ASCII Char	45475+100(#-1)	n/8-10
L#I7T	R	Input 7 Tag	6 ASCII Char	45478+100(#-1)	n+1/8-10
L#I8T	R	Input 8 Tag	6 ASCII Char	45481+100(#-1)	n+2/8-10
L#I9T	R	Input 9 Tag	6 ASCII Char	45484+100(#-1)	n/11-13
L#IAT	R	Input A Tag	6 ASCII Char	45487+100(#-1)	n+1/11-13
L#IBT	R	Input B Tag	6 ASCII Char	45490+100(#-1)	n+2/11-13
L#ICT	R	Input C Tag	6 ASCII Char	45493+100(#-1)	n/14-16
L#IDT	R	Input D Tag	6 ASCII Char	45496+100(#-1)	n+1/14-16
L#IET	R	Input E Tag	6 ASCII Char	45499+100(#-1)	n+2/14-16
L#IFT	R	Input F Tag	6 ASCII Char	45502+100(#-1)	n+3/14-16
		(spares)	($0000)	45505-45550+100(#-1)	

7.6.7.5 Discrete Indicator [ODP] - (V2.2)

Code	R/W	Description	Range	Register (MB)	C/P (LIL)
L#TAG	R	Loop Tag	12 ASCII Char	45451+100(#-1)	n/2-7
L#G1Tag	R	Group 1 Tag	6 ASCII Char	45457+100(#-1)	n/13-15
L#G1P1T	R	Group 1 PB1 Tag	6 ASCII Char	45460+100(#-1)	n/16-18
L#G1P2T	R	Group 1 PB2 Tag	6 ASCII Char	45463+100(#-1)	n/19-21
L#G1SAT	R	Group 1 Switch Position A Tag	6 ASCII Char	45466+100(#-1)	n/22-24
L#G1SMT	R	Group 1 Switch Position M Tag	6 ASCII Char	45469+100(#-1)	n+1/22-24
L#G1F1T	R	Group 1 Feedback 1 Tag	6 ASCII Char	45472+100(#-1)	n+1/13-15
L#G1F0T	R	Group 1 Feedback 0 Tag	6 ASCII Char	45475+100(#-1)	n+1/16-18
L#G2Tag	R	Group 2 Tag	6 ASCII Char	45478+100(#-1)	n/25-27
L#G2P1T	R	Group 2 PB1 Tag	6 ASCII Char	45481+100(#-1)	n/28-30
L#G2P2T	R	Group 2 PB2 Tag	6 ASCII Char	45484+100(#-1)	n/31-33
L#G2SAT	R	Group 2 Switch Position A Tag	6 ASCII Char	45487+100(#-1)	n/34-36
L#G2SMT	R	Group 2 Switch Position M Tag	6 ASCII Char	45490+100(#-1)	n+1/34-36
L#G2F1T	R	Group 2 Feedback 1 Tag	6 ASCII Char	45493+100(#-1)	n+1/25-27
L#G2F0T	R	Group 2 Feedback 0 Tag	6 ASCII Char	45496+100(#-1)	n+1/28-30
L#G3Tag	R	Group 3 Tag	6 ASCII Char	45499+100(#-1)	n/37-39
L#G3P1T	R	Group 3 PB1 Tag	6 ASCII Char	45502+100(#-1)	n/40-42
L#G3P2T	R	Group 3 PB2 Tag	6 ASCII Char	45505+100(#-1)	n/43-45
L#G3SAT	R	Group 3 Switch Position A Tag	6 ASCII Char	45508+100(#-1)	n/46-48
L#G3SMT	R	Group 3 Switch Position M Tag	6 ASCII Char	45511+100(#-1)	n+1/46-48
L#G3F1T	R	Group 3 Feedback 1 Tag	6 ASCII Char	45514+100(#-1)	n+1/37-39
L#G3F0T	R	Group 3 Feedback 0 Tag	6 ASCII Char	45517+100(#-1)	n+1/40-42
L#G4Tag	R	Group 4 Tag	6 ASCII Char	45520+100(#-1)	n/49-51
L#G4P1T	R	Group 4 PB1 Tag	6 ASCII Char	45523+100(#-1)	n/52-54
L#G4P2T	R	Group 4 PB2 Tag	6 ASCII Char	45526+100(#-1)	n/55-57
L#G4SAT	R	Group 4 Switch Position A Tag	6 ASCII Char	45529+100(#-1)	n/58-60
L#G4SMT	R	Group 4 Switch Position M Tag	6 ASCII Char	45532+100(#-1)	n+1/58-60
L#G4F1T	R	Group 4 Feedback 1 Tag	6 ASCII Char	45535+100(#-1)	n+1/49-51
L#G4F0T	R	Group 4 Feedback 0 Tag	6 ASCII Char	45538+100(#-1)	n+1/52-54
L#G5Tag	R	Group 5 Tag	6 ASCII Char	40451+30(#-1)	n/61-63
L#G5P1T	R	Group 5 PB1 Tag	6 ASCII Char	40454+30(#-1)	n/64-66

L#G5P2T	R	Group 5 PB2 Tag	6 ASCII Char	40457+30(#-1)	n/67-69
L#G5SAT	R	Group 5 Switch Position A Tag	6 ASCII Char	40460+30(#-1)	n/70-72
L#G5SMT	R	Group 5 Switch Position M Tag	6 ASCII Char	40463+30(#-1)	n+1/70-72
L#G5F1T	R	Group 5 Feedback 1 Tag	6 ASCII Char	40466+30(#-1)	n+1/61-63
L#G5F0T	R	Group 5 Feedback 0 Tag	6 ASCII Char	40469+30(#-1)	n+1/64-66
	Spares	40472-40480			

Note: These Modbus groupings normally used for Variable Loop Integer Data with displays other than ODP

L#G6Tag	R	Group 6 Tag	6 ASCII Char	41201+30(#-1)	n/73-75
L#G6P1T	R	Group 6 PB1 Tag	6 ASCII Char	41204+30(#-1)	n/76-78
L#G6P2T	R	Group 6 PB2 Tag	6 ASCII Char	41207+30(#-1)	n/79-81
L#G6SAT	R	Group 6 Switch Position A Tag	6 ASCII Char	41210+30(#-1)	n/82-84
L#G6SMT	R	Group 6 Switch Position M Tag	6 ASCII Char	41213+30(#-1)	n+1/82-84
L#G6F1T	R	Group 6 Feedback 1 Tag	6 ASCII Char	41216+30(#-1)	n+1/73-75
L#G6F0T	R	Group 6 Feedback 0 Tag	6 ASCII Char	41219+30(#-1)	n+1/76-78
		spares		41222-41230	

Note: These Modbus groupings normally used for Static Loop Integer Data with displays other than ODP

L#G7Tag	R	Group 7 Tag	6 ASCII Char	42451+60(#-1)	n/85-87
L#G7P1T	R	Group 7 PB1 Tag	6 ASCII Char	42454+60(#-1)	n/88-90
L#G7P2T	R	Group 7 PB2 Tag	6 ASCII Char	42457+60(#-1)	n/91-93
L#G7SAT	R	Group 7 Switch Position A Tag	6 ASCII Char	42460+60(#-1)	n/94-96
L#G7SMT	R	Group 7 Switch Position M Tag	6 ASCII Char	42463+60(#-1)	n+1/94-96
L#G7F1T	R	Group 7 Feedback 1 Tag	6 ASCII Char	42466+60(#-1)	n+1/85-87
L#G7F0T	R	Group 7 Feedback 0 Tag	6 ASCII Char	42469+60(#-1)	n+1/88-90
L#G8Tag	R	Group 8 Tag	6 ASCII Char	42472+60(#-1)	n/97-99
L#G8P1T	R	Group 8 PB1 Tag	6 ASCII Char	42475+60(#-1)	n/100-102
L#G8P2T	R	Group 8 PB2 Tag	6 ASCII Char	42478+60(#-1)	n/103-105
L#G8SAT	R	Group 8 Switch Position A Tag	6 ASCII Char	42481+60(#-1)	n/106-108
L#G8SMT	R	Group 8 Switch Position M Tag	6 ASCII Char	42484+60(#-1)	n+1/106-108
L#G8F1T	R	Group 8 Feedback 1 Tag	6 ASCII Char	42487+60(#-1)	n+1/97-99
L#G8F0T	R	Group 8 Feedback 0 Tag	6 ASCII Char	42490+60(#-1)	n+1/100-102
		spares		42493-42509	

Note: These Modbus groupings normally used for Variable Loop Floating Point Data with displays other than ODP

7.6.8 Coil Loop Data (1-bit)

7.6.8.1 Controller [ODC]

Code	R/W	Description	Range	Coil(MB)	C/P (LIL)
L#A	R/W	1-Auto 0-Manual	1/0	00296+48(#-1)	n+3/1(0)
L#L	R/W	1-Local	1/0	00297+48(#-1)	n+3/1(1)
L#SS	R	1-AM block in STANDBY	1/0	00298+48(#-1)	n+3/1(2)
L#E	R/W	1-External Set	1/0	00299+48(#-1)	n+3/1(3)
L#CN	R/W	1-Console	1/0	00300+48(#-1)	n+3/1(4)
L#CM	R/W	1-Computer	1/0	00301+48(#-1)	n+3/1(5)
L#RS	R/W	1-Ramping Setpoint	1.0	00302+48(#-1)	n+3/1(6)
L#OR	R	1-Override	1/0	00303+48(#-1)	n+3/1(7)
L#EM	R	1-Emergency Manual	1/0	00304+48(#-1)	n+3/1(8)
L#CH	R	1-Configuration Hold	1/0	00305+48(#-1)	n+3/1(9)
L#HL	R	1-HI Setpoint Limit	1/0	00306+48(#-1)	n+3/1(10)
L#LL	R	1-LO Setpoint Limit	1/0	00307+48(#-1)	n+3/1(11)
L#OS	R/W	1-Alarms - Out of Service	1/0	00308+48(#-1)	n+3/1(12)
L#U1S	R	1-U1 Status Active	1/0	00309+48(#-1)	n+3/1(13)
L#U2S	R	1-U2 Status Active	1/0	00310+48(#-1)	n+3/1(14)
L#AT	R/W	1-Autotune	1/0	00311+48(#-1)	n+3/1(15)
L#A1	R	1-Alarm 1 is Active	1/0	00312+48(#-1)	n+4/1(0)
L#N1	R/W	1-Alarm 1 is Not Acknowledged	1/0	00313+48(#-1)	n+4/1(1)
L#E1	R/W	1-Alarm 1 is Enabled	1/0	00314+48(#-1)	n+4/1(2)
L#A2	R	1-Alarm 2 is Active	1/0	00315+48(#-1)	n+4/1(3)
L#N2	R/W	1-Alarm 2 is Not Acknowledged	1/0	00316+48(#-1)	n+4/1(4)
L#E2	R/W	1-Alarm 2 is Enabled	1/0	00317+48(#-1)	n+4/1(5)
L#A3	R	1-Alarm 3 is Active	1/0	0318+48(#-1)	n+4/1(6)
L#N3	R/W	1-Alarm 3 is Not Acknowledged	1/0	00319+48(#-1)	n+4/1(7)
L#E3	R/W	1-Alarm 3 is Enabled	1/0	00320+48(#-1)	n+4/1(8)
L#A4	R	1-Alarm 4 is Active	1/0	00321+48(#-1)	n+4/1(9)
L#N4	R/W	1-Alarm 4 is Not Acknowledged	1/0	00322+48(#-1)	n+4/1(10)
L#E4	R/W	1-Alarm 4 is Enabled	1/0	00323+48(#-1)	n+4/1(11)
L#OS2	R/W	1-Alarms - Out of Service	1/0	00324+48(#-1)	n+4/1(12)
L#CC	R	1-Configuration has Changed	1/0	00325+48(#-1)	n+4/1(13)
L#NA	R/W	1-Unacknowledged Loop Event	1/0	00326+48(#-1)	n+4/1(14)
L#AE	R	1-Active Loop Event	1/0	00327+48(#-1)	n+4/1(15)
L#NSS	R/W	1-Not Ack'd STANDBY *(V1.3)*	1/0	00328+48(#-1)	n+4/10(0)
L#NOR	R/W	1-Not Ack'd Override *(V1.3)*	1/0	00329+48(#-1)	n+4/10(1)
L#NEM	R/W	1-Not Ack'd Emergency Man *(V1.3)*	1/0	00330+48(#-1)	n+4/10(2)
L#NHL	R/W	1-Not Ack'd HI Setpoint Limit *(V1.3)*	1/0	00331+48(#-1)	n+4/10(3)
L#NLL	R/W	1-Not Ack'd LO Setpoint Limit *(V1.3)*	1/0	00332+48(#-1)	n+4/10(4)
L#NU1	R/W	1-Not Ack'd U1 Status *(V1.3)*	1/0	00333+48(#-1)	n+4/10(5)
L#NU2	R/W	1-Not Ack'd U2 Status *(V1.3)*	1/0	00334+48(#-1)	n+4/10(6)
L#NW1	R/W	1-Not Ack'd W1 Status *(V1.3)*	1/0	00335+48(#-1)	n+4/10(7)
L#NW2	R/W	1-Not Ack'd W2 Status *(V1.3)*	1/0	00336+48(#-1)	n+4/10(8)
L#NW3	R/W	1-Not Ack'd W3 Status *(V1.3)*	1/0	00337+48(#-1)	n+4/10(9)
L#NE1	R/W	1-Not Ack'd E1 Status *(V1.3)*	1/0	00338+48(#-1)	n+4/10(10)
L#NE2	R/W	1-Not Ack'd E2 Status *(V1.3)*	1/0	00339+48(#-1)	n+4/10(11)
L#NE3	R/W	1-Not Ack'd E3 Status *(V1.3)*	1/0	00340+48(#-1)	n+4/10(12)
L#XAT	W	1-Transfer Autotune Parameters *(V1.3)*	1/0	00341+48(#-1)	n+4/10(13)
L#PB1C	R/W	PB1SW Input MD (*) *(V1.3)*	1/0	00342+48(#-1)	n+4/10(14)
L#PB2C	R/W	PB2SW Input MD (*) *(V1.3)*	1/0	00343+48(#-1)	n+4/10(15)

* These bits indicate the status of the switch input MD. A write of a "1" will have the same effect as pressing and releasing the button on the faceplate. If the action of the switch is sustained the switch will change position. If the action is momentary, the switch will close for one scan cycle.

Control Loop Status Word (L#***CLS) - channel n+3/parameter 1***

BIT	Description	Value	Block	Read/Write	Output
0	Auto/Manual (A)	1-Auto 0-Manual	A/M	R/W	
1	Local Loop (L)	1-Local	ODC	R/W	L
2	Standby Sync (SS)	1-Standby	A/M	R	
3	External/Internal (E)	1-External 0-Internal	E/I	R/W	ES
4	Console (CN)	1-Console	ODC	R/W	CN
5	Computer (CM)	1-Computer	ODC	R/W	CM
6	Ramping Setpoint (RS)	1-Ramping Setpoint	SETPT	R/W	RS
7	Override (OR)	1-Override	ORSL	R	OS
8	Emergency Manual (EM)	1-Emergency Manual	A/M	R	
9	Configuration Hold (CH)	1-Configuration Hold		R	
10	HI Setpoint Limit (HL)	1-HI Setpoint Limit	SPLIM	R	HS
11	LO Setpoint Limit (LL)	1-LO Setpoint Limit	SPLIM	R	LS
12	Alarms are Out of Service (OS)	1-Out of Service	ALARM	R/W	
13	U1 Status Active (U1S)	1- U1 Active	ODC	R	
14	U2 Status Active (U2S)	1- U2 Active	ODC	R	
15	Autotune is active (AT)	1-Autotune		R/W	

Control Loop Alarm Status Word (L#***ASW) - channel n+4/parameter 1***

BIT	Description	Value	Block	Read/Write	Output
0	Alarm 1 is Active (A1)	1-Active	ALARM	R	
1	Alarm 1 is Not Acknowledged (N1)	1-Not Acknowledged	ALARM	R/W	
2	Alarm 1 is Enabled (E1)	1-Enabled	ALARM	R/W	
3	Alarm 2 is Active (A2)	1-Active	ALARM	R	
4	Alarm 2 is Not Acknowledged (N2)	1-Not Acknowledged	ALARM	R/W	
5	Alarm 2 is Enabled (E2)	1-Enabled	ALARM	R/W	
6	Alarm 3 is Active (A3)	1-Active	ALARM	R	
7	Alarm 3 is Not Acknowledged (N3)	1-Not Acknowledged	ALARM	R/W	
8	Alarm 3 is Enabled (E3)	1-Enabled	ALARM	R/W	
9	Alarm 4 is Active (A4)	1-Active	ALARM	R	
10	Alarm 4 is Not Acknowledged (N4)	1-Not Acknowledged	ALARM	R/W	
11	Alarm 4 is Enabled (E4)	1-Enabled	ALARM	R/W	
12	Alarms are Out of Service (OS)	1-Out of Service	ALARM	R/W	
13	Configuration has Changed (CC)	1-Loop Configured		R	
14	Unacknowledged Loop Event (NA)	1-Unacknowledged Event		R/W	
15	Active Loop Event (AE)	1- Active Loop Event		R	

Extended Control Loop Status Word (L#ECLS) - channel n+4/parameter 10

BIT	Description	Value	Block	Read/Write	Output
0	Not Ack'd STANDBY	1-Not Acknowledged	A/M	R/W	
1	Not Ack'd Override	1-Not Acknowledged	A/M	R/W	
2	Not Ack'd Emergency Manual	1-Not Acknowledged	A/M	R/W	
3	Not Ack'd HI Setpoint Limit	1-Not Acknowledged	SPLIM	R/W	
4	Not Ack'd LO Setpoint Limit	1-Not Acknowledged	SPLIM	R/W	
5	Not Ack'd User 1 Status	1-Not Acknowledged	ODC	R/W	
6	Not Ack'd User 2 Status	1-Not Acknowledged	ODC	R/W	
7	Not Ack'd Autotune W1 Warning	1-Not Acknowledged	PID	R/W	
8	Not Ack'd Autotune W2 Warning	1-Not Acknowledged	PID	R/W	
9	Not Ack'd Autotune W3 Warning	1-Not Acknowledged	PID	R/W	
10	Not Ack'd Autotune E1 Warning	1-Not Acknowledged	PID	R/W	
11	Not Ack'd Autotune E2 Warning	1-Not Acknowledged	PID	R/W	
12	Not Ack'd Autotune E3 Warning	1-Not Acknowledged	PID	R/W	
13	Transfer Autotune Parameters	1-Transfer	PID	W	
14	PB1SW Input MD (*)	1-High, 0-Low	PB1SW	R/W	
15	PB2SW Input MD (*)	1-High, 0-Low	PB2SW	R/W	

* These bits indicate the status of the switch input MD. A write of a "1" will have the same effect as pressing and releasing the button on the faceplate. If the action of the switch is sustained, the switch will change position. If the action is momentary, the switch will close for one scan cycle.

7.6.8.2 Sequencer Loop [ODS]

Code	R/W	Description	Range	Coil (MB)	C/P (LIL)
L#HS	R	1-Hold Sequencer	1/0	00296+48(#-1)	n+4/1(0)
L#L	R/W	1-Loop Local	1/0	00297+48(#-1)	n+4/1(1)
L#RSQ	W	1-Reset Sequencer	1/0	00298+48(#-1)	n+4/1(2)
L#TC	R	1-Track	1/0	00299+48(#-1)	n+4/1(3)
L#CN	R/W	1-Console	1/0	00300+48(#-1)	n+4/1(4)
L#CM	R/W	1-Computer	1/0	00301+48(#-1)	n+4/1(5)
L#SSF	W	1-Step Forward (normal 0)	1/0	00302+48(#-1)	n+4/1(6)
L#SSB	W	1-Step Backward (normal 0)	1/0	00303+48(#-1)	n+4/1(7)
		(spare)	1/0	00304+48(#-1)	n+4/1(8)
L#CH	R	1-Configuration Hold	1/0	00305+48(#-1)	n+4/1(9)
L#SSC	R	1-Steps Completed	1/0	00306+48(#-1)	n+4/1(10)
		(spare)	0	00307+48(#-1)	n+4/1(11)
		(spare)	0	00308+48(#-1)	n+4/1(12)
L#PB1	R	PB1SW Input MD (*) *(V1.3)*	1/0	00309+48(#-1)	n+4/1(13)
L#PB2	R	PB2SW Input MD (*) *(V1.3)*	1/0	00310+48(#-1)	n+4/1(14)
L#PB3	R	PB3SW Input MD (*) *(V1.3)*	1/0	00311+48(#-1)	n+4/1(15)
L#A1	R	1-Alarm 1 is Active	1/0	00312+48(#-1)	n+5/1(0)
L#N1	R/W	1-Alarm 1 is Not Acknowledged	1/0	00313+48(#-1)	n+5/1(1)
L#E1	R/W	1-Alarm 1 is Enabled	1/0	00314+48(#-1)	n+5/1(2)
L#A2	R	1-Alarm 2 is Active	1/0	00315+48(#-1)	n+5/1(3)
L#N2	R/W	1-Alarm 2 is Not Acknowledged	1/0	00316+48(#-1)	n+5/1(4)
L#E2	R/W	1-Alarm 2 is Enabled	1/0	00317+48(#-1)	n+5/1(5)
L#A3	R	1-Alarm 3 is Active	1/0	00318+48(#-1)	n+5/1(6)
L#N3	R/W	1-Alarm 3 is Not Acknowledged	1/0	00319+48(#-1)	n+5/1(7)
L#E3	R/W	1-Alarm 3 is Enabled	1/0	00320+48(#-1)	n+5/1(8)
L#A4	R	1-Alarm 4 is Active	1/0	00321+48(#-1)	n+5/1(9)
L#N4	R/W	1-Alarm 4 is Not Acknowledged	1/0	00322+48(#-1)	n+5/1(10)
L#E4	R/W	1-Alarm 4 is Enabled	1/0	00323+48(#-1)	n+5/1(11)
L#OS2	R/W	1-Alarms - Out of Service	1/0	00324+48(#-1)	n+5/1(12)
L#CC	R	1-Configuration has Changed	1/0	00325+48(#-1)	n+5/1(13)
L#NA	R/W	1-Unacknowledged Loop Event	1/0	00326+48(#-1)	n+5/1(14)
L#AE	R	1-Active Loop Event	1/0	00327+48(#-1)	n+5/1(15)
		(spare)	0	00328+48(#-1)	

* These bits indicate the status of the switch input MD. A write of a “1” will have the same effect as pressing and releasing the button on the faceplate. If the action of the switch is sustained, the switch will change position. If the action is momentary, the switch will close for one scan cycle.

Sequencer Loop Status Word (*L#*SLS) - channel n+4/parameter 1

BIT	Description	Value	Block	Read/Write	Output
0	Hold Sequencer (HS)	1-Hold	PRSEQ	R	
1	Local (L)	1-Local	ODS	R/W	L
2	Reset Sequencer (RSQ)	1-Reset	PRSEQ	W	
3	Track Command (TC)	1-Track	PRSEQ	R	
4	Console (CN)	1-Console	ODS	R/W	CN
5	Computer CM)	1-Computer	ODS	R/W	CM
6	Step Forward (SSF)	1-Step	PRSEQ	W	
7	Step Backward (SSB)	1-Step	PRSEQ	W	
8					
9	Configuration Hold (CH)	1-Configuration Hold		R	
10	Steps Completed (SSC)	1- Steps Complete	PRSEQ	R	
11					
12					
13	PB1SW Input MD (PB1)	1/0 (write of 1 presses PB)	PB1SW	R/W	
14	PB2SW Input MD (PB2)	1/0 (write of 1 presses PB)	PB2SW	R/W	
15	PB3SW Input MD (PB3)	1/0 (write of 1 presses PB)	PB2SW	R/W	

Sequencer Loop Alarm Status Word (*L#*ASW) - channel n+5/parameter 1

BIT	Description	Value	Block	Read/Write	Output
0	Alarm 1 is Active (A1)	1-Active	ALARM	R	
1	Alarm 1 is Not Acknowledged (N1)	1-Not Acknowledged	ALARM	R/W	
2	Alarm 1 is Enabled (E1)	1-Enabled	ALARM	R/W	
3	Alarm 2 is Active (A2)	1-Active	ALARM	R	
4	Alarm 2 is Not Acknowledged (N2)	1-Not Acknowledged	ALARM	R/W	
5	Alarm 2 is Enabled (E2)	1-Enabled	ALARM	R/W	
6	Alarm 3 is Active (A3)	1-Active	ALARM	R	
7	Alarm 3 is Not Acknowledged (N3)	1-Not Acknowledged	ALARM	R/W	
8	Alarm 3 is Enabled (E3)	1-Enabled	ALARM	R/W	
9	Alarm 4 is Active (A4)	1-Active	ALARM	R	
10	Alarm 4 is Not Acknowledged (N4)	1-Not Acknowledged	ALARM	R/W	
11	Alarm 4 is Enabled (E4)	1-Enabled	ALARM	R/W	
12	Alarms are Out of Service (OS)	1-Out of Service	ALARM	R/W	
13	Configuration has Changed (CC)	1-Loop Configured		R	
14	Unacknowledged Loop Event (NA)	1-Unacknowledged Event		R/W	
15	Active Loop Event (AE)	1- Active Loop Event		R	

7.6.8.3 Analog Indicator [ODA] - (V2.2)

Code	R/W	Description	Range	Coil(MB)	C/P (LIL)
L#P1AA	R	1-Process 1 Alarm A is Active	1/0	00296+48(#-1)	n+4/1(0)
L#P1AN	R/W	1-Process 1 Alarm A is Not Acknowledged	1/0	00297+48(#-1)	n+4/1(1)
L#P1AE	R/W	1-Process 1 Alarm A is Enabled	1/0	00298+48(#-1)	n+41(2)
L#P1BA	R	1-Process 1 Alarm B is Active	1/0	00299+48(#-1)	n+4/1(3)
L#P1BN	R/W	1-Process 1 Alarm B is Not Acknowledged	1/0	00300+48(#-1)	n+4/1(4)
L#P1BE	R/W	1-Process 1 Alarm B is Enabled	1/0	00301+48(#-1)	n+4/1(5)
L#P2AA	R	1-Process 2 Alarm A is Active	1/0	00302+48(#-1)	n+4/1(6)
L#P2AN	R/W	1-Process 2 Alarm A is Not Acknowledged	1/0	00303+48(#-1)	n+4/1(7)
L#P2AE	R/W	1-Process 2 Alarm A is Enabled	1/0	00304+48(#-1)	n+4/1(8)
L#P2BA	R	1-Process 2 Alarm B is Active	1/0	00305+48(#-1)	n+4/1(9)
L#P2BN	R/W	1-Process 2 Alarm B is Not Acknowledged	1/0	00306+48(#-1)	n+4/1(10)
L#P2BE	R/W	1-Process 2 Alarm B is Enabled	1/0	00307+48(#-1)	n+4/1(11)
L#OS1	R/W	1-Alarms - Out of Service	1/0	00308+48(#-1)	n+4/1(12)
L#PB1	R/W	PB1SW Input MD (*) *(V1.3)*	1/0	00309+48(#-1)	n+4/1(13)
L#PB2	R/W	PB2SW Input MD (*) *(V1.3)*	1/0	00310+48(#-1)	n+4/(14)
L#PB3	R/W	PB3SW Input MD (*) *(V1.3)*	1/0	00311+48(#-1)	n+4/1(15)
L#P3AA	R	1-Process 3 Alarm A is Active	1/0	00312+48(#-1)	n+5/1(0)
L#P3AN	R/W	1-Process 3 Alarm A is Not Acknowledged	1/0	00313+48(#-1)	n+5/1(1)
L#P3AE	R/W	1-Process 3 Alarm A is Enabled	1/0	00314+48(#-1)	n+5/1(2)
L#P3BA	R	1-Process 3 Alarm B is Active	1/0	00315+48(#-1)	n+5/1(3)
L#P3BN	R/W	1-Process 3 Alarm B is Not Acknowledged	1/0	00316+48(#-1)	n+5/1(4)
L#P3BE	R/W	1-Process 3 Alarm B is Enabled	1/0	00317+48(#-1)	n+5/1(5)
L#P4AA	R	1-Process 4 Alarm A is Active	1/0	00318+48(#-1)	n+1/1(6)
L#P4AN	R/W	1-Process 4 Alarm A is Not Acknowledged	1/0	00319+48(#-1)	n+5/1(7)
L#P4AE	R/W	1-Process 4 Alarm A is Enabled	1/0	00320+48(#-1)	n+5/1(8)
L#P4BA	R	1-Process 4 Alarm B is Active	1/0	00321+48(#-1)	n+5/1(9)
L#P4BN	R/W	1-Process 4 Alarm B is Not Acknowledged	1/0	00322+48(#-1)	n+5/1(10)
L#P4BE	R/W	1-Process 4 Alarm B is Enabled	1/0	00323+48(#-1)	n+5/1(11)
L#OS	R/W	1-Alarms - Out of Service	1/0	00324+48(#-1)	n+5/1(12)
L#CC	R	1-Configuration has Changed	1/0	00325+48(#-1)	n+5/1(13)
L#NA	R/W	1-Unacknowledged Loop Event	1/0	00326+48(#-1)	n+5/1(14)
L#AE	R	1-Active Loop Event	1/0	00327+48(#-1)	n+5/1(15)

* These bits indicate the status of the switch input MD. A write of a “1” will have the same effect as pressing and releasing the button on the faceplate. If the action of the switch is sustained, the switch will change position. If the action is momentary, the switch will close for one scan cycle.

Analog Indicator Loop Status Word (L#***W1) - channel n+4/parameter 1***

BIT	Description	Value	Block	Read/Write	Output
0	P1 Alarm A is Active (A1)	1-Active	ALARM	R	
1	P1 Alarm A is Not Ack'd (N1)	1-Not Acknowledged	ALARM	R/W	
2	P1 Alarm A is Enabled (E1)	1-Enabled	ALARM	R/W	
3	P1 Alarm B is Active (A1)	1-Active	ALARM	R	
4	P1 Alarm B is Not Ack'd (N1)	1-Not Acknowledged	ALARM	R/W	
5	P1 Alarm B is Enabled (E1)	1-Enabled	ALARM	R/W	
6	P2 Alarm A is Active (A1)	1-Active	ALARM	R	
7	P2 Alarm A is Not Ack'd (N1)	1-Not Acknowledged	ALARM	R/W	
8	P2 Alarm A is Enabled (E1)	1-Enabled	ALARM	R/W	
9	P2 Alarm B is Active (A1)	1-Active	ALARM	R	
10	P2 Alarm B is Not Ack'd (N1)	1-Not Acknowledged	ALARM	R/W	
11	P2 Alarm B is Enabled (E1)	1-Enabled	ALARM	R/W	
12	Alarms are Out of Service (OS)	1-Out of Service	ALARM	R/W	
13	PB1SW Input MD (PB1)	1/0 (write of 1 presses PB)	PB1SW	R/W	
14	PB2SW Input MD (PB2)	1/0 (write of 1 presses PB)	PB2SW	R/W	
15	PB3SW Input MD (PB3)	1/0 (write of 1 presses PB)	PB2SW	R/W	

Analog Indicator Loop Alarm Status Word (L#***SW2) - channel n+5/parameter 1***

BIT	Description	Value	Block	Read/Write	Output
0	P3 Alarm A is Active (A1)	1-Active	ALARM	R	
1	P3 Alarm A is Not Ack'd (N1)	1-Not Acknowledged	ALARM	R/W	
2	P3 Alarm A is Enabled (E1)	1-Enabled	ALARM	R/W	
3	P3 Alarm B is Active (A1)	1-Active	ALARM	R	
4	P3 Alarm B is Not Ack'd (N1)	1-Not Acknowledged	ALARM	R/W	
5	P3 Alarm B is Enabled (E1)	1-Enabled	ALARM	R/W	
6	P4 Alarm A is Active (A1)	1-Active	ALARM	R	
7	P4 Alarm A is Not Ack'd (N1)	1-Not Acknowledged	ALARM	R/W	
8	P4 Alarm A is Enabled (E1)	1-Enabled	ALARM	R/W	
9	P4 Alarm B is Active (A1)	1-Active	ALARM	R	
10	P4 Alarm B is Not Ack'd (N1)	1-Not Acknowledged	ALARM	R/W	
11	P4 Alarm B is Enabled (E1)	1-Enabled	ALARM	R/W	
12	Alarms are Out of Service (OS)	1-Out of Service	ALARM	R/W	
13	Configuration has Changed (CC)	1-Loop Configured		R	
14	Unacknowledged Loop Event (NA)	1-Unacknowledged Event		R/W	
15	Active Loop Event (AE)	1- Active Loop Event		R	

7.6.8.4 Digital Indicator [ODD] - (V2.2)

Code	R/W	Description	Range	Coil(MB)	C/P (LIL)
L#D0I	R	Discrete 0 Input 1-ON 0-OFF	1/0	00296+48(#-1)	n/1(0)
L#D1I	R	Discrete 1 Input 1-ON 0-OFF	1/0	00297+48(#-1)	n/1(1)
L#D2I	R	Discrete 2 Input 1-ON 0-OFF	1/0	00298+48(#-1)	n/1(2)
L#D3I	R	Discrete 3 Input 1-ON 0-OFF	1/0	00299+48(#-1)	n/1(3)
L#D4I	R	Discrete 4 Input 1-ON 0-OFF	1/0	00300+48(#-1)	n/1(4)
L#D5I	R	Discrete 5 Input 1-ON 0-OFF	1/0	00301+48(#-1)	n/1(5)
L#D6I	R	Discrete 6 Input 1-ON 0-OFF	1/0	00302+48(#-1)	n/1(6)
L#D7I	R	Discrete 7 Input 1-ON 0-OFF	1/0	00303+48(#-1)	n/1(7)
L#D8I	R	Discrete 8 Input 1-ON 0-OFF	1/0	00304+48(#-1)	n/1(8)
L#D9I	R	Discrete 9 Input 1-ON 0-OFF	1/0	00305+48(#-1)	n/1(9)
L#DAI	R	Discrete A Input 1-ON 0-OFF	1/0	00306+48(#-1)	n/1(10)
L#DBI	R	Discrete B Input 1-ON 0-OFF	1/0	00307+48(#-1)	n/1(11)
L#DCI	R	Discrete C Input 1-ON 0-OFF	1/0	00308+48(#-1)	n/1(12)
L#DDI	R	Discrete D Input 1-ON 0-OFF	1/0	00309+48(#-1)	n/1(13)
L#DEI	R	Discrete E Input 1-ON 0-OFF	1/0	00310+48(#-1)	n/1(14)
L#DFI	R	Discrete F Input 1-ON 0-OFF	1/0	00311+48(#-1)	n/1(15)
L#D0S	R/W	Discrete 0 Status 1-Auto 0-Manual (*)	1/0	00312+48(#-1)	n+1/1(0)
L#D1S	R/W	Discrete 1 Status 1-Auto 0-Manual (*)	1/0	00313+48(#-1)	n+1/1(1)
L#D2S	R/W	Discrete 2 Status 1-Auto 0-Manual (*)	1/0	00314+48(#-1)	n+1/1(2)
L#D3S	R/W	Discrete 3 Status 1-Auto 0-Manual (*)	1/0	00315+48(#-1)	n+1/1(3)
L#D4S	R/W	Discrete 4 Status 1-Auto 0-Manual (*)	1/0	00316+48(#-1)	n+1/1(4)
L#D5S	R/W	Discrete 5 Status 1-Auto 0-Manual (*)	1/0	00317+48(#-1)	n+1/1(5)
L#D6S	R/W	Discrete 6 Status 1-Auto 0-Manual (*)	1/0	00318+48(#-1)	n+1/1(6)
L#D7S	R/W	Discrete 7 Status 1-Auto 0-Manual (*)	1/0	00319+48(#-1)	n+1/1(7)
L#D8S	R/W	Discrete 8 Status 1-Auto 0-Manual (*)	1/0	00320+48(#-1)	n+1/1(8)
L#D9S	R/W	Discrete 9 Status 1-Auto 0-Manual (*)	1/0	00321+48(#-1)	n+1/1(9)
L#DAS	R/W	Discrete A Status 1-Auto 0-Manual (*)	1/0	00322+48(#-1)	n+1/1(10)
L#DBS	R/W	Discrete B Status 1-Auto 0-Manual (*)	1/0	00323+48(#-1)	n+1/1(11)
L#DCS	R/W	Discrete C Status 1-Auto 0-Manual (*)	1/0	00324+48(#-1)	n+1/1(12)
L#DDS	R/W	Discrete D Status 1-Auto 0-Manual (*)	1/0	00325+48(#-1)	n+1/1(13)
L#DES	R/W	Discrete E Status 1-Auto 0-Manual (*)	1/0	00326+48(#-1)	n+1/1(14)
L#DFS	R/W	Discrete F Status 1-Auto 0-Manual (*)	1/0	00327+48(#-1)	n+1/1(15)
L#D0O	R/W	Discrete 0 Output 1-ON 0-OFF	1/0	00328+48(#-1)	n+2/1(0)
L#D1O	R/W	Discrete 1 Output 1-ON 0-OFF	1/0	00329+48(#-1)	n+2/1(1)
L#D2O	R/W	Discrete 2 Output 1-ON 0-OFF	1/0	00330+48(#-1)	n+2/1(2)
L#D3O	R/W	Discrete 3 Output 1-ON 0-OFF	1/0	00331+48(#-1)	n+2/1(3)
L#D4O	R/W	Discrete 4 Output 1-ON 0-OFF	1/0	00332+48(#-1)	n+2/1(4)
L#D5O	R/W	Discrete 5 Output 1-ON 0-OFF	1/0	00333+48(#-1)	n+2/1(5)
L#D6O	R/W	Discrete 6 Output 1-ON 0-OFF	1/0	00334+48(#-1)	n+2/1(6)
L#D7O	R/W	Discrete 7 Output 1-ON 0-OFF	1/0	00335+48(#-1)	n+2/1(7)
L#D8O	R/W	Discrete 8 Output 1-ON 0-OFF	1/0	00336+48(#-1)	n+2/1(8)
L#D9O	R/W	Discrete 9 Output 1-ON 0-OFF	1/0	00337+48(#-1)	n+2/1(9)
L#DAO	R/W	Discrete A Output 1-ON 0-OFF	1/0	00338+48(#-1)	n+2/1(10)
L#DBO	R/W	Discrete B Output 1-ON 0-OFF	1/0	00339+48(#-1)	n+2/1(11)
L#DCO	R/W	Discrete C Output 1-ON 0-OFF	1/0	00340+48(#-1)	n+2/1(12)
L#DDO	R/W	Discrete D Output 1-ON 0-OFF	1/0	00341+48(#-1)	n+2/1(13)
L#DEO	R/W	Discrete E Output 1-ON 0-OFF	1/0	00342+48(#-1)	n+2/1(14)
L#DFO	R/W	Discrete F Output 1-ON 0-OFF	1/0	00343+48(#-1)	n+2/1(15)
L#PB1	R/W	PB1SW Input MD (**)	1/0	08701+16(#-1)	n+3/1(0)
L#PB2	R/W	PB2SW Input MD (**)	1/0	08702+16(#-1)	n+3/1(1)
		(spares)		08704-08716+16(#-1)	

* L#DnS - writing a "1" toggles the switch, Reading "1" indicates Auto Status, reading "0" indicate Man status.

** L#PB1 & L#PB2 - writing a "1" to the controller will have the same affect as pushing the button on the faceplate of the controller. If the action of the switch is sustained, the switch will change position. If the action is momentary, the switch will close for one scan cycle. Reading the bits indicates the status of the switch MD input

Digital Indicator Loop Status Word (L#DISW***) - channel n/parameter 1***

BIT	Description	Value	Block	Read/Write	Output
0	Discrete 0 Input Value	1 - ON 0 - OFF	ODD	R	
1	Discrete 1 Input Value	1 - ON 0 - OFF	ODD	R	
2	Discrete 2 Input Value	1 - ON 0 - OFF	ODD	R	
3	Discrete 3 Input Value	1 - ON 0 - OFF	ODD	R	
4	Discrete 4 Input Value	1 - ON 0 - OFF	ODD	R	
5	Discrete 5 Input Value	1 - ON 0 - OFF	ODD	R	
6	Discrete 6 Input Value	1 - ON 0 - OFF	ODD	R	
7	Discrete 7 Input Value	1 - ON 0 - OFF	ODD	R	
8	Discrete 8 Input Value	1 - ON 0 - OFF	ODD	R	
9	Discrete 9 Input Value	1 - ON 0 - OFF	ODD	R	
10	Discrete A Input Value	1 - ON 0 - OFF	ODD	R	
11	Discrete B Input Value	1 - ON 0 - OFF	ODD	R	
12	Discrete C Input Value	1 - ON 0 - OFF	ODD	R	
13	Discrete D Input Value	1 - ON 0 - OFF	ODD	R	
14	Discrete E Input Value	1 - ON 0 - OFF	ODD	R	
15	Discrete F Input Value	1 - ON 0 - OFF	ODD	R	

Digital Indicator Loop Status Word (L#DSSW***) - channel n+1/parameter 1***

BIT	Description	Value	Block	Read/Write	Output
0	Discrete 0 Status (*)	1 - AUTO 0 - MANUAL	ODD	R/W	
1	Discrete 1 Status (*)	1 - AUTO 0 - MANUAL	ODD	R/W	
2	Discrete 2 Status (*)	1 - AUTO 0 - MANUAL	ODD	R/W	
3	Discrete 3 Status (*)	1 - AUTO 0 - MANUAL	ODD	R/W	
4	Discrete 4 Status (*)	1 - AUTO 0 - MANUAL	ODD	R/W	
5	Discrete 5 Status (*)	1 - AUTO 0 - MANUAL	ODD	R/W	
6	Discrete 6 Status (*)	1 - AUTO 0 - MANUAL	ODD	R/W	
7	Discrete 7 Status (*)	1 - AUTO 0 - MANUAL	ODD	R/W	
8	Discrete 8 Status (*)	1 - AUTO 0 - MANUAL	ODD	R/W	
9	Discrete 9 Status (*)	1 - AUTO 0 - MANUAL	ODD	R/W	
10	Discrete A Status (*)	1 - AUTO 0 - MANUAL	ODD	R/W	
11	Discrete B Status (*)	1 - AUTO 0 - MANUAL	ODD	R/W	
12	Discrete C Status (*)	1 - AUTO 0 - MANUAL	ODD	R/W	
13	Discrete D Status (*)	1 - AUTO 0 - MANUAL	ODD	R/W	
14	Discrete E Status (*)	1 - AUTO 0 - MANUAL	ODD	R/W	
15	Discrete F Status (*)	1 - AUTO 0 - MANUAL	ODD	R/W	

* A mask on command will toggle the position of the Auto/Man switch.

Digital Indicator Loop Status Word (L#DOSW***) - channel n+2/parameter 1***

BIT	Description	Value	Block	Read/Write	Output
0	Discrete 0 Output Value	1 - ON 0 - OFF	ODD	R/W	O0
1	Discrete 1 Output Value	1 - ON 0 - OFF	ODD	R/W	O1
2	Discrete 2 Output Value	1 - ON 0 - OFF	ODD	R/W	O2
3	Discrete 3 Output Value	1 - ON 0 - OFF	ODD	R/W	O3
4	Discrete 4 Output Value	1 - ON 0 - OFF	ODD	R/W	O4
5	Discrete 5 Output Value	1 - ON 0 - OFF	ODD	R/W	O5
6	Discrete 6 Output Value	1 - ON 0 - OFF	ODD	R/W	O6
7	Discrete 7 Output Value	1 - ON 0 - OFF	ODD	R/W	O7
8	Discrete 8 Output Value	1 - ON 0 - OFF	ODD	R/W	O8
9	Discrete 9 Output Value	1 - ON 0 - OFF	ODD	R/W	O9
10	Discrete A Output Value	1 - ON 0 - OFF	ODD	R/W	OA
11	Discrete B Output Value	1 - ON 0 - OFF	ODD	R/W	OB
12	Discrete C Output Value	1 - ON 0 - OFF	ODD	R/W	OC
13	Discrete D Output Value	1 - ON 0 - OFF	ODD	R/W	OD
14	Discrete E Output Value	1 - ON 0 - OFF	ODD	R/W	OE
15	Discrete F Output Value	1 - ON 0 - OFF	ODD	R/W	OF

Digital Indicator Loop Status Word (L#S***W) - channel n+3/parameter 1***

BIT	Description	Value	Block	Read/Write	Output
0	PB1SW Input MD (PB1)	1/0 (write of 1 presses PB)	PB1SW	R/W	
1	PB2SW Input MD (PB2)	1/0 (write of 1 presses PB)	PB2SW	R/W	
2					
3					
4					
5					
6					
7					
8					
9					
10					
11					
12					
13					
14					
15					

7.6.8.5 Pushbutton/Switch Indicator [ODP] - (V2.2)

Code	R/W	Description	Range	Coil(MB)	C/P (LIL)
L#G1P1	W	Group 1 - Press PB1 (*)	1	00296+48(#-1)	n/1(0)
L#G1P2	W	Group 1 - Press PB2 (*)	1	00297+48(#-1)	n/1(1)
L#G1S3	R/W	Group 1 - Auto/Man Switch (*)	1/0	00298+48(#-1)	n/1(2)
L#G1FS	R	Group 1 Feedback Status	1/0	00299+48(#-1)	n/1(3)
L#G2P1	W	Group 2 - Press PB1 (*)	1	00300+48(#-1)	n/1(4)
L#G2P2	W	Group 2 - Press PB2 (*)	1	00301+48(#-1)	n/1(5)
L#G2S3	R/W	Group 2 - Auto/Man Switch (*)	1/0	00302+48(#-1)	n/1(6)
L#G2FS	R	Group 2 - Feedback Status	1/0	00303+48(#-1)	n/1(7)
L#G3P1	W	Group 3 - Press PB1 (*)	1	00304+48(#-1)	n/1(8)
L#G3P2	W	Group 3 - Press PB2 (*)	1	00305+48(#-1)	n/1(9)
L#G3S3	R/W	Group 3 - Auto/Man Switch (*)	1/0	00306+48(#-1)	n/1(10)
L#G3FS	R	Group 3 - Feedback Status	1/0	00307+48(#-1)	n/1(11)
L#G4P1	W	Group 4 - Press PB1 (*)	1	00308+48(#-1)	n/1(12)
L#G4P2	W	Group 4 - Press PB2 (*)	1	00309+48(#-1)	n/1(13)
L#G4S3	R/W	Group 4 - Auto/Man Switch (*)	1/0	00310+48(#-1)	n/1(14)
L#G4FS	R	Group 4 - Feedback Status	1/0	00311+48(#-1)	n/1(15)
L#G5P1	W	Group 5 - Press PB1 (*)	1	00312+48(#-1)	n+1/1(0)
L#G5P2	W	Group 5 - Press PB2 (*)	1	00313+48(#-1)	n+1/1(1)
L#G5S3	R/W	Group 5 - Auto/Man Switch (*)	1/0	00314+48(#-1)	n+1/1(2)
L#G5FS	R	Group 5 - Feedback Status	1/0	00315+48(#-1)	n+1/1(3)
L#G6P1	W	Group 6 - Press PB1 (*)	1	00316+48(#-1)	n+1/1(4)
L#G6P2	W	Group 6 - Press PB2 (*)	1	00317+48(#-1)	n+1/1(5)
L#G6S3	R/W	Group 6 - Auto/Man Switch (*)	1/0	00318+48(#-1)	n+1/1(6)
L#G6FS	R	Group 6 - Feedback Status	1/0	00319+48(#-1)	n+1/1(7)
L#G7P1	W	Group 7 - Press PB1 (*)	1	00320+48(#-1)	n+1/1(8)
L#G7P2	W	Group 7 - Press PB2 (*)	1	00321+48(#-1)	n+1/1(9)
L#G7S3	R/W	Group 7 - Auto/Man Switch (*)	1/0	00322+48(#-1)	n+1/1(10)
L#G7FS	R	Group 7 - Feedback Status	1/0	00323+48(#-1)	n+11(11)
L#G8P1	W	Group 8 - Press PB1 (*)	1	00324+48(#-1)	n+1/1(12)
L#G8P2	W	Group 8 - Press PB2 (*)	1	00325+48(#-1)	n+1/1(13)
L#G8S3	R/W	Group 8 - Auto/Man Switch (*)	1/0	00326+48(#-1)	n+1/1(14)
L#G8FS	R	Group 8 - Feedback Status	1/0	00327+48(#-1)	n+1/1(15)

* L#GnS3 - reading a "1" indicates a switch position of Auto and reading a "0" indicates Man. Writing a "1" to the controller will toggle the state of the Auto/Man switch.

*L#GnP1 & L#GnP2 - writing a "1" to the controller will have the same affect as pushing the button on the faceplate of the controller.

Digital Indicator Loop Status Word (L#SW1***) - channel n/parameter 1***

BIT	Description	Value	Block	Read/Write	Output
0	Group 1 - Press PB1	1/0 (write of 1 presses PB)	ODP	W	
1	Group 1 - Press PB2	1/0 (write of 1 presses PB)	ODP	W	
2	Group 1 - Auto/Man Switch	1 - Auto 0- Manual *	ODP	R/W	
3	Group 1 - Feedback Status	1 - True 0- False	ODP	R	
4	Group 2 - Press PB1	1/0 (write of 1 presses PB)	ODP	W	
5	Group 2 - Press PB2	1/0 (write of 1 presses PB)	ODP	W	
6	Group 2 - Auto/Man Switch	1 - Auto 0- Manual *	ODP	R/W	
7	Group 2 - Feedback Status	1 - True 0- False	ODP	R	
8	Group 3 - Press PB1	1/0 (write of 1 presses PB)	ODP	W	
9	Group 3 - Press PB2	1/0 (write of 1 presses PB)	ODP	W	
10	Group 3 - Auto/Man Switch	1 - Auto 0- Manual *	ODP	R/W	
11	Group 3 - Feedback Status	1 - True 0- False	ODP	R	
12	Group 4 - Press PB1	1/0 (write of 1 presses PB)	ODP	W	
13	Group 4 - Press PB2	1/0 (write of 1 presses PB)	ODP	W	
14	Group 4 - Auto/Man Switch	1 - Auto 0- Manual *	ODP	R/W	
15	Group 4 - Feedback Status	1 - True 0- False	ODP	R	

Digital Indicator Loop Status Word (L#SW2***) - channel n+1/parameter 1***

BIT	Description	Value	Block	Read/Write	Output
0	Group 5 - Press PB1	1/0 (write of 1 presses PB)	ODP	W	
1	Group 5 - Press PB2	1/0 (write of 1 presses PB)	ODP	W	
2	Group 5 - Auto/Man Switch	1 - Auto 0- Manual *	ODP	R/W	
3	Group 5 - Feedback Status	1 - True 0- False	ODP	R	
4	Group 6 - Press PB1	1/0 (write of 1 presses PB)	ODP	W	
5	Group 6 - Press PB2	1/0 (write of 1 presses PB)	ODP	W	
6	Group 6 - Auto/Man Switch	1 - Auto 0- Manual *	ODP	R/W	
7	Group 6 - Feedback Status	1 - True 0- False	ODP	R	
8	Group 7 - Press PB1	1/0 (write of 1 presses PB)	ODP	W	
9	Group 7 - Press PB2	1/0 (write of 1 presses PB)	ODP	W	
10	Group 7 - Auto/Man Switch	1 - Auto 0- Manual *	ODP	R/W	
11	Group 7 - Feedback Status	1 - True 0- False	ODP	R	
12	Group 8 - Press PB1	1/0 (write of 1 presses PB)	ODP	W	
13	Group 8 - Press PB2	1/0 (write of 1 presses PB)	ODP	W	
14	Group 8 - Auto/Man Switch	1 - Auto 0- Manual *	ODP	R/W	
15	Group 8 - Feedback Status	1 - True 0- False	ODP	R	

* A mask on command will toggle the position of the Auto/Man switch.

7.6.9 PCOM Block Status

The PCOM block is included in MPU Controller board firmware version 1.30 and higher.

7.6.9.1 Controller/Sequencer

Code	R/W	Description	Range	Coil(MB)	C/P (LIL)
L#INIT_OK	R/W	1-INIT_OK	1/0	09101+32(#-1)	z/1(0)
L#DFAIL	R/W	1-DFAIL	1/0	09102+32(#-1)	z/1(1)
L#RESET	W	1-RESET	1/0	09103+32(#-1)	z/1(2)
L#START	W	1-START	1/0	09104+32(#-1)	z/1(3)
L#RESTART	W	1-RESTART	1/0	09105+32(#-1)	z/1(4)
L#HOLD	W	1-HOLD	1/0	09106+32(#-1)	z/1(5)
L#PCOMP	W	1-PCOMP	1/0	09107+32(#-1)	z/1(6)
L#ABORT	W	1-ABORT	1/0	09108+32(#-1)	z/1(7)
L#READY	R	1-READY	1/0	09109+32(#-1)	z/1(8)
L#RUN	R	1-RUN	1/0	09110+32(#-1)	z/1(9)
L#HELD	R	1-HELD	1/0	09111+32(#-1)	z/1(10)
L#DONE	R	1-DONE	1/0	09112+32(#-1)	z/1(11)
L#ABORTED	R	1-ABORTED	1/0	09113+32(#-1)	z/1(12)
spare	R		1/0	09114+32(#-1)	z/1(13)
spare	R		1/0	09115+32(#-1)	z/1(14)
spare	R		1/0	09116+32(#-1)	z/1(15)

Code	R/W	Description	Range	Coil(MB)	C/P (LIL)
L#EMERG (EO)	R	1-Emerg. Override	1/0	09117+32(#-1)	z+1/1(0)
L#NotAck'dEO	R/W	1-EO Not Ack'd	1/0	09118+32(#-1)	z+1/1(1)
L#INTRLK (IK)	R	1-INTRLK	1/0	09119+32(#-1)	z+1/1(2)
L#NotAck'd IK	R/W	1- IK Not Ack'd	1/0	09120+32(#-1)	z+1/1(3)
L#FAILED (FD)	R	1-FAILED	1/0	09121+32(#-1)	z+1/1(4)
L#NotAck'dFD	R/W	1- FD Not Ack'd	1/0	09122+32(#-1)	z+1/1(5)
spare	R	1/0		09123+32(#-1)	z+1/1(6)
spare	R		1/0	09124+32(#-1)	z+1/1(7)
spare	R		1/0	09125+32(#-1)	z+1/1(8)
spare	R		1/0	09126+32(#-1)	z+1/1(9)
spare	R		1/0	09127+32(#-1)	z+1/1(10)
spare	R		1/0	09128+32(#-1)	z+1/1(11)
spare	R		1/0	09129+32(#-1)	z+1/1(12)
spare	R		1/0	09130+32(#-1)	z+1/1(13)
L#NotAck'dPCOM	R/W	1-PCOM Event Not Ack'd	1/0	09131+32(#-1)	z+1/1(14)
L#ACTIVEPCOM	R	1-PCOM Event is Active	1/0	09132+32(#-1)	z+1/1(15)

z - LIL CHAN configured in the PCOM function block configuration.

PCOM Function Block Status Word (*L#*PSW1) - channel z/parameter 1

BIT	Description	Value	Block	Read/Write	Output
0	INIT_OK	1-INIT_OK	PCOM	R/W	
1	DFAIL	1-DFAIL	PCOM	R/W	
2	RESET	1-RESET	PCOM	W	
3	START	1-START	PCOM	W	
4	RESTART	1-RESTART	PCOM	W	
5	HOLD	1-HOLD	PCOM	W	
6	PCOMP	1-PCOMP	PCOM	W	
7	ABORT	1-ABORT	PCOM	W	
8	READY	1-READY	PCOM	R	
9	RUN	1-RUN	PCOM	R	
10	HELD	1-HELD	PCOM	R	
11	DONE	1-DONE	PCOM	R	
12	ABORTED	1-ABORTED	PCOM	R	
13	spare		PCOM		
14	spare		PCOM		
15	spare		PCOM		

PCOM Function Block Status Word (*L#*PSW2) - channel z+1/parameter 1

BIT	Description	Value	Block	Read/Write	Output
0	EMERG (EO)	1-EO is Active	PCOM	R	
1	EO Not Acknowledged	1-EO is not acknowledged	PCOM	R/W	
2	INTRLK (IK)	1-IK is Active	PCOM	R	
3	IK Not Acknowledged	1-IK is not acknowledged	PCOM	R/W	
4	FAILED (FD)	1-FD is Active	PCOM	R	
5	FD Not Acknowledged	1-FD is not acknowledged	PCOM	R/W	
6	spare		PCOM	R	
7	spare		PCOM	R	
8	spare		PCOM	R	
9	spare		PCOM	R	
10	spare		PCOM	R	
11	spare		PCOM	R	
12	spare		PCOM	R	
13	spare		PCOM	R	
14	PCOM Not Acknowledged	1-PCOM is not ack’d	PCOM	R/W	
15	ACTIVE PCOM Event (EO,IK,FD)	1- PCOM event is active	PCOM	R	

z - LIL CHAN configured in the PCOM function block configuration.

7.6.9.2 Sequencer Loop I/O Coil Data (1-bit)

Sequencer:

Code	R/W	Description	Range	Coil (MB)	C/P (LIL)
SG0KI0	R	Seq. Group 0 (cur. step) masK for Input 0	1/0	01496	n/13(0)
.....					
SG0KIF	R	Seq. Group 0 (cur. step) masK for Input F	1/0	01511	n/13(15)
SG0SI0	R	Seq. Group 0 (cur. step) State of Input 0	1/0	01512	n/14(0)
.....					
SG0SIF	R	Seq. Group 0 (cur. step) State of Input F	1/0	01527	n/14(15)
SG0SO0	R	Seq. Group 0 (cur. step) State of Output 0	1/0	01528	n/15(0)
.....					
SG0SOF	R	Seq. Group 0 (cur. step) State of Output F	1/0	01543	n/15(15)
.....					
.....					
SGFKI0	R	Seq. Group F (cur. step) masK for Input 0	1/0	02216	n+3/22(0)
.....					
SGFKIF	R	Seq. Group F (cur. step) masK for Input F	1/0	02231	n+3/22(15)
SGFSI0	R	Seq. Group F (cur. step) State of Input 0	1/0	02232	n+3/23(0)
.....					
SGFSIF	R	Seq. Group F (cur. step) State of Input F	1/0	02247	n+3/23(15)
SGFSO0	R	Seq. Group F (cur. step) State of Output 0	1/0	02248	n+3/24(0)
.....					
SGFSOF	R	Seq. Group F (cur. step) State of Output F	1/0	02263	n+3/24(15)

Sequencer Group n (current step) Mask Word for Inputs (SGnKI)

BIT	Description	Value	Block	Read/Write	Input
0	Group n, Input 0, Mask Config.	1-high 0-don't care	PRSEQ	R	n0
1	Group n, Input 1, Mask Config.	1-high 0-don't care	PRSEQ	R	n1
2	Group n, Input 2, Mask Config.	1-high 0-don't care	PRSEQ	R	n2
3	Group n, Input 3, Mask Config.	1-high 0-don't care	PRSEQ	R	n3
4	Group n, Input 4, Mask Config.	1-high 0-don't care	PRSEQ	R	n4
5	Group n, Input 5, Mask Config.	1-high 0-don't care	PRSEQ	R	n5
6	Group n, Input 6, Mask Config.	1-high 0-don't care	PRSEQ	R	n6
7	Group n, Input 7, Mask Config.	1-high 0-don't care	PRSEQ	R	n7
8	Group n, Input 8, Mask Config.	1-high 0-don't care	PRSEQ	R	n8
9	Group n, Input 9, Mask Config.	1-high 0-don't care	PRSEQ	R	n9
10	Group n, Input A, Mask Config.	1-high 0-don't care	PRSEQ	R	nA
11	Group n, Input B, Mask Config.	1-high 0-don't care	PRSEQ	R	nB
12	Group n, Input C, Mask Config.	1-high 0-don't care	PRSEQ	R	nC
13	Group n, Input D, Mask Config.	1-high 0-don't care	PRSEQ	R	nD
14	Group n, Input E, Mask Config.	1-high 0-don't care	PRSEQ	R	nE
15	Group n, Input F, Mask Config.	1-high 0-don't care	PRSEQ	R	nF

Sequencer Group n (current step) State Word of Inputs (SGnSI)

BIT	Description	Value	Block	Read/Write	Input
0	Group n, Input 0, State	1-high 0-low	PRSEQ	R/W(1)	n0
1	Group n, Input 1, State	1-high 0-low	PRSEQ	R/W(1)	n1
2	Group n, Input 2, State	1-high 0-low	PRSEQ	R/W(1)	n2
3	Group n, Input 3, State	1-high 0-low	PRSEQ	R/W(1)	n3
4	Group n, Input 4, State	1-high 0-low	PRSEQ	R/W(1)	n4
5	Group n, Input 5, State	1-high 0-low	PRSEQ	R/W(1)	n5
6	Group n, Input 6, State	1-high 0-low	PRSEQ	R/W(1)	n6
7	Group n, Input 7, State	1-high 0-low	PRSEQ	R/W(1)	n7
8	Group n, Input 8, State	1-high 0-low	PRSEQ	R/W(1)	n8
9	Group n, Input 9, State	1-high 0-low	PRSEQ	R/W(1)	n9
10	Group n, Input A, State	1-high 0-low	PRSEQ	R/W(1)	nA
11	Group n, Input B, State	1-high 0-low	PRSEQ	R/W(1)	nB
12	Group n, Input C, State	1-high 0-low	PRSEQ	R/W(1)	nC
13	Group n, Input D, State	1-high 0-low	PRSEQ	R/W(1)	nD
14	Group n, Input E, State	1-high 0-low	PRSEQ	R/W(1)	nE
15	Group n, Input F, State	1-high 0-low	PRSEQ	R/W(1)	nF

Sequencer Group n (current step) StateWord of Outputs (SGnSO)

BIT	Description	Value	Block	Read/Write	Output
0	Group n, Output 0, State	1-high 0-low	PRSEQ	R/W(1)	n0
1	Group n, Output 1, State	1-high 0-low	PRSEQ	R/W(1)	n1
2	Group n, Output 2, State	1-high 0-low	PRSEQ	R/W(1)	n2
3	Group n, Output 3, State	1-high 0-low	PRSEQ	R/W(1)	n3
4	Group n, Output 4, State	1-high 0-low	PRSEQ	R/W(1)	n4
5	Group n, Output 5, State	1-high 0-low	PRSEQ	R/W(1)	n5
6	Group n, Output 6, State	1-high 0-low	PRSEQ	R/W(1)	n6
7	Group n, Output 7, State	1-high 0-low	PRSEQ	R/W(1)	n7
8	Group n, Output 8, State	1-high 0-low	PRSEQ	R/W(1)	n8
9	Group n, Output 9, State	1-high 0-low	PRSEQ	R/W(1)	n9
10	Group n, Output A, State	1-high 0-low	PRSEQ	R/W(1)	nA
11	Group n, Output B, State	1-high 0-low	PRSEQ	R/W(1)	nB
12	Group n, Output C, State	1-high 0-low	PRSEQ	R/W(1)	nC
13	Group n, Output D, State	1-high 0-low	PRSEQ	R/W(1)	nD
14	Group n, Output E, State	1-high 0-low	PRSEQ	R/W(1)	nE
15	Group n, Output F, State	1-high 0-low	PRSEQ	R/W(1)	nF

(1) Writes are made using a parameter data send command (CMD 9) to the entire word

7.6.10 Universal Bus Discrete I/O Types, States & Forcing (353R) V2.0

7.6.10.1 Module Type - Ubus Address xx

UA01MT	R	Ubus Address 01 Module Type	(see table below)	47951	4/31
UA31MT	R	Ubus Address 31 Module Type	(see table below)	47981	4/61

7.6.10.2 Discrete I/O States & Forcing - Ubus Address xx

UA01ND-0	R	Ubus Address 01 Normal Value Discrete I/O-0	1/0	04001	1/31(0)
UA01ND-F	R	Ubus Address 01 Normal Value Discrete I/O-F	1/0	04016	1/31(15)
UA01MD-0	R/W	Ubus Address 01 Mode Discrete I/O-0 1-Forced, 0-Normal		04017	2/31(0)
UA01MD-F	R/W	Ubus Address 01 Mode Discrete I/O-F 1-Forced, 0-Normal		04032	2/31(15)
UA01FD-0	R/W	Ubus Address 01 Forced Value Discrete I/O-0	1/0	04033	3/31(0)
UA01ND-F	R/W	Ubus Address 01 Forced Value Discrete I/O-F	1/0	04048	3/31(15)
UA31ND-0	R	Ubus Address 31 Normal Value Discrete I/O-0	1/0	05441	1/61(0)
UA31ND-F	R	Ubus Address 31 Normal Value Discrete I/O-F	1/0	05456	1/61(15)
UA31MD-0	R/W	Ubus Address 31 Mode Discrete I/O-0 1-Forced, 0-Normal		05457	2/61(0)
UA31MD-F	R/W	Ubus Address 31 Mode Discrete I/O-F 1-Forced, 0-Normal		05472	2/61(15)
UA31FD-0	R/W	Ubus Address 31 Forced Value Discrete I/O-0	1/0	05473	3/61(0)
UA31ND-F	R/W	Ubus Address 31 Forced Value Discrete I/O-F	1/0	05488	3/61(15)

Note

See the table on the following page for a list of i|o module types and the controller firmware (FW) required to support the module.

i|o Modules and MPU Controller Board Firmware

Type Code	FW	Module Model Number	Module Description
40	2.0	iO-8DO250AEI	8-Channel DO, 20-250Vac, external powered isolated
41	2.0	iO-8DO250AMN	8-Channel DO, 20-250Vac, module powered non-isolated
42	2.0	iO-8DO60DEI	8-Channel DO, 20-60Vdc, external powered isolated
43	2.0	iO-8DO60DMN	8-Channel DO, 20-60Vdc, module powered non-isolated
50	2.3	iOS-4DO24DMN	4-Channel Digital Output Div. 2/1 Solenoid Driver (Intrinsically Safe)
82	2.0	iO-8DI24DSI	8-Channel DI, 24Vdc, sinking isolated
83	2.0	iO-8DI24DMN	8-Channel DI, 24Vdc, module powered non-isolated
84	2.0	iO-8DI115ASI	8-Channel DI, 115Vac, sinking isolated
85	2.0	iO-8DI115AMN	8-Channel DI, 115Vac, module powered non-isolated
86	2.0	iO-8DI230ASI	8-Channel DI, 230Vac, sinking isolated
87	2.0	iO-8DI230AMN	8-Channel DI, 230Vac, module powered non-isolated
91	2.0	iO-16DI24DMN	16-Channel DI, 24Vdc, module powered non-isolated
92	2.0	iO-16DI24DSI	16-Channel DI, 24Vdc, sinking isolated
120	2.3	iO-8AI-2	8-Channel AI, 4-20mA
121	2.3	iO-8AI-V	8-Channel AI, 1-5 Vdc
141	2.0	iO-4TC	4-Channel T/C, mv Input
142	2.0	iO-4RT	4-Channel RTD Input
145	2.3	iOS-8TC	8-Channel T/C, mv Input, Div. 2/1 (Intrinsically Safe)
146	2.3	iOS-8RT	8-Channel RTD Input, Div. 2/1 (Intrinsically Safe)
150	2.0	iO-8AI-2H	8-Channel AI, 4-20mA, HART
151	2.3	iOS-8AI-2H	8-Channel AI, 4-20mA, HART, Div. 2/1 (Intrinsically Safe)
160	2.3	iOS-8AO	8-Channel AO, 4-20mA, Div. 2/1 (Intrinsically Safe)
161	2.3	iOS-8AO-H	8-Channel AO, 4-20mA, HART, Div. 2/1 (Intrinsically Safe)
190	2.0	iO-8AO	8-Channel AO, 4-20mA
191	2.3	iO-8AO-H	8-Channel AO, 4-20mA, HART
90	2.3	iOS-16DIDMN	16-Channel DI Div. 2/1 (Intrinsically Safe)

7.6.10.3 Trend Data (Loop Defined by MLTP)

Included in MPU Controller board firmware version 1.30 and higher.

Code	R/W	Description	Range	Register (MB)	C/P (LIL)
A1RMN	R	ATD01 MIN SCALE	Real	48001	n/a
A1RMX	R	ATD01 MAX SCALE	Real	48003	n/a
A1DPP	R	ATD01 Decimal Point Position	0-5	48005	n/a
A1EU	R	ATD01 Engineering Units	6 ASCII Char	48006	n/a
A1YR	R	ATD01 Year V2.0 (5)	1997-	48009	n/a
A1MT	R	ATD01 Month V2.0 (5)	1-12	48010	n/a
A1DY	R	ATD01 Day V2.0 (5)	1-31	48011	n/a
A1HR	R	ATD01 Hour V2.0 (5)	0-23	48012	n/a
A1MN	R	ATD01 Minute V2.0 (5)	0-59	48013	n/a
A1SC	R	ATD01 Second V2.0 (5)	0-59	48014	n/a
A1ST	R/W*	ATD01 Sample Time x0.01=min	1-48000	48015	n/a
A1STC	R	ATD01 % Sample Time Complete	0-1000 (x.1=%)	48016	n/a
A1D1	R	ATD01 Data 1 (latest) 0-100%	128-3968	48017	n/a
A1D2	R	ATD01 Data 2 0-100%	128-3968	48018	n/a
A1D3	R	ATD01 Data 3 0-100%	128-3968	48019	n/a
.....					
A1D168	R	ATD01 Data 168 0-100%	128-3968	48184	n/a
A1D169	R	ATD01 Data 169 0-100%	128-3968	48185	n/a
A1D170	R	ATD01 Data 170 0-100%	128-3968	48186	n/a

* Writing to the sample time will reset all data points A1D1 through A1D170 to $0.

A2RMN	R	ATD02 MIN SCALE	Real	48201	n/a
A2RMX	R	ATD02 MAX SCALE	Real	48203	n/a
A2DPP	R	ATD02 Decimal Point Position	0-5	48205	n/a
A2EU	R	ATD02 Engineering Units	6 ASCII Char	48206	n/a
A2YR	R	ATD02 Year V2.0 (5)	1997	48209	n/a
A2MT	R	ATD02 Month V2.0 (5)	1-12	48210	n/a
A2DY	R	ATD02 Day V2.0 (5)	1-31	48211	n/a
A2HR	R	ATD02 Hour V2.0 (5)	0-23	48212	n/a
A2MN	R	ATD02 Minute V2.0 (5)	0-59	48213	n/a
A2SC	R	ATD02 Second V2.0 (5)	0-59	48214	n/a
A2ST	R/W*	ATD02 Sample Time x0.01=min	1-48000	48215	n/a
A2STC	R	ATD02 % Sample Time Complete	0-1000 (x.1=%)	48216	n/a
A2D1	R	ATD02 Data 1 (latest) 0-100%	128-3968	48217	n/a
A2D2	R	ATD02 Data 2 0-100%	128-3968	48218	n/a
A2D3	R	ATD02 Data 3 0-100%	128-3968	48219	n/a
.....					
A2D168	R	ATD02 Data 168 0-100%	128-3968	48384	n/a
A2D169	R	ATD02 Data 169 0-100%	128-3968	48385	n/a
A2D170	R	ATD02 Data 170 0-100%	128-3968	48386	n/a

* Writing to the sample time will reset all data points A2D1 through A2D170 to $0.

Code	R/W	Description	Range	Register (MB)	C/P (LIL)
A3RMN	R	ATD03 MIN SCALE	Real	48401	n/a
A3RMX	R	ATD03 MAX SCALE	Real	48403	n/a
A3DPP	R	ATD03 Decimal Point Position	0-5	48405	n/a
A3EU	R	ATD03 Engineering Units	6 ASCII Char	48406	n/a
A3YR	R	ATD03 Year V2.0 (5)	1997-	48409	n/a
A3MT	R	ATD03 Month V2.0 (5)	1-12	48410	n/a
A3DY	R	ATD03 Day V2.0 (5)	1-31	48411	n/a
A3HR	R	ATD03 Hour V2.0 (5)	0-23	48412	n/a
A3MN	R	ATD03 Minute V2.0 (5)	0-59	48413	n/a
A3SC	R	ATD03 Second V2.0 (5)	0-59	48414	n/a
A3ST	R/W*	ATD03 Sample Time x0.01=min	1-48000	48415	n/a
A3STC	R	ATD03 % Sample Time Complete	0-1000 (x.1=%)	48416	n/a
A3D1	R	ATD03 Data 1 (latest) 0-100%	128-3968	48417	n/a
A3D2	R	ATD03 Data 2 0-100%	128-3968	48418	n/a
A3D3	R	ATD03 Data 3 0-100%	128-3968	48419	n/a
.....					
A3D168	R	ATD03 Data 168 0-100%	128-3968	48584	n/a
A3D169	R	ATD03 Data 169 0-100%	128-3968	48585	n/a
A3D170	R	ATD03 Data 170 0-100%	128-3968	48586	n/a

* Writing to the sample time will reset all data points A3D1 through A3D170 to $0.

A4RMN	R	ATD04 MIN SCALE	Real	48601	n/a
A4RMX	R	ATD04 MAX SCALE	Real	48603	n/a
A4DPP	R	ATD04 Decimal Point Position	0-5	48605	n/a
A4EU	R	ATD04 Engineering Units	6 ASCII Char	48606	n/a
A4YR	R	ATD04 Year V2.0 (5)	1997-	48609	n/a
A4MT	R	ATD04 Month V2.0 (5)	1-12	48610	n/a
A4DY	R	ATD04 Day V2.0 (5)	1-31	48611	n/a
A4HR	R	ATD04 Hour V2.0 (5)	0-23	48612	n/a
A4MN	R	ATD04 Minute V2.0 (5)	0-59	48613	n/a
A4SC	R	ATD04 Second V2.0 (5)	0-59	48614	n/a
A4ST	R/W*	ATD04 Sample Time x0.01=min	1-48000	48615	n/a
A4STC	R	ATD04 % Sample Time Complete	0-1000 (x.1=%)	48616	n/a
A4D1	R	ATD04 Data 1 (latest) 0-100%	128-3968	48617	n/a
A4D2	R	ATD04 Data 2 0-100%	128-3968	48618	n/a
A4D3	R	ATD04 Data 3 0-100%	128-3968	48619	n/a
.....					
A4D168	R	ATD04 Data 168 0-100%	128-3968	48784	n/a
A4D169	R	ATD04 Data 169 0-100%	128-3968	48785	n/a
A4D170	R	ATD04 Data 170 0-100%	128-3968	48786	n/a

* Writing to the sample time will reset all data points A4D1 through A4D170 to $0.

Code	R/W	Description	Range	Register (MB)	C/P (LIL)
A5RMN	R	ATD05 MIN SCALE	Real	48801	n/a
A5RMX	R	ATD05 MAX SCALE	Real	48803	n/a
A5DPP	R	ATD05 Decimal Point Position	0-5	48805	n/a
A5EU	R	ATD05 Engineering Units	6 ASCII Char	48806	n/a
A5YR	R	ATD05 Year V2.0 (5)	1997-	48809	n/a
A5MT	R	ATD05 Month V2.0 (5)	1-12	48810	n/a
A5DY	R	ATD05 Day V2.0 (5)	1-31	48811	n/a
A5HR	R	ATD05 Hour V2.0 (5)	0-23	48812	n/a
A5MN	R	ATD05 Minute V2.0 (5)	0-59	48813	n/a
A5SC	R	ATD05 Second V2.0 (5)	0-59	48814	n/a
A5ST	R/W*	ATD05 Sample Time x0.01=min	1-48000	48815	n/a
A5STC	R	ATD05 % Sample Time Complete	0-1000 (x.1=%)	48816	n/a
A5D1	R	ATD05 Data 1 (latest) 0-100%	128-3968	48817	n/a
A5D2	R	ATD05 Data 2 0-100%	128-3968	48818	n/a
A5D3	R	ATD05 Data 3 0-100%	128-3968	48819	n/a
.....					
A5D168	R	ATD05 Data 168 0-100%	128-3968	48984	n/a
A5D169	R	ATD05 Data 169 0-100%	128-3968	48985	n/a
A5D170	R	ATD05 Data 170 0-100%	128-3968	48986	n/a

* Writing to the sample time will reset all data points A5D1 through A5D170 to $0.

Note:

1. A read of any Time Stamp Data (i.e. Year, Month, Day, Hour, Minute, Second, or Sample Time) will update all Loop data registers. Additional data reads of Trend data within the same block should only request data so as to obtain a complete set of time synchronized data.

2. The Trend data is obtained from the loop referenced by the MLTP parameter (register 40058). This parameter can also be written to change the loop.

3. Parameter NTTB will indicate the number of ATD Analog Trend Display blocks that are available in the loop specified by the MLTP.

4. Undefined data (e.g. unconfigured inputs, period station was in HOLD or powered down) is represented by a value of $0.

5. Real time clock data requires the optional RTC/CB (Real Time Clock/Configuration Backup) board shipped after July 1999 and Version 2.0 or later MPU Controller board firmware.

7.6.11 Configuration Data Sequencer Loop

The Modbus registers and LIL parameters on this page refer to configuration parameters of function blocks within a specific loop previously defined by Modbus parameter MSLCP (40048) or LIL parameter LSLCP (7/1). For example: to read or write the Step 1 Group 0 Input Mask for the PRSEQ block that is in a loop with a Modbus Index of 3, write a 3 to 40048, then read or write to register 410001.

Sequencer (MASK Configurations)

Code	`R/W	Description	Range	Register (MB)	C/P (LIL)
S001G0I	R/W	Step 1 Group 0 Input Mask	$0000-$FFFF	410001	1/154
S001G0O	R/W	Step 1 Group 0 Output Mask	$0000-$FFFF	410002	1/170
S001G1I	R/W	Step 1 Group 1 Input Mask	$0000-$FFFF	410003	1/155
S001G1O	R/W	Step 1 Group 1 Output Mask	$0000-$FFFF	410004	1/171
S001G2I	R/W	Step 1 Group 2 Input Mask	$0000-$FFFF	410005	1/156
S001G2O	R/W	Step 1 Group 2 Output Mask	$0000-$FFFF	410006	1/172
S001G3I	R/W	Step 1 Group 3 Input Mask	$0000-$FFFF	410007	1/157
S001G3O	R/W	Step 1 Group 3 Output Mask	$0000-$FFFF	410008	1/173
.....					
S250GEI	R/W	Step 250 Group E Input Mask	$0000-$FFFF	417997	250/168
S250GEO	R/W	Step 250 Group E Output Mask	$0000-$FFFF	417998	250/184
S250GFI	R/W	Step 250 Group F Input Mask	$0000-$FFFF	417999	250/169
S250GFO	R/W	Step 250 Group F Output Mask	$0000-$FFFF	418000	250/185

7.6.12 Real TimeTrip Block Configurations

Code	R/W	Description	Range	Register (MB)	C/P (LIL)
RTT01Y	R/W	Year	1999-	419001	1/100 V 2.0
RTT01M	R/W	Month	1-12	419002	1/101 V 2.0
RTT01D	R/W	Day	1-31	419003	1/102 V 2.0
RTT01HR	R/W	Hour	0-23	419004	1/103 V 2.0
RTT01MN	R/W	Minute	0-59	419005	1/104 V 2.0
RTT01SC	R/W	Second	0-59	419006	1/105 V 2.0
RTT01DA	R/W	Day	0000 0000 0SMT WTFS	419007	1/106 V 2.0
RTT02Y	R/W	Year	1999-	419008	2/100 V 2.0
RTT02M	R/W	Month	1-12	419009	2/101 V 2.0
RTT02D	R/W	Day	1-31	419010	2/102 V 2.0
RTT02HR	R/W	Hour	0-23	419011	2/103 V 2.0
RTT02MN	R/W	Minute	0-59	419012	2/104 V 2.0
RTT02SC	R/W	Second	0-59	419013	2/105 V 2.0
RTT02DA	R/W	Day	0000 0000 0SMT WTFS	419014	2/106 V 2.0
RTT03Y	R/W	Year	1999-	419015	3/100 V 2.0
RTT03M	R/W	Month	1-12	419016	3/101 V 2.0
RTT03D	R/W	Day	1-31	419017	3/102 V 2.0
RTT03HR	R/W	Hour	0-23	419018	3/103 V 2.0
RTT03MN	R/W	Minute	0-59	419019	3/104 V 2.0
RTT03SC	R/W	Second	0-59	419020	3/105 V 2.0
RTT03DA	R/W	Day	0000 0000 0SMT WTFS	419021	3/106 V 2.0

7.6.13 Sequencer Time & Analog Configurations

Code	R/W	Description	Range	Register (MB)	C/P (LIL)
S001TIM	R/W	Step 1 Time Period (min)	Real	420001	1/150-151
S001AEP	R/W	Step 1 Analog End Point	Real	420003	1/152-153
S002TIM	R/W	Step 2 Time Period (min)	Real	420005	2/150-151
S002AEP	R/W	Step 2 Analog End Point	Real	420007	2/152-153
S003TIM	R/W	Step 3 Time Period (min)	Real	420009	3/150-151
S003AEP	R/W	Step 3 Analog End Point	Real	420011	3/152-153
S004TIM	R/W	Step 4 Time Period (min)	Real	420013	4/150-151
S004AEP	R/W	Step 4 Analog End Point	Real	420015	4/152-153
.....					
S246TIM	R/W	Step 246 Time Period (min)	Real	420981	246/150-151
S246AEP	R/W	Step 246 Analog End Point	Real	420983	246/152-153
S247TIM	R/W	Step 247 Time Period (min)	Real	420985	247/150-151
S247AEP	R/W	Step 247 Analog End Point	Real	420987	247/152-153
S248TIM	R/W	Step 248 Time Period (min)	Real	420989	248/150-151
S2488AEP	R/W	Step24 8 Analog End Point	Real	420991	248/152-153
S249TIM	R/W	Step 249 Time Period (min)	Real	420993	249/150-151
S249AEP	R/W	Step 249 Analog End Point	Real	420995	249/152-153
S250TIM	R/W	Step 250 Time Period (min)	Real	420997	250/150-151
S250AEP	R/W	Step 250 Analog End Point	Real	420999	250/152-153

7.6.14 Timer Function Block Configurations

Code	R/W	Description	Range	Register (MB)	C/P (LIL)
DYT01T	R/W	Delay Timer 01 Time (min)	Real	421001	1/190-1/191
OST01T	R/W	One Shot Timer 01Time (min)	Real	421003	1/192-1/193
RCT01NT	R/W	Rept Cy Timer 01 ON Time (min)	Real	421005	1/194-1/195
RCT01FT	R/W	Rept Cy Timer 01 OFFTime (min)	Real	421007	1/196-1/197
ROT01T	R/W	Retentive On Timer 01 Time (min)	Real	421009	1/198-1/199
.....					
DYT21T	R/W	Delay Timer 21 Time (min)	Real	421201	1/190-1/191
OST21T	R/W	One Shot Timer 21Time (min)	Real	421203	1/192-1/193
RCT21NT	R/W	Rept Cy Timer 21 ON Time (min)	Real	421205	1/194-1/195
RCT21FT	R/W	Rept Cy Timer 21 OFFTime (min)	Real	421207	1/196-1/197
ROT21T	R/W	Retentive On Timer 21 Time (min)	Real	421209	1/198-1/199

7.6.15 LIL Alarm Type Word (ATW)

BITS: 2 1 0
- 0 0 0 - no alarm action is required
- 0 0 1 - HIGH Alarm
- 0 1 0 - LOW Alarm
- 0 1 1 - HIGH DEVIATION Alarm
- 1 0 0 - LOW DEVIATION Alarm
- 1 0 1 - ABSOLUTE DEVIATION Alarm
- 1 1 0 - OUT OF RANGE Alarm
- 1 1 1 - no alarm action is required

BITS: 4 3
- 0 0 - 0.1 % alarm deadband
- 0 1 - 0.5 % alarm deadband
- 1 0 - 1.0 % alarm deadband
- 1 1 - 5.0 % alarm deadband

BITS: 7 6 5
- 0 0 0 - 0.0 seconds - delay time IN
- 0 0 1 - 0.4 seconds - delay time IN
- 0 1 0 - 1.0 seconds - delay time IN
- 0 1 1 - 2.0 seconds - delay time IN
- 1 0 0 - 5.0 seconds - delay time IN
- 1 0 1 - 15.0 seconds - delay time IN
- 1 1 0 - 30.0 seconds - delay time IN
- 1 1 1 - 60.0 seconds - delay time IN

BITS: 10 9 8
- 0 0 0 - 0.0 seconds - delay time OUT
- 0 0 1 - 0.4 seconds - delay time OUT
- 0 1 0 - 1.0 seconds - delay time OUT
- 0 1 1 - 2.0 seconds - delay time OUT
- 1 0 0 - 5.0 seconds - delay time OUT
- 1 0 1 - 15.0 seconds - delay time OUT
- 1 1 0 - 30.0 seconds - delay time OUT
- 1 1 1 - 60.0 seconds - delay time OUT

BIT: 11
- 0 - (ringback option is not required)
- 1 - RINGBACK

BITS: 12 through 15 - changes to these bits will be ignored.

■

8.0 CARRIER AND FACEPLATE MOUNTING AND POWER WIRING

This section provides procedures for the mounting of each type of carrier and each type of faceplate. Wiring of AC and DC power is also discussed.

Installer Supplied Materials

Listed here are many of the materials and tools that may be needed by the installer. Some sites may need additional materials and tools.

- Cabinet or other enclosure appropriate to the environmental conditions. Refer to Section 15 Model Designations and System Specifications for environmental specifications. The enclosure should provide a flat rigid mounting surface for each control carrier, module carrier and power supply carrier.
- DIN rail section(s), as required
- Appropriate hardware for the selected mounting surface and mounting method
- AC power wiring and wire preparation tools
- 24 Vdc bussed field power wiring to one or more module carriers (connector to be cable mounted is supplied)
- Conduit, wire trays, and other AC and DC power wiring support devices as appropriate
- Common hand tools; a torque wrench (in-lbs/Nm) is recommended

Additional installer supplied materials may be listed in individual sections and in instructions supplied with related assemblies.

8.1 MODEL 353RCCB_ CONTROL CARRIER INSTALLATION

This section describes installation of the control carrier. Install a control carrier at each 353R network node. The following items can be connected to the carrier.

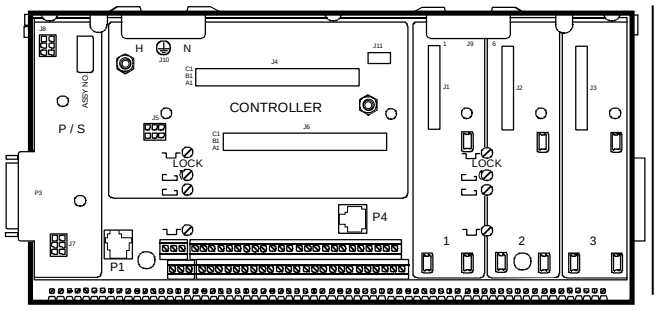

- Control Module (required)
- Power Supply Module (required)
- Up to 3 i|o Modules (optional)
- 120/240 Vac power input (required)
- Power Share Cable from the Power Supply Carrier (optional)
- Local Faceplate (optional)
- Module Carrier (optional) or Carrier Extenders (optional)

Install the control carrier on G or T-section DIN rail or on a flat panel. The mounting surface must be flat and rigid. The completed installation must be shielded from direct sunlight, excessive temperatures, inclement weather and gaseous, liquid, and particulate contaminants. Refer to the specifications for temperature, humidity and other environmental parameters before installing this equipment.

Figure 8-1 shows single and multiple row installations on DIN rail. Flat panel installations are similar. Note the use of carrier extenders in multiple row installations. When planning the installation, place peripheral equipment, wire duct, and conduit for ease of wiring and maintenance without restricting access to the carrier and installed modules.

Two installation kits containing range resistors, crimp-on connectors, and TC reference junctions are supplied with the carrier. These kits are listed under Accessories, General in Table 15-1 Model Designations in Section 15 Model Designations and System Specifications. The components in these kits are used as described in Section 9.1 Model 353RCM_ _ _ _B_.

8.1.1 Install the Control Carrier

Mount the carrier on G or T-section DIN rail or a flat panel. Be sure to allow sufficient clearance around the carrier for:

- Conduit and wire duct
- Wiring the AC power input connector
- Wiring to the shield earthing bar on the carrier lower edge
- Wiring to the two-tier control module field terminals (terminals 1-54) and to the iO field termination assemblies
- Bus power wiring to the connectors on the upper edge of a 4- or 8-module carrier
- Peripheral equipment such as the local faceplate, bus power supply, or i|station

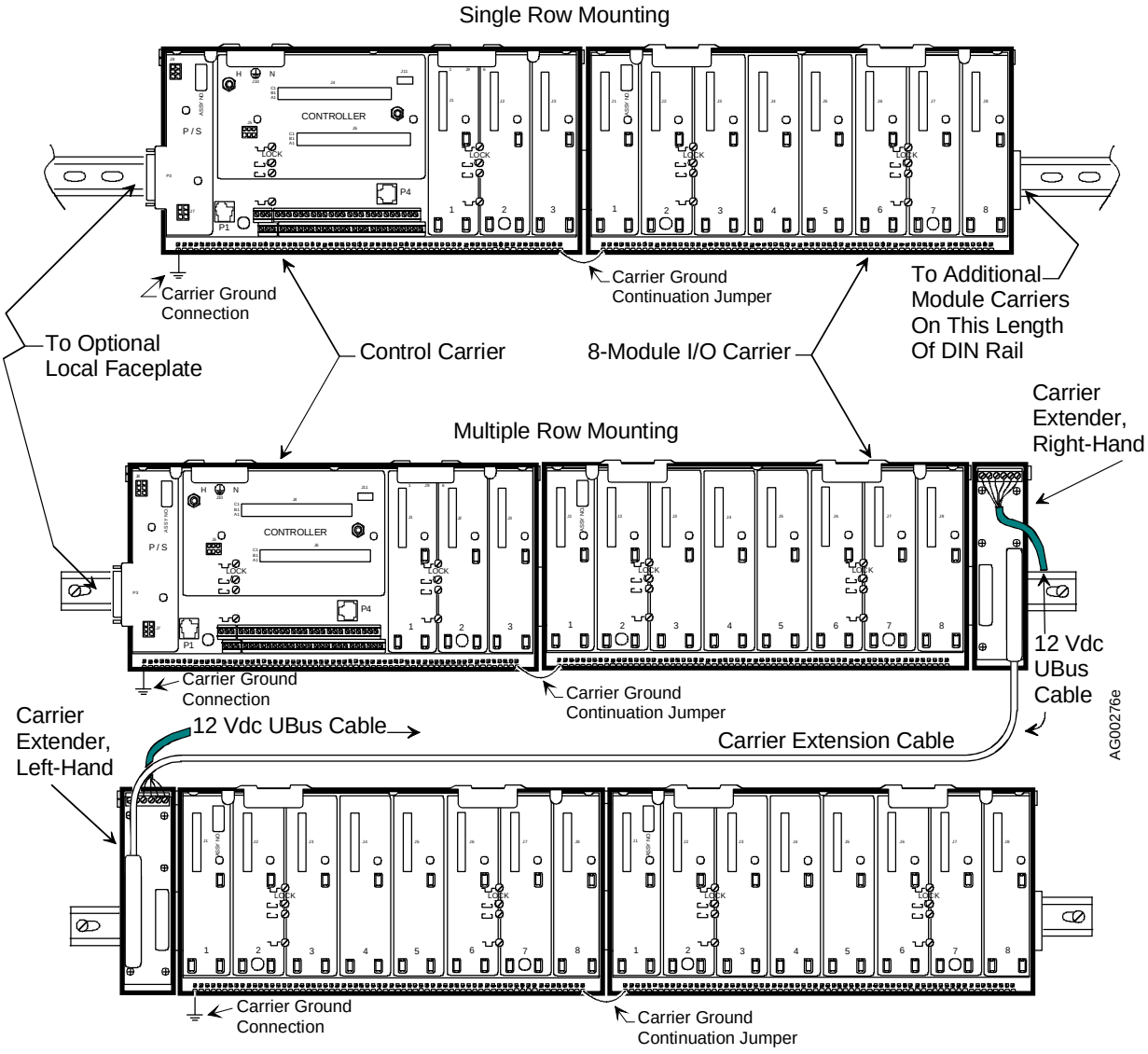

FIGURE 8-1 Single and Multiple Row Mounting

DIN Rail

Figure 8-2 shows control carrier dimensions and the location of the mounting screws with ¼ turn nuts that secure the carrier to the DIN rail. As shown by the symbols on the carrier, there are two pairs of mounting hardware for each DIN rail type.

1. Ensure that the ¼ turn nuts are retracted. If necessary, turn the DIN rail screws counterclockwise to position the nuts.
2. Locate and orient the carrier on the DIN rail.
3. Tighten the two pairs of screws for the selected DIN rail type. Maximum torque is 12 in-lb (1.32 Nm). Do not over tighten and damage the carrier.

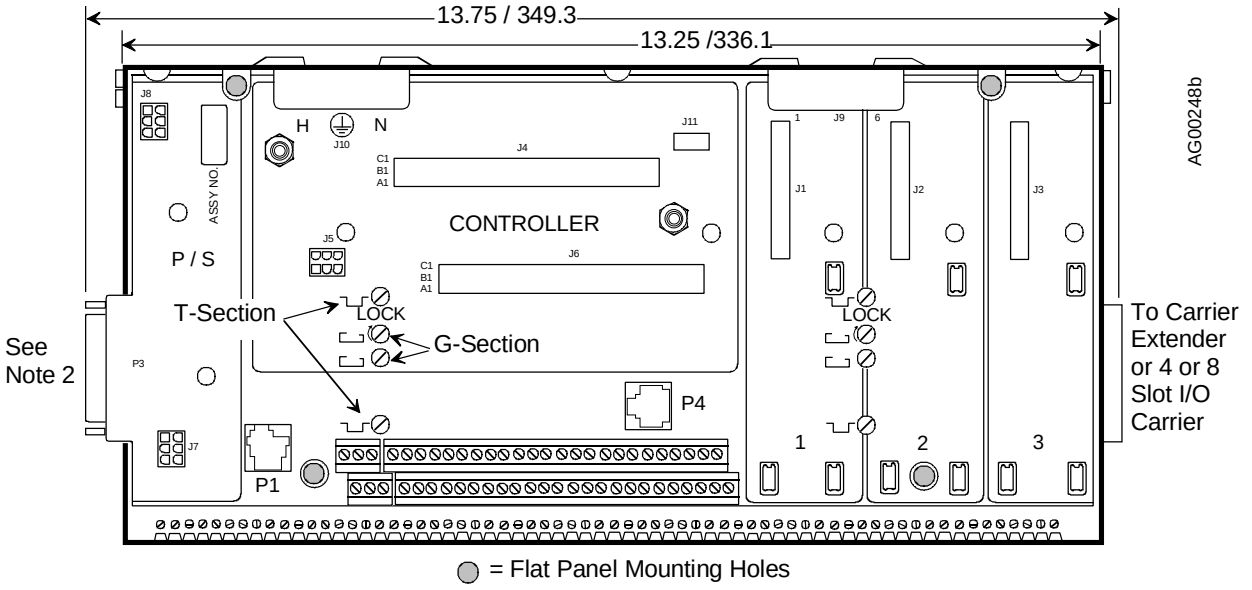

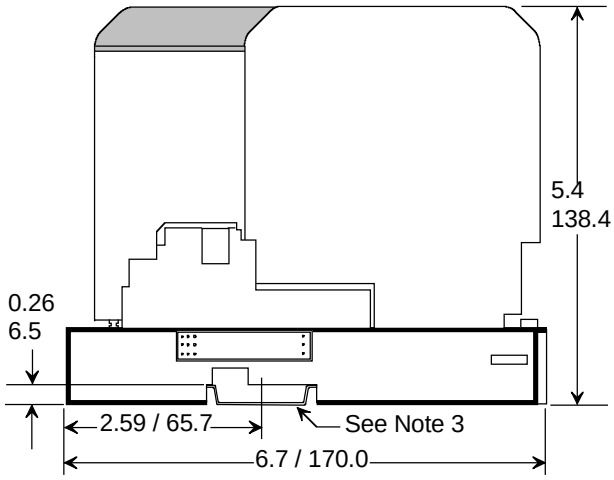

Notes:
1. Dimensions are in inches / millimeters.
2. Allow 2.5 / 63.5 for cable to remote mounted optional Faceplate. Allow 3.0 / 76 when Faceplate is mounted to the Controller Carrier.
3. G or T- section DIN Rail can be used.

FIGURE 8-2 Control Carrier Dimensions

Flat Panel

1. Refer to Figures 8-2 and 8-3 for mounting dimensions and for the mounting hole detail.
2. Select mounting hardware appropriate to the carrier and the panel material. Drill four mounting holes and otherwise prepare the panel.
3. Orient the carrier and insert the selected hardware. Tighten securely. Maximum torque is 12 in-lb (1.32 Nm). Do not over tighten and damage the carrier.

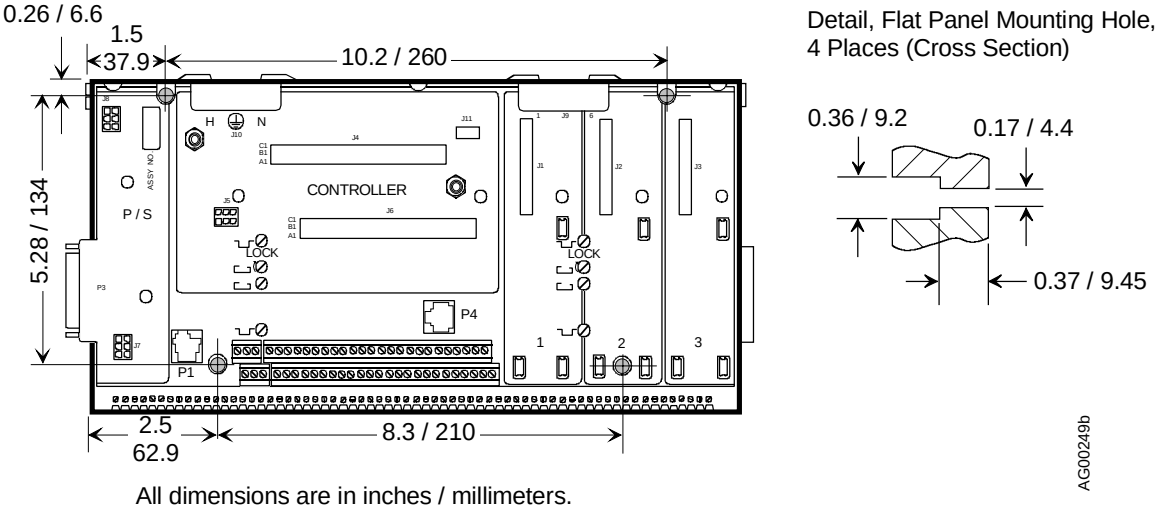

FIGURE 8-3 Flat Panel Mounting Dimensions

8.1.2 AC Power Wiring

AC power wiring is discussed in this aection. Wiring connections to Modbus connector P1, the ground bus terminals, and the controller field terminals are discussed in Section 9.1 Model 353RCM_ _ _ _B_. Connections to the i|o field terminals are shown in the individual i|o module sections in Section 9 Module Wiring and Specifications. AC power input wiring is discussed in the following section. Control carrier terminals are shown in Figure 8-4.

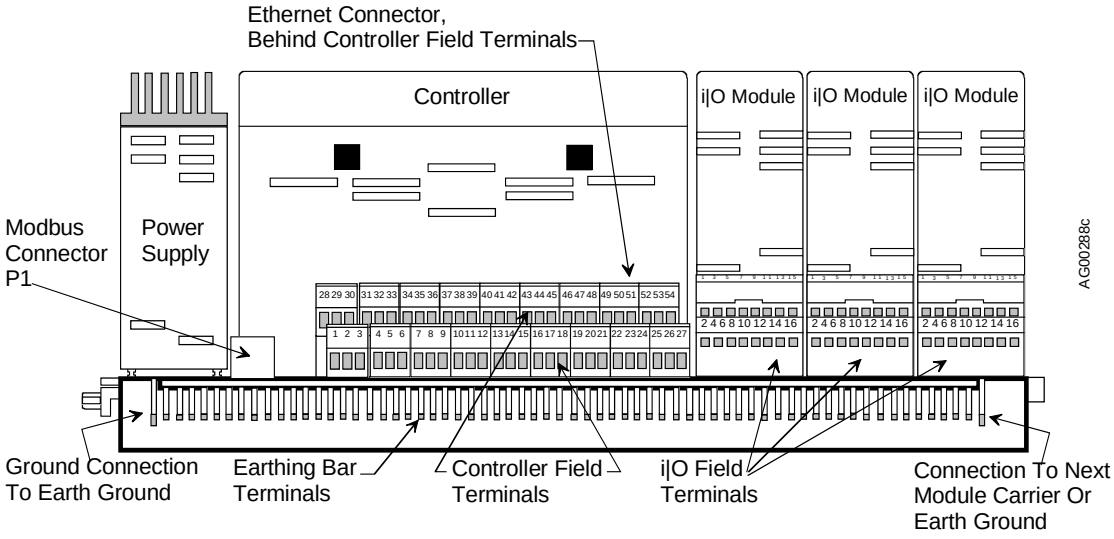

FIGURE 8-4 Assembled Control Carrier

120/240 Vac Input Wiring

Wire the supplied three-terminal connector to your electrical service. Include in the wiring a readily accessible fuse or circuit breaker that is located in a non-explosive atmosphere, unless suitable for use in an explosive atmosphere. For redundancy, the 120/240 Vac inputs to the control carrier and power supply carrier should be routed through separate circuit breakers or fuses. Strain relieve all wiring, particularly the 120/240 Vac power wiring to the control carrier and power supply carrier.

WARNING

Electrical shock hazard
Explosion hazard

Can cause death or injury

- Remove power from all wires and terminals before working on equipment.
- In potentially hazardous atmosphere, remove power from equipment before connecting or disconnecting power, signal, or other circuit.
- Observe pertinent regulations regarding installation in hazardous area.

1. Determine the cable path and the required length of cable. Install conduit as required. Install the cable and route it to the carrier.
2. Strip 3/8" (10 mm) of insulation from each wire.
3. Refer to the adjacent figure and insert the Hot, Neutral, and Ground wires in the indicated connector terminals and tighten the screws.
4. Refer to the figure below and insert the keyed connector into J10 on the control carrier. Tighten the two-connector mounting screws.

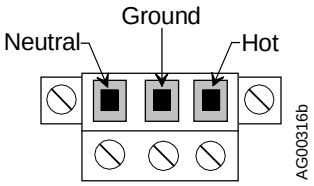

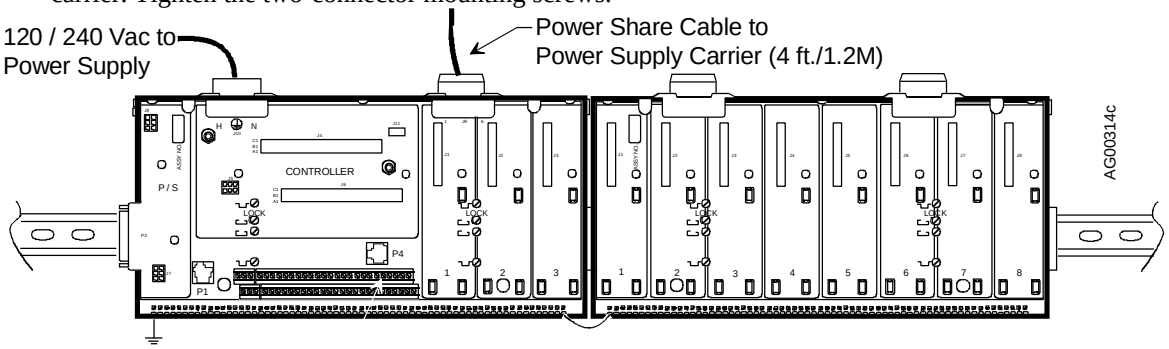

8.1.3 Specifications

Outside Dimensions..... See Figure 8-2
Flat Panel Mounting Pattern ..... See Figure 8-3
Weight ..... 5.5 lbs (2.5 kg) Includes control module and power supply; does not include i|o modules and field termination assemblies.
120/240 Vac Power Wiring ..... 18 AWG (0.96mm^2)

8.1.4 Where to Go Next

Install 4- or 8-module carrier(s) (see Section Model 8.2 iO-(4/8)MC)
Install power supply carrier (see Section 8.4 Model 353RPSCB_
Install local faceplate (see Sections 8.5 and 8.6 Model 353RFHDB_ and 353RFWMB_ respectively)
Install control module (see Section 9.1 Model 353RCM_ _ _ _B_)
Install power supply (see Section 9.2 Model 353RPSUAD_)

■

8.2 MODEL IO-(4/8)MC MODULE CARRIER INSTALLATION

This Instruction describes installation of a module carrier. Also described is wiring of bussed field power that may be required by several of the i|o modules that plug into a module carrier.

Install a module carrier at a 353R network node (i.e. control carrier). The following items can be connected to it.

- Up to 8 i|o Modules
- Bussed Field Power from Power Supply Carrier, accessory power supply, or user supplied power supply (optional)
- Carrier Extender (optional)

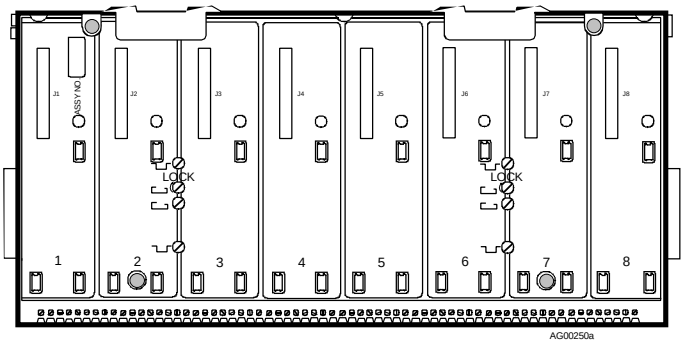

Figure 8-5 shows single and multiple row installations on DIN rail. Flat panel installations are similar. Note the use of carrier extenders in multiple row installations.

8.2.1 Install a Module Carrier

Mount the carrier on T or G-section DIN rail or a flat panel. Be sure to allow sufficient clearance around the carrier for:

- Wire duct and conduit
- Wiring to the shield earthing bar on the carrier lower edge
- Wiring to the I/O field termination assemblies
- Bussed field power wiring to the connectors on the upper/back edge of a module carrier
- Peripheral equipment such as the bus power supply

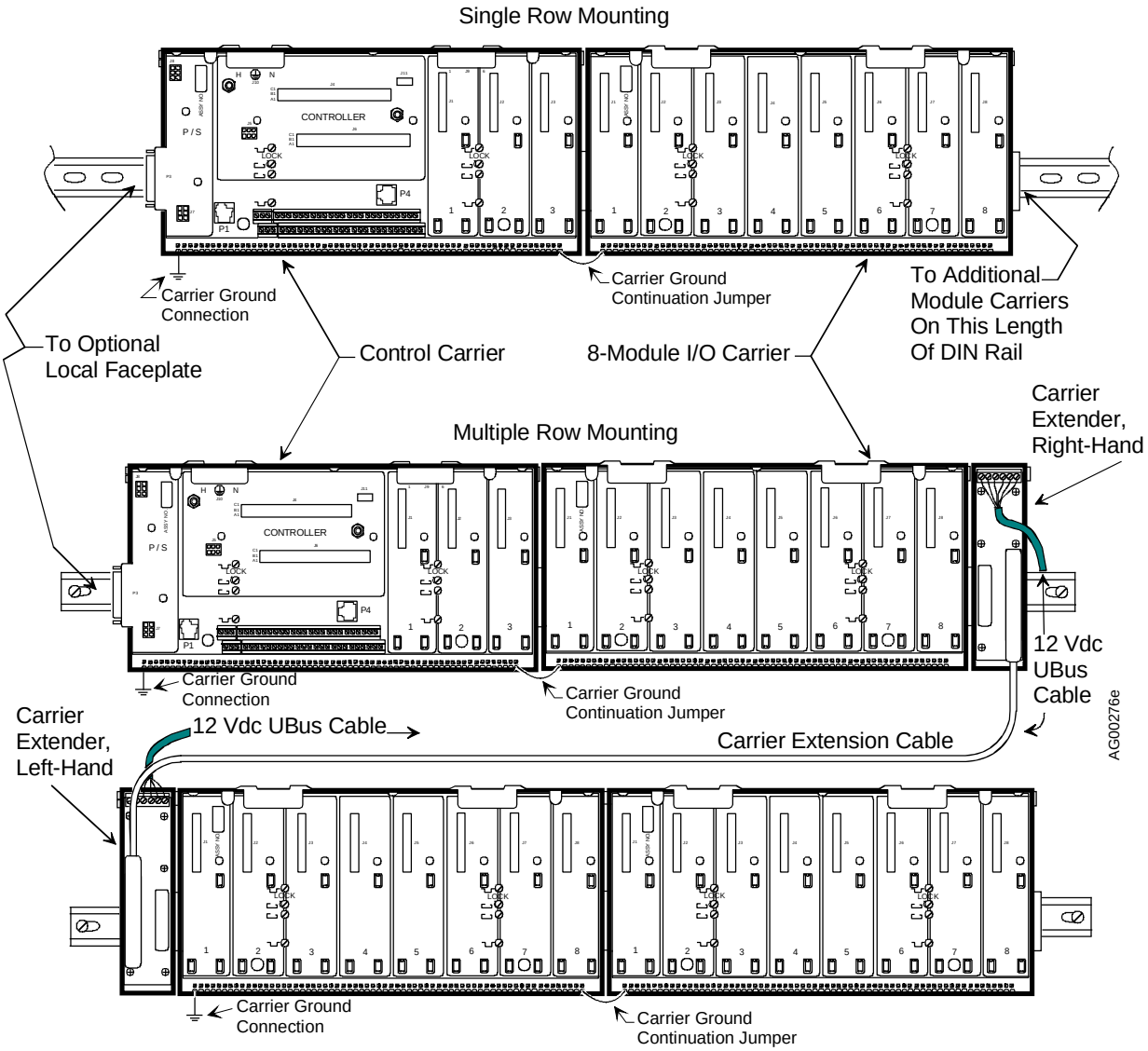

FIGURE 8-5 Single and Multiple Row Mounting

DIN Rail

Figure 8-6 shows module carrier dimensions and the location of the mounting screws with ¼ turn nuts that secure the carrier to the DIN rail. As shown by the T and G section symbols on the carrier, there are two pairs of mounting hardware for each DIN rail type.

1. Ensure that the ¼ turn nuts are retracted.
2. Locate and orient the carrier on the DIN rail.
3. Tighten the two pairs of screws for the selected DIN rail type. Maximum torque is 12 in-lb (1.32 Nm). Do not over tighten and damage the carrier.

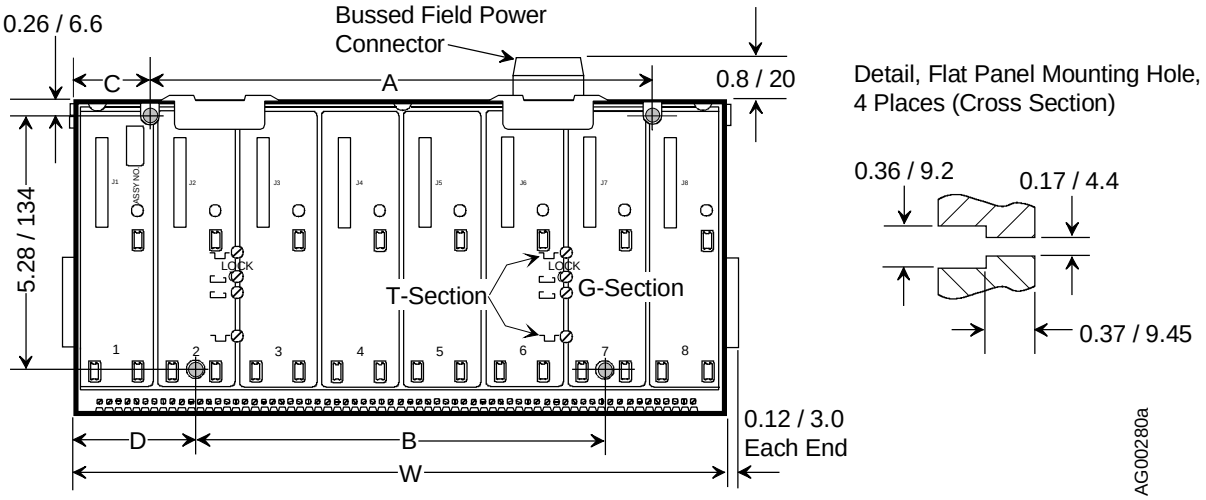

All dimensions are in inches / millimeters.
All dimensions are +/-0.01 / 0.3.

CARRIER TYPE	DIMENSIONS				
	A	B	C	D	W
8-Module	10.2 / 260	8.3 / 210	1.5 / 37.9	2.5 / 62.9	13.2 / 336
4-Module	4.1 / 105	2.5 / 63	1.2 / 31.5	2.1 / 52.5	6.8 / 172

FIGURE 8-6 Module Carrier Dimensions

Flat Panel

Carrier mounting holes must be accurately located and drilled to ensure complete carrier-to-carrier connector mating and proper carrier alignment.

1. Refer to Figure 8-6 for mounting dimensions and for the mounting hole detail.
2. Select mounting hardware appropriate to the carrier and the panel material.
3. 4-Module Carrier only: From the exposed side of the carrier circuit board, remove the four Phillips head screws securing the printed circuit board to the carrier base. Lift the lower edge (see Figure 8-6) of the circuit board until a 25°-30° angle is formed between the board and base. Carefully pull the board from the base, adjusting the angle slightly as needed to ease removal.
4. Prepare the panel as necessary and then mark and drill four carrier mounting holes. Remove any burrs and loose material from the panel surface.
5. Orient the carrier over the mounting holes and insert and tighten the selected hardware. Maximum torque is 12 in-lb (1.32 Nm). Do not over tighten and damage the carrier. When several carriers are mounted in a row, it may be desirable to loosely install all carriers to allow final alignment before tightening the mounting hardware and remounting the 4-Module Carrier board(s). Be sure carrier connectors are completely mated before marking and drilling holes.
6. 4-Module Carrier only: Reinstall the printed circuit board in the carrier base - the board should be flush with the base. Install and tighten the four screws removed above. Do not over tighten the board mounting hardware.

8.2.2 Specifications

Dimensions and Flat Panel Mounting Pattern ..... See Figure 8-6
Weight
4-Module Carrier, Fully Populated..... 6.6 lbs (3.0 kg)
8-Module Carrier, Fully Populated..... 3.3 lbs (1.5 kg)

8.2.3 Bussed Field Power To i|o Modules

Bussed field power can be provided from a power supply carrier (24 Vdc), an accessory power supply (12 or 24 Vdc) or a user-supplied power supply.

Bussed field power enables field circuit power to be available directly from the field terminals, thus a simple supply rail connection at the rear of the carrier makes power available to a range of field terminals. The system is capable of handling voltages of up to 230 Vac (nominal) to the field circuits (depending upon the i|o modules in use).

If a module's section (see Sections 9.3 through 9.22) indicates that the module requires bussed field power for the field circuit, it can be connected using the connector(s) at the rear edge of the carrier.

Each bussed field power connector can provide two independent power rails. Each rail supplies two modules (e.g. i|o1 and i|o2). In the above-right figure, the dashed lines show power distribution to the i|o modules. The second terminal for each connection enables the supply to be jumpered onward as shown in the two adjacent figures.

The 8-module carrier has two bussed field power connectors on its rear edge; the 4-module carrier has one.

Bussed Field Power Connectors, Power Distribution To Modules

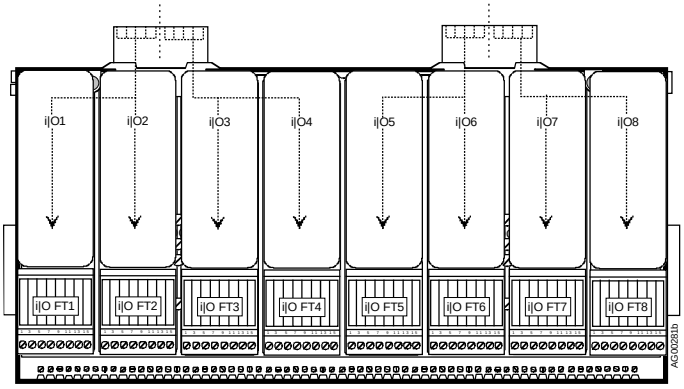

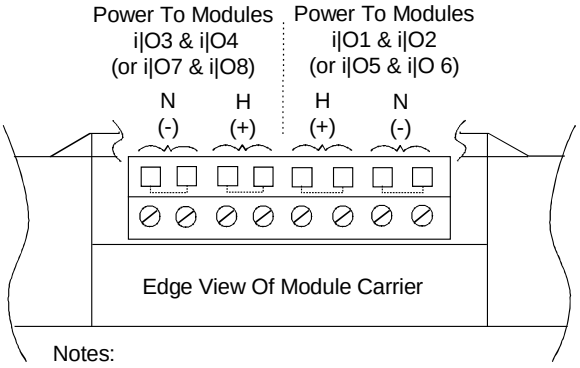

Notes:
1. i|O modules shown in parenthesis available only on 8-module carrier.
2. The four dashed lines linking adjacent terminals indicate links that exist on the circuit board.

Wiring A Single External Field Power Supply

When using a single power supply, the connector may be wired to jumper the supply to the other half of the connector, and even wire the connections to another connector on the same carrier or on an adjacent carrier.

When all four modules (e.g. i|o1 through i|o4) require the same voltage, jumper the connections as shown in the below-right figure.

The power supply may be wired to additional connectors, when the needed voltage is provided and the supply is capable of providing sufficient current.

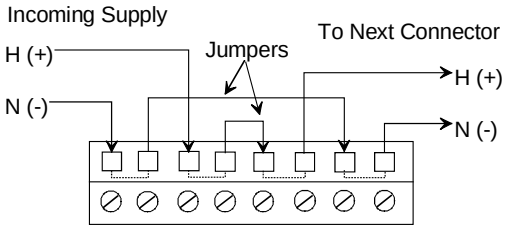

Single External Field Supply

Wiring Two External Field Power Supplies

When two supplies are wired to one connector, they can be wired to a second connector as shown below-right.

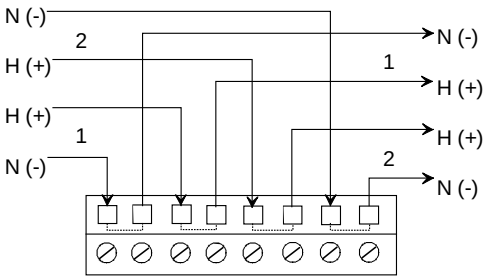

Two External Field Supplies

Connector Wiring

The connector must be wired before it is plugged into the carrier.

WARNING

Electrical shock hazard
Explosion hazard

Can cause death or injury

- Remove power from all wires and terminals before working on equipment.
- In potentially hazardous atmosphere, remove power from equipment before connecting or disconnecting power, signal, or other circuit.
- Observe pertinent regulations regarding installation in hazardous area.

1. Trim back the insulation on each conductor by 9/16" (15mm).
2. Check pin assignment.
3. Insert each conductor in turn and tighten the connector screw. Do not over tighten.

Bussed Field Power - the coding key system

A coding key system is available to prevent the interchange of Bussed Field Power plugs which carry different voltage levels. The user fits one part of the key system to the header on the carrier and the other to the free plug (see above).

Two different supplies may be required on one plug, i.e. Supply A for modules at locations i|o1 and i|o2 and Supply B for modules i|o3 and i|o4, and so the diagram above repeats the code positions on each half of the plug and header.

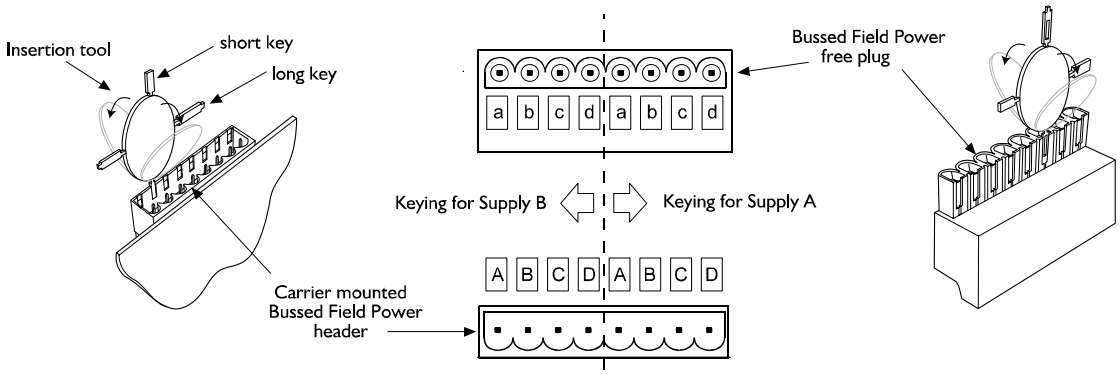

The keying code chosen by the user should uniquely identify the different voltages that will be applied to the header.

The combination of keys in the plug and socket should also be chosen to ensure that a free plug can not be plugged into the wrong header on the carrier. The plug and header will not connect if the same lettered keys are opposite each other, e.g. 'A' opposite 'a' will not allow them to connect.

As an aid, a suggested code is shown below that will uniquely identify the three most commonly used supply voltages, but bear in mind that the choice of key codes, and even the *use* of key coding altogether, is entirely at the discretion of the user.

Suggested Keying Code

BUSSED FIELD POWER SUPPLY VOLTAGE	CONNECTOR	CODE
24 Vdc	Header	A B C -
	Plug	- - - d
115 Vac	Header	A B - D
	Plug	- - c -
230 Vac	Header	A - C D
	Plug	- b - -

Note
A - C D means keys are fitted to positions A, C and D on the carrier mounted header.

Fitting Coding Keys

The coding elements are supplied on their own insertion tool ready for fitting.

- Identify the key positions for the code you have chosen.
- Using the **short keys** on the insertion tool, slide one into key slot on the PCB mounted header.
- When it is fully inserted, separate it from the insertion tool by bending the tool backwards and forwards until the key breaks away from the tool.
- Repeat the process on the free plug using the **long keys**.

8.2.4 Where to Go Next

Install carrier extenders and carrier extension cable (see Section 8.3 Model iO-(R/L)CE)
Install local faceplate (see Section 8.5 Model 353RFHDB_ or 8.6 353RFWMB_)

■

8.3 MODEL IO-(R/L)CE CARRIER EXTENDER INSTALLATION

This section describes the installation of right-hand and left-hand carrier extenders, the 12V Ubus cable, and the carrier extension cable. Figure 8-7 shows the use of these items in a multiple row configuration. They serve to interconnect adjacent rows by plugging into the carrier (control or module) at the end of one row and into the carrier at the start of the next row. Typically, extenders are not used in single row mounting installations.

The carrier extension cable is available in two lengths: 33" (0.85m) and 47" (1.2m). Be sure to consider these lengths when determining the locations of control and module carriers.

The carrier extension cable carries Ubus signal information. To carry Ubus 12 Vdc from one row to another, a 12 Vdc Ubus cable is fabricated by the installer. The source of the 12 Vdc is the power supply on the control carrier. Although, a large number of analog i|o modules can require either a power supply carrier with up to three additional power supplies or an external accessory 12 Vdc power supply to power a portion of the analog modules, as described later in this section.

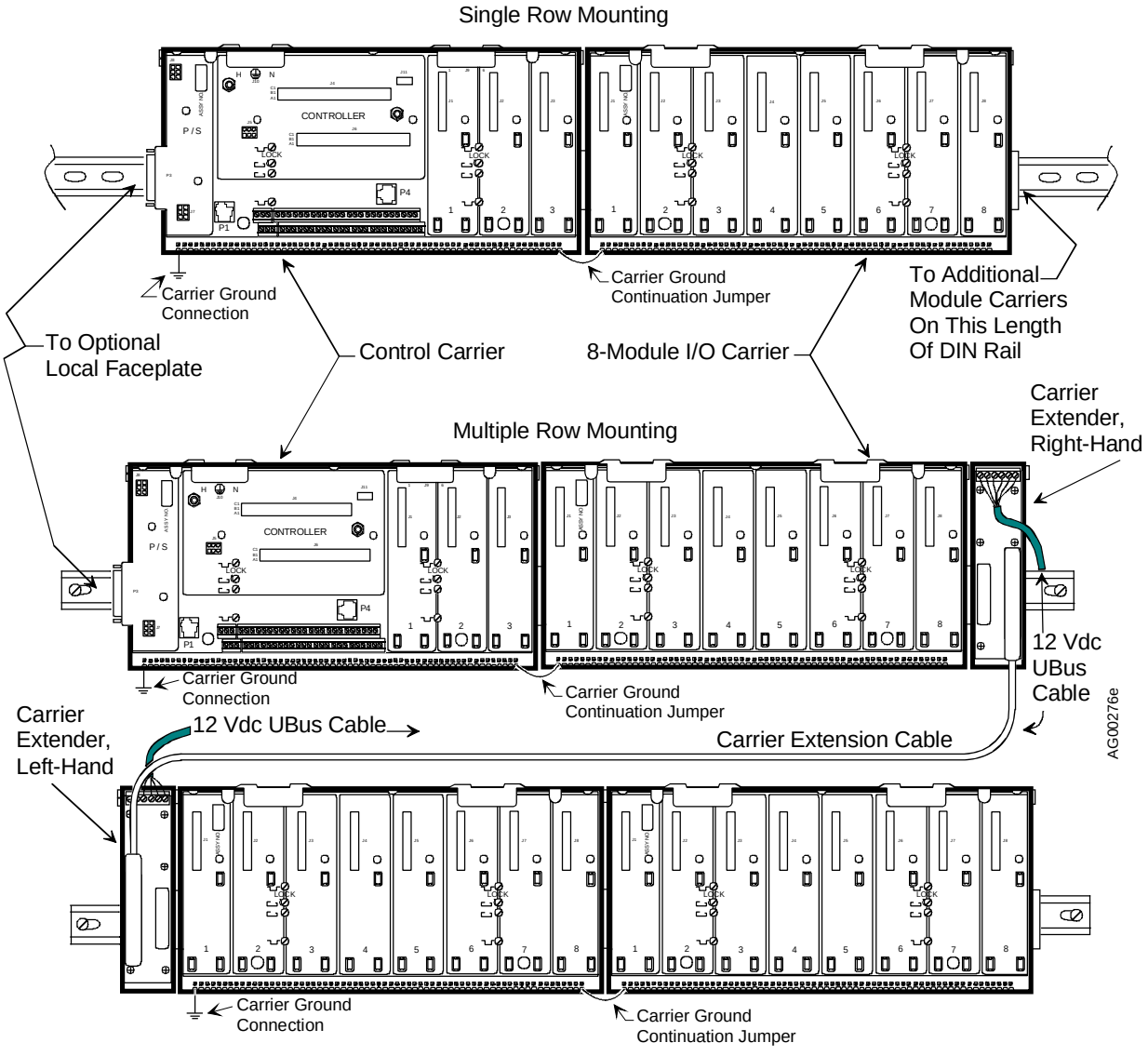

FIGURE 8-7 Carrier Extender Mounting and Cabling

8.3.1 Installation

A carrier extender plugs directly into a control or module carrier. It is mounted in a similar manner as the carrier into which it is plugged (i.e. DIN rail or flat panel). Carrier extender physical dimensions are shown in Figure 8-8. The carrier extension cable is connected between a right-hand extender and a left-hand extender, as shown in Figure 8-7.

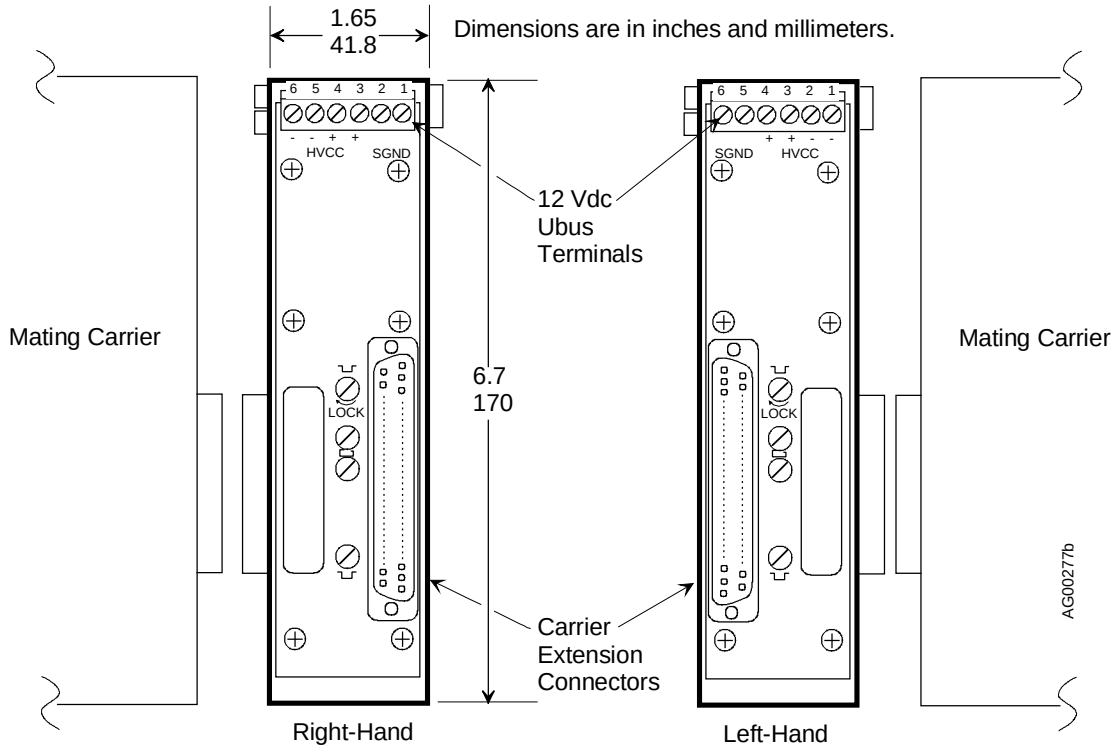

FIGURE 8-8 Carrier Extender Dimensions

Flat Panel Mounting

1. Plug the carrier extender into the carrier. Refer to Figure 8-7. The connector seating force and the keys at the ends of the carrier and extender are sufficient to ensure a secure physical and electrical connection. A carrier extender does not fasten to the flat panel.
2. Plug the carrier extension cable into each carrier extender.

DIN Rail

Figure 8-8 shows the location of the mounting screws with ¼ turn nuts that secure the carrier extender to the DIN rail. As shown by the symbols on the carrier extender, there are two pairs of mounting hardware for each DIN rail type. One pair is for G-type DIN rail and one for T-type.

1. Ensure that the ¼-turn nuts are retracted by rotating the screws shown in Figure 8-8 counterclockwise.
2. Locate and orient the carrier extender on the DIN rail and plug the extender into the adjacent carrier. Refer to Figure 8-7 as necessary.
3. Tighten the two pairs of screws for the selected DIN rail type. Maximum torque is 12 in-lb (1.32 Nm). Note that the screws may require more than ¼ of a turn to tighten the nut against the DIN rail sufficiently. Do not over tighten and damage the carrier extender.

8.3.2 12 Vdc Ubus Cable

This cable carries the Ubus 12 Vdc from the right-hand carrier extender to the left-hand extender as shown in Figure 8-7. Figure 8-8 shows the 6-terminal connector on each carrier extender. Cable connections are shown in the wiring diagram below. The Ubus cable is not installed when an accessory (external) 12 Vdc power supply is used to power the modules connected to the left-hand carrier extender, as shown in Appendix C.

WARNING



Electrical shock hazard

Hazardous voltage can cause death or serious injury.

Remove power from all wires and terminals before working on this equipment.

1. Determine the required length of 12-14 AWG (2.5 mm^2), 6-conductor cable and strip ¼" (6 mm) of insulation from each end of each wire.
2. Identify right and left-hand extenders and check terminal numbering.
3. Insert each conductor according to the adjacent figure.
4. Tighten each terminal screw. Do not over tighten.

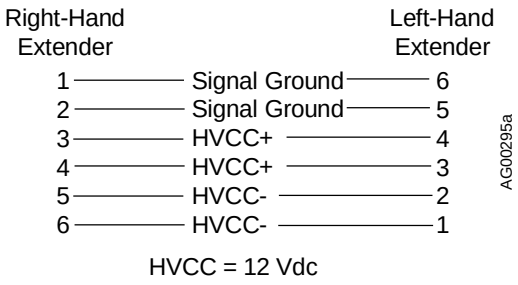

8.3.3 External 12 Vdc Power Supply

The current required by a large number of analog i|o modules can exceed the current rating of the single power supply on the control carrier. (See Appendix B - Determining Current Demand to determine system current demand.) Additional power supply capacity can be acquired by installing a power supply carrier and up to three power supply modules. See Section 8.4 Model 353RPSCB_ for more information.

Another approach is to install an accessory power supply. The accessory 12 Vdc power supply is listed under Accessories, General in Table 15-1 Model Designations in Section 15 Model Designations and System Specifications. Install this supply and the right and left-hand carrier extenders, as shown below. Wire the power supply to the terminal strip on the left-hand carrier extender. It then powers the modules on the module carrier to the right and on subsequent carriers. Refer to Appendix C - Accessory Power Supplies for additional information.

8.3.4 Where to Go Next

Install a Power Supply Carrier (see Section 8.4 Model 353RPSCB_)
Install Local Faceplate (see Section 8.5 Model 353RFHDB_ or 8.6 353RFWMB_)
Install Control Module (see Section 9.1 Model 353RCM_ _ _ _B_)

■

8.4 MODEL 353RPSCB_ POWER SUPPLY CARRIER INSTALLATION

This section describes installation of the i|power™ power supply carrier. Install the carrier on a flat panel at a 353R network node (i.e. control carrier). Figure 8-9 shows the power supply carrier and typical cabling. The carrier is not intended for DIN rail mounting.

The following are connected to the power supply carrier.

- User's 120/240 Vac electrical service - refer to Section 9.2 Model 353RPSUAD_ for specifications
- Power Share cable - length 4 ft./1.2M, supplied with carrier
- 24 Vdc Bussed Field Power to module carriers and related field devices (e.g. transmitters) for a single 353R system - optional, user-constructed cable, need depends upon the i|o modules installed
- Up to 3 power supply modules; module blanking kit for each unused power supply location, Model iO-MBK

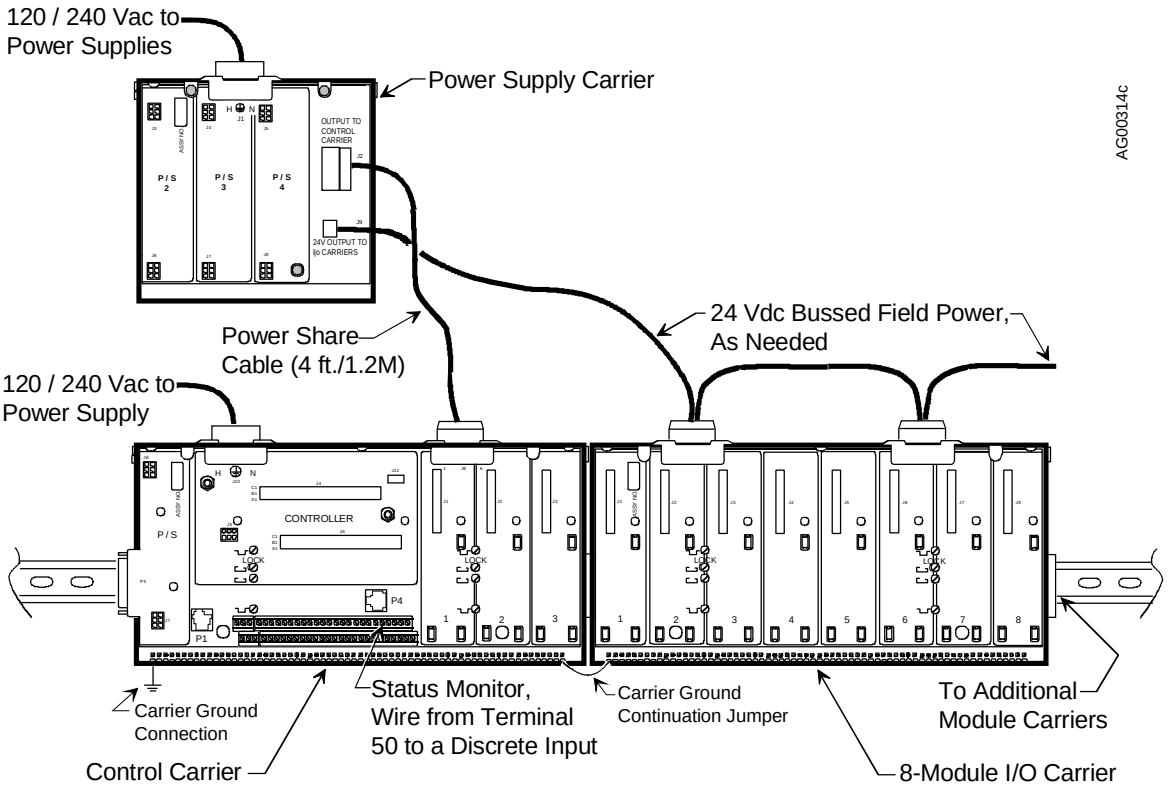

FIGURE 8-9 Power Supply Carrier and Cabling

8.4.1 Install the Power Supply Carrier

Mount a power supply carrier on a flat, rigid panel. Power supplies must be removed to mount the carrier. DO NOT insert the power supply carrier between a control carrier and a module carrier or between two module carriers. Ubus i|o signals are not carried across the power supply carrier and Ubus communications will be interrupted.

Be sure to allow sufficient clearance around the carrier for:

- Conduit and wire duct
- Circulation of cooling air around the power supply's finned heat sinks
- Access for installation and servicing

Carrier mounting holes must be accurately located and drilled to ensure they align with carrier mounting holes.

1. Select a mounting location for the power supply carrier that is near the control carrier. Refer to Figure 8-9 for carrier interconnections. Power share cable length is 4 ft/1.2M. Be sure that it will interconnect the power supply and control carriers.
2. Refer to Figure 8-10 for mounting dimensions and for the mounting hole detail.
3. Select mounting hardware appropriate to the carrier and the panel material.
4. Prepare the panel as necessary and then mark and drill three carrier mounting holes. Remove any burrs and loose material from the panel surface.
5. Orient the carrier over the mounting holes and insert and tighten the selected hardware. Maximum torque is 12 in-lb (1.32 Nm). Do not over tighten and damage the carrier.
6. Install a Model iO-MBK module blanking kit over each module location that will not receive a power supply. Refer to Section 2 Getting Started for a procedure.

8.4.2 Specifications

Dimensions and Flat Panel Mounting Pattern ..... See Figure 8-10
Weight, with 3 Power Supply Modules ..... 5 lbs (2.3 kg)
120/240 Vac Power Wiring ..... 18 AWG (0.96 mm^2)
24 Vdc Bussed Field Power Wiring ..... 18 AWG (0.96 mm^2)

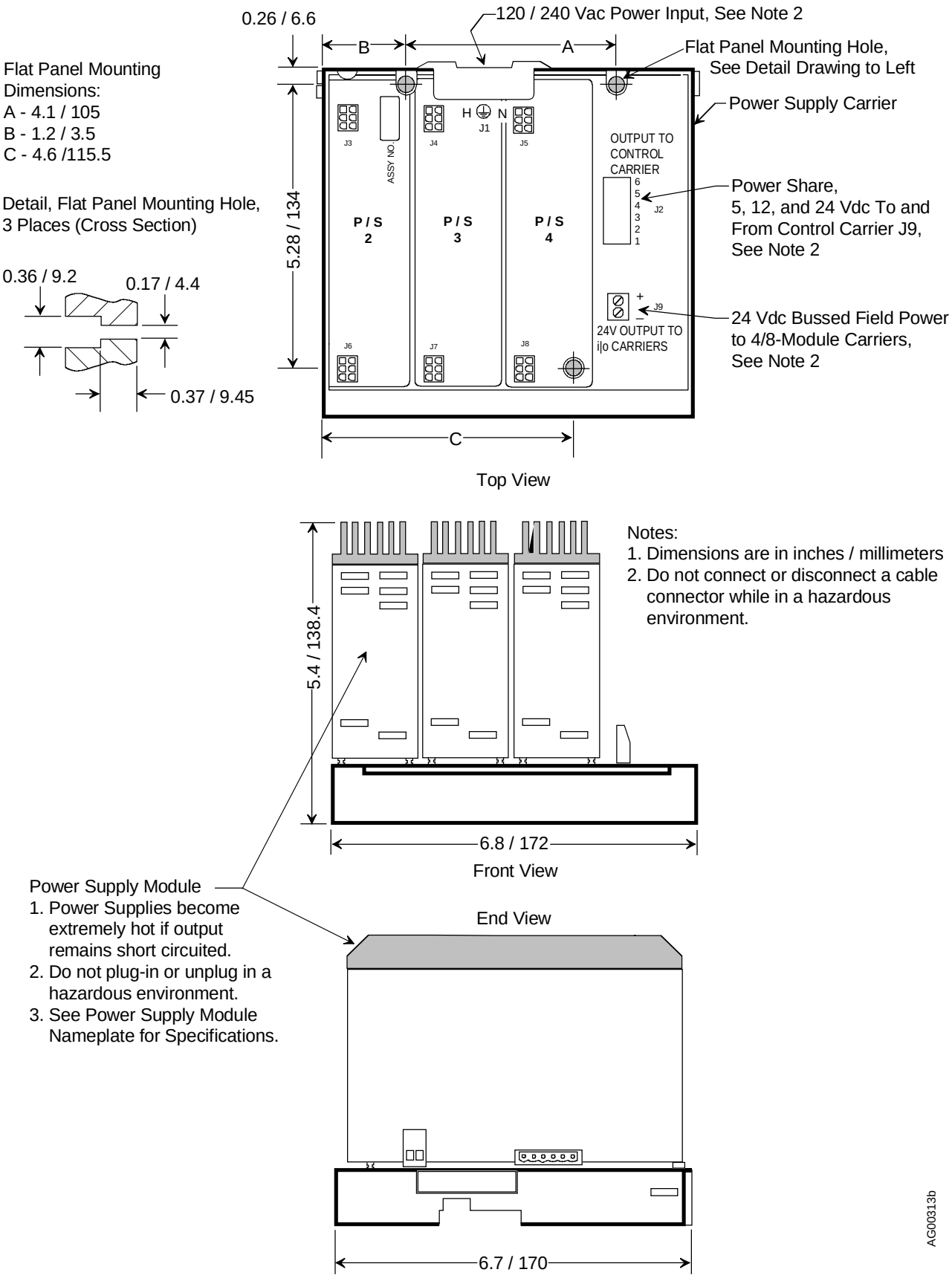

FIGURE 8-10 Installation Dimensions and Connections

8.4.3 Power Supply Carrier Wiring

Four connections are typically needed: a power share cable, a status monitor wire, a bussed field power cable, and a 120/240 Vac power cable.

WARNING



Electrical shock hazard

Hazardous voltage can cause death or serious injury.

Remove power from all wires and terminals before working on this equipment.

NOTE

Strain relieve all wiring, particularly the 120/240 Vac power wiring to the control carrier and power supply carrier.

8.4.3.1 Install the Power Share Cable

This required cable is supplied. It carries 5, 12, and 24 Vdc bi-directionally between the power supplies on the control carrier and the power supply carrier, allowing sharing of the current load imposed by the controller, controller I/O, i|o modules, and field devices.

1. Remove 120/240 Vac power input from the control and power supply carriers.
2. Connect the cable to J2 on the power supply carrier. Connect the free end of the cable to J9 on the control carrier.
3. If status monitoring is to be enabled, proceed to the next section. If not, proceed to 120/240 Vac Input Wiring section. Status monitoring is recommended.

8.4.3.2 Status Monitor Wiring

Monitor power supply system status on the HMI. A Fail display indicates the need for servicing the i|power supply system. Connect the “Fail” status line to a discrete input and configure that function block’s output to a discrete value that is displayed on the i|station HMI (e.g. a User Status on an ODC function block) or a controller relay output. The relay output can be used to activate a local indicator such as a light or buzzer. A typical circuit using function block DIN1 is shown at right.

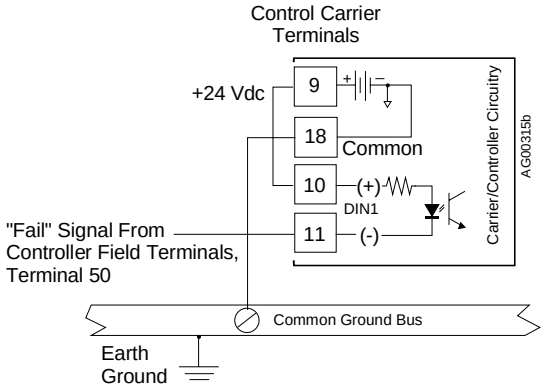

1. Select a discrete input. Either a controller discrete input or an i|o discrete input may be used. Note the input terminal locations and numbers.
2. Remove 120/240 Vac power input from the control and power supply carriers.
3. Connect a wire from a +24 Vdc source to the discrete (+) input. Remove 9/16" (15 mm) insulation from each end of the wire. Insert the wire in the selected terminals and tighten the wire clamp screws. Be sure that all wires at these terminals are adequately clamped when the screws are tightened.
4. Connect the Fail signal at terminal 50 of the controller field terminals on the control carrier to the function block’s (-) input. Remove 9/16" (15 mm) insulation from each end of the wire. Insert the wire in terminal 50 and in the discrete input (-) terminals and tighten the wire clamp screws. Be sure that all wires at these terminals are adequately clamped when the screws are tightened.
5. Be certain to configure the discrete input function block.

8.4.3.3 24 Vdc Bussed Field Power Wiring

This user-fabricated cable connects J9 on the power supply carrier to the bussed field power connectors on one or more 4/8-module carriers to power 24 Vdc modules that require bussed field power (e.g. iO-8DI24DMN). To power specific pairs of i|o modules, refer to Section 8.2.3 Bussed Field Power To i|o Modules for carrier connections.

1. Trim back the insulation on each conductor by 3/16" (5mm).
2. Insert each conductor in the appropriate terminal in connector J9 and tighten the wire clamping screws. Do not over tighten.
3. Route the conductors to a bussed field power connector on a module carrier or to a field device that is to be powered from this power source.

8.4.3.4 120/240 Vac Input Wiring

Wire the supplied three-terminal connector to your electrical service. Connect power wiring to a readily accessible fuse or circuit breaker that is located in a non-explosive atmosphere, unless the circuit is suitable for use in an explosive atmosphere. For redundancy, the 120/240 Vac inputs to the control carrier and power supply carrier should be connected to separate circuit breakers or fuses.

1. Determine the cable path and the required length of cable. Install conduit as required. Install the cable and route it to the carrier.
2. Strip 3/8" (10 mm) of insulation from each wire.
3. Refer to the adjacent figure and insert the Hot, Neutral, and Ground wires in the indicated connector terminals and tighten the screws.
4. Insert the keyed connector into J10 on the control carrier. Tighten the two-connector mounting screws.

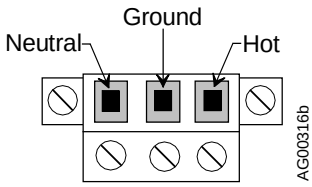

8.4.4 Installing Power Supply Modules

Up to three Model 353RPSUAD_ power supply modules may be installed on the carrier. When fewer than three supplies are installed, the supplies may be installed in any location. See Section 9.2 Model 353RPSUAD_ for power supply module installation.

IMPORTANT

All power supply modules installed on a control carrier and power supply carrier must be the same design level.

8.4.5 Where to Go Next

Install an optional Local Faceplate (see Section 8.5 Model 353R-FHA or 8.6 353RFWMB_)
Install Control Module (see Section 9.1 Model 353RCM_ _ _ _B_)

■

8.5 MODEL 353RFHDB_ LOCAL FACEPLATE INSTALLATION

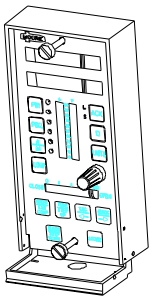

This section describes the installation of the Local Faceplate and its connection to the Control Carrier (see Figure 8-11). The faceplate can be operated as a hand-held device or mounted in a panel cutout.

To mount this faceplate to a flat surface or to a DIN rail, a Wall/DIN Mounting Kit is needed. An installation instruction is provided in the kit. See Section 15 Model Designations and System Specifications for the kit part number.

WARNING

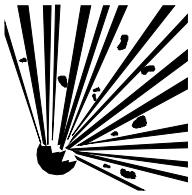

Explosion hazard

Explosion can cause death or serious injury.

In a potentially explosive atmosphere, remove power from the equipment before connecting or disconnecting power, signal, or other circuits.

8.5.1 Kit Contents

DESCRIPTION	QUANTITY
8-32 X 0.375" Binding Head SS	1
8-32 x 1" Fillister Head Mounting Clip Screw	2
Mounting Clip	2
Identification Card	1
Local Faceplate with Housing	1
6-foot (1.8m) Local Display Cable	1

8.5.2 Installation

Hand-Held Operation

Connect the remote display cable to the Local Faceplate connector and to the 15-pin connector on the Control Carrier.

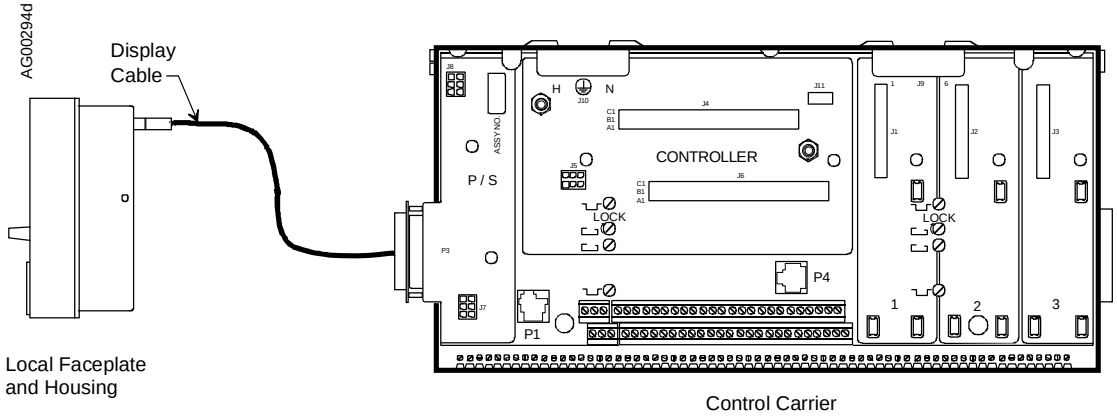

FIGURE 8-11 Local Faceplate Connection to Control Carrier

THROUGH THE PANEL MOUNTING

1. See Figure 8-12 for Faceplate dimensions. Carefully prepare the panel cutout. See Figure 8-13.
2. Thread the mounting screws into the mounting clips. See Figure 8-14.
3. From the panel front, insert the local faceplate into the panel cutout. If a watertight seal is needed, apply a bead of sealant to the flange before insertion.
4. From the panel back, slightly rotate the top mounting clip to fit it into the housing cutout. Then straighten the clip and partially tighten the mounting screw. Insert, straighten and partially tighten the bottom clip.
5. Square the faceplate with the panel and alternately tighten top and bottom mounting clip screws until the faceplate is secured to the panel. Do not over tighten and distort the faceplate.
6. Connect the display cable to the faceplate connector and to the 15-pin connector on the control carrier.

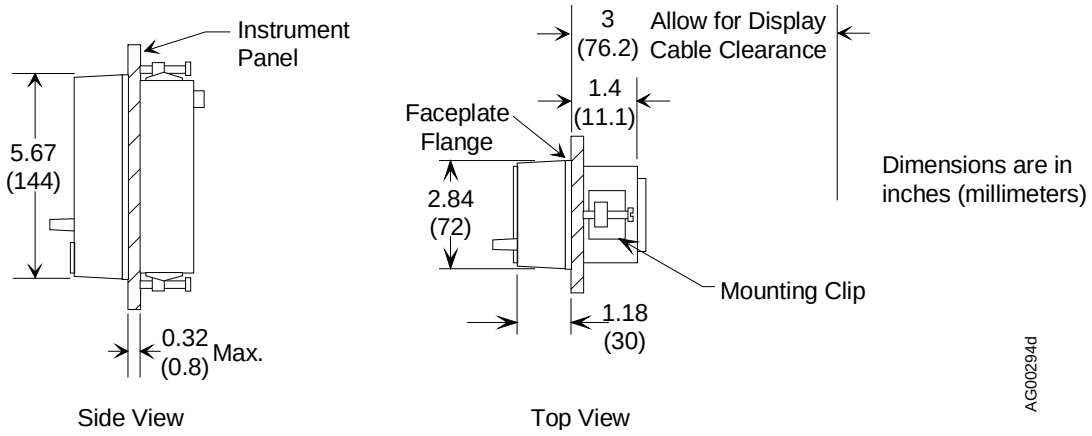

FIGURE 8-12 Faceplate Dimensions

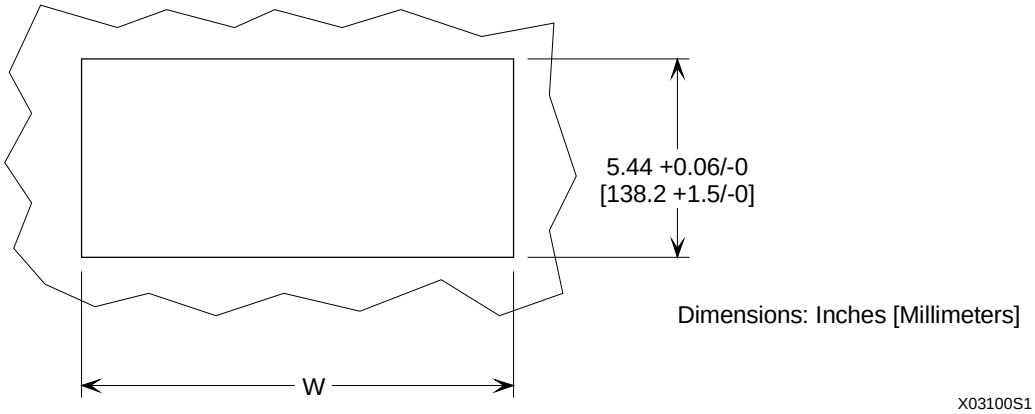

Panel Cutout Dimensions: Tolerances +0.06/-0 [+1.5/-0]
Height = 5.44 [138.2]
Width = (2.84 X A) - 0.16 inches
[(72.0 X A) - 4.1] mm

Where: A= Number of 353 Stations and 353R or i|pac Faceplates

FIGURE 8-13 Faceplate Display Cutout Dimensions

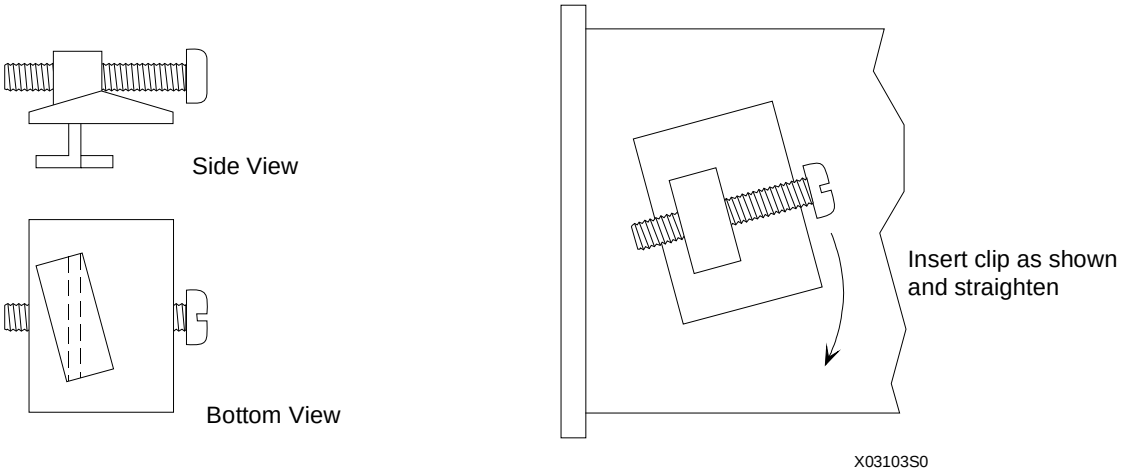

FIGURE 8-14 Mounting Clip

■

8.6 MODEL 353RFWMB_ LOCAL FACEPLATE INSTALLATION

This section describes the installation of the Local Faceplate and its connection to the Control Carrier (see Figure 8-15 below). The faceplate can be mounted on a flat panel surface or fastened to a DIN rail.

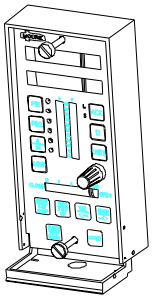

8.6.1 Kit Contents

DESCRIPTION	QUANTITY
Local Faceplate and Housing	1
Identification Card	1
6-foot (1.8m) Local Display Cable	1
8-32 x 1.33 Phillips Pan Head	2
DIN-Rail Clip	1
Wall/DIN Display Bracket	1

8.6.2 Installation

The installation must be structurally rigid and allow sufficient access to the installed faceplate for reading the displays and manipulating the pushbuttons and pulser knob. Figure 8-15 shows the faceplate to control carrier connection. The Wall/DIN-Rail Bracket is mounted first and the cable connected to the control carrier. Next, the cable is routed through the Bracket and connected to the faceplate. The faceplate is then fastened to the Bracket.

WARNING

Explosion hazard

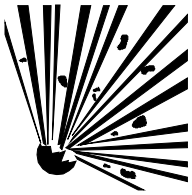

Explosion can cause death or serious injury.

In a potentially explosive atmosphere, remove power from the equipment before connecting or disconnecting power, signal, or other circuits.

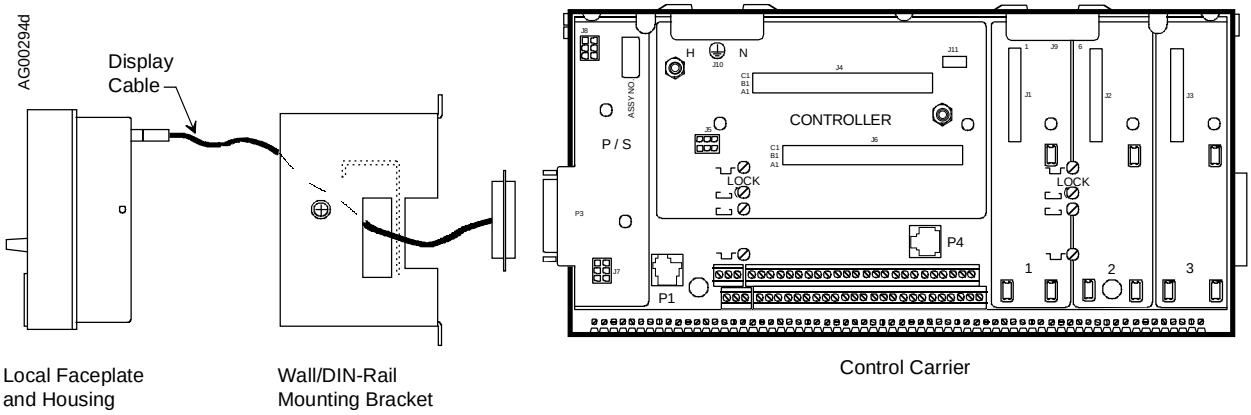

FIGURE 8-15 Local Faceplate Connection to Control Carrier

DIN-Rail Mounting

1. Refer to Figure 8-16 and snap the DIN-Rail Clip onto the G- or T-section DIN-rail.
2. Place the Wall/DIN Display Bracket over the DIN-Rail Clip and align the holes in the Bracket with the Clip. Use the supplied screws to secure the Bracket to the Clip.
3. Refer to Figure 8-15 and connect the remote display cable to the Control Carrier connector.
4. Route the cable into the Bracket through the Display Cable Cutout. Connect the free end of the cable to the Faceplate connector. Do not connect or disconnect in a hazardous area.
5. If the local faceplate is to be used as a hand-held device, hold the faceplate close to the Bracket and dress the cable loop so it extends from the cutout in the bottom of the Bracket as shown in Figure 8-16. Now, insert the faceplate into the Bracket and tighten the captive screw and the side of the Bracket.
6. If the Local Faceplate is to be used fastened to the Bracket, hold the Faceplate close to the Bracket and coil the excess cable inside the Bracket. Temporarily disconnect the cable from the faceplate if necessary. Reconnect the cable and press the faceplate into the bracket. Tighten the captive screw on the side of the bracket.

NOTE

To remove the Bracket from the DIN-rail, free the Bracket by removing two screws securing the Bracket to the Clip. Then unsnap the Clip from the rail.

Flat Surface Mounting

1. Refer to Figure 8-16 and prepare the mounting surface as necessary.
2. Fasten the Wall/DIN-Rail Bracket to the surface with user-supplied hardware.
3. Refer to Figure 8-15 and connect the remote display cable to the Control Carrier connector.
4. Route the cable into the Bracket through the Display Cable Cutout. Connect the free end of the cable to the Faceplate connector. Do not connect or disconnect in a hazardous area.
5. If the local faceplate is to be used as a hand-held device, hold the faceplate close to the Bracket and dress the cable loop so it extends from the cutout in the bottom of the Bracket as shown in Figure 8-16. Now, insert the faceplate into the Bracket and tighten the captive screw and the side of the Bracket.
6. If the Local Faceplate is to be used fastened to the Bracket, hold the Faceplate close to the Bracket and coil the excess cable inside the Bracket. Temporarily disconnect the cable from the faceplate if necessary. Reconnect the cable and press the faceplate into the bracket. Tighten the captive screw on the side of the bracket.

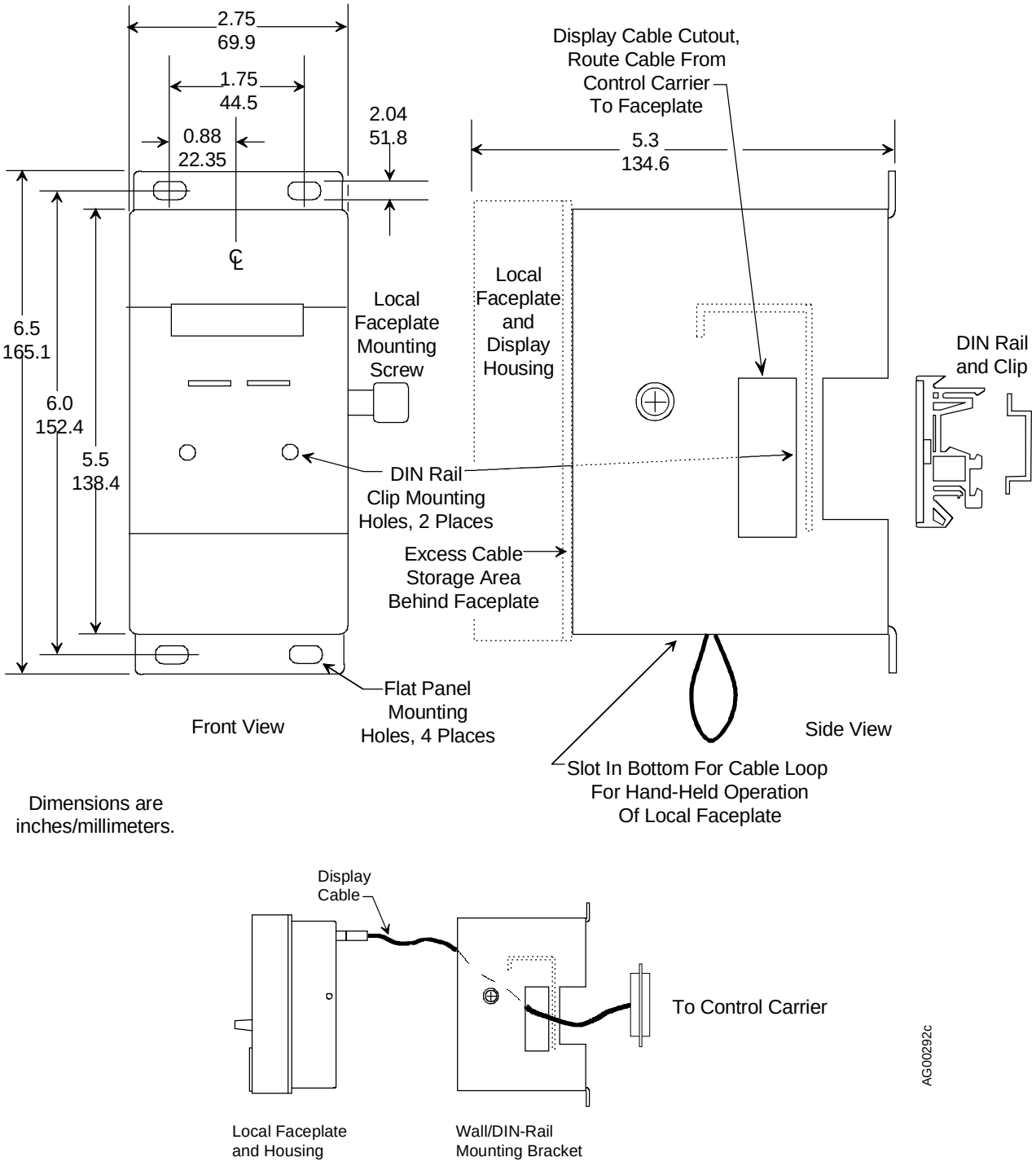

FIGURE 8-16 Local Faceplate and Wall/DIN-Rail Bracket Dimensions

■

9.0 MODULE FIELD WIRING AND SPECIFICATIONS

This section provides procedures and wiring diagrams for the mounting and wiring of control module, power modules, and i|o modules and field termination assemblies. It also has specifications for each module.

Section 9.1 describes mounting and wiring the control module. Power supply module mounting is discussed in Section 9.2. Sections 9.3 through 9.22 furnish mounting and wiring information for the i|o modules and field termination assemblies.

Installer Supplied Materials

- Common hand tools for installing electronic assemblies and components; a torque wrench (in-lbs/Nm) is recommended
- Wire and cable suitable for the intended voltages, currents, and environmental conditions; see the current revision of the National Electrical Code and other applicable national and local codes
- Wire preparation tools (e.g. insulation stripper, solderless terminals/connectors, terminal crimp tool recommended by the terminal/connector manufacturer)
- Service Kit with anti-static wrist strap and static dissipative mat for protecting electronic assemblies and circuit boards from electrostatic discharge (ESD)

IMPORTANT

A properly grounded anti-static wrist strap must be worn whenever a circuit board is handled for any reason.



9.1 MODEL 353RCM_ _ _ _B_ CONTROL MODULE

This section is for the 353R Control Module (Controller). It includes module installation steps, wiring drawings and procedures for connecting field I/O to the two rows of controller field terminals on the control carrier, and control module specifications. Shown below is a control carrier with a full complement of modules. See Section 8.1 to install the bare control carrier on a DIN rail or flat panel. The assemblies block access to mounting hardware and holes.

9.1.1 Mount the Control Module Assembly



1. Place a properly grounded anti-static wrist strap on your wrist to protect the circuit board assemblies from electrostatic discharge.
2. Find the control module assembly (Controller) shown in Figure 9-1 and two 5" (127 mm) screws.
3. Orient the enclosure on the control carrier and carefully push down on the assembly cover to seat the connectors. Do not use excessive force.
4. Remove the assembly cover by pressing in on the square cover buttons and pivoting the cover toward the back of the assembly.
5. Firmly seat the MPU Controller board and, if installed, I/O Expander board. Do not use excessive force. See Figure 9-2 for board location. Set MPU Controller board jumpers W2 and W8. Refer to Figure 9-3.
6. Install the cover. Insert the two thin rectangular tabs on the controller cover into the thin rectangular cutouts in the metal enclosure. Pivot the cover onto the enclosure until the square buttons mate with the square cutouts in the metal enclosure.
7. Insert and tighten two 5" (127 mm) cover screws. Do not over tighten
8. Remove the wrist strap.

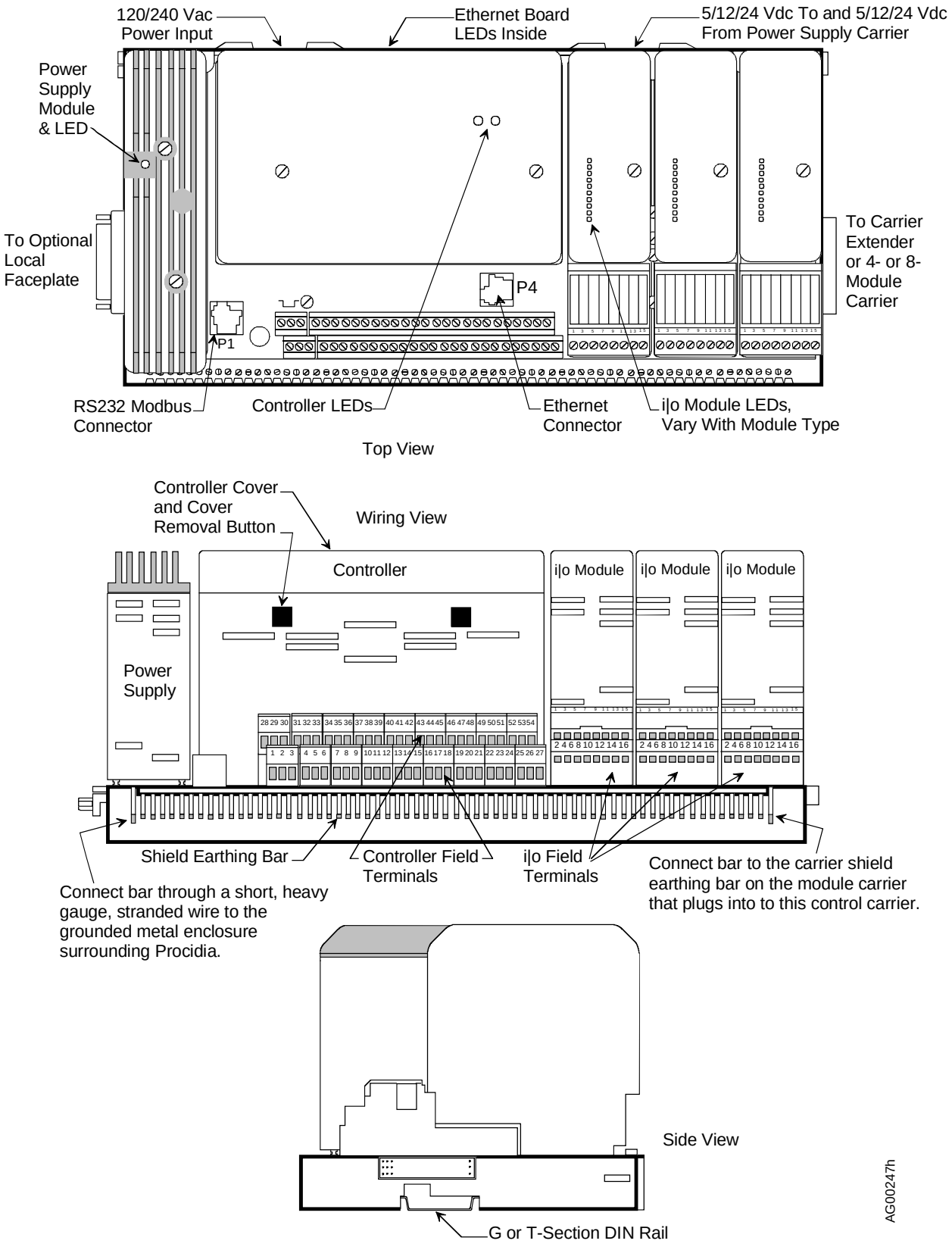

FIGURE 9-1 Assembled Control Carrier

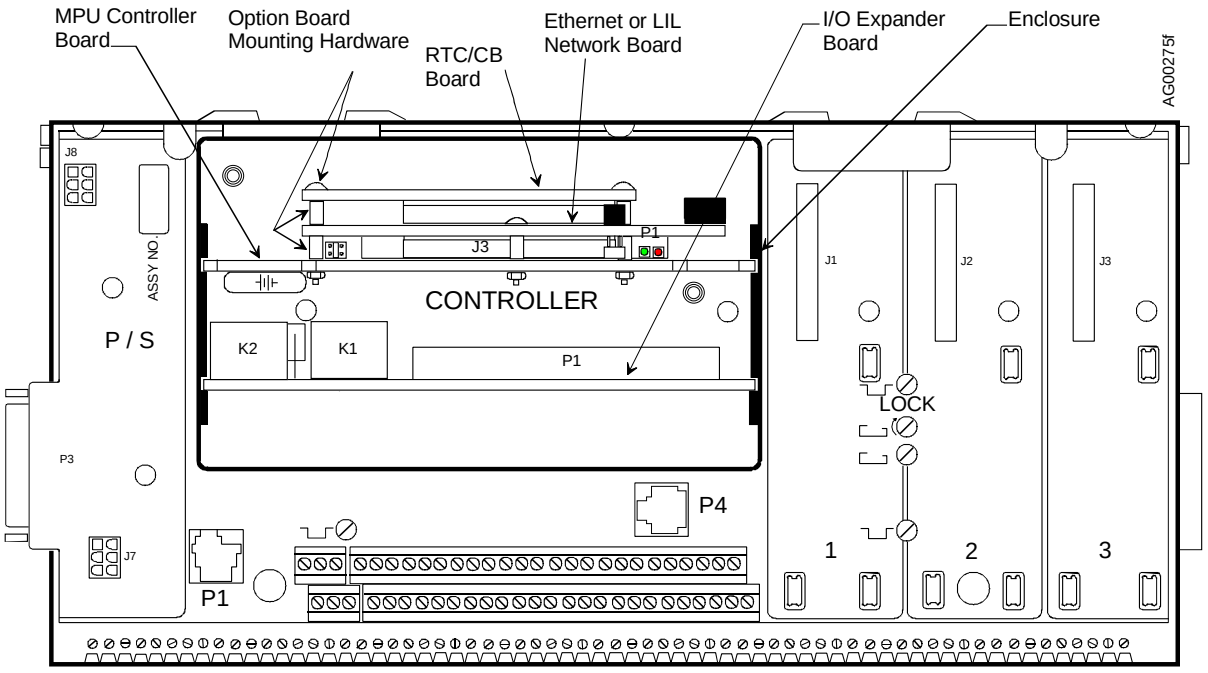

FIGURE 9-2 Controller Module, Circuit Board Locations

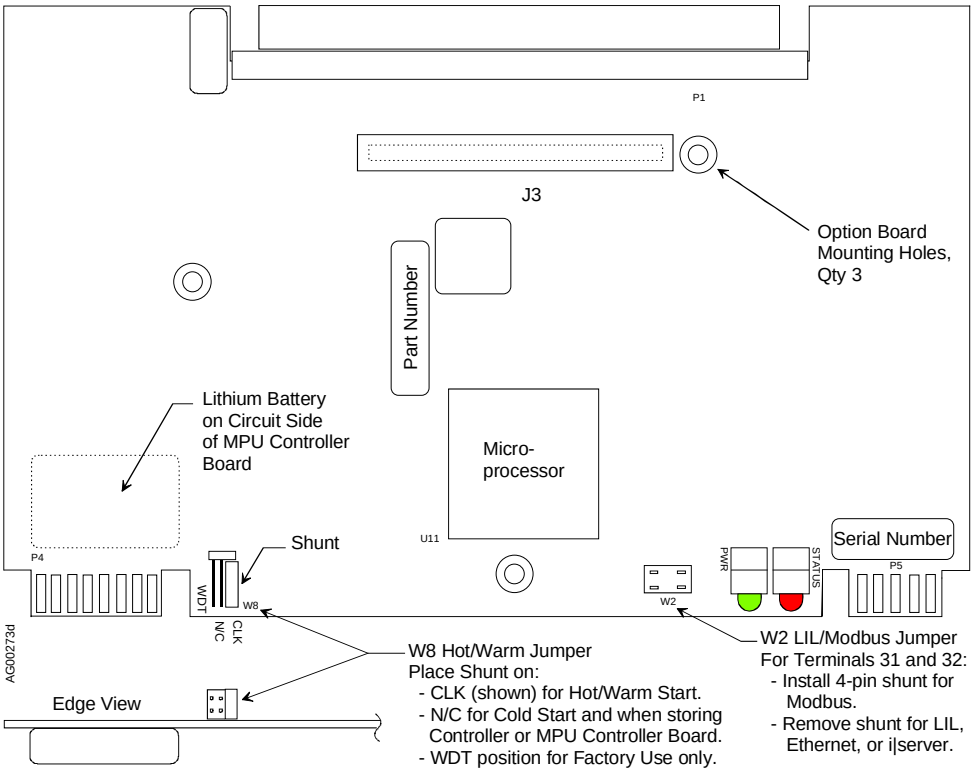

FIGURE 9-3 MPU Controller Board, Setting Installation Jumpers

9.1.2 Wiring Terminations and Guidelines

Table 9-4 Control Module Field Terminal Assignments shows the controller field terminals located on the control carrier. It also lists each terminal providing a description, location (which control module board the circuit is on), the function block ID and the terminal number. Following the table is a list of wiring considerations that applies to the 54 two-tier controller field terminals and to the 66 shield earthing bar terminals along the edge of the control carrier. These considerations should be carefully read before beginning to wire 353R.

WARNING



Electrical shock hazard
Explosion hazard

Can cause death or injury

- Remove power from all wires and terminals before working on equipment.
- In potentially hazardous atmosphere, remove power from equipment before connecting or disconnecting power, signal, or other circuit.
- Observe pertinent regulations regarding installation in hazardous area.



NOTE

Strain relieve all wiring, particularly the 120/240 Vac power wiring to the control carrier and power supply carrier.

Control Module Electrical Connections – Control module I/O and network connections are completed through four controller field terminals on the control carrier. Individual terminals are identified in Table 9-4 on the preceding page.

Connectors - Signal I/O terminals are identified by a number: 1 through 54. A connector terminal will accept the following wire(s).

- one 14-22 AWG (2.1-0.38 mm^2)
- two 16 AWG (1.3 mm^2)
- three 18 AWG (0.96 mm^2)

Wire and Cable Selection – Refer to the following table. Carefully select wire type, size, conductor material, and insulation. Use supply wires suitable for 5°C (10°F) above ambient temperature.

Wire and Cable Types	General Considerations
• Use twisted-pair shielded cable for control module I/O and Ubus i|o signal wiring. • Use a communication cable type recommended in this section for a LIL or Modbus network. • Signal and power wiring should be 18 AWG (0.96 mm^2) minimum. • Use stranded wire for most connections; solid wire is typically used for thermocouple extension wire.	• wire current and voltage ratings • total length of each wire run • whether wire will be bundled or run singly • indoor or outdoor installation • temperature extremes • exposure to sunlight • vibration • types of contaminates

Wire Stripping Recommendations - 1/4" (6 mm) to 5/16" (8 mm)
Be careful not to nick the conductor or cut away strands.

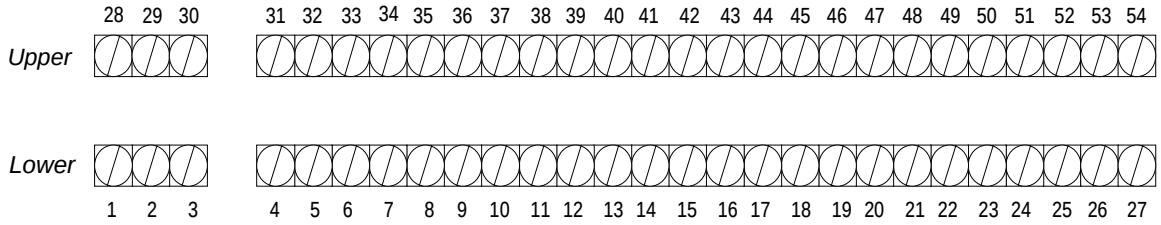

LOWER TERMINALS				UPPER TERMINALS			
Description	**Board**	**ID**	**#**	**#**	**ID**	**Board**	**Description**
	EXP	**ROUT1nc**	**1**	**28**	**ROUT2nc**	*EXP*	
Relay Output 1	*EXP*	**ROUT1c**	**2**	**29**	**ROUT2c**	*EXP*	**Relay Output 2**
	EXP	**ROUT1no**	**3**	**30**	**ROUT2no**	*EXP*	
	MPU	**+24Vdc**	**4**	**31**	**NCA**	*MPU*	**Network**
	MPU	**DOUT1+**	**5**	**32**	**NCB**	*MPU*	**Modbus or LIL**
Digital Outputs 1 & 2	*MPU*	**COM**	**6**	**33**	**+24Vdc**	*MPU*	
	MPU	**+24Vdc**	**7**	**34**	**AIN1+**	*MPU*	**Analog Input 1**
	MPU	**DOUT2+**	**8**	**35**	**AINCom**	*MPU*	
	MPU	**+24Vdc**	**9**	**36**	**+24Vdc**	*MPU*	
	MPU	**DIN1+**	**10**	**37**	**AIN2+**	*MPU*	**Analog Input 2**
	MPU	**DIN1-**	**11**	**38**	**AINCom**	*MPU*	
	MPU	**DIN2+**	**12**	**39**	**+24Vdc**	*MPU*	
Digital Inputs 1 - 4	*MPU*	**DIN2-**	**13**	**40**	**AIN3+**	*MPU*	**Analog Input 3**
	MPU	**DIN3+**	**14**	**41**	**AINCom**	*MPU*	
	MPU	**DIN3-**	**15**	**42**	**+24Vdc**	*EXP*	
	EXP	**DIN4+**	**16**	**43**	**AIN4+**	*EXP*	**Analog Input 4**
	EXP	**DIN4-**	**17**	**44**	**AINCom**	*EXP*	
	MPU	**COM**	**18**	**45**	**+24Vdc**	*EXP*	
	MPU	**AOUT1+**	**19**	**46**	**DINU1+**	*EXP*	
	MPU	**AOUTCom**	**20**	**47**	**DINU1-**	*EXP*	**Universal**
Analog Outputs 1 - 3	*MPU*	**AOUT2+**	**21**	**48**	**DINU2+**	*EXP*	**Digital Inputs 1 & 2**
	MPU	**AOUTCom**	**22**	**49**	**DINU2-**	*EXP*	
	EXP	**AOUT3+**	**23**	**50**	**FAIL**	*MPU*	**9.1.2.1.1.1.1 i|pow**
	EXP	**AINU1a**	**24**	**51**	**AINU2a**	*EXP*	
Universal	*EXP*	**AINU1b**	**25**	**52**	**AINU2b**	*EXP*	**Universal**
Analog Input 1	*EXP*	**AINU1c**	**26**	**53**	**AINU2c**	*EXP*	**Analog Input 2**
	EXP	**AINU1d**	**27**	**54**	**AINU2d**	*EXP*	

FIGURE 9-4 Controller Module, Field Terminal Assignments

Station Common, Terminals 6, 18, 20, 22, 35, 38, 41, and 44 - Within the controller assembly, station common is connected to:

- the two-wire power supply common
- digital output common
- all analog input and analog output commons

Station common is isolated from case/safety ground and it should be connected to the user's instrument bus common at only one point. Digital input commons are isolated from the station common and case/safety ground.

Shield Earthing Bar – This ground bus is located along the lower edge of each carrier, beneath and parallel to the two terminal strips. As shown in Figure 9-1, the left-hand ground terminal on a control carrier should be connected through a short, heavy gauge, multi-strand conductor (e.g. 12 AWG / 3.3 mm^2) to the grounded metal enclosure that surrounds 353R. The right-hand ground terminal is then connected to the left-hand ground terminal on the module carrier that plugs into the control carrier. Each module carrier's right-hand ground terminal is connected to the left-hand ground terminal of the module carrier that plugs into it. I/O and network cable shields are connected to the other terminals on this bus.

Connector Terminal Torque Specifications - Connector terminals - 5 in lbs (0.56 Nm)

Crimp-On (solderless) Connectors - A pin-style crimp-on connector can be used when two or more wires or a combination of wires and component leads are to be inserted into a connector terminal. Wires and leads are crimped in the connector and the connector pin inserted in the selected terminal. The connector can provide a more secure connection when multiple leads are involved. An example of its use is shown at right. Several crimp-on connectors are provided in various installation kits, and they are available from most electrical supply sources.

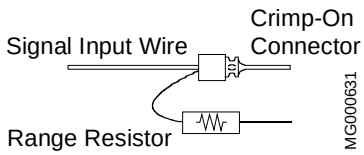

Wire Routing and Conduit - DC wiring should be separated from AC wiring and away from AC powered pushbuttons, alarms, annunciators, motors, solenoids, and similar devices. Conduit and raceways are commonly used for routing panel wiring. Wiring not installed in conduit or raceway should be clamped or supported approximately every 12 inches.

9.1.3 Controller and Expander I/O

The following subsections describe the control module's I/O circuitry and the user supplied field wiring between those circuits and typical field devices. While shielded wiring is not shown in every drawing, to simplify the drawings, twisted-pair, shielded wiring must be installed. Ground the shield at only one end; good shield grounding practices should always be employed.

9.1.3.1 Analog Input, AIN1-4 and AINU1 and 2

Analog signal input terminals are connected to software function blocks AIN and AINU within the controller assembly. Table 9-4 Control Module Field Terminal Assignments correlates function blocks and input terminals. These terminals will accept several input signal types with the appropriate wiring and components. A current input signal to an AIN function block must be converted to 1-5 Vdc by a 250Ω range resistor. A current input to an AINU function block must be converted to a 15-75 mVdc signal a 3.75Ω range resistor.

INPUT TYPE	FUNCTION BLOCKS(1)	RANGE RESISTOR(2)	FIGURE
4-20 mA	AIN1-4	250Ω	9-5 and 9-65
	AINU1 and 2	3.75Ω	9-7A
1-5 Vdc	AIN1-4	Not Required	9-5 and 9-6
Millivolt	AINU1 and 2	Not Required	9-7B

Notes:
(1) Function blocks AIN4, AINU1, and AINU2 are available only when an I/O Expander Board is installed.
(2) Range resistors listed are supplied in Installation Kits. Another resistor value is needed for another current input to an AIN block. Select a range resistor value that will provide a 1-5 Vdc input. For example, for 10-50 mA, install a 100Ω range resistor.

Crimp-on connectors are provided for use when a range resistor and a signal input wire are to be inserted in the same connector terminal. A connector should also be used when two wires of significantly different gauges would otherwise be inserted in a single connector terminal.

Perform the following steps for each analog input.

1. Select an analog input terminal pair for connection of the input signal wiring. Refer to Table 9-4 Control Module Field Terminal Assignments and the following illustrations as necessary.

   For a 4-20 mA input, go to step 2. For a 1-5 Vdc or millivolt input, go to step 4.

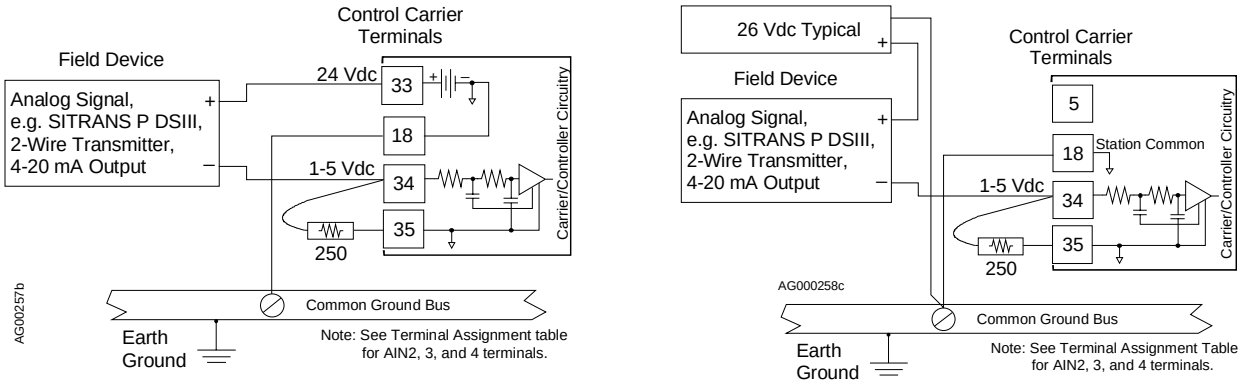

A. Controller Powered *B. External Power Supply*

FIGURE 9-5 Analog Input AIN1, 2-Wire Transmitter

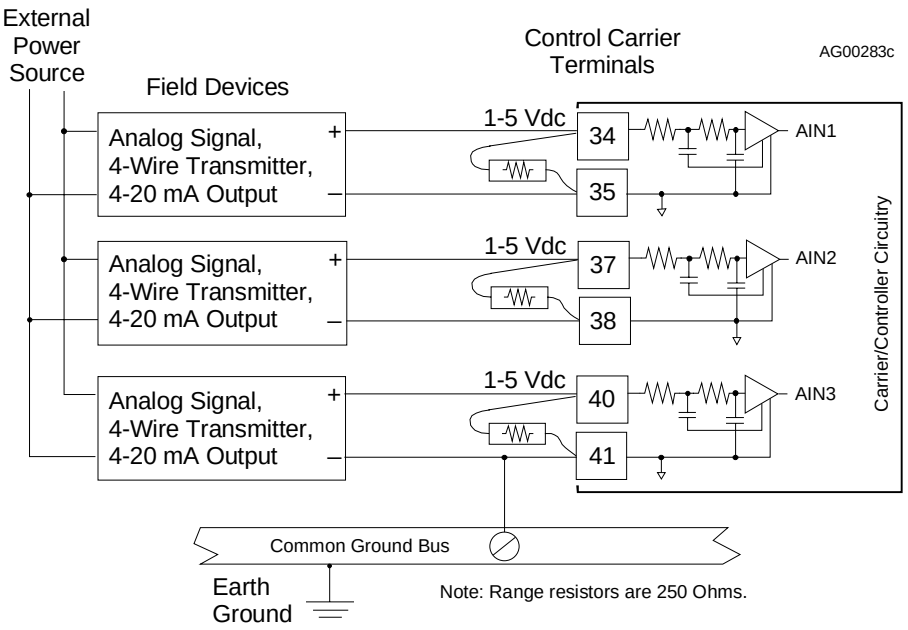

FIGURE 9-6 Analog Inputs AIN1, 2, and 3; 4-Wire Transmitters

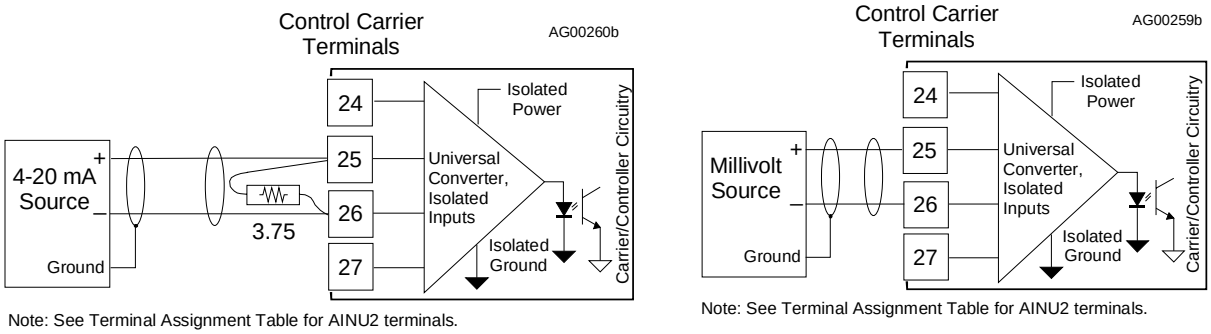

A. 4-20 mA Input *B. Millivolt Input*

FIGURE 9-7 Universal Analog Input AINU1

2. 4-20 mA Input Only - Select a 250Ω (for AIN#) or 3.75Ω (for AINU#) resistor from the installation kit and insulate the bent resistor lead with a piece of sleeving. At the lead end, approximately 1/4" (6 mm) to 5/16" (8 mm) of bare resistor lead should be exposed.

   If a crimp-on connector is to be used, go to step 3. Otherwise, go to step 4.

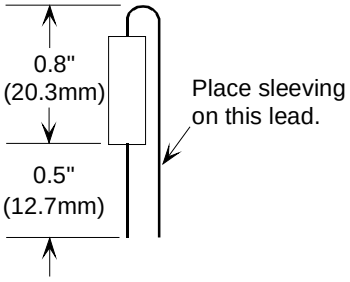

3. Crimp-On Connector - Insert the resistor lead and any signal wiring into the connector until the wire ends are visible at the pin end of the connector. Use a standard electrical connector crimp tool to crimp the connection. Be certain that all resistor leads and signal input wires are inserted in the connector before crimping.

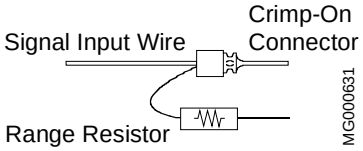

4. Loosen the two terminal screws using a straight blade screwdriver with a 1/8" (3 mm) blade width. Insert wires, resistor leads, or a crimp-on connector pin into the two openings in the side of the connector adjacent to the selected terminal numbers.

5. Check that all involved components and station wiring are fully inserted and carefully tighten the screws to 5 in. lbs. Do not over tighten.
6. Repeat steps 1-5 for each 4-20 mA, 1-5 Vdc and millivolt input.
7. Carefully dress resistors and wiring so that excessive stress is not placed on a component, wire, or connection.

9.1.3.2 Analog Output, AOUT 1-3

Analog output functions blocks are AOUT1, AOUT2, and AOUT3. Figures 9-8 and 9-9 show connections for an external device that accepts 4-20 mA and an external device that needs 1-5 Vdc. Refer to the Analog Input section for wiring guidelines.

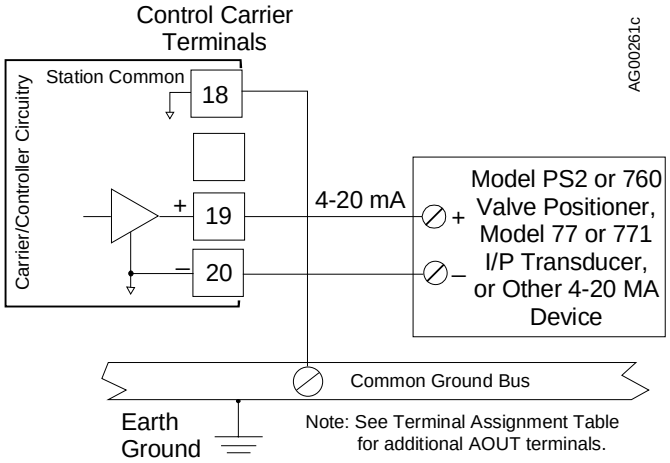

FIGURE 9-8 Analog Output AOUT 1, Current Output

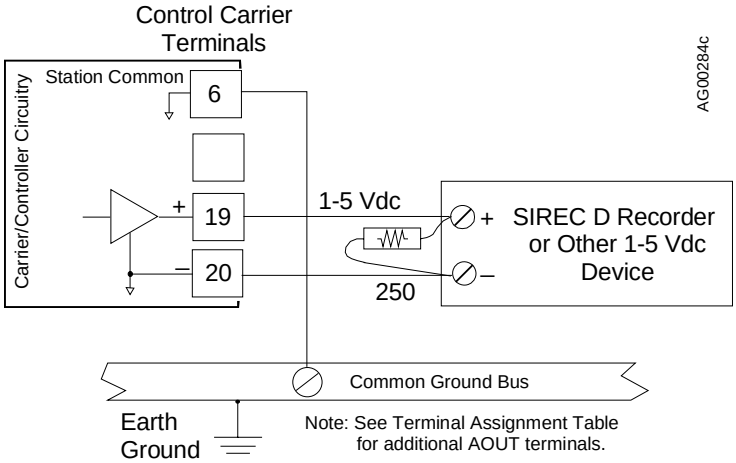

FIGURE 9-9 Analog Output AOUT1, Voltage Output

9.1.3.3 Digital Input and Output, DIN1 and 2 and DINU 1 and 2

Connections to Digital Input and Digital Input Universal function blocks are shown in Figure 9-10. Wiring for internal and external power sources is shown. Semiconductor devices can replace the mechanical switches shown. Wiring guidelines are found in the Analog Input section.

Digital input commons, e.g. DIN1 (-), are isolated from station common and from case/safety ground.

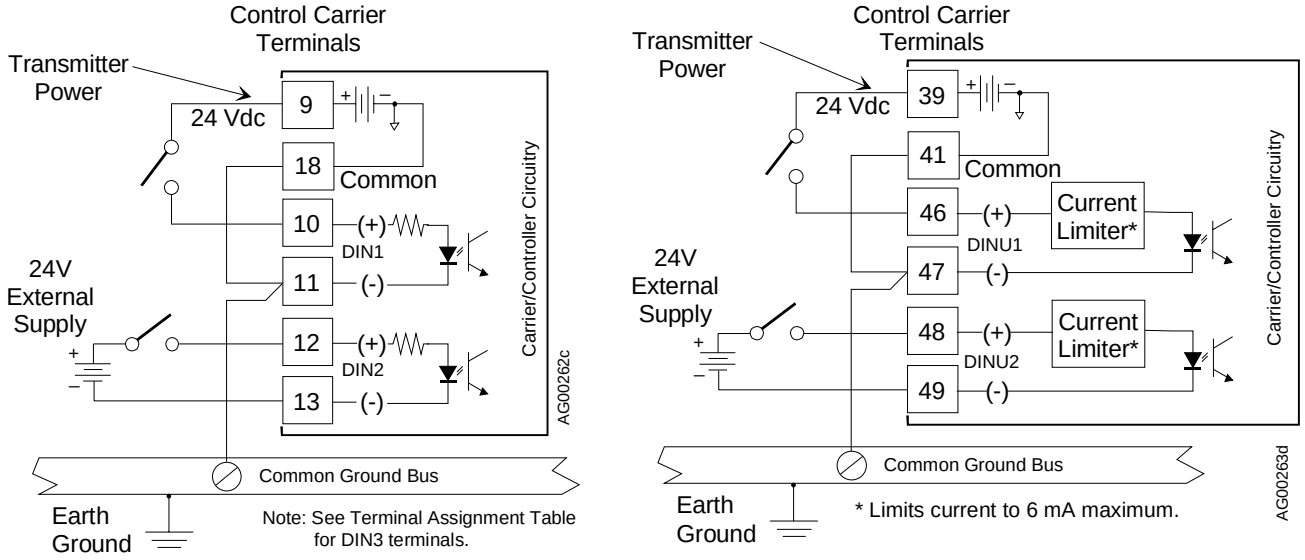

A. DIN1 and 2 **B. DINU1 and 2**

FIGURE 9-10 Digital Inputs DIN and DINU

Digital output wiring is shown in Figure 9-11. Three diagrams are provided showing current and voltage outputs. Note the use of transient suppression diodes in diagram C. Always install a transient suppression component across a reactive component, such as a relay coil, to protect the semiconductor devices in the control module.

Digital output common, DOUTC, is connected to station common.

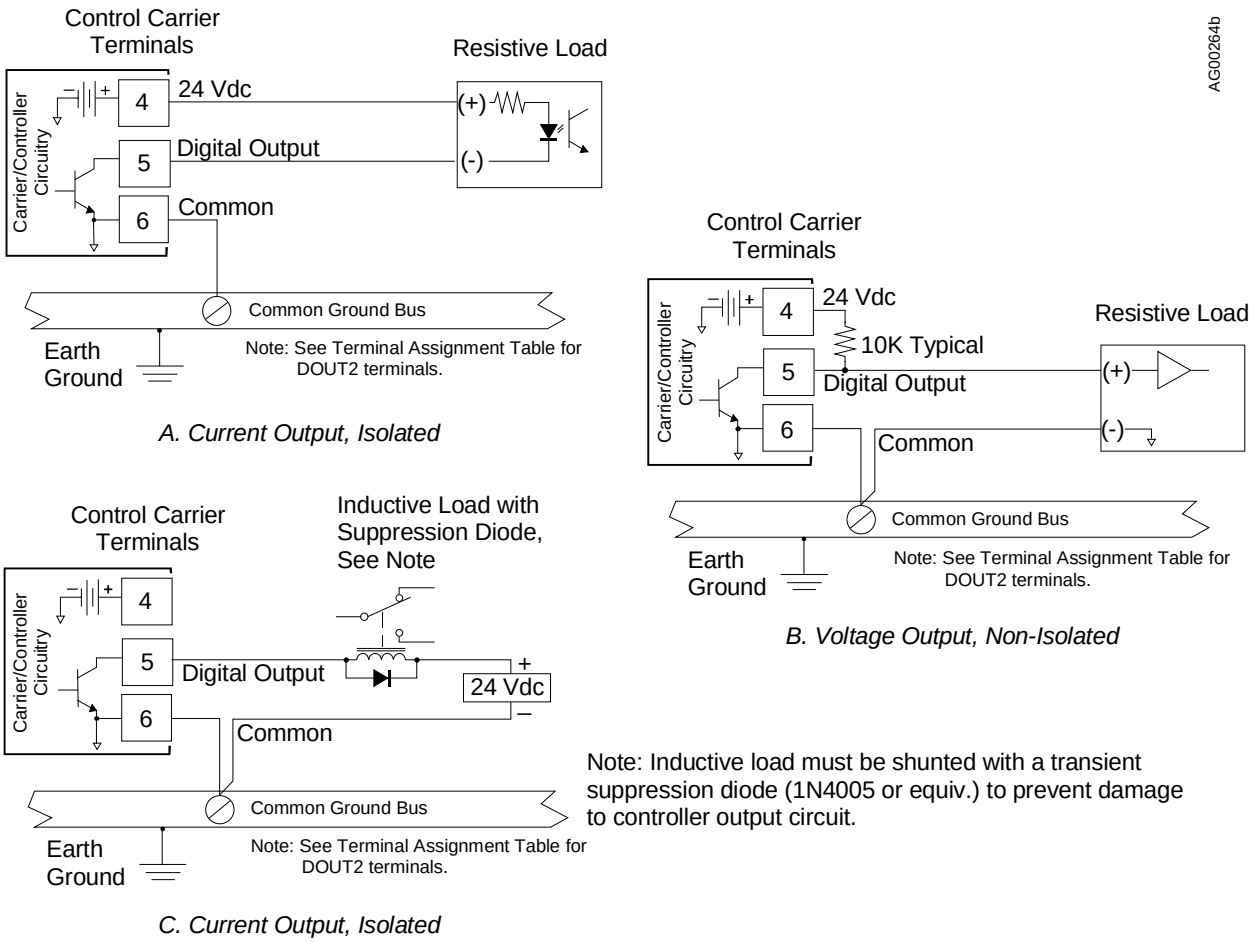

FIGURE 9-11 Digital Output DOUT1, Resistive and Inductive Loads

9.1.3.4 Thermocouple, AINU 1 and 2

Function blocks AINU1 and AINU2 can be configured for thermocouple or RTD input.

Thermocouple input wiring is shown in Figures 9-12 and 9-13. Shown first is lead preparation for the supplied reference junctions (RJ); a brief procedure is presented below. Wiring for a typical grounded tip thermocouple is shown next. If an ungrounded thermocouple is used, the thermocouple wire shield can be grounded at the control carrier. Thermocouple wire often has a solid conductor. Make connections as outlined in Analog Input section. Be sure that the solid conductor is satisfactorily clamped by the terminal screw and pressure plate.

Thermocouple reference junction (RJ) installation:

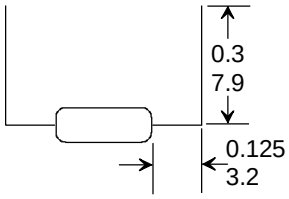

1. Carefully form the leads as shown at right.
2. Refer to the following two Figures and loosen the two terminal screws using a straight blade screwdriver with a 1/8″ (3 mm) blade width.
3. Insert the reference junction leads into the two openings in the side of the connector adjacent to the selected terminal numbers.
4. Carefully locate the reference junction body as shown in Figure 9-13. Press the body of the junction against the terminal body but not block the two intervening terminals.

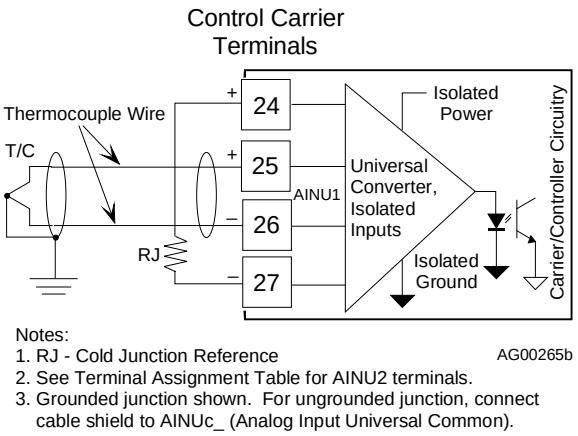

Notes:
1. RJ - Cold Junction Reference
2. See Terminal Assignment Table for AINU2 terminals.
3. Grounded junction shown. For ungrounded junction, connect cable shield to AINUc_ (Analog Input Universal Common).

FIGURE 9-12 Universal Analog Input AINU1, Thermocouple Input

5. Check that all involved components and station wiring are fully inserted and tighten the screws to 5 in. lbs.
6. Repeat the above steps if the other AINU function block is to be used as a thermocouple input.
7. Connect thermocouple wiring as shown in the above Figure.

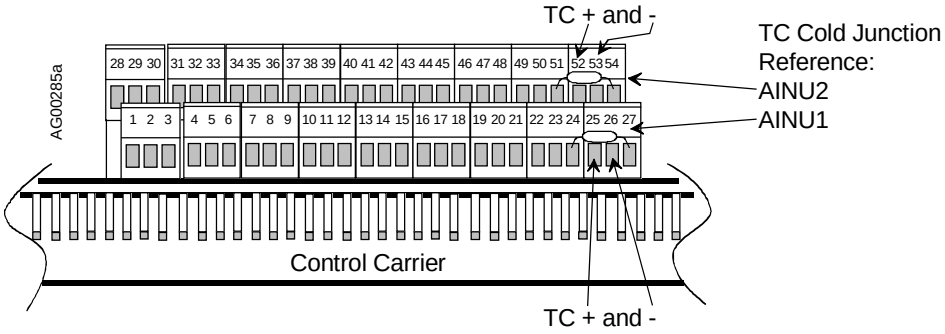

FIGURE 9-13 TC Reference Junction Locations, AINU1

9.1.3.5 RTD, AINU1 and 2

Wiring for 2-, 3-, and 4-wire RTDs is shown in Figure 9-14. Make connections as outlined in the Analog Input section. Note the wire jumper between terminals 26 and 27 when a 2-wire RTD is installed.

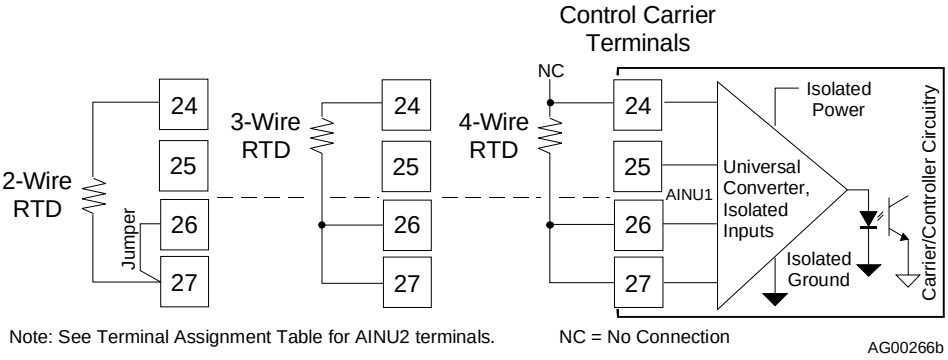

Note: See Terminal Assignment Table for AINU2 terminals. NC = No Connection

FIGURE 9-14 Universal Analog Input AINU1; 2, 3, and 4-Wire RTD Inputs

9.1.3.6 Ohm and Slidewire, AINU 1 and 2

Function blocks AINU1 and AINU2 can be configured for ohm or slidewire inputs. Figure 9-15 shows the needed connections.

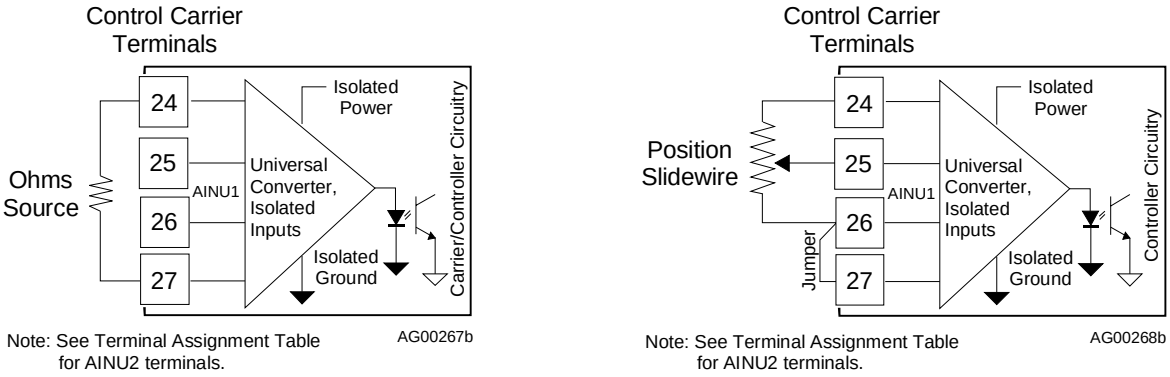

A. Ohms Input **B. Slidewire Input**

FIGURE 9-15 Universal Analog Input AINU1

9.1.3.7 Relay Output, ROUT 1 and 2

Function blocks ROUT1 and ROUT2 are located on the I/O Expander board. They provide two single-pole, double-throw relay outputs, as shown in Figure 9-16. Relay contact ratings are stated at the back of this section.

The load connected to a closed contact should draw a current between the minimum and maximum contact ratings. A resistive load is recommended. An inductive or capacitive load can cause high peak currents or contact arcing which can pit or otherwise damage contacts. The arcing associated with an inductive load can be limited by connecting a voltage transient suppressor, such as a 1N4005 diode, across the load.

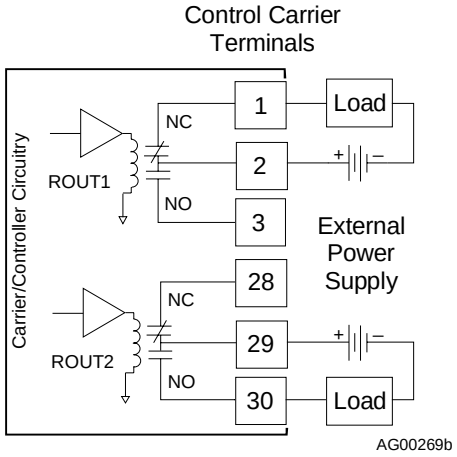

FIGURE 9-16 Universal Relay Outputs ROUT1 and 2, Resistive Load

9.1.3.8 Local Instrument Link

The Local Instrument Link (LIL) is a high performance digital data link that carries commands and responses between user selected stations. Each station must be identified by a unique link address. This address permits commands and responses to be sent from one station to another specific station. Lower link addresses are 1 through 32. A Model 321 Expansion Satellite is used to add an upper link with addresses 33 through 64. In 353R and 353 (Design Level A), the Station address is entered as the ADDRESS parameter in the STATN function block. Specific instructions for setting a link address in other models are available in the Installation And Service Instructions for that particular model. Refer to SD15492 for complete installation, wiring, and service instructions for the Local Instrument Link.

Figure 9-17 shows typical wiring for stations connected to the LIL. Link cabling and wiring involves twinaxial cable and twisted pair wiring. Twinaxial cable is a twisted pair, shielded cable that is used for runs of 2 feet (0.6m) or more. Unshielded twisted pair wiring is used mainly for interconnecting row mounted stations. Twisted pair wiring can also be used for runs up to 2 feet in length, for example, between rows of stations.

Two types of twinaxial cables are recommended: Belden 9182 for links up to 1500 feet (457 meters) and Belden 9860 for links up to 4000 feet (1220 meters). Either type of cable may be used on a single link. To prevent noise interference, electrically distribute stations as follows:

- no more than 8 stations may be connected within any 10 foot (3m) section of lower or upper link
- no more than 16 stations may be connected within any 100 foot (30m) section of lower or upper link
- insert 100 feet of coiled twinaxial cable between clusters of up to 8 stations

Tap boxes can be installed to serve as a connector interface between Link twinaxial cables and twisted pair wiring connected to screw terminals. Tap boxes provide over-voltage/lightening protection by including eight transient voltage suppressors and one 130V surge arrestor. Link termination is also provided by two 150Ω resistors.

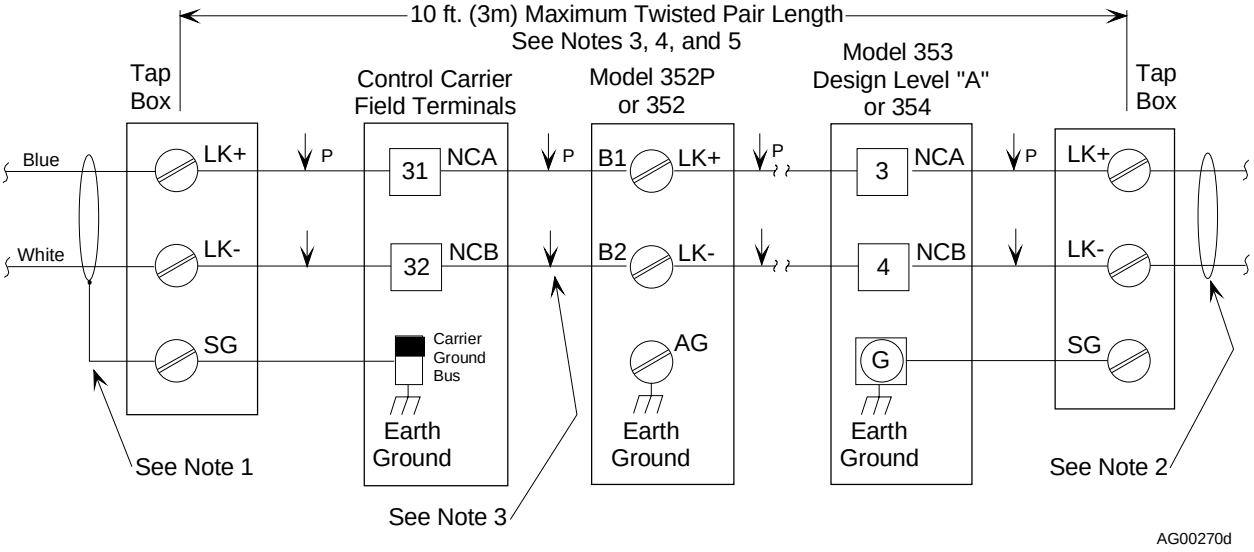

Notes:

1. Drain wire of shield connects to terminal SG. A short jumper of 16 AWG insulated wire grounds shield to station earth ground.
2. Drain wire of shield is cut back and insulated.
3. Twisted pair wiring is used to interconnect stations separated by up to 2 ft (0.6 meters). Twinaxial cable is used for distances greater than 2 ft (0.6 meters). The maximum twisted pair length is 10 ft (3 meters).
4. When there is no tap box at the end of a link, connect a 150 ohm, ±5%, resistor across the link conductors at the last station.
5. See Local Instrument Link Installation And Service Instruction SD15492 for details.

FIGURE 9-17 LIL Network Wiring

9.1.3.9 Modbus

Modbus communications is available at two locations:

- Controller field terminals NCA and NCB on the control carrier – RS485 2-wire connection typically used for network wiring. These connections are discussed below.
- P1 on the control carrier – RS232 MMJ11 connection typically used to connect i|station or a laptop computer for uploading/downloading controller configurations.

This section describes the wiring needed to connect a host device to a 353R Modbus network interface. When connected, the host can read data from and write data to a 353R in a command/response format.

Most host devices communicate using RS232 while the Modbus network interface is RS485. As shown below, a 2-wire RS485 to RS232 converter is installed to perform the protocol conversion and adapt the connection hardware. A shielded RS232 MMJ11 cable (PN16353-61) with either a DB9 or DB25 adapter is installed between the host device and the converter. An RS485 shielded, twisted-pair cable connects the converter to a 353R. Up to 32 353R controllers can be connected since RS485 is a multi-drop network.

Figure 9-18 below shows the jumper locations and identifiers for the Entrelec® Isolated Converter in Figure 9-19.

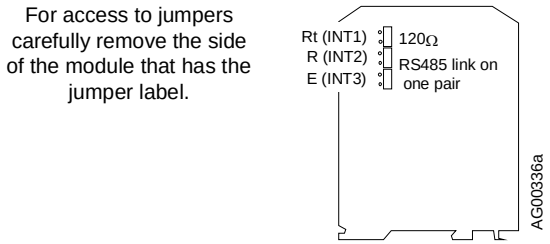

Entrelec ILPH 084.233.11 Isolated Converter

FIGURE 9-18 Modbus Converter

9.1.3.10 Ethernet

A sample architecture and a brief description are presented in Section 1 Introduction. An RJ-45 Ethernet connector (P4) is located on the control carrier and the optional Ethernet board is mounted on the MPU Controller board in the control module.

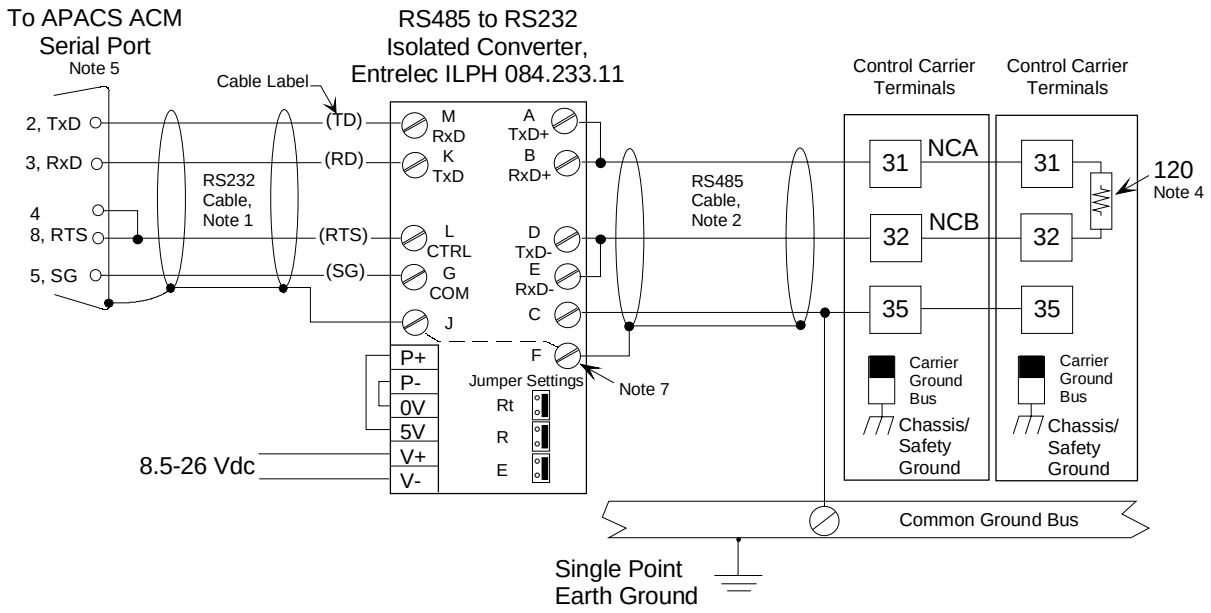

A. Modbus Communications, APACS ACM to 353R

AG00271d

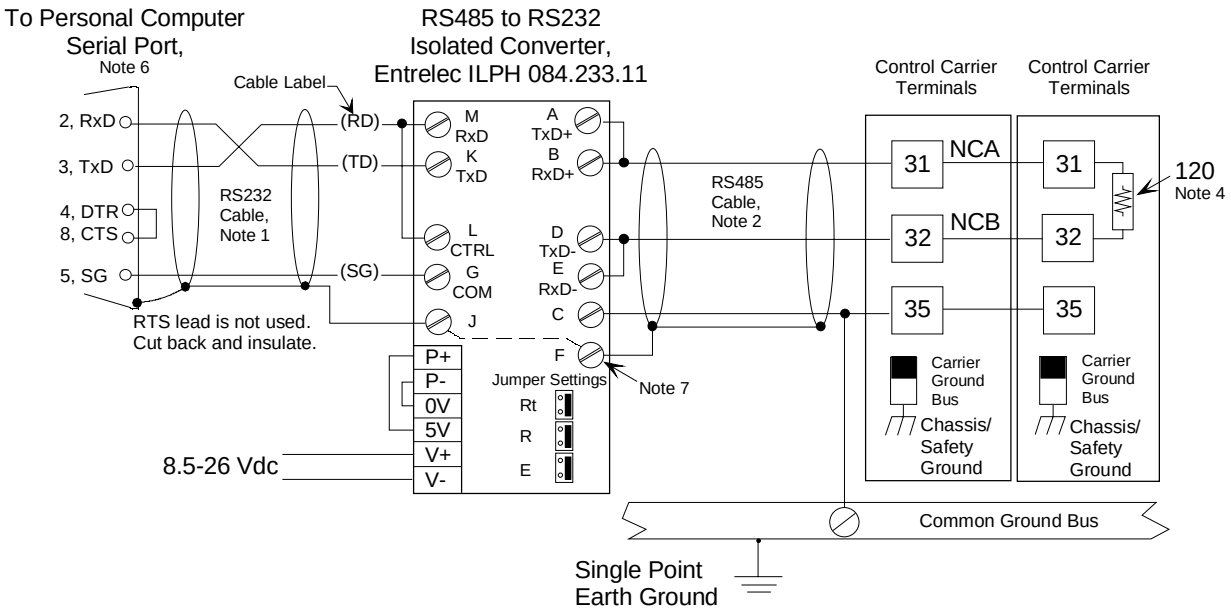

B. Modbus Communications, Personal Computer to 353R

Notes:

1. RS232 - Cable must be shielded and less than 50 feet (15 meters) in length. Recommended cable is Belden 9927, 24 AWG, or equivalent. For an assembled cable, order Siemens PN 16137-191.
2. RS485 - Recommended cable is Belden 9842, 24 AWG, 120Ω or equivalent.
3. Up to 32 controllers (e.g. Siemens/Moore Models 353R, i|pac, 352P, 353, 354) can be connected.
4. A user-supplied 120Ω network termination resistor should be installed on the last device on the network.
5. In ACM's SERIAL Function Block, set Flow Control to 1.
6. Assembled cable above has male (plug) DB9 connector. Connection to computer serial port may require a DB9 (socket/receptacle) gender adapter.
7. Connection between F and J provided by Entrelec converter.

FIGURE 9-19 Modbus Communications, 353R to APACS ACM and Personal Computer

9.1.4 SIREC D Recorder Connections

Figure 9-20 shows the wiring needed to connect a Siemens SIREC D recorder analog input to a 353R analog input. As shown, a 1-5 Vdc transmitter input to the 353R is also routed the recorder's Analog Input 1.

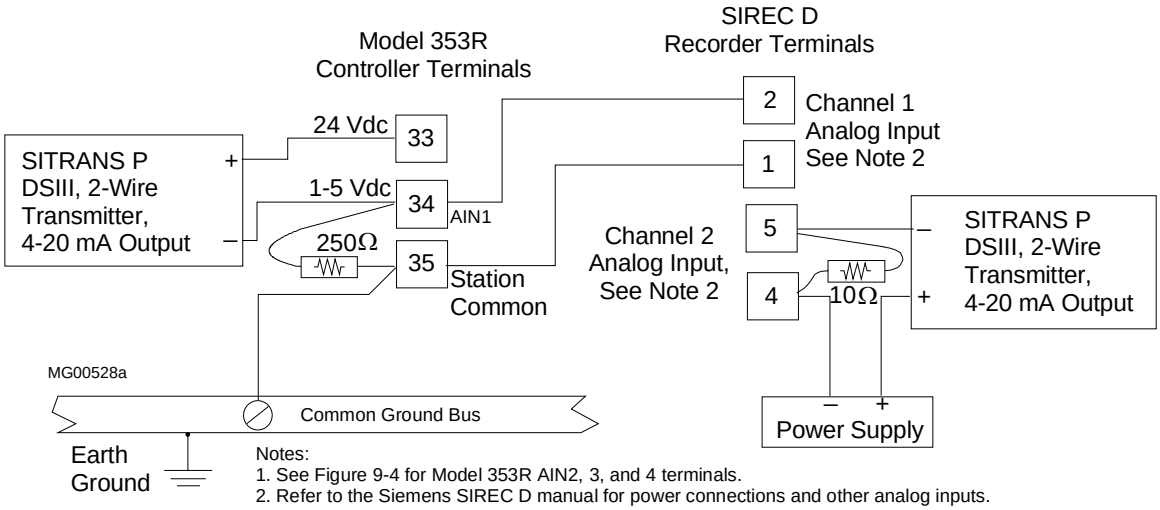

FIGURE 9-20 353R To Siemens SIREC D Recorder Analog Input Wiring

9.1.5 Factory Calibration

Unless a special calibration is ordered, the factory calibration is as follows:

Factory Calibration

ANALOG INPUT OR OUTPUT	FACTORY CALIBRATION, UP TO V1.21	FACTORY CALIBRATION, V1.30 AND ABOVE
Analog input function blocks	1 to 5 Vdc	1 to 5 Vdc
Analog output function blocks	4 to 20 mA	4 to 20 mA
Thermocouple	Type J, Upscale Break	Type J, Upscale Break
RTD	CAL ZERO - 0°C CAL FULL - 500°C CAL VIEW - -3.3 to 103.3%	CAL ZERO - 0°C CAL FULL - 500°C CAL VIEW - -3.3 to 103.3%
Slidewire	CAL ZERO - 0% CAL FULL - 100% CAL VIEW - Contact factory	CAL ZERO - 0% CAL FULL - 100% CAL VIEW - Contact factory
Ohms	CAL ZERO - 0 ohms CAL FULL - 5000 ohms CAL VIEW - Contact factory	CAL ZERO - 0 ohms CAL FULL - 5000 ohms CAL VIEW - Contact factory
Millivolt	CAL ZERO - 0.0 mV CAL FULL - 10 mV CAL VIEW - 0% TO 100%	CAL ZERO - -19.0 mV CAL FULL - +19.0 mV CAL VIEW - 0% TO 100%

Calibration procedures that may be used to check or change factory calibration are provided in Section 13 Maintenance.

9.1.6 Servicing

Refer to Section 13 Maintenance for troubleshooting procedures. To replace a circuit board or to add or change functionality by field installing a new circuit board, see Section 13.5 Assembly Replacement.

9.1.7 Specifications

I/O specifications for the circuits on the MPU Controller and I/O Expander boards follow.

9.1.7.1 MPU Controller Board

Analog Inputs: (3)

- Input Range ..... 0-5 Vdc (standard calibration 1-5 Vdc)
  - Zero ..... 0-1 Vdc
  - Span ..... 4-5 Vdc
- Type ..... Single ended
- Accuracy ..... 0.10 %
- Resolution ..... 0.024 %
- Software Output Type ..... Analog [configurable (default 0.0-100.0)]
- Normal Mode Rejection ..... >50dB @ 60Hz.
- Input Impedance ..... >1 megohm
- Maximum Continuous Input
  - Without Crosstalk ..... +7, -30 Vdc
  - Without Damage ..... ±30 Vdc

Analog Outputs: (2)

- Standard Calibration ..... 4-20 mAdc
  - Zero ..... 4 mAdc +/- trim
  - Span ..... 16 mAdc +/- trim
- Current Limits ..... 2.4 mA to 21.6 mA
- Accuracy: 0.1%
- Resolution: 0.003%
- Software Input Type ..... Analog [configurable (default 0.0-100.0)]
- Signal Reference ..... Neg. (-) output tied to station common
- Output Load ..... 800 Ohms
- Overvoltage Protection ..... 30 Vdc

Digital Inputs: (3)

- Logic “1” Range ..... 15-30 Vdc
- Input Current ..... 10 mA @ 24 Vdc
- Logic “0” Range ..... 0-1 Vdc
- Overvoltage ..... +/-30 Vdc
- Minimum Required ON time ..... >Scan Time
- Software Output Type ..... Digital
- Isolation ..... 100 Vdc

Digital Outputs: (2)

- Type ..... Open Collector Transistor (emitter tied to station common)
- Load Voltage ..... +30Vdc maximum
- Load Current ..... 100 mA maximum
- Off State Leakage Current ..... < 200 uA @ 30 Vdc

Transmitter Power ..... 24 Vdc +/-10%, Models 353RPSUA**D** and **C**, see Power Supply Module nameplate for current; protected with self healing fuse

9.1.7.2 I/O Expander Board

Analog Inputs, Universal: (2)

Type ‘J’ Thermocouple:

Range Limits.....-185°C to 1100°C (-300°F to 2010°F)
Performance Range.....0 to 1100°C
Accuracy* .....+/-0.5°C
Conformity.....<= 0.06°C
Software Output Type.....Analog (configurable °C, °F, °R, °K)
Ambient Temperature Effect: .....+/- 0.08°C/°C

Type ‘K’ Thermocouple:

Range Limits.....-185°C to 1370°C (-300°F to 2500°F)
Performance Range.....0 to 1370°C
Accuracy* .....+/-0.6°C
Conformity.....<= 0.06°
Software Output Type.....Analog (configurable °C, °F, °R, °K)
Ambient Temperature Effect: .....+/- 0.10°C/°C

Type ‘T’ Thermocouple:

Range Limits.....-240°C to 370°C (-400°F to 698°F)
Performance Range.....-100 to 370°C
Accuracy* .....+/-0.5°C
Conformity.....<= 0.06°
Software Output Type.....Analog (configurable °C, °F, °R, °K)
Ambient Temperature Effect: .....+/- 0.07°C/°C

Type ‘E’ Thermocouple:

Range Limits.....-185°C to 1000°C (-300°F to 1830°F)
Performance Range.....0 to 1000°C
Accuracy* .....+/-0.5°C
Conformity.....<= 0.06°
Software Output Type.....Analog (configurable °C, °F, °R, °K)
Ambient Temperature Effect: .....+/- 0.07°C/°C

Type ‘S’ Thermocouple:

Range Limits.....-18°C to 1650°C (0°F to 3000°F)
Performance Range.....200 to 1650°C
Accuracy* .....+/-0.7°C
Conformity.....<= 0.06°
Software Output Type.....Analog (configurable °C, °F, °R, °K)
Ambient Temperature Effect: .....+/- 0.14°C/°C

Type ‘R’ Thermocouple:

Range Limits.....-18°C to 1610°C (0°F to 2930°F)
Performance Range.....200 to 1610°C
Accuracy* .....+/-0.7°C
Conformity.....<= 0.06°
Software Output Type.....Analog (configurable °C, °F, °R, °K)
Ambient Temperature Effect: .....+/- 0.15°C/°C

* Under field operating conditions, field calibration may be required to achieve published accuracy specifications.

Type ‘B’ Thermocouple:

Range Limits.....-18°C to 1815°C (0°F to 3300°F)
Performance Range.....800 to 1815°C
Accuracy* .....+/-0.7°C
Conformity.....<= 0.06°
Software Output Type.....Analog (configurable °C, °F, °R, °K)
Ambient Temperature Effect: .....+/- 0.15°C/°C

Type ‘N’ Thermocouple:

Range Limits.....-200°C to 1300°C (-325°F to 2370°F)
Performance Range.....0 to 1300°C
Accuracy* .....+/-0.5°C
Conformity.....<= 0.06°
Software Output Type.....Analog (configurable °C, °F, °R, °K)
Ambient Temperature Effect: .....+/- 0.10°C/°C

Type DIN 43760/ IEC 751 RTD (à = 0.003850):

Range Limits.....-185°C to 622°C (-300°F to 1152°F)
Accuracy* .....+/-0.4 °C
Software Output Type.....Analog (configurable °C, °F, °R, °K)
Ambient Temperature Effect: .....+/- 0.04°C/°C

Type US (NBS126) RTD (à = 0.003902):

Range Limits.....185°C to 613°C (-300°F to 1135°F)
Accuracy* .....+/-0.4°C
Software Output Type.....Analog (configurable °C, °F, °R, °K)
Ambient Temperature Effect: .....+/- 0.04°C/°C

Type JIS C-1604 RTD (à = 0.003916):

Range Limits.....-185°C to 610°C (-300°F to 1130°F)
Accuracy* .....+/-0.4°C
Software Output Type.....Analog (configurable °C, °F, °R, °K)
Ambient Temperature Effect: .....+/- 0.04°C/°C

Slidewire

Resistance Range .....500-5000 Ω
Software Output Type.....Analog (% slidewire 0.0 to 100.0)
Accuracy* .....+/- 0.1%
Ambient Temperature Effect: .....+/- 0.01°C/°C

Ohms

Resistance Range .....0-5000 Ω
Software Output Type.....Analog (ohms)
Accuracy* .....+/- 0.1%
Ambient Temperature Effect: .....+/- 0.01°C/°C

Millivolt

Narrow Range .....-19.0 to 19.0 mVdc
Accuracy* .....+/-5.0 uV
Ambient Temperature Effect.....1.0 uV/°C
Wide Range.....-30.0 to 77 mVdc
Accuracy* .....+/-8.0 uV
Ambient Temperature Effect.....2.5 uV/°C
Software Output Type.....Analog (millivolts)

AINU Overvoltage

Control Module Field Terminals for AINU1	Control Module Field Terminals for AINU2	Maximum
25 to 26*	52 to 53	+/-30 Vdc
24 to 26 27 to 26	51 to 53 54 to 53	+5/-0.7 Vdc
24, 25, 26, or 27 to station common	51, 52, 53, or 54 to station common	+/-30 Vdc

* Example: Between terminals 25 and 26 the maximum voltge is +/- 30 Vdc.

Analog Input: (1)

- Input Range ..... 0-5 Vdc (standard calibration 1-5 Vdc)
  - Zero ..... 0-1 Vdc
  - Span ..... 4-5 Vdc
- Type ..... Single ended
- Accuracy ..... 0.10 %
- Resolution ..... 0.024 %
- Software Output Type ..... Analog [configurable (default 0.0 - 100.0)]
- Normal Mode Rejection ..... >50dB @ 60Hz.
- Input Impedance ..... >1 megohm
- Maximum Continuous Input ..... +/-30 Vdc

Analog Output: (1)

- Standard Calibration ..... 4-20 mAdc
  - Zero ..... 4 mAdc +/- trim
  - Span ..... 16 mAdc +/- trim
- Current Limits ..... 2.4 mA to 21.6 mA
- Accuracy ..... 0.10 %
- Resolution ..... 0.003 %
- Software Input Type ..... Analog [configurable (default 0.0 - 100.0)]
- Signal Reference ..... Neg. (-) output tied to station common
- Output Load ..... 800 Ohms
- Overvoltage Protection ..... 30 Vdc

Digital Input: (1)

- Logic “1” Range ..... 15-30 Vdc
- Input Current ..... 10 mA @ 24 Vdc
- Logic “0” Range ..... 0-1 Vdc
- Overvoltage ..... +/-30 Vdc
- Minimum Required ON Time ..... >Scan Time
- Software Output Type ..... Digital
- Isolation ..... 100 Vdc

Universal Digital Inputs: (2)

- Logic “1” Range ..... 4-30 Vdc
- Input Current ..... 5 mA @ 24 V
- Logic “0” Range ..... 0-1 Vdc
- Overvoltage ..... +/-30 Vdc
- Frequency Range ..... 0 to 25,000 Hz.
- Accuracy ..... 0.03 % of reading
- Minimum Operating Frequency ..... 0.05 Hz.
- Pulse Width ..... 20 µsec (minimum)
- Signal Types ..... Sine Square, Pulse, Triangle, or Contact Closure (contacts require external power)
- Software Output Types: ..... (a) Scaled Frequency: Analog
  (b) Scaled Count: Analog

(c) Current Input State: Digital
Isolation.....100 Vdc

Relay Outputs: (2)
Type.....Sealed (meets requirements of Division 2 applications)
Software Input Type.....Digital
Contact Configuration.....SPDT
Contact Rating.....5A @ 115 Vac; 2.5A @ 230 Vac (resistive load)
Minimum Current.....100 mA @ 10 mVdc or 150 mA @ 50 mVac

9.1.8 Where to Go Next

Install power supply module (see Section 9.2 Model 353RPSUAD_)
Install i|o module(s) (See Sections 9.3 through 9.22 for installation of each i|o module.)

■

9.2 MODEL 353RPSUAD_ POWER SUPPLY MODULE

This section describes installation of the Model 353RPSUAD_ Universal AC Power Supply Module. Install the module in the location marked on a Model 353RCC**B**_ Control Carrier, as shown in Figure 9-21 below. The module is also installed on a Power Supply Carrier, as shown in Figure 9-22.

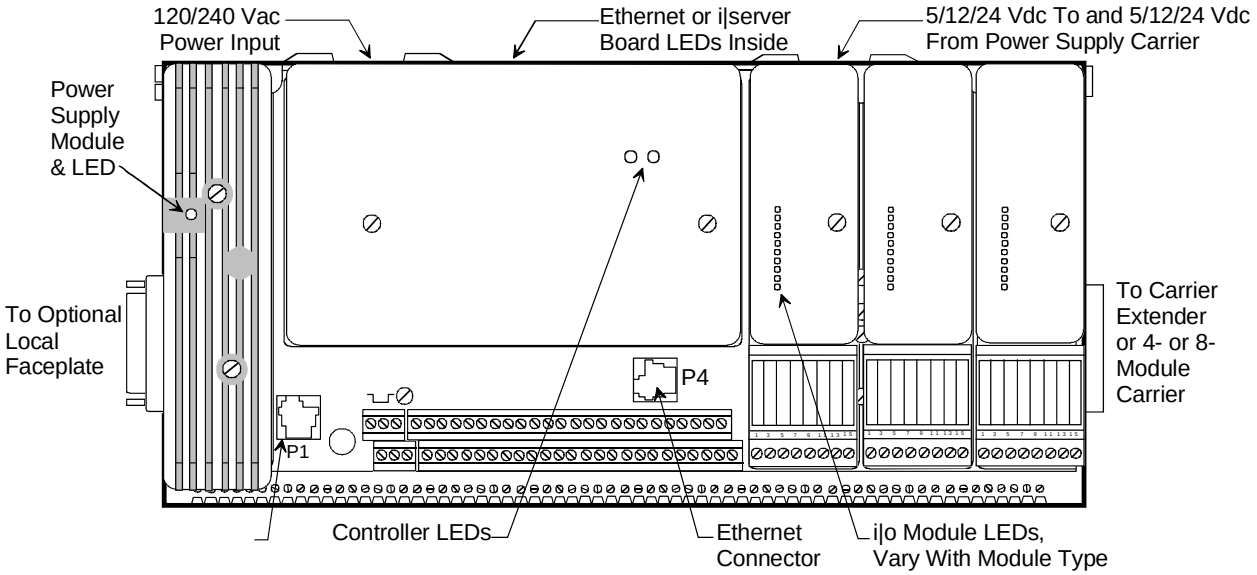

FIGURE 9-21 Assembled Control Carrier, Top View

IMPORTANT

Model TGX:353RPSUAD4 (Design Level "D") Power Supply Modules replace Models:

- iPAC-PSUA-**A**N
- iPAC-PSUA-**B**4
- TGX:353RPSUA**B**4
- TGX:353RPSUA**C**4

All Power Supply Modules on the carrier must be the same Design Level.

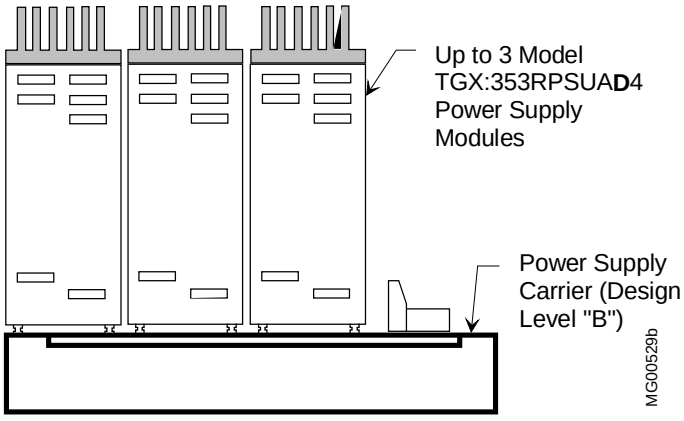

FIGURE 9-22 Power Supply Modules on a Power Supply Carrier, Front View

Each power supply module has 5, 12 and 24 Vdc outputs. Each also has a power share circuit. When two or more power supply modules are installed, the modules share the imposed load equally. When a sufficient number of power supply modules are installed to power the 353R system and then an additional power supply is installed, redundancy is provided.

Each installed module provides:

- 5 Vdc to controller module circuits
- 12 Vdc to the i|o modules on the control carrier and to the i|o modules on connected module carriers, as shown in Figure 9-23.
- 24 Vdc to the 353R controller and to 24V i|o modules on the control carrier. The 24 Vdc bus is not continued on connected module carriers. Instead, one or more power supplies on the power supply carrier provide the bussed field power voltages for the i|o modules on the module carriers.

  The 24 Vdc from the control carrier power supply is also available at controller field terminals 4, 7, 9, 33, 36, 39, 42, and 45 to power transmitters, relays, and other low current field devices. Appendix B - Determining Current Demand contains a series of steps to determine system current demand to insure that power supply current specifications are not exceeded.

Additional external power supplies may be needed to provide field power to field devices connected to i|o modules with isolated inputs or outputs.

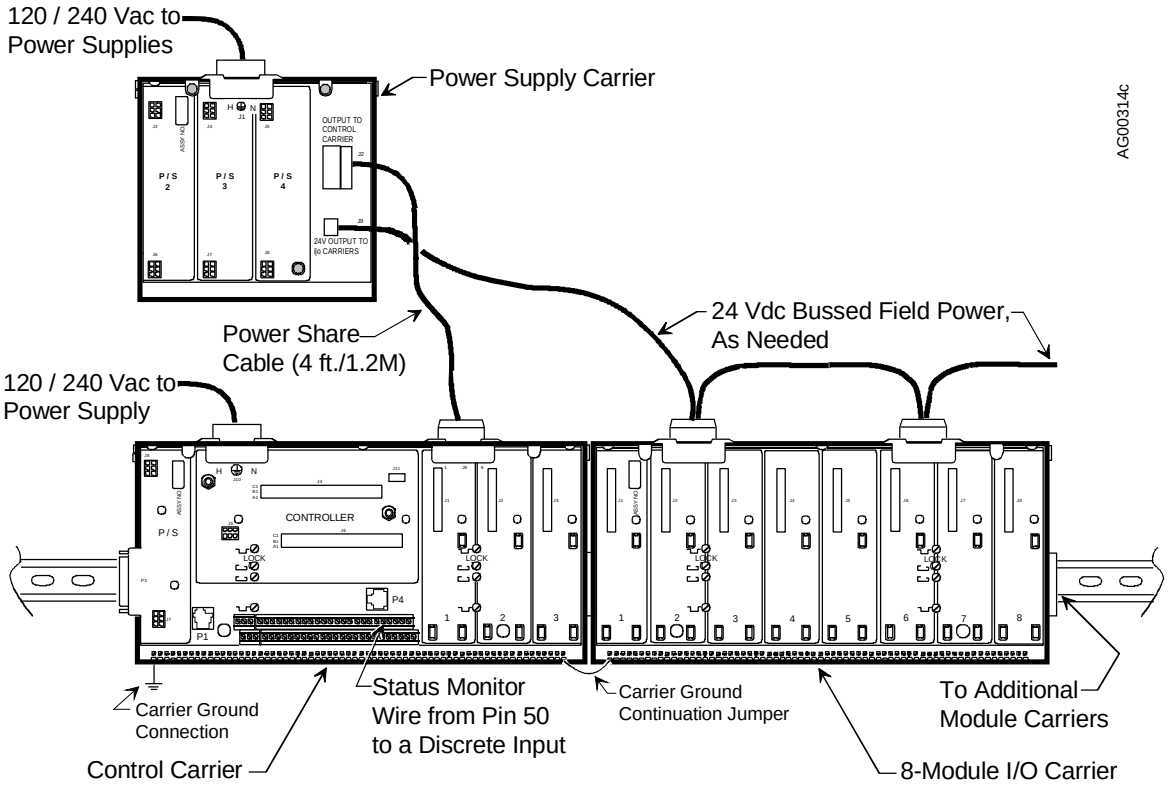

FIGURE 9-23 Power Supply Carrier Cabling

9.2.1 Install the Power Supply

Insert one or more power supply modules in the locations shown in Figures 1 and 2 and tighten the mounting screws. Maximum torque is 1 in-lb (0.11 Nm). Do not over tighten. A module can be installed in any power supply carrier location.

WARNING

Explosion hazard

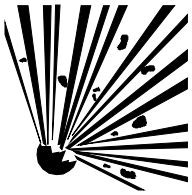

Explosion can cause death or serious injury.

In a potentially explosive atmosphere, remove power from the equipment before unplugging or plugging in a power supply module or i|o module.

All pertinent regulations regarding installation in a hazardous area must be observed.

IMPORTANT

All power supply modules installed on a Control Carrier and Power Supply Carrier must be the same design level.

9.2.2 Wiring

There are no wires to be connected to the power supply module.

9.2.3 Specifications

Voltage Input
- TGX:353RPSUAD_.....85-264 Vac, 47-63 Hz
- AC power ride through time.....25 msec. (minimum)

Output Voltages and Currents .....5 Vdc @ 1.7A; 12 Vdc @ 2A; 24 Vdc @ 800 mA

Overcurrent Protection .....20A maximum fuse or circuit breaker

IMPORTANT

Refer to the power supply nameplate for latest specifications. Do not exceed power supply ratings.

9.2.4 Where to Go Next

Install 4- or 8-module carrier(s) (see Section 8.2 Model iO-(4/8)MC)
Install i|o module(s) on control carrier (see Sections 9.3 through 9.22 for installation of each i|o module.)

■

9.3 MODEL IO-4TC MODULE

This 4-channel thermocouple or millivolt input module provides four channels for monitoring input signals from thermocouples or mV sources. The function of the module is set up during configuration. Cold junction compensation for thermocouple applications is provided by means of a sensor in the field terminal. The recommended field terminals only must be used with this module.

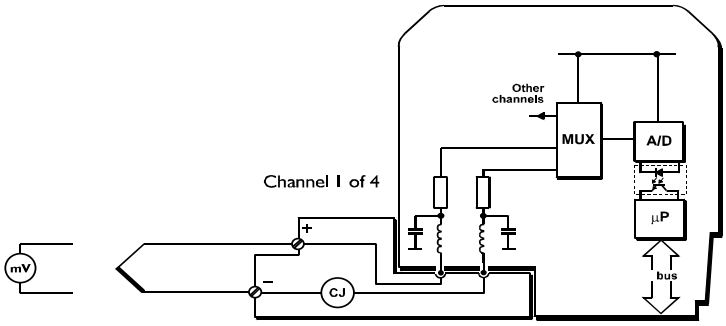

Installing a field termination assembly and an i|o module on a control carrier or module carrier is described in Section 2 Getting Started. i|o wiring is described below. Module specifications are provided at the end of this section.

WARNING

Explosion Hazard

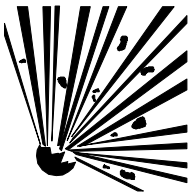

Explosion can cause death or serious injury.

In a potentially explosive atmosphere, remove power from the equipment before connecting or disconnecting power, signal, or other circuits.

All pertinent regulations regarding installation in a hazardous area must be observed.

9.3.1 i|o Wiring

Field wiring is usually organized in pairs and a pair of cable ends will be wired to the field termination assembly as shown. As the connections are stepped, the lower wire (i.e. even numbered terminals) should be cut 0.5" (12 mm) shorter than the upper wire.

1. Trim back the insulation on each conductor 1/4" (6 mm).
2. Check for correct terminal number. See the field termination assembly channel pattern at right.
3. Insert the conductor and tighten the screw. Do not over tighten.
4. Connect the cable shield to the earthing bar along the edge of the carrier. (The shield at the field end should not be grounded).

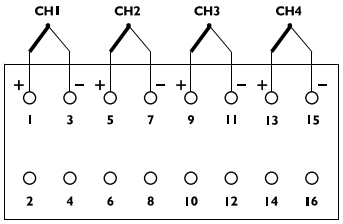

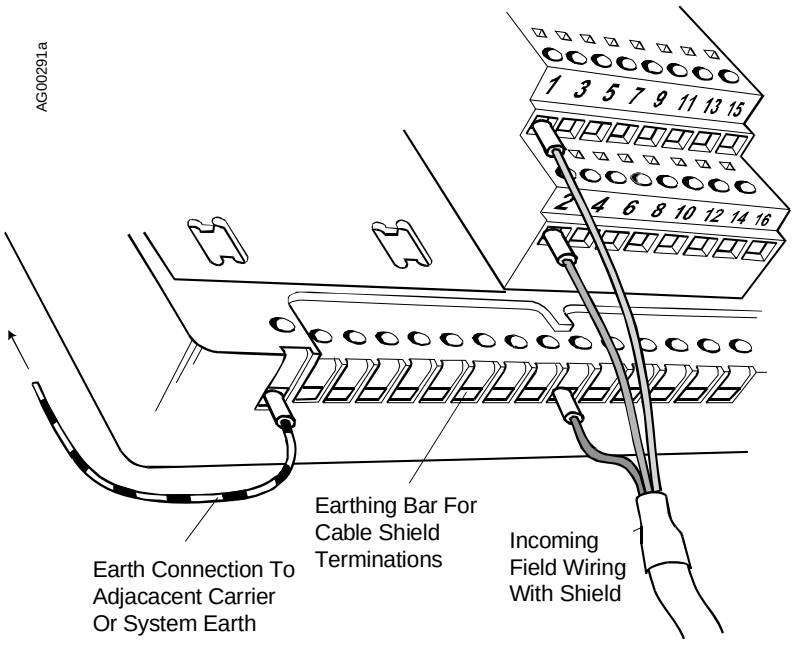

Typical i|o Cable Connection Method

9.3.2 Channel "STATUS" LED

ON	OFF	FLASHING
Sensor loop OK	Open circuit sensor and channel inactive	Open circuit sensor and channel active OR Error condition

An error (flashing LED) could be as a result of an error in the A/D converter.

9.3.3 Specifications

See Section 15 Model Designations and System Specifications for environmental specifications.

Inputs

Number of channels..... 4
Input type
TCs..... B, E, J, K, N, R, S, or T to EN 60584-2, IEC 584-2, BS4937; W_3 and W_5.
mV..... mV input
I/P signal span (autoranging) x10 gain..... ± 120 mV
x20 gain..... ± 60 mV
x50 gain..... ± 24 mV
Calibration accuracy
mV input..... ± 0.2% of span (–40 to + 70° C)
± 0.1% of span (+10 to + 40° C)
TC input..... dependent on thermocouple type
Cold junction compensation error..... < ± 1° C (–40 to +70° C)
Resolution..... 15 bits plus sign bit

Common mode rejection ..... >80 dB @ 50/60 Hz
Series mode rejection..... >40 dB @ 50/60 Hz
Maximum input voltage..... ± 4.0V
Common mode voltage between channels..... ± 4.5V (maximum)
Isolation (any channel to Ubus)..... 250 Vac rms
Open circuit bleed current ..... ± 0.5 µA (nominal)

Configurable Parameters

Sensor type ..... user selectable
Input dead zone (hysteresis) ..... user defined value
Drive on fail-safe ..... disabled/upscale/downscale

Mounting

Control Carrier..... YES
Module Carrier ..... YES

Response Times

Signal change to availability on Ubus ..... 420 ms (maximum)
O/C sensor detection..... ≤ 10 s

Power Supplies

Ubus (12V) current..... 150 mA (typical); 200 mA (maximum)
Bussed Field Power ..... not required

Mechanical

Module Key Code..... C1
Module width..... 1.7" (42 mm)
Weight ..... 7.1 oz (200 g)

Field Terminals

Recommended Field Terminal ..... iO-STC-FT-CJ compensated

9.3.4 Where to Go Next

Install remaining field termination assemblies and i|o modules (See Sections 9.3 through 9.22 for each i|o module to be installed.)

Connect i|station (See Section 10 i|Station Installation.)

■

9.4 MODEL IO-4RT MODULE

This 4-channel RTD and OHM input module provides four inputs for RTDs or resistance sources. The function of the module is set up during configuration. 2-wire, 3-wire and 4-wire RTD types are accommodated.

Installing a field termination assembly and an i|o module on a control carrier or module carrier is described in Section 2 Getting Started. I|o wiring is described below. Module specifications are provided at the end of this section.

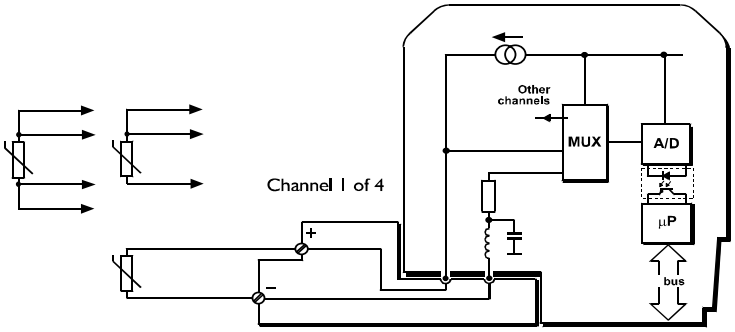

IMPORTANT

Use only the recommended field terminals with this module.

WARNING

Explosion Hazard

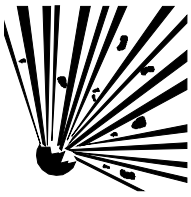

Explosion can cause death or serious injury.

In a potentially explosive atmosphere, remove power from the equipment before connecting or disconnecting power, signal, or other circuits.

All pertinent regulations regarding installation in a hazardous area must be observed.

9.4.1 i|o Wiring

Field wiring is usually organized in pairs and a pair of cable ends will be wired to the field termination assembly as shown:

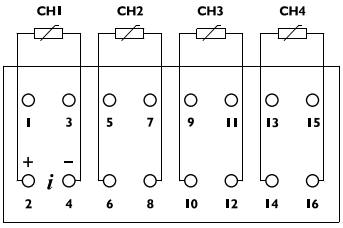

RTD (2-wire connections)

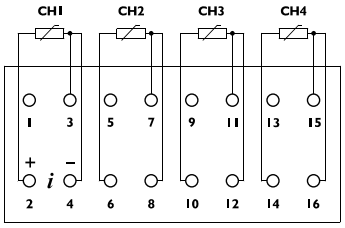

RTD (3-wire connections)

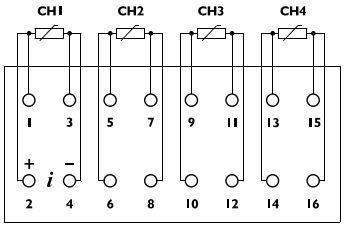

RTD (4-wire connections)

As the connections are stepped, the lower wire (i.e. even numbered terminals) should be cut 0.5" (12 mm) shorter than the upper wire.

1. Trim back the insulation on each conductor 1/4" (6 mm).
2. Check for correct terminal number. See the field termination assembly channel pattern above.
3. Insert the conductor and tighten the screw. Do not over tighten.

4. Connect the cable shield to the earthing bar along the edge of the carrier. (The shield at the field end should not be grounded.)

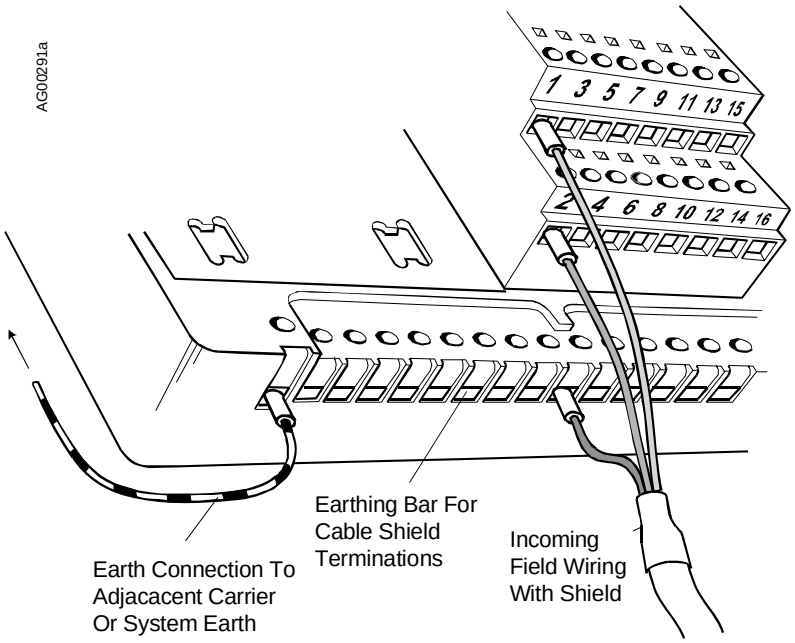

Typical i|o Cable Connection Method

9.4.2 Channel "STATUS" LED

ON	OFF	FLASHING
Sensor loop OK	Open circuit sensor and channel inactive	Open circuit sensor and channel active OR Error condition

An error (flashing LED) could be due to an error in the A/D converter

9.4.3 Specifications

See Section 15 Model Designations and System Specifications for environmental specifications.

Inputs

Number of channels 4
Input type
RTDs ..... Pt100 to BS1904/DIN43760/IEC 75
2, 3 or 4 wire ..... Ni120; jPt100 to JIS C1604: 1989
R ..... Resistance
Input resistance range (span) ..... 0 to 500 Ω
Calibration accuracy ..... ± 1.0 Ω (–40 to +70° C)
± 0.5 Ω (+10 to +40° C)
RTD excitation current ..... 200 µA (nominal)
Resolution ..... 15 bits plus sign bit
Common mode rejection ..... >80 dB @ 50/60 Hz
Series mode rejection ..... >40 dB @ 50/60 Hz
Isolation (any channel to Ubus) ..... 250 Vac rms
Open circuit bleed current ..... 0.5 µA (nominal)

Configurable Parameters

Sensor type ..... user selectable
Input deadband (hysteresis) ..... user defined value
Drive on o/c fault ..... disabled/upscale

Mounting

Control Carrier ..... YES
Module Carrier ..... YES

Response Times

Signal change to availability on Ubus ..... 840 ms (maximum)
O/C sensor detection ..... ≤ 10 s

Power Supplies

Ubus (12V) current ..... 150 mA (typical)
200 mA (maximum)
Bussed Field Power ..... not required

Mechanical

Module Key Code C3
Module width ..... 1.7" (42 mm)
Weight ..... 7.1 oz (200 g)

Field Terminals

Recommended Field Terminals ..... iO-SRT-FT RTD

9.4.4 Where to Go Next

Install remaining field termination assemblies and i|o modules (See Sections 9.3 through 9.22 for each i|o module to be installed.)

Connect i|station (See Section 10 i|Station Installation.)

■

9.5 MODEL IO-8AI-2 MODULE

This 8-channel analog input module provides eight single-ended input channels for conventional 4–20 mA, 2- or 4-wire transmitters.

AI modules provide digitized data and status information from 4–20 mA current loop sensors.

Installing a field termination assembly and an i|o module on a control carrier or module carrier is described in Section 2 Getting Started. i|o wiring is described below. Module specifications are provided at the end of this section.

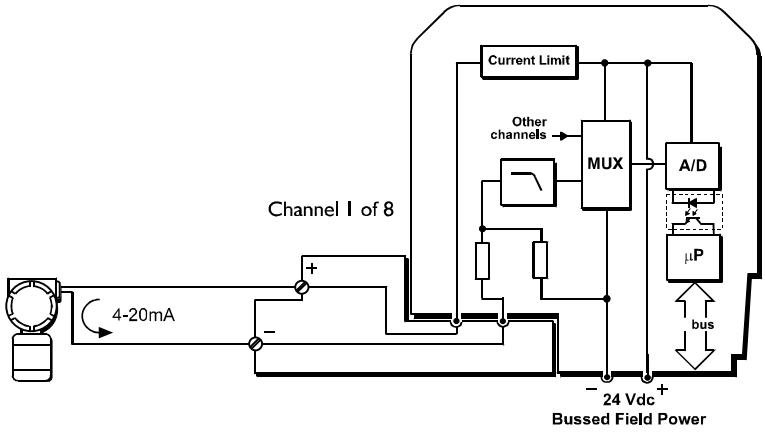

IMPORTANT

Bussed field power at 24 Vdc ±10% is required for this module. If module is to be installed on a module carrier, see Section 8.2 Model iO-(4/8)MC for wiring details.

WARNING

Explosion Hazard

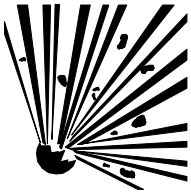

Explosion can cause death or serious injury.

In a potentially explosive atmosphere, remove power from the equipment before connecting or disconnecting power, signal, or other circuits.

All pertinent regulations regarding installation in a hazardous area must be observed.

9.5.1 i|o Wiring

Field wiring is usually organized in pairs and a pair of cable ends will be wired to the field termination assembly as shown. As the connections are stepped, the lower wire (i.e. even numbered terminals) should be cut 0.5" (12 mm) shorter than the upper wire.

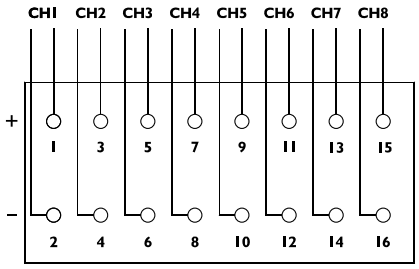

1. Trim back the insulation on each conductor 1/4" (6 mm).
2. Check for correct terminal number. See the field termination assembly channel pattern at right.
3. Insert the conductor and tighten the screw. Do not over tighten.
4. Connect the cable shield to the earthing bar along the edge of the carrier. (The shield at the field end should not be grounded.)

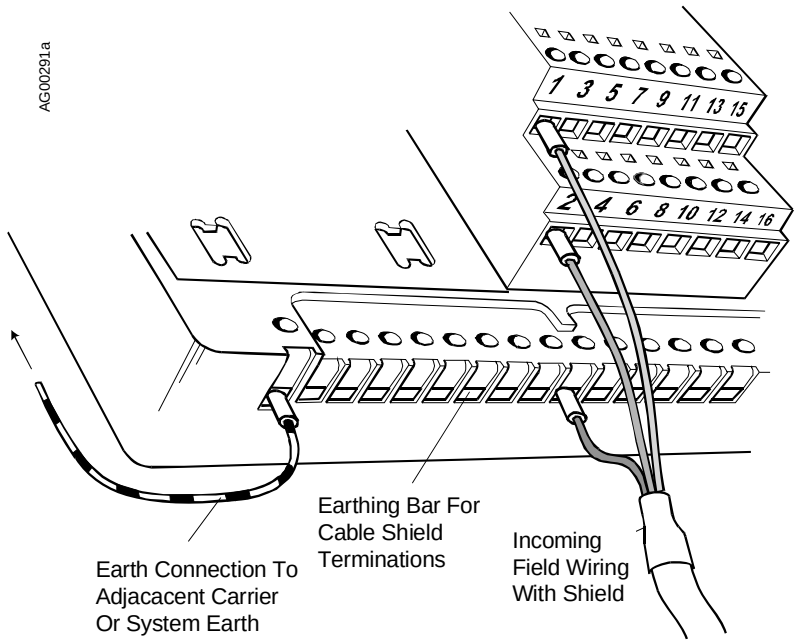

Typical i|o Cable Connection Method

9.5.2 Channel "STATUS" LED

ON	OFF	FLASHING
Sensor loop OK	Open circuit sensor and channel inactive	Open circuit sensor and channel active OR Error condition

An error (flashing LED) could be a result of an A/D converter error.

9.5.3 Specifications

See Section 15 Model Designations and System Specifications for environmental specifications.

Inputs

Number of channels..... 8, single-ended
Nominal signal range (span)..... 4 to 20 mA
Full signal range ..... 1 to 23 mA
Line fault detection
Short circuit current..... >23.5 mA
Open circuit current..... <0.5 mA
Output voltage (@ 20mA)..... 13.5 V (min.)
Output current ..... 32 mA (maximum)
Accuracy (over temp range) ..... ± 0.1% of span
Resolution..... 16 bits
Repeatability..... 0.05% of span
Isolation (any channel to Ubus)..... 100 Vac
(between channels)..... none

Configurable Parameters

Refer to Section 4 Function Blocks for configurable parameters.

Mounting

Control Carrier..... YES
Module Carrier ..... YES

Power Supplies

Ubus (12V) current..... 100 mA (typical)
150 mA (maximum)
Bussed Field Power ..... 300 mA maximum @ 24 Vdc ±10%
Quiescent current (for external powered inputs) ..... 60 mA

Mechanical

Module Key Code..... A1
Weight ..... 7.1 oz (200 g)

Field Terminals (2-Wire Transmitter)

Recommended Field Terminals..... iO-SST8-FT (unfused)
Compatible Field Terminals ..... iO-FST8-FT (fused)

Field Terminals (4-Wire Transmitter)

Recommended Field Terminals..... iO-S4W8-FT

9.5.4 Where to Go Next

Install remaining field termination assemblies and i|o modules (See Sections 9.3 through 9.22 for each i|o module to be installed.)

Connect i|station (See Section 10 i|Station Installation.)

■

9.6 MODEL IO-8AI-V MODULE

This 8-channel analog input module provides eight single-ended input channels for conventional 1-5 Vdc input signals.

AI modules provide digitized data and status information from 1-5 Vdc sensors.

Installing a field termination assembly and an i|o module on a control carrier or module carrier is described in Section 2 Getting Started. i|o wiring is described below. Module specifications are provided at the end of this section.

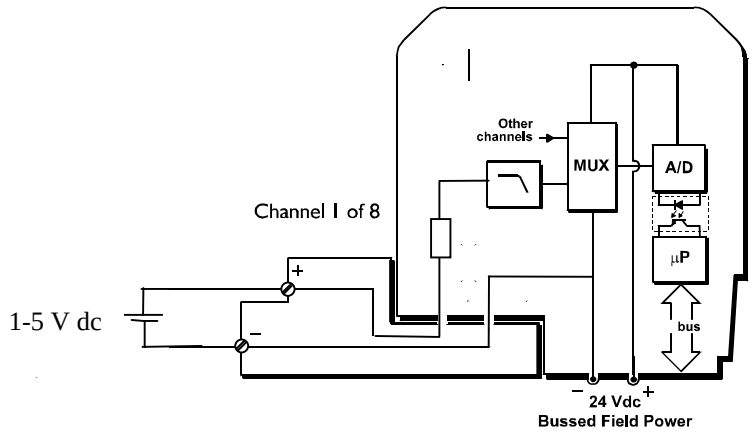

IMPORTANT

Bussed field power at 24 Vdc ±10% is required for this module. If module is to be installed on a module carrier, see Section 8.2 Model iO-(4/8)MC for wiring details.

WARNING

Explosion Hazard

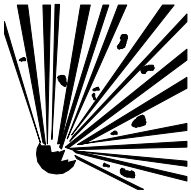

Explosion can cause death or serious injury.

In a potentially explosive atmosphere, remove power from the equipment before connecting or disconnecting power, signal, or other circuits.

All pertinent regulations regarding installation in a hazardous area must be observed.

9.6.1 i|o Wiring

Field wiring is usually organized in pairs and a pair of cable ends will be wired to the field termination assembly as shown. As the connections are stepped, the lower wire (i.e. even numbered terminals) should be cut 0.5" (12 mm) shorter than the upper wire.

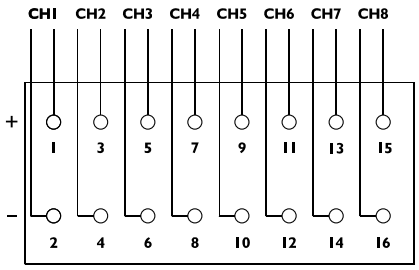

1. Trim back the insulation on each conductor 1/4" (6 mm).
2. Check for correct terminal number. See the field termination assembly channel pattern at right.
3. Insert the conductor and tighten the screw. Do not over tighten.
4. Connect the cable shield to the earthing bar along the edge of the carrier. (The shield at the field end should not be grounded.)

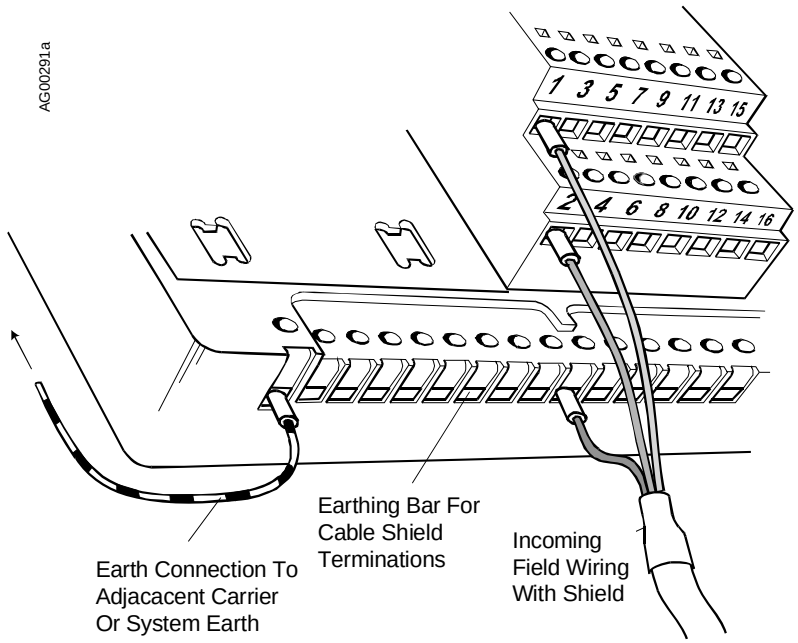

Typical i|o Cable Connection Method

9.6.2 Channel "STATUS" LED

ON	OFF	FLASHING
Sensor loop OK	Open circuit sensor and channel inactive	Open circuit sensor and channel active OR Error condition

An error (flashing LED) could be as a result of a loss of HART signal or an A/D converter error.

9.6.3 Specifications

See Section 15 Model Designations and System Specifications for environmental specifications.

Inputs

Number of channels..... 8, single-ended
Nominal signal range (span)..... 1 to 5 Vdc
Full signal range ..... 0.19 to 5.64 Vdc
Out of range detection
Lower Threshold ..... < 0.19 Vdc
Upper Threshold..... > 5.64 Vdc
Accuracy (over temp range) ..... ± 0.1% of span
Resolution..... 16 bits
Repeatability..... 0.05% of span
Isolation (any channel to Ubus)..... 100 Vac
(between channels)..... none

Configurable Parameters

Refer to Section 4 Function Blocks for configurable parameters.

Mounting

Control Carrier..... YES
Module Carrier ..... YES

Power Supplies

Ubus (12V) current..... 100 mA (typical)
150 mA (maximum)
Bussed Field Power ..... 60 mA maximum @ 24 Vdc ±10%

Mechanical

Module Key Code..... A1
Weight ..... 7.1 oz (200 g)

Field Terminals

Recommended Field Terminals..... iO-S4W8-FT

9.6.4 Where to Go Next

Install remaining field termination assemblies and i|o modules (See Sections 9.3 through 9.22 for each i|o module to be installed.)

Connect i|station (See Section 10 i|Station Installation.)

■

9.7 MODEL IO-8AI-2H MODULE

This 8-channel analog input module provides eight single-ended input channels for conventional 4–20 mA, or HART compatible, 2- or 4-wire transmitters.

AI modules provide digitized data and status information from 4–20 mA current loop sensors. The HART module communicates only with HART instruments of protocol revision 5.0 or later.

Installing a field termination assembly and an i|o module on a control carrier or module carrier is described in Section 2 Getting Started. Connections for 2-wire and 4-wire transmitters are shown in Figure 9-24 on the next page. i|o wiring is described below. Module specifications are provided at the end of this section.

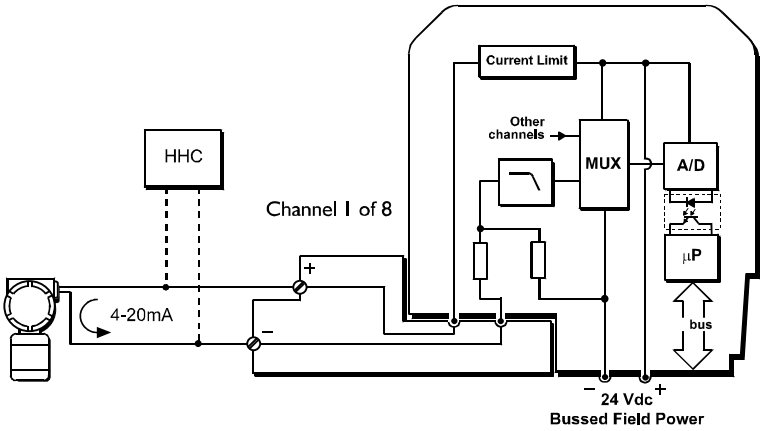

IMPORTANT

Bussed field power at 24 Vdc ±10% is required for this module. If the module is to be installed on a module carrier, see Section 8.2 Model iO-(4/8)MC for wiring details.

WARNING

Explosion Hazard

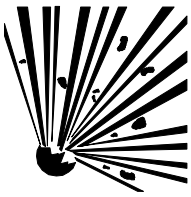

Explosion can cause death or serious injury.

In a potentially explosive atmosphere, remove power from the equipment before connecting or disconnecting power, signal, or other circuits.

All pertinent regulations regarding installation in a hazardous area must be observed.

9.7.1 i|o Wiring

Field wiring is usually organized in pairs and a pair of cable ends will be wired to the field termination assembly as shown. As the connections are stepped, the lower wire (i.e. even numbered terminals) should be cut 0.5" (12 mm) shorter than the upper wire; see Typical i|o Cable Connection Method drawing later in this section.

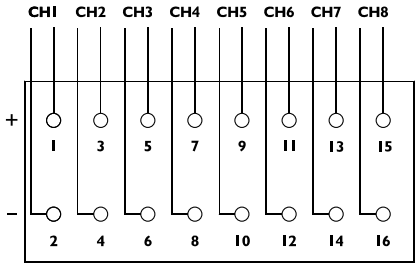

A field terminal assembly may be wired before it is installed on a carrier and cable shields connected to the shield earthing bar after the assembly is mounted.

1. Trim back the insulation on each conductor 1/4" (6 mm).
2. Check for correct terminal number. See the field termination assembly channel pattern at right.
3. Insert the conductor and tighten the screw. Do not over tighten.
4. Connect the cable shield to the earthing bar along the edge of the carrier. (The shield at the field end should not be grounded.)

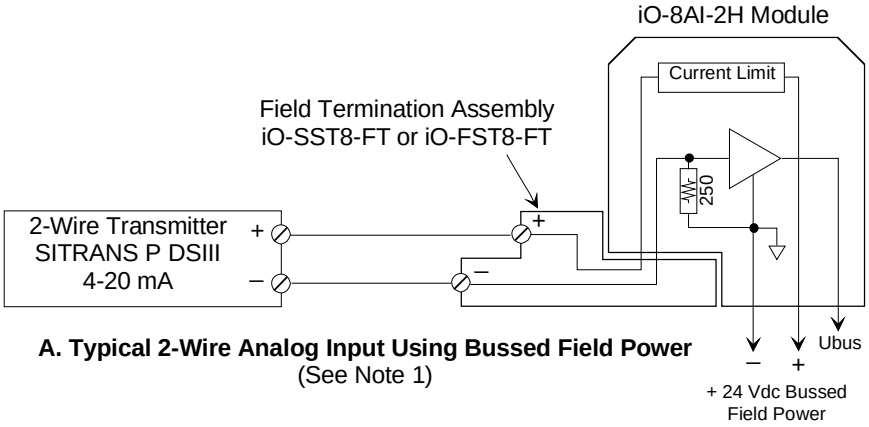

A. Typical 2-Wire Analog Input Using Bussed Field Power
(See Note 1)

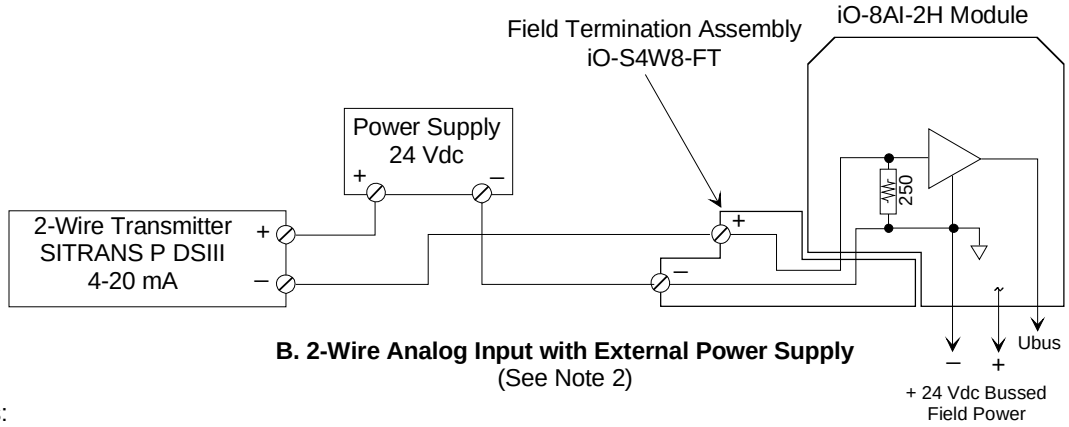

B. 2-Wire Analog Input with External Power Supply
(See Note 2)

Notes:

1. All 8 channels of a module must be wired for 2-wire operation using the 24 Vdc bussed field power.

2. An external DC power supply must either be completely isolated or the negative terminal connected to the same single point system common as the 24 Vdc bussed field power.

3. The power source must be isolated from the 4-20 mA output of the transmitter. Typically, 4-wire transmitters that are powered from an AC source are isolated by design but when powered by DC supplies may not be isolated. Power source to transmitter ground not shown.

AG00331b

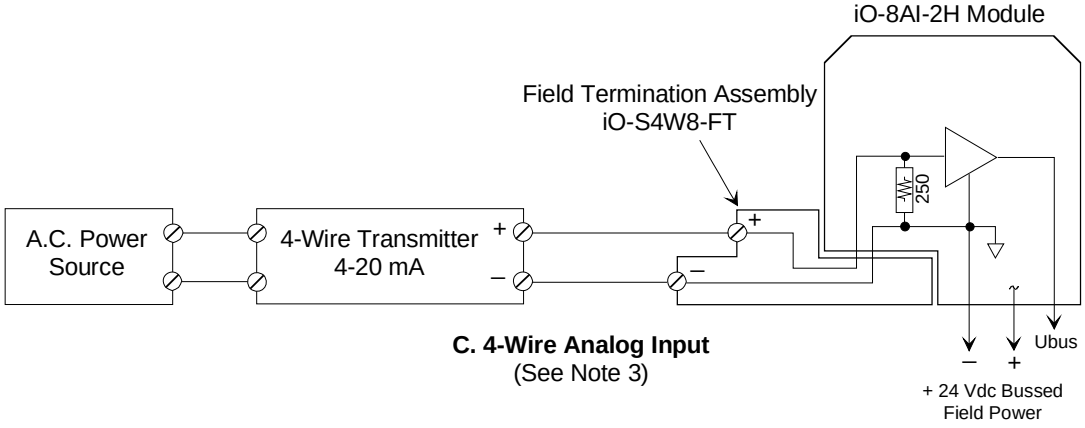

C. 4-Wire Analog Input
(See Note 3)

FIGURE 9-24 Connections for 2-Wire and 4-Wire Transmitters

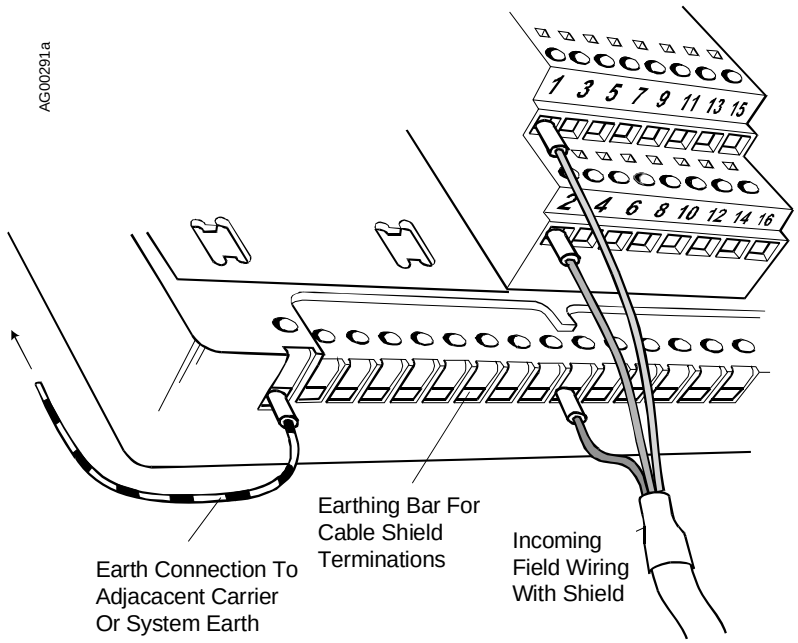

Typical i|o Cable Connection Method

9.7.2 Channel "STATUS" LED

ON	OFF	FLASHING
Sensor loop OK	Open circuit sensor and channel inactive	Open circuit sensor and channel active OR Error condition

An error (flashing LED) could be as a result of any of the following conditions:
a) loss of HART signal
b) A/D converter error

9.7.3 Specifications

See Section 15 Model Designations and System Specifications for environmental specifications.

Inputs

Number of channels..... 8, single-ended
Nominal signal range (span)..... 4 to 20 mA
Full signal range ..... 1 to 23 mA
Line fault detection
Short circuit current..... >23.5 mA
Open circuit current..... <0.5 mA
Output voltage (@ 20mA)..... 13.5 V (min.)
Output current ..... 32 mA (maximum)
Accuracy (over temp range) ..... ± 0.1% of span
Resolution..... 16 bits
Repeatability..... 0.05% of span
Operating temperature..... 0 to +60 °C
For non-optimum orientation de-rate to ..... 0 to +40 °C
Isolation (any channel to Ubus)..... 100 Vac
(between channels)..... none

Configurable Parameters

Refer to Section 4 Function Blocks for configurable parameters.

Mounting

Control Carrier..... YES
Module Carrier ..... YES

Power Supplies

Ubus (12V) current..... 100 mA (typical)
150 mA (maximum)
Bussed Field Power ..... 300 mA maximum @ 24 Vdc ±10%
Quiescent current (for external powered inputs) ..... 60 mA

Mechanical

Module Key Code..... A1
Weight ..... 7.1 oz (200 g)

Field Terminals (2-Wire Transmitter)

Recommended Field Terminals..... iO-SST8-FT (unfused)
Compatible Field Terminals ..... iO-FST8-FT (fused)

NOTE

Refer to Table 2-1 i|o Power and Keying in Section 2 Getting Started for earlier field terminal models that have been discontinued.

Field Terminals (4-Wire Transmitter)

Recommended Field Terminals..... iO-S4W8-FT

®HART is a registered trademark of the HART Communications Foundation.

9.7.4 Where to Go Next

Install remaining field termination assemblies and i|o modules (See Sections 9.3 through 9.22 for each i|o module to be installed.)

Connect i|station (See Section 10 i|Station Installation.)

■

9.8 MODEL IO-8AO MODULE

This 8-channel analog output module provides eight single-ended 4-20 mA outputs for loads such as I/P converters and remote indicators. Open circuit detection is provided on each channel.

Installing a field termination assembly and an i|o module on a control carrier or module carrier is described in Section 2 Getting Started. i|o wiring is described below. Module specifications are provided at the end of this section.

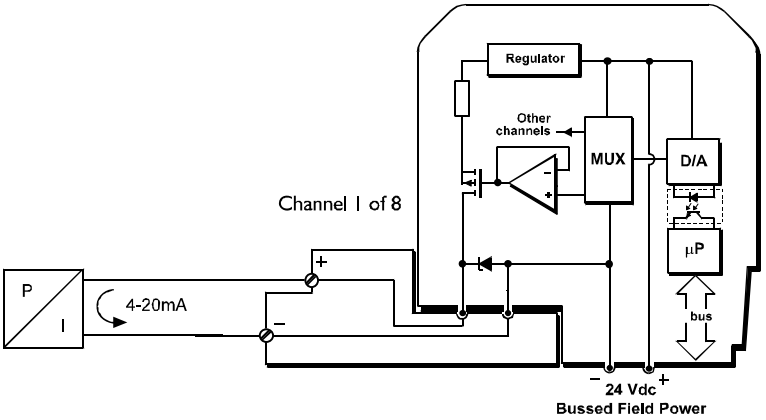

IMPORTANT

Bussed field power at 24 Vdc ±10% is required for this module. If module will be installed on a module carrier, refer to Section 8.2 Model iO-(4/8)MC for wiring details.

WARNING

Explosion Hazard

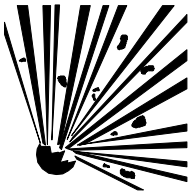

Explosion can cause death or serious injury.

In a potentially explosive atmosphere, remove power from the equipment before connecting or disconnecting power, signal, or other circuits.

All pertinent regulations regarding installation in a hazardous area must be observed.

9.8.1 i|o Wiring

Field wiring is usually organized in pairs and a pair of cable ends will be wired to the field termination assembly as shown. As the connections are stepped, the lower wire (i.e. even numbered terminals) should be cut 0.5" (12 mm) shorter than the upper wire.

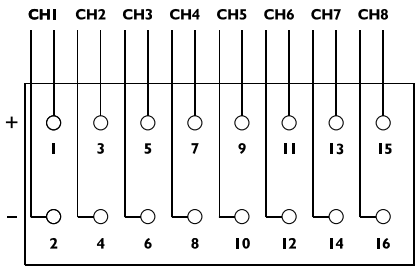

1. Trim back the insulation on each conductor 1/4" (6 mm).
2. Check for correct terminal number. See the field termination assembly channel pattern at right.
3. Insert the conductor and tighten the screw. Do not over tighten.
4. Connect the cable shield to the earthing bar along the edge of the carrier. (The shield at the field end should not be grounded.)

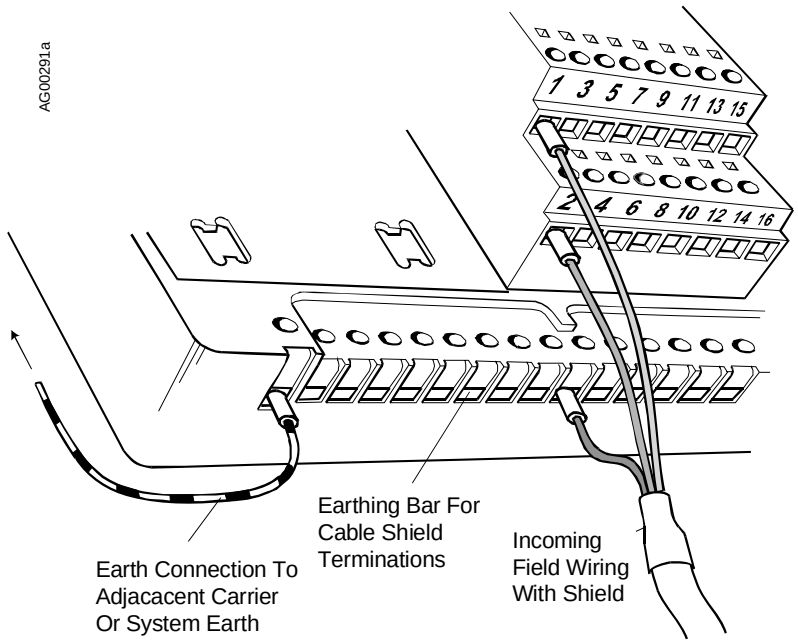

Typical i|o Cable Connection Method

9.8.2 Channel "STATUS" LED (Yellow)

ON	OFF	FLASHING
Field circuit OK	Open circuit field loop and channel inactive	Open circuit field loop and channel active OR Error condition

An error condition (flashing LED) could be as the result of an error in the A/D converter or an open circuit.

9.8.3 Specifications

See Section 15 Model Designation and System Specifications for environmental specifications.

Outputs

Number of channels..... 8, single ended
Nominal signal range (span)..... 4 to 20 mA
Full signal output range..... 1 to 23 mA
Open loop detection threshold..... 0.7 ± 0.25 mA
Output compliance..... 20 mA at 21.6 Vdc supply (into 700 Ω load)
Accuracy (over temp range)..... ± 0.25% of span
Output ripple..... < 0.02% of span
Resolution..... 12 bits
Operating temperature..... 0 to +60 °C
For non-optimum orientation de-rate to..... 0 to +40 °C
Isolation (any channel to Ubus)..... 100 Vac

Configurable Parameters

FailSafe Mode ..... Last/Set
Fail Safe Value ..... 0-25 mA

Mounting

Control Carrier..... YES
Module Carrier ..... YES

Power Supplies

Ubus (12V) current..... 100 mA (typical)
150 mA (maximum)
Bussed Field Power ..... 300 mA (maximum) @ 24 Vdc ± 10%
Quiescent current..... 60 mA

Mechanical

Module Key Code..... A4
Module width..... 1.7" (42 mm)
Weight ..... 7.1 oz (200 g)

Field Terminals

Recommended Field Terminal ..... iO-SST8-FT (unfused)
Compatible Field Terminal..... iOFST8-FT (fused)

NOTE

Refer to Table 2-1 i|o Power and Keying table in Section 2 Getting Started for earlier field terminal models that have been discontinued.

9.8.4 Where to Go Next

Install remaining field termination assemblies and i|o modules (See Sections 9.3 through 9.22 for each i|o module to be installed.)

Connect i|station (See Section 10 i|Station Installation.)

■

9.9 MODEL IO-8AO-H MODULE

This 8-channel analog output module provides eight single-ended 4-20 mA outputs for loads such as I/P converters and remote indicators. The HART module communicates with HART instruments of protocol 5.0 or later. Open circuit detection is provided on each channel.

Installing a field termination assembly and an i|o module on a control carrier or module carrier is described in Section 2 Getting Started. i|o wiring is described below. Module specifications are provided at the end of this section.

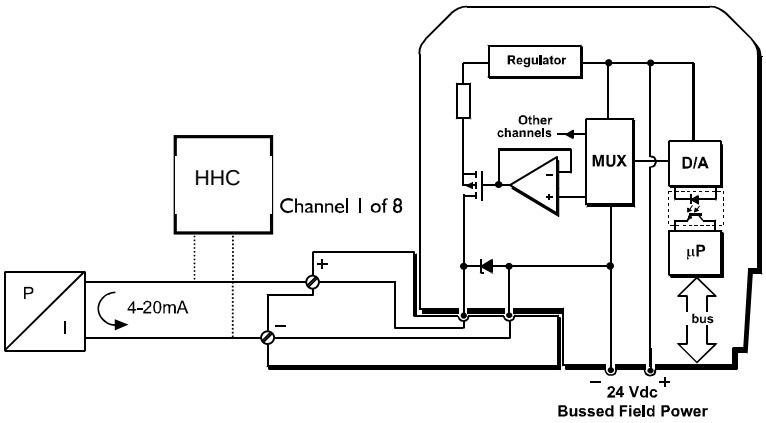

IMPORTANT

Bussed field power at 24 Vdc ±10% is required for this module. If module will be installed on a module carrier, refer to Section 8.2 Model iO-(4/8)MC for wiring details.

WARNING

Explosion Hazard

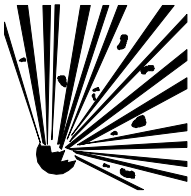

Explosion can cause death or serious injury.

In a potentially explosive atmosphere, remove power from the equipment before connecting or disconnecting power, signal, or other circuits.

All pertinent regulations regarding installation in a hazardous area must be observed.

9.9.1 i|o Wiring

Field wiring is usually organized in pairs and a pair of cable ends will be wired to the field termination assembly as shown. As the connections are stepped, the lower wire (i.e. even numbered terminals) should be cut 0.5" (12 mm) shorter than the upper wire.

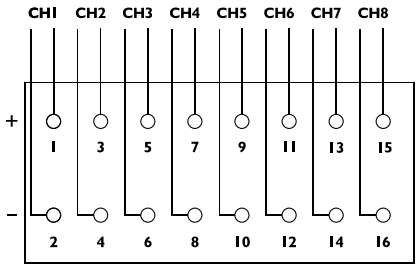

1. Trim back the insulation on each conductor 1/4" (6 mm).
2. Check for correct terminal number. See the field termination assembly channel pattern at right.
3. Insert the conductor and tighten the screw. Do not over tighten.
4. Connect the cable shield to the earthing bar along the edge of the carrier. (The shield at the field end should not be grounded.)

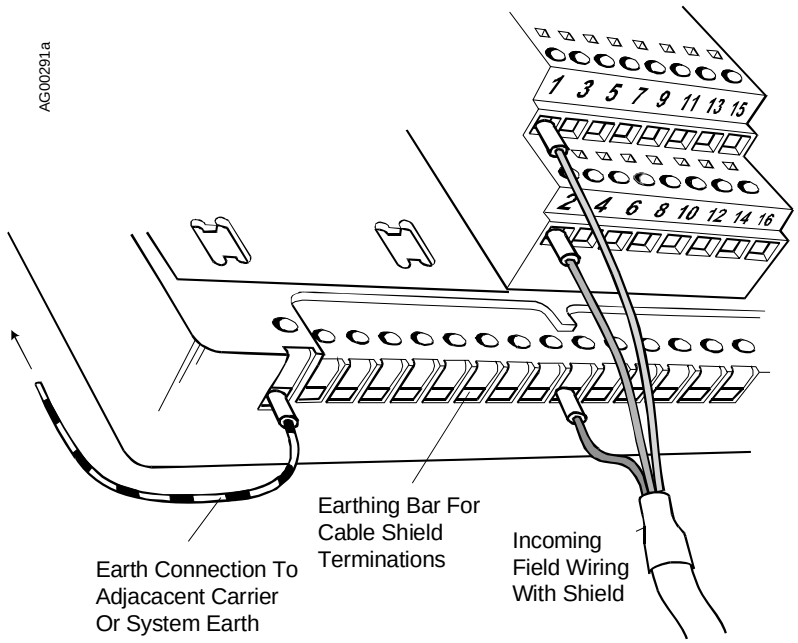

Typical i|o Cable Connection Method

9.9.2 Channel "STATUS" LED (Yellow)

ON	OFF	FLASHING
Field circuit OK	Open circuit field loop and channel inactive	Open circuit field loop and channel active OR Error condition

An error condition (flashing LED) could be due to an error in the A/D converter, an open circuit, or a HART communication error

9.9.3 Specifications

See Section 15 Model Designation and System Specifications for environmental specifications.

Outputs

Number of channels..... 8, single ended
Nominal signal range (span)..... 4 to 20 mA
Full signal output range..... 1 to 23 mA
Open loop detection threshold..... 0.7 ± 0.25 mA
Output compliance..... 20 mA at 21.6 Vdc supply (into 700 Ω load)
Accuracy (over temp range) ..... ± 0.25% of span
Resolution..... 12 bits
Isolation (any channel to Ubus)..... 100 Vac

Configurable Parameters

Refer to Section 4 Function Blocks for configurable parameters.

Mounting

Control Carrier..... YES
Module Carrier ..... YES

Power Supplies

Ubus (12V) current..... 100 mA (typical)
150 mA (maximum)
Bussed Field Power ..... 300 mA (maximum) @ 24 Vdc ± 10%

Mechanical

Module Key Code..... A4
Module width..... 1.7" (42 mm)
Weight ..... 7.1 oz (200 g)

Field Terminals

Recommended Field Terminal ..... iO-SST8-FT (unfused)
Compatible Field Terminal..... iOFST8-FT (fused)

9.9.4 Where to Go Next

Install remaining field termination assemblies and i|o modules (See Sections 9.3 through 9.22 for each i|o module to be installed.)

Connect i|station (See Section 10 i|Station Installation.)

■

9.10 MODEL IO-8DI24DMN MODULE

This 8-channel discrete input, 24 Vdc non-isolated module receives eight discrete inputs for dry contact switches. The module provides 24 Vdc power to the high side of each input, with the returns commoned internally. The module also has a pulse counting option that can provide a total of input pulses for each of the channels.

Installing a field termination assembly and an i|o module on a control carrier or module carrier is described in Section 2 Getting Started. i|o wiring is described below. Module specifications are provided at the end of this section.

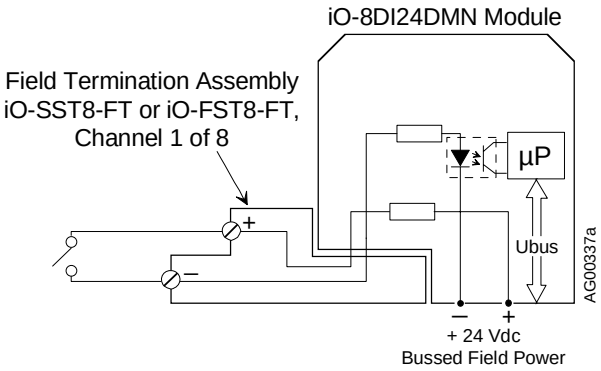

IMPORTANT

Bussed field power at 24 Vdc ±10% is required for this module. If module is to be mounted on a module carrier, see Section 8.2 Model iO-(4/8)MC for wiring details.

WARNING

Explosion Hazard

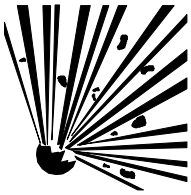

Explosion can cause death or serious injury.

In a potentially explosive atmosphere, remove power from the equipment before connecting or disconnecting power, signal, or other circuits.

All pertinent regulations regarding installation in a hazardous area must be observed.

9.10.1 i|o Wiring

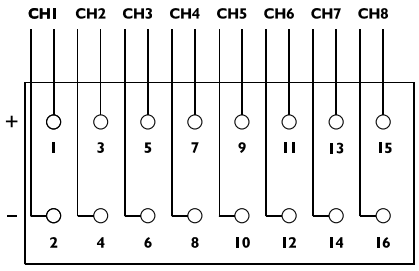

Field wiring is usually organized in pairs and a pair of cable ends will be wired to the field termination assembly as shown. As the connections are stepped, the lower wire (i.e. even numbered terminals) should be cut 0.5" (12 mm) shorter than the upper wire.

1. Trim back the insulation on each conductor 1/4" (6 mm).
2. Check for correct terminal number. See the field termination assembly channel pattern at right.
3. Insert the conductor and tighten the screw. Do not over tighten.
4. Connect the cable shield to the earthing bar along the edge of the carrier. (The shield at the field end should not be grounded.)

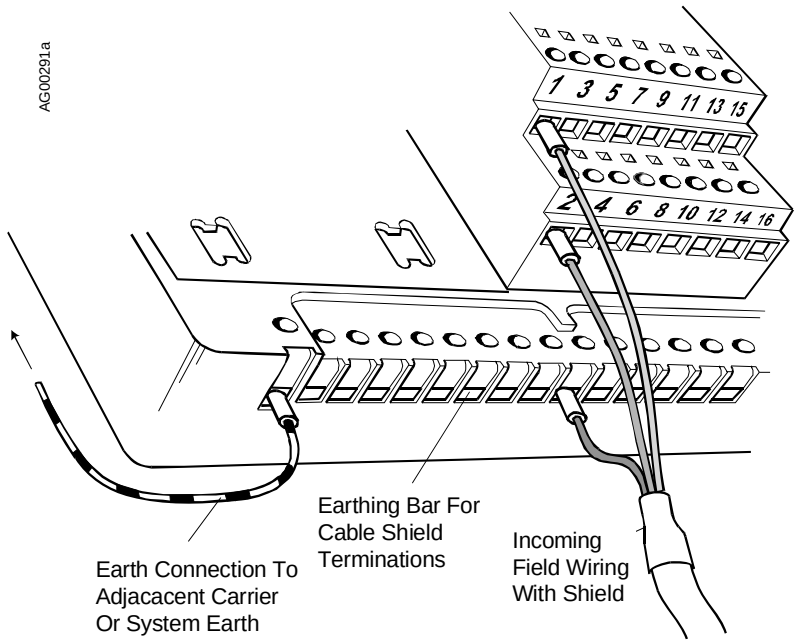

Typical i|o Cable Connection Method

9.10.2 Channel "STATUS" LED

ON	OFF	FLASHING
Sensor loop OK	Open circuit sensor and channel inactive	Open circuit sensor and channel active OR Error condition

An error (flashing LED) could be as a result of an error in the A/D converter

9.10.3 Specifications

See Section 15 Model Designations and System Specifications for environmental specifications.

Inputs

Number of channels..... 8
OFF current ..... < 0.69 mA
ON current..... > 2.24 mA
Wetting current..... 5 mA (typical)
Minimum pulse width detected ..... 1 ms
Maximum switching frequency (no filtering)..... 250 Hz
Isolation (any channel to Ubus) ..... 250 Vac

Configurable Parameters

Selectable timeout filter..... 0 to 512 ms
Pulse counting ..... off/on (up to 65,536 counts)
Latched/unlatched inputs..... off/on

Mounting

Control Carrier..... YES
Module Carrier ..... YES

Power Supplies

Ubus (12V) current..... 60 mA (typical)
75 mA (maximum)
Bussed Field Power ..... 40 mA @ 18-36 Vdc

Mechanical

Module Key Code..... B1
Module width..... 1.7" (42 mm)
Weight ..... 6.0 oz (170 g)

Field Terminals

Recommended Field Terminal ..... iO-SST8-FT (unfused)*
Compatible Field Terminal..... iO-FST8-FT (fused)

NOTE

Refer to Table 2-1 i|o Power and Keying in Section 2 Getting Started for earlier field terminal models that have been discontinued.

*User supplied fusing of the Bussed Field Power supply is recommended.

9.10.4 Where to Go Next

Install remaining field termination assemblies and i|o modules (See Sections 9.3 through 9.22 for each i|o module to be installed.)

Connect i|station (See Section 10 i|Station Installation.)

■

9.11 MODEL IO-8DI24DSI MODULE

This 8-channel discrete input, 24 Vdc sinking isolated module receives eight discrete inputs from 24 Vdc field voltage sources. The input voltage is compared to the required threshold and a true or false condition generated. Input channels are isolated from each other and from the internal Ubus. The module has a pulse counting option that can provide a total of input pulses for each of the channels.

Installing a field termination assembly and an i|o module on a control carrier or module carrier is described in Section 2 Getting Started. Field termination wiring is described below. Module specifications are provided at the end of the section.

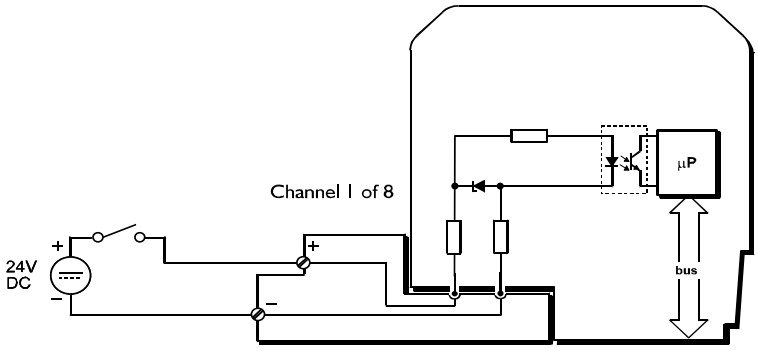

WARNING

Explosion Hazard

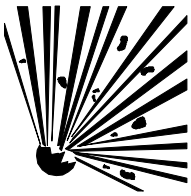

Explosion can cause death or serious injury.

In a potentially explosive atmosphere, remove power from the equipment before connecting or disconnecting power, signal, or other circuits.

All pertinent regulations regarding installation in a hazardous area must be observed.

9.11.1 i|o Wiring

Field wiring is usually organized in pairs and a pair of cable ends will be wired to the field termination assembly as shown. As the connections are stepped, the lower wire (i.e. even numbered terminals) should be cut 0.5" (12 mm) shorter than the upper wire.

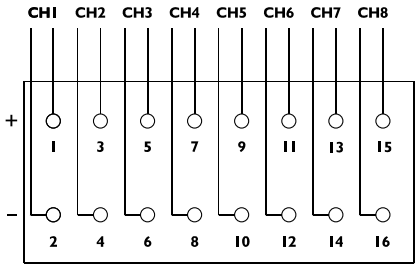

1. Trim back the insulation on each conductor 1/4" (6 mm).
2. Check for correct terminal number. See the field termination assembly channel pattern at right.
3. Insert the conductor and tighten the screw. Do not over tighten.
4. Connect the cable shield to the earthing bar along the edge of the carrier. (The shield at the field end should not be grounded.)

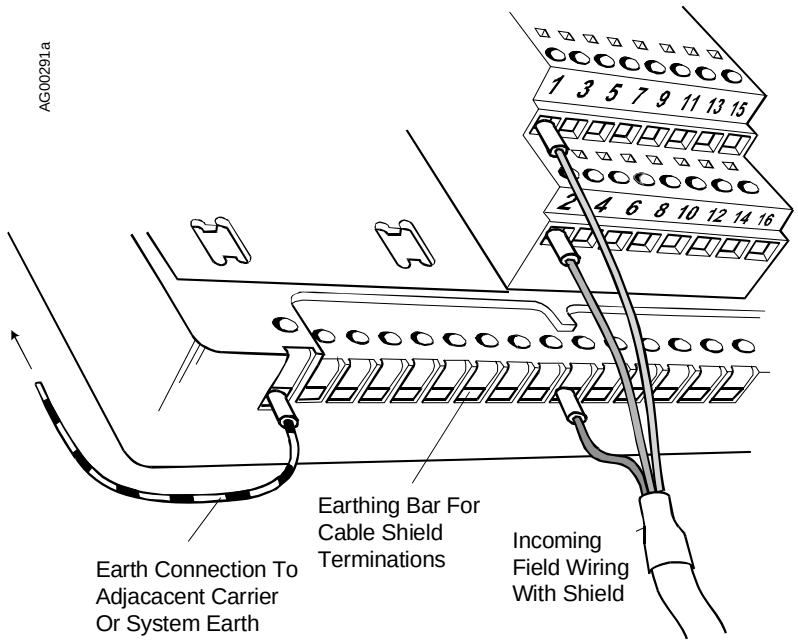

Typical i|o Cable Connection Method

9.11.2 Channel "STATUS" LED

ON	OFF	FLASHING
Sensor loop OK	Open circuit sensor and channel inactive	Open circuit sensor and channel active OR Error condition

An error (flashing LED) could be as a result of an error in the A/D converter

9.11.3 Specifications

See Section 15 Model Designations and System Specifications for environmental specifications.

Inputs

Number of channels..... 8
OFF voltage..... 3.2 Vdc
ON voltage..... > 11 Vdc
Wetting current..... 5 mA (nominal) @ 24 Vdc
Minimum pulse width detected ..... 1 ms
Maximum switching frequency (no-filtering) ..... 250 Hz
Maximum voltage
Input..... 30 Vdc
Reverse input ..... –25 Vdc

Configurable Parameters

Selectable timeout filter ..... 0 to 512 ms
Pulse counting ..... off /on (up to 65,536 counts)
Latched/unlatched inputs ..... off /on

Mounting

Control Carrier ..... YES
Module Carrier ..... YES

Power Supplies

Ubus (12V) current ..... 60 mA (typical)
75 mA (maximum)
Bussed Field Power ..... not required

Mechanical

Module Key Code B2
Module width ..... 1.7" (42 mm)
Weight ..... 6.0 oz (170 g)

Field Terminals

Recommended Field Terminal ..... iO-SST8-FT (unfused)*
Compatible Field Terminal ..... iO-FST8-FT (fused)

NOTE

Refer to Table 2-1 i|o Power and Keying in Section 2 Getting Started for earlier field terminal models that have been discontinued.

*User supplied fusing of the Field Power supply is recommended.

9.11.4 Where to Go Next

Install remaining field termination assemblies and i|o modules (See Sections 9.3 through 9.22 for each i|o module to be installed.)

Connect i|station (See Section 10 i|Station Installation.)

■

9.12 MODEL IO-8DI115AMN MODULE

This 8-channel discrete input, 115 Vac powered non-isolated module receives eight discrete inputs from dry contact switches. The module provides 115 Vac power to the high side of each input, with the returns commoned internally. The module also has a pulse counting option that can provide a total of input pulses for each of the channels.

Installing a field termination assembly and an i|o module on a module carrier is described in Section 2 Getting Started. i|o wiring is described below. Module specifications are provided at the end of this section.

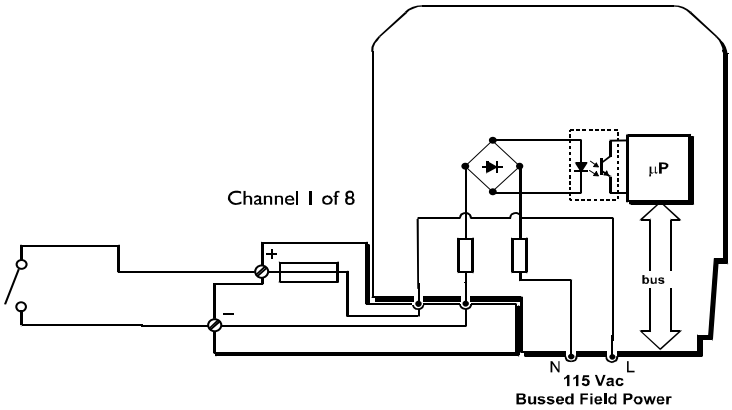

IMPORTANT

Bussed field power at 115 Vac (nominal) is required for this module. See Section 8.2 Model iO-(4/8)MC for wiring details. Do not install on a control carrier.

WARNING



Electrical shock hazard
Explosion hazard

Can cause death or injury



- Remove power from all wires and terminals before working on equipment.
- In potentially hazardous atmosphere, remove power from equipment before connecting or disconnecting power, signal, or other circuit.
- Observe pertinent regulations regarding installation in hazardous area.

9.12.1 i|o Wiring

Field wiring is usually organized in pairs and a pair of cable ends will be wired to the field termination assembly as shown. As the connections are stepped, the lower wire (i.e. even numbered terminals) should be cut 0.5" (12 mm) shorter than the upper wire.

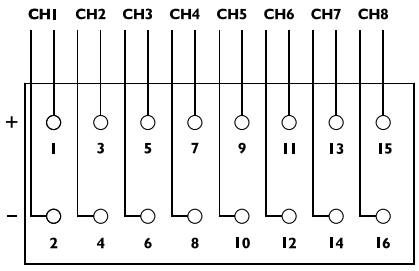

1. Trim back the insulation on each conductor 1/4" (6 mm).
2. Check for correct terminal number. See the field termination assembly channel pattern at right.
3. Insert the conductor and tighten the screw. Do not over tighten.
4. Connect the cable shield to the earthing bar along the edge of the carrier. (The shield at the field end should not be grounded.)

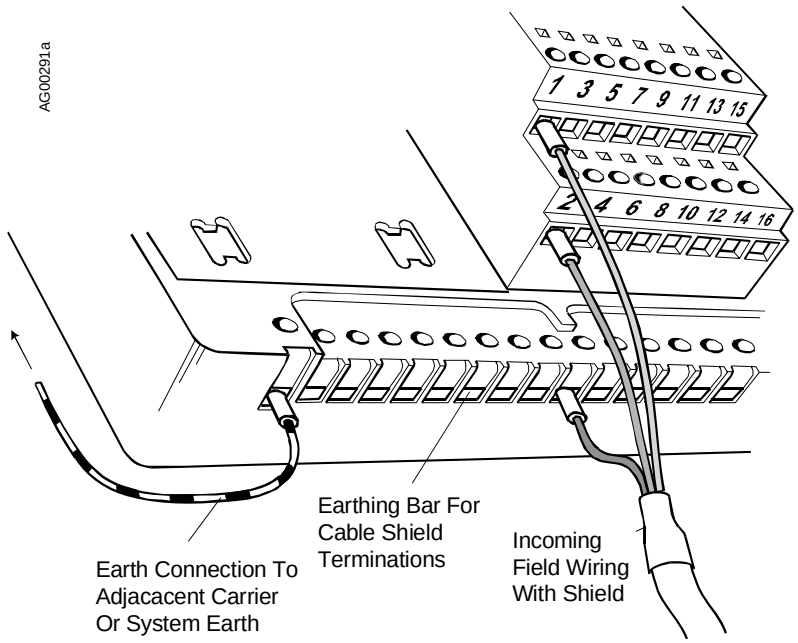

Typical i|o Cable Connection Method

9.12.2 Channel "STATUS" LED

ON	OFF	FLASHING
Sensor loop OK	Open circuit sensor and channel inactive	Open circuit sensor and channel active OR Error condition

An error (flashing LED) could be as a result of an error in the A/D converter

9.12.3 Specifications

See Section 15 Model Designations and System Specifications for environmental specifications.

Inputs

Number of channels..... 8
OFF current ..... < 0.56 mA
ON current..... > 1.4 mA

Configurable Parameters

Selectable timeout filter..... 0 to 512 ms
Pulse counting ..... off/on (up to 65,536 counts)
Latched/unlatched inputs..... off/on

Mounting

Control Carrier..... NO
Module Carrier ..... YES

Power Supplies

Ubus (12V) current ..... 60 mA (typical)
75 mA (maximum)
Bussed Field Power ..... 115 Vac ±10%
Frequency ..... 50/60 Hz

Mechanical

Module Key Code..... E1
Module width..... 1.7" (42 mm)
Weight ..... 6.0 oz (170 g)

Field Terminals

Recommended Field Terminal ..... iO-FST8-FT (fused)
Compatible Field Terminal..... iO-SST8-FT (unfused)*

NOTE

Refer to Table 2-1 i|o Power and Keying in Section 2 Getting Started for earlier field terminal models that have been discontinued.

*User supplied fusing of the Bussed Field Power supply is recommended.

9.12.4 Where to Go Next

Install remaining field termination assemblies and i|o modules (See Sections 9.3 through 9.22 for each i|o module to be installed.)

Connect i|station (See Section 10 i|Station Installation.)

■

9.13 MODEL IO-8DI115ASI MODULE

This 8-channel discrete input, 115 Vac sinking isolated module receives eight discrete inputs from 115 Vac field voltage sources. The input voltage is compared against a threshold level and a true or false condition generated. The input channels are isolated from each other and from the internal Ubus. The module also has a pulse counting option that can provide a total of input pulses for each of the channels.

Installing a field termination assembly and an i|o module on a control carrier or module carrier is described in Section 2 Getting Started. i|o wiring is described below. Module specifications are provided at the end of this section.

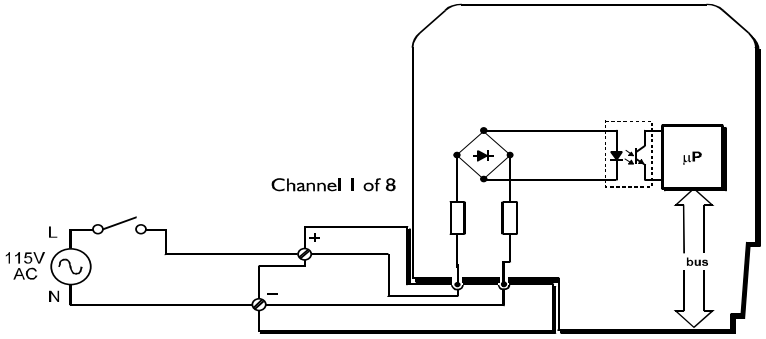

WARNING



Electrical shock hazard
Explosion hazard

Can cause death or injury



- Remove power from all wires and terminals before working on equipment.
- In potentially hazardous atmosphere, remove power from equipment before connecting or disconnecting power, signal, or other circuit.
- Observe pertinent regulations regarding installation in hazardous area.

9.13.1 i|o Wiring

Field wiring is usually organized in pairs and a pair of cable ends will be wired to the field termination assembly as shown. As the connections are stepped, the lower wire (i.e. even numbered terminals) should be cut 0.5" (12 mm) shorter than the upper wire.

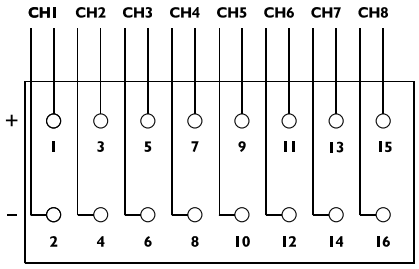

1. Trim back the insulation on each conductor 1/4" (6 mm).
2. Check for correct terminal number. See the field termination assembly channel pattern at right.
3. Insert the conductor and tighten the screw. Do not over tighten.
4. Connect the cable shield to the earthing bar along the edge of the carrier. (The shield at the field end should not be grounded.)

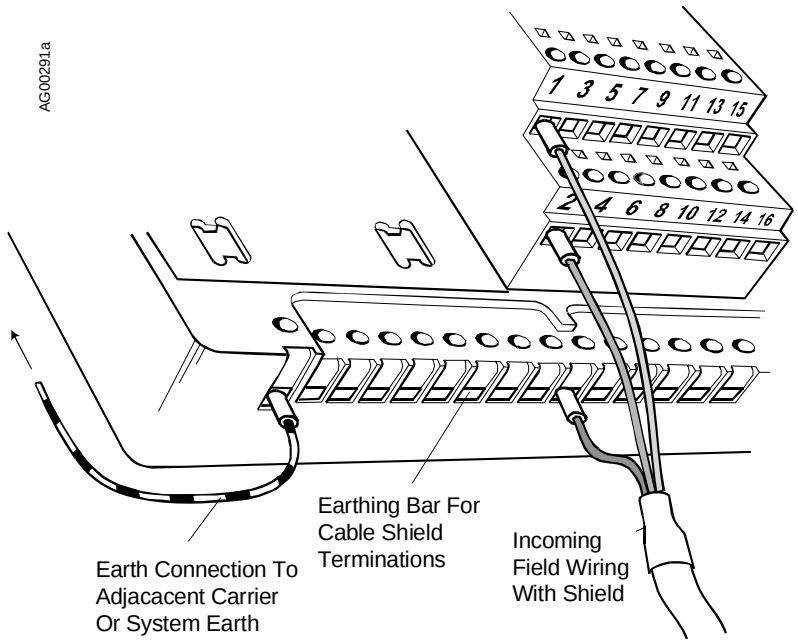

Typical i|o Cable Connection Method

9.13.2 Channel "STATUS" LED

ON	OFF	FLASHING
Sensor loop OK	Open circuit sensor and channel inactive	Open circuit sensor and channel active OR Error condition

An error (flashing LED) could be as a result of an error in the A/D converter

9.13.3 Specifications

See Section 15 Model Designation and System Specifications for environmental specifications.

Inputs

Number of channels..... 8
OFF voltage..... < 34 Vac
ON voltage..... > 84 Vac
Wetting current..... 2 mA (nominal) @ 115 Vac
Maximum input voltage..... 130 Vac
Frequency ..... 50/60 Hz

Configurable Parameters

Selectable timeout filter..... 0 to 512 ms
Pulse counting ..... off/on (up to 65,536 counts)
Latched/unlatched inputs..... off/on

Mounting

Control Carrier..... YES
Module Carrier ..... YES

Power Supplies

Ubus (12V) current..... 60 mA (typical)
75 mA (maximum.)
Bussed Field Power ..... not required

Mechanical

Module Key Code..... E4
Module width..... 1.7" (42 mm)
Weight ..... 6.0 oz (170 g)

Field Terminals

Recommended Field Terminal ..... iO-SST8-FT (unfused)*
Compatible Field Terminal..... iO-FST8-FT (fused)

NOTE

Refer to Table 2-1 i|o Power and Keying in Section 2 Getting Started for earlier field terminal models that have been discontinued.

*User supplied fusing of the Field Power supply is recommended.

9.13.4 Where to Go Next

Install remaining field termination assemblies and i|o modules (See Sections 9.3 through 9.22 for each i|o module to be installed.)

Connect i|station (See Section 10 i|Station Installation.)

■

9.14 MODEL IO-8DI230AMN MODULE

This 8-channel discrete input, 230 Vac powered non-isolated module receives eight discrete inputs from dry contact switches. 230 Vac power is provided to the high side of each input, with the returns commoned internally. The module also has a pulse counting option that can provide a total of input pulses for each of the channels.

Installing a field termination assembly and an i|o module on a module carrier is described in Section 2 Getting Started. i|o wiring is described below. Module specifications are provided at the end of this section.

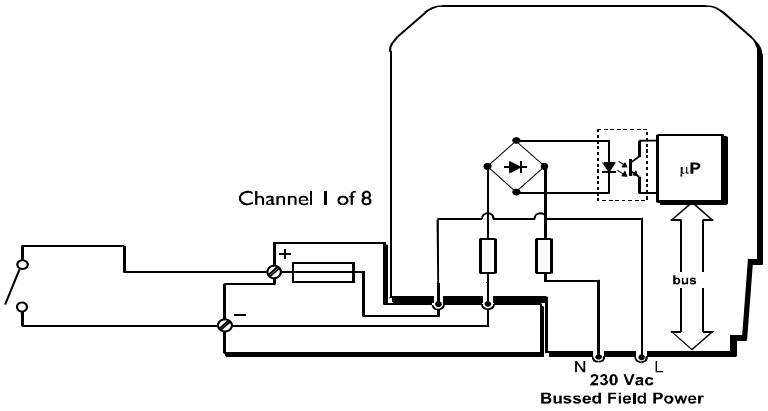

IMPORTANT

Bussed field power at 230 Vac (nominal) is required for this module. See Section 8.2 Model iO-(4/8)MC for wiring details. Do not install on a control carrier.

WARNING



Electrical shock hazard
Explosion hazard

Can cause death or injury



- Remove power from all wires and terminals before working on equipment.
- In potentially hazardous atmosphere, remove power from equipment before connecting or disconnecting power, signal, or other circuit.
- Observe pertinent regulations regarding installation in hazardous area.

9.14.1 i|o Wiring

Field wiring is usually organized in pairs and a pair of cable ends will be wired to the field termination assembly as shown. As the connections are stepped, the lower wire (i.e. even numbered terminals) should be cut 0.5" (12 mm) shorter than the upper wire.

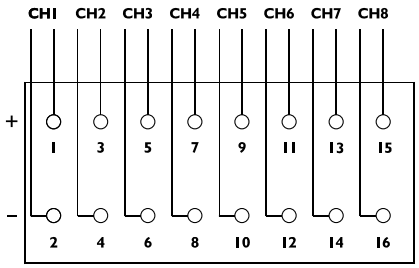

1. Trim back the insulation on each conductor 1/4" (6 mm).
2. Check for correct terminal number. See the field termination assembly channel pattern at right.
3. Insert the conductor and tighten the screw. Do not over tighten.
4. Connect the cable shield to the earthing bar along the edge of the carrier. (The shield at the field end should not be grounded.)

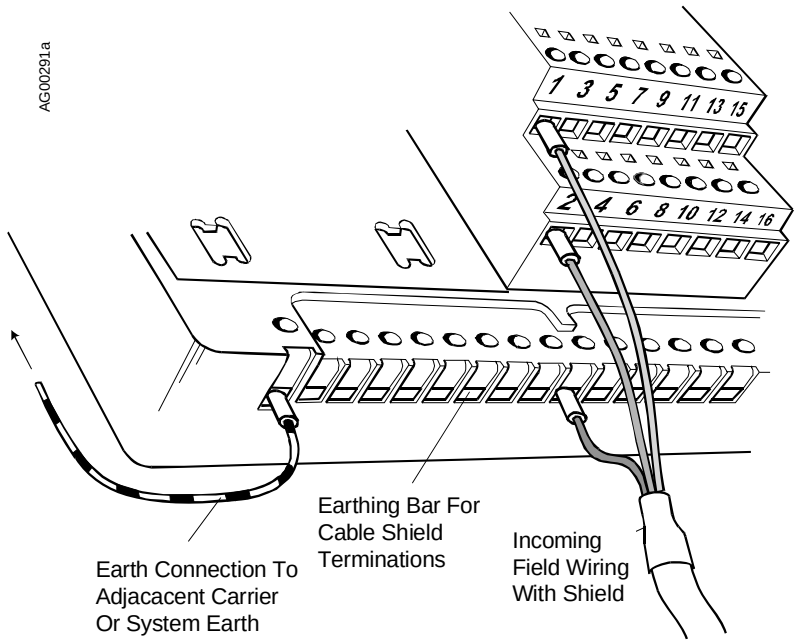

Typical i|o Cable Connection Method

9.14.2 Channel "STATUS" LED

ON	OFF	FLASHING
Sensor loop OK	Open circuit sensor and channel inactive	Open circuit sensor and channel active OR Error condition

An error (flashing LED) could be as a result of an error in the A/D converter

9.14.3 Specifications

See Section 15 Model Designations and System Specifications for environmental specifications.

Inputs

Number of channels..... 8
OFF current ..... < 0.28 mA
ON current..... > 0.71 mA
Wetting current..... 1 mA (nominal) @ 230 Vac

Configurable Parameters

Selectable timeout filter..... 0 to 512 ms
Pulse counting ..... off/on (up to 65,536 counts)
Latched/unlatched inputs..... off/on

Mounting

Control Carrier..... NO
Module Carrier ..... YES

Power Supplies

Ubus (12V) current ..... 60 mA (typical)
75 mA (maximum)
Bussed Field Power ..... 207 to 2655 Vac
Frequency ..... 50/60 Hz

Mechanical

Module Key Code E2
Module width ..... 1.7" (42 mm)
Weight ..... 6.0 oz (170 g)

Field Terminals

Recommended Field Terminal ..... iO-FST8-FT (fused)
Compatible Field Terminal ..... iO-SST8-FT (unfused)*

NOTE

Refer to Table 2-1 i|o Power and Keying in Section 2 Getting Started for earlier field terminal models that have been discontinued.

*User supplied fusing in the Bussed Field Power supply is recommended.

9.14.4 Where to Go Next

Install remaining field termination assemblies and i|o modules (See Sections 9.3 through 9.22 for each i|o module to be installed.)

Connect i|station (See Section 10 i|Station Installation.)

■

9.15 MODEL IO-8DI230ASI MODULE

This 8-channel discrete input, 230 Vac sinking isolated module receives eight discrete inputs from 230 Vac field voltage sources. The input voltage is compared against a threshold level and a true or false condition generated. The input channels are isolated from each other and from the internal Ubus. The module also has a pulse counting option that can provide a total of input pulses for each of the channels.

Installing a field termination assembly and an i|o module on a control carrier or module carrier is described in Section 2 Getting Started. i|o wiring is described below. Module specifications are provided at the end of this section.

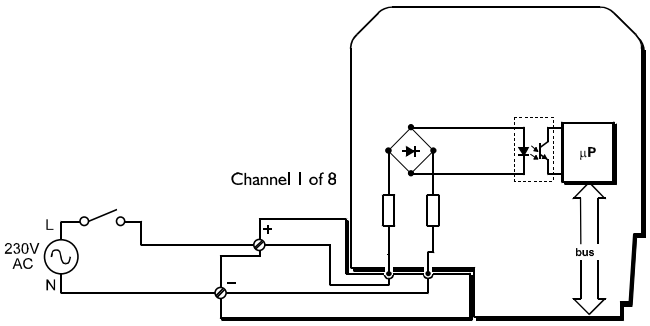

WARNING



Electrical shock hazard
Explosion hazard

Can cause death or injury

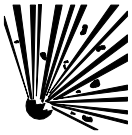

- Remove power from all wires and terminals before working on equipment.
- In potentially hazardous atmosphere, remove power from equipment before connecting or disconnecting power, signal, or other circuit.
- Observe pertinent regulations regarding installation in hazardous area.

9.15.1 i|o Wiring

Field wiring is usually organized in pairs and a pair of cable ends will be wired to the field termination assembly as shown. As the connections are stepped, the lower wire (i.e. even numbered terminals) should be cut 0.5" (12 mm) shorter than the upper wire.

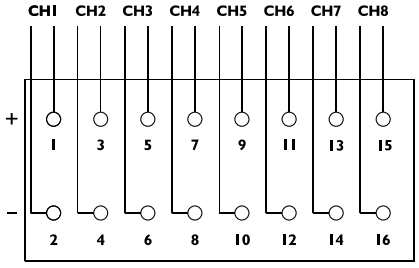

1. Trim back the insulation on each conductor 1/4" (6 mm).
2. Check for correct terminal number. See the field termination assembly channel pattern at right.
3. Insert the conductor and tighten the screw. Do not over tighten.
4. Connect the cable shield to the earthing bar along the edge of the carrier. (The shield at the field end should not be grounded.)

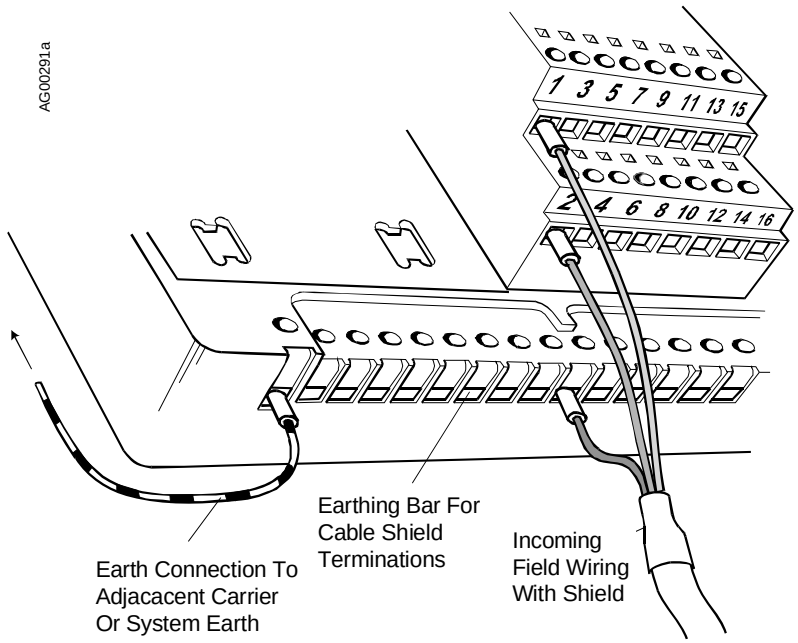

Typical i|o Cable Connection Method

9.15.2 Channel "STATUS" LED

ON	OFF	FLASHING
Sensor loop OK	Open circuit sensor and channel inactive	Open circuit sensor and channel active OR Error condition

An error (flashing LED) could be as a result of an error in the A/D converter

9.15.3 Specifications

See Section 15 Model Designation and System Specifications for environmental specifications.

Inputs

Number of channels..... 8
OFF voltage..... < 68 Vac
ON voltage..... > 168 Vac
Wetting current..... 1 mA (nominal) @ 230 Vac
Maximum input voltage..... 265 Vac
Frequency ..... 50/60 Hz

Configurable Parameters

Selectable timeout filter (2ms steps)..... 0 to 512 ms
Pulse counting ..... off/on (up to 65,536 counts)
Latched/unlatched inputs..... off/on

Mounting

Control Carrier..... YES
Module Carrier ..... YES

Power Supplies

Ubus (12V) current..... 60 mA (typical)
75 mA (maximum)
Bussed Field Power ..... not required

Mechanical

Module Key Code..... E5
Module width..... 1.7" (42 mm)
Weight ..... 6.0 oz (170 g)

Field Terminals

Recommended Field Terminal ..... iO-SST8-FT (unfused)*
Compatible Field Terminal..... iO-FST8-FT (fused)

NOTE

Refer to Table 2-1 i|o Power and Keying in Section 2 Getting Started for earlier field terminal models that have been discontinued.

*User supplied fusing of the Field Power supply is recommended.

9.15.4 Where to Go Next

Install remaining field termination assemblies and i|o modules (See Sections 9.3 through 9.22 for each i|o module to be installed.)

Connect i|station (See Section 10 i|Station Installation.)

■

9.16 MODEL IO-16DI24DMN MODULE

This 16-channel discrete input, 24 Vdc powered non-isolated module receives sixteen discrete inputs for dry contact switches. The module provides 24 Vdc power to the high side of each input, with the returns commoned internally. The module also has a pulse counting option that can provide a total of input pulses for each of the channels.

Installing a field termination assembly and an i|o module on a control carrier or module carrier is described in Section 2 Getting Started. i|o wiring is described below. Module specifications are provided at the end of this section.

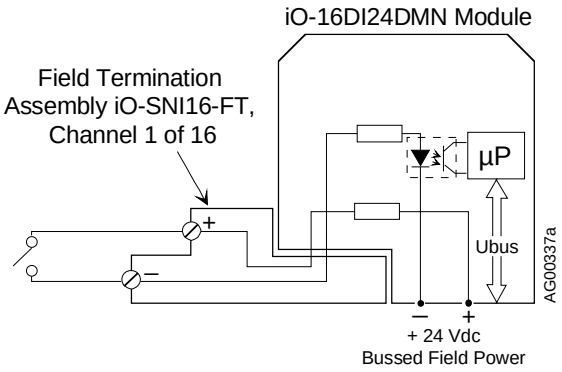

IMPORTANT

Bussed field power at 24 Vdc ±10% is required for this module. If module is to be mounted on a module carrier, see Section 8.2 Model iO-(4/8)MC for wiring details.

WARNING

Explosion Hazard

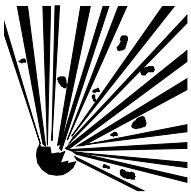

Explosion can cause death or serious injury.

In a potentially explosive atmosphere, remove power from the equipment before connecting or disconnecting power, signal, or other circuits.

All pertinent regulations regarding installation in a hazardous area must be observed.

9.16.1 i|o Wiring

Field wiring is usually organized in pairs and a pair of cable ends will be wired to the field termination assembly as shown. As the connections are stepped, the lower wire (i.e. even numbered terminals) should be cut 0.5" (12 mm) shorter than the upper wire.

1. Trim back the insulation on each conductor 1/4" (6 mm).
2. Check for correct terminal number. See the field termination assembly channel pattern at right and Figure 9-25.
3. Prepare the conductors; see the Typical i|o Cable Connection Method drawing. Insert each conductor and tighten the screw. Do not over tighten.
4. Connect the cable shield to the earthing bar along the edge of the carrier. (The shield at the field end should not be grounded.)

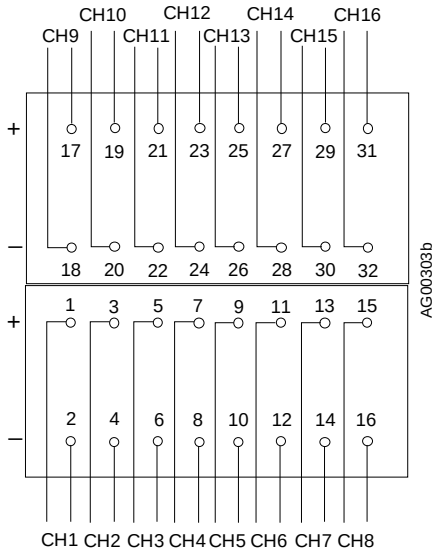

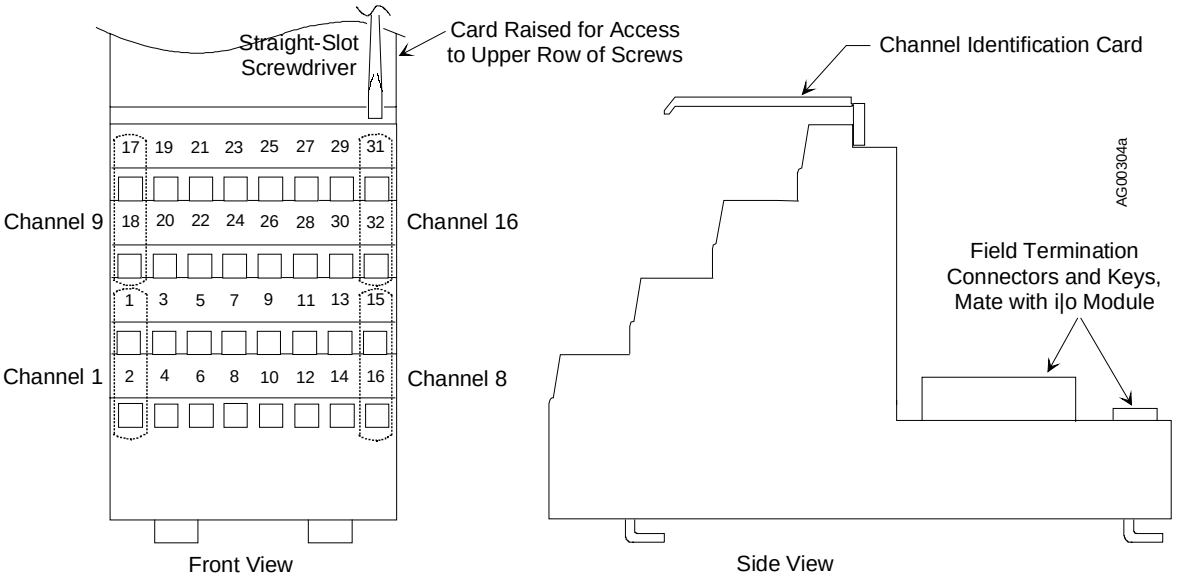

FIGURE 9-25 Channel Field Termination Assembly

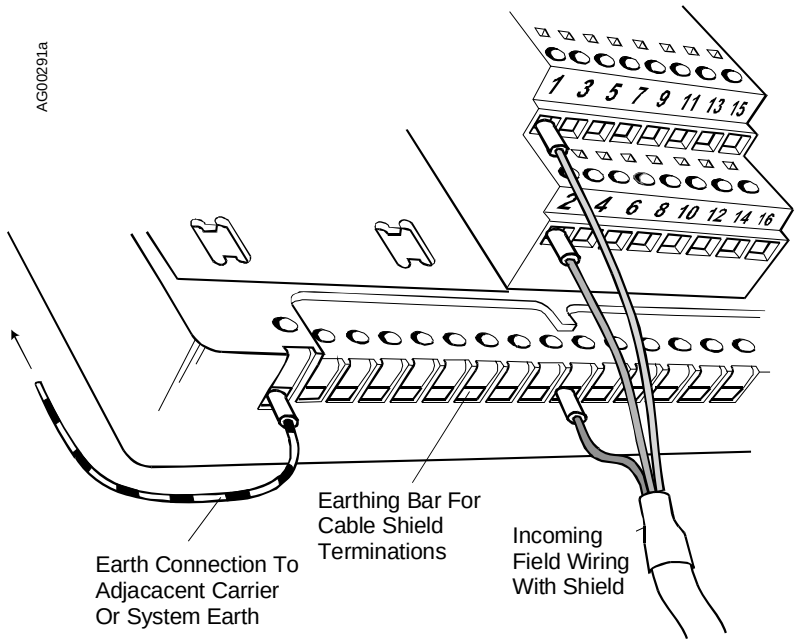

Typical i|o Cable Connection Method

9.16.2 Channel "STATUS" LED

ON	OFF	FLASHING
Sensor loop OK	Open circuit sensor and channel inactive	Open circuit sensor and channel active OR Error condition

An error (flashing LED) could be due to an error in the A/D converter

9.16.3 Specifications

See Section 15 Model Designation and System Specifications for environmental specifications.

Inputs

Number of channels..... 16
OFF current ..... < 0.3 mA
ON current..... > 1.2 mA
Wetting current..... 2.5 mA (typical)
Minimum pulse width detected ..... 3 ms
Maximum switching frequency (no filtering)..... 100 Hz
Isolation (any channel to Ubus) ..... 250 Vac

Configurable Parameters

Selectable timeout filter..... 0 to 512 ms
Pulse counting ..... off/on (up to 65,536 counts)
Latched/unlatched inputs..... off/on

Mounting

Control Carrier..... YES
Module Carrier ..... YES

Power Supplies

Ubus (12V) current..... 75 mA (typical)
110 mA (maximum)
Bussed Field Power ..... 80 mA @ 24 Vdc

Mechanical

Module Key Code..... E1
Module width..... 1.7" (42 mm)
Weight ..... 6.0 oz (170 g)

Field Terminals

Recommended Field Terminal ..... iO-SNI16-FT (unfused)

9.16.4 Where to Go Next

Install remaining field termination assemblies and i|o modules (See Sections 9.3 through 9.22 for each i|o module to be installed.)

Connect i|station (See Section 10 i|Station Installation.)

■

9.17 MODEL IO-16DI24DSI MODULE

This 16-channel discrete input, 24 Vdc sinking isolated module receives sixteen discrete inputs from 24 Vdc field voltage sources. The input voltage is compared against the required threshold and a true or false condition generated. The input channels are isolated from each other and from the internal Ubus. The module also has a pulse counting option that can provide a total of input pulses for each of the channels.

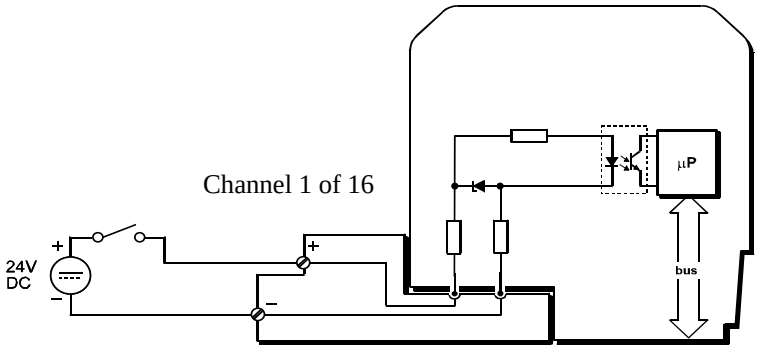

Installing a field termination assembly and an i|o module on a control carrier or module carrier is described in Section 2 Getting Started. Field termination wiring is described below. Module specifications are provided at the end of the section.

WARNING

Explosion Hazard

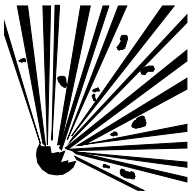

Explosion can cause death or serious injury.

In a potentially explosive atmosphere, remove power from the equipment before connecting or disconnecting power, signal, or other circuits.

All pertinent regulations regarding installation in a hazardous area must be observed.

9.17.1 i|o Wiring

Field wiring is usually organized in pairs and a pair of cable ends will be wired to the field termination assembly as shown. As the connections are stepped, the lower wire (i.e. even numbered terminals) should be cut 0.5" (12 mm) shorter than the upper wire.

1. Trim back the insulation on each conductor 1/4" (6 mm).
2. Check for correct terminal number. See the field termination assembly channel pattern at right and Figure 9-26.
3. Prepare the conductors; see the Typical i|o Cable Connection Method figure. Insert each conductor and tighten the screw. Do not over tighten.
4. Connect the cable shield to the earthing bar along the edge of the carrier. (The shield at the field end should not be grounded.)

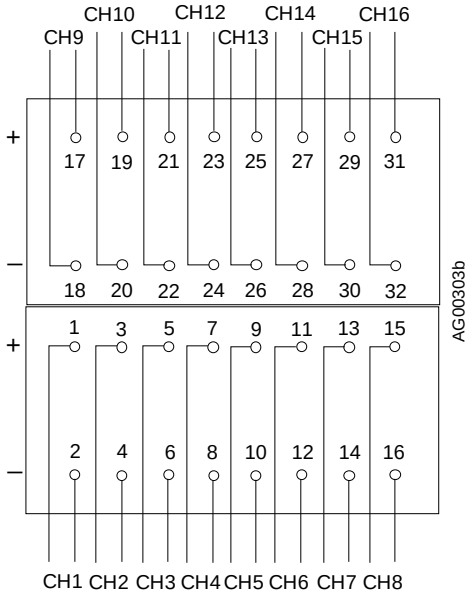

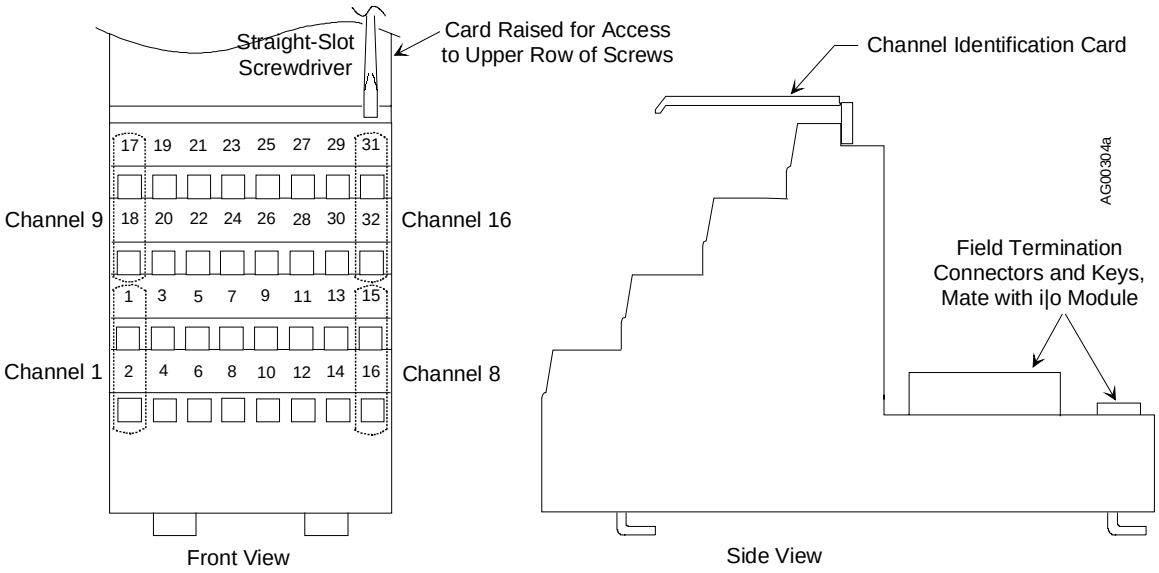

FIGURE 9-26 Channel Field Termination Assembly

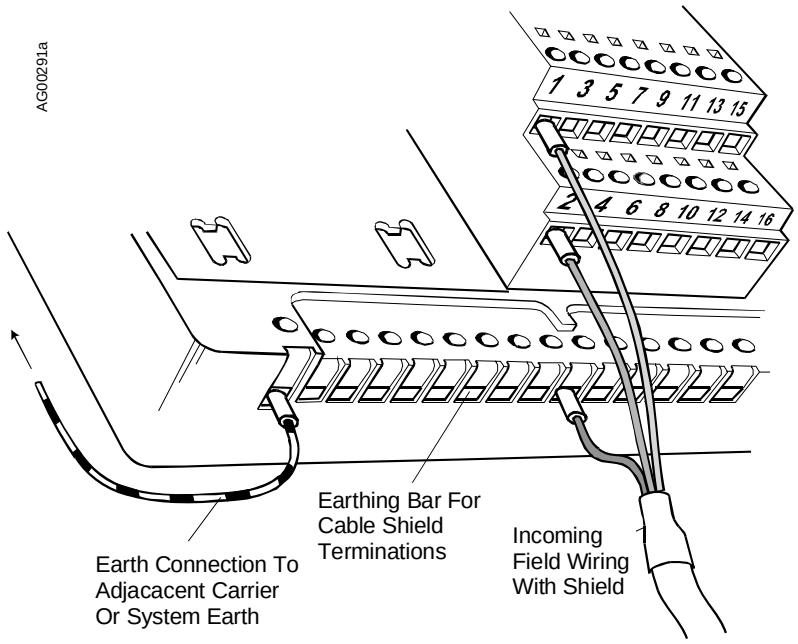

Typical i|o Cable Connection Method

9.17.2 Channel "STATUS" LED

ON	OFF	FLASHING
Sensor loop OK	Open circuit sensor and channel inactive	Open circuit sensor and channel active OR Error condition

An error (flashing LED) could be as a result of an error in the A/D converter

9.17.3 Specifications

See Section 15 Model Designations and System Specifications for environmental specifications.

Inputs

Number of channels..... 16
OFF voltage..... 3.2 Vdc
ON voltage..... > 11 Vdc
Wetting current..... 2.5 mA (nominal) @ 24 Vdc
Minimum pulse width detected ..... 3 ms
Maximum switching frequency (no-filtering) ..... 100 Hz
Maximum voltage
  Input..... 30 Vdc
  Reverse input ..... –25 Vdc

Configurable Parameters

Selectable timeout filter..... 0 to 512 ms
Pulse counting ..... off /on (up to 65,536 counts)
Latched/unlatched inputs..... off /on

Mounting

Control Carrier..... YES
Module Carrier ..... YES

Power Supplies

Ubus (12V) current ..... 75 mA (typical)
110 mA (maximum)
Bussed Field Power ..... not required

Mechanical

Module Key Code E2
Module width ..... 1.7" (42 mm)
Weight ..... 6.0 oz (170 g)

Field Terminals

Recommended Field Terminals ..... iO-SNI16-FT (unfused)

9.17.4 Where to Go Next

Install remaining field termination assemblies and i|o modules (See Sections 9.3 through 9.22 for each i|o module to be installed.)

Connect i|station (See Section 10 i|Station Installation.)

■

9.18 MODEL IO-8DO60DMN MODULE

This 8-channel discrete output, 2-60 Vdc powered non-isolated module provides eight powered outputs, which can be used to control loads such as solenoids and relays. The supply to the loads is commoned and can be up to 60 Vdc. The maximum switched current is 1A per channel (limited to 6A per 8-channel module).

Installing a field termination assembly and an i|o module on a module carrier is described in Section 2 Getting Started. i|o wiring is described below. Module specifications are provided at the end of this section.

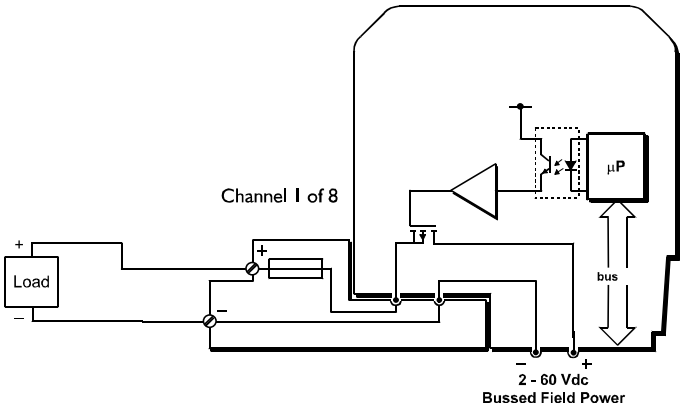

IMPORTANT

Bussed field power in the range 2-60 Vdc ±10% is required for this module. See Section 8.2 Model iO-(4/8)MC for wiring details.

WARNING



Electrical shock hazard
Explosion hazard

Can cause death or injury

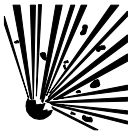

- Remove power from all wires and terminals before working on equipment.
- In potentially hazardous atmosphere, remove power from equipment before connecting or disconnecting power, signal, or other circuit.
- Observe pertinent regulations regarding installation in hazardous area.

9.18.1 i|o Wiring

Field wiring is usually organized in pairs and a pair of cable ends will be wired to the field termination assembly as shown. As the connections are stepped, the lower wire (i.e. even numbered terminals) should be cut 0.5" (12 mm) shorter than the upper wire.

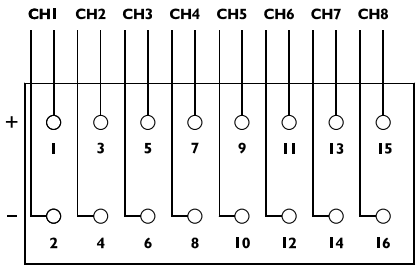

1. Trim back the insulation on each conductor 1/4" (6 mm).
2. Check for correct terminal number. See the field termination assembly channel pattern at right.
3. Insert the conductor and tighten the screw. Do not over tighten.
4. Connect the cable shield to the earthing bar along the edge of the carrier. (The shield at the field end should not be grounded.)

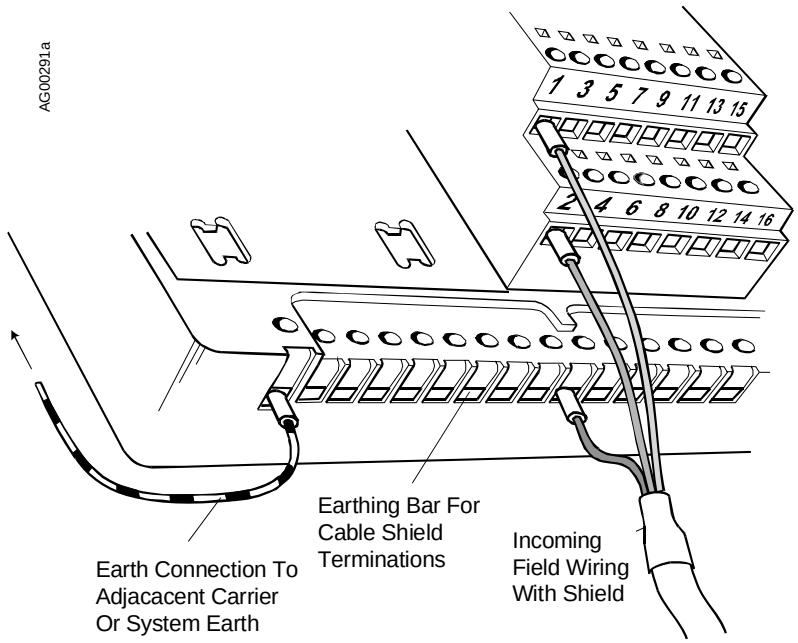

Typical i|o Cable Connection Method

9.18.2 Channel "STATUS" LED

ON	OFF	FLASHING
Sensor loop OK	Open circuit sensor and channel inactive	Open circuit sensor and channel active OR Error condition

An error (flashing LED) could be as a result of an error in the A/D converter

9.18.3 Specifications

See Section 15 Model Designations and System Specifications for environmental specifications.

Outputs

Number of channels..... 8
Output voltage range ..... 2-60 Vdc
ON voltage drop ..... 0.25V (maximum)
OFF leakage current ..... 1.0 mA (maximum)
Switched current per channel
Continuous (limited to 6 A per 8-channel module) 1A
For < 100 ms..... 4A
For < 20 ms..... 6A

CAUTION

An internal fuse could rupture if the total instantaneous switched current exceeds the following values:

10A for < 100 ms
18A for < 20 ms

Configurable Parameters

Output ..... discrete

Mounting

Control Carrier ..... NO
Module Carrier ..... YES

Power Supplies

Ubus (12V) current ..... 60 mA (typical)
75 mA (maximum)
Bussed Field Power ..... 2 to 60 Vdc

Mechanical

Module Key Code B6
Module width ..... 1.7" (42 mm)
Weight ..... 7.1 oz (200 g)

Field Terminals

Recommended Field Terminal ..... iO-FST8-FT (fused)
Compatible Field Terminal ..... iO-SST8-FT (unfused)*

NOTE

Refer to Table 2-1 i|o Power and Keying in Section 2 Getting Started for earlier field terminal models that have been discontinued.

*User supplied fusing of the Bussed Field Power supply is recommended.

9.18.4 Where to Go Next

Install remaining field termination assemblies and i|o modules (See Sections 9.3 through 9.22 for each i|o module to be installed.)

Connect i|station (See Section 10 i|Station Installation.)

■

9.19 MODEL IO-8DO60DEI MODULE

This 8-channel discrete output, 2-60 Vdc external powered isolated module provides eight fully isolated semiconductor switches that may be used to control dc sources of up to 60V to supply loads such as solenoids and relays. The maximum switched current is 1A per channel.

Installing a field termination assembly and an i|o module on a control carrier or module carrier is described in Section 2 Getting Started. i|o wiring is described below. Module specifications are provided at the end of this section.

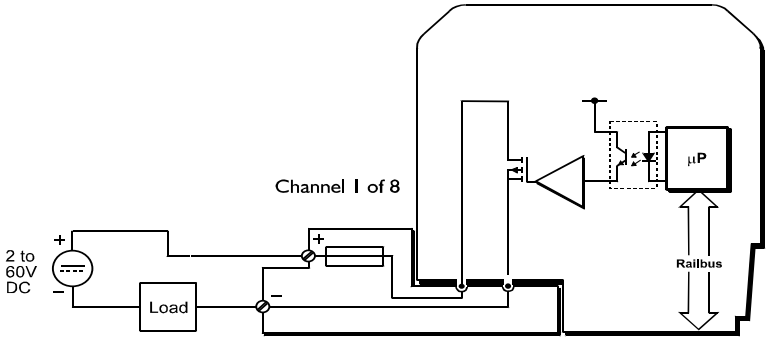

(Railbus in figure = Ubus.)

WARNING



Electrical shock hazard
Explosion hazard

Can cause death or injury



- Remove power from all wires and terminals before working on equipment.
- In potentially hazardous atmosphere, remove power from equipment before connecting or disconnecting power, signal, or other circuit.
- Observe pertinent regulations regarding installation in hazardous area.

9.19.1 i|o Wiring

Field wiring is usually organized in pairs and a pair of cable ends will be wired to the field termination assembly as shown. As the connections are stepped, the lower wire (i.e. even numbered terminals) should be cut 0.5" (12 mm) shorter than the upper wire.

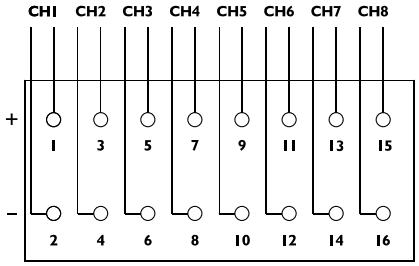

1. Trim back the insulation on each conductor 1/4" (6 mm).
2. Check for correct terminal number. See the field termination assembly channel pattern at right.
3. Insert the conductor and tighten the screw. Do not over tighten.
4. Connect the cable shield to the earthing bar along the edge of the carrier. (The shield at the field end should not be grounded.)

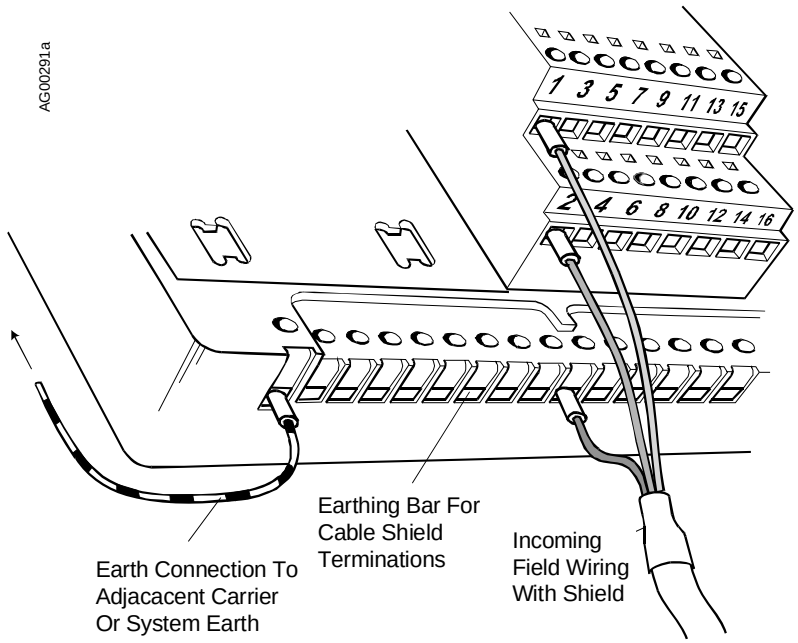

Typical i|o Cable Connection Method

9.19.2 Channel "STATUS" LED

ON	OFF	FLASHING
Sensor loop OK	Open circuit sensor and channel inactive	Open circuit sensor and channel active OR Error condition

An error (flashing LED) could be as a result of an error in the A/D converter

9.19.3 Specifications

See Section 15 Model Designations and System Specifications for environmental specifications.

Outputs

Number of channels..... 8
Output voltage range ..... 2-60 Vdc
ON voltage drop ..... 0.25V (maximum)
OFF leakage current ..... 1.0 mA (maximum)
Switched current per channel
  Continuous..... 1A
  For < 100ms..... 4A
  For < 20ms..... 6A

Configurable Parameters

Output..... discrete

Mounting

Control Carrier..... YES
Module Carrier ..... YES

Power Supplies

Ubus (12V) current..... 60 mA (typical)
75 mA (maximum)
Bussed Field Power ..... not required

Mechanical

Module Key Code..... B5
Module width..... 1.7" (42 mm)
Weight ..... 7.1 oz (200 g)

Field Terminals

Recommended Field Terminal ..... iO-FST8-FT (fused)
Compatible Field Terminal..... iO-SST8-FT (unfused)*

NOTE

Refer to Table 2-1 i|o Power and Keying in Section 2 Getting Started for earlier field terminal models that have been discontinued.

*Additional external fusing to protect field wiring is recommended

9.19.4 Where to Go Next

Install remaining field termination assemblies and i|o modules (See Sections 9.3 through 9.22 for each i|o module to be installed.)

Connect i|station (See Section 10 i|Station Installation.)

■

9.20 MODEL IO-8DO250AMN MODULE

This 8-channel output, 20-265 Vac powered non-isolated module provides eight powered outputs, which can be used to control loads such as solenoids and relays. The supply to the loads is commoned and may be 115 or 230 Vac, nominal. The maximum switched current is 1A per channel (limited to 3A per 8-channel module).

Installing a field termination assembly and an i|o module on a module carrier is described in Section 2 Getting Started. i|o wiring is described below. Module specifications are provided at the end of this section.

(Railbus in Figure = Ubus.)

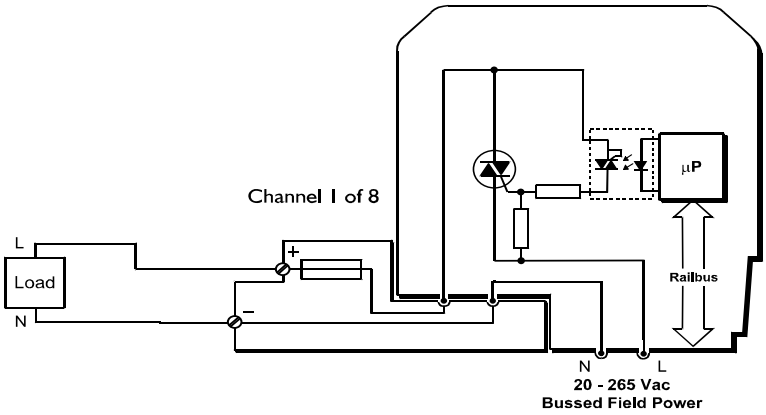

IMPORTANT

Bussed field power in the range 20-265 Vac is required for this module. See Section 8.2 Model iO-(4/8)MC for wiring details.

WARNING



Electrical shock hazard
Explosion hazard

Can cause death or injury

- Remove power from all wires and terminals before working on equipment.
- In potentially hazardous atmosphere, remove power from equipment before connecting or disconnecting power, signal, or other circuit.
- Observe pertinent regulations regarding installation in hazardous area.



9.20.1 i|o Wiring

Field wiring is usually organized in pairs and a pair of cable ends will be wired to the field termination assembly as shown. As the connections are stepped, the lower wire (i.e. even numbered terminals) should be cut 0.5" (12 mm) shorter than the upper wire.

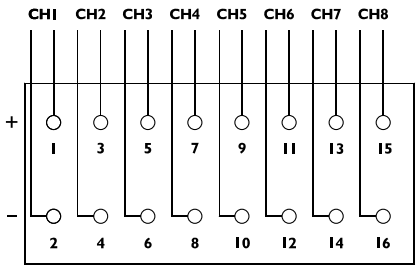

1. Trim back the insulation on each conductor 1/4" (6 mm).
2. Check for correct terminal number. See the field termination assembly channel pattern at right.
3. Insert the conductor and tighten the screw. Do not over tighten.
4. Connect the cable shield to the earthing bar along the edge of the carrier. (The shield at the field end should not be grounded.).

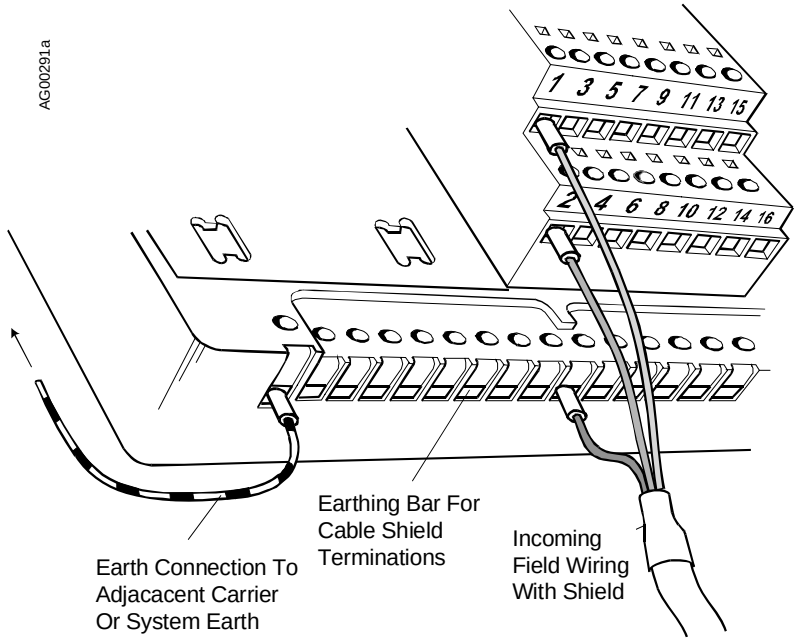

Typical i|o Cable Connection Method

9.20.2 Channel "STATUS" LED

ON	OFF	FLASHING
Sensor loop OK	Open circuit sensor and channel inactive	Open circuit sensor and channel active OR Error condition

An error (flashing LED) could be due to an error in the A/D converter

9.20.3 Specifications

See Section 15 Model Designations and System Specifications for environmental specifications.

Outputs

Number of channels..... 8
Output voltage range ..... 20-265 Vac
Frequency ..... 50/60 Hz
ON voltage drop ..... < 1.2V
OFF leakage current ..... < 4 mA
Switched current per channel*
  Continuous..... 1A**
  For < 100 ms..... 5A
  For < 20 ms..... 20A

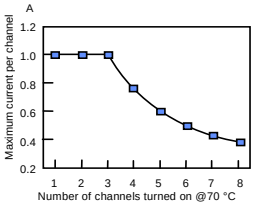

* Stated figures are for operation with unfused field terminals. When operating with 2A fused field terminals, the maximum switched current is 5A inrush for <10 ms pulse width at 0.1% duty cycle and $<10^8$ operations.

** Limited to 3A per 8-channel module. De-rate further according to graph.

Minimum load current, per channel..... @ 115 Vac, 11 mA
@ 230 Vac, 5 mA

Configurable Parameters

Fail Safe Mode ..... last/set
Fail Safe Value ..... off/on

Mounting

Control Carrier..... NO
Module Carrier ..... YES

Power Supplies

Ubus (12V) current..... 110 mA (typical)
125 mA (maximum)
Bussed Field Power (voltage)..... 20 to 265 Vac

Mechanical

Module Key Code..... F1
Module width..... 1.7" (42 mm)
Weight ..... 7.8 oz (220 g)

Field Terminals

Recommended Field Terminals..... iO-FST8-FT (fused)
Compatible Field Terminals ..... iO-SST8-FT (unfused)*

NOTE

Refer to Table 2-1 i|o Power and Keying in Section 2 Getting Started for earlier field terminal models that have been discontinued.

*User supplied fusing of the Bussed Field Power supply is recommended.

9.20.4 Where to Go Next

Install remaining field termination assemblies and i|o modules (See Sections 9.3 through 9.22 for each i|o module to be installed.)

Connect i|station (See Section 10 i|Station Installation.)

■

9.21 MODEL IO-8DO250AEI MODULE

This 8-channel discrete output, 20-265 Vac external powered isolated module provides eight fully isolated semiconductor switches that may be used to control ac sources of up to 250V to supply loads such as solenoids and relays. The maximum switched current is 1A per channel (limited to 3A per 8-channel module).

Installing a field termination assembly and an i|o module on a control carrier or module carrier is described in Section 2 Getting Started. i|o wiring is described below. Module specifications are provided at the end of this section.

(Note. Railbus in figure = Ubus.)

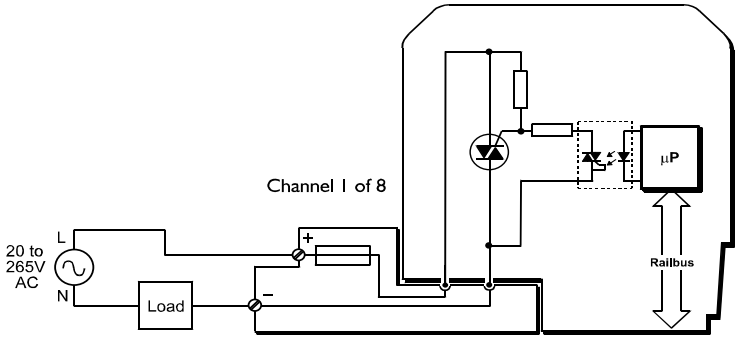

WARNING



Electrical shock hazard
Explosion hazard

Can cause death or injury



- Remove power from all wires and terminals before working on equipment.
- In potentially hazardous atmosphere, remove power from equipment before connecting or disconnecting power, signal, or other circuit.
- Observe pertinent regulations regarding installation in hazardous area.

9.21.1 i|o Wiring

Field wiring is usually organized in pairs and a pair of cable ends will be wired to the field termination assembly as shown. As the connections are stepped, the lower wire (i.e. even numbered terminals) should be cut 0.5" (12 mm) shorter than the upper wire.

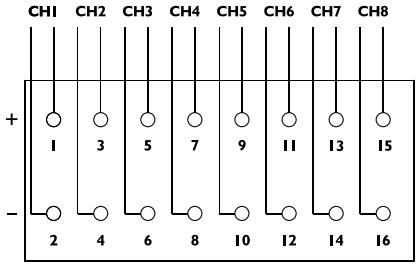

1. Trim back the insulation on each conductor 1/4" (6 mm).
2. Check for correct terminal number. See the field termination assembly channel pattern at right.
3. Insert the conductor and tighten the screw. Do not over tighten.
4. Connect the cable shield to the earthing bar along the edge of the carrier. (The shield at the field end should not be grounded.)

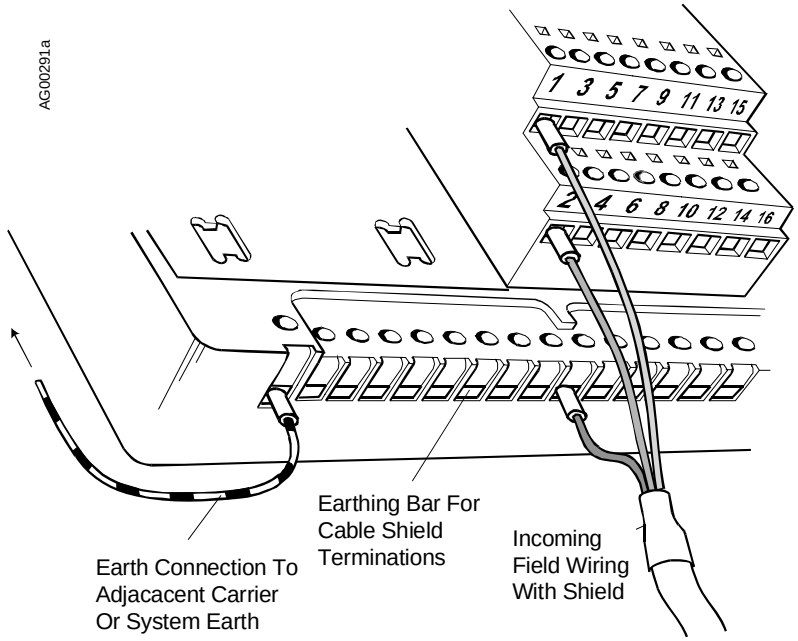

Typical i|o Cable Connection Method

9.21.2 Channel "STATUS" LED

ON	OFF	FLASHING
Sensor loop OK	Open circuit sensor and channel inactive	Open circuit sensor and channel active OR Error condition

An error (flashing LED) could be due to an error in the A/D converter

9.21.3 Specifications

See Section 15 Model Designations and System Specifications for environmental specifications.

Outputs

Number of channels..... 8
Output voltage range ..... 20-265 Vac
Frequency ..... 50/60 Hz
ON voltage drop ..... < 1.2V
OFF leakage current ..... < 4 mA
Switched current per channel*
  Continuous..... 1A**
  For < 100 ms..... 5A
  For < 20 ms..... 20A

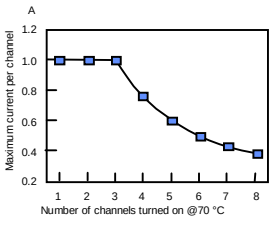

5A

* Stated figures are for operation with unfused field terminals. When operating with 2A fused field terminals, the maximum switched current is inrush for <10 ms pulse width at 0.1% duty cycle and $<10^8$ operations.

** Limited to 3A per 8-channel module. De-rate further according to graph.

Minimum load current, per channel..... @ 115 Vac, 11 mA
@ 230 Vac, 5 mA

Configurable Parameters

Fail Safe Mode ..... last/set
Fail Safe Value ..... off/on

Mounting

Control Carrier..... YES
Module Carrier ..... YES

Power Supplies

Ubus (12V) current..... 110 mA (typical)
125 mA (maximum)
Bussed Field Power ..... not required

Mechanical

Module Key Code..... F4
Module width..... 1.7" (42 mm)
Weight ..... 7.8 oz (220 g)

Field Terminals

Recommended Field Terminals..... iO-FST8-FT (fused)
Compatible Field Terminals ..... iO-SST8-FT (unfused)*

NOTE

Refer to Table 2-1 i|o Power and Keying in Section 2 Getting Started for earlier field terminal models that have been discontinued.

* Additional external fusing to protect field wiring is recommended.

9.21.4 Where to Go Next

Install remaining field termination assemblies and i|o modules (See Sections 9.3 through 9.22 for each i|o module to be installed.)

Connect i|station (See Section 10 i|Station Installation.)

■

10.0 I|STATION INSTALLATION

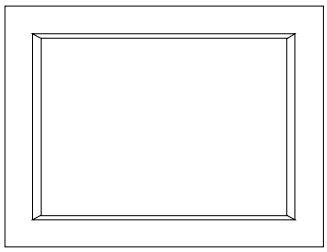

The 353R HMI is a Windows-based PC that runs i|ware PC operator interface software. i|station is a powerful industrial PC, however, an equivalent laptop or desktop PC can also serve as the HMI. Refer to the Installing i|ware section in Section 2 Getting Started for minimum PC requirements.

This section describes installation of flat panel and desktop mounted i|stations in a controlled, non-hazardous environment, such as a control room. It also describes connecting a user-supplied laptop or desktop Windows-based PC to 353R.

Mount the i|station in a panel cutout or placed it on a desktop, with installation of a desktop stand kit. The operating system, drivers, i|config, and i|ware software are installed at the factory (as specified on the order). For most installations, simply mount i|station and connect the cables.

If i|ware and i|config are to be installed on a user-supplied laptop or desktop PC rather than an i|station, the cabling will be similar to that described here, however, i|ware, i|config, and other software must be installed by the user.

IMPORTANT

Always refer to the instructions and manuals supplied with the equipment for detailed information. The information in this section covers several models and is intended only as a guide.

From this point, “PC” will refer to all i|station models, laptops, and desktop PCs.

10.1 SUPPLIED AND ACCESSORY MATERIALS

Listed below are the typical i|station materials. Refer to the packing list accompanying the equipment and to the items on your order for any changes to this list. Also, refer to Section 15 Model Designations and System Specifications in this manual as needed for additional information.

- 15" Industrial Panel PC with:
  - Factory installed Windows operating system, drivers, and i|ware (i|config optional)
  - Windows® XP Pro CD-ROM, manual, and software license agreement
  - Industrial Panel PC User’s Manual
  - 3-1/2" disks with CD-ROM setup and boot files
  - CD-ROM with drivers and utilities
  - Through-panel mounting hardware
  - “Y” Adapter for keyboard and mouse cables
- Accessory, Keyboard and Mouse
- Accessory, Desktop Stand Kit with installation instructions
- Accessory, Communication cable, 10 ft (3M) in length, with MMJ11 connectors
- Accessory, PC serial port adapter (DB9 or DB25 to MMJ11)

10.2 INSTALLER SUPPLIED MATERIALS

Listed here are some of the needed materials and tools. Some sites may need additional items.

- i|station or user-supplied Windows-based laptop or desktop PC (Additional installation and configuration steps may be required by user-supplied equipment.)
- Common hand tools
- Panel cutout tools for through-panel mounting

10.3 INSTALLATION CONSIDERATIONS

Before beginning the installation, identify and determine the purpose of each connector and switch on the exterior of the PC. Refer to Figure 10-1 and the user's manual supplied with the PC as necessary.

Determine whether the connection between the PC and 353R is to be RS232, RS485, or Ethernet. If the equipment can be interconnected by the 10 ft (3M) communication cable, RS232 can be used. If the distance is greater, RS485 or Ethernet should be used. Refer to Section 10.4 Cabling below for more information.

Be sure that the installation site conforms to the environmental specifications stated in the PC's user manual. A non-hazardous environment is generally required.

See the PC's user manual for panel and desktop mounting dimensions and installation procedures. Note mounting panel thickness dimension and be sure that the panel will not bow. Panel mounting hardware is supplied. When panel mounting, provide a shelf for the keyboard and mouse. A typical i|station rear panel is shown below. The on/off switch and power input connector are shown in Figure 10-1.

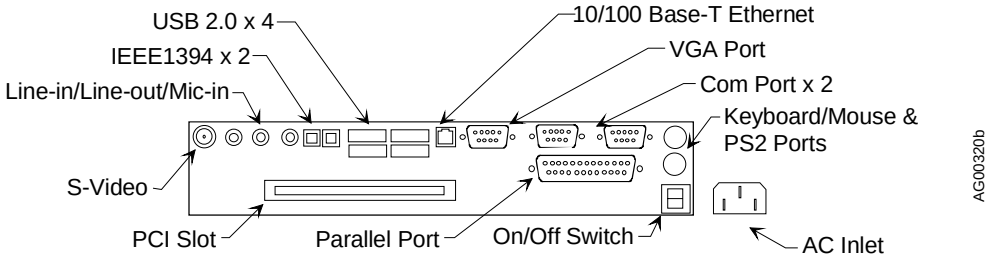

FIGURE 10-1 Typical i|station Rear Panel

10.4 CABLING

Cable the PC to the control carrier, the peripherals (e.g. printer), and an AC power source.



WARNING

Electrical shock hazard

Hazardous voltage can cause death or serious injury.

Remove power from all wires and terminals before working on this equipment. Turn the PC off before connecting or disconnecting cables.

Connecting the PC to 353R

The PC to 353R connection can use RS232, RS485 or Ethernet.

- RS232 - Connect the PC serial port to P1 (an RS232 MMJ11 connector) on the control carrier using the communication cable and appropriate serial port adapter. Two adapters are available: DB9 to MMJ11 and DB25 to MMJ11. Refer to Section 15 Model Designations and System Specifications for accessory part numbers for the communications cable and adapters.
- RS485 - Connect the PC serial port to the NCA and NCB terminals on the control carrier. Refer to the Modbus section in Section 9.1 Model 353RCM_ _ _ _B_ for wiring details. An RS485 to RS232 isolated converter is needed; the communications cable and adapters used for the RS232 connection are not needed.
- Ethernet - Connect an Ethernet crossover cable from the i|station Ethernet connector to P4 on the 353R control carrier. An Ethernet board must be installed in 353R. Typically, this cable is 8-10 feet (3 meters) in length.

Connecting the PC to Peripherals and Power

Refer to Figures 10-1 and 10-2 in this section and to the user manual supplied with the PC to connect the keyboard, mouse, printer, external CD-ROM drive and AC power.

10.5 STARTING I|WARE

Refer to the Getting Started manual on the i|ware CD.

10.6 REPAIR

Should an i|station malfunction, refer to the supplied user's manual for troubleshooting. For additional assistance, contact a product support center listed in Section 1.6 Customer/Product Support.

10.7 SPECIFICATIONS

15" i|station

Display	15" (diagonal) Color TFT; Resolution 1024 x 768, 256 colors
Processor	Intel® P4 2.4 GHz
RAM	1GB
Hard Drive	40GB ATA100
Optical Drive	CD-ROM
Disk Drive	3-1/2"
Operating System	Windows XP Professional SP2 or later
I/O and Network Ports	See Figure 10-1
Power Requirements	115-230V @47-63 Hz
Touchscreen	Analog Resistive
Dimensions	See Figure 10-2
Weight	14.3 lbs (6.5 kg)
Environment	Temperature - 0-45°C (32-113°F) Humidity - 10-95% @ 40°C non-condensing Shock - 10 G peak acceleration (11 msec duration) EMC – BSMI, VCCI, CE, FCC Class B
Safety	CB, CE, UL
Front Panel Protection	IP 65/NEMA 4

Note: Specifications shown are typical and may vary.

10.8 WHERE TO GO NEXT

Typically, this is the final hardware installation step. Return to Section 2.4.2 Installation Steps, step 17, to perform a complete check of the installation before applying power.

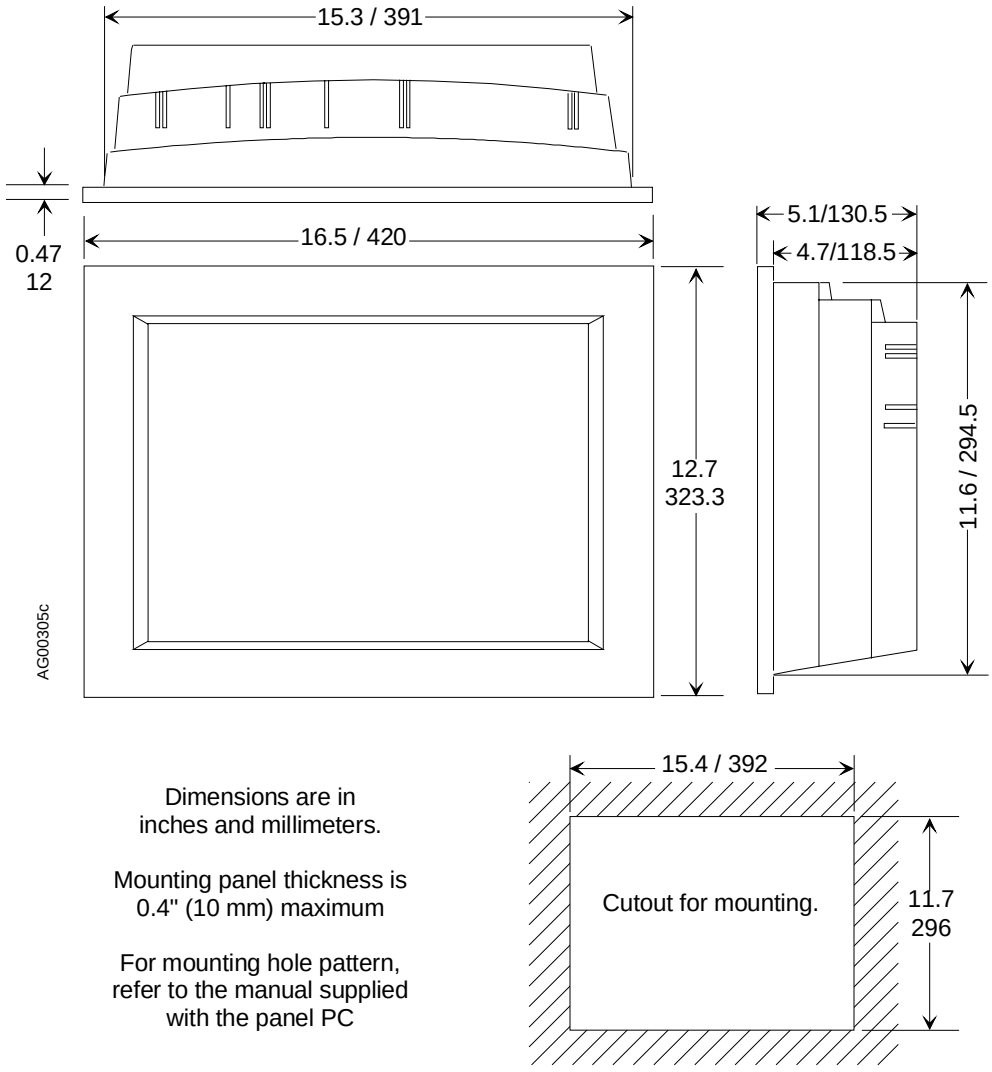

FIGURE 10-2 Dimensions, i|station, 15" Model

■

11.0 LOCAL FACEPLATE OPERATION

Operating the controller from a local faceplate is described in this section. Each faceplate display, pushbutton, and knob will be discussed first in normal operation mode and then in configuration mode. This section contains many references to function blocks. As necessary, refer to Section 4 Function Blocks for details about a function block.

Most operator controls are shown on the faceplate below. Several additional pushbuttons are located behind the flip-down door at the bottom of the faceplate. These will be discussed in the configuration mode portion of this section.

11.1 NORMAL OPERATION MODE

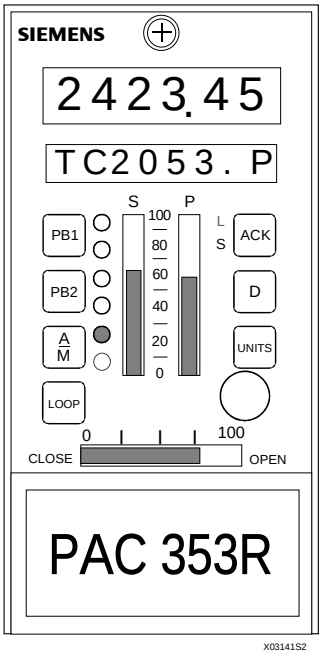

- **6-Digit** Numeric Display - displays the numeric value of the variable identified by the 8-character alphanumeric display. Numbers can be displayed from 0.00000 to 999999 or -0.0000 to -99999. Any input exceeding these limits will be shown as the maximum or minimum displayable value and cause the display to flash.

- **8-Character** Alphanumeric Display - normally displays the loop tag with the dot suffix of the variable currently showing in the 6-digit numeric display (e.g. **TC2053.P** is the **P**rocess variable for loop **TC2053**). A loop tag that is displayed is called the *Active Loop* and all operator controls (e.g. PB1, PB2, A/M, ACK, D, UNITS, ALARM, TUNE, TAG, and QUICK) will affect the function blocks within the *Active Loop*.

- **PB1** Pushbutton - controls the operation of the **PB1SW** (**PB 1** transfer **SW**itch) function block when the block has been configured for use within the *Active Loop*. See the function block details in Section 4 Function Blocks for more information on **PB1SW**.

- **PB2** Pushbutton - controls the operation of the **PB2SW** (**PB 2** transfer **SW**itch) function block when the block has been configured for use within the *Active Loop*. See the function block details for more information on **PB2SW.**

- **A/M** Pushbutton - controls the operation of an **A/M** (**A**uto/**M**anual) function block when the block has been configured for use within the *Active Loop*. See the function block details for more information on **A/M**. When the A/M is switched to Auto the numeric display will show the Setpoint value, as indicated by **.S** in the alphanumeric display, and when switched to Manual, the Valve value and **.V** will be shown.

- **LOOP** Pushbutton - One or more loops can be configured. When more than one loop has been configured, the **LOOP** button will advance the operator display to the next *Active Loop*. All operator controls now affect the *Active Loop* that is currently shown in the alphanumeric display (e.g. **FC2367**). When a loop is first displayed, the loop tag will appear in the alphanumeric and the displayed variable will be the same as when the loop was last viewed.

- **ACK** Pushbutton - this button is used together with the **L** & **S** status LEDs to manage events (e.g. alarm, status, and error conditions) within the controller. Events have user assigned priorities 1-5 (with 1 the highest) and will be organized within the controller, first by priority and then by order of occurrence.

    - **S** Status LED - Indicates that event is active in the **S**tation. A flashing LED indicates that the event needs to be acknowledged.
    - **L** Status LED - Indicates that event is active in the displayed **L**oop. A flashing LED indicates that the event needs to be acknowledged.

Priority:

- Priority 1 causes the station bargraphs and event LEDs to flash and requires acknowledgment to stop flashing. This is the highest priority.
- Priority 2 also flashes the bargraphs but stops flashing when the event clears (i.e. Self Clearing).
- Priority 3 causes the event LEDs L & S to flash and stops only when the event is acknowledged.
- Priority 4 also causes the event LEDs to flash but stops when the event clears.
- Priority 5 displays the event but does not require that it be acknowledged. This is the lowest priority.

If the event is in the active loop, the alphanumeric display will alternate between the loop tag and the unacknowledged condition (e.g. 'TC2053.P' <---> 'A3 HI'). Press the ACK button to acknowledge this condition and stop the flashing.

The ACK button, after all events have been acknowledged, can then be used to scroll through any active alarm or status conditions within the *Active Loop*. Pressing the ACK button will scroll through the list of active events and wrap around to the start of the list when more than one event is active. This function will time out if the ACK button is not pressed for 3 seconds and return to the normal display mode.

If an unacknowledged event is not within the active loop, press the LOOP button to page through the loops.

- **D** Pushbutton - changes the variable currently displayed. Pressing this pushbutton steps the display one position in the sequence P, S, V, X and Y from any starting point within the display select group.

- **UNITS** Pushbutton - displays the units of the variable shown in the alphanumeric display. When the button is pressed the units that apply to the displayed variable will appear in the alphanumeric (e.g. 'TC2053.P' 'deg F', 'TC2053.V' 'PRCT'). After 3 seconds, the alphanumeric display will return to the variable tag.

- **S** Bargraph - this vertical bargraph displays the scaled range of the controller setpoint in the *Active Loop*. Bargraph height shows the setpoint as the % of range value. The setpoint in engineering units can be viewed by pressing the **D** button to display the dot S parameter (e.g. **TC2053.S**).

- **P** Bargraph - this vertical bargraph displays the scaled range of the controller process in the *Active Loop*. Bargraph height shows the process as the % of range value. The process in engineering units can be viewed by pressing the **D** button to display the dot P parameter (e.g. **TC2053.P**).

- **Pulser Knob** - rotate the Pulser to change the value in the numeric display (e.g. **S**etpoint, **V**alve, or other variable configured for normal operator display changes such as **R**atio, **B**ias). The Pulser knob is also used in configuration to change values in the alphanumeric display.

  An accelerator is included. Turning the knob faster multiplies the rate of change of the displayed parameter. Large value changes then require fewer knob rotations.

- **V** Bargraph - this horizontal bargraph displays the scaled range of the controller output in the *Active Loop.* The output/valve signal is shown as the % of range value. The value in engineering units can be viewed by pressing the **D** button to display the dot V parameter (e.g. **TC2053.V**).

11.2 CONFIGURATION MODE

Configuration pushbuttons are located behind the flip-down door on the lower quarter of the faceplate. Note that many of these buttons are used in both the normal operation mode and configuration mode, as described below.

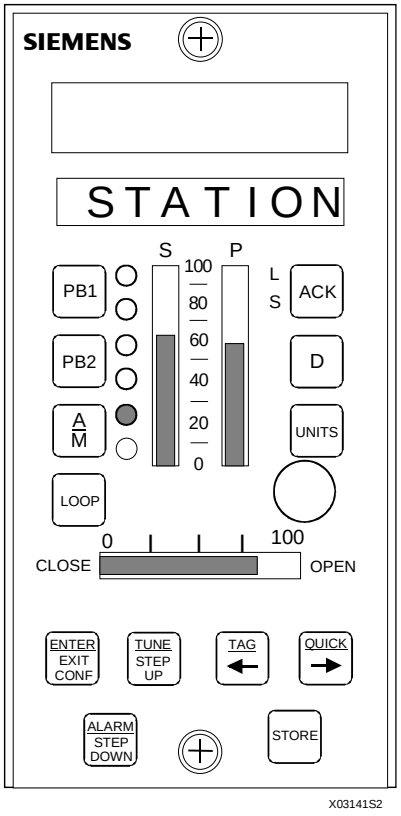

- **ENTER/EXIT CONF** - press to enter configuration when the station is in the normal operation mode or press to exit configuration when in the configuration mode.

- **ALARM/STEP DOWN** - has a dual purpose. When in the normal operation mode, pressing the button will scroll through the alarm configuration parameters if the ALARM function block has been configured in the *Active Loop*. The alarm setting is displayed in engineering units and the % of range value will also be displayed on the setpoint bargraph by flashing a single segment equal to the % of range value. If security clearance is satisfied, the parameters can also be changed. See the ALARM function block description for details on the parameters.

  When in the configuration mode this button will step down to the next configuration level. See Section 3 Configuration Overview for details on typical levels of the configuration mode.

- **TUNE/STEP UP** - has a dual purpose. When in the normal operation mode, pressing the button will scroll through the controller tuning parameters and allow activating the AUTOTUNE algorithm, if configured for the loop controller. If security clearance is satisfied, the parameters can also be changed.

  When in the configuration mode this button will step up to the next configuration level.

- **TAG/<---** - has a dual purpose. When in the normal operation mode, pressing the button will scroll the complete tag name of the *Active Loop* in the alphanumeric display. The tag will scroll one character at a time starting on the right (e.g. -------T, -----TI, ----TIC).

  When in the configuration mode, this button will provide a shift left function for configurable items (e.g. will shift the decimal point left).

- **QUICK/--->** - has a dual purpose. When in the normal mode this button will step through and access either previously selected configuration parameters in the quick hold blocks configured within the *Active Loop* (e.g. the HOLD value in **QHOLD03** which was labeled to display **TEMP_LIM** having a range of 300.0 to 600.0) or parameters defined as **QUICKSET** *(1)* in certain function blocks (e.g. RATIO).

  When in the configuration mode, this button will provide a shift right function for configurable items (e.g. will shift the decimal point right).

- **STORE** - will store the configuration parameter to memory. All configuration changes, except for QUICK, 'BIAS', 'RATIO', and (quickset hold), require a store before the change is applied to the configuration. However, the QUICK functions will also require a store for the value to be placed in permanent memory, otherwise, it will only remain in battery RAM. Values in battery will be used on a hot or warm start. A cold start will use the value in permanent memory.

(1) ALARM, TUNE, & QUICK are all considered as QUICKSET functions.

11.3 AUTOTUNE PROCEDURE

If the AUTOTUNE parameter in the controller function block is set to YES, the autotune procedure can be initiated using the TUNE pushbutton located behind the flip-down door. The Autotuner will substitute an ON_OFF controller for the PD or PID function. By making +/- step changes to the valve position, the controller will control the process at the current setpoint while it learns about the process dynamics. The controller then uses this knowledge to derive recommended P, I, and D settings.

Press the TUNE button to step through the following parameters and, if desired, initiate autotune:

PG ..... **P**roportional Gain setting - (view or change)
TI ..... **I**ntegral Time setting - PID/PIDAG controllers only (view or change)
MR ..... Manual Reset setting - PD controller only (view or change)
TD ..... **D**erivative Time setting - (view or change)
% DEV ..... The peak/peak % process deviation that the autotuner will maintain during test
% HYS ..... The % process change needed before the valve output will switch
AUTOTUNE . Set to YES and STORE to start autotune.
Press EXIT CONF to return to normal operator faceplate operation.
AT PG ..... **P**roportional Gain setting recommended by the autotuner
AT TI ..... **I**ntegral Time setting recommended by the autotuner
AT TD ..... **D**erivative Time setting recommended by the autotuner
STORE AT ... Pressing STORE transfers autotuner recommended settings to controller

While autotuning, the controller will continue normal operation. Pressing the A/M button to switch the controller to Manual will terminate autotune. While in autotune, the alphanumeric display will alternate between 'AUTOTUNE' and the loop tag name and will stop alternating when the autotune program has been completed. Once completed, the controller will return to the mode prior to autotune initiation. When the POST AT (in the controller block) is set to auto transfer, the recommended tuning parameters will automatically be transferred to the controller and it will return to automatic control. To review the AT parameters before initiating autotune, press TUNE and then press STORE at the STORE AT prompt to transfer the recommended settings.

Chart 1 (0-100% range) illustrates a typical autotune exercise. Variable 1 is the Valve and 2 the Process. In this example, the process has noise with a standard deviation of less than 0.5%. The % HYS (% hysteresis band) is set to 0.75% and the % DEV (% deviation from setpoint which should be set to at least 4 times the % HYS value) is set to 3%.

The autotuner will use the initial valve step size (set as % STEP in the controller function block) during the first 1-1/2 cycles to learn the approximate gain of the process. It will then adjust the valve step size during the remainder of the autotuning exercise to maintain the % DEV setting. When this test concludes, the recommended settings are transferred to the controller and a 20% setpoint change is made to illustrate the controller tuning.

When the autotuner is started for the next autotune exercise, it will use the process gain learned during the previous exercise to determine the valve step size unless: the parameter AT RESET in the controller block has been stored as YES, warnings occurred during the first test, or the station has been power cycled.

Autotuning Considerations:

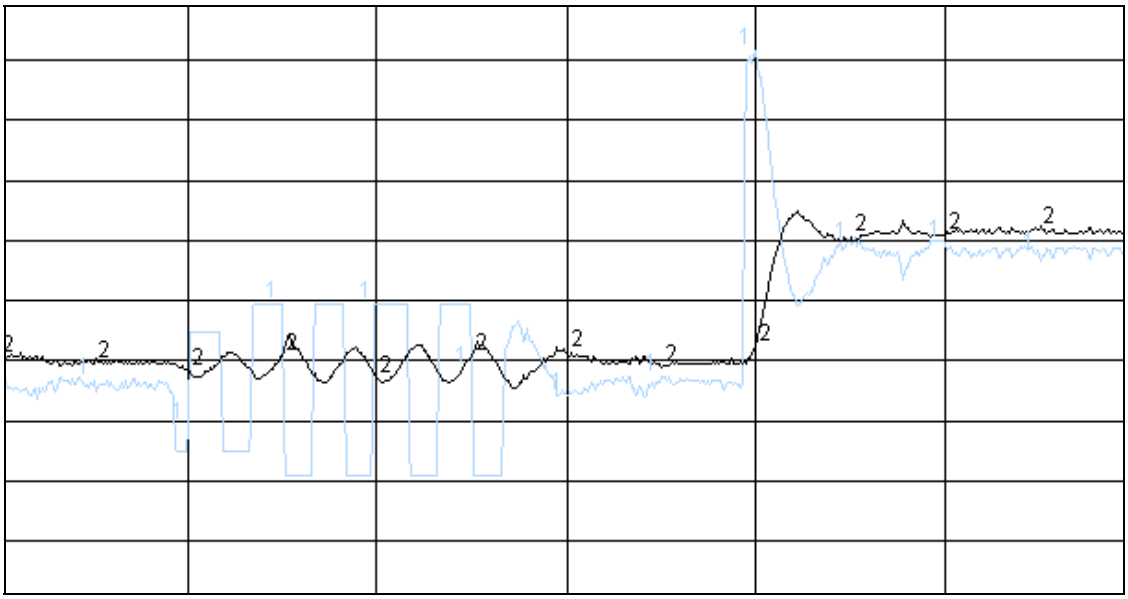

Chart 1

Process Noise - could have an effect where the autotuner will not produce periodic valve cycles. The autotuner will complete an exercise but results may not be satisfactory. This is illustrated in the first autotuning exercise in chart 2 which is the same process as chart 1 but the % HYS was set at 0.5%. If these results occur when the controller % HYS has been set to A (auto set hysteresis) the controller may be having difficulty deriving a good noise figure and manual entry of the % HYS parameter should be considered. The % HYS value should be increased to at least twice the standard deviation value of the noise. In cases where the noise amplitude is extremely large, the filter on the analog input should be increased to minimize the amplitude of the noise seen by the controller. The value of the % DEV parameter should be set to at least four times the % HYS value for best results.

Steady State Conditions - must be established for the process and controller prior to starting an autotune exercise. The autotuner can be initiated while in manual or auto. Steady state is reached when the present valve signal has brought the process to its present value, and the setpoint is equal to the process. When not at steady state, valve cycles will not be symmetrical as illustrated in the second tuning exercise in chart 2 or, as a worse case situation, the valve may not cycle at all. If the valve is does cycle, although not symmetrically, adequate tuning results will still be obtained.

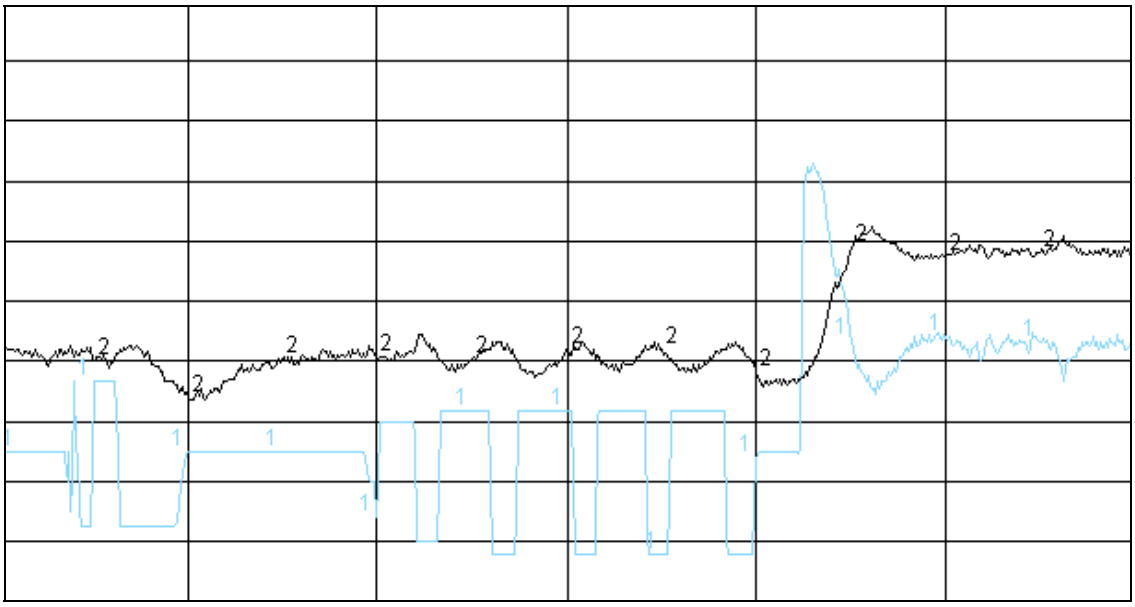

Chart 2

Autotuner Errors - terminate the autotune exercise and returns the control loop to the point prior to the start of autotune. Clear an Error message by pressing the ACK button.

Autotune Errors

ERROR	DESCRIPTION
E1	A zero crossing did not occur within 120 minutes. Most likely caused by the control loop not being in a steady state condition when the autotuner was started.
E2	Process went out of range twice (<0%, >100%). The first time an out of range occurs, the autotuner will cut the valve step size in half and restart the exercise.
E3	When the autotune algorithm has been set to HYS = A and it calculates a required hysteresis value greater than 10%. Process filtering should be added to reduce the noise seen by the autotuner.

Autotuner Warnings - do not terminate the autotune exercise and are normally eliminated by increasing the % HYS and/or the % DEV settings. In some cases they may have been caused by load changes that occurred during the autotune exercise. The autotuner will still derive recommended tuning values but they will not automatically be transferred to the controller, if that feature was requested. Clear the warnings by pressing the ACK button.

Autotune Warnings

WARNING	DESCRIPTION
W1	Indicates that the % DEV setting is not greater than 4 times the % HYS setting.
W2	Indicates that the process deviations during the first one and a half cycles, where the autotuner first learns about the process gain, were inconsistent.
W3	Indicates that the average % DEV values during the final phase of the autotuning exercise were not greater than 4 times the % HYS setting. If this warning occurs while the % DEV selection was set to A (auto selection of deviation setting), the use of manual entry should be considered.

■

12.0 CONTROLLER AND SYSTEM TEST

This section presents a series of steps to verify 353R controller operation and to help a user become familiar with the functionality of the controller. The procedure requires an optional local faceplate.

A new controller is shipped pre-configured with either Factory Configured Option FCO101 Single Loop Controller or a user-specified custom configuration. The following procedure is for FCO101 with factory set parameter values. If a custom configuration was installed, or if you have configured the controller, it may be necessary to modify the procedure to test all function blocks in that configuration.

In addition, performing the procedure will familiarize the user with local faceplate operation should i|station become disabled. The controller can be operated from the local faceplate. The local faceplate is also a valuable troubleshooting tool.

In the following steps, 'press' indicates a faceplate button (key).

12.1 CONTROLLER CONFIGURATION AND TEST

The purpose of this section is to configure and test the controller and to familiarize the user with the faceplate pushbuttons, pulser, and displays. Refer to Section 11 Local Faceplate Operation as needed.

12.1.1 Connections and Power

1. Connect power to the controller. Refer to the Power Supply Module nameplate for model number and power requirements and Section 8.4 Model 353R-PSC for connections.



WARNING



Electrical shock hazard
Explosion hazard

Can cause death or injury

- Remove power from all wires and terminals before working on equipment.
- In potentially hazardous atmosphere, remove power from equipment before connecting or disconnecting power, signal, or other circuit.
- Observe pertinent regulations regarding installation in hazardous area.



2. Depending upon the configuration, connect test equipment to the I/O terminals.
   - FCO101 - This FCO has one 1-5V analog input (AIN1), and one 4-20 mA analog output (AOUT1) configured. To verify both of these outputs, and to simulate an analog input for subsequent steps, jumper Controller Field Terminals 19 and 34. Connect a 250Ω range resistor from terminal 34 to terminal 35 to convert the 4-20 mA output to a 1-5 volt input. This will tie the valve output (horizontal bargraph) back in the loop as the process input (P bargraph). Refer to Section 9.1 Model 353RCM_ _ _ _B_ as necessary.
   - Custom Configuration - Refer to the configuration documentation and to Section 9.1 Model 353RCM_ _ _ _B_ for connections.
3. Apply power to the controller. Upon power up, a two step test is automatically performed on the alphanumeric display to light all segments. 'WAIT' will then appear on the alphanumeric display while the controller performs power-up diagnostics.
   - If a power-up diagnostic test fails, an error code will be displayed on the alphanumeric display. Refer to Section 13 Maintenance for troubleshooting error codes.
   - If WAIT remains displayed for more than 1 minute, the controller is not powering up correctly and power connections should be checked.

12.1.2 Configuration

1. Determine the current configuration. Use one of the following methods.
   - Refer to your configuration documentation for the controller at hand.
   - Upload the configuration to an i|station or a PC running the i|config Graphical Configuration Utility where the configuration can be viewed. Refer to Section 3 Configuration Overview and to the software guide supplied with the Configuration Utility for procedures.
   - At the local faceplate, enter the configuration mode and step through the configuration recording the configured function blocks and entered parameter values. Refer to Section 3 Configuration Overview and Section 4 Function Blocks as needed.
2. To either proceed with the current configuration or download a new configuration, perform one of the following steps.
   - To load FCO101 locally or to download it (or another configuration) from a PC running the i|config Graphical Configuration Utility, refer to the Configuration section in this manual for a procedure. Refer to the Software Guide supplied with the Configuration Utility for downloading procedures. Then go to step 3.

IMPORTANT

Loading FCO101 or another configuration will overwrite the current configuration and any entries made since shipment. *Do not perform this step if the installed configuration is to be retained.*

   - To proceed with the installed configuration, go to Section 12.1.2.1 Input/Output below.
3. Edit the configuration as desired; refer to Section 12.1.2.3 Modifying an FCO below.

12.1.2.1 Input/Output

Press the D button on the faceplate to scroll through Loop01.S (Setpoint), Loop01.V (Valve Output), and Loop01.P (Process Input). Note from the FCO101 block diagram, that INPUT P is configured as the output from function block AIN1, INPUT S is configured as the output of function block SETPT, and INPUT V is configured as the output of function block A/M.

12.1.2.2 Auto/Manual

In FCO101, the A/M block is configured to switch Valve control from the PID controller in AUTO, to the Pulser Knob in Manual. Press the A/M button to toggle the display between the (Loop01.S) setpoint parameter and the (Loop01.V) valve parameter. Turn the pulser knob while displaying the valve parameter in manual to change the value on the numeric display as well as the horizontal bargraph; turn the pulser knob while displaying the setpoint parameter in Auto to change the numeric value and the vertical S bargraph.

12.1.2.3 Modifying an FCO

In addition to FCO101, Single Loop Control, there are several other factory configured options available, such as Ratio Set Control (FCO105) and Cascade Control (FCO121). To download another FCO follow the steps in Section 3 Configuration Overview.

Changes to an FCO may be made either by adding and deleting function blocks or by changing the default parameter values. A Configuration Road Map is shown in Section 3 Configuration Overview. Note that an X represents pressing the STEP DOWN or STEP UP button and a <> represents turning the pulser knob. For example, to add a function block you would do the following steps:

1. Press ENTER/EXIT CONF.
2. Press STEP DOWN until VIEW is displayed.
3. Turn the pulser knob until ADD FB is displayed.
4. Press STEP DOWN for the function block menu.
5. Turn the pulser knob to scroll through the available function blocks and press STORE to add the function block

to the configuration.

6. To makes changes to a function block parameter turn the Pulser Knob to EDIT FB.
7. Press STEP DOWN for the function Block menu.
8. Turn the pulser knob to the desired Function Block and Press STEP DOWN.
9. The first function block parameter will be displayed. For example, RG PTR for the A/M Transfer Block or MINSCALE for the Analog Input Block. Press STEP DOWN to display current parameter value or use the pulser knob to select a different parameter. Press STORE to save any changes.
10. Press EXIT to return to normal operation mode.

Notice that the SETPT, ALARM, PID, and ODC function blocks in FCO101 all refer to AIN1 as the RG PTR (range pointer) to determine the operating range of the function block. Be aware that making changes to a configuration may require changing referenced RG PTRs. For example, in FCO105 (Ratio Set Control), the PID controller output range is determined by the range of AIN2.

Try changing the default 0-100% range of analog input #1 (AIN1) to 100.0-500.0°F using the Configuration Road Map or the following steps:

1. Press ENTER/EXIT CONF to display LOOP.
2. Press STEP DOWN twice to display VIEW.
3. Turn pulser knob or use arrow button to display EDIT FB.
4. Press STEP DOWN to display Function Block menu.
5. Turn the pulser knob or use right arrow button to display AIN1.
6. Press STEP DOWN to display MINSCALE.
7. Press STEP DOWN to display current 0% of range.
8. Turn the pulser knob to display 1 in the last digit. Display should read “0.00001”.
9. Now press the left arrow (TAG) button. Notice that the decimal place will move one place every time the button is pressed. Press the arrow button until the display reads “100.000” and then press the STORE button.
10. Press STEP UP.
11. Turn the pulser knob or use the arrow button to display MAXSCALE.
12. Press STEP DOWN to display “100.000”.
13. Press the right arrow button until display reads “0.00001”.
14. Turn the pulser knob to change the last digit to 5. Display should read “0.00005”
15. Press left arrow button until display reads “500.000” and press store.
16. Press STEP UP.
17. Turn the pulser knob or the use arrow button to display DPP.
18. Press STEP DOWN. Notice “0.00” or 2 decimal places is the default. Turn the pulser knob to set the number of decimal places to 0.0 or to show 1 decimal place on the display and press STORE button.
19. Press STEP UP and turn the pulser knob or use the arrow button to display ENGUNITS.
20. Press STEP DOWN. Notice that the default units are PRCT.
21. Use the arrow buttons to move the flashing cursor to the space before the P. Now turn the pulser knob to display “D”. Use the arrow button to move to the next position and turn the pulser knob to select “E”. Repeat until display reads DEG F and press the STORE button.
22. Press ENTER/EXIT CONF to return to normal operation.

Try displaying the process and setpoint. Notice that these are now displayed in engineering units scaled 100 to 500 DEG F, or 300 at 50%. Press the UNITS button to display the engineering units configured above.

12.1.2.4 Alarms

Upon power up, FCO101 has 4 alarms enabled:

- Hi alarm at 110% on AIN1
- Lo alarm at -10% on AIN1
- Deviation alarm of 110% between AIN1 and SETPT
- No alarm

1. Press the ALARM/STEP DOWN button to step through the Alarm limits and Enable/Disable Status. Notice all the alarms are enabled and the alarm limits are displayed in engineering units on the numeric display and as a percentage of range by a flashing LED on the S bargraph. If security clearance is satisfied, the alarm limits can be changed by rotating the pulser knob. Try changing the alarm limit A1 to 50% (300 DEG F) and press STORE to save the new value.
2. Press EXIT to return to normal operation mode.
3. Enter manual mode to display Loop01.V.
4. Turn the pulser knob until both the valve output and process input are greater than 50%. Note that the alphanumeric display will flash “A1 HI” and the L and S LEDs will flash. Press the ACK button to acknowledge the alarm.

Alarms have a default priority of 3 (see Alarm block in Section 4 Function Blocks), meaning that the alarms must be acknowledged to clear the flashing. Alarms may also be configured as self clearing. Try changing the alarm priority to 4 using the Configuration Road Map in Section 3 Configuration Overview or the following steps:

1. Press ENTER/EXIT CONF. LOOP should be displayed.
2. Press STEP DOWN twice until VIEW appears on the display.
3. Press the right arrow button 3 times or turn the pulser knob until EDIT FB appears on the display.
4. Press STEP DOWN. A/M will be displayed.
5. Press the right arrow button 3 times or the turn pulser knob until ALARM appears on the display.
6. Press STEP DOWN to display RG PTR
7. Press the right arrow button or turn the pulser knob until A1 PRIOR appears on the display.
8. Press STEP DOWN to display 3 on the numeric display.
9. To change the priority of alarm 1 from 3 to 4, rotate the pulser knob until 4 appears on the numeric display.
10. Press STORE to save the configuration change.
11. Press ENTER/EXIT CONF to return to normal operation.

Try adjusting the process above and below 50% (300 DEG F). Notice that the alarm will clear without pressing the ACK button if the process drops below the alarm limit - deadband. Use the ALARM QUICK button to return the Alarm Limit A1 to the default 110% (540 DEG F) and press STORE to save. Other alarm parameters referenced in the ALARM function block description may be changed in a similar manner.

12.1.2.5 TAG

Press the TAG button. Note that Loop01.* (*= P, S, V, X or Y) will scroll across the screen. To change the tag, refer to Figure 3-1 Configuration Road Map or the following instructions:

Note that although 12 characters are available for the tag, it is suggested that loop names be limited to 6 characters so that the complete tag name will be displayed during normal operation. The additional 6 characters can be displayed by scrolling the tag. The last two digits of the alphanumeric displayed during normal operation will be used to identify the variable currently being displayed, P, S, V, X or Y.

1. Press ENTER/EXIT CONF. LOOP will be displayed.
2. Press STEP DOWN twice until VIEW appears on display.
3. Press the right arrow button or the turn pulser knob until EDIT TAG appears on the display.
4. Press STEP DOWN. LOOP01 will appear on the display with the 1 digit flashing. Use the pulser knob to change the value of the flashing character and press store to save the change. Use the arrow buttons to move to another character. Try changing the TAG to TC101.
5. Press ENTER/EXIT CONF to return to normal operation mode.
6. Press TAG to view tag names longer than 6 characters.

12.1.2.6 QUICK

When in normal operation mode the QUICK button can be used to step through the QUICK SET parameters of any function block which has this feature enabled. In FCO101, the SETPT function block has the QUICK SET feature enabled as a default. Press the QUICK button and note that you can scroll through the following Setpoint features: RAMP ON/OFF, Ramp RATE, TARGET setpoint, and POWER UP SETPOINT. The ramp feature can either use a ramp TIME or a ramp RATE. USE RATE is set to YES as the default (see SETPT function block details in Section 4 Function Blocks).

To see how the Ramp rate works make sure the controller is in AUTO mode and do the following steps.

1. Press QUICK to display RRATE.
2. Rotate the pulser knob to set the ramp RATE to 300 and press STORE. Since the SETPT range pointer is configured for AIN1 scaled 100 to 500 DEG F, 300 will represent a ramp rate of 300 DEG F/min.
3. Press QUICK to display TARGET. Set the target to 250% and press STORE.
4. Press QUICK to display R ON OFF. Turn the pulser knob to change the setting to ON and press STORE.
5. Press ENTER/EXIT to display the setpoint on the numeric display. The setpoint should ramp to 25% in 30 seconds.

To change from a Ramp RATE to a Ramp TIME do the following steps.

1. Press ENTER/EXIT CONF to display LOOP.
2. Press STEP DOWN twice to display VIEW.
3. Press the right arrow button or turn the pulser knob to display EDIT FB.
4. Press STEP DOWN to display A/M.
5. Turn the pulser knob to display SETPT.
6. Press STEP DOWN to display RG PTR.
7. Turn the pulser knob to display USE RATE.
8. Press STEP DOWN to display YES.
9. Turn the pulser knob to change to NO, and press STORE. Press STEP UP.
10. Turn pulser knob counterclockwise or use left arrow button to display RTIME.

11. Press STEP DOWN to display ramp TIME.
12. Turn the pulser knob to set the desired Ramp TIME, and press STORE.
13. Press EXIT to return to normal operation mode.

Now press the QUICK button. Note that the RTIME parameter will now be displayed instead of the RRATE parameter. Setting R ON OFF parameter to "ON" will now ramp the setpoint to the TARGET setpoint in the specified time rather that at a particular rate. See the SETPT description in Section 4 Function Blocks for more details on setpoint functions.

Quickset parameters for other function blocks such as RATIO and BIAS may be changed in a similar fashion. See specific function block descriptions in Section 4 Function Blocks for more details.

12.1.2.7 TUNE

When in normal operation mode, pressing the TUNE button will scroll through the controller tuning parameters and allow activating the AUTOTUNE algorithm. FCO101 is configured for PID control with the AUTOTUNE feature enabled. Press the TUNE button and note that the default values for Proportional Gain (PG), Time-Integral (TI), Time-Derivative (TD), and the Derivative Gain (DG) will be displayed. In addition, the AUTOTUNE parameters % Deviation, % Hysteresis, and Autotune YES/NO will be displayed.

It is difficult to simulate the autotune feature without simulating a process signal but increasing the digital filter parameter on the AIN1 will help make the process seem more realistic. To change the digital filter to a value around 10 follow the Configuration Road Map or do the following steps.

1. Press ENTER/EXIT CONF.
2. Press STEP DOWN twice to display VIEW.
3. Use the right arrow button or the pulser knob to display EDIT FB.
4. Press STEP DOWN for Function Block menu.
5. Use the right arrow button or the pulser knob to display AIN1.
6. Press STEP DOWN for parameter menu.
7. Use the right arrow button or the pulser knob to display DIG FILT and Press STEP DOWN.
8. Rotate the pulser knob to set the digital filter to 10 and press STORE.
9. Press ENTER/EXIT CONF to return to normal operation.

Before initiating AUTOTUNE bring the process to steady state. This can be done by placing the instrument in manual mode and bringing the valve to approximately mid-scale using the pulser knob. Display the process and wait a minute or two for the process to stabilize.

To activate the AUTOTUNE feature:

1. Press the TUNE Quick Button to display AUTOTUNE.
2. Set this parameter to YES, press STORE, then press EXIT. The controller is now set to AUTO and "AUTOTUNE" will flash until the AUTOTUNE is finished. Tuning warnings may occur; refer to Section 11 Local Faceplate Operation. Since this is only a simulation, press ACK to clear any warnings.
3. Press the TUNE button to display the default controller parameters and the resulting AUTOTUNE (ATUNE) parameters. After viewing the parameters, STORE AT will be displayed. Press the STORE button to change the controller parameters to the new values or press the ENTER/EXIT CONF button to keep the defaults.

To cancel the AUTOTUNE before the tuning operation is complete, press the A/M button to enter MANUAL mode. Refer to Section 11 Local Faceplate Operation for more details on the AUTOTUNE feature.

12.1.2.8 View mode

When troubleshooting a configuration, it is often helpful to be able to view the intermediate outputs of function blocks that are not configured as display variables during normal operation. This can be accomplished via the VIEW mode. To enter VIEW mode:

1. Press ENTER/EXIT CONF to display LOOP.
2. Press STEP DOWN to display VIEW.
3. Press STEP DOWN to display the first output of the first configured function block.
4. Use the pulser knob or arrow buttons to scroll through the function block outputs. Note that analog outputs are in engineering units and discrete/status outputs (represented by the black shaded arrows in the Function Block diagrams) are either low (0) or high (1).
5. Press EXIT to return to normal operation mode.

12.2 SYSTEM CHECKOUT

1. Check that the correct circuit boards are installed and fully seated in the case as follows. The controller model number on the P&I drawing should match the model number on the controller's case. Compare the model number to Table 15-1 Model Designations in Section 15 Model Designations and System Specifications to be sure the proper boards are installed.

NOTE

When power is applied to the controller, an installed hardware list can be viewed in the STATN function block. Refer to Section 4 Function Blocks for board description and ID.

2. Check all wiring between the controller and external equipment (e.g. transmitters, recorders, power supplies). Check for correct and secure connections, correct wire gauge and insulation, adequate support (ties, raceways, conduit), and protection from damage (sharp edges, moving equipment, chemicals, abrasion).
3. Test all equipment connected to the controller for proper operation. Refer to the equipment manufacturer's literature as necessary.
4. Apply power to the controller and note the faceplate displays during power up. See above for a description of the faceplate displays during power up.
5. Based on the controller hardware present, the current configuration in the controller, and the external equipment, exercise the system in a systematic manner to ensure proper operation.

■

13.0 MAINTENANCE

This section contains 353R maintenance procedures. It describes preventive maintenance, troubleshooting, error codes, assembly replacement, and software compatibility. Figure 13-1 shows an assembled control carrier. Each 353R system has a control carrier.

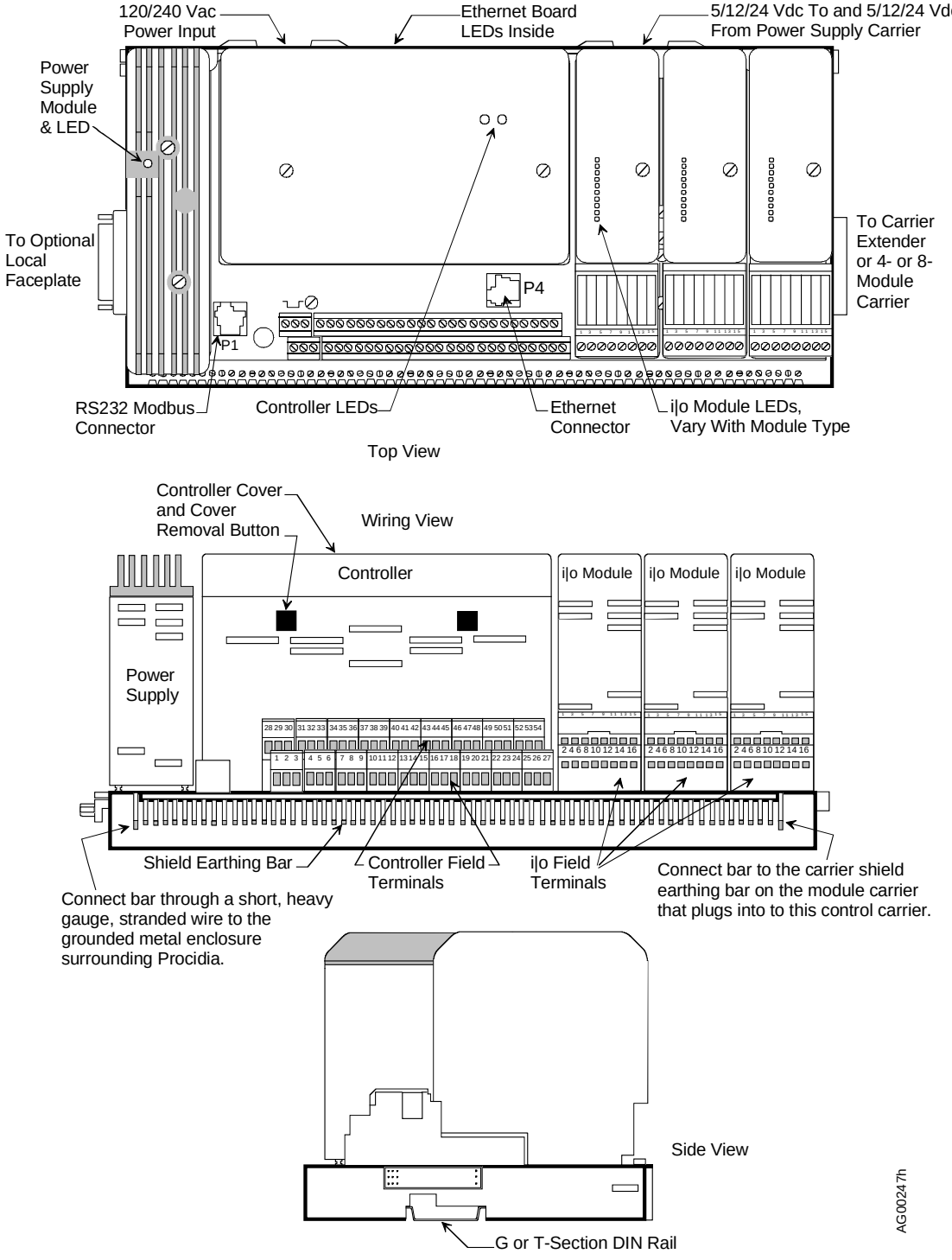

FIGURE 13-1 Assembled Control Carrier

An 8-module carrier is shown in Figure 13-2. Shown in this figure are the connectors for bussed field power needed by some i|o modules and field devices. The dotted, arrowed lines show the modules powered from remote power supplies wired to these connectors. Refer to Section 8.2 Model iO-MC for more information on bussed field power wiring. The 4-module carrier can be thought of as one-half of the 8-module carrier. Most 353R systems will have one or two module carriers.

For maintenance, each module has a series of LEDs to indicate module status and channel condition.

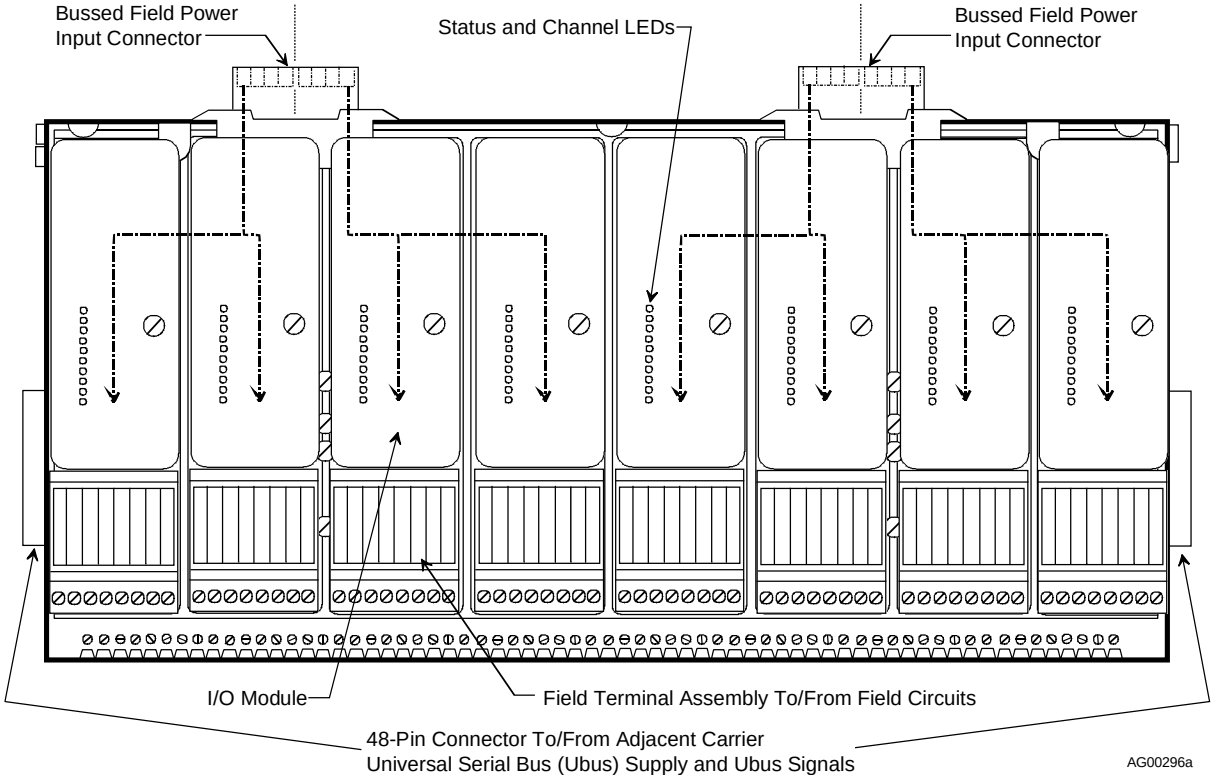

FIGURE 13-2 Assembled 8-Module Carrier

Before servicing or calibrating the equipment, note these warning statements.

- Maintenance should be performed only by qualified personnel. Failure to properly maintain the equipment can result in death, serious injury, or product failure. This manual should be carefully reviewed, understood, and followed.
- The steps in Section 13.3 Preventive Maintenance should be performed regularly.
- The procedures in this maintenance section do not represent an exhaustive survey of the steps necessary to ensure safe operation of the equipment. Particular applications may require further procedures. Should further information be desired or should particular problems arise which are not covered sufficiently for the purchaser's purposes, the matter should be referred to the local Siemens sales office.
- The use of unauthorized parts in the repair of the equipment or tampering by unqualified personnel will result in dangerous conditions that can cause death, serious injury, or equipment damage. Follow all safety instructions contained herein.

IMPORTANT

Table 15-1 Model Designations lists the complete part numbers for adding functionality to an installed 353R and for replacement/service parts.

WARNING



Electrical shock hazard
Explosion hazard

Can cause death or injury



- Remove power from all wires and terminals before working on equipment.
- In potentially hazardous atmosphere, remove power from equipment before connecting or disconnecting power, signal, or other circuit.
- Observe pertinent regulations regarding installation in hazardous area.

13.1 UPGRADING A 353R SYSTEM

The system can be upgraded in the field to add I/O, i|o, or a communication option. As needed, contact the factory to confirm hardware and software compatibility before upgrading. To install an upgrade, you may need to:

- Refer to Section 3 Configuration Overview, Section 4 Function Block, and Section 5 Factory Configured Options (FCOs) and develop a configuration that incorporated the upgrades. Refer to the HMI documentation and develop an application.
- Refer to Section 2 Getting Started in this manual for general information on assembly sequence, i|o addressing and keying, and other details.
- If adding i|o, refer to Appendix A and Appendix B to determine module location and module and system power requirements. Check that the proper field termination assembly for each module is available.
- Refer to the Kit Installation Instruction or other publication that may be supplied with the upgrade.
- Refer to the Assembly Replacement section in this section for information about installing the upgrade.
- Refer to the section for the upgrade for wiring, specifications, and other details. For example, if adding an iO-8AO-H model, refer to Section 9.10. If adding an I/O Expander board, refer to Section 9.1 Model 353RCM_ _ _ _B_.
- Refer to Section 12 Controller and System Test to confirm proper operation.

13.2 TOOLS, TEST EQUIPMENT, AND DOCUMENTATION

The following are necessary for servicing your 353R System.

- Custom documentation supplied with your order
- Literature CD-ROM supplied with your System
- Common hand tools for servicing electronic equipment
- Digital Multimeter (DMM)

  Voltmeter section:

  Accuracy +/-0 .01% of reading
  Resolution 1.0 millivolt Input
  Impedance 10 Megohms

  Ammeter section:

  Accuracy +/- 0.1% of reading
  Resolution 100 microamperes

Use of a static control kit containing a conductive wrist or heel strap and a conductive mat is required when a circuit board assembly is handled for any reason.

13.3 PREVENTIVE MAINTENANCE

The objective for establishing a preventive maintenance program is to provide maximum operating efficiency. Every preventive maintenance operation should assist in realizing this objective. Unless a preventive measure reduces system down time, it is unnecessary. Refer to the custom and CD-based literature supplied with your system for the documents referenced in the following paragraphs.

13.3.1 Environmental Considerations

The 353R has been designed to operate within specified environmental parameters (temperature and humidity). These parameters are listed in Section 15 Model Designations and System Specifications. Additional information concerning environmental contaminants is provided in Section 9.1 Model 353RCM_ _ _ _B_.

13.3.2 Visual Inspection

As part of a periodic maintenance program, visually inspect all system assemblies and wiring. Look for abnormalities such as loose, broken or stressed wires and cables. Look for damaged circuitry and heat stressed parts. Check for excessive dirt or dust build-up that can impede air flow and inhibit proper heat dissipation.

When a power supply carrier is installed and populated with up to three power supply modules, and the power supply status monitor **is not used**, the status LED on each power supply module should be inspected daily. The LED on each operating power supply module must be green, indicating that AC power is applied and the supply is functioning normally. In multiple power supply module installations, when one power supply to fails, the others automatically absorb the load. However, this can result in overloaded power supply modules that can prematurely fail.

When power supply redundancy is employed, a daily inspection is again recommended when the power supply status monitor **is not used**. Here, system performance will not be compromised by a failed power supply module since the operating supplies will continue to supply the needed power. However, redundancy no longer exists and the failure of a second supply will cause a power supply overload condition.

Daily inspection of the power supply LEDs is not needed when the power supply status monitor is used. Refer to Section 8.4 Model 353R-PSC and Section 13.4 Troubleshooting in this section for additional information on the monitor.

13.3.2.1 Cleaning

Circuit boards have a conformal coating for protection against contaminants. Boards should not be cleaned unless accumulated foreign material is causing a problem.

353R Control Module

If cleaning becomes necessary:

1. Protect electronic components from electrostatic discharge. Fasten a conductive wrist strap around your wrist and ground the strap to the earthing shield bar on a carrier, the panel, or to a grounded static dissipative workmat.
2. On the controller carrier, loosen and remove the two screws securing the 353R controller cover.
3. Press on the two cover removal buttons and rotate the cover upward.
4. Pull an individual board or a board stack from the enclosure by grasping a board by an exposed edge.
5. Remove debris from case and board(s) with either a soft brush or low velocity deionized air. Be careful not to dislodge the shunts on jumpers W2 and W8.
6. Insert removed board or board stack into the case and *carefully guide* the connector end of the board until it mates with the connector(s) on the carrier. Only when the connectors are mated should additional force be applied to seat the board.
7. Install the cover. Insert the two thin rectangular tabs on the controller cover into the thin rectangular cutouts in the metal enclosure. Pivot the cover onto the enclosure until the square buttons mate with the square cutouts in the metal enclosure.

8. Install the two previously removed screws. Do not over tighten.
9. Remove the wrist strap.

Local Faceplate

Clean the bezel with a mild, nonabrasive liquid cleaner and a soft, lint-free cloth - do not use a paper towel that may scratch the bezel.

i|o Modules and Field Termination Assemblies

Modules and field terminations should not be disassembled. Low velocity deionized air can be used to remove accumulated dust from a module.

Control and Module Carriers

1. Note the location of each assembly – particularly i|o modules and i|o field termination assemblies as each should be returned to location from which it was removed.
2. Remove accumulated debris with a soft brush or low velocity deionized air.
3. Install each assembly in its original location.

i|station

Refer to the literature supplied with i|station.

13.3.2.2 Circuit Board Handling



ELECTROSTATIC DISCHARGE, ALL ELECTRONIC ASSEMBLIES

Semiconductor devices must be protected from electrostatic discharge. A properly grounded conductive wrist strap must be worn whenever a circuit board assembly is handled or touched. A static control service kit with a conductive wrist or heel strap and a static dissipative workmat is available from most online and local electronic supply companies.

LITHIUM BATTERY

Each MPU Controller board and Real Time Clock/Configuration Backup board has a lithium battery that is not field replaceable. Note the following when handling or disposing of either board.

- Properly dispose of an un-repairable circuit board with a lithium battery
- Do not burn the battery
- Do not place the board on a metal surface or otherwise short circuit battery terminals
- Do not attempt to charge the battery
- If electrolyte is exposed, wear safety glasses and rubber gloves when handling the battery
- For details contact the battery manufacturer

13.4 TROUBLESHOOTING

Troubleshooting 353R is primarily done using LED indications, error codes and assembly replacement. LEDs are located on the control module, power supply, and i|o modules. Error codes are indicated on the Local Faceplate alphanumeric display in response to a failed power-up diagnostic test or to an on-line controller error. The Error Codes section provides a quick reference to identify each code and interpret each code with respect to the type of test or error check, controller response, problem confirmation, and corrective action.

If a malfunction is suspected or indicated by an error code or lighted LED, troubleshooting by assembly substitution is recommended to get the system back on-line in the shortest possible time. The plug-in design of the assemblies permits rapid removal and replacement to isolate a defect. Figure 13-1 shows involved control carrier assemblies (see Sections 8.1 Model 353RCCB_ and 9.1 353RCM_ _ _ _B_). The location of controller I/O circuits on either the MPU Controller board or EXP (I/O Expander) board is shown in Figure 9-4 Control Module Field Terminal Assignments in Section 9 Module Wiring and Specifications. Each module carrier, see Figure 13-2, can hold up to either 4 or 8 i|o modules and i|o field termination assemblies (see Section 8.2 Model iO-(4/8)MC).

If a problem develops upon initial installation of the controller, check the installation wiring and the controller's configuration parameters. In addition, check the wiring of any associated external process devices (e.g. process transmitter, field devices, and bussed field power). Field servicing experience indicates that most initial service incidents are of this nature.

Additional troubleshooting avenues are also possible. For example, a series of test configurations may be created and implemented to 'exercise' different function blocks within the controller. Section 4 Function Blocks describes each function block. This type of troubleshooting analysis is intended to be implemented in an off-line test bench situation.

On-line checks of the controller input and output signals (i.e. analog and digital) can be performed without affecting system operation. However, this type of signal tracing is usually carried out behind an instrument panel. Refer to the section for each assembly for wiring terminal assignments and to your process and instrumentation drawings.

13.4.1 MPU Controller Board Jumpers

MPU Controller board jumpers W2 and W8 are factory set but are often changed in the field. Refer to Section 9.1 Model 353RCM_ _ _ _B_ for the setting of these jumpers.

13.4.2 Controller I/O And i|o Modules

If replacing a circuit board or module has not resolved a problem, check that the involved field devices are properly connected and operating satisfactorily. Also, check that a bussed field power source for a non-isolated circuit or a field power source for isolated circuit is operating normally.

13.4.3 Power Supply Status Monitor

The power supply status monitor is wired by the user to a discrete input channel and configured such that in the event of a power supply module failure, a "fail" indication is displayed at the HMI and a visual or audible alarm is activated. Should the alarm be activated, proceed to the LED Indications section below.

13.4.3.1 LED Indications

LEDs are found on the control module, power supply and i|o modules. Figure 13-1 shows the locations of these LEDs. Each LED state/display is described and troubleshooting suggestions are listed. Normal LED displays during start up are also listed.

Power Supply Module LED

A single green LED is located in the power supply finned heat sink.

ON - AC input power is applied to the power supply and power supply outputs are within specification.
OFF - AC input power is not applied to the power supply or the 5 Vdc, 12 Vdc, or 24 Vdc does not meet specification. A significant current overload may be present (e.g. a short across the 24 Vdc output).
Start Up – When power is supplied, the LED should glow steadily immediately.

Troubleshooting:

- Confirm the failure. Check the power supply fail status at i|station.
- Check AC power input voltage at carrier mounted 120/240 Vac power connector.
- Check for +24 Vdc at controller field terminal 18.
- Check wiring to 24 Vdc field devices. Check the 24 Vdc field devices.
- Replace a power supply module.

Control Module LEDs

A green PWR (power) LED and a two-color (red or yellow) STATUS LED are provided on the edge of the MPU Controller board, visible through the control module cover.

- Green PWR (left-hand LED as shown in Figure 13-1)

  ON – OK
  OFF – Severe Error
  Start Up – Flash several times as microprocessor initializes

  Troubleshooting:

  - Check MPU Controller board seating in control carrier connector.
  - Check Power Supply and AC power input to power supply.
  - Replace MPU Controller board.

- Red STATUS (right-hand LED as shown in Figure 13-1)

  ON Steady – Controller is off-line (100 series error code)
  ON Blinking – Controller off-line (200 series error code)
  Start Up – Flash, extinguish, flash, extinguish

  Troubleshooting:

  - The configuration stored in an RCB or RTC/CB board differs from that stored in the controller.
  - A 100 or 200 series error code exists. Use the local faceplate to read the error code; see the next section.
  - If LED is blinking, press ENTER on a local faceplate to clear the error.

- Yellow STATUS (right-hand LED as shown in Figure 13-1)
  ON Steady – Normal operation, controller on-line and i|o module block outputs are updating.
  ON Blinking – There is a communication failure between the configuration and one or more i|o modules. The controller is on-line but i|o module function block outputs are frozen. During normal configuration, the LED will blink.
  Start Up – Flash until microprocessor initializes and communication is established, then extinguish.

  Troubleshooting:
  - An error code may exist. Use the local faceplate to read the error code.
  - A missing or failed module can cause the faceplate to display "iOnn NC" where nn is the suspect module slot location).
  - A configuration error, such as an incorrect address, may exist.

Ethernet Board

The board is shown in Figure 13-8. It has 5 green LEDs and one red LED. The green LEDs announce status and the red LED flashes to indicate an error code. The LEDs are visible through the rectangular cutouts in the control module cover. The LEDs are:

- ACT - Flashes when there is Ethernet activity. It glows steadily when there is an Ethernet connection but no activity and extinguishes when there is no Ethernet connection.
- F/H - Lighted for full duplex and off for half duplex.
- 100 - Lighted for 100 MB network and off for 10 MB network
- ST - Lighted during self-test and off in normal operation.
- Modbus - When lighted, the green LED indicates an operating Modbus board. The red LED will normally be off. When an error exists, the red LED will flash one second on/one second off with a 5 second pause. Count the number of flashes between two pauses.
  1 flash - Data bus test failure
  2 flashes - Address bus test failure
  3 flashes - Data read/write test failure
  4 flashes - Register 40001 test failure
  5 flashes - Register 40070-40077 test failure
  6 flashes - Flash CRC test failure
  The board is not user serviceable.

The Ethernet board's LED power-up sequence is listed below. It is assumed that an Ethernet connection exists. The ST and Modbus LEDs will flash in the following sequence.

1. Both Modbus LEDs and the ST LED light.
2. The red Modbus LED remains lighted while the other two extinguish. The flashing red LED during a normal startup is not an error indication. The ACT LED will light.
3. The red Modbus and ACT LEDs extinguish and the green Modbus and ST LEDs light.
4. The green Modbus LED remains lighted and the ST LED extinguishes.
5. The Act LED begins to flash, the F/H and 100 LEDs go to the link values, and the green Modbus LED remains lighted.

i|o Module LEDs

LEDs are provided on each module to indicate Power, Fault and channel Status information.
The Power and Fault indicators are common to all I/O modules and their states are shown in the following tables.

Module 'Power' LED (Green)

ON	OFF	FLASHING
Power OK	Power failure	Not applicable

Module 'Fault' LED (Red)

ON	OFF	FLASHING
In "fail-safe" mode or fault exists	Normal operation	Addressing error or in "start-up" mode

Module 'Status' LED (Yellow)

The channel "Status" indicators can have different meanings according to the module type. Indicators are described in the individual module sections.

- Analog Input Module Channel "Status" LED

ON	OFF	FLASHING
Sensor loop OK	Open circuit sensor and channel inactive	Open circuit sensor and channel active OR Error condition

An error (flashing LED) could be due to any of the following conditions:
a) a loss of HART signal
b) an error in the A/D converter

- Analog Output Module "Status" LED (Yellow)

On an AO module, the yellow "Status" LED reacts in the following way to module conditions.

ON	OFF	FLASHING
Field circuit OK	Open circuit field loop and channel inactive	Open circuit field loop and channel active OR Error condition

- Digital Input Module modes

Default / Power-up conditions

On power-up, or if a reset is executed, the configuration will automatically adopt predefined states:
Module mode - Normal (not "fail-safe")
Channel types - All latches and filters are off
Active/Inactive - All channels power-up in the Active state

Status LED (Yellow)

On a DI module, the yellow "Status" LED reacts in the following way to module conditions.

ON	OFF	FLASHING
Channel input "high" or latched	Channel input "low"	N/A (but see note below)

Note: the LED will flash if the input changes state repeatedly.

- Digital Output "Status" LED (Yellow)

On a DO module, the yellow "Status" LED reacts in the following way to module conditions.

ON	OFF	FLASHING
Channel is active and output "high"	Channel is inactive or output "low"	N/A (but see note below)

Note: the LED will flash if the output is made to change state repeatedly.

13.4.4 Error Codes

This section describes off-line error codes, on-line error codes, and on-line status codes. Typically, a code will point to a failed internal assembly or a failed peripheral device. Note that a configuration error can also cause an error code or multiple error codes to be produced.

13.4.4.1 Off-Line Error Codes

Off-line error messages, see Table 13-1, are displayed while the controller is powered but not running function block code and, therefore, not actively controlling a process. Depending on the message, user intervention will most likely be required.

Corrective action can be initiated via the LIL or Modbus ports if appropriate. LIL parameter "SE" located at channel 4, parameter 1 (Modbus register 40002) will contain the hexadecimal form of the error number currently displayed (e.g., ERR: 213 would be sent as $00D5). An Error message can be acknowledged over the network by writing a 0 to the Modbus register or LIL parameter. Messages will be displayed one at a time in the order they occur. They cannot be cleared until the error condition is corrected.

TABLE 13-1 Off-Line Error Codes

Display Format:

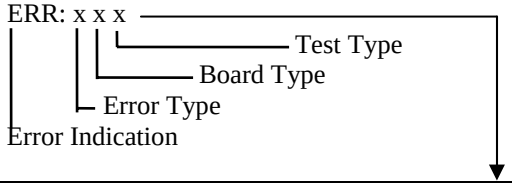

Error Type:		
1	Fatal	The station cannot operate until the source of the error has been corrected.
2	Non-Fatal	Correct error from faceplate or communication port.
Board Type:		
0	MPU Controller	
1	I/O Expander	
2	LIL Network	
3	LonWorks Remote I/O	
8	RCB or RTC/CB	
9	Ethernet Network	

Test Type:		
0	RAM Test	- MPU Controller board - Fatal error, replace board. Press ENTER to repeat test. - Option Board - Station operation suspended. Pressing ENTER will cause all references to blocks relating to the option board to be removed from the configuration and removal of the board from the availability list.
1	Flash CRC Test	- MPU Controller board - Station operation suspended until new code is downloaded. Press ENTER to repeat test. - Option Board - Station operation suspended until new code is downloaded. Pressing ENTER will cause all references to blocks relating to the option board to be removed from the configuration and removal of the board from the availability list.
2	Constant Data CRC Test	Station operation suspended until new constant data is downloaded. Press ENTER to load board specific default constant data.
3	Calibration Data CRC Test	Station operation suspended until ENTER is pressed to load default calibration data.
4	Software Compatibility Test	Station operation suspended until new code is downloaded. Pressing ENTER will cause all references to blocks relating to the option board to be removed from the configuration and removal of the board from the availability list.
5	Database Compatibility Test	Station operation suspended until new constant data is downloaded. Press ENTER to, if possible, convert the database or load board specific default constant data.
6	Board Not Present Error	Station operation suspended. Install the missing board or press ENTER to remove from the configuration all references to the missing board.
7	Hardware Communication (QSPI) Test	Fatal error. Repair or replace as necessary. Press ENTER to repeat test.
8	Board Compatibility Test	Remove the board causing the error and install a compatible board. Ethernet Board - Upgrade Ethernet firmware to V3.0 or higher.

Real Time Clock/Configuration Backup and Removable Configuration Board (RTC/CB and RCB) off-line error codes are listed in Table 13-2. RCB on-line status codes are located in Table 13-3.

TABLE 13-2 RTC/CB and RCB Boards, Off-Line Error Codes

ERROR CODE	DESCRIPTION	CORRECTIVE ACTION
ERR280	Board failed NVRAM test	1) Power down and replace Board. 2) Press ENTER to ACK error. Controller will go on-line using configuration in MPU memory.
ERR282	Configuration on Board failed checksum test and is corrupted.	1) Power down and install a Board containing a valid configuration. 2) Press ENTER to ACK error. Controller will go on-line using configuration in MPU memory that will also be loaded into the Board.
ERR284	Configuration on Board is not compatible with MPU Controller board firmware level. *This will occur only when the Board comes from a controller with a different MPU Controller board firmware level than the current controller and some functions in the configuration database that the current firmware cannot support.*	1) Install MPU firmware compatible with the Board configuration 2) Press ENTER to ACK error. Controller will go on-line using configuration in MPU memory. The configuration will remain intact until a parameter is STOREd, at which time the MPU configuration will be transferred to the Board.

ERROR CODE	DESCRIPTION	CORRECTIVE ACTION
ERR285	Configuration on Board is not compatible with MPU Controller board database. *This will occur only when the Board comes from a controller with a higher MPU Controller firmware level than the current controller. Controller firmware can convert a database created with a lower firmware revision level but not a higher level.*	1) Install MPU firmware compatible with the Board configuration 2) Press ENTER to ACK error. Controller will go on-line using configuration in MPU memory. The configuration will remain intact until a parameter is STOREd, at which time the MPU configuration will be transferred to the Board.
ERR286	The controller powered down with a Board installed but could not identify it on power up. *The board may have been removed or the board ID may be corrupted.*	1) Install a Board or new Board. 2) Press ENTER to ACK error. Controller will go on-line using configuration in MPU memory.
ERR288 (352P, 353, 354, or 354N only)	The LonWorks circuit board currently installed is not compatible with the LonWorks configuration contained on the Board.	1) Power down and install the LonWorks board from the same controller that the Board came from. 2) Press ENTER to ACK error. Controller will go on-line. Any existing LonWorks network data will be used if it is valid, otherwise, it will be set to default values. In either case, the LonWorks network manager will be required to re-establish the network bindings.

13.4.4.2 On-Line Error Codes and Status Codes

These codes can be produced while the controller is running function block and may be actively controlling a process. Depending on the message and its priority level, user intervention may be required or the message may simply be informational in nature. LIL parameter "SE" located at channel 4, parameter 1 (Modbus register $40002) will reflect unacknowledged error or status messages present in the controller. Messages are displayed according to priority until all active messages have been acknowledged. If no link code has been assigned to the active message, the "SE" code will remain at its last value.

Table 13-3 lists on-line error and status codes. For most error codes, replace the involved circuit board to repair the controller. For most status codes, acknowledge or otherwise respond to the situation.

TABLE 13-3 On-Line Error and Status Codes

DISPLAYED CODE	LINK/MODBUS CODE (Hex/Dec)		DESCRIPTION
MPU A/D	$0001	1	MPU Controller board A/D Error
EXP A/D	$0002	2	I/O Expander Board A/D Error
AOUT1 OC	$0003	3	MPU Controller board D/A #1 Open Circuit
AOUT2 OC	$0004	4	MPU Controller board D/A #2 Open Circuit
AOUT3 OC	$0005	5	MPU Controller board D/A #3 Open Circuit
AINU1 AD	$0006	6	I/O Expander Board Universal Analog Input #1 A/D Error
AINU1 TC	$0007	7	I/O Expander Board Universal Analog Input #1 T/C Burnout
AINU1 RJ	$0008	8	I/O Expander Board Universal Analog Input #1 Reference Junction Error
AINU2 AD	$0009	9	I/O Expander Board Universal Analog Input #2 A/D Error
AINU2 TC	$000A	10	I/O Expander Board Universal Analog Input #2 T/C Burnout
AINU2 RJ	$000B	11	I/O Expander Board Universal Analog Input #1 Reference Junction Error
DINU1 E1	$000C	12	I/O Expander Board Universal Digital Input #1 Underflow Error
DINU2 E1	$000D	13	I/O Expander Board Universal Digital Input #2 Underflow Error
LIL ERR	$000E	14	LIL Port Error

DISPLAYED CODE	LINK/MODBUS CODE (Hex/Dec)		DESCRIPTION
LIL NUI	$000F	15	LIL Non Updating Input Error
MOD ERR	$0010	16	Modbus Port Error
LON ERR	$0011	17	LON Port Error
LON NUI	$0012	18	LON Non Updating Error
Watchdog	$0013	19	Watchdog Timeout
LOW BAT	$0014	20	Low NVRAM Battery Voltage
RCB→MEM	$0015	21	Press STORE to load RCB configuration into MPU memory
CYCLTIME	$0016	22	Cycle Time Overrun – see STATN block – add Cycle Time bias
BURNFAIL	$0017	23	Flash Memory burn failed
RCB FAIL	$0018	24	Press ENTER to ACK error and replace RCB
NO EXPBD	$0019	25	Expander board is not installed
PEB FAIL	$001A	26	Ethernet Board failure
IP OVRUN	$001B	27	Ethernet board TCP communication error
MB OVRUN	$001C	28	Modbus communication error
A1 HI	None		Alarm A1 High
A1 LO	None		Alarm A1 Low
A1 HI D	None		Alarm A1 High Deviation
A1 LO D	None		Alarm A1 Low Deviation
A1 DEV	None		Alarm A1 Deviation
A1 OR	None		Alarm A1 Overrange
A2 HI	None		Alarm A2 High
A2 LO	None		Alarm A2 Low
A2 HI D	None		Alarm A2 High Deviation
A2 LO D	None		Alarm A2 Low Deviation
A2 DEV	None		Alarm A2 Deviation
A2 OR	None		Alarm A2 Overrange
A3 HI	None		Alarm A3 High
A3 LO	None		Alarm A3 Low
A3 HI D	None		Alarm A3 High Deviation
A3 LO D	None		Alarm A3 Low Deviation
A3 DEV	None		Alarm A3 Deviation
A3 OR	None		Alarm A3 Overrange
A4 HI	None		Alarm A4 High
A4 LO	None		Alarm A4 Low
A4 HI D	None		Alarm A4 High Deviation
A4 LO D	None		Alarm A4 Low Deviation
A4 DEV	None		Alarm A4 Deviation
A4 OR	None		Alarm A4 Overrange
B1 HI	None		Alarm B1 High
B1 LO	None		Alarm B1 Low
B1 OR	None		Alarm B1 Out of Range
B2 HI	None		Alarm B2 High
B2 LO	None		Alarm B2 Low
B2 OR	None		Alarm B2 Out of Range
B3 HI	None		Alarm B3 High
B3 LO	None		Alarm B3 Low
B3 OR	None		Alarm B3 Out of Range
B4 HI	None		Alarm B4 High
B4 LO	None		Alarm B4 Low
B4 OR	None		Alarm B4 Out of Range
Emeg Man	None		Emergency Manual
Em Local	None		Emergency Local

DISPLAYED CODE	LINK/MODBUS CODE (Hex/Dec)		DESCRIPTION
Standby	None		Standby Sync
Override	None		Override
EMERG OR	None		Emergency Override - PCOM block
INTRLK	None		Interlocked – PCOM block
DFAIL	None		Device Failed – PCOM block
MAX LOOP	None		Maximum Loop Size
S HI Lim	None		Setpoint HI Limit
S LO Lim	None		Setpoint LO Limit
U1 Status	None		User Status #1
U2 Status	None		User Status #2
ATUNE W1	None		Autotuner Warning: hys/desamp >0.2; see Loop Data for 'W#' details
ATUNE W2	None		Autotuner Warning: Deviation Ratio is HI; see Autotune procedure
ATUNE W3	None		Autotuner Warning: Avg. Deviation is LO; see Autotune procedure
ATUNE E1	None		Autotuner Error: limit cycle timeout
ATUNE E2	None		Autotuner Error: process out of range
ATUNE E3	None		Autotuner Error: Only applies when % HYS set to A. Process too noisy.
E In RAM	None		Insufficient Volatile Memory Available
E In Con	None		Insufficient Constant Memory Available
E Db CRC	None		Database CRC/Checksum Error
iO0n NC	None		Ubus Module #n Not Communicating
AIEnn NU	None		AIEnn Function Block Not Updating
CIEnn NU	None		CIEnn Function Block Not Updating
DIEnn NU	None		DIEnn Function Block Not Updating

13.5 ASSEMBLY REPLACEMENT

The following describes replacement of 353R assemblies. Common hand tools for electronic equipment servicing are needed and a torque screwdriver, calibrated in inch-pounds, is recommended. Before handling an assembly, refer to the Circuit Board Handling section for electrostatic discharge prevention procedures. See Figure 13-4 for a view of the controller that shows field replaceable assemblies and individual parts.

There are two jumpers on the MPU Controller board: W2 and W8. Settings are shown in Section 9.1 Model 353RCM_ _ _ _B_, Figures 9-2 and 9-3.

13.5.1 Main Power Fuse

The AC power input fuse or circuit breaker in the wiring to the 353R control carrier or i|power power supply carrier is user supplied. Refer to your Piping and Instrumentation drawing for additional information.

13.5.2 Field Termination Assembly Fuses

Some field termination assembly models have plug-in fuses. To replace a fuse:

1. Remove power from the fused circuit.
2. Open the hinged cover on the top of the assembly.
3. Use a pair of long-nose pliers to gently pull the fuse straight out of the assembly.
4. Install the replacement fuse by aligning the fuse with the opening and pressing it into the assembly.
5. Apply power to the circuit and allow it to operate for several minutes to be sure that a problem does not exist that will cause the replacement fuse to fail.

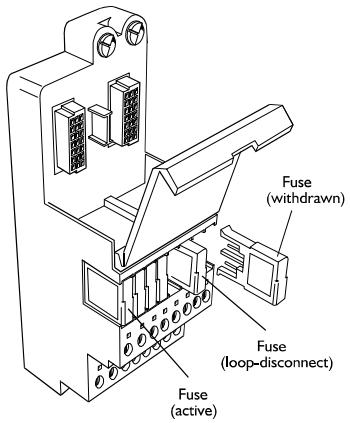

13.5.3 Local Faceplate

To remove and install a local faceplate, refer to either Section 8.5 Model 353R-FHD or Section 8.6 Model 353RFWMB_ or the Kit Installation Instruction supplied with the local faceplate kit. To replace a faceplate bezel or circuit board, refer to the procedure below.

WARNING

Explosion hazard

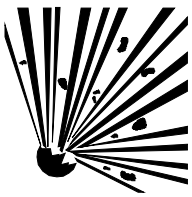

Explosion can cause death or serious injury.

In a potentially explosive atmosphere, remove power from the equipment before connecting or disconnecting the local faceplate, power, signal, or other circuits.

All pertinent regulations regarding installation in a hazardous area must be observed.

NOTE

Replacing a local faceplate with the controller powered and an error code present may cause the displays to light randomly except for the alphanumeric display that will show the error code. Clear the error to clear the displays.

Removal

1. Place a properly grounded wrist strap on your wrist.
2. Free the Local Faceplate from the housing by loosening the two mounting screws on the Faceplate bezel.
3. Pull the Faceplate several inches from the mounting and disconnect the display cable by folding the connector locking tabs outward.
4. Refer to the Faceplate and Figure 13-3 below. Notice that the circuit board is captured by a Fixed Retainer at the top of the Faceplate and a Flexible Retainer at the bottom of the Faceplate. Grasp the body of the black connector at "A" and at the same time press the Flexible Retainer downward slightly. Pull gently on the connector to lift the bottom edge of the board above the Flexible Retainer.

Note

The board is a snug fit. Do not squeeze the bezel sides and make removal more difficult.

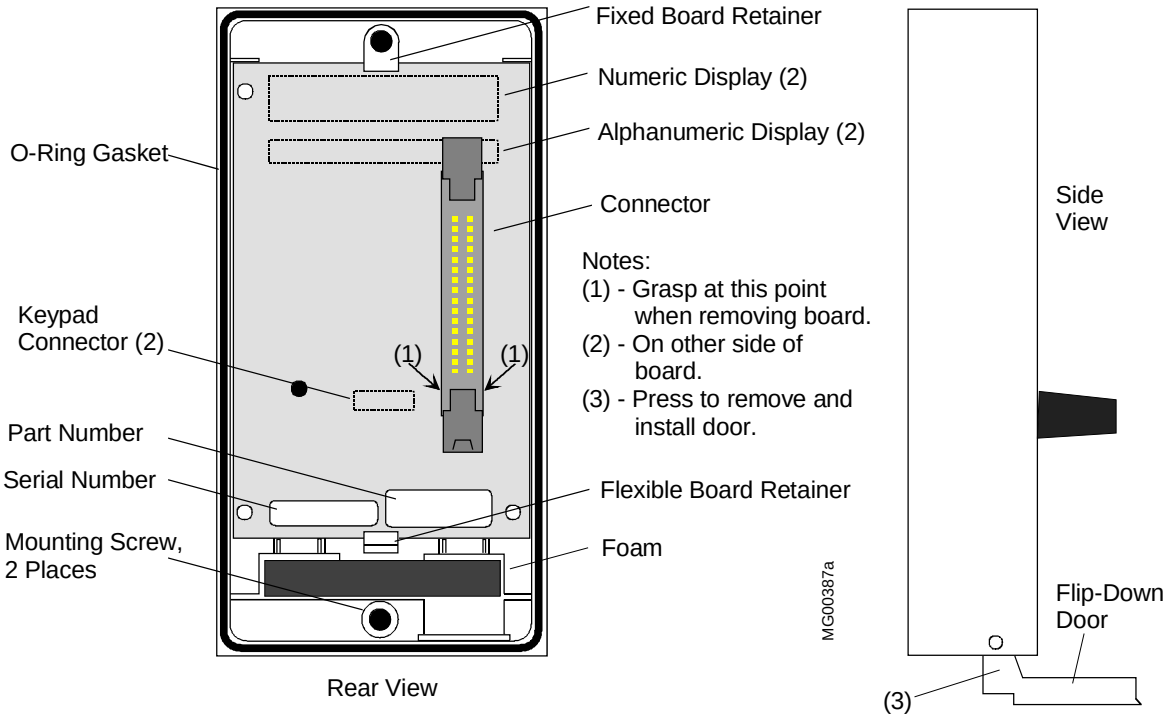

FIGURE 13-3 Local Faceplate

5. Remove the board from the bezel by carefully continuing to lift board while pulling the board out from under to Fixed Retainer at the top of the assembly.
6. If the bezel is being replaced.
   1) Remove the two faceplate mounting screws. Turn the assembly face up and lift each mounting screw upward until the threaded portion contacts the bezel. Turn each screw counterclockwise to unscrew it from the bezel. A screwdriver may be needed once a screw is started.
   2) Remove the drop-down door. See the figure.

Installation

1. Place an anti-static wrist strap on your wrist and connect the ground lead.
2. Get the replacement bezel or circuit board and remove it from the anti-static bag.
3. If the bezel is being replaced, start threading each Faceplate mounting screw into the bezel. Use a screwdriver to

complete screw installation. Install the drop down door; see the figure.

4. Turn the bezel over.
5. Install the circuit board in the bezel by slightly inserting the top edge of board under the Fixed Retainer. The top edge is nearest the Numeric and Alphanumeric Displays.
6. Continue to ease the board under the Fixed Retainer while lowering the bottom edge of the board into the bezel. The board is fully inserted when it snaps under the Flexible Retainer.
7. Install the Faceplate on the housing.

13.5.4 Control Module Circuit Boards

The control module includes the MPU Controller board and can house additional boards depending upon controller model number; see Figure 13-4. Access to the boards in the control module is described below.

Board Access

1. Always protect electronic components from electrostatic discharge. Fasten a conductive wrist strap around your wrist and ground the strap to the earthing shield bar on a carrier, the panel, or a grounded static dissipative workmat.



2. From the 353R controller cover, loosen and remove the two 5-inch (127 mm) long screws securing the cover. See Figure 13-1.
3. Press on the two cover removal buttons and rotate the cover upward. Set cover and screws aside.
4. Pull an individual board or a board stack from the enclosure by grasping a board by an exposed edge. See Figure 13-4.
5. See the individual board comments in the paragraphs below when installing or replacing a board. Then go to Board Installation on a following page.

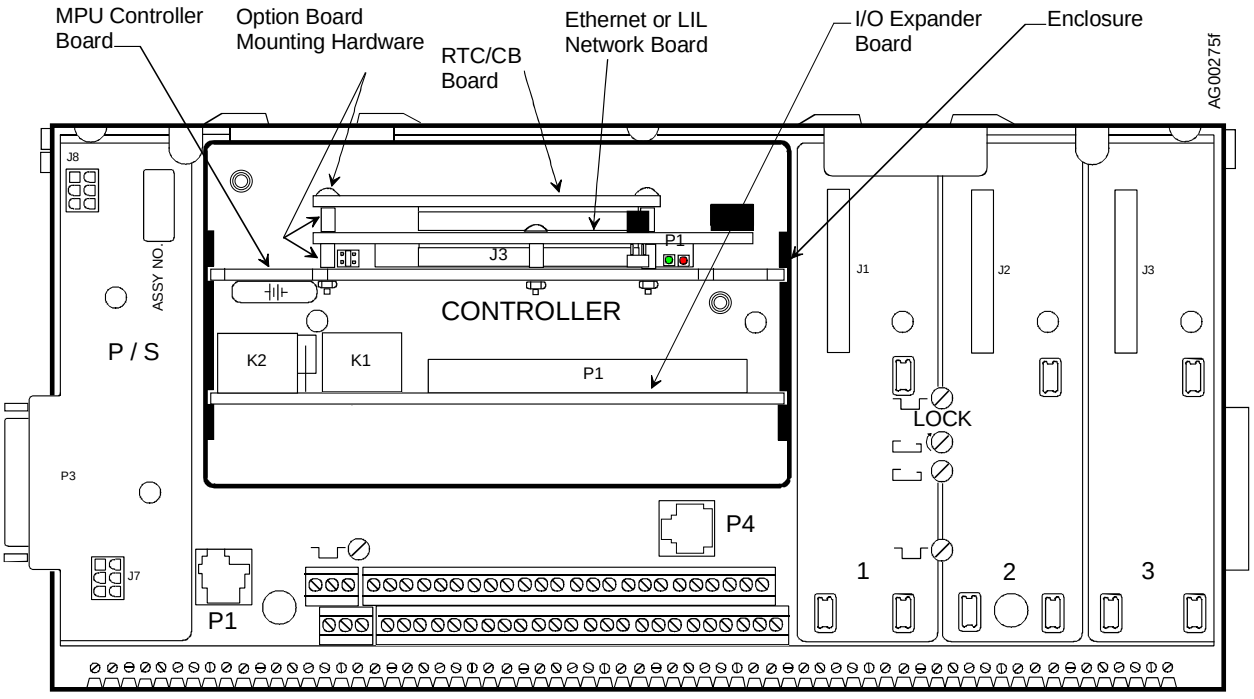

FIGURE 13-4 Control Module Circuit Boards

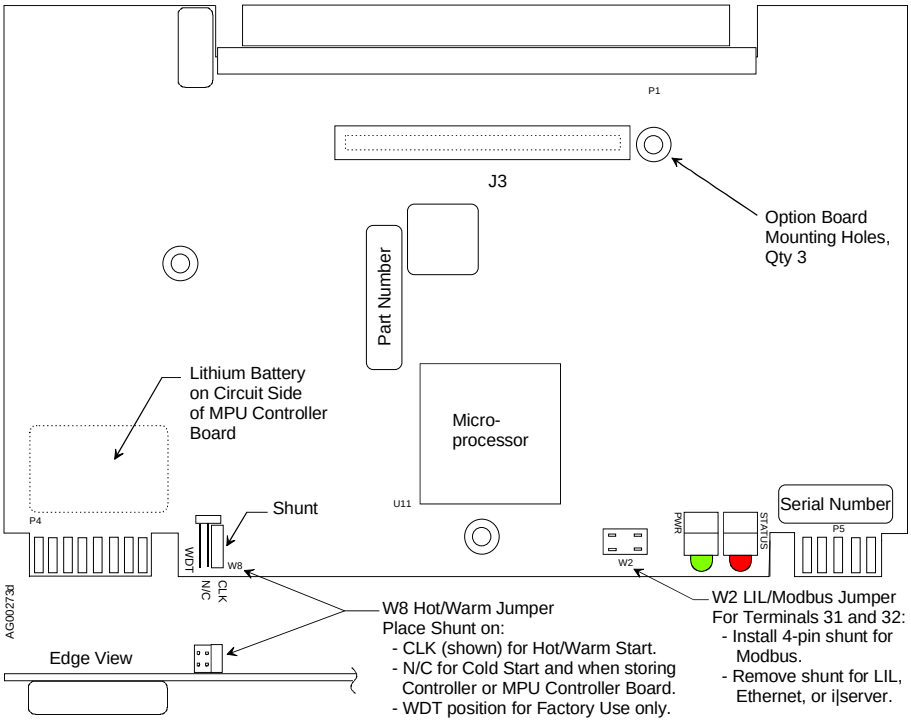

FIGURE 13-5 MPU Controller Board

MPU Controller Board

Refer to Figures 13-4 and 13-5. The board has a lithium battery; refer to the Board Handling Precautions section. After replacing an MPU Controller board, configuration parameters must be re-entered. Refer to Section 3 Configuration Overview and Section 4 Function Blocks as needed. Factory repaired controllers must also be configured.

Be sure to set jumpers W2 and W8 on the replacement board to match the settings on the replaced board.

I/O Expander Board

Refer to Figure 13-4 for board location. The board is shown in Figure 13-6. Follow the Board Installation procedure below to insert the board into the Controller enclosure.

After replacing an I/O Expander board in a control module whose configuration includes an AINU function block: assemble the control module, apply power, ENTER configuration and STORE the SEN TYPE parameter. This must be done even if the SEN TYPE displays the desired type. This will ensure that the function block loads the correct calibration from the new Expander board. If desired, a FIELD CAL can then be performed.

LIL Network Board

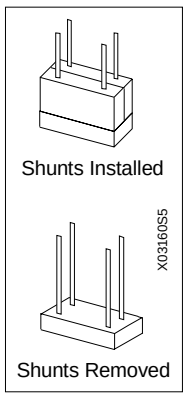

Refer to Figure 13-4 for board location, connection notes, and mounting hardware. See Figure 13-7 shows the board and its LEDs. The board mechanically fastens and electrically connects to the MPU Controller board as shown. Carefully align connectors and apply force to seat them.

W2, the LIL/Modbus Network Jumper, is located on the MPU Controller board and is set as described below.

- Install the shunt(s) when network connections at controller field terminals 31 and 32 are wired for Modbus or there is a connection to P1 on the control carrier.
- Remove the shunt(s) when network connections at terminals 31 and 32 are wired for LIL and a LIL Network board is installed. Save removed shunt(s).

Ethernet Board

Refer to Figure 13-4 for board location, connection notes, and mounting hardware. Figure 13-8 shows the board and its LEDs. The board mechanically fastens and electrically connects to the MPU Controller board as shown. The board also connects to J11 on the control carrier. W2, the LIL/Modbus Network Jumper, is located on the MPU Controller board and must engage J3 on the Ethernet board. If installed, remove the W2 shunt before installing the Ethernet board. Save the removed shunt.

RTC/CB Board

Refer to Figure 13-4 for board location and assembly hardware. The board is shown in Figure 13-9 and typically mounts on and electrically connects to either a LIL Network board, or an Ethernet board. If one of these boards is not installed, the RTC/CB board will mount directly on and electrically connect to the MPU Controller.

IMPORTANT

Before powering the controller after installing an RTC/CB board, connect a local faceplate to the controller. The controller will power up in a hold state and the faceplate is needed to select the controller configuration as described in the following procedure.

Board Installation



1. To install a board, fasten a grounded anti-static wrist strap on your wrist.
2. The MPU Controller board may have several attached boards secured by spacers and screws. Refer to Figure 13-4 for board location and fasteners. Refer to the board comments above for jumpering and other information before attaching a board to the MPU Controller board.
3. Insert the board or board stack into the enclosure card guides and carefully guide the connector end of the board until it mates with the connector(s) on the carrier. Only when the connectors are mated should additional force be applied to seat the board.
4. Install the cover. Insert the two thin rectangular tabs on the controller cover into the thin rectangular cutouts in the metal enclosure. Pivot the cover onto the enclosure until the square buttons mate with the square cutouts in the metal enclosure. See Figure 13-1.
5. Install the two previously removed screws. Do not over tighten.
6. Remove the wrist strap.
7. RTC/CB board only: After installing an RTC/CB board and before applying power to the controller, connect a local faceplate. When power is applied, an RCB->MEM message will appear in the local faceplate's alphanumeric display. This message is prompting you to select the controller's operating configuration. Read the two bulleted items below and select the desired configuration.
   - To copy the configuration stored on the RTC/CB board to the MPU Controller board: rotate the pulser to display YES and press the STORE pushbutton.

     This option is typically selected when a configuration is being transferred from one controller to another by moving the RTC/CB board from one controller to another.

   - To retain the configuration stored on the MPU Controller board: rotate the pulser to display NO and press the STORE pushbutton.

     The configuration stored on the MPU Controller board will be the operating configuration and it will be copied to the RTC/CB board when a change is made to the configuration.

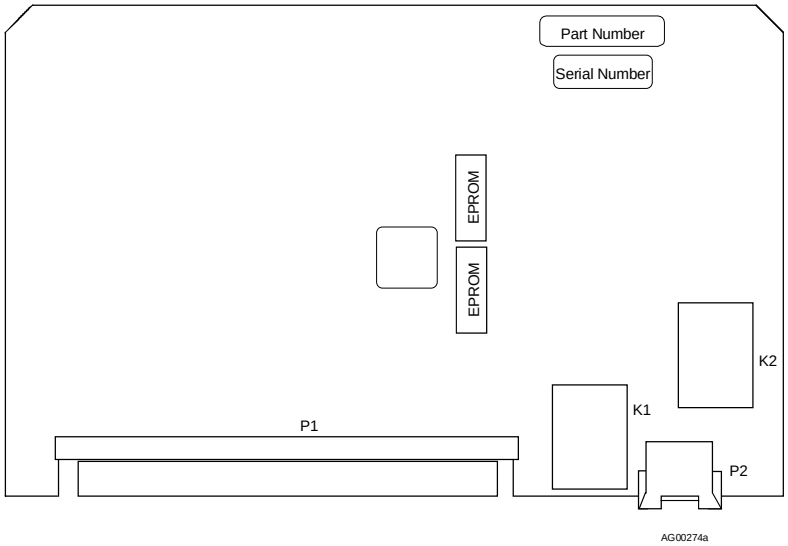

FIGURE 13-6 I/O Expander Board

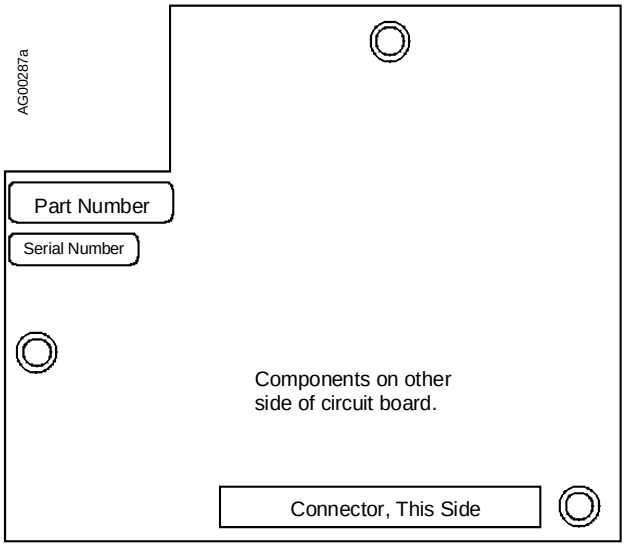

FIGURE 13-7 LIL Network Board

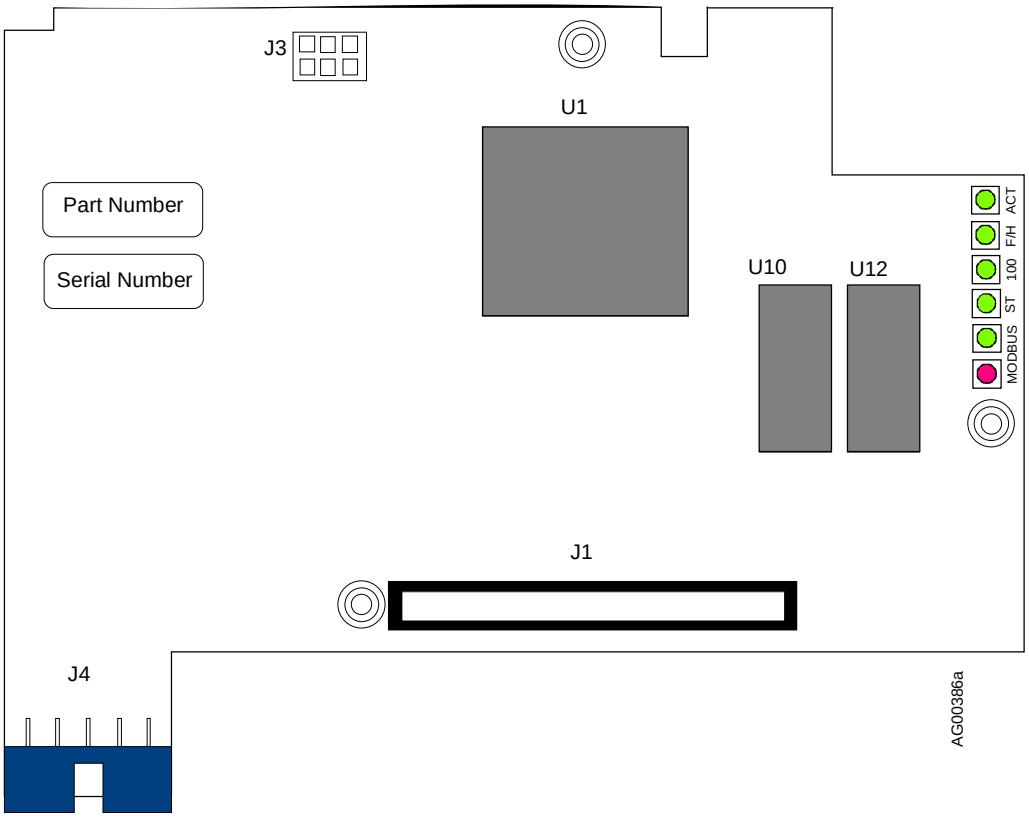

FIGURE 13-8 Ethernet Board

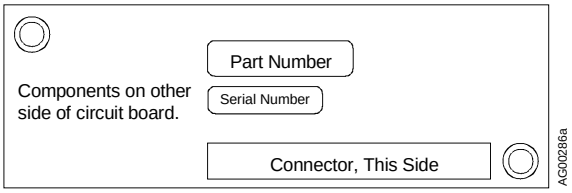

FIGURE 13-9 Real Time Clock/Configuration Backup Board

13.5.5 i|o Modules and Field Termination Assemblies

A single screw secures each i|o module to the carrier. Remove the module and then the related field termination assembly. The recommended steps are provided in Section 2 Getting Started.

WARNING

Explosion hazard

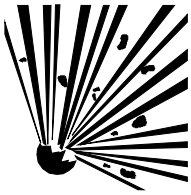

Explosion can cause death or serious injury.

In a potentially explosive atmosphere, remove power from the equipment before unplugging or plugging in an i|o module.

All pertinent regulations regarding installation in a hazardous area must be observed.

14.0 CALIBRATION

A 353R controller is factory calibrated to either the standard values listed in Section 9.1 Model 353RCM_ _ _ _B_ Control Module Installation or to values specified by the purchaser at time of order. Field calibration should not be necessary.

Ubus Analog i|o Modules

The analog i|o modules are factory calibrated to either the standard values listed in each module's section (e.g. Section 9.9 Model iO-8AO Module) or to values specified by the purchaser at time of order. Field calibration should not be necessary. However, Analog i|o modules have a trim feature that can be used to trim out small errors or shift the factory calibration to meet a local standard. For additional information, refer to the module's function block description in Section 4 Function Blocks.

353R Analog I/O

For those cases where 353R analog inputs or outputs must be adjusted either to meet a local standard or for a more critical application, a field calibration can be performed. The field calibration becomes the default calibration.

A CAL VIEW mode is available in calibration to view the sensor input over the full range. The signal that is viewed, in the calibration verify mode, is 0 to 100% of span in basic units of measure (e.g., °C for temperature, mv for millivolts) and is not affected by the temperature units conversion, digital filter, scaling, or the output bias adjustment. The full block output in engineering units with these parameters applied can be seen in the VIEW mode within loop configuration.

This section describes calibration and calibration verification of the following seven function blocks:

AIN1-4	- **A**nalog **In**put	MPU board (3) and I/O Expander board (1)
AOUT1-3	- **A**nalog **Out**put	MPU board (2) and I/O Expander board (1)

Calibration of an AINU1 or AINU2 function block is described in Section 4 Function Blocks.

When field calibrating a controller for a critical application, consider the following:

- If the input is a current signal (e.g., 4-20 mA), use a precision current source. The 250Ω precision range resistor installed across the input terminals for calibration should remain with the station, connected across that set of terminals, to eliminate the voltage drop variation due to resistor tolerance.

- Allow the Station to warm-up for an hour prior to calibration. The ambient temperature should be close to normal operating conditions.

The controller must be off-line during calibration. Factory calibration values are listed in Section 9.1 Model 353RCM_ _ _ _B_.

Refer to Section 9.1 Model 353RCM_ _ _ _B_ for controller field terminal identification and for wiring diagrams showing power input, signal input and signal output terminals.

Security, Calibration of Inputs/Outputs: If level 1 and level 4 security are enabled, the user-determined six-digit security combination (e.g. 000025) for either level 1 or level 4 must be entered before new calibration parameters can be stored. Once the security combination has been entered, access will be provided to all functions with that security level until the user exits configuration. For additional information, refer to function block SECUR - Security in Section 4 Function Blocks.

Bargraphs: The bargraphs on the Display Assembly are not used during the calibration procedure. Ignore any bargraph indications during calibration.

Calibration and calibration verification are described in the following procedures.

14.1 ANALOG INPUT (AIN1-4)

Analog input function blocks have been factory calibrated for 1 to 5 Vdc inputs. Field calibration should not be required unless calibration parameters are to be changed. Periodic calibration should not be necessary. To calibrate an analog input, use the following procedure.

1. At the controller's rear terminals, connect an electronic calibrator or precision reference source capable of supplying a voltage between 0.000 and 5.000 Vdc to the selected analog input terminals (e.g. AIN1). Refer to Section 9.1 Model 353RCM_ _ _ _B_ for terminal numbers and wiring guidelines. Ensure that terminal screws are tight.
2. If security is enabled, a level 1 or level 4 security combination will be needed to store the results of a calibration. Refer to SECUR-Security in Section 4 Function Blocks for additional information.
3. Apply power to the station.
4. Press the ENTER CONF button to enter the configuration mode at the MENU level.
5. Rotate the Pulser Knob to select 'STATION' on the alphanumeric (lower) display.
6. Press the STEP DOWN button to choose options at the station level and rotate the Pulser Knob to select 'CAL' on the alphanumeric display.
7. Press the STEP DOWN button to enter the FUNCTION BLOCK level.
8. Rotate the Pulser Knob to select the desired input (e.g. AIN1 or AIN2).
9. Press the STEP DOWN button to enter the PARAMETER level.
10. Rotate the Pulser Knob to select the desired parameter, CAL ZERO, shown on the alphanumeric display.
11. Press the STEP DOWN button to enter the VALUE level ('CAL' appears on upper display).
12. Set the precision voltage source to the zero input value (0.000 to 1.000 Vdc).
13. Press STORE to lock-in the desired value. If ENTER COM appears in the alphanumeric display, security is enabled and steps 1) through 5) must be performed to store the calibration. Otherwise, go to step 14.
    1) The numeric display shows 000000 with the right-most digit flashing. Rotate the pulser knob to set the units digit to the correct number.
    2) Press the TAG/← key to select the next digit, the tens digit.
    3) Rotate the pulser knob to select a number for that digit.
    4) Move to and select the needed number for each remaining digit.
    5) Press ENTER. If the combination entered is incorrect, "ACCESS/DENIED" will be displayed and the controller will return to the parameter level. Otherwise, go to step 14.
14. Press the STEP UP button.
15. Rotate the Pulser Knob to select the 'CAL FULL' parameter.
16. Press the STEP DOWN button to enter the VALUE level ('CAL' appears on upper display).
17. Set the voltage source to the full scale input value (4.000 to 5.000 Vdc).
18. Press STORE.
19. For verification perform the following steps:
    1) Press STEP UP button.
    2) Rotate Pulser Knob to select 'CAL VIEW' parameter.
    3) Press STEP DOWN button to enter VALUE level.
    4) Set precision voltage source to zero input voltage. The display should read 0%.
    5) Set source to full scale voltage. The display should read 100%.

20. If all points have been calibrated and verified, press EXIT button to leave the calibration mode and enter the operation mode. If additional function blocks are to be calibrated and verified, press the STEP UP button to enter the FUNCTION BLOCK level. Perform steps 2 -19 for each function block.

If security is enabled, exiting the configuration mode will lock out the calibration mode until the security combination is re-entered.

14.2 ANALOG OUTPUT (AOUT1-3)

Analog output function blocks have been factory calibrated to 4-20 mAdc outputs. If field calibration is necessary, use the following procedure.

1. At the controller's rear terminals, connect an electronic calibrator or digital multimeter capable of displaying 4.00 and 20.00 mAdc to the selected analog output terminals (e.g. AOUT1). Refer to Section 9.1 Model 353RCM_ _ _ _B_ for terminal numbers and wiring guidelines. Ensure that terminal screws are tight.
2. If security is enabled, a level 1 or level 4 security combination will be needed to store the results of a calibration. Refer to SECUR-Security in Section 4 Function Blocks for additional information.
3. Apply power to the station.
4. Press the ENTER CONF button to enter the configuration mode at the MENU level.
5. Rotate the Pulser Knob to select 'STATION' on the alphanumeric (lower) display.
6. Press the STEP DOWN button to choose options at the station level and rotate the Pulser Knob to select 'CAL' on the alphanumeric display.
7. Press the STEP DOWN button to enter the FUNCTION BLOCK level.
8. Rotate the Pulser Knob to select the desired output: AOUT1 or AOUT2.
9. Press the STEP DOWN button to enter the PARAMETER level.
10. Rotate the Pulser Knob to select the desired parameter, CAL ZERO, shown on the alphanumeric display.
11. Press the STEP DOWN button to enter the VALUE level ('CAL' appears on display).
12. Rotate the Pulser Knob to set the zero output to 4.00 mA on the digital multimeter or electronic calibrator.
13. Press the STORE button to lock-in the desired value. (If "ENTER COM" appears in the alphanumeric display, go to Section 12.1 Controller Configuration and Test, step 13 for entering a level 1 or level 4 security combination.)
14. Press the STEP UP button. Rotate the Pulser Knob to select the 'CAL FULL' parameter**.**
15. Press the STEP DOWN button to enter the VALUE level ('CAL' appears on display).
16. Rotate the Pulser Knob to set the full scale output to 20.00 mA.
17. Press STORE. For verification perform the following steps:
    1) Press STEP UP button.
    2) Rotate Pulser Knob to select 'CAL VIEW' parameter.
    3) Press STEP DOWN button to enter VALUE level.
    4) Rotate Pulser Knob to set display to 0.0%. Output current should be 4.00 mA.
    5) Rotate Pulser Knob to set 100.0%. Output current should be 20.00 mA.
18. If all points have been calibrated and verified, press EXIT button to leave calibration mode and enter operation mode. If additional function blocks are to be calibrated and verified, press STEP UP button to enter FUNCTION BLOCK level. Perform steps 2-19 for each function block.

If security is enabled, exiting the configuration mode will lock out the calibration mode until the security combination is re-entered.

■

15.0 MODEL DESIGNATIONS AND SYSTEM SPECIFICATIONS

This section provides model designation information, a list of accessories, system environmental specifications and agency certification and hazardous area installation information.

IMPORTANT

Before installing or servicing this equipment, always refer to the equipment labels and this section for model designation, specification, and agency approval information.

Each assembly is identified by one or more labels. Label locations are either shown or described in Figure 15-1 below.

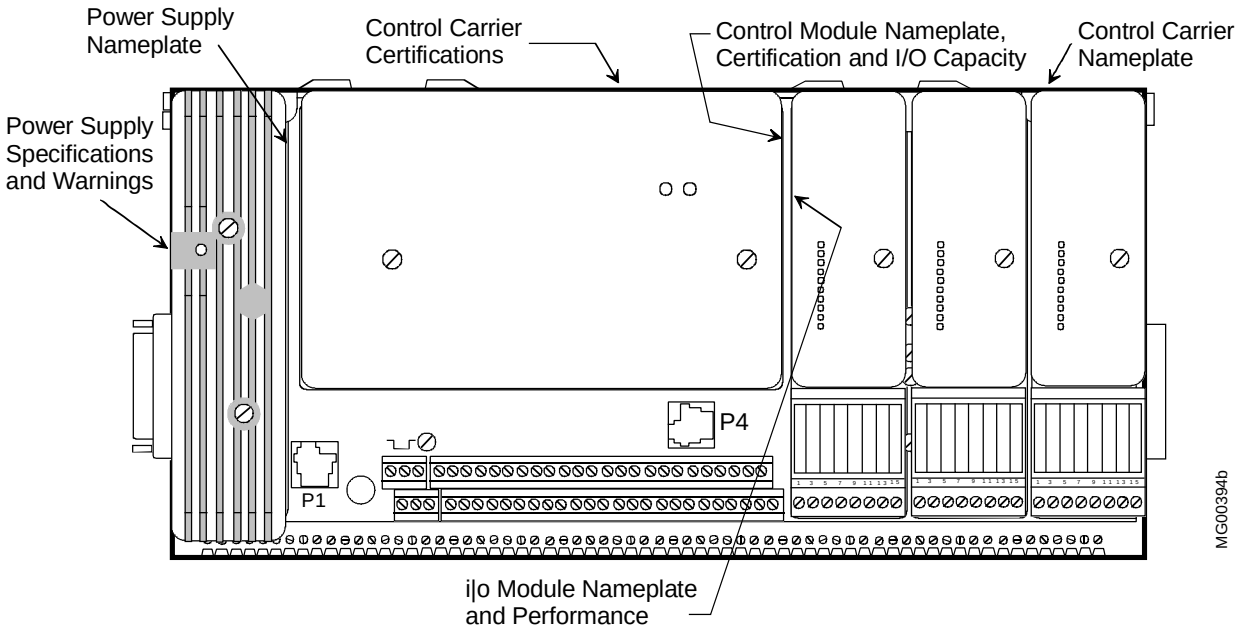

Other Assemblies:
Module Carrier - Labels locations are similar to the Control Carrier.
Power Supply Carrier - Label locations are similar to the Control Carrier.
Local Faceplate - Labels are located on the Housing and inside the drop-down door.
i|station - Labels are on the back of the unit above the connectors.

FIGURE 15-1 Equipment Label Locations

15.1 MODEL DESIGNATION

Table 15-1 Model Designations lists assembly model numbers. The model designation appears on a nameplate on each assembly. A nameplate may provide:

- Assembly Name, Model Number, and Serial Number (may be on a circuit board in the assembly)
- Bill of Material number (B/M No.)
- Electrical Specifications (e.g. Power Supply Module)
- Certifications

Model 353R Hardware Design Levels – Model 353R is design level "B" as indicated by the next to last character in each carrier and module model designation (e.g. TGX:353RCMEENN**B**4) except for the power supply module which is design level "D".

Approvals and Certifications – These are indicated by the last character in a model designation with a "353R" prefix. In the table below, an underscore reserves this location. At the time this manual was published, the following characters and corresponding approvals/certifications were available. Visit the Siemens web site or contact the Process Industries Division of Siemens Industry for the latest information; refer to Section 1.6 Customer/Product Support for the URL.

N - Not Required
4 – FM/CSA

i|station must be installed in a non-hazardous environment.

IMPORTANT

Always confirm an assembly's model/part number before installing, applying power, or servicing. When ordering always provide the complete model number.

When circuit boards are added to a controller in the field, nameplate information will not reflect the current physical configuration.

TABLE 15-1 Model Designations

MODEL NUMBER	DESCRIPTION
353R Controller	
TGX:353RCMNNNNB_	353R Controller Module (MPU*)*
TGX:353RCMNLNNB_	353R Controller Module (MPU + LIL)
TGX:353RCMNENNB_	353R Controller Module (MPU + Ethernet)
TGX:353RCMNNRNB_	353R Controller Module (MPU + RTC/CB)
TGX:353RCMNLRNB_	353R Controller Module (MPU + LIL + RTC/CB)
TGX:353RCMNERNB_	353R Controller Module (MPU + Ethernet + RTC/CB)
TGX:353RCMENNNB_	353R Controller Module (MPU + EXP)
TGX:353RCMELNNB_	353R Controller Module (MPU + EXP + LIL)
TGX:353RCMEENNB_	353R Controller Module (MPU + EXP + Ethernet)
TGX:353RCMENRNB_	353R Controller Module (MPU + EXP + RTC/RCB)
TGX:353RCMELRNB_	353R Controller Module (MPU + EXP + LIL + RCB/CB)
TGX:353RCMEERNB_	353R Controller Module (MPU + EXP + Ethernet + RTC/CB)
353R Power Supply	
TGX:353RPSUAD_	353R Power Supply Universal AC (compatible with Design Level "B" hardware)
353R Control Carrier	
TGX:353RCCB_	353R Controller Carrier
353R Power Supply Carrier	
TGX:353RPSCB_	Power Supply Carrier
353R Local Faceplate	
TGX:353RFHDB_	353R Local Faceplate, Hand Held and Panel Mounting
TGX:353RFWMB_	353R Local Faceplate, DIN/Wall Mounting

MODEL NUMBER	DESCRIPTION
i|config Graphical Configuration Software	
iCONFIG-Vx.xx	i|config Graphical Configuration Software - Windows® 95, 98, 2000, NT, and XP compatible software for configuring the 353R controller and creating a function block diagram. Transfer configurations via the built-in control carrier P1 connection, Modbus network, or LIL network connection. Vx.xx - the latest software version will be supplied.
i|station Flatpanel LCD Operator Interface	
TGX:iSTATION1501D	15" Monitor, Windows XP (includes iWARE-B05 and iCONFIG)
TGX:iSTATION1502D	15" Monitor, Windows XP (includes iWARE-E05 and iCONFIG)
TGX:iSTATION1503D	15" Monitor, Windows XP (includes iWARE-E15 and iCONFIG)
TGX:iSTATION1504D	15" Monitor, Windows XP (includes iWARE-EUL and iCONFIG)
TGX:iSTATION1505D	15" Monitor, Windows XP (includes iWARE-B05)
TGX:iSTATION1506D	15" Monitor, Windows XP (includes iWARE-E05)
	Note: Models TGX:iSTATION150#**C** include Windows NT operating system. Included applications are as listed above.
i|station Accessories	Table Top Mounting Stand for Monitor, PN 16357-204 Keyboard and Mouse, PN 16357-205 Y-Cable Adapter for Keyboard and Mouse (included with i|station), PN 16357-206
i|ware-PC Operator Interface Software	
TGX:WAREB05V#.##	Basic PC Edition (includes GraphWorX, TrendViewer, 500 point count)
TGX:WAREE05V#.##	Enterprise PC Edition (includes GraphWorX, TrendWorX, AlarmWorX, 500 points)
TGX:iWAREE15V#.##	Enterprise PC Edition (includes GraphWorX, TrendWorX, AlarmWorX, 1500 points)
TGX:iWAREEULV#.##	Enterprise PC Edition (includes GraphWorX, TrendWorX, AlarmWorX, unlimited points)
TGX:iWAREOPCV#.##	PC OPC Servers (for use in applications other than GraphWorX)
Note-V#.## Latest version will be supplied	
i|o Modules	
iO-8DI24DSI	8-channel DI, 24Vdc sinking isolated
iO-8DI24DMN	8-channel DI, 24Vdc module powered non-isolated
iO-16DI24DSI	16-channel DI, 24Vdc sinking isolated
iO-16DI24DMN	16-channel DI, 24 Vdc module powered non-isolated
iO-8DI115ASI	8-channel DI, 115 Vac sinking isolated
iO-8DI115AMN	8-channel DI, 115 Vac module powered non-isolated
iO-8DI230ASI	8-channel DI, 230 Vac sinking isolated
iO-8DI230AMN	8-channel DI, 230 Vac module powered non-isolated
iO-8DO60DEI	8-channel DO, 2-60 Vdc external powered isolated
iO-8DO60DMN	8-channel DO, 2-60 Vdc module powered non-isolated
iO-8DO250AEI	8-channel DO, 20-250 Vac external powered isolated
iO-8DO250AMN	8-channel DO, 20-250 Vac module powered non-isolated
iO-8AI-2H	8-channel AI, 4-20 mA, 2-wire transmitter HART
iO-8AI-2	8-channel AI, 4-20 mA, 2-wire transmitter
iO-8AI-V	8-channel, AI, 1-5 Vdc
iO-8AO	8-channel AO, 4-20 mA
iO-8AO-H	8-channel AO, 4-20 mA, HART
iO-4AI-4AO	4-channel AI, 4-channel AO, 4-20 mA Discontinued
iO-4TC	4-channel T/C, mV input
iO-4RT	4-channel RTD input

MODEL NUMBER	DESCRIPTION
Field Terminals	
iO-STC-FT	Thermocouple
iO-SRT-FT	RTD
iO-SST8-FT	Standard, unfused (Div 2) 8-channel
iO-FST8-FT	Standard, fused (Dive 2) 8-channel
iO-SNI8-FT	Standard, non-incendive (Div 2) 8-channel
iO-FNI8-FT	Fused, non-incendive (Div 2) 8-channel
iO-SNA8-FT	Standard, non-arcing (Div 2) 8-channel
iO-FNA8-FT	Fused, non-arcing (Div 2) 8-channel
iO-SNI16-FT	Standard, non-incendive (Div 2) 16-channel
iO-S4W8-FT	Standard, non-incendive (Div 2) 8-channel 4-wire (for transmitter or similar field device)
Module Carriers	
iO-8MC	8-Module i|O carrier
iO-4MC	4-Module i|O carrier
Interconnects	
iO-RCE	Carrier extender, right hand
iO-LCE	Carrier extender, left hand
Interconnect Cables	
iO-CEC085	Carrier extension cable, 0.85m (33.46in)
iO-CEC120	Carrier extension cable, 1.20m (47.24in)
Accessories, General	
iO-MBK	Module blanking kit (pack of 2)
iO-TSK	Tag strip kit (pack of 10)
iO-RFK	Termination assembly replacement fuse kit, 2A, (pack of 10)
15124-1	24 Vdc, 2A Power Supply
15124-3	12 Vdc, 3A Power Supply
15124-4	DIN Rail Mounting Clips, one pair, for either of the above Power Supplies
16354-30	Installation Kit (contains 3, 250Ω range resistors and 6, crimp-on connectors) supplied with Control Carrier
16353-49	Range Resistor and Reference Junction Kit (contains 1, 250Ω range resistor; 2, 3.75Ω range resistors; 6, crimp-on connectors; and 2, 100Ω TC reference junctions) supplied with Control Carrier
16139-226	Entrelec RS232/RS485 Converter Module
Spare Parts	
16357-38	353R MPU Board Kit
16357-39	353R Expander Board Kit
16297-22	353R LIL Board Kit
16357-34	353R RTC/CB Board Kit
16357-43	353R Ethernet Kit

15.2 COMMUNICATION ACCESSORIES

The following table lists the accessories currently available.

ACCESSORY	PART NUMBER	DESCRIPTION
Communications Cable	16353-61	Connects MMJ11 on control carrier (P1) to MMJ11 on serial port adapter. Select one of the following adapters.
Adapter, DB25 to MMJ11	16353-62	Adapts personal computer serial port to above Communications Cable.
Adapter, DB9 to MMJ11	16353-63	

15.3 ASSEMBLY SPECIFICATIONS

Most specifications for an assembly will be found in the section devoted to that assembly. A list of those sections follows. System environmental specifications are found in the section below.

Control Carrier Dimensions.....See Section 8.1 Model 353RCCB_
Module Carrier Dimensions .....See Section 8.2 Model iO-(4/8)MC
Carrier Extender Dimensions .....See Section 8.3 Model iO-(R/L)CE
Power Supply Carrier Dimensions .....See Section 8.4 Model 353R-PSC
Local Faceplate Dimensions.....See Section 8.5 Model 353RFHDB_ or 8.6 Model 353R FWMB_
i|station Dimensions.....See Section 10 i|Station Installation

Control Module I/O Electrical Specifications.....See Section 9.1 Model 353RCM_ _ _ _B_
Power Supply Module Electrical Specifications.....See Section 9.2 Model 353RPSUAD_
i|o Module Electrical Specifications.....See Section 9 for each i|o module (e.g. Model iO-4TC)
i|station Electrical Specifications.....See Section 10 i|Station Installation

15.4 ENVIRONMENTAL SPECIFICATIONS

Mounting, Typical Location:.....Protected area

Temperature Limits:
Operating:.....0 to 50°C (32 to 122°F)
Storage: .....-40 to 85°C (-40 to 185°F)

Climatic Conditions:.....IEC654-1 (Class B3)
Corrosive Conditions:.....IEC 654-4 (Class 2)

15.5 AGENCY CERTIFICATIONS

Listed below are the certifications awarded at the time this manual was printed. Contact the Process Industries Division of Siemens E&A for current certifications. A label on each affected assembly lists the applicable agency approvals and certifications.

FM/CSA - Class I, Division 2 hazardous locations (The Ethernet board was not approved at the time this manual was prepared.)

15.5.1 Special Conditions for Safe Use

FM/CSA

This section provides FM/CSA hazardous location precautions that should be observed by the user when installing or servicing the equipment described in this Manual and in the Hazardous Area Installation supplement PN 15032-P100.

WARNING

Explosion hazard

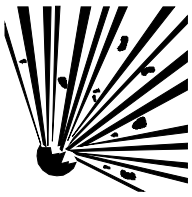

Explosion can cause death or serious injury.

Failure to observe the following precautions could result in an explosion hazard.

All pertinent regulations regarding installation in a hazardous area must be observed.

Precautions - English

For Class I, Division 2 hazardous locations:

Use only factory-authorized replacement parts. Substitution of components can impair the suitability of this equipment for hazardous locations.

For Division 2 hazardous locations:

Install the equipment in a suitable enclosure in accordance with ANSI/ISA S82.01 and S82.03.

When the equipment described in this Manual is installed without safety barriers, the following precautions should be observed. Switch off electrical power at its source (in non-hazardous location) before connecting or disconnecting power, signal, or other wiring.

Mount a prominent warning label near the equipment that states that cables may not be connected or disconnected unless the area is known to be non-hazardous.

Précautions - Français

Emplacements dangereux de classe I, division 2 :

N’utiliser que des pièces de rechange agréées par l'usine. La substitution de composants peut rendre cet appareil impropre à l'utilisation dans les emplacements dangereux.

Emplacement dangereux de division 2 :

Installer l’appareil dans une enceinte appropriée conformément aux stipulations d’ANSI/ASA S82.01 et S82.03.

Lorsque l'appareil décrit dans la notice ci-jointe est installé sans barrières de sécurité, couper l'alimentation électrique à la source (hors de l'emplacement dangereux) avant d'effectuer le branchement ou débranchement d'un circuit de commande, de signalisation ou autre.

Installer une étiquette d'avertissement dans un endroit bien en vue à proximité de l'appareil, qui stipule que le branchement ou débranchement des câbles est interdit, sauf si l'emplacement est confirmé comme étant non dangereux.

FM

Enclosure Requirements:

- The apparatus must be mounted within an enclosure or assembly to prevent personal injury resulting from accessibility to live parts. The enclosure is typically user-supplied and, therefore, was not examined as part of this Approval but shall comply with the requirements of this section.
- Accessibility - The system must be installed within the enclosure so that its circuits are accessible by the use of a tool only. A part is accessible when either a.) the IEC articulate accessibility probe applied in every possible position to the exterior or exposed surfaces, including the bottom; or b.) the IEC rigid accessibility probe applied with a maximum force of 30 Newtons (6.75 lbs force) in every possible position to the exterior or exposed surface, including the bottom, touches the part.
- Protection from Fire - If the enclosure is non-metallic, it shall have the proper flammability rating.
- Grounding - A metallic enclosure must have a protective grounding terminal and be marked as such. All accessible non-current conductive parts must be bonded to the protective grounding terminal.
- General Construction - The equipment enclosure, or parts of the enclosure, required to be in place to comply with the requirements for protection from electric shock, personal injury, protection of internal parts and wiring and external cord and cable assembly strain relief shall comply with the following tests for mechanical strength:
    - Impact Tests - The equipment shall be held firmly against a rigid support and shall be subjected to sets of three blows with 6.6 Joules (4.9 pound force-inch) from a spring-operated impact hammer. The hammer shall be applied to any external part that when broken is likely to expose live parts. A window of an indicating device shall withstand an impact of 0.085 Newton-meter (0.753 pound force-inch) from a hollow steel impact sphere 50.8 mm (2 inches) in diameter and an approximate mass of 113.4 grams (4 ounces).
    - Pressure Tests - A force of 90 Newtons (20 pounds) shall be applied from a metal rod 12.7 mm (0.50 inch) in diameter, the end of which is rounded. The force shall be applied for one minute to any point on the overall enclosure except the bottom. The bottom shall sustain a force of 65 Newtons (15 pounds).
    - Tip Stability Test - Equipment having a weight of 11 kilograms (24 pounds) or more shall not tip over when placed at the center of an inclined plane that makes an angle of 10 degrees with the horizontal and then turned to the position (with all doors, drawers, and other openable and sliding parts in the least stable position) most likely to cause tip-over.
    - Sharp Edges - An accessible edge, projection, or corner of an enclosure, opening, frame, guard, handle, or the like shall be smooth and well rounded, and shall not cause a cut-type injury during normal use of the equipment.

■

16.0 APPENDIX A - DETERMINE I|O MODULE LOCATION

There are several guidelines that must be followed when selecting control and module carrier slots for the i|o modules (and associated field termination assemblies). These guidelines, together with Appendix B, will help ensure that:

- i|o modules are installed on compatible carriers and slots.
- The current demand on the control carrier power supply is not excessive.
- Any additional power supplies that are needed are correctly specified.
- Any additional hardware (e.g. power supply carrier, carrier extenders) that is needed is identified.

Read the two situations stated in bold below and decide which applies to the installation at hand. Then follow the recommendations in the subsequent paragraph(s). These procedures should be performed for each 353R system.

1. Initial System Installation

1) Review the Select a Carrier and Slot section and temporarily assign each module a location.
2) Go to Appendix B - Determine Current Demand and enter the requested data for each carrier.
3) Sum the individual carrier current demands in the System Current Consumption table. Compare the system current demands to the power supply specifications and read the recommendation provided.
4) Save the completed tables for future reference when troubleshooting or adding modules.

2. Adding Modules to an Existing System

1) Obtain the previously completed current consumption tables.
2) Review the Select a Carrier and Slot section and temporarily assign a location to each module to be added.
3) Go to Appendix B - Determine Current Demand and enter the requested data for each carrier.
4) Sum the individual carrier current demands in the System Current Consumption table. Compare the system current demands to the power supply specifications and read the recommendation provided.

SELECT A CARRIER AND SLOT

To locate or relocate an i|o module (and its field termination assembly), refer to the location guidelines below and assign a temporary location. Once a temporary location is identified, go to Appendix B - Determine Current Demand to be sure that the power supply's current output specifications are not exceeded.

i|o modules can be inserted in a maximum of 31 contiguous carrier slots, for example, on one control carrier and four 8-module carriers. An empty slot between modules is permitted and may be necessary due to the required module types and bussed field power, however, an empty slot must be included in the 31 contiguous slots. Paying close attention to the information in the table below can help to minimize the number of carriers needed.

MODULE TYPE	USE ON CONTROL CARRIER	USE ON MODULE CARRIER	LOCATION NOTES
-- Modules Using 12 Vdc Only --			
iO-4TC	yes	yes	May be installed in any slot since the module does not connect to bussed field power.
iO-4RT	yes	yes	
-- Modules Using 12 Vdc and 24 Vdc Bussed Field Power[1, 2] --			
iO-8AI-2	yes	yes	
iO-8AI-V	yes	yes	
iO-8AI-2H	yes	yes	
iO-8AO	yes	yes	
iO-8AO-H	yes	yes	
iO-8DI24DMN	yes	yes	
iO-16DI24DMN	yes	yes	
-- Modules Using 12 Vdc and 24 Vdc Field Power for Isolated Inputs[3] --			
iO-8DI24DSI	yes	yes	May be installed in any slot since the module does not connect to bussed field power (e.g. iO-8DI24DSI and iO-8DIO60DMH can be in paired slots).
iO-16DI24DSI	yes	yes	
-- Modules Using 12 Vdc and Other Bussed Field Power Voltages[1, 2] --			
iO-8DI115AMN	no	yes	The other module in a paired slot must either be the same type (e.g. 2, iO-8DI230AMNs) or not connect to bussed field power (e.g. iO-4TC).
iO-8DI230AMN	no	yes	
iO-8DO60DMN	no	yes	
iO-8DO250AMN	no	yes	
-- Modules Using 12 Vdc and Field Power for Isolated Inputs or Outputs[3] --			
iO-8DI115ASI	yes	yes	May be installed in any slot since the module does not connect to bussed field power (e.g. iO-8DI230AMN and iO-8DIO60DEI can be in paired slots).
iO-8DI230ASI	yes	yes	
iO-8DO60DEI	yes	yes	
iO-8DO250AEI	yes	yes	

Notes:

1. The module carrier's paired slots for bussed field power are listed here and shown in Figure 17-1.
   Slots 1 and 2 on 4/8-module carriers
   Slots 3 and 4 on 4/8-module carriers
   Slots 5 and 6 on an 8-module carrier
   Slots 7 and 8 on an 8-module carrier
2. i|o modules that are mounted on a module carrier and use bussed field power will need power from external power supplies connected to the bussed field power connectors on each module carrier. Refer to the section (in Section 9 Module Wiring and Specifications) for each involved module for bussed field power specifications. Refer to Section 8.2 Model iO-(4/8)MC for wiring information.
3. i|o modules with isolated inputs or outputs require an external power source. Refer to the section for each involved module for field power voltage.

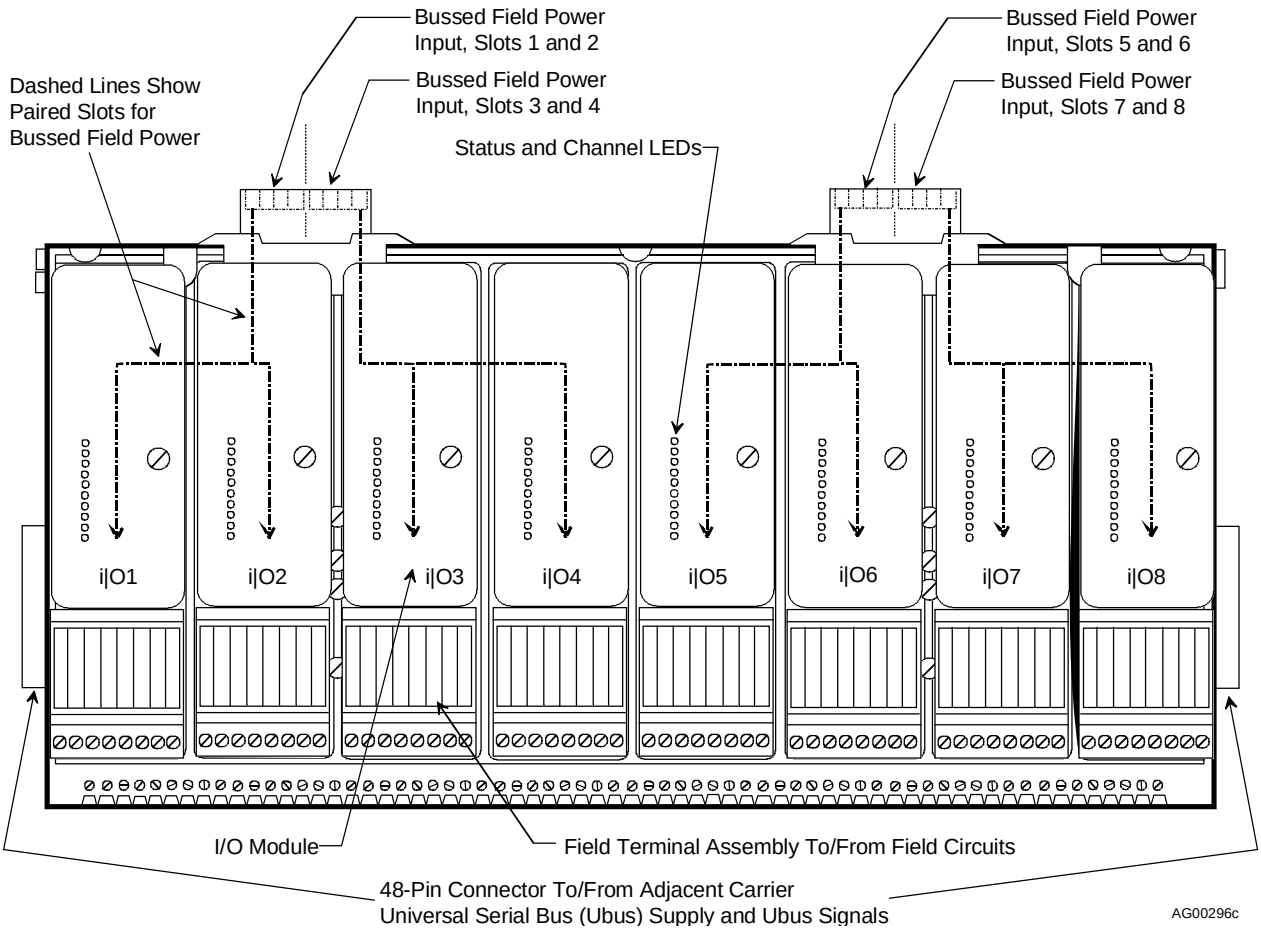

FIGURE 16-1 Bussed Field Power to an 8-Module Carrier

■

17.0 APPENDIX B - DETERMINE CURRENT DEMAND

A 353R power supply has 5, 12, and 24 Vdc outputs to power the 353R controller, controller I/O, i|o modules, and low current, 24 Vdc field devices, such as transmitters and relays. Up to 4 power supply modules can be used in power sharing and redundancy modes. One power supply is mounted on the control carrier and up to three can be mounted on the power supply carrier. A power share cable interconnects the two carriers.

This appendix provides a convenient means for you to determine the amount of current the controller, input/output circuits, and field devices will demand from the power supply module that is mounted on the control carrier. If the calculated current demand exceeds power supply module ratings, up to three additional power supplies can be easily added.

IMPORTANT

This appendix applies to Model 353RPSUAD_ power supply modules.

Other bussed field power sources (e.g. 115 Vac, 230 Vac, and DC voltages supplied from external power sources) are not considered in this appendix. Users should use methods similar to those described here to determine the current demand placed on each power source.

The tables on the following pages will assist you in determining the total system current demand. They will also, indicate the need for a power supply carrier and the number of power supply modules needed. Once sufficient power supply modules are added to supply the needed current, one or more additional power supply modules can be added for redundancy.

There are six tables. The first is for the control carrier and there is one table for each possible module carrier. The sixth table is used to sum carrier current demands to determine the system current demand and the number of power supply modules needed.

Up to four power supply modules can be installed. The modules will equally share the current load so that no single power supply is overburdened. If more power supplies are installed than are required by the following calculations, redundancy is added to the power supply system. Should one supply fail, operating current will be supplied by the remaining supplies.

Once completed, these tables should be saved. When adding i|o modules or configuring additional inputs and outputs in installed modules, recalculate the current consumption, update the saved tables, and add power supply modules as indicated by the calculation.

Now, go to the control carrier table on the next page and begin to enter the data for your 353R system.

17.1 CONTROL CARRIER CURRENT CONSUMPTION (CONT., I/O, AND UBUS ADDRESSES 1, 2 & 3)

For the controller:

1. Enter the controller model number in the box at right.
2. For the controller model, enter the "mA at 24 Vdc" value from the table below in the "mA at 24Vdc" box at right.

CONTROLLER MODEL	24 VDC
353RCM**N**_ _ _B_[11]	140 mA
353RCM**E**_ _ _B_	250 mA

For each of the three i|o modules:

3. Enter the module type in the box provided.
4. Locate the module type in the table on the next page. Enter the "mA @ 12 Vdc" value from the table in the module's "ma @ 12Vdc box.
5. Enter the "mA at 24 Vdc" value from the table on the next page in the module's "mA @ 24Vdc" box.
6. For field devices that are related to the modules on this carrier and are powered from 24 Vdc, add the currents of all devices and enter the total current load in mA. (Often these are devices powered from control carrier terminals 4, 7, 9, 33, 36, 39, 42, and 45, or from the power supply carrier's + 24 Vdc connector J9 (see Section 8.1 Model 353R-PSC).)

Add the currents as follows:

7. Total all the 12 Vdc currents and enter that number in the 12 Vdc box at the bottom of the page.
8. Total all the 24 Vdc currents and enter that number in the 24 Vdc box at the bottom of the page.
9. Go the first module carrier.

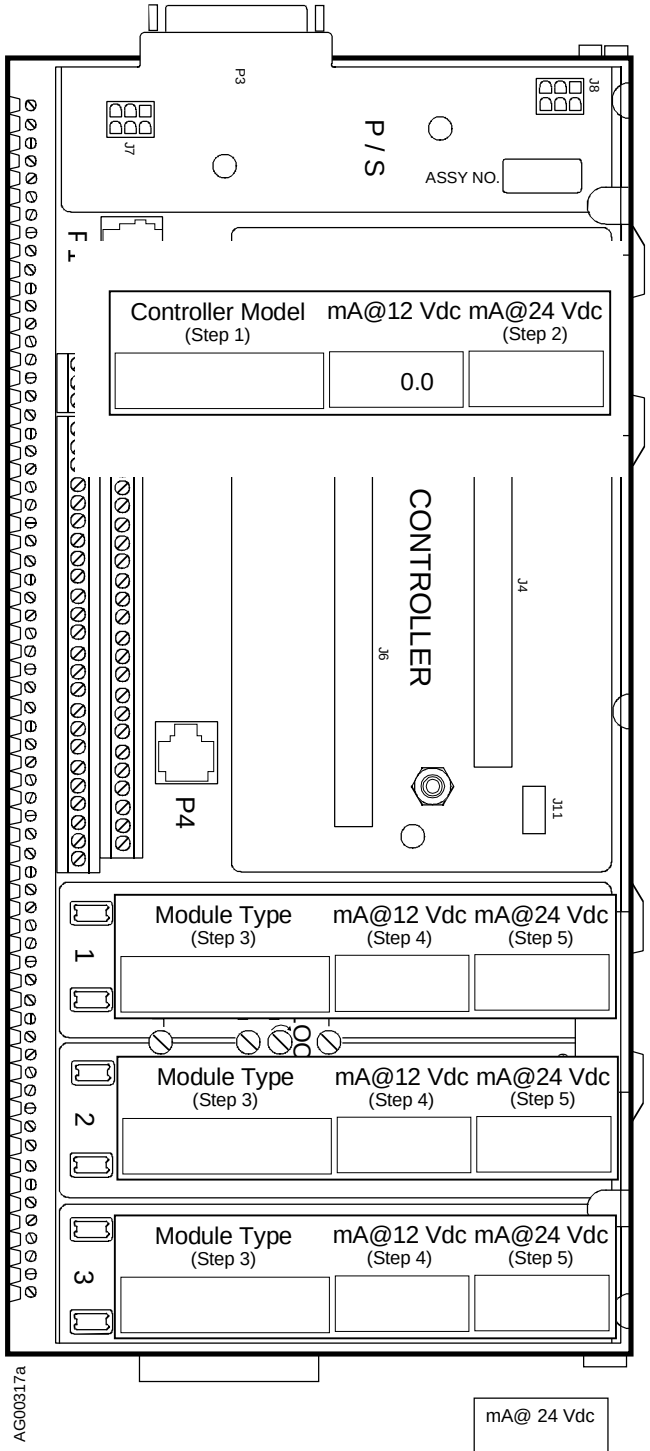

Field Devices Current Load (Step 6) — mA@ 24 Vdc

Total Current Loads for This Carrier (Steps 7 and 8) — mA@12 Vdc | mA@ 24 Vdc

[11] *Underscore is used as a placeholder. Character in model number position can be any letter.*

17.2 MODULE CARRIER 1 CURRENT CONSUMPTION (UBUS ADDRESSES 4-11)

Each module slot in the carrier drawing at right has three data entry boxes.

For each module on the carrier:

1. Enter the module type.
2. Enter the "mA @ 12Vdc" value from the table below.
3. Enter the "mA @ 24 Vdc" value from the table below.
4. For field devices that are related to the modules on this carrier and are powered from 24 Vdc, add the currents of all devices and enter the total current load (in mA).
5. Total all the 12 Vdc currents and enter that number in the 12 Vdc box at the bottom of the page.
6. Total all the 24 Vdc currents and enter that number in the 24 Vdc box at the bottom of the page.
7. Go to the next module carrier.

MODEL	mA @ 12 VDC	mA @ 24 VDC
iO-4TC	200	---
iO-4RT	200	---
iO-8AI-2	150	300
iO-8AI-V	150	60
iO-8AI-2H: 2-wire terminal 4-wire terminal	150	 300 60
iO-8AO	150	300
iO-8AO-H	150	300
iO-8DI24DMN	75	40
iO-8DI24DSI	75	---
iO-8DI115AMN	75	---
iO-8DI115ASI	75	---
iO-8DI230AMN	75	---
iO-8DI230ASI	75	---
iO-16DI24DMN	110	40
iO-16DI24DSI	75	---
iO-8DO60DMN	75	---
iO-8DO60DEI	75	See Note
iO-8DO250AMN	125	---
iO-8DO250AEI	125	---

Note:
Current demand depends on the external load and must be determined by the user. Enter current demand only if powered from a 353RPSUAD_ power supply module.

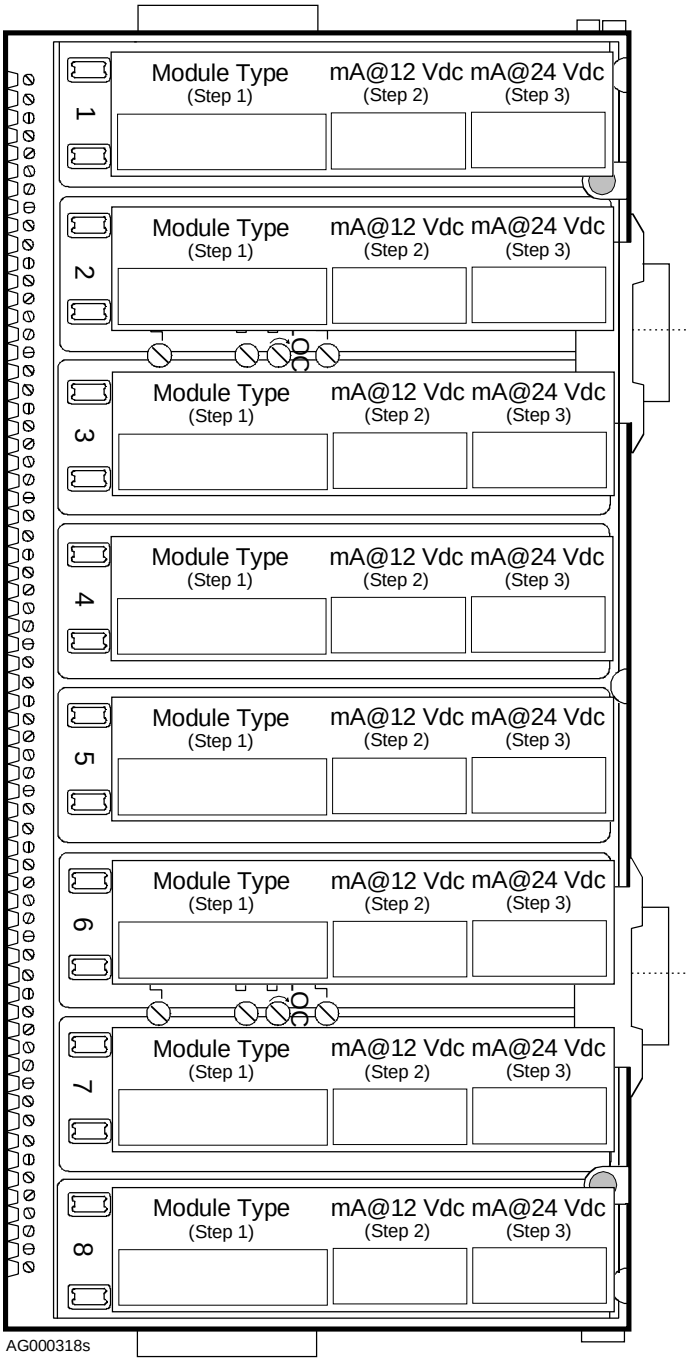

Field Device Current Load (Step 4) — mA@24 Vdc

Total Current Loads for This Carrier (Steps 5 and 6) — mA@12 Vdc | mA@24 Vdc

17.3 MODULE CARRIER 2 CURRENT CONSUMPTION (UBUS ADDRESSES 12-19)

Each module slot in the carrier drawing at right has three data entry boxes.

For each module on the carrier:

1. Enter the module type.
2. Enter the "mA @ 12Vdc" value from the table below.
3. Enter the "mA @ 24 Vdc" value from the table below.
4. For field devices that are related to the modules on this carrier and are powered from 24 Vdc, add the currents of all devices and enter the total current load (in mA).
5. Total all the 12 Vdc currents and enter that number in the 12 Vdc box at the bottom of the page.
6. Total all the 24 Vdc currents and enter that number in the 24 Vdc box at the bottom of the page.
7. Go to the next module carrier.

MODEL	mA @ 12 VDC	mA @ 24 VDC
iO-4TC	200	---
iO-4RT	200	---
iO-8AI-2	150	300
iO-8AI-V	150	60
iO-8AI-2H: 2-wire terminal 4-wire terminal	150	 300 60
iO-8AO	150	300
iO-8AO-H	150	300
iO-8DI24DMN	75	40
iO-8DI24DSI	75	---
iO-8DI115AMN	75	---
iO-8DI115ASI	75	---
iO-8DI230AMN	75	---
iO-8DI230ASI	75	---
iO-16DI24DMN	110	40
iO-16DI24DSI	75	---
iO-8DO60DMN	75	See Note
iO-8DO60DEI	75	---
iO-8DO250AMN	125	---
iO-8DO250AEI	125	---

Note:
Current demand depends on the external load and must be determined by the user. Enter current demand only if powered from a 353RPSUAD_ power supply module.

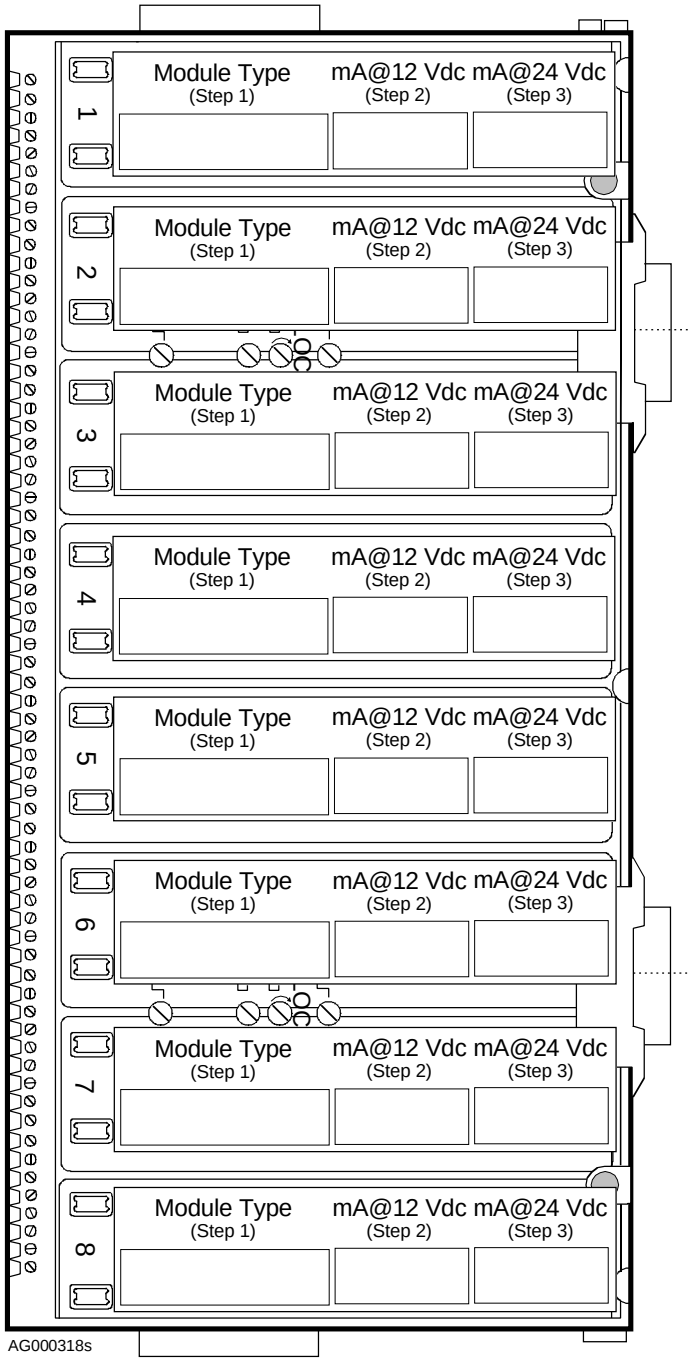

Field Device Current Load (Step 4) | mA@24 Vdc |

Total Current Loads for This Carrier (Steps 5 and 6) | mA@12 Vdc | mA@24 Vdc |

17.4 MODULE CARRIER 3 CURRENT CONSUMPTION (UBUS ADDRESSES 20-27)

Each module slot in the carrier drawing at right has three data entry boxes.

For each module on the carrier:

1. Enter the module type.
2. Enter the "mA @ 12Vdc" value from the table below.
3. Enter the "mA @ 24 Vdc" value from the table below.
4. For field devices that are related to the modules on this carrier and are powered from 24 Vdc, add the currents of all devices and enter the total current load (in mA).
5. Total all the 12 Vdc currents and enter that number in the 12 Vdc box at the bottom of the page.
6. Total all the 24 Vdc currents and enter that number in the 24 Vdc box at the bottom of the page.
7. Go to the next module carrier.

MODEL	mA @ 12 VDC	mA @ 24 VDC
iO-4TC	200	---
iO-4RT	200	---
iO-8AI-2	150	300
iO-8AI-V	150	60
iO-8AI-2H: 2-wire terminal 4-wire terminal	150	 300 60
iO-8AO	150	300
iO-8AO-H	150	300
iO-8DI24DMN	75	40
iO-8DI24DSI	75	---
iO-8DI115AMN	75	---
iO-8DI115ASI	75	---
iO-8DI230AMN	75	---
iO-8DI230ASI	75	---
iO-16DI24DMN	110	40
iO-16DI24DSI	75	---
iO-8DO60DMN	75	See Note
iO-8DO60DEI	75	---
iO-8DO250AMN	125	---
iO-8DO250AEI	125	---

Note:
Current demand depends on the external load and must be determined by the user. Enter current demand only if powered from a 353RPSUAD_ power supply module.

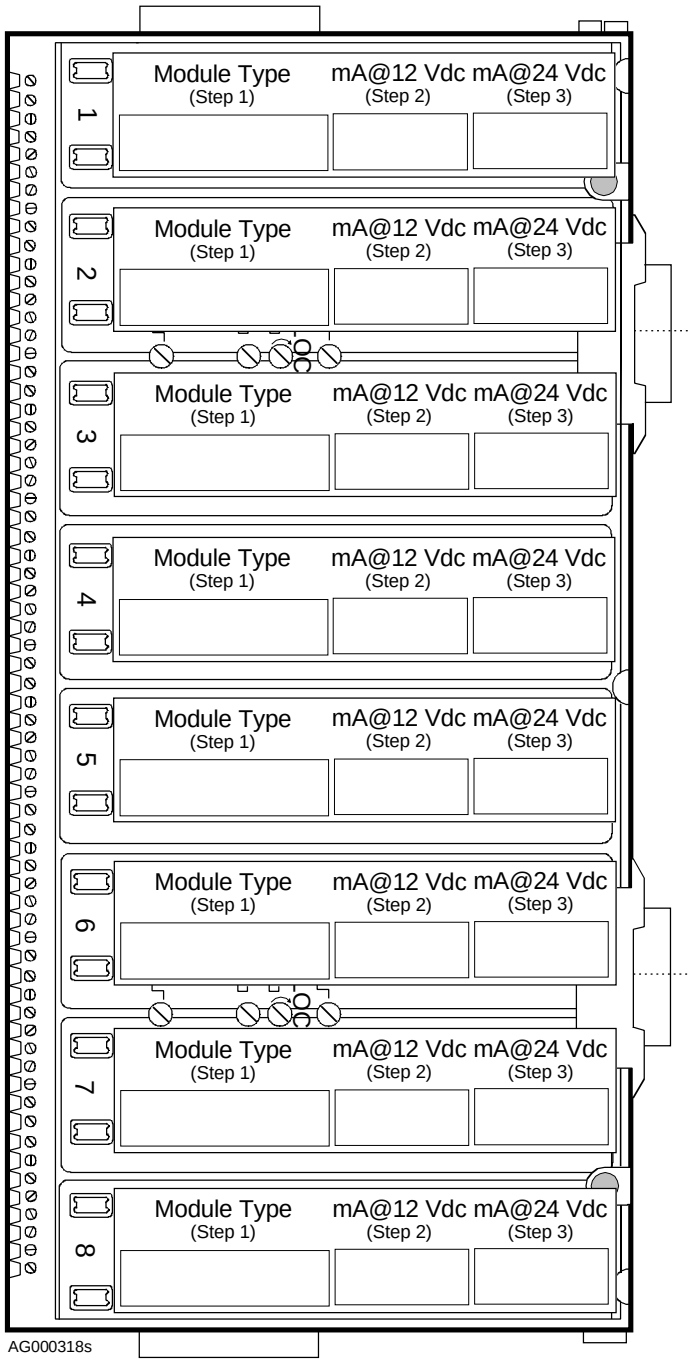

Field Device Current Load (Step 4) | mA@24 Vdc |

Total Current Loads for This Carrier (Steps 5 and 6) | mA@12 Vdc | mA@24 Vdc |

17.5 MODULE CARRIER 4 CURRENT CONSUMPTION (UBUS ADDRESSES 28-31)

Each module slot in the carrier drawing at right has three data entry boxes.

For the modules in slots 1, 2, 3 and 4 on the carrier:

1. Enter the module type.
2. Enter the "mA @ 12Vdc" value from the table below.
3. Enter the "mA @ 24 Vdc" value from the table below.
4. For field devices that are related to the modules on this carrier and are powered from 24 Vdc, add the currents of all devices and enter the total current load (in mA).
5. Total all the 12 Vdc currents and enter that number in the 12 Vdc box at the bottom of the page.
6. Total all the 24 Vdc currents and enter that number in the 24 Vdc box at the bottom of the page.
7. Go to the System Current Consumption table on the next page.

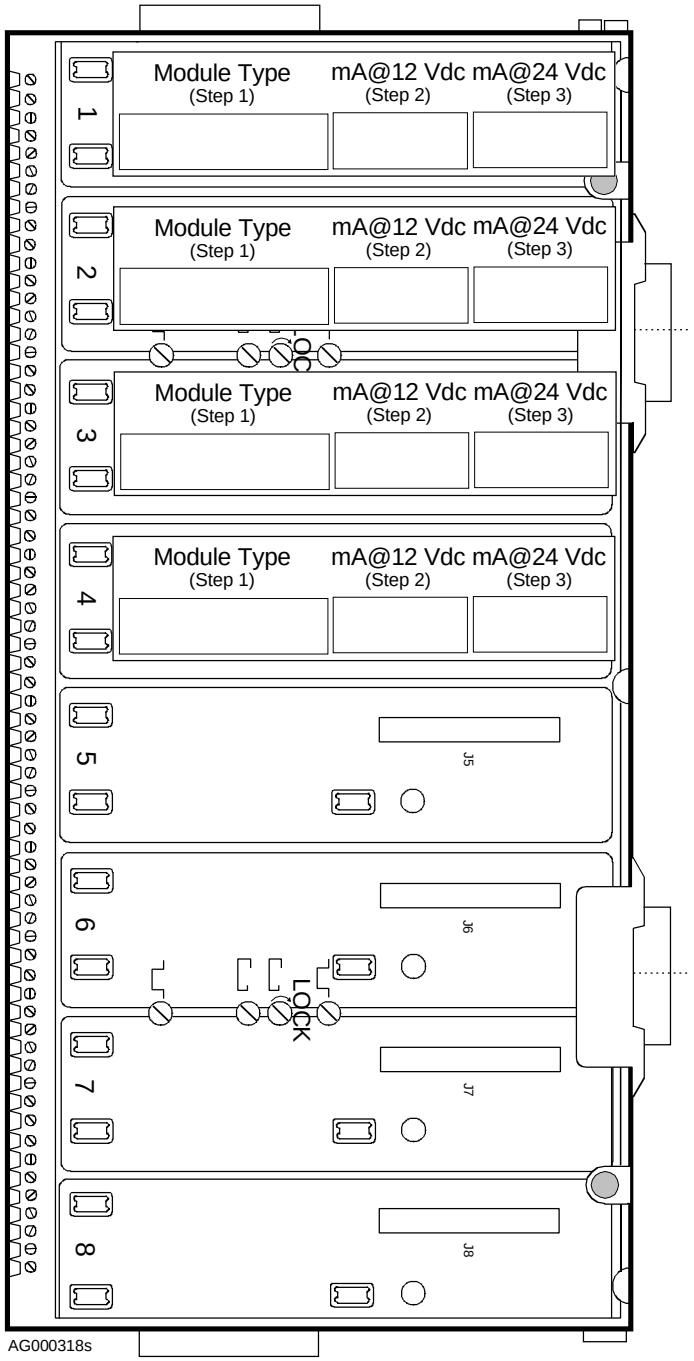

MODEL	mA @ 12 VDC	mA @ 24 VDC
iO-4TC	200	---
iO-4RT	200	---
iO-8AI-2	150	300
iO-8AI-V	150	60
iO-8AI-2H: 2-wire terminal 4-wire terminal	150	 300 60
iO-8AO	150	300
iO-8AO-H	150	300
iO-8DI24DMN	75	40
iO-8DI24DSI	75	---
iO-8DI115AMN	75	---
iO-8DI115ASI	75	---
iO-8DI230AMN	75	---
iO-8DI230ASI	75	---
iO-16DI24DMN	110	40
iO-16DI24DSI	75	---
iO-8DO60DMN	75	See Note
iO-8DO60DEI	75	---
iO-8DO250AMN	125	---
iO-8DO250AEI	125	---

Note:
Current demand depends on the external load and must be determined by the user. Enter current demand only if powered from a 353RPSUAD_ power supply module.

Field Device Current Load (Step 4)		mA@24 Vdc
Total Current Loads for This Carrier (Steps 5 and 6)	mA@12 Vdc	mA@24 Vdc

17.6 SYSTEM CURRENT CONSUMPTION

#	CARRIER	12 Vdc CURRENT LOADS	24 Vdc CURRENT LOADS
1	Control Carrier		
2	Module Carrier 1		
3	Module Carrier 2		
4	Module Carrier 3		
5	Module Carrier 4		
6	**Total Currents - Add lines 1-5**	mA	mA
7	**Power Supply Specification**	353RPSUAD_ = 2000 mA	353RPSUAD_ = 800 mA
8	**Calculation -** Divide the current on line 6 by that on line 7, round the result to the next higher whole number and enter the result.	mA	mA
9	**Quantity of Power Supply Modules Needed -** Select the highest number from the two numbers in the above row and refer to the recommendations stated below.	mA	mA

MAXIMUM NUMBER OF POWER SUPPLIES FROM ABOVE TABLE	RECOMMENDATION
1……	No additional power supplies are needed. The power supply module on the control carrier will supply all needed power except for bussed field power other than +24 Vdc. If redundancy is desired, install a Model 353R-PSC power supply carrier with one or more additional power supply modules. Refer to Section 8.4 Model 353R-PSC.
2, 3, 4……	Install a power supply carrier and as many power supply modules (4 maximum) as indicated to satisfy system power needs. If redundancy is desired and a location is free on the power supply carrier, install an additional power supply module. Refer to Section 8.4 Model 353R-PSC.
More than 4……..	Separate the current demands so that the 353R power supply modules furnish a portion of the current load and the accessory power supplies furnish the remainder. Refer to Appendix C for information about accessory power supplies and partitioning of current demand. Refer to Accessories, General in Table 15-1 Model Designations in Section 15 Model Designations and System Specifications for DIN-rail mountable power supplies and mounting clips.

■

18.0 APPENDIX C - ACCESSORY POWER SUPPLIES

This section describes use of accessory power supplies. Typically, an accessory power supply is included only when the system current consumption (see Appendix B) exceed the capabilities of the 353R power supply modules. Refer to Accessories, General in Table 15-1 Model Designations in Section 15 Model Designations and System Specifications for power supply part numbers.

Accessory power supplies can be used to supplement the current provided by up to 4 353R power supply modules. Use the recommendations in this appendix to wire 353R and accessory sources. An accessory supply output should never be wired in parallel with the output from the 353R power supplies. Improper current sharing can occur possibly resulting in power supply failure.

Terminal connections and mounting dimensions are provided with each accessory power supply. The supply can be DIN-rail mounted or mounted on a flat surface. Power wiring should be 12-14 AWG (2.5mm^2).

WARNING



Electrical shock hazard
Explosion hazard

Can cause death or injury

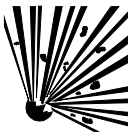

- Remove power from all wires and terminals before working on equipment.
- In potentially hazardous atmosphere, remove power from equipment before connecting or disconnecting power, signal, or other circuit.
- Observe pertinent regulations regarding installation in hazardous area.

18.1 POWER SUPPLY, 12 VDC

The 353R power supply modules and the accessory power supply must feed separate 12 Vdc buses. As shown in Figure 19-1, the 12 Vdc bus is opened by installing carrier extenders and a carrier extension cable between the control carrier and a module carrier or between two module carriers.

The accessory power supply is connected to the left-hand carrier extender. The carrier extenders and the carrier extension cable carry the Ubus between the separated carriers, however, the 12 Vdc bus is broken. Terminals on the left-hand carrier extender are provided for connection of the 12 Vdc power supply. Refer to Section 8.3 Model iO-(R/L)CE, Section 8.4 Model 353R-PSC, and Section 9.2 Model 353RPSUAD_ as necessary. The 12 Vdc bus to the left of the carrier extenders is powered by the 353R power supply.

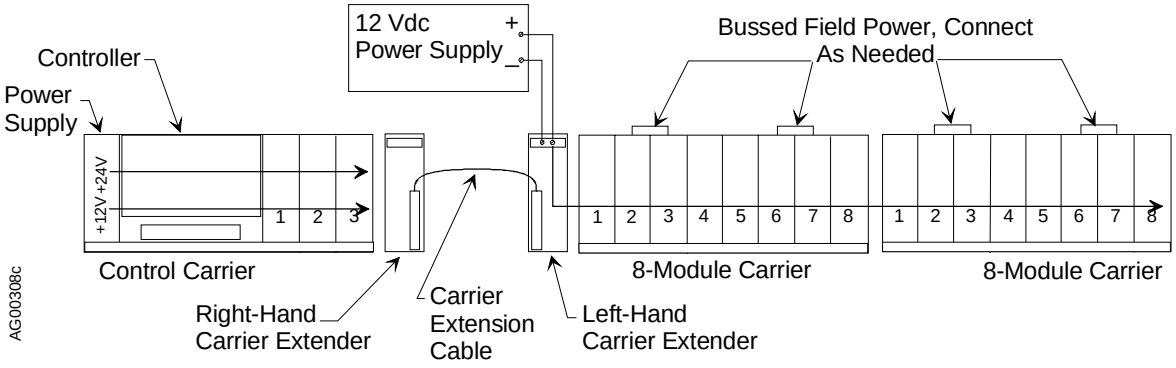

FIGURE 18-1 12 Vdc Accessory Power Supply

1. Determine which carriers are to be separated (i.e. where the 12 Vdc bus is to be opened). For example, review the System Current Consumption table in Appendix B to determine the best place to open the 12 Vdc Ubus to distribute the current load between the 353R power supplies and the accessory 12 Vdc power supply.
2. Install right-hand and left-hand carrier extenders between the carriers to continue the Ubus while opening the 12 Vdc bus.
3. Install a carrier extension cable to continue Ubus.
4. Refer to power supply manufacturer's literature and Figure 19-2 and connect the accessory 12 Vdc power supply to the HVCC+ and HVCC- terminals on the left-hand carrier extender to power the i|o modules on the module carrier(s) to the right of the carrier extender. Strip wire ends 1/4" (6mm).
5. At the left-hand carrier extender, install a jumper between terminal 1 Signal Ground and terminal 6 HVCC- as shown below.
6. Connect a 12-14 AWG (2.5 mm^2) wire between the left and right-hand "signal ground" terminals as shown.

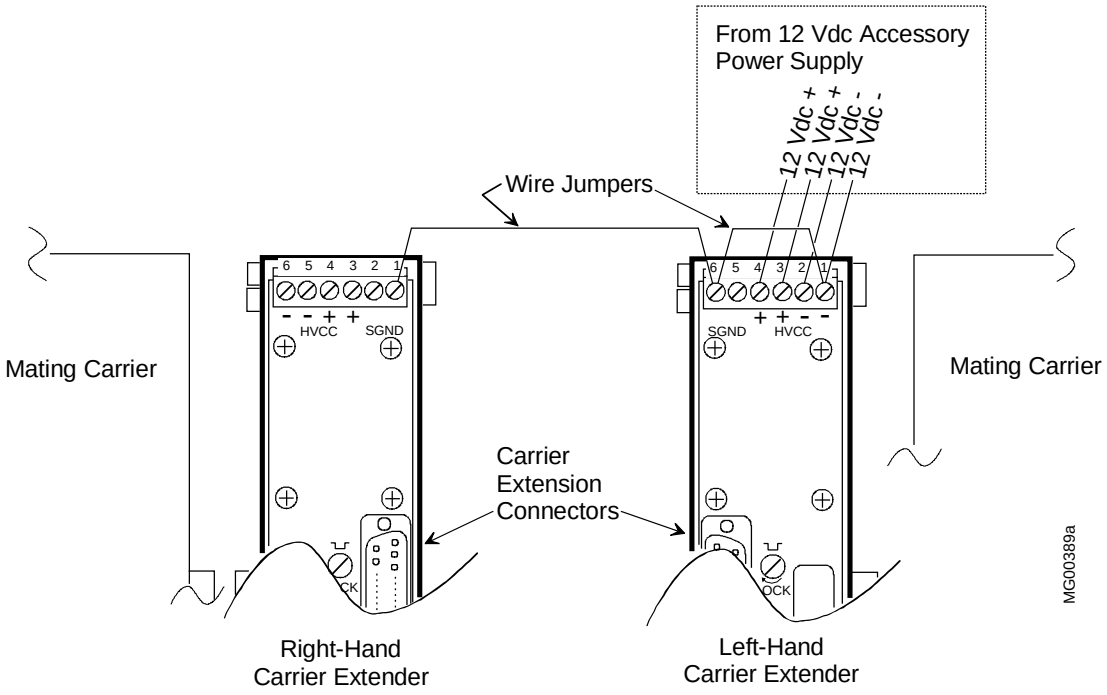

FIGURE 18-2 Wiring, 12 Vdc Accessory Power Supply

18.2 POWER SUPPLY, 24 VDC

As shown in Figure 19-3 below, accessory 24 Vdc power supply can provide bussed field power or furnish power to higher current field devices.

The 24 Vdc bus on the control carrier terminates on the control carrier and is not continued on a connected module carrier. Connect an accessory 24 Vdc power supply to the bussed field power connector on a module carrier to power the modules in a pair of carrier slots. Refer to Section 8.2 Model 353R-(4/8)MC for information concerning bussed field power connections to, and power distribution on, a module carrier. Power wiring should be 12-14 AWG (2.5 mm^2).

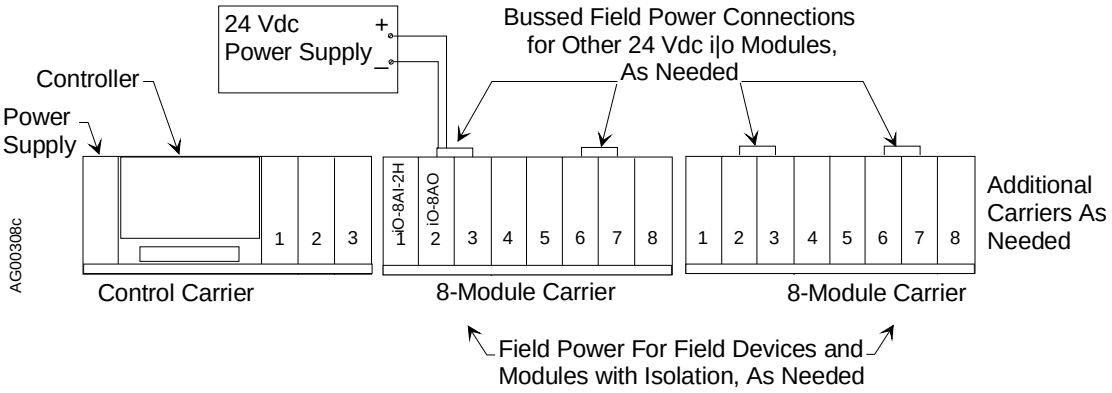

FIGURE 18-3 Accessory 24 Vdc Power Supply

■

19.0 APPENDIX D - RECORDING I|O MODULE LOCATION AND WIRING

Thirty-two tables are provided to simplify recording location and wiring information for the up to 31 modules that can be inserted in a single 353R system. One Control Carrier must be present and any combination of 4-Module and 8-Module Carriers can be used. Listed below are the typical entries with a brief explanation. Two sample tables are included. A page with blank tables is provided. Copy this page as often as needed.

- Module Type – enter the number of channels and the general type.
- Module Model – enter the module model number.
- Carrier No. and Slot No. – enter the carrier number and slot number where the module is to be installed. Carrier 1 is the Control Carrier, carrier 2 is the i|o carrier attached to the control carrier, and so on.
- Ubus Address – enter the Ubus address from Section 2 Getting Started.
- Chan. – i|o modules have from 4 to 16 channels depending upon type.
- Field Termination Terminals – for the module type that is to be installed, enter the terminal numbers, polarity, and other information as desired.
- Device Tag – enter the tagname of the field device to be connected to each channel.

Sample Tables

Module Type: 4-Chan. RTD Input					
Module Model: IO-4RT					
Carrier No. and Slot No.: 2-4					
Ubus Address: 7					
Chan.	Field Termination Terminals				Device Tag
1	1 NC	2 +	3	4 -	
2	5 NC	6 +	7	8 -	
3	9 NC	10 +	11	12 -	
4	13 NC	14 +	15	16 -	
5					
6					
7					
8					
9					
10					
11					
12					
13					
14					
15					
16					

Module Type: 16-Chan. Disc. Input					
Module Model: IO-16DI24DMN					
Carrier No. and Slot No.: 4-1*					
Ubus Address:12					
Chan.	Field Termination Terminals				Device Tag
1	1 +	2 -			
2	3 +	4 -			
3					
4					
5					
6					
7					
8	15 +	16 -			
9					
10					
11					
12					
13					
14					
15					
16	31 +	32 -			

*Assumes a Control Carrier and 3 4-Module Carriers.

Blank Tables - Copy this page as needed.

Module Type:					
Module Model:					
Carrier No. and Slot No.:					
Ubus Address:					
Chan.	Field Termination Terminals				Device Tag
1					
2					
3					
4					
5					
6					
7					
8					
9					
10					
11					
12					
13					
14					
15					
16					

Module Type:					
Module Model:					
Carrier No. and Slot No.:					
Ubus Address:					
Chan.	Field Termination Terminals				Device Tag
1					
2					
3					
4					
5					
6					
7					
8					
9					
10					
11					
12					
13					
14					
15					
16					

Module Type:					
Module Model:					
Carrier No. and Slot No.:					
Ubus Address:					
Chan.	Field Termination Terminals				Device Tag
1					
2					
3					
4					
5					
6					
7					
8					
9					
10					
11					
12					
13					
14					
15					
16					

Module Type:					
Module Model:					
Carrier No. and Slot No.:					
Ubus Address:					
Chan.	Field Termination Terminals				Device Tag
1					
2					
3					
4					
5					
6					
7					
8					
9					
10					
11					
12					
13					
14					
15					
16					

■

20.0 WARRANTY

(a) Seller warrants that on the date of shipment the goods are of the kind and quality described herein and are free of non-conformities in workmanship and material. This warranty does not apply to goods delivered by Seller but manufactured by others.

(b) Buyer's exclusive remedy for a nonconformity in any item of the goods shall be the repair or the replacement (at Seller's option) of the item and any affected part of the goods. Seller's obligation to repair or replace shall be in effect for a period of one (1) year from initial operation of the goods but not more than eighteen (18) months from Seller's shipment of the goods, provided Buyer has sent written notice within that period of time to Seller that the goods do not conform to the above warranty. Repaired and replacement parts shall be warranted for the remainder of the original period of notification set forth above, but in no event less than 12 months from repair or replacement. At its expense, Buyer shall remove and ship to Seller any such nonconforming items and shall reinstall the repaired or replaced parts. Buyer shall grant Seller access to the goods at all reasonable times in order for Seller to determine any nonconformity in the goods. Seller shall have the right of disposal of items replaced by it. If Seller is unable or unwilling to repair or replace, or if repair or replacement does not remedy the nonconformity, Seller and Buyer shall negotiate an equitable adjustment in the contract price, which may include a full refund of the contract price for the nonconforming goods.

(c) SELLER HEREBY DISCLAIMS ALL OTHER WARRANTIES, EXPRESS OR IMPLIED, EXCEPT THAT OF TITLE. SPECIFICALLY, IT DISCLAIMS THE IMPLIED WARRANTIES OF MERCHANTABILITY, FITNESS FOR A PARTICULAR PURPOSE, COURSE OF DEALING AND USAGE OF TRADE.

(d) Buyer and successors of Buyer are limited to the remedies specified in this article and shall have no others for a nonconformity in the goods. Buyer agrees that these remedies provide Buyer and its successors with a minimum adequate remedy and are their exclusive remedies, whether Buyer's or its successors' remedies are based on contract, warranty, tort (including negligence), strict liability, indemnity, or any other legal theory, and whether arising out of warranties, representations, instructions, installations, or non-conformities from any cause.

(e) Note: This article 1 does not apply to any software which may be furnished by Seller. In such cases, the attached Software License Addendum applies.

See the Customer/Product Support section of this manual for warranty and non-warranty service.

■

Siemens Industry, Inc.	Software Release Memo

SR353R-1
Rev 3
May 2010

Procidia™ Model 353R Control Module
MPU Controller Board Firmware, Version 3.00

PRODUCTS INVOLVED

Model TGX:353RCM _ _ _ _ B_[1] Control Module with MPU Controller Board V3.00 firmware

INTRODUCTION

This Software Release memo lists the operational considerations for version 3.00 MPU Controller board firmware (software).

OPERATIONAL CONSIDERATIONS

- RTC/CB Option Board - After downloading a configuration to a controller that has an RTC/CB board installed, an “RTC->MEM” message may appear following a power interruption. If the "RTC->MEM" message appears, the controller is asking for permission to transfer the configuration data from the RTC/CB to the MPU board. The presently selected choice (YES or NO) is shown in the 5-digit display. Select "NO" using the pulser knob and press the "STORE" button, which will allow the controller to operate. To stop the "RTC-MEM" message from appearing on future power cycles, you should now store a configuration parameter using the controller’s Display Assembly/Local Faceplate.
- ALARM - Alarm Block – When an ALARM block is placed in a loop configuration (either at the controller faceplate or in i|config™), Alarm 3 is configured as a Deviation alarm. The displayed default value of Alarm 3 Limit is 100%. However, the alarm will actually trip at 110%. To reset the default Limit value to 100%, display the Alarm 3 Limit value and press STORE (faceplate) or click Accept (i|config).

  When Alarm 3 Limit is user configured, the user entered value over writes the default value and the default trip point error has no effect.

  The above also occurs when creating a new configuration from a Factory Configured Option (FCO) that contains an ALARM - Alarm Block, for example, FCO101. If the selected FCO has two loops, the Alarm Block in each loop should be reset.

[1] The design level is indicated by the next to last character in the model number. The characters shown are those required to identify an involved instrument. See the Siemens Process Instruments catalog or the instrument’s User’s Manual (e.g. UM353R-1) for complete model designation information.

CUSTOMER/PRODUCT SUPPORT

For support and the location of your local Siemens representative, refer to the table below for the URL of the Process Instrumentation (PI) portion of the Siemens public Internet site. Once at the site, click **Support** in the right column and then **Product Support**. Next select the type of support desired: sales, technical (see the table below), documentation, or software.

Online Support Request	http://www.siemens.com/automation/support-request
Technical Support	1-800-333-7421; 8 a.m. to 4:45 p.m. eastern time, Monday through Friday (except holidays)
Customer Service & Returns	1-800-365-8766 (warranty and non-warranty)
Public Internet Site	http://www.usa.siemens.com/pi
Technical Publications in PDF	Click the above link to go to the PI home page. Click **Support** and then **Manuals** and then, under "Additional Manuals," select the product line (e.g. Control Solutions)

Procidia and i|config are trademarks of Siemens Industry, Inc. All product designations may be trademarks or product names of Siemens Industry, Inc. or other supplier companies whose use by third parties for their own purposes could violate the rights of the owners.

Siemens Industry, Inc assumes no liability for errors or omissions in this document or for the application and use of information included in this document. The information herein is subject to change without notice.

Procedures in this document have been reviewed for compliance with applicable approval agency requirements and are considered sound practice. Neither Siemens Industry, Inc. nor these agencies are responsible for product uses not included in the approval certification(s) or for repairs or modifications made by the user.

© Copyright 2010 Siemens Industry, Inc. All rights reserved.

Siemens Industry, Inc.	Software Release Memo

SR353R-2
Rev 1
May 2010

Model 353RCM Control Module
Ethernet Board Firmware, Version 2.01

PRODUCTS INVOLVED

All Model 353R Remote Mount Process Automation Controllers with an Ethernet option board; involved Control Module models are listed below:

TGX:353RCMNENNB_
TGX:353RCMNERNB_
TGX:353RCMEENNB_
TGX:353RCMEERNB_

INTRODUCTION

This Software Release memo provides the enhancements and operational considerations for Ethernet option board firmware version 2.01. This firmware is intended for a Model 353R Process Automation Controller that includes the Ethernet option board. Version 2.01 can upgrade all previous versions of Ethernet option board firmware.

Ethernet firmware is installed using the Controller Firmware Upgrade Utility, version 4.00, available for download from http://www.usa.siemens.com/353firmware. The download includes the Upgrade Utility, SR15939-71-4, and Ethernet firmware. *For more information about the utility and firmware installation steps, refer to Software Release memo SR15939-71-4.*

Optionally, a CD-ROM with the Upgrade Utility, SR15939-71-4, and Ethernet firmware can be ordered; order part number 15939-71V400.

ENHANCEMENTS

Version 2.01 of Ethernet firmware provides the following enhancements.

1. Controller security has been improved by closing a potential communications access point to unauthorized personnel. An undocumented integral Web page that is not needed for communications has been removed.
2. A firmware change has been incorporated to prevent a rare interruption in communications that could occur while a controller was communicating with another controller.

OPERATIONAL CONSIDERATIONS

None

UPGRADE HARDWARE AND FIRMWARE INSTALLATION

Refer to SR15939-71-4 for a brief list of needed hardware and the firmware installation steps.

CUSTOMER/PRODUCT SUPPORT

For support and the location of your local Siemens representative, refer to the table below for the URL of the Process Instrumentation (PI) portion of the Siemens public Internet site. Once at the site, click **Support** in the right column and then **Product Support**. Next select the type of support desired: sales, technical (see the table below), documentation, or software.

Online Support Request	http://www.siemens.com/automation/support-request
Technical Support	1-800-333-7421; 8 a.m. to 4:45 p.m. eastern time, Monday through Friday (except holidays)
Customer Service & Returns	1-800-365-8766 (warranty and non-warranty)
Public Internet Site	http://www.usa.siemens.com/pi
Technical Publications in PDF	Click the above link to go to the PI home page. Click **Support** and then **Manuals** and then, under "Additional Manuals," select the product line (e.g. Control Solutions)

All product designations may be trademarks or product names of Siemens Industry, Inc. or other supplier companies whose use by third parties for their own purposes could violate the rights of the owners.

Siemens Industry, Inc assumes no liability for errors or omissions in this document or for the application and use of information included in this document. The information herein is subject to change without notice.

Procedures in this document have been reviewed for compliance with applicable approval agency requirements and are considered sound practice. Neither Siemens Industry, Inc. nor these agencies are responsible for product uses not included in the approval certification(s) or for repairs or modifications made by the user.

© Copyright 2009, Siemens Industry, Inc. All rights reserved.