SINAMICS S110

Function Manual · 01/2011

SINAMICS

SIEMENS

SIEMENS

SINAMICS

S110
Function Manual

Function Manual

Preface

General information for commissioning 1

Commissioning preparations for PROFIBUS 2

Commissioning with PROFIBUS 3

Commissioning with CANopen 4

Diagnostics 5

Parameterization using the Basic Operator Panel 20 6

Drive functions 7

Safety Integrated Functions 8

Communication 9

Basic information about the drive system 10

Appendix 11

Valid for: Firmware version 4.4

01/2011

6SL3097-4AB10-0BP3

Legal information

Warning notice system

This manual contains notices you have to observe in order to ensure your personal safety, as well as to prevent damage to property. The notices referring to your personal safety are highlighted in the manual by a safety alert symbol, notices referring only to property damage have no safety alert symbol. These notices shown below are graded according to the degree of danger.

⚠DANGER
indicates that death or severe personal injury **will** result if proper precautions are not taken.

⚠WARNING
indicates that death or severe personal injury **may** result if proper precautions are not taken.

⚠CAUTION
with a safety alert symbol, indicates that minor personal injury can result if proper precautions are not taken.

CAUTION
without a safety alert symbol, indicates that property damage can result if proper precautions are not taken.

NOTICE
indicates that an unintended result or situation can occur if the corresponding information is not taken into account.

If more than one degree of danger is present, the warning notice representing the highest degree of danger will be used. A notice warning of injury to persons with a safety alert symbol may also include a warning relating to property damage.

Qualified Personnel

The product/system described in this documentation may be operated only by **personnel qualified** for the specific task in accordance with the relevant documentation for the specific task, in particular its warning notices and safety instructions. Qualified personnel are those who, based on their training and experience, are capable of identifying risks and avoiding potential hazards when working with these products/systems.

Proper use of Siemens products

Note the following:

⚠WARNING
Siemens products may only be used for the applications described in the catalog and in the relevant technical documentation. If products and components from other manufacturers are used, these must be recommended or approved by Siemens. Proper transport, storage, installation, assembly, commissioning, operation and maintenance are required to ensure that the products operate safely and without any problems. The permissible ambient conditions must be adhered to. The information in the relevant documentation must be observed.

Trademarks

All names identified by ® are registered trademarks of the Siemens AG. The remaining trademarks in this publication may be trademarks whose use by third parties for their own purposes could violate the rights of the owner.

Disclaimer of Liability

We have reviewed the contents of this publication to ensure consistency with the hardware and software described. Since variance cannot be precluded entirely, we cannot guarantee full consistency. However, the information in this publication is reviewed regularly and any necessary corrections are included in subsequent editions.

Siemens AG
Industry Sector
Postfach 48 48
90026 NÜRNBERG
GERMANY

order number: 6SL3097-4AB10-0BP3
℗ 12/2010

Copyright © Siemens AG 2008, 2009, 2010, 2011.
Technical data subject to change

Preface

SINAMICS Documentation

The SINAMICS documentation is organized in the following categories:

- General documentation / catalogs
- User documentation
- Manufacturer/Service documentation

More information

Using the following link, you can find information on the topics:

- Ordering documentation/overview of documentation
- Additional links to download documents
- Using documentation online (find and search in manuals/information)

http://www.siemens.com/motioncontrol/docu

Please send any questions about the technical documentation (e.g. suggestions for improvement, corrections) to the following e-mail address:
docu.motioncontrol@siemens.com

My Documentation Manager

Using the following link, you can find information on how to create your own individual documentation based on Siemens' content, and adapt it for your own machine documentation:

http://www.siemens.com/mdm

Training

Using the following link, you can find information on SITRAIN - training from Siemens for products, systems and automation engineering solutions:

http://www.siemens.com/sitrain

FAQs

You can find Frequently Asked Questions in the Service&Support pages under **Product Support:**

http://support.automation.siemens.com

SINAMICS

You can find information on SINAMICS at:

http://www.siemens.com/sinamics.

Usage phases and the available tools/documents

Table 1 Usage phase and the available tools / documents

Usage phase	Tools/documents
Orientation	SINAMICS S Sales Documentation
Planning/configuration	SIZER configuration tool Configuration Manuals, Motors
Decision making / ordering	SINAMICS S Catalogs
Installation / assembly	• SINAMICS S110 Equipment Manual
Commissioning	• STARTER commissioning tool • SINAMICS S110 Getting Started • SINAMICS S110 Function Manual Drive Functions • SINAMICS S110 List Manual
Usage / operation	• SINAMICS S110 Function Manual Drive Functions • SINAMICS S110 List Manual
Maintenance / service	• SINAMICS S110 Function Manual Drive Functions • SINAMICS S110 List Manual • SINAMICS S110 Equipment Manual

Target group

This documentation is aimed at machine manufacturers, commissioning engineers, and service personnel who use SINAMICS.

Benefits

This manual describes all the information, procedures and operational instructions required for commissioning and servicing SINAMICS S110.

Standard scope

The scope of the functionality described in this document can differ from the scope of the functionality of the drive system that is actually supplied.

- Other functions not described in this documentation might be able to be executed in the drive system. This does not, however, represent an obligation to supply such functions with a new control or when servicing.
- Functions can be described in the documentation that are not available in a particular product version of the drive system. The functionality of the supplied drive system should only be taken from the ordering documentation.
- Extensions or changes made by the machine manufacturer must be documented by the machine manufacturer.

For reasons of clarity, this documentation does not contain all of the detailed information on all of the product types. This documentation cannot take into consideration every conceivable type of installation, operation and service/maintenance.

Technical Support

Country-specific telephone numbers for technical support are provided in the Internet under **Contact**:

http://www.siemens.com/automation/service&support

EC Declaration of Conformity

The EC Declaration of Conformity for the EMC Directive can be found on the Internet at:

http://support.automation.siemens.com

There – as a search term – enter the number **15257461** or contact your local Siemens office.

The EC Declaration of Conformity for the Low Voltage Directive can be found on the Internet at:

http://support.automation.siemens.com

There – as a search term – enter the number **22383669** .

Note

When operated in dry areas, SINAMICS S devices conform to the Low Voltage Directive 73/23/EEC or 2006/95/EEC.

Note

SINAMICS S devices fulfill EMC Directive 89/336/EEC or 2004/108/EEC in the configuration specified in the associated EC Declaration of Conformity for EMC and when the EMC installation guideline is implemented, Order No. 6FC5297-0AD30-0□P□.

Note

The Equipment Manual describes a desired state which, if maintained, ensures the required level of operational reliability and compliance with EMC limit values.

Should there be any deviation from the requirements in the Equipment Manual, appropriate actions (e.g. measurements) must be taken to check/prove that the required level of operational reliability and compliance with EMC limit values are ensured.

Spare parts

You can find spare parts on the Internet at:
http://support.automation.siemens.com/WW/view/de/16612315

Test certificates

The Safety Integrated functions of SINAMICS components are generally certified by independent institutes. An up-to-date list of certified components is available on request from your local Siemens office. If you have any questions relating to certifications that have not been completed, please ask your Siemens contact.

ESD information

⚠ CAUTION

Electrostatic sensitive devices (ESD) are single components, integrated circuits or devices that can be damaged by electrostatic fields or electrostatic discharges.

Regulations for handling ESD components:

When handling components, make sure that personnel, workplaces, and packaging are well grounded.

Personnel may only come into contact with electronic components, if

- They are grounded with an ESD wrist band, or
- They are in ESD areas with conductive flooring, ESD shoes or ESD grounding straps.

Electronic boards should only be touched if absolutely necessary. They must only be handled on the front panel or, in the case of printed circuit boards, at the edge.

Electronic boards must not come into contact with plastics or items of clothing containing synthetic fibers.

Boards must only be placed on conductive surfaces (work surfaces with ESD surface, conductive ESD foam, ESD packing bag, ESD transport container).

Electronic boards may not be placed near display units, monitors, or televisions (minimum distance from the screen > 10 cm).

Measurements must only be taken on boards when the measuring instrument is grounded (via protective conductors, for example) or the measuring probe is briefly discharged before measurements are taken with an isolated measuring device (for example, touching a bare metal housing).

⚠ DANGER

Electrical, magnetic and electromagnetic fields (EMF) that occur during operation can pose a danger to persons who are present in the direct vicinity of the product - especially persons with pacemakers, implants, or similar devices.

The relevant directives and standards must be observed by the machine/plant operators and people present in the vicinity of the product. These are, for example, EMF Directive 2004/40/EEC and standards EN 12198-1 to -3 in the European Economic Area (EEA) and, in Germany, the accident prevention regulation BGV 11 and the associated rule BGR 11 "Electromagnetic fields" from the German Employer's Liability Insurance Association.

These state that a hazard analysis must drawn up for every workplace, from which measures for reducing dangers and their impact on persons are derived and applied, and exposure and danger zones are defined and observed.

The relevant safety notes in each chapter must be observed.

General safety guidelines

⚠DANGER

Commissioning is absolutely prohibited until it has been completely ensured that the machine in which the components described here are to be installed is in full compliance with the provisions of the EC Machinery Directive.

Only appropriately qualified personnel may install, commission, and maintain SINAMICS S devices.

The personnel must take into account the information provided in the technical customer documentation for the product, and be familiar with and observe the specified danger and warning notices.

Operational electrical equipment and motors have parts and components which are at hazardous voltage levels, that if touched, can result in severe bodily injury or death.

All work on the electrical system must be carried out when the system has been disconnected from the power supply.

In combination with the drive system, the motors are generally approved for operation on TN and TT systems with grounded neutral and on IT systems.

In operation on IT systems, the occurrence of a first fault between an active part and ground must be signaled by a monitoring device. In accordance with IEC 60364-4-41 it is recommended that the first fault should be eliminated as quickly as practically possible.

In networks with a grounded external conductor, an isolating transformer with grounded neutral (secondary side) must be connected between the supply and the drive system to protect the motor insulation from excessive stress. The majority of TT systems have a grounded external conductor, so in this case an isolating transformer must be used.

⚠DANGER

Correct and safe operation of SINAMICS S drive units assumes correct transportation in the transportation packaging, correct long-term storage in the transport packaging, setup and installation, as well as careful operation and maintenance.

The details in the Catalogs and proposals also apply to the design of special equipment versions.

In addition to the danger and warning information provided in the technical customer documentation, the applicable national, local, and system-specific regulations and requirements must be taken into account.

According to EN 61800-5-1 and UL 508, only safely isolated protective extra low voltages may be connected to any of the connections or terminals on the electronics modules.

⚠DANGER

Using protection against direct contact via DVC A (PELV) is only permissible in areas with equipotential bonding and in dry rooms indoors. If these conditions are not met, other protective measures with regard to electric shock must be taken, e.g. touch protection.

⚠ DANGER

As part of routine tests, SINAMICS S components will undergo a voltage test in accordance with EN 61800-5-1. Before the voltage test is performed on the electrical equipment of machines acc. to EN 60204-1, Section 18.4, all connectors of SINAMICS S equipment must be disconnected/unplugged to prevent the equipment from being damaged.

Motors should be connected up in accordance with the circuit diagram supplied with the motor (refer to the connection examples for Power Modules). They must not be connected directly to the three-phase supply because this will damage them.

⚠ WARNING

Operating the equipment in the immediate vicinity (< 1.8 m) of cell phones with a transmitter power of > 1 W may cause the equipment to malfunction.

Explanation of symbols

The symbols are in accordance with IEC 617-2.

Table 2 Symbols

Symbol	Meaning
	Protective earth (PE)
	Ground (e.g. M 24 V)
	Functional ground Equipotential bonding

Table of contents

Preface **3**

1 General information for commissioning **21**

1.1 Explanations regarding the STARTER user interface 21

1.2 BICO interconnection procedure in STARTER 23

1.3 DRIVE-CLiQ interface for CU305 32

1.4 Notes on the commissioning of a 2-pole resolver as absolute encoder 32

1.5 Temperature sensors for SINAMICS components 33

2 Commissioning preparations for PROFIBUS **37**

2.1 Requirements for commissioning 37

2.2 PROFIBUS components 38

2.3 Connection via serial interface 40

2.4 Powering-up/powering-down the drive system 42

3 Commissioning with PROFIBUS **45**

3.1 Sequence of operations during commissioning 45
3.1.1 Safety guidelines 46

3.2 STARTER commissioning tool 46
3.2.1 Important STARTER functions 47
3.2.2 Activating online operation: STARTER via PROFIBUS 50

3.3 Basic Operator Panel 20 (BOP20) 51
3.3.1 Important functions via BOP20 52

3.4 Creating a project in STARTER 53
3.4.1 Creating a project offline 53
3.4.2 Searching for a drive unit online 55
3.4.3 Searching for nodes that can be accessed 57

3.5 Example of first commissioning with STARTER 58
3.5.1 Task 58
3.5.2 Commissioning with STARTER (example) 59

3.6 Initial commissioning using servo AC DRIVE with BOP20 as an example 60
3.6.1 Task 60
3.6.2 Component wiring (example) 61
3.6.3 Quick commissioning using the BOP (example) 62

4 Commissioning with CANopen **65**

4.1 Requirements for commissioning 65
4.1.1 Previous knowledge 65
4.1.2 Prerequisites for commissioning CU305 with CANopen 66
4.1.3 CAN bus on the CU305 67

4.1.4 CAN bus interface X126 ... 68
4.1.5 CANopen functionality CU305 CAN ... 69
4.1.6 Diagnostics LED "COM" ... 70

4.2 Commissioning ... 70
4.2.1 Procedure when commissioning the drive for the first time ... 70
4.2.2 CANopen object directory ... 71
4.2.3 Commissioning options ... 72
4.2.4 Configuring the drive unit with STARTER (overview) ... 72
4.2.5 Searching for the drive unit ONLINE ... 74
4.2.6 Configuring a drive unit ... 75
4.2.7 Monitoring ... 81
4.2.8 Loading the project to the drive unit ... 83

4.3 Configuring COB-IDs and process data objects ... 84
4.3.1 Configuring COB-IDs and process data ... 84

4.4 Interconnecting process data ... 84
4.4.1 Interconnecting process data ... 84

4.5 Loading and managing projects ONLINE ... 85
4.5.1 In ONLINE mode, load the projects from the drive unit to the PC/PG and save. ... 85

5 Diagnostics ... 87

5.1 Diagnostics via LEDs ... 87
5.1.1 LEDs when the Control Unit is booted ... 87
5.1.2 LEDs after the Control Unit CU305 has booted ... 89
5.1.3 Sensor Module Cabinet SMC10 / SMC20 ... 91
5.1.4 Meaning of LEDs on the Sensor Module Cabinet-Mounted SMC30 ... 92

5.2 Diagnostics via STARTER ... 93
5.2.1 Function generator ... 93
5.2.2 Trace function ... 97
5.2.3 Measuring function ... 98
5.2.4 Measuring sockets ... 101

5.3 Fault and alarm messages ... 105
5.3.1 General information about faults and alarms ... 105
5.3.2 Buffer for faults and alarms ... 107
5.3.3 Configuring messages ... 110
5.3.4 Parameters and function diagrams for faults and alarms ... 112
5.3.5 Forwarding of faults and alarms ... 113

6 Parameterization using the Basic Operator Panel 20 ... 115

6.1 General information about the BOP20 ... 115

6.2 Displays and using the BOP20 ... 117

6.3 Fault and alarm displays ... 121

6.4 Controlling the drive using the BOP20 ... 122

7 Drive functions ... 123

7.1 Servo control ... 123
7.1.1 Speed controller ... 123
7.1.2 Speed setpoint filter ... 124
7.1.3 Speed controller adaptation ... 125

7.1.4 Torque-controlled operation 127
7.1.5 Torque setpoint limitation 129
7.1.6 Current controller 134
7.1.7 Current setpoint filter 137
7.1.7.1 Integration 143
7.1.8 Note about the electronic motor model 143
7.1.9 V/f control for diagnostics 144
7.1.10 Optimizing the current and speed controller 147
7.1.11 Operation without an encoder 150
7.1.12 Motor data identification 154
7.1.12.1 Motor data identification - induction motor 157
7.1.12.2 Motor data identification - synchronous motor 159
7.1.13 Pole position identification 162
7.1.14 Vdc control 166
7.1.15 Travel to fixed stop 170
7.1.16 Vertical axes 175
7.1.17 Variable signaling function 176
7.1.18 Central probe evaluation 178
7.1.19 Pulse/direction interface 181
7.1.19.1 Commissioning the pulse/direction interface 182

7.2 Basic functions 187
7.2.1 Changing over units 187
7.2.2 Reference parameters/normalizations 189
7.2.3 Automatic restart 191
7.2.4 Armature short-circuit brake, DC brake 193
7.2.5 OFF3 torque limits 196
7.2.6 Simple brake control 197
7.2.7 Parking axis and parking encoder 200
7.2.8 Runtime (operating hours counter) 202
7.2.9 Changing the direction of rotation without changing the setpoint 203

7.3 Function modules 204
7.3.1 Function modules - Definition and commissioning 204
7.3.2 Technology controller 205
7.3.2.1 Features 205
7.3.2.2 Description 205
7.3.2.3 Integration 208
7.3.2.4 Commissioning with STARTER 209
7.3.3 Extended monitoring functions 210
7.3.3.1 Description 210
7.3.3.2 Commissioning 211
7.3.4 Extended brake control 212
7.3.4.1 Features 212
7.3.4.2 Integration 212
7.3.4.3 Description 214
7.3.4.4 Examples 214
7.3.4.5 Commissioning 216
7.3.5 Closed-loop position control 217
7.3.5.1 General features 217
7.3.5.2 Position actual value conditioning 217
7.3.5.3 Position controller 227
7.3.5.4 Monitoring functions 228

7.3.5.5 Measuring probe evaluation and reference mark search ... 231
7.3.5.6 Integration ... 232
7.3.6 Basic Positioner ... 233
7.3.6.1 Mechanical system ... 235
7.3.6.2 Limits ... 237
7.3.6.3 Referencing ... 241
7.3.6.4 Referencing with more than one zero mark per revolution ... 249
7.3.6.5 Traversing blocks ... 252
7.3.6.6 Travel to fixed stop ... 258
7.3.6.7 Direct setpoint input (MDI) ... 262
7.3.6.8 Jog ... 265
7.3.6.9 Status signals ... 266
7.3.7 Extended setpoint channel ... 269
7.3.7.1 Activation of the "extended setpoint channel" function module ... 269
7.3.7.2 Description ... 269
7.3.7.3 Jog ... 271
7.3.7.4 Fixed speed setpoints ... 275
7.3.7.5 Motorized potentiometer ... 276
7.3.7.6 Main/supplementary setpoint and setpoint modification ... 278
7.3.7.7 Direction limitation and setpoint inversion ... 280
7.3.7.8 Suppression bandwidths and setpoint limits ... 281
7.3.7.9 Ramp-function generator ... 283
7.3.8 Free function blocks ... 287
7.3.8.1 Overview ... 287
7.3.8.2 Commissioning ... 298
7.3.8.3 AND ... 302
7.3.8.4 OR ... 303
7.3.8.5 XOR (exclusive OR) ... 303
7.3.8.6 NOT (inverter) ... 303
7.3.8.7 ADD (adder) ... 304
7.3.8.8 SUB (subtracter) ... 304
7.3.8.9 MUL (multiplier) ... 304
7.3.8.10 DIV (divider) ... 305
7.3.8.11 AVA (absolute value generator with sign evaluation) ... 305
7.3.8.12 MFP (pulse generator) ... 306
7.3.8.13 PCL (pulse shortener) ... 306
7.3.8.14 PDE (ON delay) ... 307
7.3.8.15 PDF (OFF delay) ... 308
7.3.8.16 PST (pulse stretcher) ... 309
7.3.8.17 RSR (RS flip-flop, reset dominant) ... 309
7.3.8.18 DFR (D flip-flop, reset dominant) ... 310
7.3.8.19 BSW (binary change-over switch) ... 310
7.3.8.20 NSW (numeric change-over switch) ... 311
7.3.8.21 LIM (limiter) ... 311
7.3.8.22 PT1 (smoothing element) ... 312
7.3.8.23 INT (integrator) ... 313
7.3.8.24 DIF (derivative action element) ... 314
7.3.8.25 LVM (double-sided limit monitor with hysteresis) ... 315
8 Safety Integrated Functions ... 317
8.1 Standards and regulations ... 317
8.1.1 General information ... 317

8.1.1.1 Aims 317
8.1.1.2 Functional safety 318
8.1.2 Safety of machinery in Europe 318
8.1.2.1 Machinery Directive 319
8.1.2.2 Harmonized European Standards 319
8.1.2.3 Standards for implementing safety-related controllers 321
8.1.2.4 EN ISO 13849-1 (previously EN 954-1) 322
8.1.2.5 EN 62061 323
8.1.2.6 Series of standards EN 61508 (VDE 0803) 325
8.1.2.7 Risk analysis/assessment 326
8.1.2.8 Risk reduction 328
8.1.2.9 Residual risk 328
8.1.3 Machine safety in the USA 328
8.1.3.1 Minimum requirements of the OSHA 329
8.1.3.2 NRTL listing 329
8.1.3.3 NFPA 79 330
8.1.3.4 ANSI B11 330
8.1.4 Machine safety in Japan 331
8.1.5 Equipment regulations 331
8.1.6 Other safety-related issues 332
8.1.6.1 Information sheets issued by the Employer's Liability Insurance Association 332
8.1.6.2 Additional references 332

8.2 General information about SINAMICS Safety Integrated 333
8.2.1 Supported functions 333
8.2.2 Control of Safety Integrated functions 335
8.2.3 Drive monitoring with or without encoder 336
8.2.4 Parameter, Checksum, Version, Password 337

8.3 System features 340
8.3.1 Latest information 340
8.3.2 Certification 341
8.3.3 Safety instructions 342
8.3.4 Probability of failure for safety functions 345
8.3.5 Response times 345
8.3.6 Residual risk 350

8.4 Safety Integrated Basic Functions 352
8.4.1 Safe Torque Off (STO) 352
8.4.2 Safe Stop 1 (SS1, time controlled) 355
8.4.3 Safe Brake Control (SBC) 357
8.4.4 Safety faults 359
8.4.5 Forced dormant error detection 361

8.5 Safety Integrated Extended Functions 362
8.5.1 Safety functions "with encoder" / "without encoder" 362
8.5.2 Safe Torque Off 364
8.5.3 Safe Stop 1 (SS1) 365
8.5.3.1 Safe Stop 1 (SS1, time and acceleration controlled) 365
8.5.3.2 Safe Stop 1 without encoder (time and speed controlled) 367
8.5.3.3 Safe Stop 1 - Parameter 369
8.5.4 Safe Stop 2 (SS2) 370
8.5.4.1 EPOS and Safe Stop 2 372
8.5.5 Safe Operating Stop (SOS) 373

8.5.6 Safely Limited Speed (SLS) ... 375
8.5.6.1 Safely Limited Speed (SLS) ... 375
8.5.6.2 Safely Limited Speed without encoder ... 377
8.5.6.3 Safely Limited Speed - Parameter ... 380
8.5.6.4 EPOS and Safely-Limited Speed ... 381
8.5.7 Safe Speed Monitor (SSM) ... 382
8.5.7.1 Safe Speed Monitor with encoder ... 382
8.5.7.2 Safe Speed Monitor without encoder ... 385
8.5.7.3 Safe Speed Monitor restart ... 387
8.5.7.4 Overview of important parameters ... 388
8.5.8 Safe Acceleration Monitor (SAM) ... 389
8.5.9 Safe Brake Ramp (SBR) ... 391
8.5.10 Safe Direction (SDI) ... 394
8.5.10.1 Safe Direction with encoder ... 394
8.5.10.2 Safe Direction without encoder ... 396
8.5.10.3 Overview of parameters and function diagrams ... 398
8.5.11 Safety faults ... 399
8.5.12 Message buffer ... 403
8.5.13 Safe actual value acquisition ... 405
8.5.13.1 Reliable actual value acquisition with the encoder system ... 405
8.5.13.2 Safe current actual value acquisition without encoder ... 408
8.5.14 Forced dormant error detection ... 409
8.5.15 Safety Info Channel ... 411

8.6 Controlling the safety functions ... 413
8.6.1 Control of the Basic Functions via a safe input terminal pair ... 414
8.6.2 Control of the Extended Functions using safe input terminals ... 415
8.6.3 Note on F-DIs ... 419
8.6.4 Overview of the F-DOs ... 420
8.6.5 Control by way of PROFIsafe ... 422
8.6.5.1 Enabling of the control via PROFIsafe ... 422
8.6.5.2 Structure of telegram 30 ... 423

8.7 Commissioning ... 427
8.7.1 Safety Integrated firmware versions ... 427
8.7.2 Commissioning of Safety Integrated functions ... 428
8.7.2.1 General information ... 428
8.7.2.2 Prerequisites for commissioning the Safety Integrated functions ... 430
8.7.2.3 Default settings for commissioning Safety Integrated functions without encoder ... 430
8.7.2.4 Information pertaining to series commissioning ... 434
8.7.2.5 Setting the sampling times ... 435
8.7.3 Commissioning the safety terminals by means of STARTER/SCOUT ... 436
8.7.3.1 Basic sequence of commissioning ... 436
8.7.3.2 Configuration start screen ... 437
8.7.3.3 Configuration of the Safety terminals (Extended Functions) ... 439
8.7.3.4 Test stop ... 441
8.7.3.5 F-DI/F-DO configuration ... 445
8.7.3.6 Control interface ... 447
8.7.4 PROFIsafe configuration with STARTER ... 448
8.7.5 Procedure for configuring PROFIsafe communication ... 449
8.7.6 Information pertaining to component replacements ... 453

8.8 Application examples ... 454
8.8.1 Input/output interconnections for a safety switching device with CU305 ... 454

8.9 Acceptance test and acceptance report 458
8.9.1 General information 458
8.9.2 Acceptance test structure 459
8.9.2.1 Content of the complete acceptance test 460
8.9.2.2 Content of the partial acceptance test 463
8.9.2.3 Test scope for specific measures 466
8.9.3 Safety logbook 467
8.9.4 Acceptance reports 468
8.9.4.1 Plant description - Documentation part 1 468
8.9.4.2 Description of safety functions - Documentation Part 2 469
8.9.5 Acceptance tests 474
8.9.5.1 Acceptance tests – Basic Functions 475
8.9.5.2 Acceptance tests for Extended Functions (with encoder) 481
8.9.5.3 Acceptance tests for Extended Functions (without encoder) 509
8.9.6 Completion of certificate 520

9 Communication 521

9.1 Fieldbus configuration 521

9.2 Communication according to PROFIdrive 522
9.2.1 General information about PROFIdrive for SINAMICS 522
9.2.2 Application classes 523
9.2.3 Cyclic communication 528
9.2.3.1 Telegrams and process data 528
9.2.3.2 Description of control words and setpoints 532
9.2.3.3 Description of status words and actual values 544
9.2.3.4 Control and status words for encoder 558
9.2.3.5 Central control and status words 568
9.2.3.6 Motion Control with PROFIdrive 574
9.2.4 Acyclic communication 577
9.2.4.1 General information about acyclic communication 577
9.2.4.2 Structure of orders and responses 578
9.2.4.3 Determining the drive object numbers 583
9.2.4.4 Example 1: read parameters 584
9.2.4.5 Example 2: write parameters (multi-parameter request) 586

9.3 Communication via PROFIBUS DP 589
9.3.1 General information about PROFIBUS 589
9.3.2 Commissioning PROFIBUS 591
9.3.2.1 General information about commissioning 591
9.3.2.2 Commissioning procedure 594
9.3.2.3 Diagnostics options 594
9.3.2.4 SIMATIC HMI addressing 595
9.3.2.5 Monitoring: telegram failure 596
9.3.3 Motion Control with PROFIBUS 597
9.3.4 Slave-to-slave communication 602
9.3.4.1 General information 602
9.3.4.2 Setpoint assignment in the subscriber 604
9.3.4.3 Activating/parameterizing slave-to-slave communications 604
9.3.4.4 Commissioning of the PROFIBUS slave-to-slave communication 606
9.3.4.5 GSD file 615
9.3.4.6 Diagnosing the PROFIBUS slave-to-slave communication in STARTER 616

9.4 Communication via PROFINET IO 617

9.4.1 General information about PROFINET IO ... 617
9.4.1.1 Real-time (RT) and isochronous real-time (IRT) communication ... 617
9.4.1.2 Data transfer ... 618
9.4.1.3 General information about PROFINET IO for SINAMICS ... 618
9.4.1.4 Addresses ... 620
9.4.1.5 PROFINET: Address parameters ... 622
9.4.2 Hardware setup ... 622
9.4.2.1 Structuring CU305 with PROFINET ... 622
9.4.3 RT classes for PROFINET IO ... 624
9.4.4 Selection of the PROFINET variant ... 629
9.4.5 PROFINET GSD ... 630
9.4.6 Motion Control with PROFINET ... 632
9.4.7 PROFINET with 2 controllers ... 635
9.4.7.1 Settings for SINAMICS S ... 635
9.4.7.2 Configuring the controls ... 638
9.4.7.3 Overview of important parameters ... 639

9.5 Communication using USS ... 640
9.5.1 Configuring the USS interface ... 640
9.5.2 Transferring PZD ... 641
9.5.3 General information about communication with USS over RS485 ... 642
9.5.4 Structure of a USS telegram ... 642
9.5.5 User data range of the USS telegram ... 644
9.5.6 Data structure of the USS parameter channel ... 645
9.5.7 Time-out and other errors ... 651
9.5.8 USS process data channel (PZD) ... 653

10 Basic information about the drive system ... 655

10.1 Parameter ... 655

10.2 Data sets ... 658
10.2.1 CDS: Command Data Set ... 658
10.2.2 DDS: Drive Data Set ... 660
10.2.3 EDS: Encoder Data Set ... 661
10.2.4 MDS: Motor Data Set ... 662
10.2.5 Integration ... 662
10.2.6 Using data sets ... 663

10.3 Working with the memory card ... 665
10.3.1 Using parameter data sets ... 666
10.3.2 Working with firmware versions ... 669
10.3.3 Replacing the device ... 671
10.3.4 Removing the memory card safely ... 673
10.3.5 Integration ... 673

10.4 BICO technology: Interconnecting signals ... 674
10.4.1 Description ... 674
10.4.2 Binectors, connectors ... 675
10.4.3 Interconnecting signals using BICO technology ... 676
10.4.4 Internal encoding of the binector/connector output parameters ... 677
10.4.5 Sample interconnections ... 677
10.4.6 BICO technology: ... 678
10.4.7 Scaling ... 679

10.5 Inputs/outputs ... 680

10.5.1 Overview of inputs/outputs....680
10.5.2 Digital inputs/outputs....681
10.5.3 Analog Input....683
10.6 Replacing SMI and DQI components....683
10.7 System sampling times....684
10.8 Licensing....685
11 Appendix....689
11.1 Availability of SW functions....689
11.2 Availability of hardware components....691
11.3 List of abbreviations....692
Index....703

General information for commissioning 1

1.1 Explanations regarding the STARTER user interface

Use STARTER to create your sample project. The different areas of the user interface are used for different configuration tasks (refer to diagram below):

- Project navigator (area ①): this area displays the elements and objects that can be added to your project.
- Working area (area ②): you create the project in this area:
  - When you are configuring the drive, this area contains the Wizards that help you configure the drive objects.
  - When you configure, for example, the parameters for the speed setpoint filter
  - When you call up the expert list, the system displays a list of all the parameters that you can view or change.
- Detail view (area ③): This area provides detailed information on faults and warnings, for example.

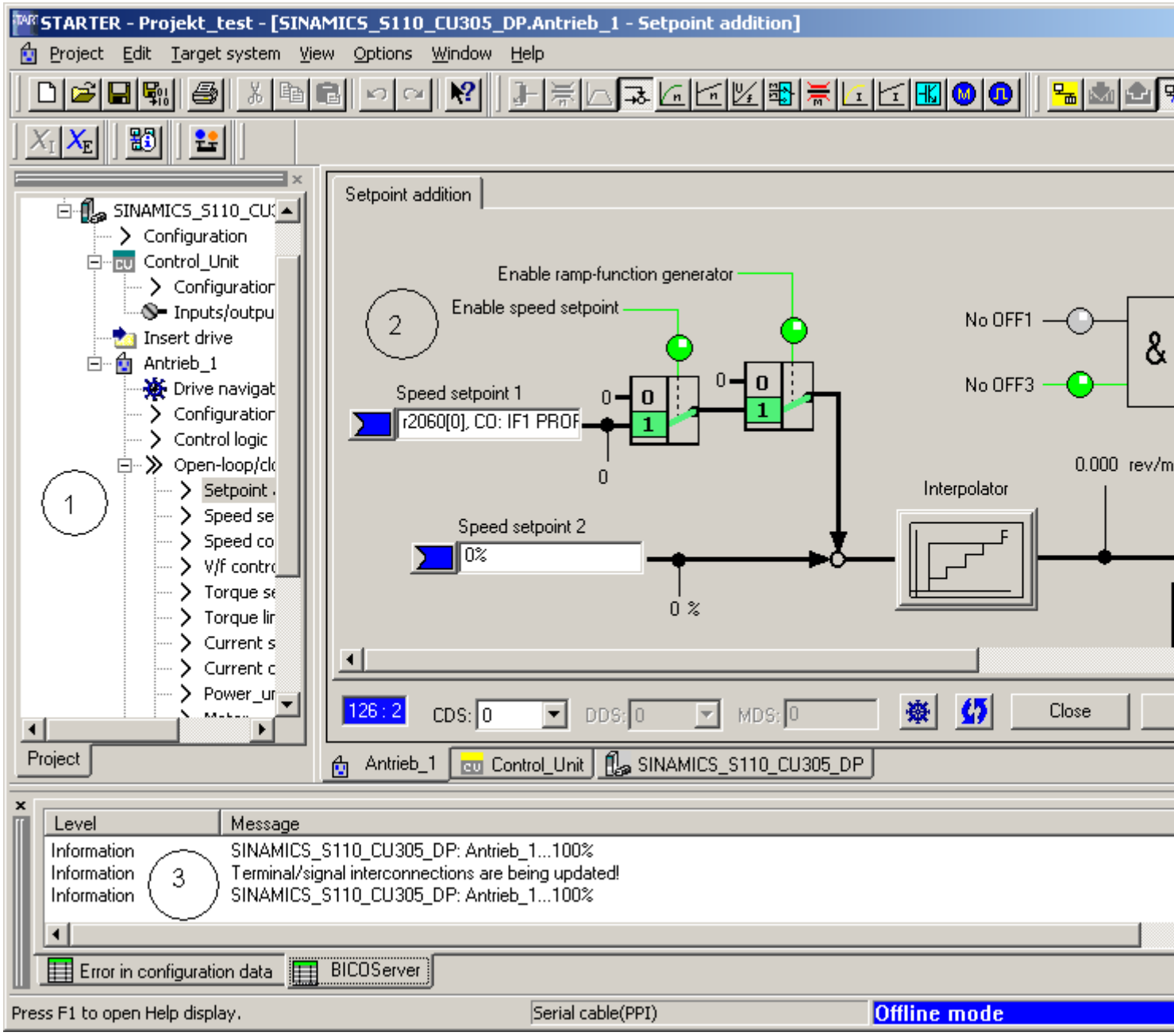

Figure 1-1 The different areas of the STARTER user interface

1.2 BICO interconnection procedure in STARTER

Introduction

Parameterization can be carried out via the following means:

- Expert list
- Graphical screen interface

The steps described below explain the general BICO interconnection procedure in STARTER.

Expert list

When carrying out BICO interconnection via the expert list, proceed as follows:

If you want, for example, to interconnect parameter **p0840** of the control word with r parameter **r2090[0]**, proceed as follows:

1. In the project navigator, call up the expert list by selecting, for example, **Drive_1 → right-click → Expert → Expert list**.

2. Search for parameter **p0840**.

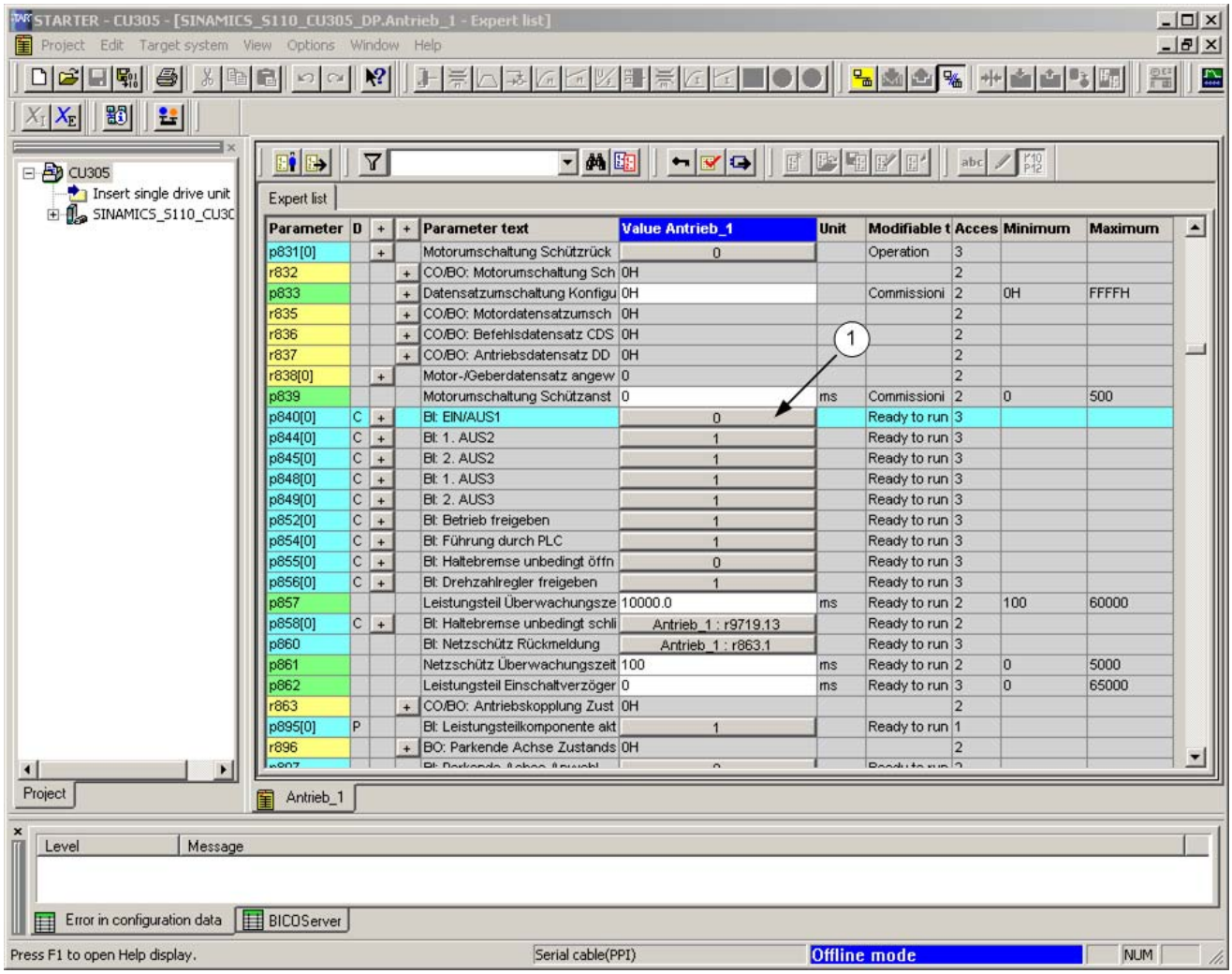

Figure 1-2 Interconnect 1

3. Click the button to interconnect with an r parameter (see ①).
4. A selection list from which you can select the available r parameters is now displayed.

5. Search for parameter **r2090**.

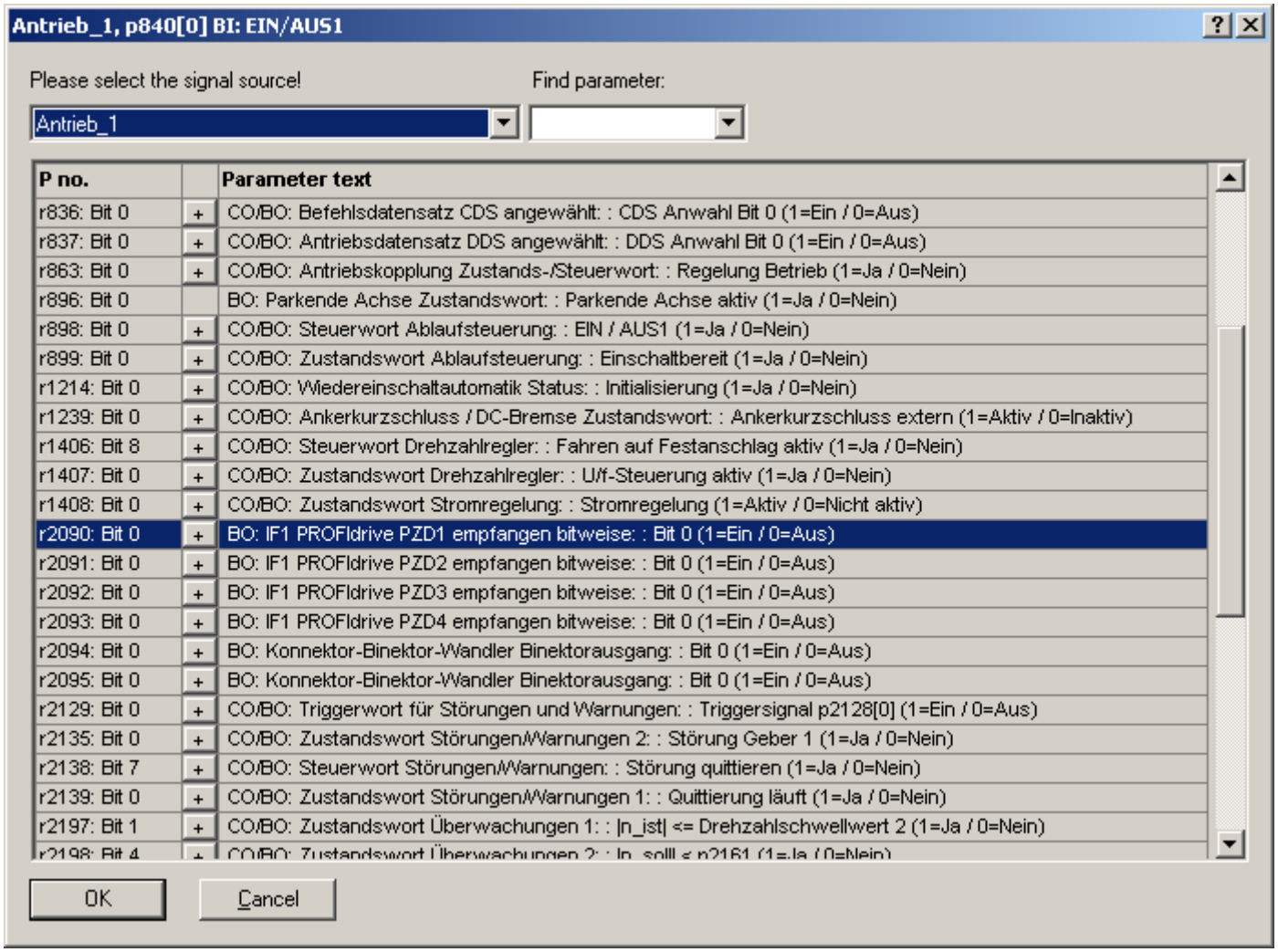

Figure 1-3 Interconnect 2

6. Click the "+" sign to open the 16 bits of r parameter **r2090**.

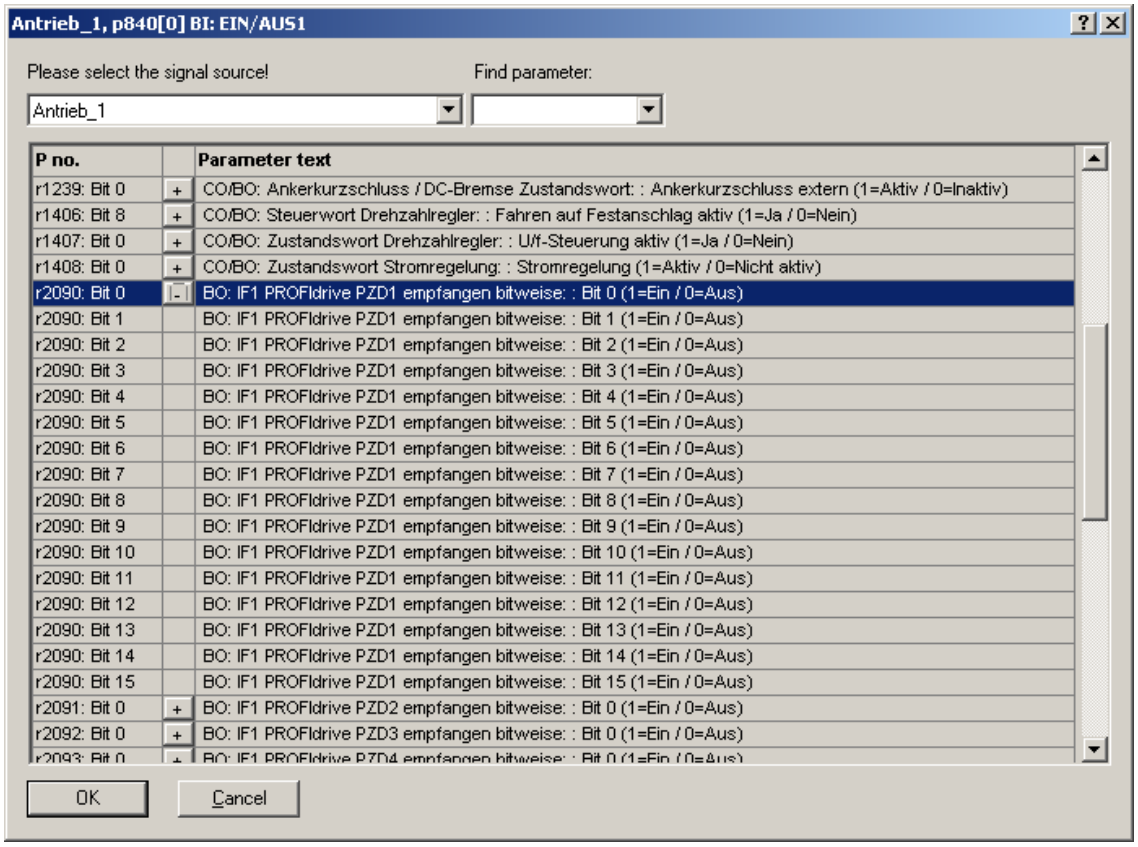

Figure 1-4 Interconnect 3

7. Double-click **r2090: Bit0**.
8. In the expert list, you can now see that **p0840** has been interconnected with r parameter **r2090[0]**.

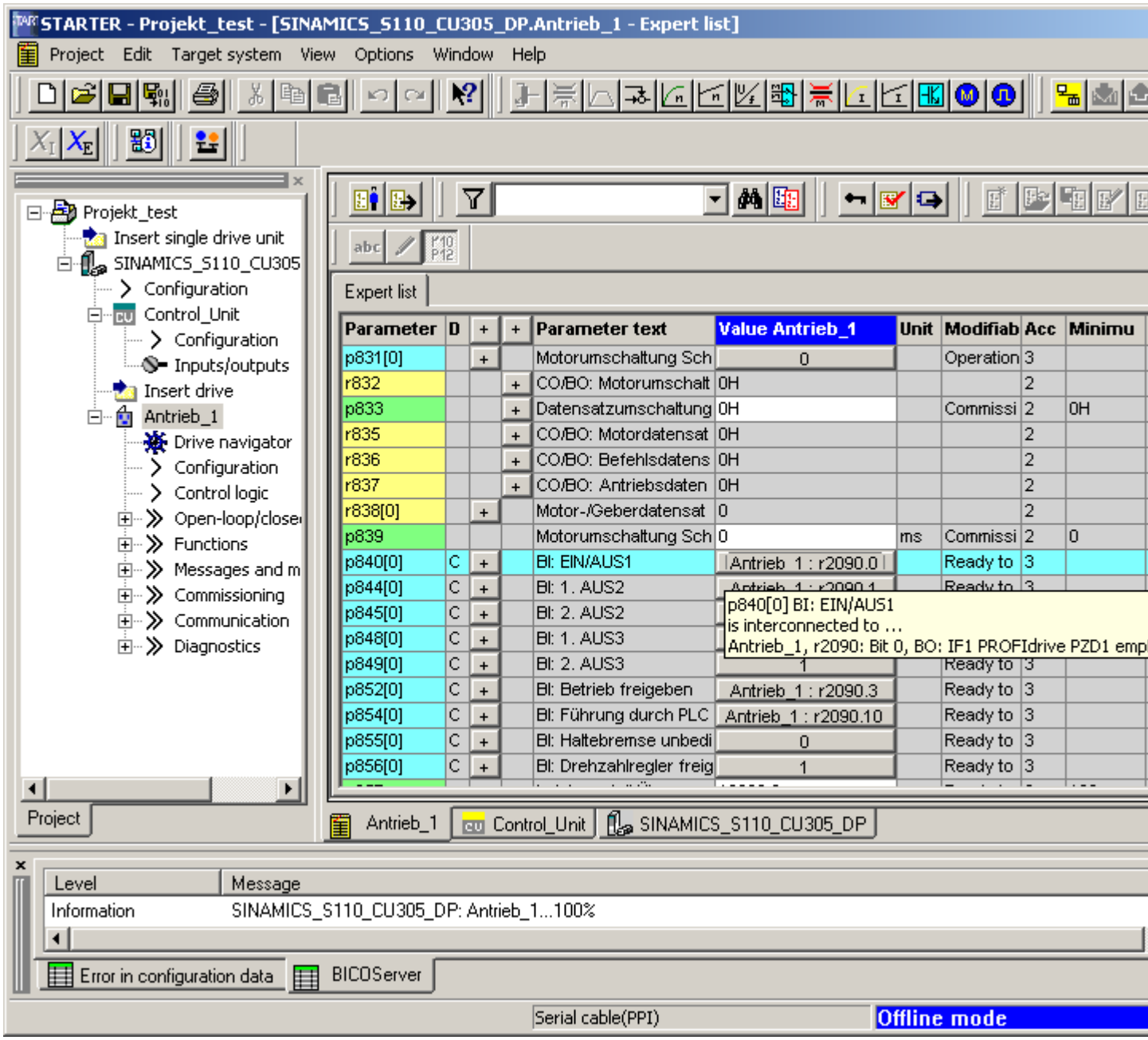

Figure 1-5 Interconnect 4

Graphical screen interface

When carrying out BICO interconnection via the graphical screen interface, proceed as follows:

If for the setpoint speed, for example, you want to interconnect p parameter **p1155[0]** for "speed setpoint 1" with r parameter **r2060[1]**, proceed as follows:

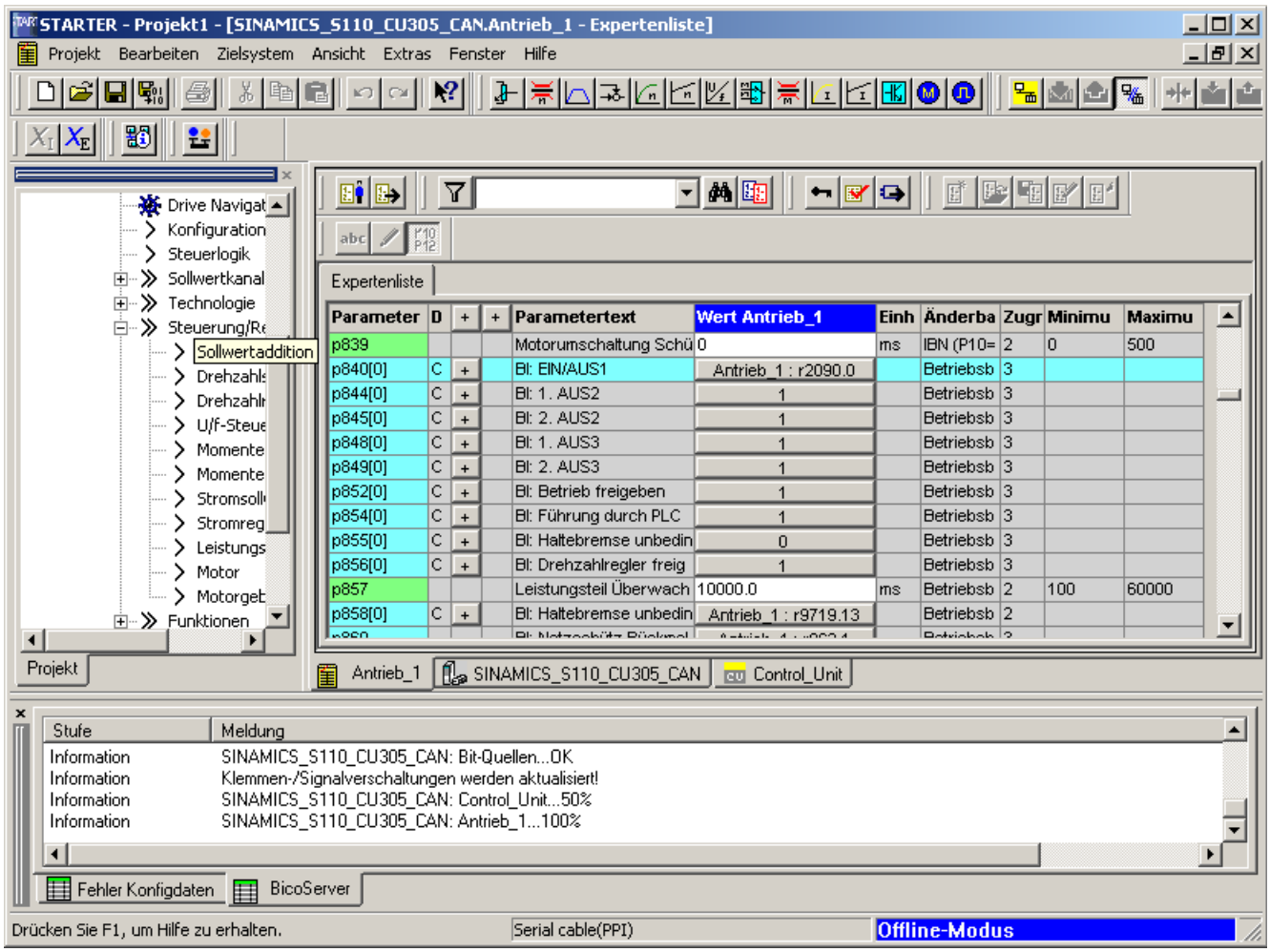

Figure 1-6 Interconnection via graphical screen interface 1

1. In the project navigator under **Drive_1 → Open loop/closed loop control**, double-click the selection **Setpoint addition**.

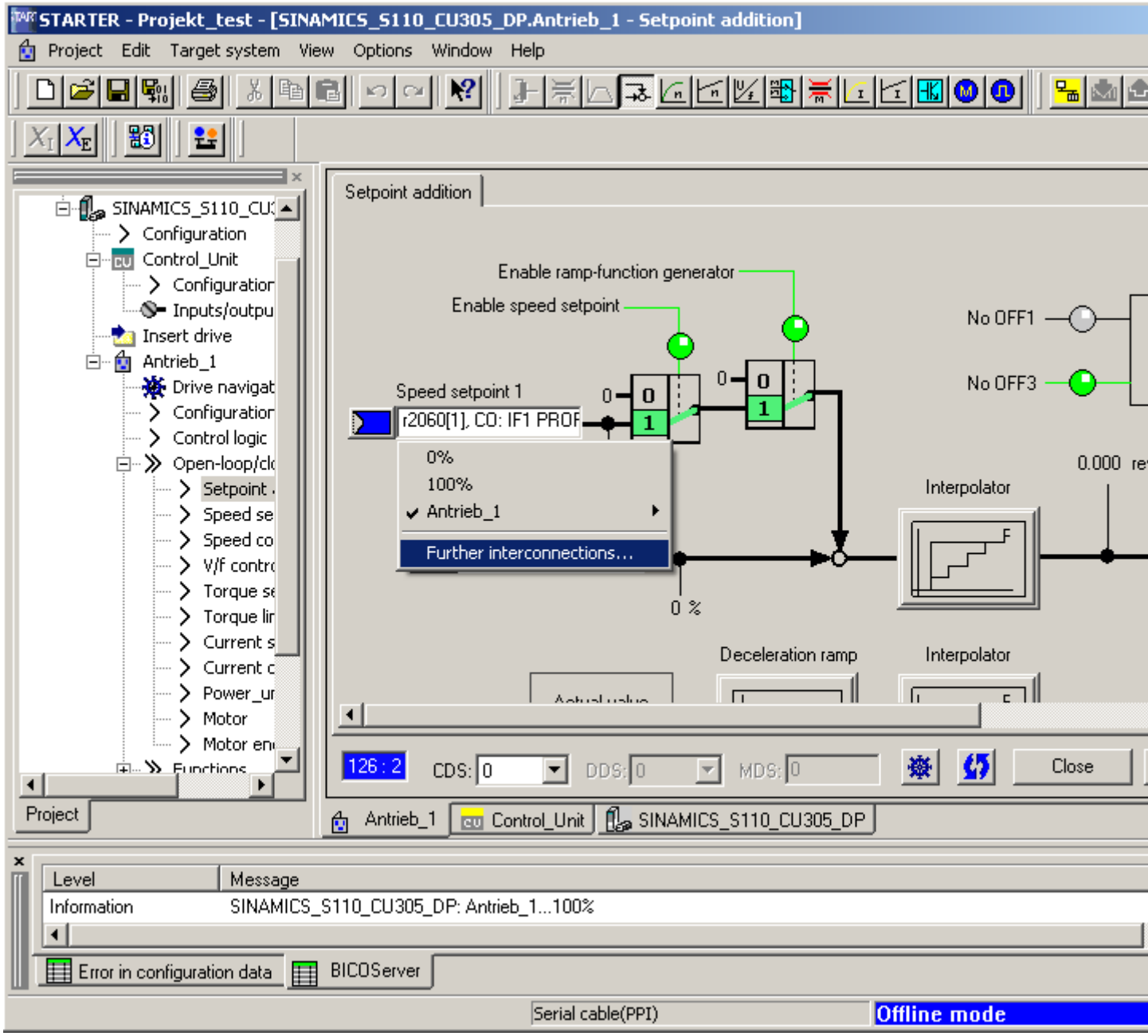

Figure 1-7 Interconnection via graphical screen interface 2

2. Click the **blue** field to the left of the field for **Speed setpoint 1** and then click the selection **Further interconnections**, which is now displayed.
3. A selection list from which you can select the available r parameters is now displayed.

4. Search for parameter **r2060**.

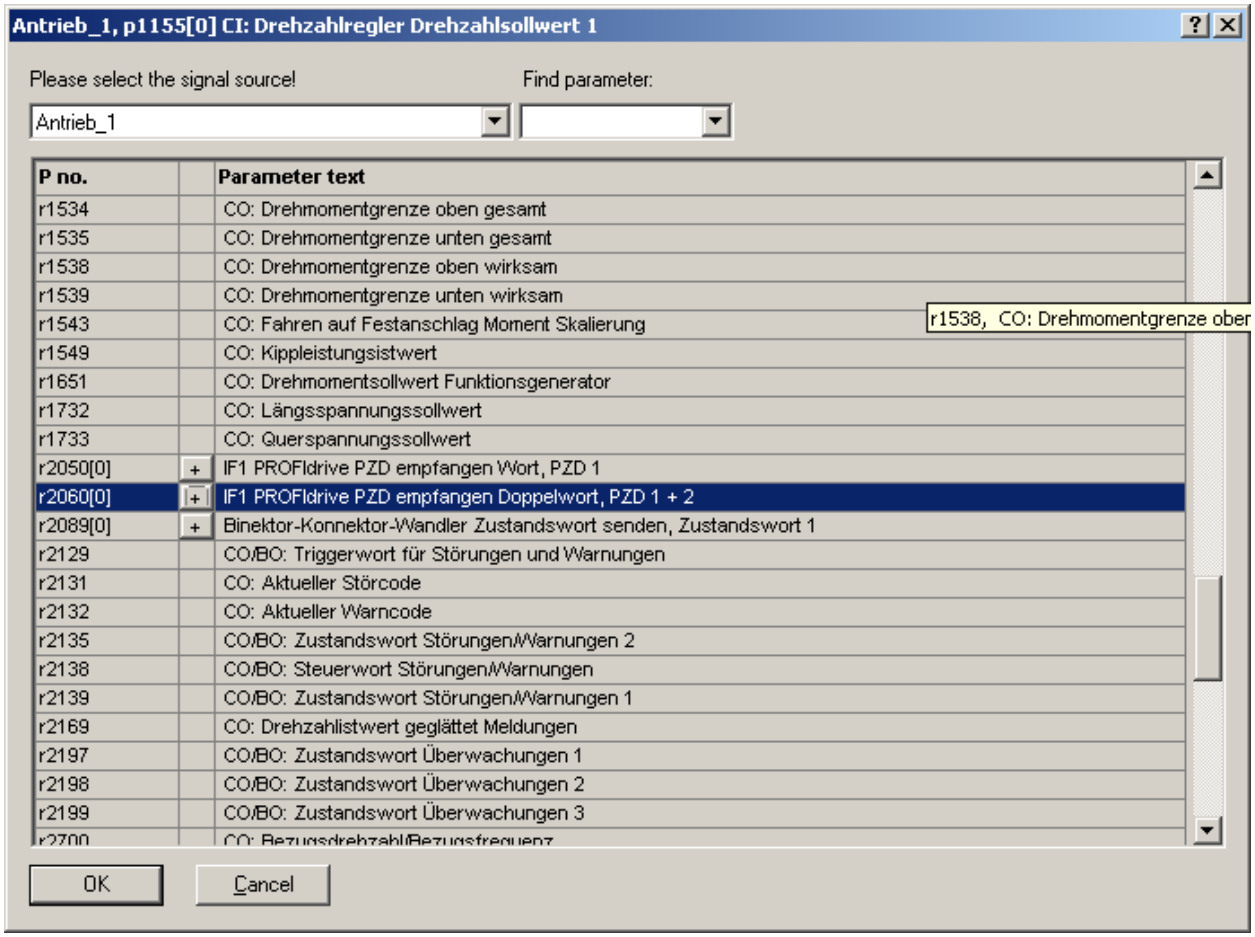

Figure 1-8 Interconnection via graphical screen interface 3

5. Click the "+" sign to open the 15 indices of r parameter **r2060**.

6. Double-click **r2060[1]**.

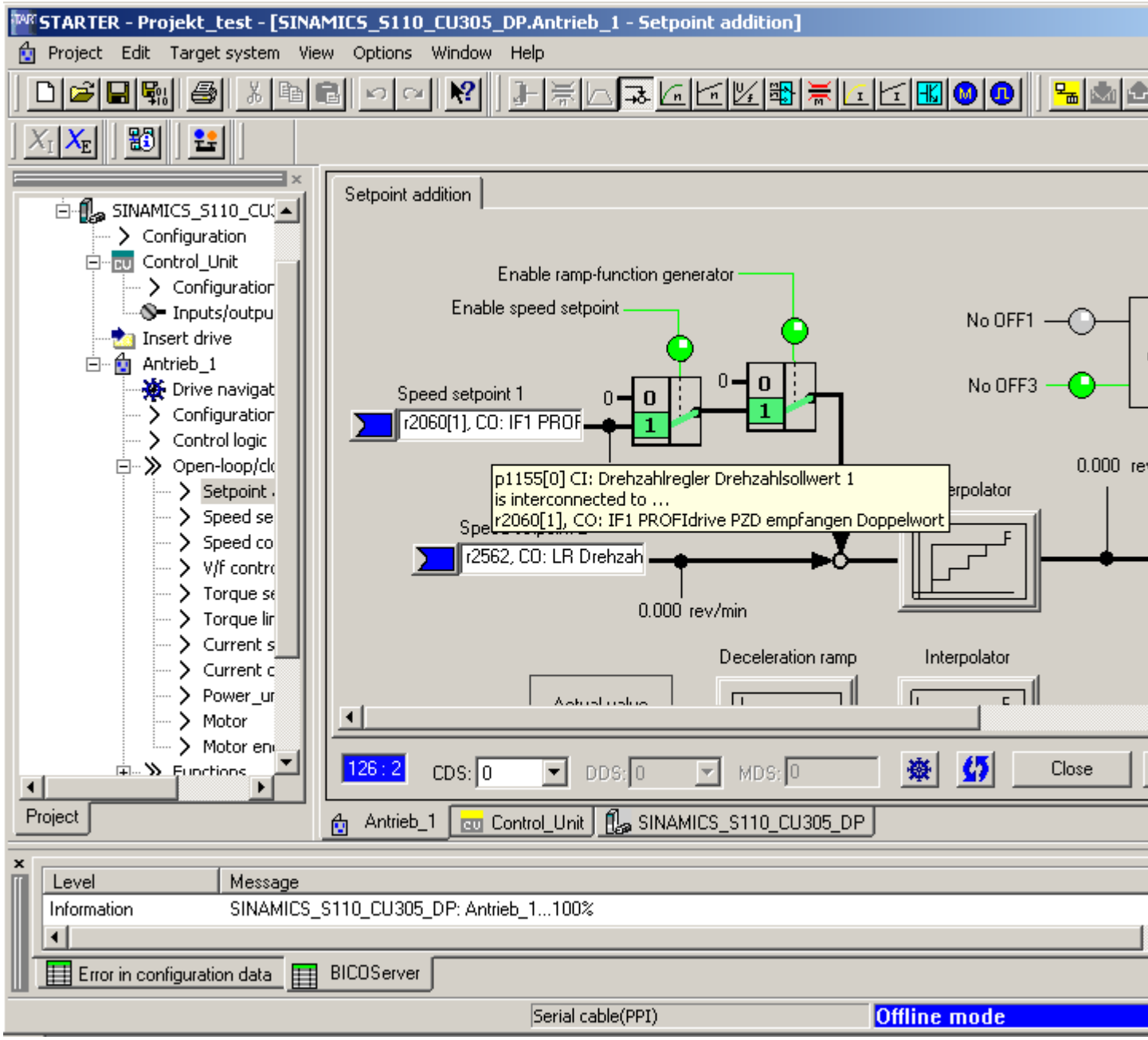

Figure 1-9 Interconnection via graphical screen interface 5

7. In the graphical screen interface, you can now see that **p1155** has been interconnected with r parameter **r2060[1]**.

1.3 DRIVE-CLiQ interface for CU305

The CU305 has a DRIVE-CLiQ interface. You may connect exactly one of the following components to this interface:

- SMI motor
- 1 encoder of type SMC10, SMC20, SMC30, SME20 or SME25

Further components or connections to the DRIVE-CLiQ interface are not permitted and lead to errors in the drive system.

Note

If you want to use an SSI encoder with incremental signals, you will need to connect it to the CU305 via an SMC30.

1.4 Notes on the commissioning of a 2-pole resolver as absolute encoder

You can use 2-pole (1 pole pair) resolvers as singleturn absolute encoders. The absolute encoder position actual value is provided in Gn_XIST2 (r0483[x]).

Actual position value format

The factory setting for the fine resolution of Gn_XIST1 differs from the fine resolution in Gn_XIST2 (p0418 = 11, p0419 = 9). This may cause a slight displacement of the encoder position after switching the drive unit off/on.

Therefore, when using a 2-pole resolver as an absolute encoder, we recommend that the fine resolution for Gn_XIST1 (p0418) is set the same as the fine resolution for Gn_XIST2 (p0419), e.g. p0418 = p0419 =11.

2-pole resolvers are automatically entered in the PROFIdrive profile (r0979) as singleturn absolute encoders.

Position tracking

You can also activate position tracking for a 2-pole resolver. Please note, however, that the resolver may not be moved more than half an encoder revolution (pole width) when switched off. The activation and configuration of the position tracking is described in the chapter "Position tracking".

EPOS - absolute encoder adjustment

If the 2-pole resolver is used as an absolute encoder for basic positioning (EPOS), the absolute encoder adjustment must be performed:

- via STARTER (Basic positioner → Referencing) or
- via the expert list.

To do this, set reference point coordinate p2599 to the value corresponding to the mechanical system and request the adjustment with p2507 = 2.

You will then need to back up the data from RAM to ROM.

1.5 Temperature sensors for SINAMICS components

The following table provides an overview of the components which are available in SINAMICS S110 with temperature sensor connections.

⚠ DANGER

Safe electrical isolation of temperature sensors

Only temperature sensors that meet the safety isolation specifications contained in EN 61800-5-1 may be connected to terminals "+Temp" and "-Temp". If these instructions are not complied with, there is a risk of electric shock!

Table 1- 1 Temperature sensor connections for SINAMICS S110

Module	Interface	Pin	Signal name	Technical specifications
SMC10/SMC20	X520 (SUB-D)	13 25	+Temp - Temp	Temperature sensor KTY84/130 / PTC
SMC30	X531 (terminal) Temperature channel 1	3 4	- Temp +Temp	Temperature sensor KTY84/130 / PTC / bimetallic-element switch with NC contact
CU305	X133 (terminal) Temperature channel 1	7	+ Temp	Motor temperature measurement KTY84/130 (KTY+) Temperature sensor connection KTY84/130 / PTC
		8	M (- Temp)	Ground for KTY or PTC
CU305	X23 (SUB-D) Temperature channel 1	1 8	+Temp - Temp	Temperature sensor KTY84/130 / PTC / bimetallic-element switch with NC contact

Commissioning information

The index [0...n] used in the following identifies either the motor data set or the encoder data set.

SMC10/SMC20

Use the STARTER screen (\Signals and monitoring\Motor temperature) to parameterize motor temperature evaluation via SUB-D socket X520.

SMC30

In addition to temperature evaluation via terminal X531 (temperature channel 1), this module also has temperature evaluation at SUB-D socket X520 (temperature channel 2).

With the default setting (p0600 = 1 "Temperature via encoder 1" and p0601 = 2 "KTY") the temperature is evaluated via the first temperature channel. The temperature sensor is connected to terminal X531 on the SMC30. The temperature is shown via r0035.

Note

If you use an SMC30 with the default settings, then the temperature channel is evaluated at terminal X531 (pins 3 and 4). In this case, an evaluation via the SUB-D socket is not possible.

CU305

One temperature sensor can also be connected to this module via terminal X133 **or** via SUB-D socket X23.

It is not possible to use both temperature channels (X23 and X133) at the same time. Both channels are connected with each other. The sensors would be connected in parallel and the temperature display would show the wrong value. As such, only one temperature sensor may be connected to the CU305.

Use the **Motor temperature** STARTER screen (\Signals and monitoring\Motor temperature) to determine whether motor temperature evaluation is performed via the CU305 connections.

Faults and alarms

F07011 drive: Motor overtemperature

KTY sensor:
The motor temperature has exceeded the fault threshold (p0605) or the timer stage (p0606) after the alarm threshold was exceeded (p0604) has expired.
This results in the reaction parameterized in p0610.

PTC sensor:
The tripping threshold of 1650 Ω was exceeded and the timer stage (p0606) has expired.
This results in the reaction parameterized in p0610.

A07015 drive: Motor temperature sensor alarm

An error was detected when evaluating the temperature sensor set in p0600 and p0601.

When the fault occurs, the time is started in p0607. If the fault is still present after this time has expired, fault F07016 is output (not until at least 0.2 s after alarm A07015, however).

F07016 drive: Motor temperature sensor fault

An error was detected when evaluating the temperature sensor set in p0600 and p0601.

If alarm A07015 is present, the time in p0607 is started. If the fault is still present after this time has expired, then fault F07016 is output; however, at the earliest, 1 s after alarm A07015.

Function diagrams (see SINAMICS S110 List Manual)

- 8016 Signals and monitoring - Thermal monitoring of motor

Overview of important parameters (see SINAMICS S110 List Manual)

- r0035 Motor temperature
- p0600[0..n] Motor temperature sensor for monitoring
- p0601[0..n] Motor temperature sensor type
- p0604[0...n] Motor overtemperature alarm threshold
- p0605[0...n] Motor overtemperature fault threshold
- p0606[0...n] Motor overtemperature timer stage
- p0607[0...n] Temperature sensor fault timer stage
- p0610[0...n] Motor overtemperature reaction
- p460x[0...n] Motor temperature sensor (x+1) sensor type, x = 0..3

Commissioning preparations for PROFIBUS 2

Before you start commissioning, you will need to carry out the preparations described in this chapter:

- Requirements for commissioning
- PROFIBUS components

2.1 Requirements for commissioning

The basic requirements for commissioning a SINAMICS S110 drive system are as follows:

- STARTER commissioning tool
- PROFIBUS interface
- Wired drive line-up (see Equipment Manual)

The following diagram shows an overview of an example configuration with blocksize components.

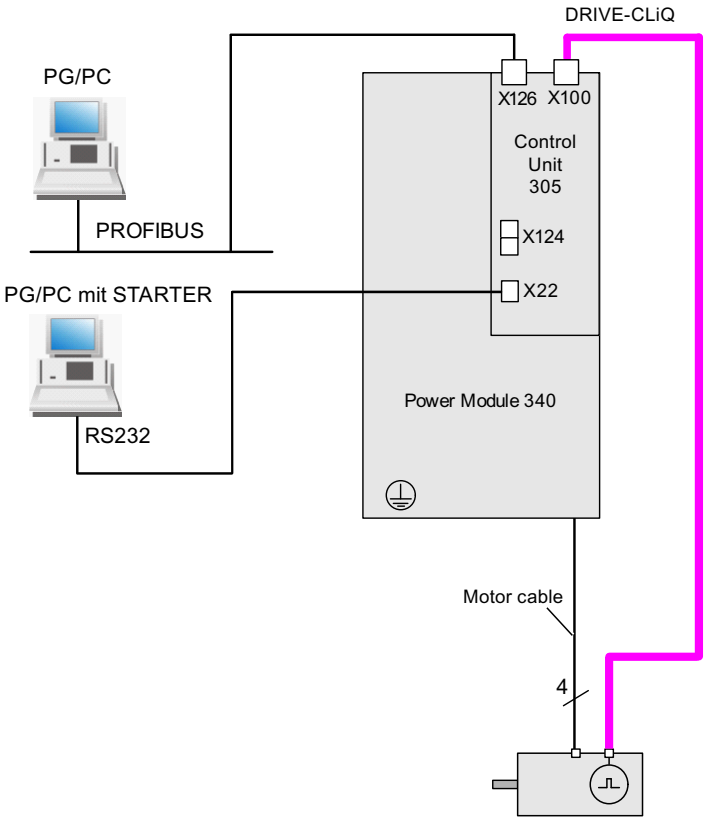

Figure 2-1 Component configuration (example)

Check list for commissioning blocksize power units

The following checklist must be carefully observed. The safety information in the Manuals must be read and understood before starting work.

Table 2- 1 Check list for commissioning blocksize

Check	O. K.
Are the ambient conditions in the permitted range (see Equipment Manual)?	
Is the component firmly attached to the fixing points provided?	
Can the cooling air flow unobstructed?	
Have the ventilation clearances for the components been observed?	
Are all necessary components of the configured drive line-up installed and available?	
Have the DRIVE-CLiQ limitations for CU305 been observed?	
Have the line-side and motor-side power cables been dimensioned and routed in accordance with the ambient and routing conditions?	
Have the maximum permissible cable lengths between the frequency converter and the motor (depending on the type of cables used) been observed?	
Have the cables been properly connected with the correct torque to the component terminals?	
Have the cables for the motor and low-voltage switchgear been connected with the required torques?	
Has all wiring work been successfully completed?	
Are all connectors correctly plugged in and screwed in place?	
Have all the screws been tightened to the specified torque?	
Are the shield connections installed correctly?	

2.2 PROFIBUS components

We recommend the following components for communication via PROFIBUS:

1. Communication modules if PG/PC interface via the **PROFIBUS interface**

- CP5511 (PROFIBUS connection via PCMCIA card in the notebook as programming device)
  PROFIBUS card CP5511 permits a maximum of 10 slave connections to be established. For large projects (many CUs) with several drive units - and therefore more than 10 PROFIBUS slaves - problems can be encountered when STARTER goes online with the notebook.
  Remedy: Replace interface card CP5511 with a CP5512 interface card or via menu item "Select target system/target devices..." only select the drive units that you actually want to work with.
- CP5512 (PROFIBUS connection via CARDBUS)

  Configuration: PCMCIA type 2 card + adapter with 9-pin SUB-D socket for connection to PROFIBUS.

  For MS Windows 2000/XP Professional and PCMCIA 32 only

  Order No.: 6GK1551-2AA00
- CP5611 A2 (PROFIBUS connection via short PCI card)

  Configuration: Short PCI card with 9-pin SUB-D socket for connection to PROFIBUS.

  Not for Windows 95/98SE

  Order No.: 6GK1561-1AA01
- CP5613 A2 (PROFIBUS connection via short PCI card)

  Configuration: Short PCI card with 9-pin SUB-D socket for connection to PROFIBUS.

  Order No.: 6GK1561-3AA01
- CP5711 (PROFIBUS connection via USB port (USB V2.0))
  Configuration: USB port (USB V2.0) + adapter with 9-pin SUB-D socket connector to connect to PROFIBUS.
  Used with driver SIMATIC Net PC Software Edition 2008 + SP2
  Order No.: 6GK1571-1AA00

2. **Connecting cable**
   - between: CP 5xxx ↔ PROFIBUS

     Order No.: 6ES7901-4BD00-0XA0
   - MPI cable (SIMATIC S7)

     Order No.: 6ES7901-0BF00-0AA0

Cable lengths

Table 2- 2 Permissible PROFIBUS cable lengths

Baud rate [bit/s]	Max. cable length [m]
9.6 k to 187.5 k	1000
500 k	400
1.5 M	200
3 to 12 M	100

2.3 Connection via serial interface

Prerequisite

There must be a serial interface (COM) on the PC from which the connection is to be made.

Settings

1. In STARTER, go to **Project > Set PG/PC interface** and select the **Serial cable (PPI)** interface.
   If this interface is not in the selection list, you will have to add it via **Select** before proceeding any further.

   Note

   If you are unable to add the interface to the selection menu, you will have to install the driver for the serial interface.
   This is located under the following path on the STARTER CD:
   \installation\starter\starter\Disk1\SerialCable_PPI\
   The STARTER must not be active while the driver is being installed.

2. Enter the following settings. The "0" address and the transmission rate (e.g. 19.2 kbit/s) are important here.

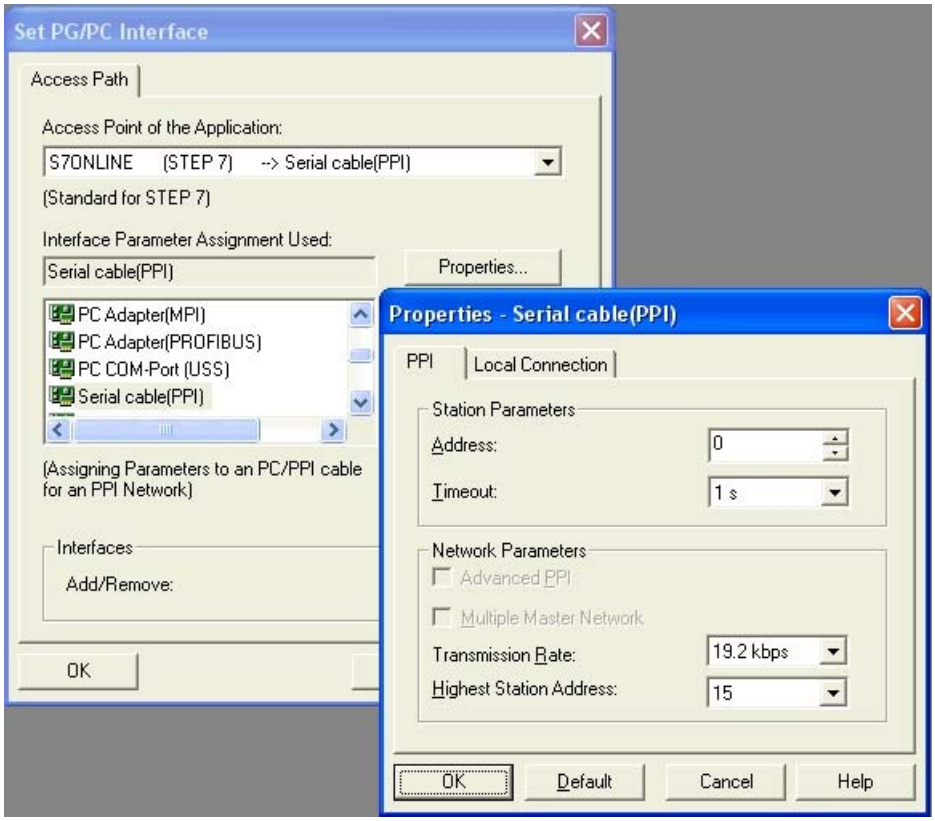

Figure 2-2 Setting the interface

3. The Control Unit's PPI address is pre-set to "3" in the factory.
4. You should also set the bus address to "3" during setup, or under "Properties" in the drive unit's shortcut menu.

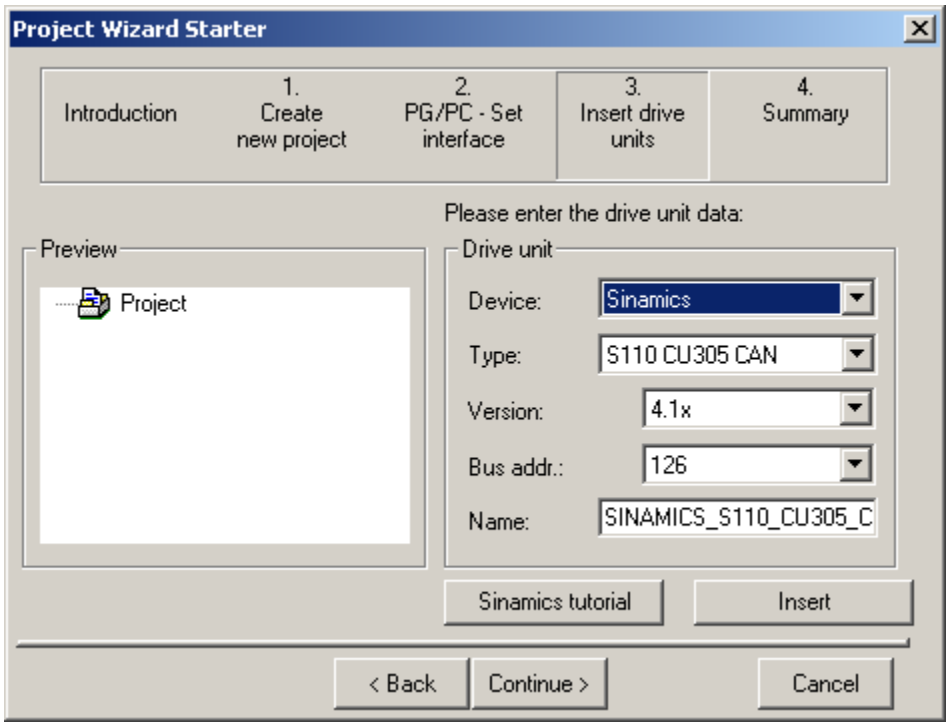

Figure 2-3 Setting the bus address

5. You must use a null modem cable to connect the PC (COM interface) to the Control Unit. This interface must not be switched.

2.4 Powering-up/powering-down the drive system

Powering-up the drive

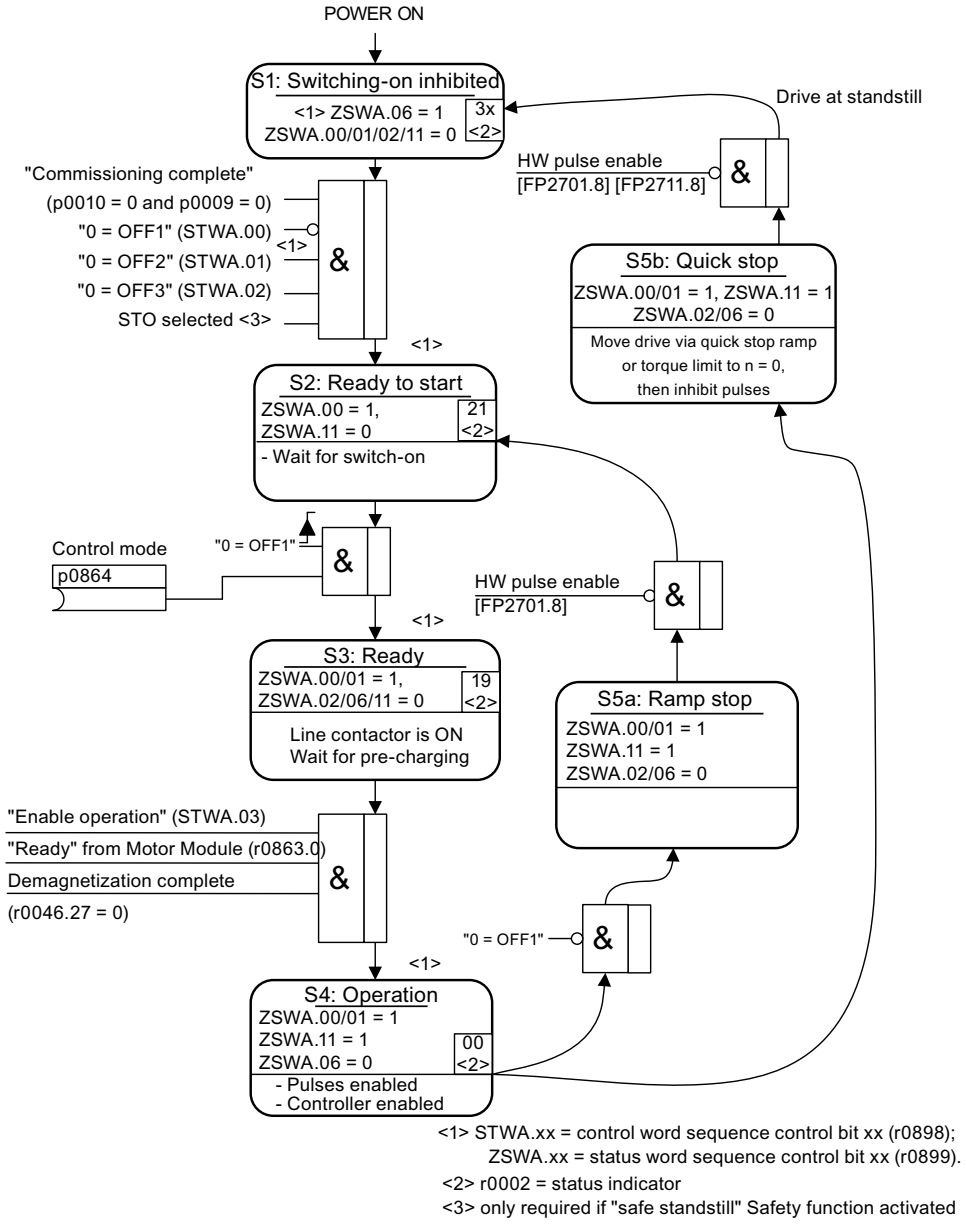

Figure 2-4 Powering-up the drive

Off responses

- OFF1
  - n_set = 0 is input immediately to brake the drive along the deceleration ramp (p1121).
  - When zero speed is detected, the motor holding brake (if parameterized) is closed (p1215). The pulses are suppressed when the brake application time (p1217) expires. Zero speed is detected when the actual speed drops below the speed threshold (p1226) or once the monitoring time (p1227) started when speed setpoint ≤ speed threshold (p1226) has expired.
- OFF2
  - Immediate pulse suppression, the drive coasts to a standstill.
  - The motor holding brake (if parameterized) is closed immediately.
  - Switching on inhibited is activated.
- OFF3
  - n_set = 0 is input immediately to brake the drive along the OFF3 deceleration ramp (p1135).
  - When zero speed is detected, the motor holding brake (if parameterized) is closed. The pulses are suppressed when the brake application time (p1217) expires. Zero speed is detected when the actual speed drops below the speed threshold (p1226) or once the monitoring time (p1227) started when speed setpoint ≤ speed threshold (p1226) has expired.
  - Switching on inhibited is activated.

Control and status messages

Table 2- 3 Power-on/power-off control

Signal name	Internal control word	Binector input	PROFdrive/Siemens telegram 1 ... 111
0 = OFF1	STWA.00 STWAE.00	p0840 ON/OFF1	STW1.0
0 = OFF2	STWA.01 STWAE.01	p0844 1. OFF2 p0845 2. OFF2	STW1.1
0 = OFF3	STWA.02	p0848 1. OFF3 p0849 2. OFF3	STW1.2
Enable operation	STWA.03 STWAE.03	p0852 Enable operation	STW1.3

Table 2- 4 Switch-in/switch-out status signal

Signal name	Internal status word	Parameter	PROFdrive/Siemens telegram 1 ... 111
Ready to start	ZSWA.00 ZSWAE.00	r0899.0	ZSW1.0
Ready for operation	ZSWA.01 ZSWAE.01	r0899.1	ZSW1.1
Operation enabled	ZSWA.02 ZSWAE.02	r0899.2	ZSW1.2
Switching on inhibited	ZSWA.06 ZSWAE.06	r0899.6	ZSW1.6
Pulses enabled	ZSWA.11	r0899.11	ZSW1.11 [1)]

[1)] Only Siemens telegrams 102 and 103

Function diagrams (see SINAMICS S110 List Manual)

- 2610 Sequence control - sequencer
- 2634 Missing enable signals, line contactor control

Commissioning with PROFIBUS 3

3.1 Sequence of operations during commissioning

Once the basic requirements have been met, you may proceed as follows to commission the drive:

Table 3- 1 Commissioning

Step	Activity
1	Create project with STARTER.
2	Configure the drive unit in STARTER.
3	Save the project in STARTER.
4	Go online with the target device in STARTER.
5	Load the project to the target device.
6	The motor starts to run.

Note

If motors with a DRIVE-CLiQ interface are used, all motor and encoder data should be saved in a non-volatile manner for spare part usage of the Sensor Module on the motor via p4692 = 1.

3.1.1 Safety guidelines

⚠ DANGER

A hazardous voltage will be present in all components for a further five minutes after the system has been shutdown.

Note the information on the component!

⚠ CAUTION

A project with Safety Integrated must only be created online.

Note

Please observe the installation guidelines and safety instructions in the SINAMICS S110 Equipment Manual.

CAUTION

In STARTER, after the changeover of the axis type via p9302/p9502 and subsequent POWER ON, the units that depend on the axis type are only updated after a project upload.

3.2 STARTER commissioning tool

Brief description

The STARTER commissioning tool is used to commission drive units from the SINAMICS product family.

STARTER can be used for the following:

- Commissioning
- Testing (via the control panel)
- Drive optimization
- Diagnostics

System prerequisites

The system requirements for STARTER can be found in the "Readme" file in the STARTER installation directory.

3.2.1 Important STARTER functions

STARTER supports the following tools for managing the project:

- Copy RAM to ROM
- Download to target device
- Load to PG/PC
- Restoring the factory settings
- Commissioning wizard
- Displaying toolbars

Copy RAM to ROM

You can use this function to save volatile Control Unit data to the non-volatile memory. This ensures that the data is still available after the 24 V Control Unit supply has been switched off.

This function can be activated as follows:

- Tools → Setting → Download → Activate "Copy RAM to ROM"

  This means that every time data is loaded to the target system by choosing "Load project to target system", the data is stored in the non-volatile memory.
- Right-click Drive unit → Target device → Copy RAM to ROM
- Drive unit grayed out → "Copy RAM to ROM" button

NOTICE
You may only switch off the power supply to the Control Unit after saving has finished; i.e. after saving has started, wait until it has finished and parameter p0977 has the value 0 once more.

Download to target device

You can use this function to load the current STARTER project to the Control Unit. First of all, a consistency check is performed on the project, with messages triggered if any inconsistencies are detected. You will need to rectify any inconsistencies before performing a download. If no inconsistencies are detected, the data is loaded to the work memory of the Control Unit. A reset is then triggered.

This function can be activated as follows:

- Right-click Drive unit → **Target device → Download to target device**
- Drive unit grayed out → **Download to target device** button
- Online/offline comparison screen → **Download to target device** button
- Project to all drive units simultaneously:
  Load project to target system button, **Project → Download to target device** menu

Load to PG/PC

You can use this function to load the current Control Unit project to STARTER.

This function can be activated as follows:

- Right-click Drive unit → **Target device → Load to PG/PC**
- Drive unit grayed out → **Load project to PG/PC** button
- Online/offline comparison screen → **Load project to PG/PC** button

Restoring the factory settings

You can use this function (p0970 = 1) to set all the parameters in the work memory of the Control Unit to the factory settings. The CU305 will then perform an automatic start. All relevant parameters found are written to the work memory (RAM). As part of this process, various factory-set parameters are automatically updated to actual (more recent) values. Once this automatic configuration is complete, a project with all available drive parameters for the actual arrangement will be available in the target system.

This function, which is called "Restore factory settings", can be activated as follows:

- Right-click Drive unit → Target device → Restore factory settings
- Drive unit grayed out → **Restore factory settings** button

Displaying toolbars

The toolbars can be activated by choosing View → Toolbars (check mark).

Creating and copying data sets (offline)

Drive and command data sets (DDS and CDS) can be added in the drive's configuration screen. The corresponding buttons must be clicked.

For more information about data sets, see the **Drive system principles** chapter.

Upgrading firmware and the project in STARTER

Preconditions are a functional project, a memory card containing the new firmware and a current version of STARTER.

Upgrade the project

1. Is the project in STARTER? Yes: continue with 3.

2. Use STARTER to download project to PG:
   – Connect with target system (go online)
   – Downloading the project into the PG
3. Install the latest firmware version for the project.
   – In the project navigator, right-click Drive unit → Target device → Device version.
   – For example, select version "SINAMICS S110 V4.3x" -> Change version.

Update the firmware and load the new project to the target device.

1. Insert the memory card containing the new firmware version into the Control Unit:
   – Disconnect the Control Unit from the power supply →
   – Insert the memory card containing the new firmware version →
   – Power up the Control Unit again.
2. Go online and download the project to the target device → Copy RAM to ROM.
3. Upgrading the firmware for the DRIVE-CLiQ components takes place automatically.
4. Reset the drive unit using a POWER ON (Control Unit and all DRIVE-CLiQ components). The new firmware version is only effective in the DRIVE-CLiQ components from this point onwards; it also appears in the version overview.

3.2.2 Activating online operation: STARTER via PROFIBUS

Description

The following options are available for online operation via PROFIBUS:

- Online operation via PROFIBUS

STARTER via PROFIBUS (example with 2 CU305 and a CU310 DP)

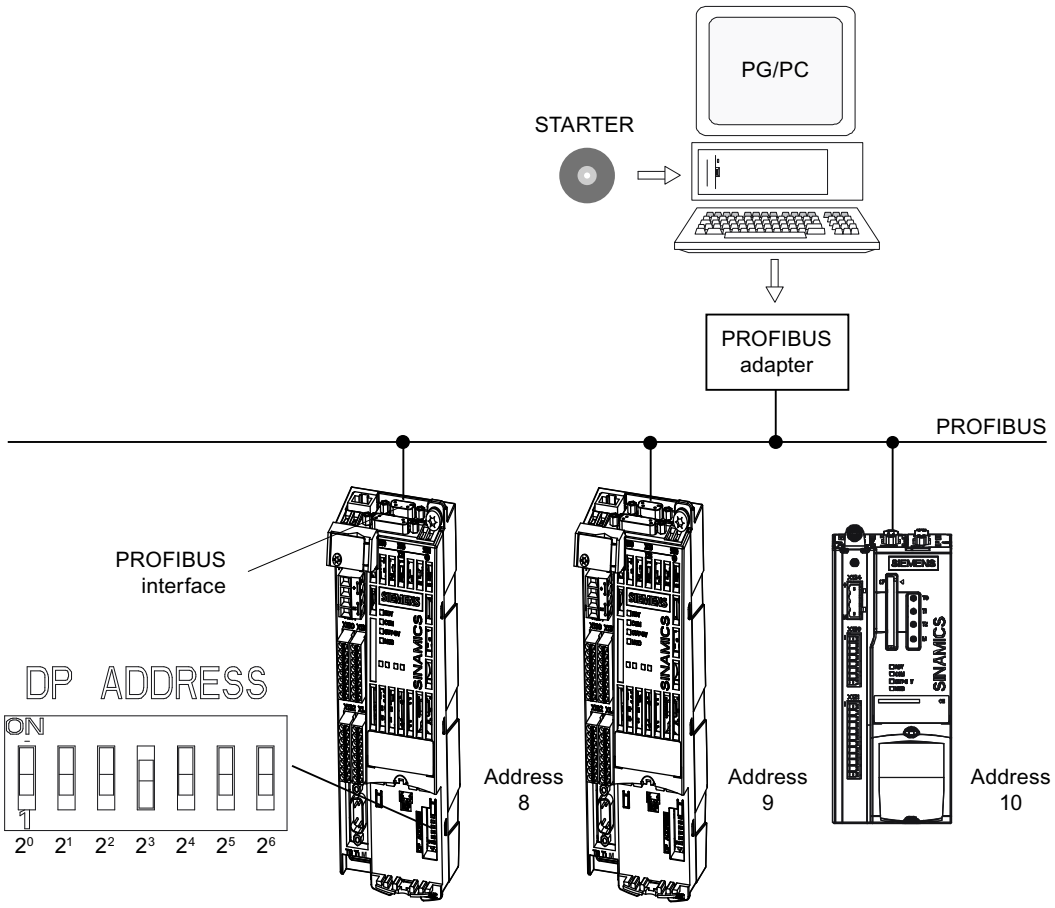

Figure 3-1 STARTER via PROFIBUS (example with 2 CU305 and a CU310 DP)

Settings in STARTER for direct online connection via PROFIBUS

The following settings are required in STARTER for communication via PROFIBUS:

- Tools → Set PG/PC interface...

Add/remove interfaces

- Tools → Set PG/PC interface... → Properties

  Activate/deactivate "PG/PC is the only master on the bus".

Note

- Baud rate

  Switching STARTER to a working PROFIBUS:

  STARTER automatically detects the baud rate used by SINAMICS for the PROFIBUS.

  Switching the STARTER for commissioning:

  The Control Unit automatically detects the baud rate set in STARTER.
- PROFIBUS addresses

  The PROFIBUS addresses for the individual drive units must be specified in the project and must match the address settings on the devices.

3.3 Basic Operator Panel 20 (BOP20)

Brief description

The Basic Operator Panel 20 (BOP20) is a basic operator panel with six keys and a display unit with background lighting. The BOP20 can be plugged onto the SINAMICS Control Unit and operated.

The following functions are possible using BOP20

- Entering parameters
- Display of operating modes, parameters, alarms and faults
- Powering-up/powering-down while commissioning

Further information: See 'Parameterizing using the BOP20 (Basic Operator Panel 20)' chapter

3.3.1 Important functions via BOP20

Description

Using the BOP20, the following functions can be executed via parameters that support you when handling projects:

- Restoring the factory settings
- Copy RAM to ROM
- Acknowledge error

Restoring the factory settings

The factory setting of the complete device can be established in the drive object CU.

- p0009 = 30
- p0976 = 1

Copy RAM to ROM

You can initiate the saving of all parameters to the non-volatile memory in the drive object CU:

- Press the P key for 3 seconds,
  or
- p0009 = 0
- p0977 = 1

NOTICE
This parameter is not accepted if an identification run (e.g. motor identification) has been selected on a drive.

Acknowledge error

To acknowledge all the faults that have been rectified, press the Fn key.

3.4 Creating a project in STARTER

3.4.1 Creating a project offline

To create a project offline, you need the PROFIBUS address, the device type (e.g. SINAMICS S110), and the device version (e.g. FW 4.1).

Table 3- 2 Sequence for creating a project in STARTER (example)

	What to do?	How to do it?	Remark
1.	Create a new project	• Operator action: – Menu "Project" → New ... • User projects: – Projects already in the target directory • Name: Project_1 (can be freely selected) Type: Project Storage location (path): Default (can be set as required) 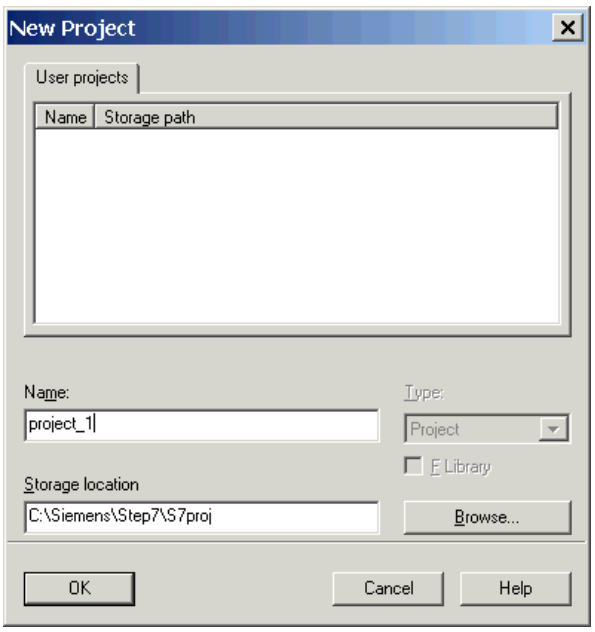	The project is created offline and loaded to the target system when configuration is complete.

	What to do?	How to do it?	Remark
2.	Add individual drive	Operator action: → Double-click "Add individual drive unit". Device type: SINAMICS S110 CU305 DP (can be selected) Device version: 4.1x (can be selected) Address type: PROFIBUS/USS/PPI (can be selected) Bus address: 37 (can be selected)	Information about the bus address: When commissioning the system for the first time the PROFIBUS address of the Control Unit must be set here. The address is set via the address switch on the Control Unit (or via p0918 if the address switch = "all ON" or "all OFF" (factory setting = 126)).
	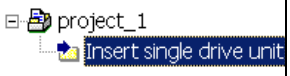	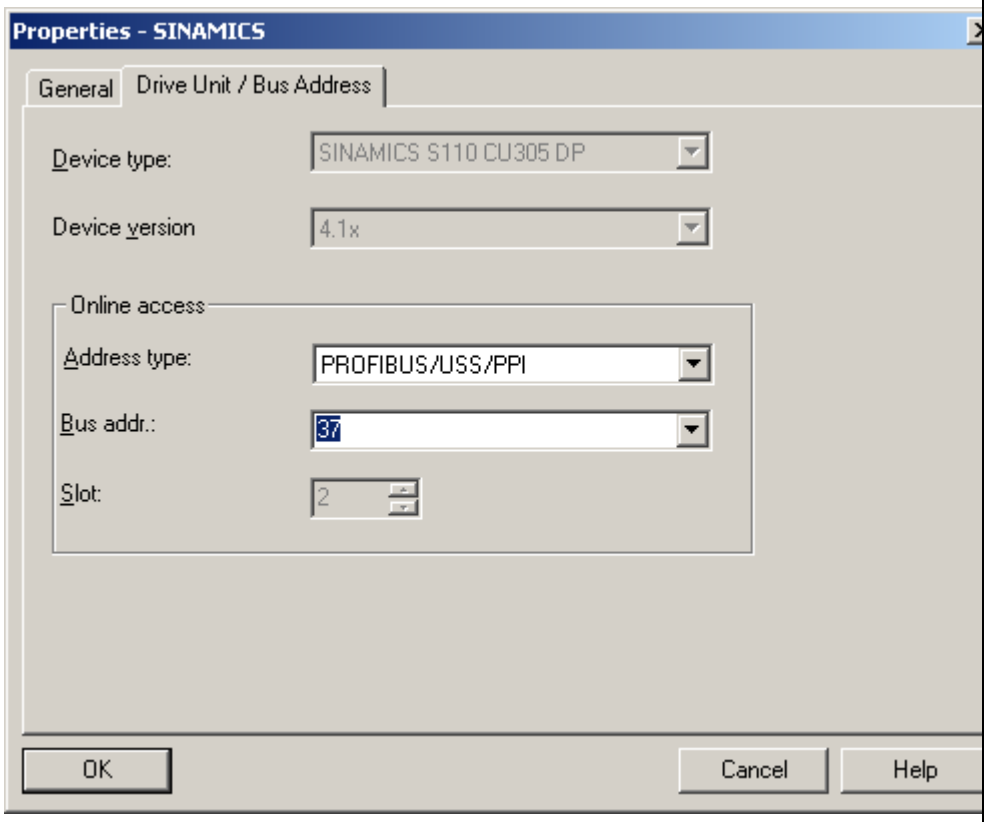	
3.	Configure the drive unit.	Once you have created the project, you have to configure the drive unit. The "Example of first commissioning using STARTER" chapter contains an example scenario.	

3.4.2 Searching for a drive unit online

To search for a drive unit online, the drive unit and the PG/PC must be connected via PROFIBUS.

Table 3- 3 Sequence for searching for a drive unit in STARTER (example)

	What to do?	How to do it?
1.	Create a new project	Operator action: Menu: "Project" → New with Wizard Click "Find drive unit online".
		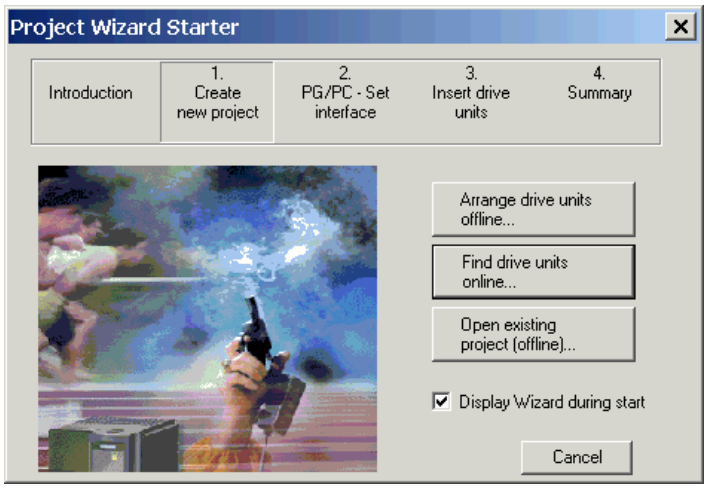
1.1	Enter the project data.	Project name: Project_1 (can be freely selected) Author: Any Remark: Any
		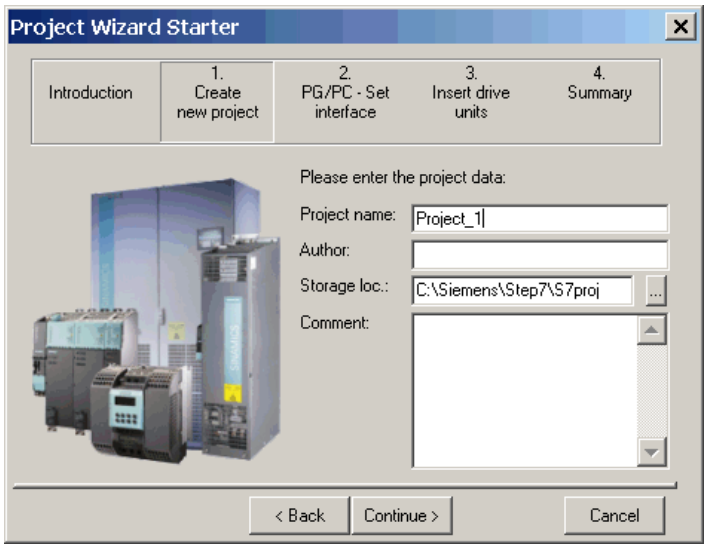
2.	Set up the PG/PC	Here, you can set up the PG/PC interface by clicking "Change and test".

	What to do?	How to do it?
	interface	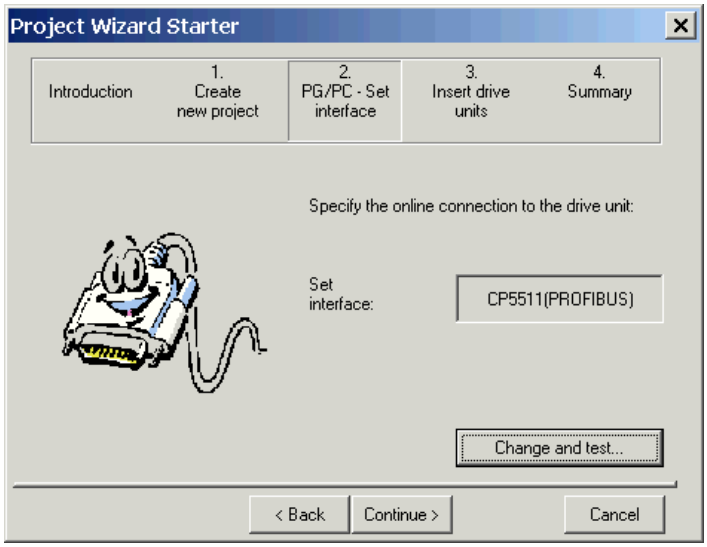
3.	Insert drives	Here, you can search for nodes that have been accessed. 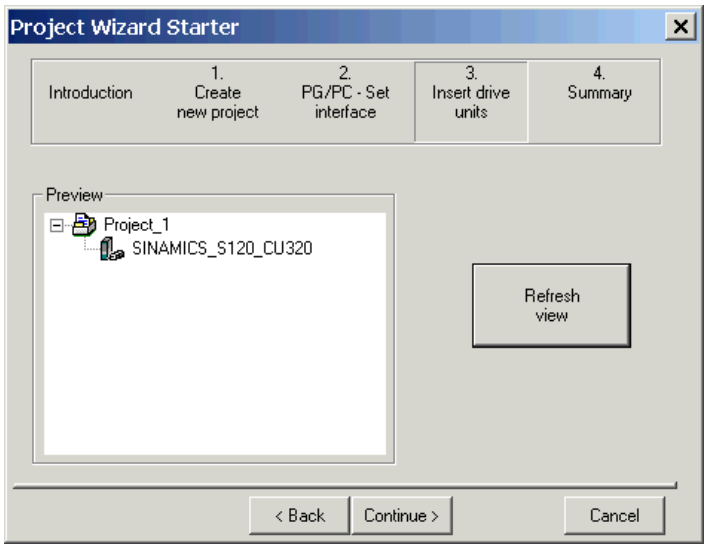

	What to do?	How to do it?
4.	Summary	You have now created the project. → Click "Complete". 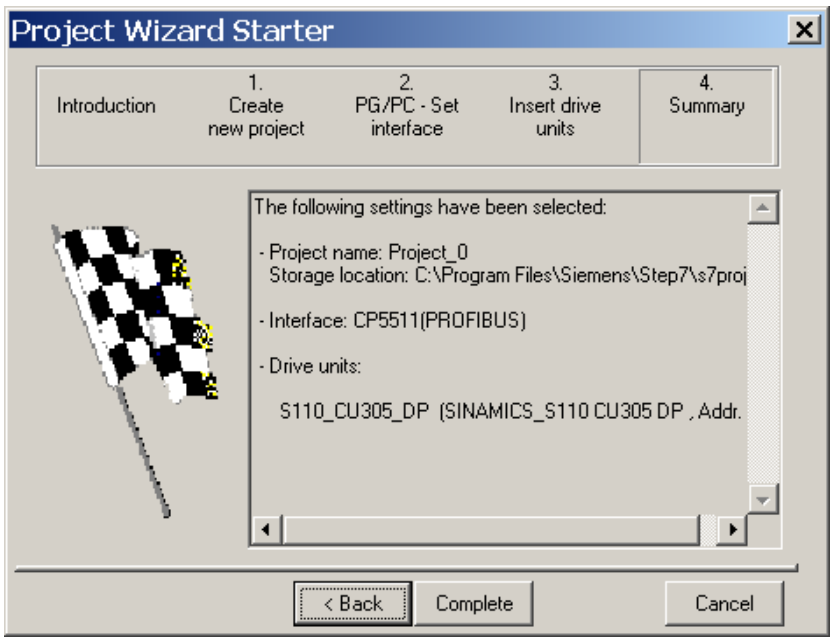
5.	Configure the drive unit.	Once you have created the project, you have to configure the drive unit. The "Example of first commissioning using STARTER" chapter contains an example scenario.

3.4.3 Searching for nodes that can be accessed

To search for a drive unit online, the drive unit and the PG/PC must be connected via PROFIBUS. The interface must be set correctly in STARTER.

3.5 Example of first commissioning with STARTER

The example provided in this section explains all the configuration and parameter settings that are required for first commissioning. Commissioning is carried out using the STARTER commissioning tool.

Requirements for commissioning

1. The checklist for commissioning (Table 1-1 or 1-2 in Section 1.1) has been filled out and the points ticked off.
2. STARTER is installed and activated.

   → See the "Readme" file on the STARTER installation CD.
3. The power supply (24 VDC) is switched on.

3.5.1 Task

1. Commission a drive system with the following components:

Table 3- 4 Component overview

Designation	Component	Order number
Closed-loop control and infeed		
Control Unit	Control Unit 305	
Drive 1		
Sensor Module	SMC20	6SL3055-0AA00-5BAx
Motor	Synchronous motor	1FK7061-7AF7x-xxxx
Motor encoder	Incremental encoder sin/cos C/D 1 Vpp 2048 p/r	1FK7xxx-xxxxx-xAxx

2. The drive is to be enabled via PROFIBUS.

- Telegram for drive 1
- Standard telegram 4: Speed control, 1 position encoder

Note

For more information about telegram types, see the section titled "Communication via PROFIBUS" or see the SINAMICS S110 List Manual.

3.5.2 Commissioning with STARTER (example)

The table below describes the steps for commissioning with STARTER.

Table 3- 5 Sequence for commissioning with STARTER (example)

	What to do?	How to do it?	Remark
1.	Automatic configuration	Operator action: → "Project" → "Connect to target system" → Double-click "Automatic configuration". → Follow the instructions provided in the wizard.	-
2.	Configuring a drive	The drive needs to be configured as follows. → "Drive_1" → Double-click "Configuration" → Click "Configure DDS".	-
3.1	Control structure	You can activate the function modules. You can select the control type.	-
3.2	Power unit	The wizard displays the data determined automatically from the electronic type plate.	-
3.3	Motor	The name of the motor (e.g. tooling labeling) can be entered. Select standard motor from list: Yes Select the motor type (see type plate).	You can select a standard motor from the motor list or you can enter the motor data manually. You can then select the motor type.
3.4	Motor brakes	Here, you can configure the brake and activate the "Extended brake control" function module.	Additional information: See "Extended brake control" chapter.
3.5	Encoder	Motor encoder: Select a standard encoder from the list: Yes Select "2048, 1 Vpp, A/B C/D R"	If you are using an encoder that does not appear in the list, you can also enter the data manually.
3.6	Process data exchange	PROFIBUS telegram type 4 (drive 1) and 3 (drive 2) must be selected.	-
3.7	Summary	The drive data can be copied to the clipboard for plant documentation purposes and then added to a text program, for example.	-
Note The reference parameters and limit values can be protected against being automatically overwritten in STARTER by setting p0340 = 1: Drive → Configuration → Reference parameters/Blocked list tab.			
5.	Save the parameters on the device	• Connect with target system (go online) • Target system → Download to target device • Target system → Copy RAM to ROM (saving data to non-volatile memory)	Point the mouse at the drive unit (SINAMICS S110) and right-click.
6.	The motor starts to run.	The drive can be set in motion using the control panel in STARTER. • Following the pulse enable, the drive will switch to operating status.	For more information about the control panel, see the STARTER online help. The control panel supplies the control word 1 (STW1) and speed setpoint 1 (NSOLL).

STARTER diagnosis options

Under "Component" → Diagnosis → Control/status words

- Control/status words
- Status parameters
- Alarm history

3.6 Initial commissioning using servo AC DRIVE with BOP20 as an example

The example provided in this section explains all the configuration and parameter settings that are required for first commissioning. Commissioning is performed using the BOP20.

Commissioning requirement

- The check list for commissioning (Table 1-1 or 1-2 from Section 1.1) has been filled out and the points complied with.

3.6.1 Task

1. Commission a drive unit (operating mode servo, closed-loop speed control) with the following components:

Table 3- 6 Component overview

Designation	Component	Order number
Closed-loop control		
Control Unit	Control Unit 305 DP	6SL3040-0JA00-0AA0
Operator Panel	Basic Operator Panel 20 (BOP20)	6SL3055-0AA00-4BAx
Drive		
Power Module	Power Module 340	6SL3210-xxxx-xxxx
Motor	Synchronous motor with DRIVE-CLiQ interface	1FK7061-7AF7x-xAxx
Motor encoder via DRIVE-CLiQ	Incremental encoder sin/cos C/D 1 Vpp 2048 p/r	1FK7xxx-xxxxx-xAxx

2. Commissioning is performed using the BOP20.

3. The function keys of the Basic Operator Panel (BOP) should be parameterized so that the ON/OFF signal and the speed setpoints are entered using these keys.

3.6.2 Component wiring (example)

The following diagram shows a possible component configuration and wiring option.

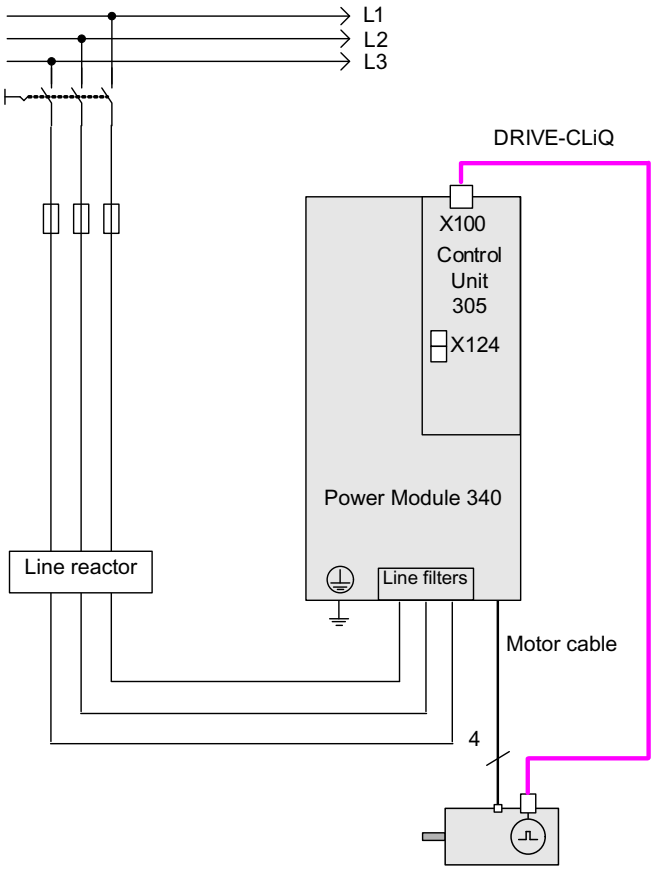

Figure 3-2 Component wiring with integrated Sensor Module (example)

For more information on wiring and connecting the encoder system, see the Equipment Manual.

3.6.3 Quick commissioning using the BOP (example)

Table 3- 7 Quick commissioning for a motor with a DRIVE-CLiQ interface

	Procedure	Description		Factory setting
Note: The drive must be set to the factory settings before first commissioning is carried out.				
1.	p0009 = 1	**Device commissioning parameter filter ***		1
		0	Ready	
		1	Device configuration	
		30	Parameter reset	
2.	p0009 = 2	**Device commissioning parameter filter ***		1
		0	Ready	
		1	Device configuration	
		2	Defining the drive type / function module	
		30	Parameter reset	
Note: When a configured DRIVE-CLiQ component is booted for the first time, the firmware is automatically updated to the status in the non-volatile memory. This may take a few minutes and is indicated by the READY-LED on the corresponding components flashing green/red and the Control Unit flashing orange (0.5 Hz). Once all updates have been completed, the READY-LED on the Control Unit flashes orange at 2 Hz and the corresponding READY-LED on the components flashes green/red at 2 Hz. For the firmware to be activated, a POWER ON must be carried out for the components.				
3.	p0108[1] = H0004		**Drive object, function module ***	0000
		Bit 8	Extended setpoint channel	
4.	p0009 = 0	**Device commissioning parameter filter ***		1
		0	Ready	
		1	Device configuration	
		30	Parameter reset	
5.	DO = 2	**Select drive object (DO) 2 (= SERVO)**		1
		1	CU	
		2	SERVO	
		To select a drive object (DO), simultaneously press the Fn key and an arrow key. The selected project is displayed at the top left.		
6.	p0840[0] = r0019.0(DO 1)	**BI: ON/OFF1 [CDS]** Sets the signal source for STW1.0 (ON/OFF1) Interconnection with r0019.0 of the drive object Control Unit (DO 1) Effect: Signal ON/OFF1 from the BOP		0
7.	p1070[0] = r1024	**CI: Main setpoint [CDS]** Sets the signal source for speed setpoint 1 of the speed controller. Interconnecting to r1024 on its own drive object		0
8.	Save all parameters	Press the P key for 3 s.		

	Procedure	Description	Factory setting
9.		Switching the drive on with the ON pushbutton Binector output r0019.0 is set using this pushbutton.	
* These parameters offer more setting options than the ones described here. For more possible settings, see the SINAMICS S110 List Manual. [CDS] Parameter depends on command data sets (CDS). Data set 0 is preset. [DDS] Parameter depends on drive data sets (DDS). Data set 0 is preset. BI binector input BO binector output CI connector input CO connector output			

Commissioning with CANopen

4

4.1 Requirements for commissioning

Section content

This section describes the commissioning prerequisites:

- CU305 CAN with connection to PG/PC
- STARTER commissioning tool on PG/PC

You can find a detailed description of the CANopen interface on the CU305 CAN in the SINAMICS S110 Equipment Manual.

The "STARTER commissioning tool" chapter of this manual contains an introduction to the STARTER commissioning tool.

4.1.1 Previous knowledge

To fully understand this Commissioning Chapter on the CANopen interface, you must be familiar with CANopen terminology.

This Chapter includes, among other things,

- An overview of the most important terms and abbreviations
- A breakdown of the communication objects in the CANopen object directory in the CANopen slave software

You must be familiar with the following standards:

Note

SINAMICS with CANopen complies with the following standards:

- CiA DS-301 V4.02 (Application Layer and Communication Profile)

- CiA DS-402 V2.0 (Device Profile for Drives and Motion Control)

- CiA DR-303-3 V1.2 (Indicator Specification)

- CiA DS-306 V1.3: (Electronic data sheet specification for CANopen)

4.1.2 Prerequisites for commissioning CU305 with CANopen

To commission a CAN bus in a SINAMICS drive line-up, the following hardware and software components are required:

- CU305 CAN with firmware in the non-volatile memory.
- Link between the CANopen Control Unit and a PG/PC with an RS232 connection.
- STARTER commissioning tool on the PG/PC.

Note

Please see the SINAMICS S110 Manual for a description of the components in a SINAMICS drive line-up and for information about wiring the interface to a PC/PG. The STARTER documentation contains information on how to install the STARTER commissioning tool.

4.1.3 CAN bus on the CU305

The integrated CAN interface is used to connect drives in the SINAMICS S110 drive system to higher-level automation systems with a CAN bus.

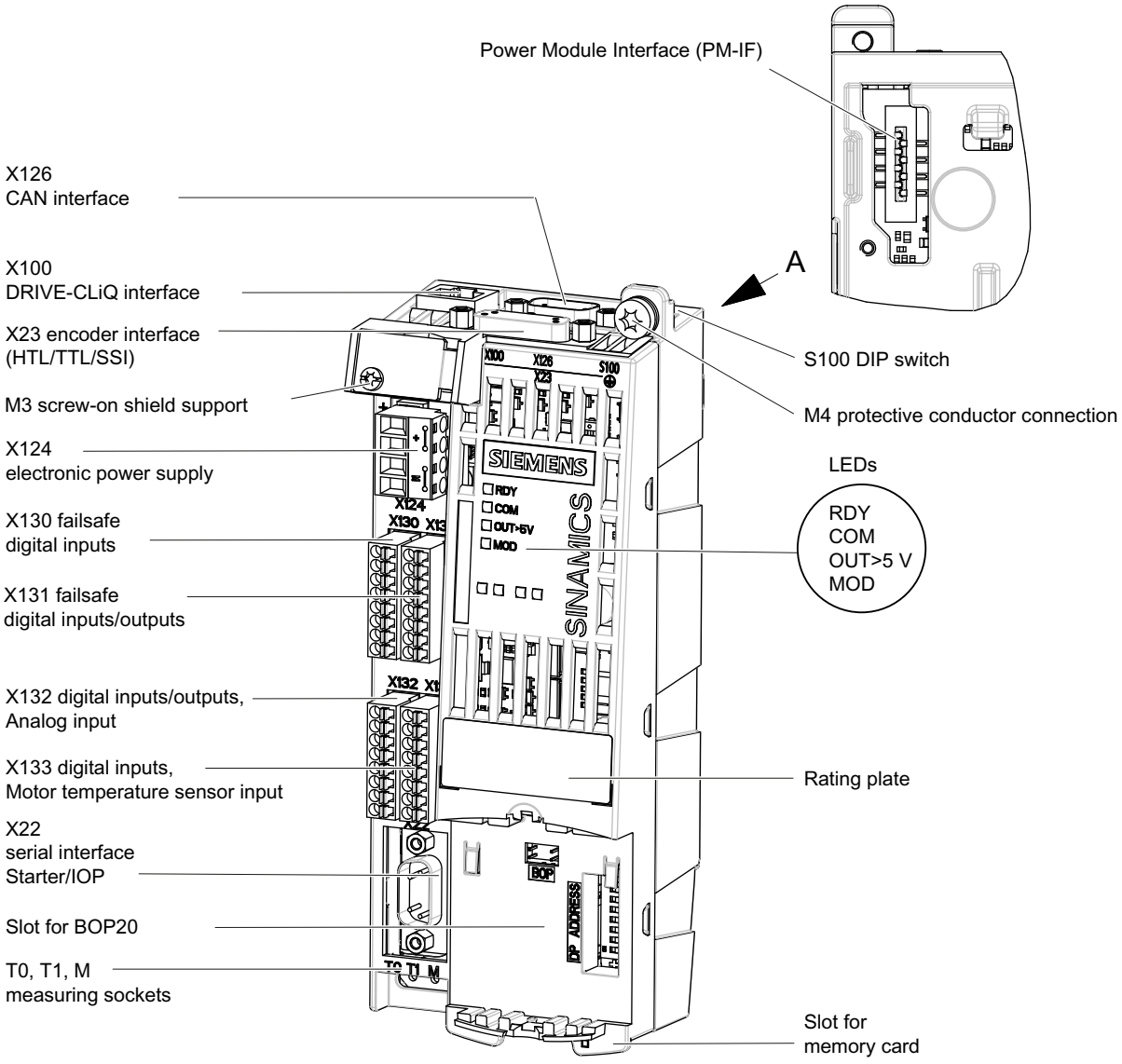

Figure 4-1 View of the CU305 CAN

The CU305 CAN uses 9-pin Sub D X126 connectors for the connection to the CAN bus system.

⚠ WARNING
Do NOT connect a PROFIBUS cable
Connecting a PROFIBUS cable to CAN connector X126 is highly likely to damage the CANopen interface of the CU305 beyond repair.

You can use the connectors as inputs or outputs. Unused pins are plated through.

The following baud rates (among others) are supported: 10, 20, 50, 125, 250, 500, 800 kBaud, and 1 Mbaud.

The PC with STARTER is connected to serial interface X22 (RS232).

4.1.4 CAN bus interface X126

Connector assignment of the CANopen interface X126 on S110

Table 4- 1 CAN bus interface X126

	Pin	Designation	Technical specifications
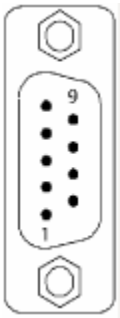	1	Reserved	
	2	CAN_L	CAN signal (dominant low)
	3	CAN_GND	CAN ground
	4	Reserved	
	5	CAN_SHLD	Optional shield
	6	CAN_GND	CAN ground
	7	CAN_H	CAN signal
	8	Reserved	
	9	Reserved	
Type: 9-pin SUB-D male			

4.1.5 CANopen functionality CU305 CAN

Introduction

The CU305 CAN supports the CANopen transfer types with SDOs (service data objects) and PDOs (process data objects).

The CU305 CAN also supports free PDO mapping.

The CU305 CAN supports CANopen communication profile DS 301 version 4.0, device profile DSP 402 (drives and motion control) version 2.0, and indicator profile DR303-3 version 1.0.

For communication monitoring purposes, the CU305 CAN supports node guarding and the heartbeat protocol (heartbeat producer).

The CU305 CAN features an SDO → parameter channel that can be used to read or write all the SINAMICS parameters.

The CU305 CAN firmware supports Profile Velocity Mode.

Node guarding

SINAMICS waits a certain time (node lifetime) for message frames from the master application and permits a specific number (lifetime factor) of failures within a specified time interval (node guard time).

The node lifetime is calculated by multiplying the node guard time by the lifetime factor.

Heartbeat protocol

SINAMICS (producer) cyclically transmits (heartbeat time) its communication status (sign of life) on the CAN bus to the master application.

Profile velocity mode

Velocity setpoint defaults and settings can be made in this mode.

4.1.6 Diagnostics LED "COM"

COM diagnostics LED → red

Table 4- 2 COM diagnostics LED → red (CANopen error LED)

ERROR LED flashing frequency	Status	Meaning
Off	No error	Ready
Single flash	Warning limit reached	At least one of the CAN controller error counters has reached the "Error Passive" warning threshold. (too many telegrams with errors).
Double flash	Error control event	A guard event has occurred.
On	Bus off	The CAN controller is in "Bus off".

COM diagnostics LED → green

Table 4- 3 COM diagnostics LED → green (CANopen RUN LED)

ERROR LED flashing frequency	Status	Meaning
Single flash	Stopped	The node is in the STOPPED state.
Flashing	PRE-OPERATIONAL	The node is in the PRE-OPERATIONAL state.
On	OPERATIONAL	The node is in the OPERATIONAL state.

4.2 Commissioning

4.2.1 Procedure when commissioning the drive for the first time

Section content

This section shows you how to carry out initial commissioning for the CANopen interface in the SINAMICS drive line-up using the STARTER commissioning tool. This section first looks at the main steps in the initial commissioning procedure. The initial commissioning procedure is performed by the STARTER commissioning tool in ONLINE mode. Where necessary, notes are provided at the end of each step to explain how the procedure differs in OFFLINE mode.

Prerequisite

Before following the commissioning steps described in this chapter, please ensure the points referred to in the "Requirements for commissioning" chapter have been addressed.

4.2.2 CANopen object directory

CANopen object directory

When the drive objects are initialized, the CANopen objects are initialized in the object directory for the SINAMICS drive line-up (CANopen slave software).

Objects

The following SINAMICS objects are involved in communication:

1. Control Unit communication objects independent of the drive
   - include: Number and number of errors, communication addresses etc.
2. Drive-dependent communication objects
   - Up to eight PDOs for sending and eight PDOs for receiving can be parameterized for the drive. Each PDO contains:

     - Communication and

     - Mapping parameters (max. 8 bytes/4 words/64 bits)
3. Manufacturer-specific objects
   - Objects for accessing SINAMICS parameters
   - Free objects for sending/receiving process data, there are freely interconnectable objects available for each drive object (max. 16) in the object directory (see CANopen manual for table).
   - The manufacturer-specific range starts in the object directory from address 2000 hex and ends at 5FFF hex.
4. Drive objects in drive profile DSP 402
   - Profile velocity mode
   - Setpoint and actual values and comparisons

4.2.3 Commissioning options

Prerequisites

You can find explanations of the CANopen terminology and other important technical principles in the Introduction chapter in the CANopen Manual.

Commissioning

This section describes the commissioning prerequisites:

- SINAMICS S110: CU305 CAN
- STARTER commissioning tool

Note

All CANopen parameters, errors and warnings are described in the List Manual.

SINAMICS S110 on a CANopen interface

There are two ways of putting SINAMICS S110 into operation with the STARTER tool on a CANopen interface.

- Via predefined message frames ("predefined connection set").
- Via free PDO mapping (user-defined message frames)

4.2.4 Configuring the drive unit with STARTER (overview)

Initial commissioning: procedure

In the table below, the current commissioning step is highlighted in **bold**:

Table 4- 4 CANopen initial commissioning

Step	Procedure
1	Hardware settings on the CU305
2	Configure the drive unit using the STARTER commissioning tool in ONLINE mode.
3	Configure the COB IDs and process data objects for the receive and transmit message frames.
4	Interconnect the receive and transmit buffers.
5	In ONLINE mode, download the project from the drive unit to the PG/PC and save.

Carrying out the commissioning step

Configure the drive unit in STARTER by carrying out the following steps:

- Search for the drive unit ONLINE.
- Enter the drive configuration data.
- Configure the motor.
- Configure the CANopen interface on the CU305 Control Unit
  - CAN interface
  - Monitoring
- Load the project to the drive unit.

4.2.5 Searching for the drive unit ONLINE

Introduction

The SINAMICS firmware is able to detect the connected drives automatically, as well as set and save the corresponding parameters.

Steps

To ensure that the drive unit configuration is identified automatically, open a new project in STARTER: Proceed as follows:

1. To call up the STARTER commissioning tool, click the STARTER icon or select menu command **Start > Programs > STARTER > STARTER** in the Windows Start menu. The STARTER Project Wizard is launched.
2. Select the **Find drive units online....** button.

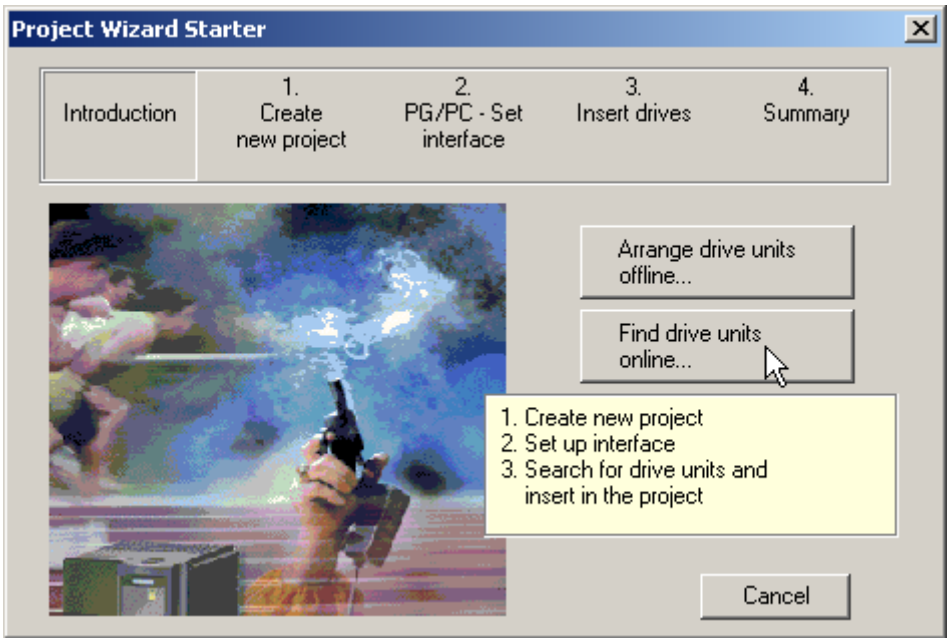

Figure 4-2 Find drive units online...

3. The Wizard guides you through the procedure for creating a new project. In the next dialog box, enter a name for the project, e.g. **Project_CANopen_0** and click **Continue >**.

4. The Project Wizard searches for the drive unit ONLINE and inserts it in the project. Click **Continue >**. The Wizard displays a summary of the project.
5. Choose **Complete**. The new project and drive unit are displayed in STARTER.

Note

STARTER searches for drive units (in this case, Control Units). This means more than one drive unit will be found if there is more than one Control Unit in the system. The peripherals associated with a drive unit (Control Unit, etc.) are not yet displayed at this point. They do not appear until **automatic configuration** is carried out.

4.2.6 Configuring a drive unit

Prerequisite

You have proceeded as described above and integrated the drive unit into the STARTER project automatically.

Note

This step is not required for connection via an SMI: The motor is configured automatically.

Steps

Proceed as follows to configure the CANopen interface, the motor, and the encoder for the drive.

Note

You only have to change the motor and encoder configuration;

1. Select **Disconnect from target system...**. The modified data is loaded from RAM to ROM and to the PG.
   The motors are configured in OFFLINE mode and are then loaded to the target system in ONLINE mode.

2. During first commissioning, double-click **Configure drive unit** in the project navigator (see the example screen below). Once first commissioning is complete, you will find the CANopen interface configuration under **Control Unit** → **Configuration** → **Wizard** button.

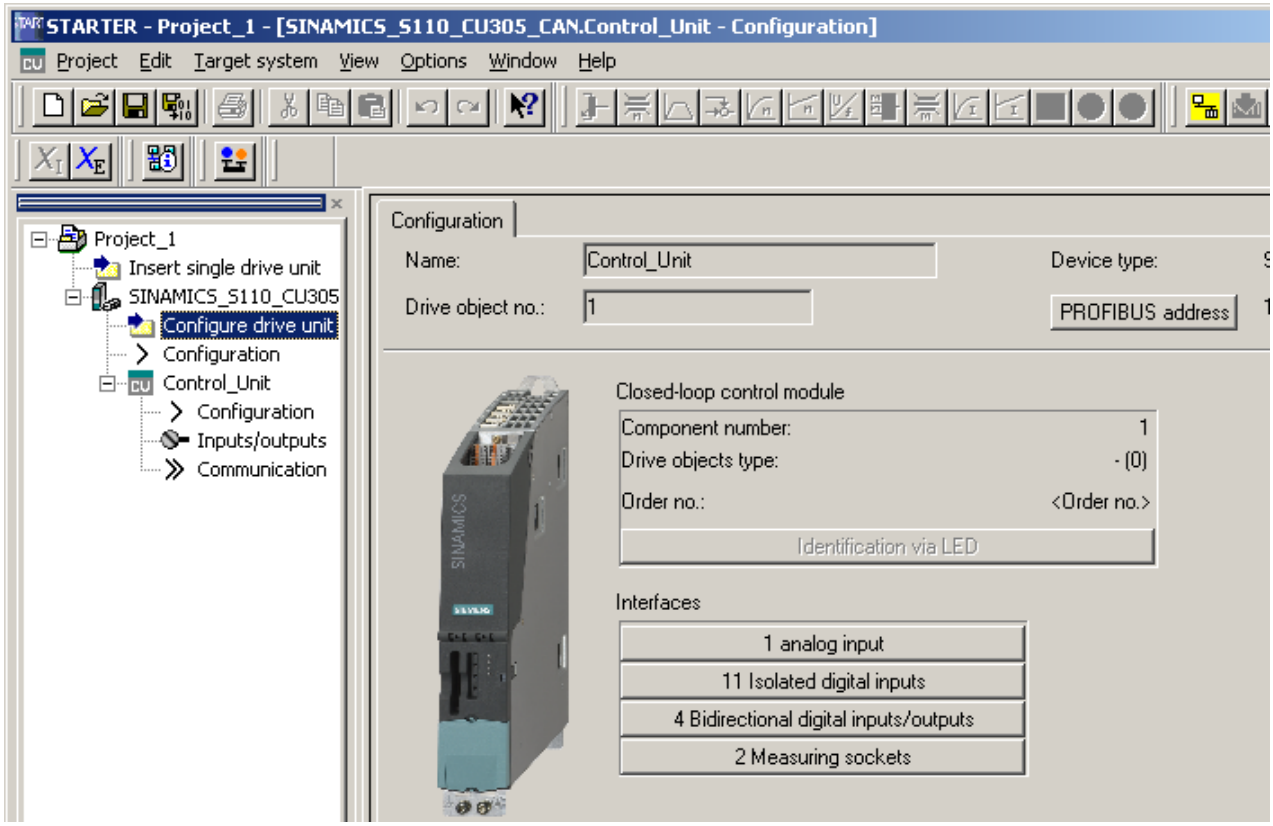

Figure 4-3 Configuring a drive

3. Enter the transmission rate and the CAN bus address (node ID) in the **Configuration - <Project name> - CAN interface** dialog box.

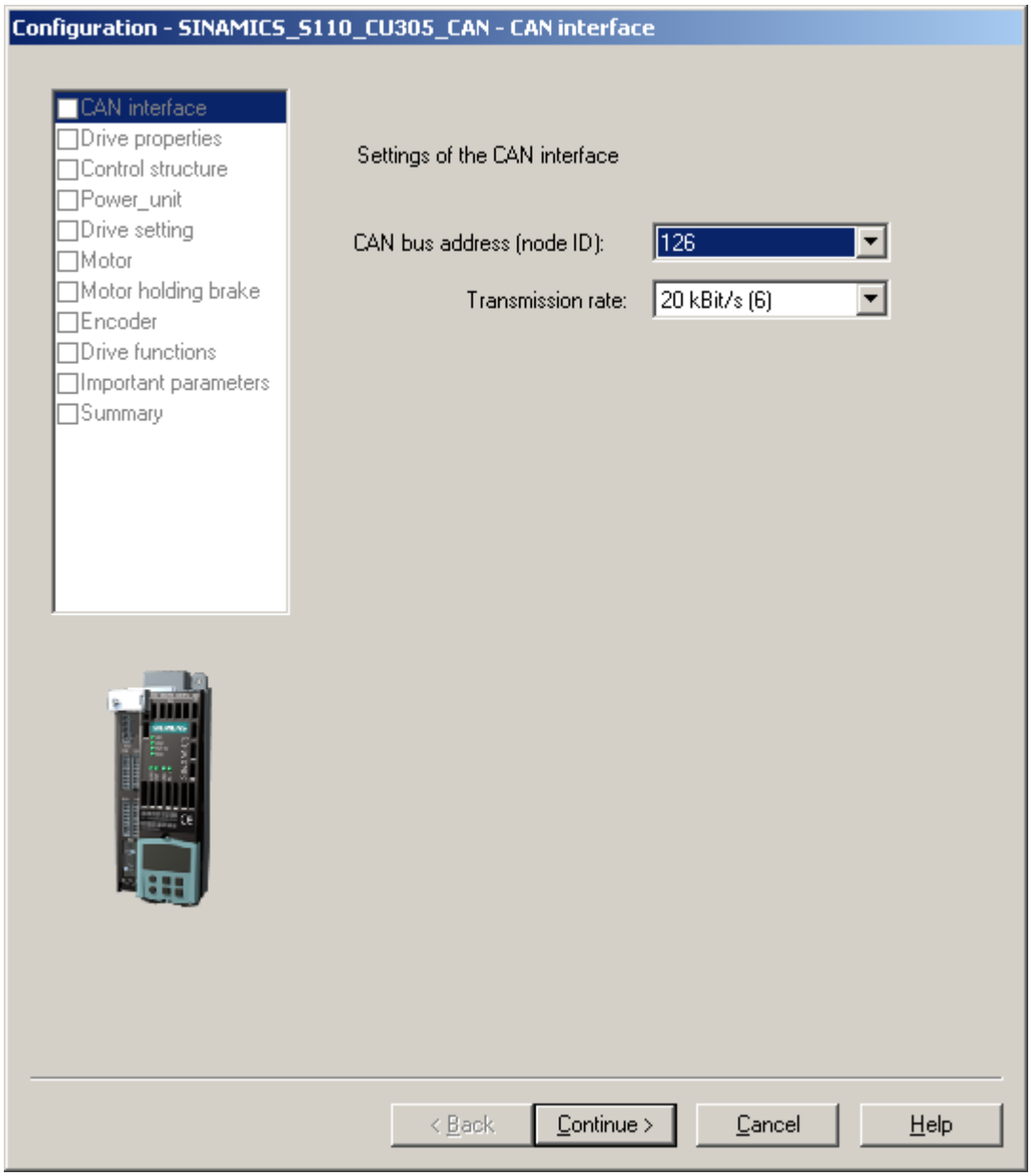

Figure 4-4 CAN interface

4. You can select a transmission rate of **1 MBit/s** for commissioning, for example. The factory setting is 20 kBit/s.

Note

If, during commissioning, you power down/power up the control or carry out a RESET, the factory settings will be restored.

5. There are two possible ways of setting the bus address/node ID:
   – In this dialog box, you can set a value between 1 and 126 if the address switch on the Control Unit (labeled "DP address") is set to 0 or 127.

     Note

     If the address switch is set to between 1 and 126, values that were entered here in OFFLINE mode will not be downloaded.

   – Directly using the address switch on the Control Unit.
     The following diagram shows an example for address **5**.

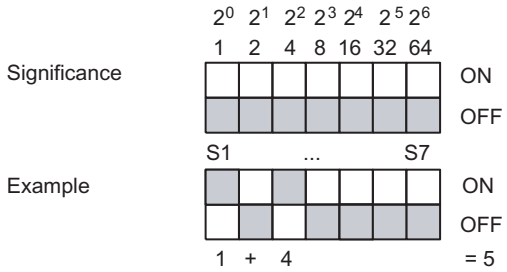

Figure 4-5 Example: Bus address via the address switch on the Control Unit

Compliance with the following instructions is mandatory!

Note

Permissible CAN bus address: 1...126.

The address set on the switch is displayed in **p8620.0**.

If the switch setting changes, the new setting will not be applied until the next POWER ON.

The factory setting is "ON" or "OFF" for all switches.

During SINAMICS power up the address switch is polled first in order that the bus address can be set. If the switch setting is 0 or 127, the address can be set via parameter **p8620.0**.

If the address is set to a valid node address (1...126), this is copied to parameter **p8620.0**, where it is displayed. Click **Next >**.

6. During first commissioning, you will need to enter a name for the drive in the **Drive properties** dialog box. Click **Next >**. Once first commissioning is complete, you will find the drive configuration under **Drive_1 → Configuration → Configure DDS** button.

7. On the dialog screen which appears when you select this command path ("SINAMICS_S110_CU305_CAN configuration - Control structure"), you can define whether the drive object (function module) is to operate with/without an extended setpoint channel. The commissioning procedure described here is carried out **without** an extended setpoint channel (ramp-function generator). The field for the extended setpoint channel must be clicked-out.

Note

When the ramp-function generator is activated (with setpoint channel), the interconnection from CI: p2151 = r1119 can be changed, so that to evaluate bit 10 in status word (r8784) the setpoint can be retrieved (taken) from in front of the ramp-function generator.

When the ramp-function generator is active, objects 6086 hex and 6083 hex of the drive provide are included.

8. You only configure the motor and the encoder! Work through the Wizard by choosing **Continue >** until you reach the point at which you configure the motor (see the following diagram).

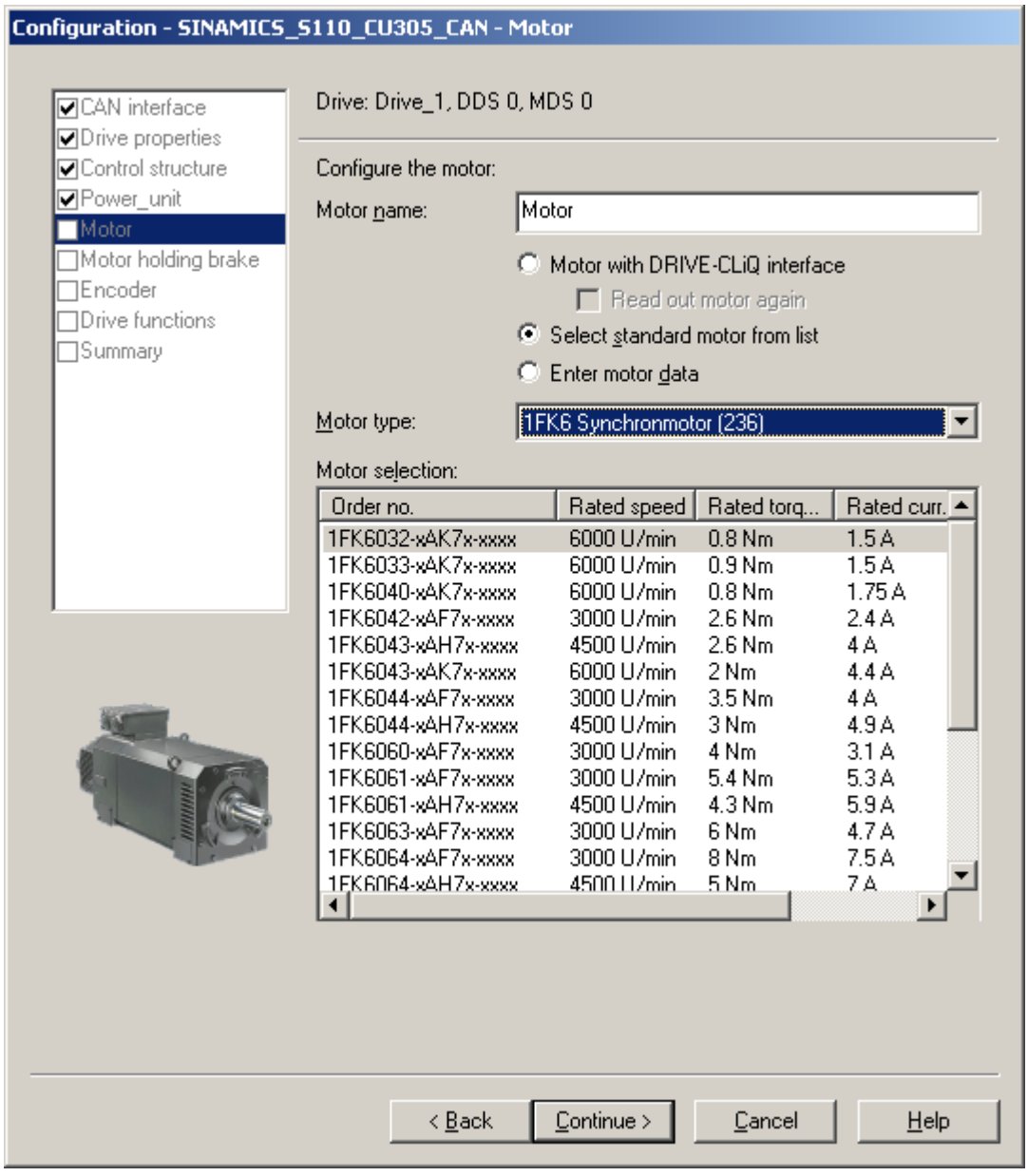

Figure 4-6 Configure the motor

9. Choose the motor type and the motor according to the type (order no.) (see the rating plate).
10. Click **Continue >** until you reach the point at which you configure the encoder.
11. Select the motor encoder and click **Next >** to run the wizard through to the dialog containing the summary.
12. Click **Complete**.

This completes the OFFLINE configuration of the drive unit.

4.2.7 Monitoring

Introduction

SINAMICS supports the following two optional monitoring services to ensure the functionality of CANopen network nodes:

- Heartbeat:
  SINAMICS (producer) cyclically transmits (heartbeat time) its communication status on the CAN bus to the master application.
- Node guarding:
  SINAMICS waits a certain time (node lifetime) for master frames from the master application and permits a specific number (lifetime factor) of failures within a specified time interval (node guard time).
  The node lifetime is calculated by multiplying the node guard time by the lifetime factor.

Note

Only one node monitoring service can be activated at any one time (either heartbeat or node guarding).

If both monitoring services are activated, node guarding is effective.

Steps

On the **Monitoring** tab, enter the required monitoring service (heartbeat or node guarding).

1. Select the **Monitoring** tab.
2. The default commissioning value for the **Heartbeat** monitoring mechanism could be, for example, **100 ms**. Enter this value (unless it has already been entered).
3. The default commissioning values for the **node guarding** monitoring service could be:
   - Time interval (guard time): **100 ms**
   - Number of failures (lifetime factor): **3**
     Enter these values (unless they have already been entered).

The CANopen interface is now parameterized. To load the project to the target system in ONLINE mode, carry out the following steps.

Note

Parameter **p8609** determines how the drive or CAN node will respond in the event of a CAN communication or device error.

Factory setting:

p8609 = 1, => no change

Parameter p8609

Sets the behavior of the CAN node referred to the communications error or equipment fault.

- Values:
  - 0: Pre-operational
  - 1: No change
  - 2: Stopped
- Index (corresponds to the CANopen object 1029 hex):
  - [0] = Behavior for communication errors
  - [1] = Behavior for device faults

4.2.8 Loading the project to the drive unit

Introduction

To load the project to the drive unit, proceed as follows:

Steps

1. Click **Connect to target system**. An ONLINE connection is established and an ONLINE/OFFLINE comparison takes place. If any discrepancies are identified, they are displayed (see screenshot below).

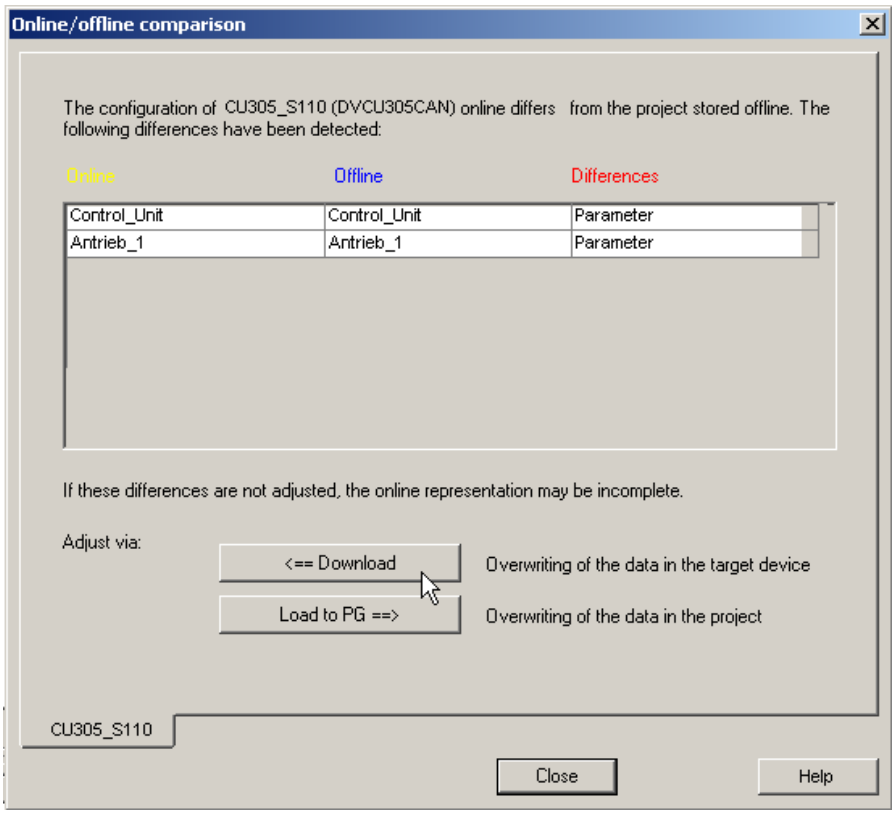

Figure 4-7 ONLINE/OFFLINE comparison (example)

2. You changed the data OFFLINE and now have to load it to the target system. Carry out the following:
   - **<== Download to target device** in the "ONLINE/OFFLINE comparison" dialog box
   - When the system asks "Are you sure?", click **Yes**. The system now starts loading the data.
   - When the system informs you that the data was successfully loaded to the target system, click **OK**.
   - Click **OK** for "Load from RAM to ROM".

3. Discrepancies were identified again during the ONLINE/OFFLINE comparison. Now click **Load to programming device ==>**.
4. Load the new data from the drive unit to the PG. Carry out the following:
   - When the system asks "Are you sure?", click **Yes**. The system now starts loading the data.
   - When the system informs you that the data was successfully loaded to the PG, click **OK**.
5. There are no more discrepancies in the ONLINE/OFFLINE comparison dialog box. Click **Close**.

This completes the procedure for configuring the drive unit hardware with the CANopen interface.

4.3 Configuring COB-IDs and process data objects

4.3.1 Configuring COB-IDs and process data

Configuring COB-IDs and process data

For more information about this subject please see the CANopen Commissioning Manual (COB-IDS and process data objects associated with receive and transmit telegrams).

4.4 Interconnecting process data

4.4.1 Interconnecting process data

Interconnecting process data

For more information about this subject please see the chapter titled Interconnecting process data in the receive and send buffers in the CANopen Commissioning Manual.

4.5 Loading and managing projects ONLINE

4.5.1 In ONLINE mode, load the projects from the drive unit to the PC/PG and save.

Prerequisite

You are in ONLINE mode in STARTER and have completed the initial commissioning procedure.

Steps

To save the data configured ONLINE in STARTER on the PG/PC, proceed as follows:

1. Select the drive unit in the project navigator. Select **Target device → Load to programming device** from the shortcut menu (right-click to open).
2. Carry out the following:
   - When the system asks "Are you sure?", click **Yes**. The system now starts loading the data.
   - When the system informs you that the data was successfully loaded, click **OK**.
3. Click the **Disconnect from target system** function key.
4. If prompts are displayed, then click on the following one after the other:
   - **Changes in the drive unit...**
   - **Save data**, for SERVO_1
   - When the system informs you that the data was successfully copied from RAM to ROM, click **OK**.
   - When the system prompts you to confirm that you want the data to be loaded to the PG, click **Yes**.
   - When the system informs you that the data was successfully loaded to the PG, click **OK**.
5. STARTER is now in OFFLINE mode.
6. Click **Project → Save as...**.

This completes initial commissioning for the CANopen interface.

Diagnostics 5

This chapter describes the following diagnostic features of the SINAMICS S drive system:

- Diagnostics via LEDs
- Diagnostics via STARTER
- Diagnostic buffer
- Fault and alarm messages

5.1 Diagnostics via LEDs

5.1.1 LEDs when the Control Unit is booted

The individual statuses during the booting procedure are indicated by means of the LEDs on the Control Unit.

- The duration of the individual statuses varies.
- If an error occurs, booting is aborted and the cause of the error is indicated via the LEDs.
  Remedy:
  - If booting is cancelled due to incorrect data, fault F01018 is output. After this fault has been output, the module is booted based on factory settings.
  - In all other cases: Exchange the Control Unit.
- Once the unit has been successfully booted, all the LEDs are switched off briefly.
- Once the unit has been booted, the LEDs are driven via the loaded software.

  The description of the LEDs after booting applies.

Control Unit 305 - behavior of the LEDs during booting

Table 5- 1 LEDs during power up

LED				Status	Remark
RDY	COM	OUT>5	MOD		
Orange	Orange	Off	Red	Reset	–
Red	Red	Off	Off	BIOS loaded	–
Red 2 Hz	Red	Off	Off	BIOS error	–
Red	Off	Off	Off	Firmware loaded	–
Red 2 Hz	Red 2 Hz	Off	Off	File error	problem with file system
Off	Red	Off	Off	Firmware checked	no CRC errors
Red 0.5 Hz	Red 0.5 Hz	Off	Off	Firmware checked	CRC error
Orange	Off	Off	Off	drive initialization	–

5.1.2 LEDs after the Control Unit CU305 has booted

Table 5- 2 Control Unit CU305 – description of the LEDs after booting

LED	Color	Status	Description, cause	Remedy
RDY (READY)	-	off	Electronics power supply is missing or outside permissible tolerance range.	-
	Green	Continuous	The component is ready and cyclic DRIVE-CLiQ communication takes place or the Control Unit waits for initial commissioning.	-
		Flashing 2 Hz	Writing to the memory card[1)]	-
		Flashing 0.5 Hz	Commissioning/Reset or Safety commissioning/Reset	-
	Red	Flashing 2 Hz	At least one fault is present in this component.	Remedy and acknowledge fault
	Green/ Red	Flashing 0.5 Hz	Control Unit CU305 is ready for operation. However there are no software licenses.	Obtain licenses.
	Green/ orange or red/ orange	Flashing 1 Hz	Component detection via LED is activated (p0124[0]). **Note:** Both options depend on the LED status when component recognition is activated via p0124[0] = 1.	-
COM PROFIdrive cyclic operation/ CU305 DP	-	off	Cyclic communication has not (yet) taken place. **Note:** The PROFIdrive is ready to communicate when the Control Unit is ready to operate (see LED RDY).	-
	Green	Continuous	Cyclic communication is taking place.	-
		Flashing 0.5 Hz	Cyclic communication is not yet running fully. Possible reasons: • The controller is not transferring any setpoints. • During isochronous operation, no global control (GC) or a faulty global control (GC) is transferred by the controller.	-
	Red	Continuous	Cyclic communication has been interrupted.	Remedy fault
	Orange	Flashing 2 Hz	Firmware CRC error.	Make sure that the memory card has been inserted properly. [1)] Replace the memory card. [1)] Replace Control Unit. Carry-out a POWER ON.
COM/ CU305 CAN	-	off	Cyclic communication has not (yet) taken place. **Note:** The CAN is ready to communicate when the Control Unit is ready to operate (see LED RDY).	-
	Green	Continuous	Cyclic communication is taking place.	-

LED	Color	Status	Description, cause	Remedy
		Flashing 0.5 Hz	Cyclic communication is not yet running fully. Possible reasons: • The controller is not transferring any setpoints. • During isochronous operation, no global control (GC) or a faulty global control (GC) is transferred by the controller.	-
	Red	Continuous	Cyclic communication has been interrupted.	Remedy fault
	Orange	Flashing 2 Hz	Firmware CRC error.	Make sure that the memory card has been inserted properly. [1)] Replace the memory card. [1)] Replace Control Unit. Carry-out a POWER ON.
OUT>5 V	-	off	The voltage of the electronics power supply for the measuring system is 5 V.	-
	Orange	Continuous	The voltage of the electronics power supply for the measuring system is 24 V. **Important:** Make sure that the connected encoder can be operated with a 24 V power supply. If an encoder that is designed for a 5 V supply is operated with a 24 V supply, this can destroy the encoder electronics.	-
MOD	-	off	Reserved	-
[1)] This option is only valid if an optional memory card is inserted.				

5.1.3 Sensor Module Cabinet SMC10 / SMC20

Table 5- 3 Sensor Module Cabinet 10 / 20 (SMC10 / SMC20) – description of the LEDs

LED	Color	Status	Description, cause	Remedy
RDY READY	-	off	Electronics power supply is missing or outside permissible tolerance range.	–
	Green	Continuous	The component is ready for operation and cyclic DRIVE-CLiQ communication is taking place.	–
	Orange	Continuous	DRIVE-CLiQ communication is being established.	–
	Red	Continuous	At least one fault is present in this component. **Note:** LED is driven irrespective of the corresponding messages being reconfigured.	Remedy and acknowledge fault
	Green/red	0.5 Hz flashing light	Firmware is being downloaded.	–
		2 Hz flashing light	Firmware download is complete. Wait for POWER ON	Carry out a POWER ON
	Green/orange or Red/orange	Flashing light	Component recognition via LED is activated (p0144) **Note:** Both options depend on the LED status when component recognition is activated via p0144 = 1.	–

5.1.4 Meaning of LEDs on the Sensor Module Cabinet-Mounted SMC30

Table 5- 4 Meaning of LEDs on the Sensor Module Cabinet SMC30

LED	Color	Status	Description, cause	Remedy
RDY READY	-	Off	Electronics power supply is missing or outside permissible tolerance range.	–
	Green	Continuous light	The component is ready for operation and cyclic DRIVE-CLiQ communication is taking place.	–
	Orange	Continuous light	DRIVE-CLiQ communication is being established.	–
	Red	Continuous light	At least one fault is present in this component. **Note:** The LED is activated regardless of whether the corresponding messages have been reconfigured.	Remedy and acknowledge fault
	Green/red	Flashing 0.5 Hz	Firmware is being downloaded.	–
	Green/red	Flashing 2 Hz	Firmware download is complete. Wait for POWER ON.	Carry out a POWER ON
	Green/orange or Red/orange	Flashing light	Component recognition via LED is activated (p0144). **Note:** Both options depend on the LED status when component recognition is activated via p0144 = 1.	–
OUT > 5 V	-	Off	Electronics power supply is missing or outside permissible tolerance range. Power supply ≤ 5 V.	–
	Orange	Continuous light	Electronics power supply for encoder system available. Power supply > 5 V. **Important:** Make sure that the connected encoder can be operated with a 24 V power supply. If an encoder that is designed for a 5 V supply is operated with a 24 V supply, this can destroy the encoder electronics.	–

5.2 Diagnostics via STARTER

The diagnostic functions support commissioning and service personnel during commissioning, troubleshooting, diagnostics and service activities.

Prerequisite

- Online operation of STARTER.

Diagnostic functions

The following diagnostic functions are available in STARTER:

- Specifying signals with the ramp-function generator
- Signal recording with the trace function
- Analyzing the control response with the measuring function
- Outputting voltage signals for external measuring devices via test sockets

5.2.1 Function generator

Description

The function generator is used, for example, for the following tasks:

- To measure and optimize control loops.
- To compare the dynamic response of coupled drives.
- To specify a simple traversing profile without a traversing program.

Use the function generator to generate different signal shapes.

In the connector output operating mode (r4818), the output signal can be injected into the control loop via the BICO interconnection.

Depending on the mode set, this setpoint can also be applied to the control structure as, for example, a current setpoint, disturbing torque, or speed setpoint. The impact of superimposed control loops is automatically suppressed.

Parameterizing and operating the ramp-function generator

Use the STARTER commissioning tool to parameterize and operate the function generator.

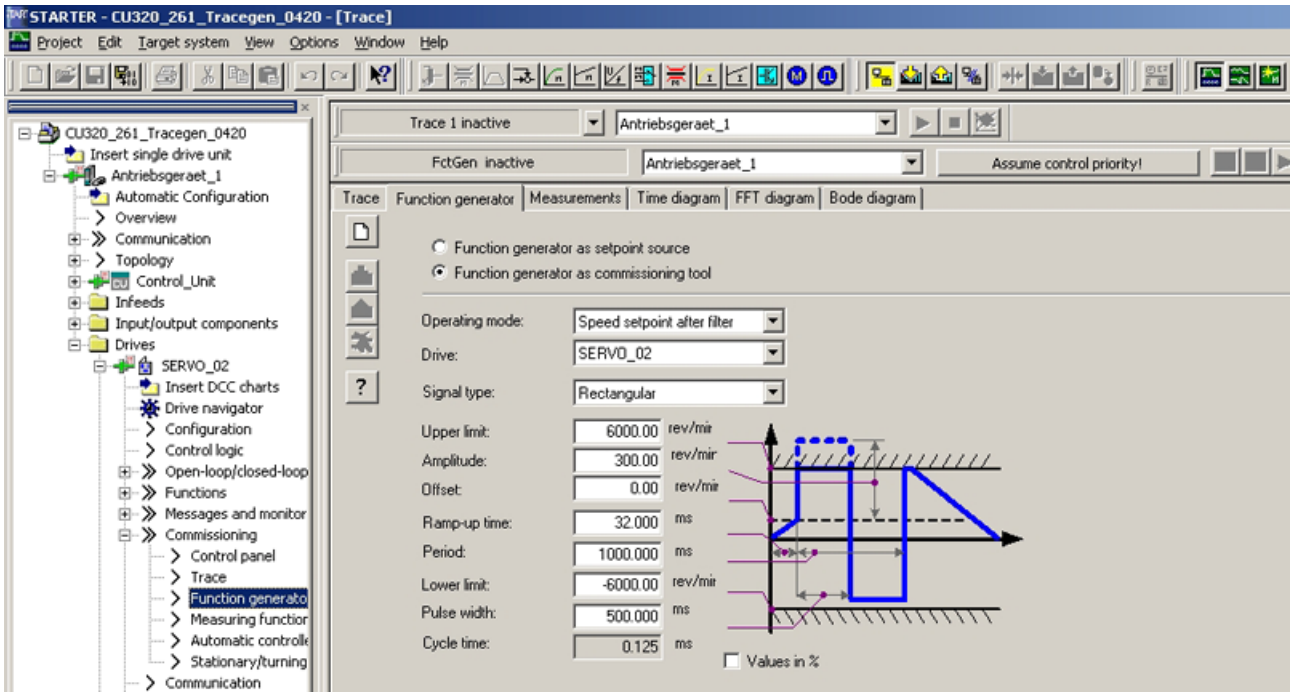

Figure 5-1 "Ramp-function generator" initial screen

Note

Please see the online help for more information on parameterization and operation.

Properties

- Concurrent injection to several drives possible.
- The following parameterizable signal shapes can be set:
  - Square-wave
  - Staircase
  - Triangular
  - PRBS (pseudo random binary signal, white noise)
  - Sinusoidal
- An offset is possible for each signal. The ramp-up to the offset is parameterizable. Signal generation begins after the ramp-up to the offset.

- Restriction of the output signal to the minimum and maximum value settable.
- Operating modes of the function generator
  - Connector output
  - Current setpoint downstream of filter (current setpoint filter)
  - Disturbing torque (downstream of current setpoint filter)
  - Speed setpoint downstream of filter (speed setpoint filter)
  - Current setpoint upstream of filter (current setpoint filter)
  - Speed setpoint upstream of filter (speed setpoint filter)

Injection points of the ramp-function generator

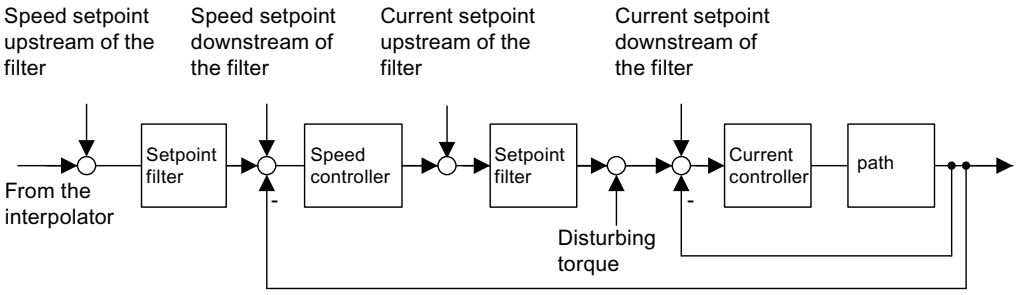

Figure 5-2 Injection points of the ramp-function generator

Further signal shapes

Further signal shapes can be parameterized.

Example:

The "triangular" signal form can be parameterized with "upper limitation" to produce a triangle with no peak.

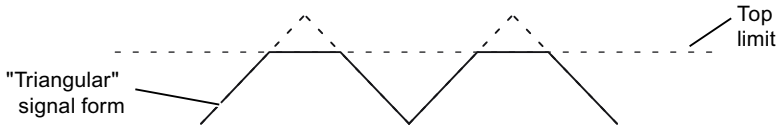

Figure 5-3 "Triangular" signal without peak

Starting/stopping the ramp-function generator

Note

If you parameterize the function generator in a certain way (e.g. offset), the motor will be able to "drift" and travel to the end stop.

The movement of the drive is not monitored while the ramp-function generator is active.

To start the ramp-function generator:

1. Set the requirements for starting the function generator:
   - Activate the control panel:

     Drive_1 → Commissioning → Control panel
   - Switch on the drive:

     Control board → Issue enable signals → Switch on
2. Select the operating mode:

   e.g. speed setpoint downstream of filter
3. Set the signal shape:

   e.g. square-wave
4. Download the settings to the target device ("Download parameterization" button).
5. Start the function generator ("Start FctGen" button).

To stop the measuring function:

- "Stop FctGen" button

Parameterization

Select the "function generator" parameter screen via the following icon in the toolbar of the STARTER commissioning tool:

Figure 5-4 STARTER icon for "trace function/ramp-function generator"

5.2.2 Trace function

Description

You can use the trace function to record measured values over a defined period, depending on trigger conditions.

Call to the trace function

The "Trace" parameter screen is selected via the following icon in the toolbar of the STARTER commissioning tool.

Figure 5-5 STARTER icon for "trace/function generator"

Parameterizing and using the trace function

Use the STARTER commissioning tool to parameterize and operate the trace function.

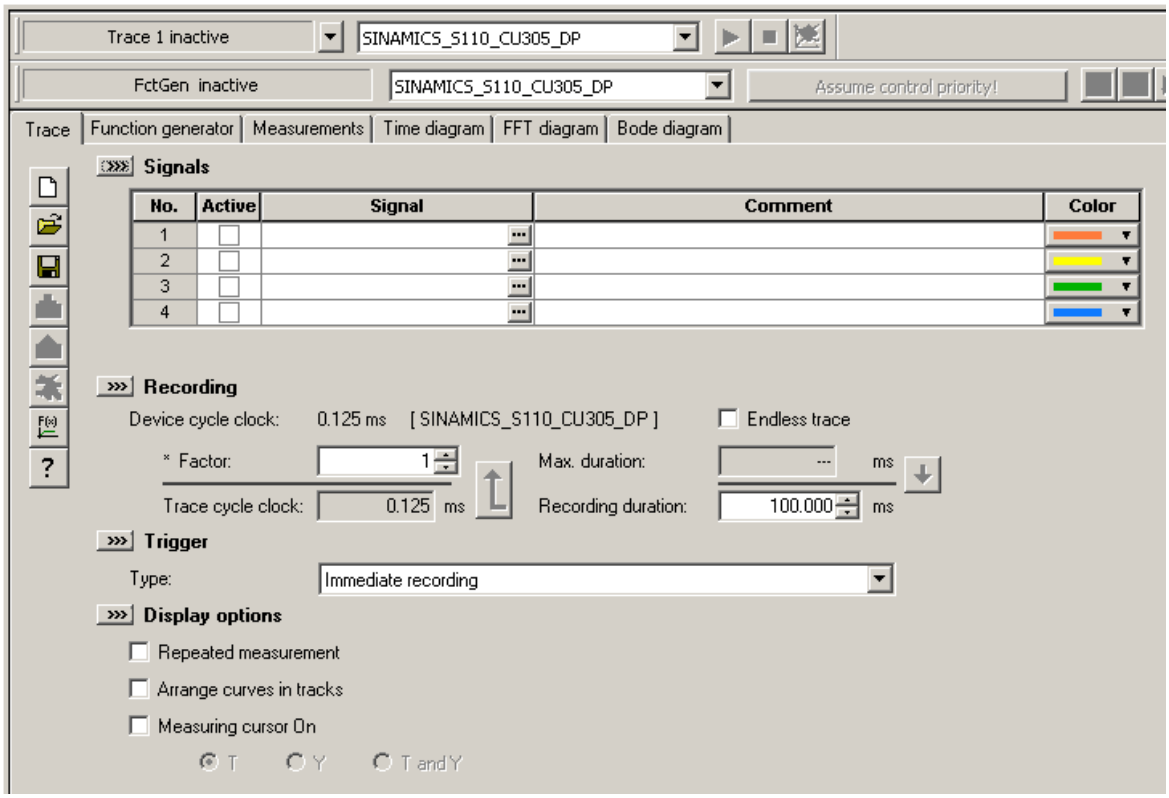

Figure 5-6 Trace function

The unit cycle time display flashes 3 times at around 1 Hz when the time slice is changed from < 4 ms to ≥ 4 ms (see description under "Properties").

Note

Please see the online help for more information about parameterizing and operation.

Properties

- Up to 4 recording channels per trace.
- Device cycle for individual trace: 0.25 ms
- Two independent trace recorders per Control Unit
  - Endless trace:
    Activate **Ring buffer** to define the recording length more precisely. If the ring buffer is deactivated, the trace records until the available memory space is filled.
  - Device cycle for endless trace: 2 ms
- Trigger:
  - Without triggering (recording immediately after start)
  - Triggering on signal with edge or on level
  - Trigger delay and pretrigger possible
- STARTER parameterization and commissioning tool
  - Automatic or adjustable scaling of display axes
  - Signal measurement via cursor
- Settable trace cycle: Integer multiples of the basic sampling time
  - Averaging of trace values:
    If a float value is recorded with a cycle which is slower than the device cycle, the values recorded will not be averaged.

5.2.3 Measuring function

Description

The measuring function is used for optimizing the drive controller. By parameterizing the measuring function, the impact of superimposed control loops can be suppressed selectively and the dynamic response of the individual drives analyzed. The ramp-function generator and trace function are linked for this purpose. The control loop is supplied with the ramp-function generator signal at a given point (e.g. speed setpoint) and recorded by the trace function at another (e.g. speed actual value). The trace function is parameterized automatically when the measuring function is parameterized. Specific predefined operating modes for the trace function are used for this purpose.

Parameterizing and using the measuring function

The measuring function is parameterized and operated via the STARTER commissioning tool.

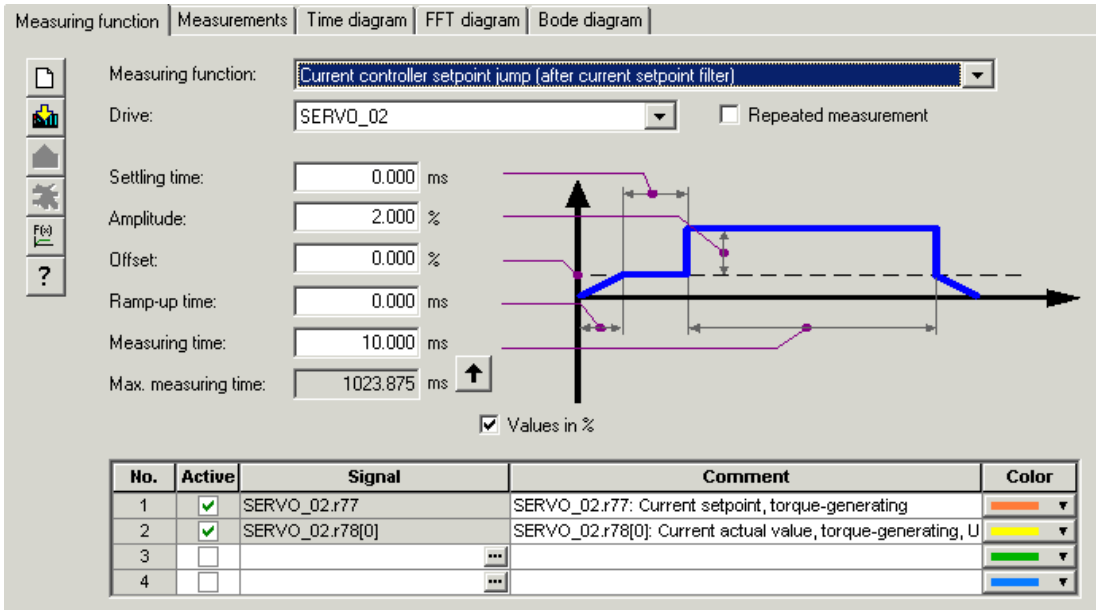

Figure 5-7 "Measuring function" initial screen

Note

Please see the online help for more information about parameterizing and operation.

Properties

- Measuring functions
  - Current controller setpoint change (downstream of the current setpoint filter)
  - Current controller reference frequency response (downstream of the current setpoint filter)
  - Speed controller setpoint change (downstream of the speed setpoint filter)
  - Speed controller disturbance step change (fault downstream of the current setpoint filter)
  - Speed controller reference frequency response (downstream of the speed setpoint filter)
  - Speed controller reference frequency response (upstream of the speed setpoint filter)
  - Speed controller interference frequency response (fault downstream of the current setpoint filter)
  - Speed controller path (excitation downstream of current setpoint filter)

Starting/stopping the measuring function

⚠ CAUTION
With the corresponding measuring function parameter settings (e.g. offset), the motor can "drift" and travel to its end stop. The movement of the drive is not monitored while the measuring function is active.

To start the measuring function:

1. Ensure that the prerequisites for starting the measuring function are fulfilled.
   - Activate the control panel.

     Drive_1 → Commissioning → Control panel
   - Switch on the drive.

     Control board → Issue enable signals → Switch on
2. Select the drive (as control panel).
3. Set the measuring function.

   e.g. current controller setpoint change
4. Load the settings to the target system ("Download parameterization" button).
5. Start the ramp-function generator ("Start measuring function" button)

To stop the measuring function:

- "Stop measuring function" button

Parameterization

The "Measurement function" parameter screen is selected via the following icon in the toolbar of the STARTER commissioning tool.

Figure 5-8 STARTER icon for "Measuring function"

5.2.4 Measuring sockets

Description

The measuring sockets are used to output analog signals. Any interconnectable signal can be output to any measuring socket on the Control Unit.

CAUTION
The measuring sockets should be used for commissioning and servicing purposes only. The measurements may only be carried out by properly trained specialist personnel.

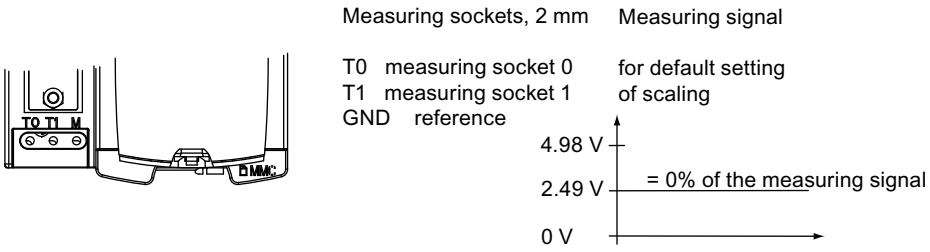

Figure 5-9 Arrangement of the measuring sockets on the Control Unit CU305

Parameterizing and using the measuring sockets

The measuring sockets are parameterized and operated via the STARTER commissioning tool.

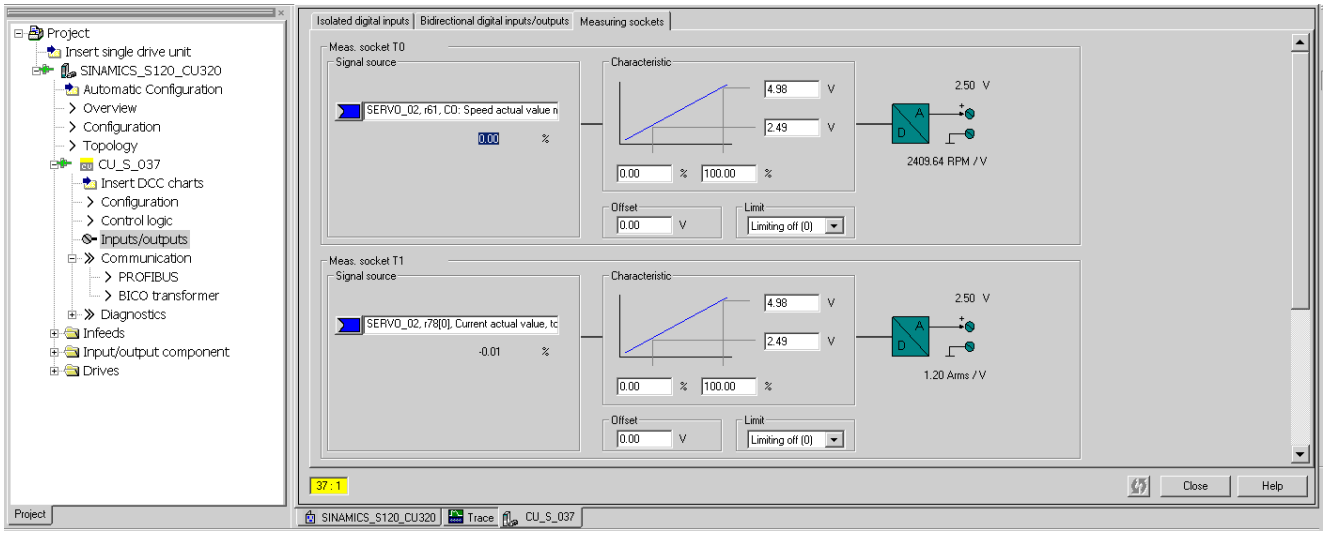

Figure 5-10 "Measuring sockets" initial screen

In the STARTER commissioning tool, select the parameter screen "Measuring sockets" in the project tree under the **CU** in the entry **inputs/outputs** in the tab **Measuring sockets**.

Note

Please see the online help for more information about parameterizing and operation.

Properties

- Resolution: 8-bit
- Voltage range: 0 V to +4.98 V
- Measuring cycle: Depends on the measuring signal (e.g. actual speed value in speed controller cycle 250 µs)

Short-circuit-proof
Parameterizable scaling
Adjustable offset
Adjustable limitation

Signal chart for measuring sockets

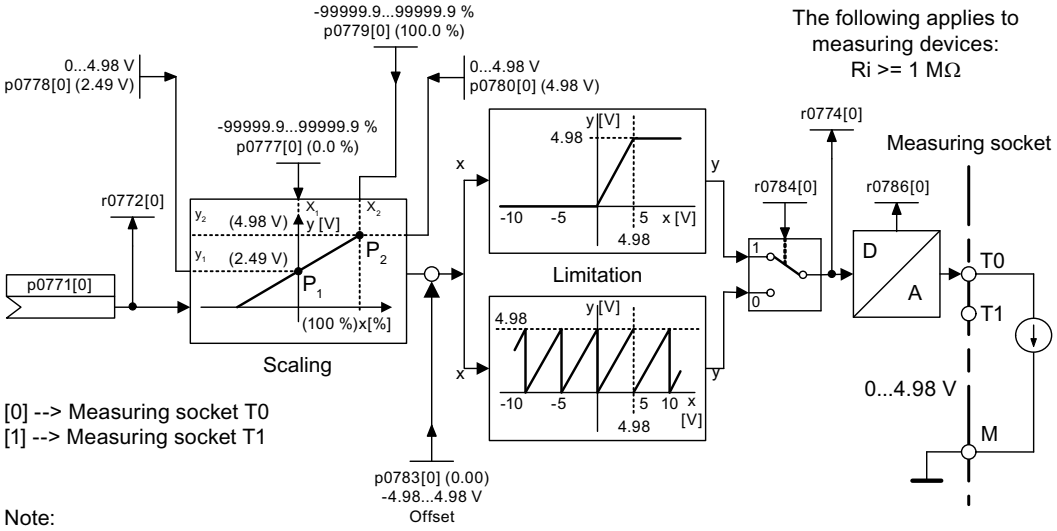

Figure 5-11 Signal chart for measuring sockets

Which signal can be output via measuring sockets?

The signal to be output via a measuring socket is specified by parameterizing the connector input p0771[0...1].

Important measuring signals (examples):

r0060	CO: Speed setpoint before speed setpoint filter
r0063	CO: Actual speed value
r0069[0...2]	CO: Phase currents actual value
r0075	CO: Field-generating current setpoint
r0076	CO: Field-generating actual current
r0077	CO: Torque-generating current setpoint
r0078	CO: Torque-generating actual current

Scaling

Scaling specifies how the measuring signal is processed. A straight line with 2 points must be defined for this purpose.

Example:

x1 / y1 = 0.0% / 2.49 V x2 / y2 = 100.0% / 4.98 V (default setting)

– 0.0% is mapped onto 2.49 V

– 100.0% is mapped onto 0.00 V

Offset

The offset is applied additively to the signal to be output. The signal to be output can thus be displayed within the measuring range.

Limitation

- Limitation On

  If signals are output outside the permissible measuring range, the signal is limited to 4.98 V or to 0V.

- Limitation off

  The output of signals outside the permissible measuring range causes a signal overflow. In the event of an overflow, the signal jumps from 0 V to 4.98 V or from 4.98 to 0 V.

Example of a measurement

Assumption:

The actual speed (r0063) is to be output for a drive via measuring socket T1.

How do you do it?

1. Connect and set the measuring device.
2. Interconnect the signal (e.g. STARTER).

   Interconnect the connector input (CI) belonging to the measuring socket with the desired connector output (CO).

   CI: p0771[1] = CO: r0063
3. Parameterize the signal characteristic (scaling, offset, limitation).

Function diagrams (see SINAMICS S110 List Manual)

- 8134 measuring sockets

Overview of important parameters (see SINAMICS S110 List Manual)

Adjustable parameters

- p0771[0...1] CI: Measuring sockets signal source
- p0777[0...1] Measuring sockets characteristic value x1
- P0778[0...1] Measuring sockets characteristic value y1
- p0779[0...1] Measuring sockets characteristic value x2
- p0780[0...1] Measuring sockets characteristic value y2
- p0783[0...1] Measuring sockets offset
- p0784[0...1] Measuring sockets limit on/off

Display parameters

- r0772[0...1] Measuring sockets output signal
- r0774[0...1] Measuring sockets output voltage
- r0786[0...1] Measuring sockets normalization per volt

5.3 Fault and alarm messages

5.3.1 General information about faults and alarms

Description

The errors and states detected by the individual components of the drive system are indicated by messages.

The messages are categorized into faults and alarms.

Note

The individual faults and alarms are described in the SINAMICS S110 List Manual in the section titled "Faults and Alarms". Here you can also find a chapter titled "Function diagrams" → "Faults and alarms", which contains function diagrams for the fault buffer, alarm buffer, fault trigger, and fault configuration.

Properties of faults and alarms

- Faults
  - Are identified by Fxxxxx.
  - Can lead to a fault reaction.
  - Must be acknowledged once the cause has been remedied.
  - Status via Control Unit and LED RDY.
  - Status via PROFIBUS status signal ZSW1.3 (fault active).
  - Entry in the fault buffer.
- Alarms
  - Are identified by Axxxxx.
  - Have no further effect on the drive.
  - The alarms are automatically reset once the cause has been remedied. No acknowledgment is required.
  - Status via PROFIBUS status signal ZSW1.7 (alarm active).
  - Entry in the alarm buffer.

- General properties of faults and alarms
  - Can be configured (e.g. change fault to alarm, fault reaction).
  - Triggering on selected messages possible.
  - Initiation of messages possible via an external signal.
  - Contain the component number for identifying the affected SINAMICS component
  - Contain diagnostic information on the relevant message

Acknowledgment of faults

The list of faults and alarms specifies how each fault is acknowledged after the cause has been remedied.

1. Acknowledgment of faults by "POWER ON"
   - Switch the drive on/off (POWER ON)
2. Acknowledgment of faults by "IMMEDIATE"
   - Via PROFIBUS control signal

     STW1.7 (reset fault memory): 0/1 edge

     Set STW1.0 (ON/OFF1) = "0" and "1"
   - Via external input signal

     Binector input and interconnection with digital input

     p2103 = "Requested signal source"

     Across all of the drive objects (DO) of a Control Unit

     p2102 = "Requested signal source"
3. Acknowledge faults with "PULSE INHIBIT"
   - The fault can only be acknowledged with a pulse inhibit (r0899.11 = 0).
   - The same possibilities are available for acknowledging as described under acknowledge IMMEDIATELY.

Note

The drive cannot resume operation until all active faults have been acknowledged.

5.3.2 Buffer for faults and alarms

Note

The contents of the fault buffer are saved to non-volatile memory when the Control Unit is powered down, i.e. the fault buffer history is still available when the unit is powered up again.

NOTICE
The entry in the fault/alarm buffer is made after a delay. For this reason, the fault/alarm buffer should not be read until a change in the buffer is also recognized (r0944, r2121) after "Fault active"/"Alarm active" is output.

Fault buffer

Faults which occur are entered in the fault buffer as follows:

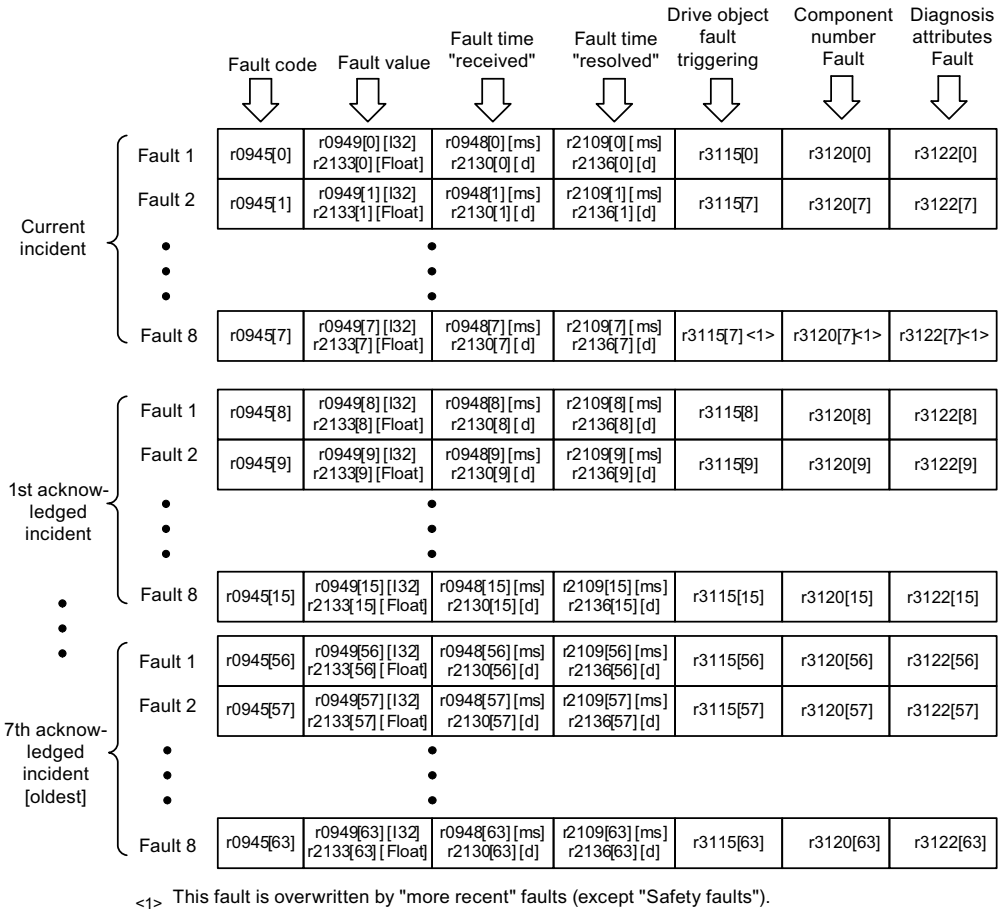

Figure 5-12 Structure of the fault buffer

Properties of the fault buffer:

- A new fault incident encompasses one or more faults and is entered in "Current fault incident".
- The entries appear in the buffer according to the time at which they occurred.
- If a new fault incident occurs, the fault buffer is reorganized. The history is recorded in "Acknowledged fault incident" 1 to 7.
- If the cause of at least one fault in "Current fault incident" is remedied and acknowledged, the fault buffer is reorganized. Faults that have not been remedied remain in "Current fault incident".
- If "Current fault incident" contains eight faults and a new fault occurs, the fault in the parameters in index 7 is overwritten by the new fault.
- r0944 is incremented each time the fault buffer changes.
- A fault value (r0949) can be output for a fault. The fault value is used to diagnose the fault more accurately; please refer to the fault description for details of the meaning.

Clearing the fault buffer

- The fault buffer is reset as follows: p0952 = 0

Alarm buffer, alarm history

The alarm buffer comprises the alarm code, the alarm value and the alarm time (received, resolved). The alarm history occupies the last indices ([8...63]) of the parameter.

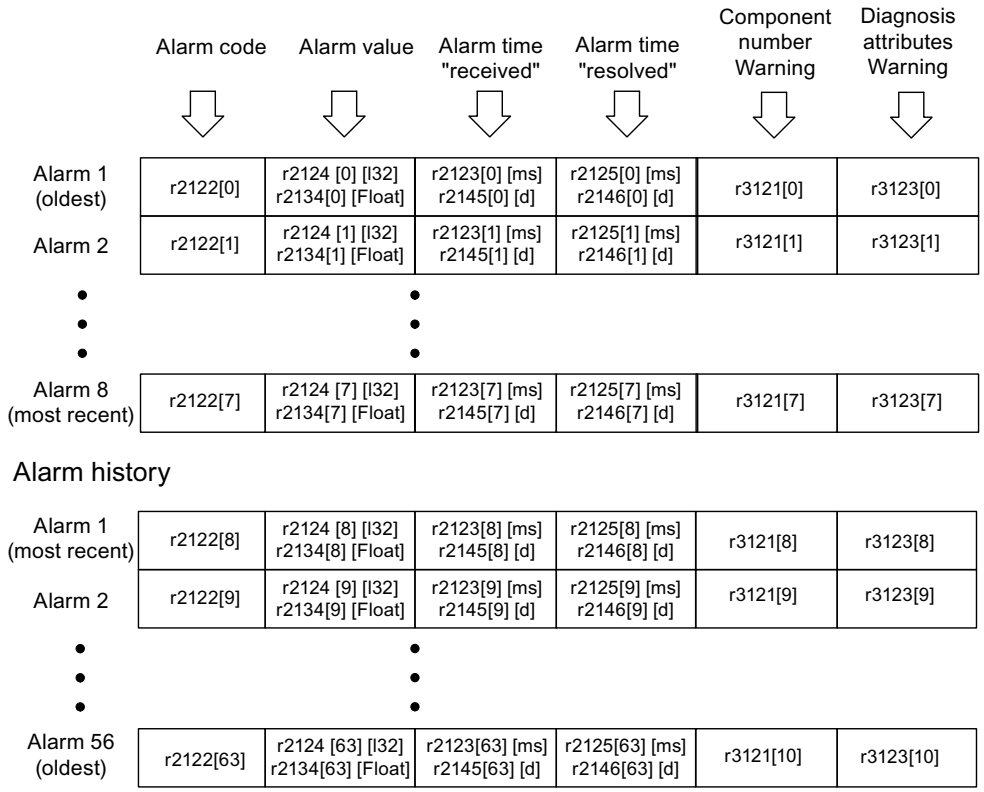

Figure 5-13 Structure of alarm buffer

Alarms that occur are entered in the alarm buffer as follows:

A maximum of 64 alarms are displayed in the alarm buffer:

- Index 0 ... 6: The first 7 alarms are displayed.
- Index 7: The most recent alarm is displayed.

A maximum of 56 alarms are displayed in the alarm history:

- Index 8: The most recent alarm is displayed.
- Index 9 ... 63: The first 55 alarms are displayed.

Properties of the alarm buffer/alarm history:

- The arrangement in the alarm buffer is made after the time that they occurred from 7 to 0. In the alarm history, this is from 8 to 63.
- If 8 alarms have been entered into the alarm buffer, and a new alarm is received, then the alarms that have been resolved are transferred into the alarm history.

- r2121 is incremented each time the alarm buffer changes.
- An alarm value (r2124) can be output for an alarm. The alarm value is used to diagnose the alarm more accurately; please refer to the alarm description for details of the meaning.

Deleting the alarm buffer, index [0...7]:

- The alarm buffer index [0...7] is reset as follows: p2111 = 0

5.3.3 Configuring messages

The properties of the faults and alarms in the drive system are permanently defined.

The following can be configured for some of the messages within a permanently defined framework for the drive system:

Change message type (example)

Select message	Set message type	
p2118[5] = 1001	p2119[5]	= 1: Fault (F)
		= 2: Alarm (A)
		= 3: No message (N)

Change fault reaction (example)

Select message	Set fault response	
p2100[3] = 1002	p2101[3]	= 0: None
		= 1: OFF1
		= 2: OFF2
		= 3: OFF3
		= 4: STOP1 (available soon)
		= 5: STOP2
		= 6: IASC/DC brake Internal armature short-circuit braking or DC brake
		= 7: ENCODER (p0491)

Change acknowledgment (example)

Select message	Set acknowledgment	
p2126[4] = 1003	p2127[4]	= 1: POWER ON
		= 2: IMMEDIATELY
		= 3: PULSE INHIBIT

Note

Only those messages which are listed in the indexed parameters can be changed as desired. All other message settings retain their factory settings or are reset to the factory settings.

Examples:

- In the case of messages listed via p2128[0...19], the message type can be changed. The factory setting is set for all other messages.
- The fault response of fault F12345 has been changed via p2100[n]. The factory settings are to be restored.
  – p2100[n] = 0

Triggering on messages (example)

Select message	Trigger signal
p2128[0] = 1001	BO: r2129.0
or	
p2128[1] = 1002	BO: r2129.1

Note

The value from CO: r2129 can be used as group trigger.

CO: r2129 = 0 No selected message has been output.

CO: r2129 > 0 Group trigger.
At least one selected message has been output.
The individual binector outputs BO: r2129 should be investigated.

Triggering messages externally

If the appropriate binector input is interconnected with an input signal, fault 1, 2 or 3 or alarm 1, 2 or 3 can be triggered via an external input signal.

Once an external fault (1 to 3) has been triggered on the Control Unit drive object, this fault is also present on all associated drive objects. If one of these external faults is triggered on a different drive object, it is only present on that particular drive object.

BI: p2106	→ External fault 1	→ F07860(A)
BI: p2107	→ External fault 2	→ F07861(A)
BI: p2108	→ External fault 3	→ F07862(A)
BI: p2112	→ External alarm 1	→ A07850(F)
BI: p2116	→ External alarm 2	→ A07851(F)
BI: p2117	→ External alarm 3	→ A07852(F)

Note

An external fault or alarm is triggered by a 1/0 signal.

An external fault and alarm do not usually mean that an internal drive message has been generated. The cause of an external fault and warning should, therefore, be remedied outside the drive.

5.3.4 Parameters and function diagrams for faults and alarms

Function diagrams (see SINAMICS S110 List Manual)

- 1710 Overview diagram – monitoring functions, faults, alarms
- 8060 Diagnostics - Fault buffer
- 8065 Diagnostics - Alarm buffer
- 8070 Diagnostics - Fault/alarm trigger word r2129
- 8075 Diagnostics - Fault/alarm configuration

Overview of important parameters (see SINAMICS S110 List Manual)

- r0944 Counter for fault buffer changes
  ...
- p0952 Fault counter
- p2100[0...19] Fault code for fault reaction selection
  ...
- r2139 Status word for faults
- r3120[0...63] Component number fault
- r3121[0...63] Component number alarm
- r3122[0...63] Diagnostics attribute fault
- r3123[0...63] Diagnostics attribute alarm

5.3.5 Forwarding of faults and alarms

Forwarding of faults and alarms of the CU

When faults or alarms are triggered on the drive object of the CU, it is always assumed that central functions of the drive unit are affected. For this reason, these faults and alarms are not only signaled on the drive object of the CU, but are also forwarded to all other drive objects. The fault reaction affects the drive object of the CU and all other drive objects.

A fault that is set on the drive object of the CU must be acknowledged on all drive objects to which this fault was forwarded. In this way, the fault is then automatically acknowledged on the drive object of the CU. Alternatively all faults of all drive objects can also be acknowledged on the CU.

If a set alarm is reset on the drive object of the CU, this alarm also disappears automatically on the other drive objects to which this alarm was forwarded.

Forwarding of faults and alarms due to BICO interconnections

If two or more drive objects are connected via BICO interconnections, faults and alarms of CU-type drive objects are forwarded to SERVO-type drive objects.

Fault and alarm classes

There are differentiated alarm messages in the cyclic telegrams between the former alarm classes "Alarm" and "Fault". Therefore there are 3 additional levels of alarm between the "pure" alarm and the fault.

The function permits a higher-level control (SIMATIC, SIMOTION, SINUMERIK, etc.) to have different control reactions to alarm messages from the drive.

The new statuses act as alarms for the drive, therefore there is NO immediate reaction from the drive (like for the former level "alarm").

Information on alarm classes are described in status word ZSW2 at bit positions bit 5 - 6 (for SINAMICS) or bit 11-12 (SIMODRIVE 611) (see also "ZSW2" in the chapter "Cyclic Communication").

ZSW2: Valid for SINAMICS Interface Mode p2038=0 (function diagram 2454)

Bit 5 - 6 Alarm classes alarms

= 0: Alarm (former alarm level)

= 1: Alarm class W_NCA alarms

= 2: Alarm class W_NCB alarms

= 3: Alarm class W_NCC alarms

ZSW2: Valid for SIMODRIVE 611 Interface Mode p2038=1 (function diagram 2453)

Bit 11 - 12 Alarm classes alarms

= 0: Alarm (former alarm level)

= 1: Alarm class W_NCA alarms

= 2: Alarm class W_NCB alarms

= 3: Alarm class W_NCC alarms

These attributes for differentiating the alarms are assigned implicitly to the appropriate alarm numbers. The reaction to the existing alarm classes in the alarm is defined by the user program in the higher-level control.

Explanations of the alarm classes

- W_NCA: Drive operation currently not limited
  - e.g. alarm when measurement systems inactive
  - no limitation on current movement
  - Prevent possible switching to the defective measuring system
- W_NCB: Time-limited operation
  - e.g. prewarning temperature: without further action the drive may need to be switched off
  - after a timer stage → additional fault
  - after exceeding a trip threshold → additional fault
- W_NCC: Functionally limited operation
  - e.g. reduced voltage/current/torque/speed limits (i2t)
  - e.g. continue with reduced accuracy / resolution
  - e.g. continue without encoder

Parameterization using the Basic Operator Panel 20 6

6.1 General information about the BOP20

With the Basic Operator Panel 20 (BOP20), drives can be powered up and powered down during the commissioning phase and parameters can be displayed and modified. Faults can be diagnosed as well as acknowledged.

The BOP20 is snapped onto the Control Unit; to do this the dummy cover must be removed (for additional information on mounting, please refer to the Equipment Manual).

Overview of displays and keys

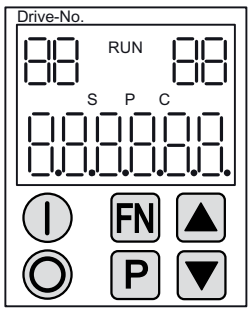

Figure 6-1 Overview of displays and keys

Information on the displays

Table 6- 1 LED

Display	Meaning
top left 2 positions	The active drive object of the BOP is displayed here. The displays and key operations always refer to this drive object.
RUN	Is lit (bright) if the drive is in the RUN state (operation). RUN is also displayed via bit r0899.2 of the drive.
top right 2 positions	The following is displayed in this field: • More than 6 digits: Characters that are still present but are invisible (e.g. "r2" —> 2 characters to the right are invisible, "L1" —> 1 character to the left is invisible) • Designation of BICO inputs (bi, ci) • Designation of BICO outputs (bo, co) • Source object of a BICO interconnection to a drive object different than the active one.
S	Is (bright) if at least one parameter was changed and the value was not transferred into the non-volatile memory.
P	Is lit (bright) if, for a parameter, the value only becomes effective after pressing the P key.
C	Is light (bright) if at least one parameter was changed and the calculation for consistent data management has still not been initiated.
Below, 6 digit	Displays, e.g. parameters, indices, faults and alarms.

Information on the keys

Table 6- 2 Keys

Key	Name	Meaning
	ON	Power up the drive for which the command "ON/OFF1" should come from the BOP. Binector output r0019.0 is set using this pushbutton.
	OFF	Powering down the drive for which the commands "ON/OFF1", "OFF2" or "OFF3" should come from the BOP. The binector outputs r0019.0, .1 and .2 are simultaneously reset when this key is pressed. After the key has been released, binector outputs r0019.1 and .2 are again set to a "1" signal.
	Functions	The significance of this key depends on the current display. **Note**: The effectiveness of this key to acknowledge faults can be defined using the appropriate BiCo parameterization.
	Parameters	The significance of this key depends on the current display. If this key is pressed for 3 s, the "Copy RAM to ROM" function is executed. The "S" displayed on the BOP disappears.
	Raise	The keys depend on the current display and are used to either raise or lower values.
	Lower	

BOP20 functions

Table 6- 3 Functions

Name	Description
Units	The units are not displayed on the BOP.
Access level	The access level for the BOP is defined using p0003. The higher the access level, the more parameters can be selected using the BOP.
Unplug while voltage is present	The BOP can be withdrawn and inserted under voltage. • The ON and OFF keys have a function. When withdrawing, the drive is stopped. Once the BOP has been inserted, the drive must be switched on again. . • ON and OFF keys have no function Withdrawing and inserting has no effect on the drive.
Actuating keys	The following applies to the "P" and "FN" keys: • When used in a combination with another key, "P" or "FN" must be pressed first and then the other key.

Parameters for BOP

Drive object, Control Unit

- p0003 BOP access level
- p0009 Device commissioning, parameter filter
- r0019 CO/BO: Control word, BOP
- p0977 Save all parameters

SERVO drive object

- p0010 Commissioning parameter filter

6.2 Displays and using the BOP20

Features

- Operating display
- Changing the active drive object
- Displaying/changing parameters
- Displaying/acknowledging faults and alarms
- Controlling the drive using the BOP20

Parameter display

The parameters are selected in the BOP20 using the number. The parameter display is reached from the operating display by pressing the "P" key. Parameters can be searched for using the arrow keys. The parameter value is displayed by pressing the "P" key again. You can toggle between the drive objects by simultaneously pressing the keys "FN" and the arrow keys. You can toggle between r0000 and the parameter that was last displayed by pressing the "FN" key in the parameter display.

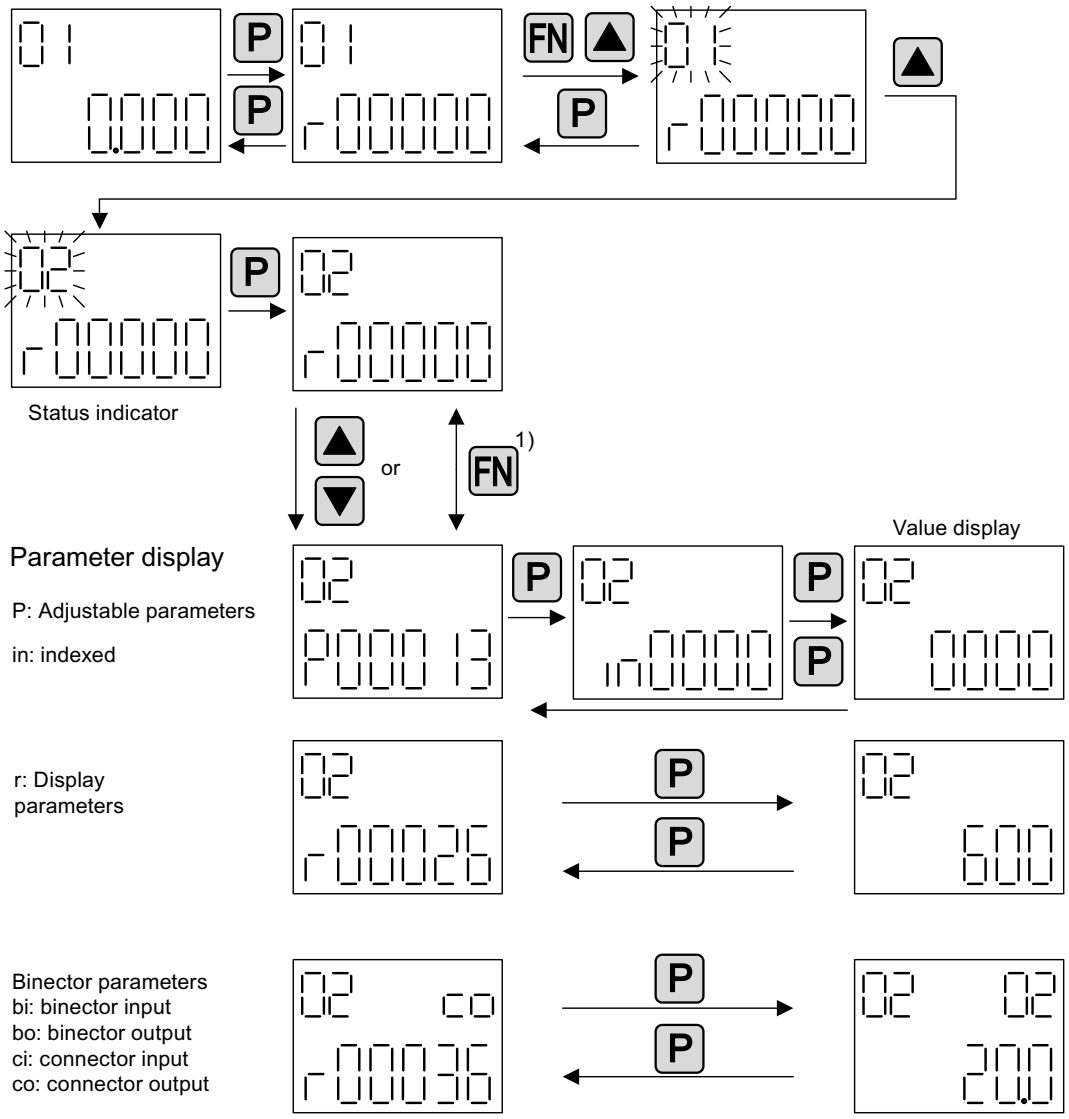

1) You can switch between r0000 and the parameter that was last displayed by pressing the Fn key in the parameter display.

Figure 6-2 Parameter display

Value display

To switch from the parameter display to the value display, press the "P" key. In the value display, the values of the adjustable parameters can be increased and decreased using the arrow. The cursor can be selected using the "FN" key.

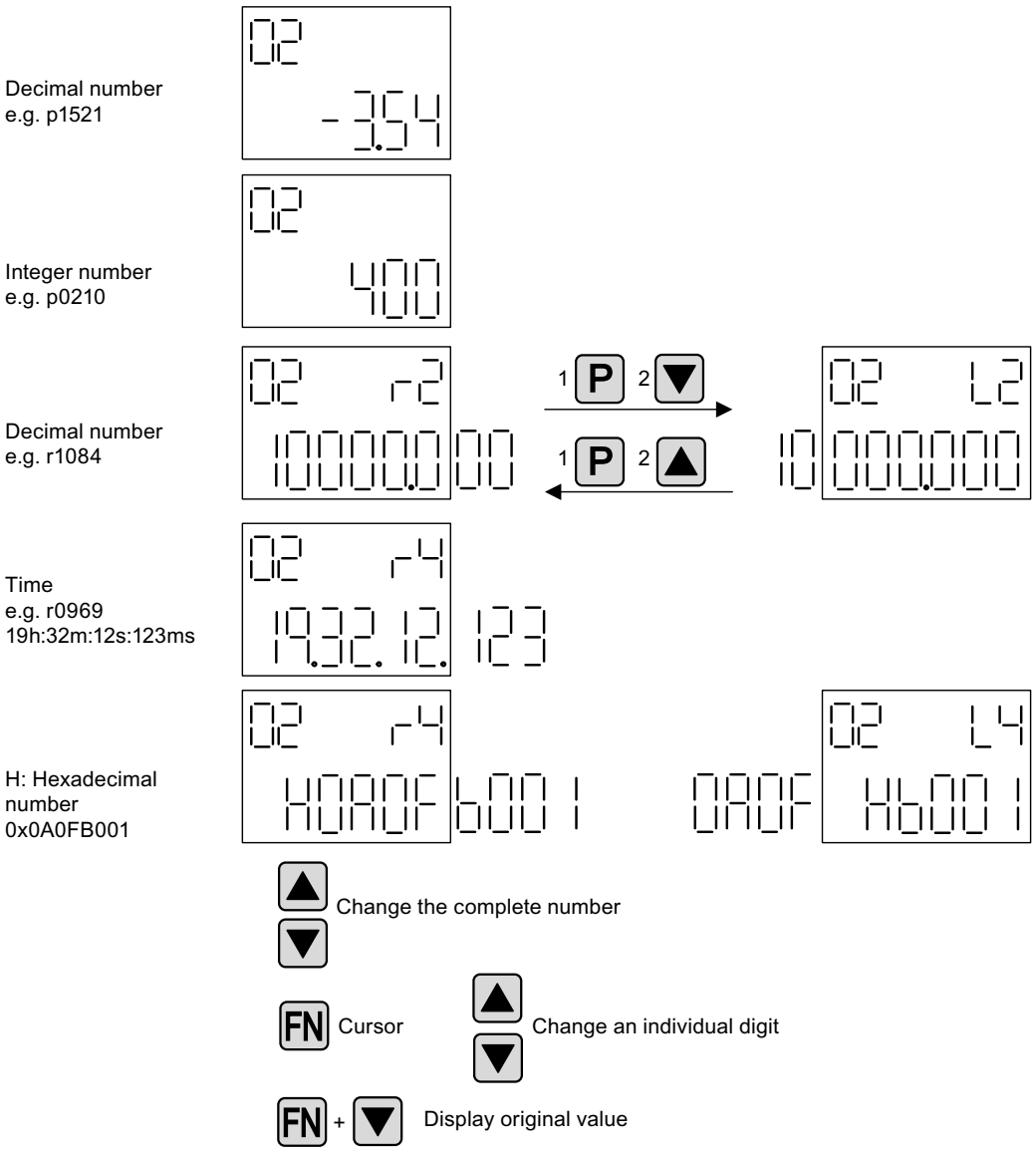

Figure 6-3 Value display

Example: Changing binector and connector input parameters

For the binector input p0840[0] (OFF1) of drive object 2 binector output r0019.0 of the Control Unit (drive object 1) is interconnected.

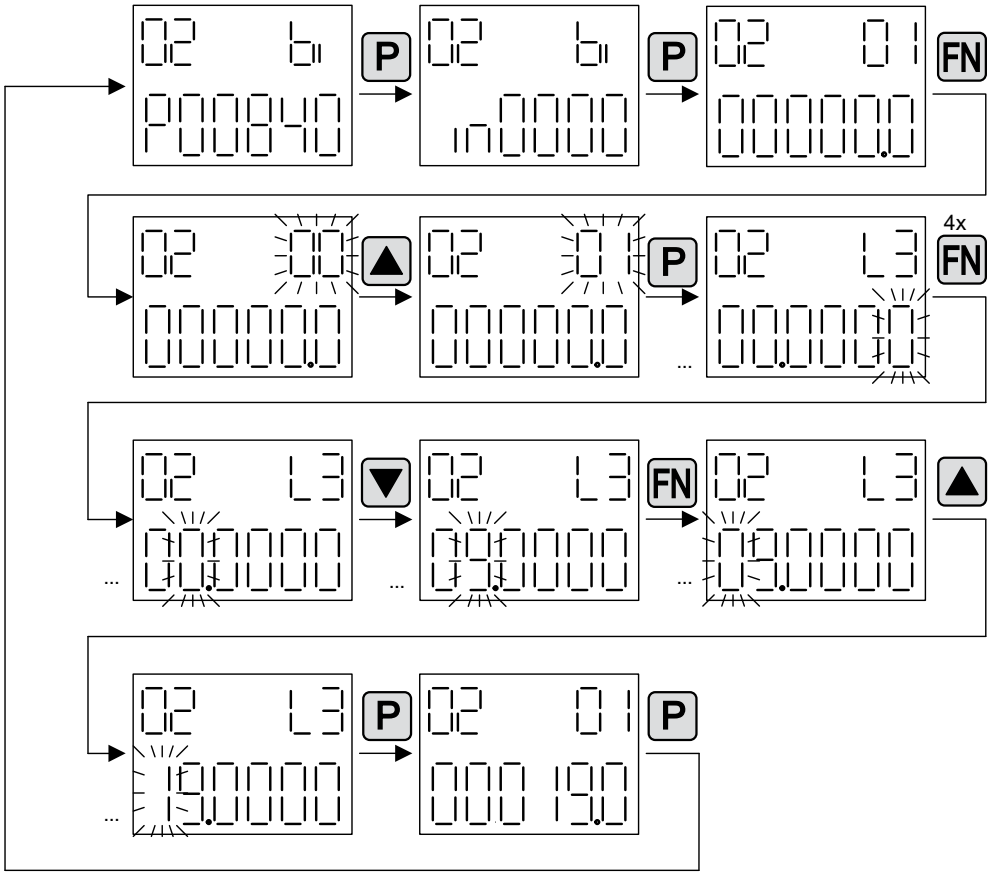

Figure 6-4 Example: Changing indexed binector parameters

6.3 Fault and alarm displays

Displaying faults

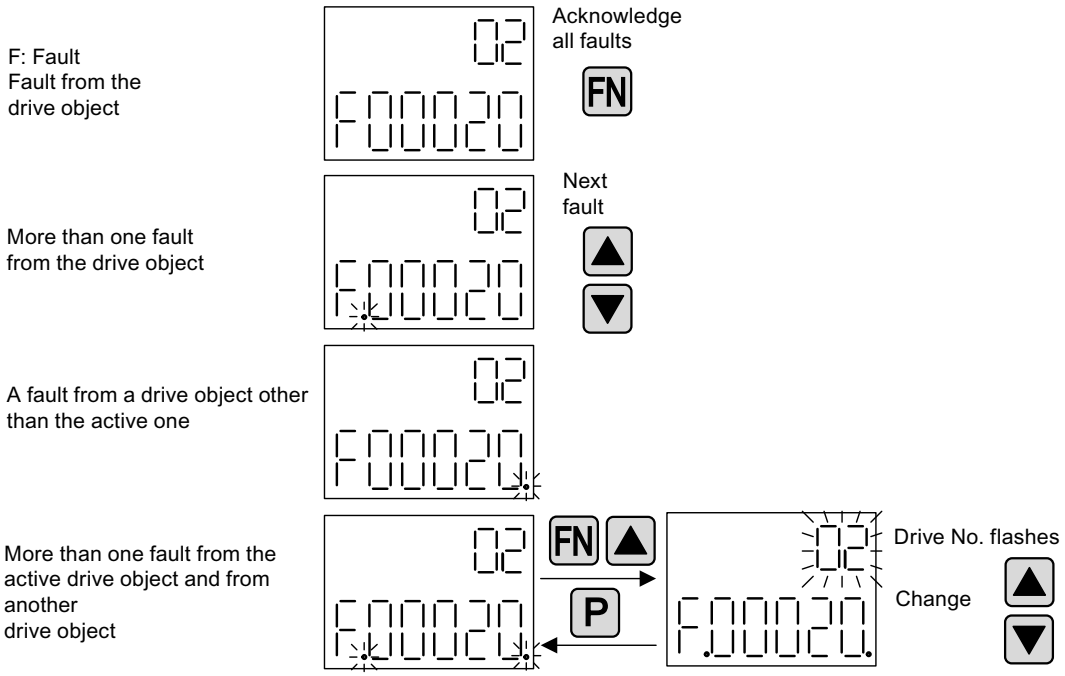

Figure 6-5 Faults

Displaying alarms

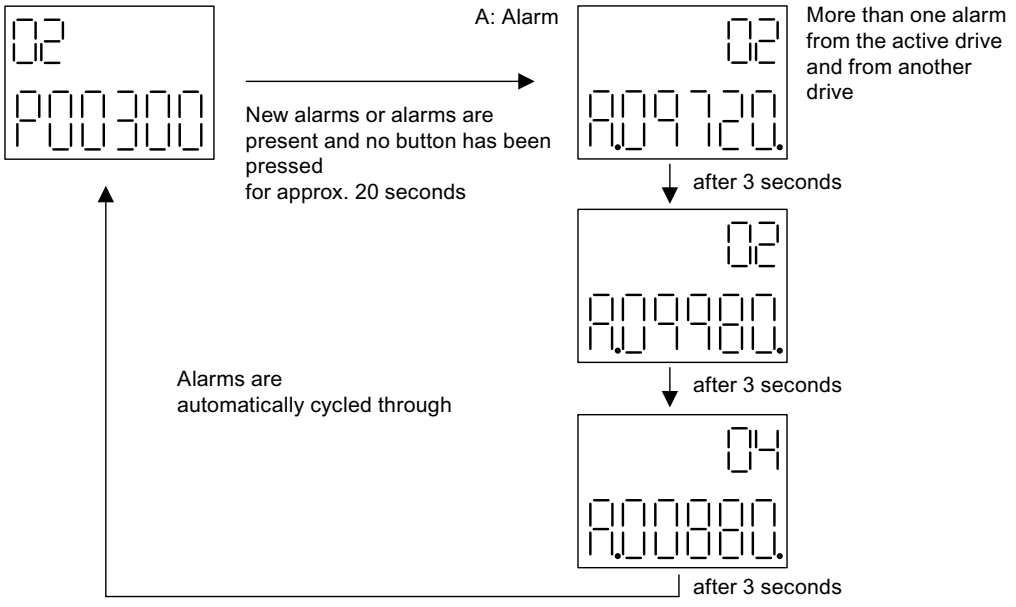

Figure 6-6 Alarms

6.4 Controlling the drive using the BOP20

Description

When commissioning the drive, it can be controlled via the BOP20. A control word is available on the Control Unit drive object (r0019) for this purpose, which can be interconnected with the appropriate binector inputs of e.g. the drive.

The interconnections do not function if a standard PROFIdrive telegram was selected as its interconnection cannot be disconnected.

Table 6- 4 BOP20 control word

Bit (r0019)	Name	Example, interconnection parameters
0	ON / OFF (OFF1)	p0840
1	No coast down/coast down (OFF2)	p0844
2	No quick stop/quick stop (OFF3)	p0848
Note: For simple commissioning, only bit 0 should be interconnected. When interconnecting bits 0 ... 2, then the system is powered-down according to the following priority: OFF2, OFF3, OFF1.		
7	Acknowledge fault (0 → 1)	p2102

Drive functions

7

7.1 Servo control

This type of closed-loop control enables operation with a high dynamic response and precision for a motor with a motor encoder.

7.1.1 Speed controller

The speed controller controls the motor speed using the actual values from the encoder (operation with encoder) or the calculated actual speed value from the electric motor model (operation without encoder).

Properties

- Speed setpoint filter
- Speed controller adaptation

Note

Speed and torque cannot be controlled simultaneously. If speed control is activated, this has priority over torque control.

Limits

The maximum speed p1082[D] is defined with default values for the selected motor and becomes active during commissioning. The ramp-function generators refer to this value.

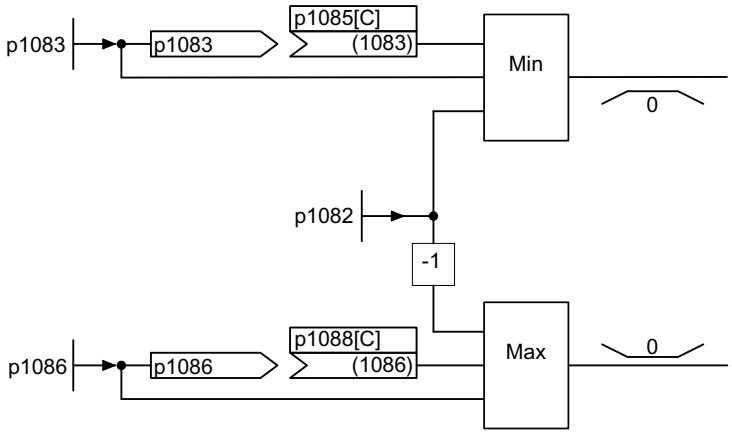

Figure 7-1 Speed controller limitations

7.1.2 Speed setpoint filter

The speed setpoint filter can be used as follows:

- Bandstop
- Low-pass 1st order (PT1) or
- Low-pass 2nd order (PT2)

The filter is activated via parameter p1414. The filter elements are selected via parameter p1415.

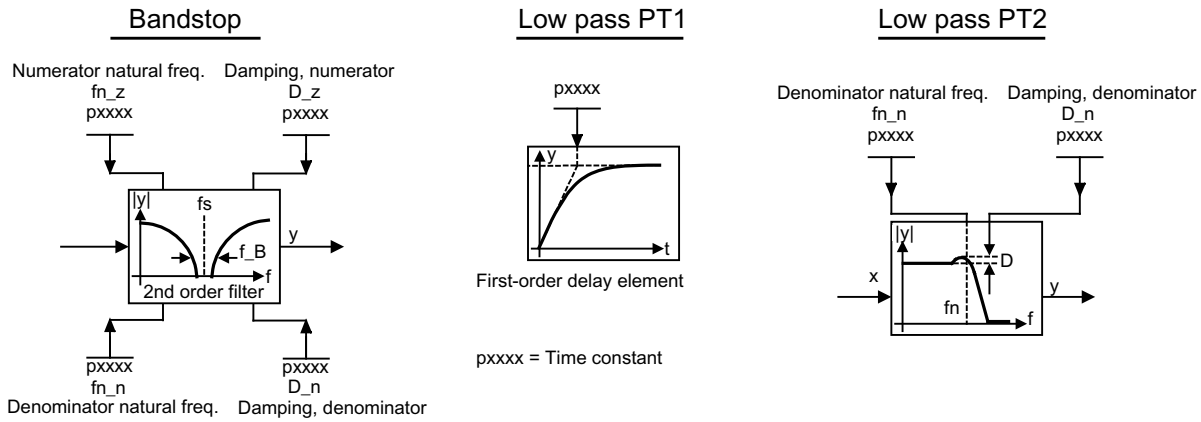

Figure 7-2 Filter overview for speed setpoint filters

Function diagrams (see SINAMICS S110 List Manual)

- 5020 Speed setpoint filter and speed pre-control

Overview of important parameters (see SINAMICS S110 List Manual)

Adjustable parameters

- p1414[D] Speed setpoint filter activation
- p1415[D] Speed setpoint filter 1 type
- p1416[D] Speed setpoint filter 1 time constant
- p1417[D] Speed setpoint filter 1 denominator natural frequency
- p1418[D] Speed setpoint filter 1 denominator damping
- p1419[D] Speed setpoint filter 1 numerator natural frequency
- p1420[D] Speed setpoint filter 1 numerator damping

Parameterization

The "speed setpoint filter" parameter screen is selected via the following icon in the toolbar of the STARTER commissioning tool:

Figure 7-3 STARTER icon for "speed setpoint filter"

7.1.3 Speed controller adaptation

Two adaptation methods are available, namely free Kp_n adaptation and speed-dependent Kp_n/Tn_n adaptation.

Free Kp_n adaptation is also active in "operation without encoder" mode and is used in "operation with encoder" mode as an additional factor for speed-dependent Kp_n adaptation.

Speed-dependent Kp_n/Tn_n adaptation is only active in "operation with encoder" mode and also affects the Tn_n value.

Function diagram 5050 (see SINAMICS S110 List Manual) illustrates how speed controller adaptation operates.

Example of speed-dependent adaptation

Note

This type of adaptation is only active in "operation with encoder" mode.

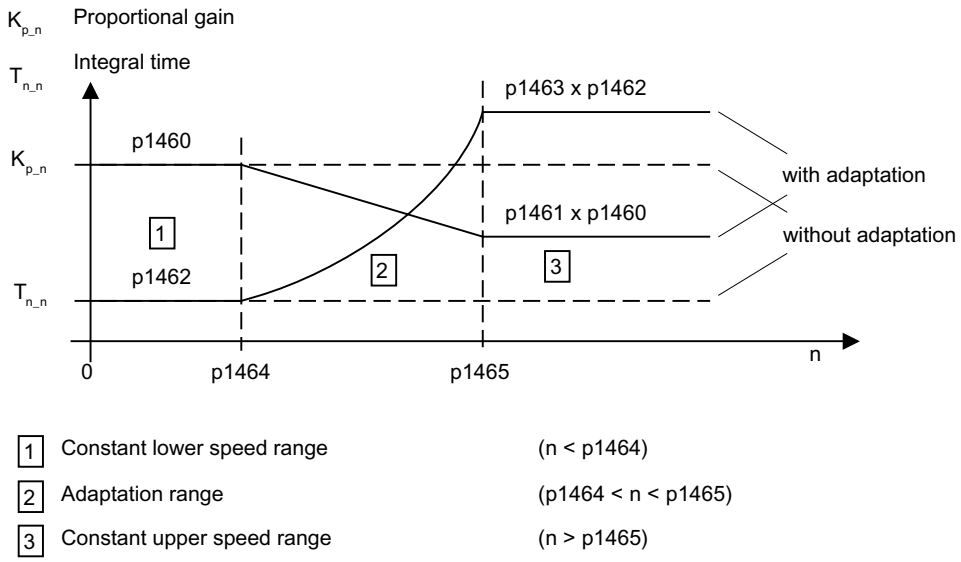

Figure 7-4 Speed controller Kp_n/Tn_n adaptation

Parameterization

The "speed controller" parameter screen is selected via the following icon in the toolbar of the STARTER commissioning tool:

Figure 7-5 STARTER icon for "speed controller"

Function diagrams (see SINAMICS S110 List Manual)

- 5050 Kp_n and Tn_n adaptation

Overview of important parameters (see SINAMICS S110 List Manual)

Free Kp_n adaptation

- p1455[0...n] CI: Speed controller P gain adaptation signal
- p1456[0...n] Speed controller P gain adaptation lower starting point
- p1457[0...n] Speed controller P gain adaptation upper starting point
- p1458[0...n] Lower adaptation factor
- p1459[0...n] Upper adaptation factor

Speed-dependent Kp_n/Tn_n adaptation

- p1460[0...n] Speed controller P gain lower adaptation speed
- p1461[0...n] Speed controller Kp adaptation speed upper scaling
- p1462[0...n] Speed controller integral time lower adaptation speed
- p1463[0...n] Speed controller Tn adaptation speed upper scaling
- p1464[0...n] Speed controller lower adaptation speed
- p1465[0...n] Speed controller upper adaptation speed
- p1466[0...n] CI: Speed controller P gain scaling

7.1.4 Torque-controlled operation

Description

An operating mode switchover (p1300) or binector input (p1501) can be used to switch from speed control to torque control mode. All torque setpoints from the speed control system are rendered inactive. The setpoints for torque control mode are selected by parameterization.

Properties

- Switchover to torque control mode via:
  - Operating mode selection
  - Binector input
- Torque setpoint can be specified:
  - The torque setpoint source can be selected
  - The torque setpoint can be scaled
  - An additional torque setpoint can be entered
- Display of the overall torque

Commissioning of torque control mode

1. Set torque control mode (p1300 = 23; p1501 = "1" signal)
2. Specify torque setpoint
   - Select source (p1511)
   - Scale setpoint (p1512)
   - Select supplementary setpoint (1513)

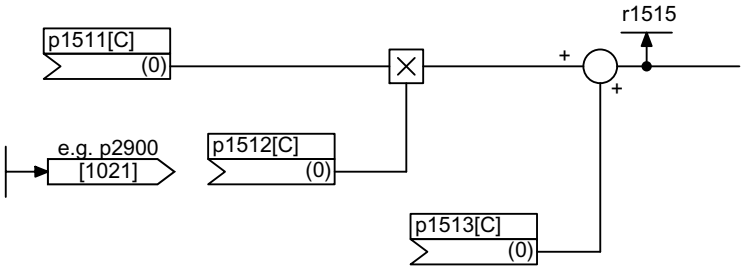

Figure 7-6 Torque setpoint

3. Activate enable signals

OFF responses

- OFF1 and p1300 = 23
  - Reaction as for OFF2
- OFF1, p1501 = "1" signal and p1300 ≠ 23
  - No separate braking response; the braking response takes place by a drive that specifies the torque.
  - The pulses are suppressed when the brake application time (p1217) expires. Zero speed is detected when the actual speed drops below the speed threshold (p1226) or once the monitoring time (p1227) started when speed setpoint ≤ speed threshold (p1226) has expired.
  - Switching on inhibited is activated.
- OFF2
  - Immediate pulse suppression, the drive coasts to standstill.
  - The motor brake (if parameterized) is closed immediately.
  - Switching on inhibited is activated.
- OFF3
  - Switch to speed-controlled operation
  - n_set = 0 is input immediately to brake the drive along the OFF3 deceleration ramp (p1135).
  - When zero speed is detected, the motor brake (if parameterized) is closed.
  - The pulses are suppressed when the motor brake application time (p1217) has elapsed. Zero speed is detected when the actual speed drops below the speed threshold (p1226) or once the monitoring time (p1227) started when speed setpoint ≤ speed threshold (p1226) has expired.
  - Switching on inhibited is activated.

Function diagrams (see SINAMICS S110 List Manual)

- 5060 Torque setpoint, control type changeover
- 5610 Torque limiting/reduction/interpolator

Signal overview (see SINAMICS S110 List Manual)

- r1406.12 Torque control active

Parameterization

The "torque setpoints" parameter screen is selected via the following icon in the toolbar of the STARTER commissioning tool:

Figure 7-7 STARTER icon for "torque setpoints"

Overview of important parameters (see SINAMICS S110 List Manual)

Adjustable parameters

- p1300 Open-loop/closed-loop control operating mode
- p1501[C] BI: Change over between closed-loop speed/torque control
- p1511[C] CI: Supplementary torque 1
- p1512[C] CI: Supplementary torque 1 scaling
- p1513[C] CI: Supplementary torque 2

Display parameters

- r1515 Supplementary torque total

7.1.5 Torque setpoint limitation

Description

The steps required for limiting the torque setpoint are as follows:

1. Define the torque setpoint and an additional torque setpoint
2. Generate torque limits

The torque setpoint can be limited to a maximum permissible value in all four quadrants. Different limits can be parameterized for motor and regenerative modes.

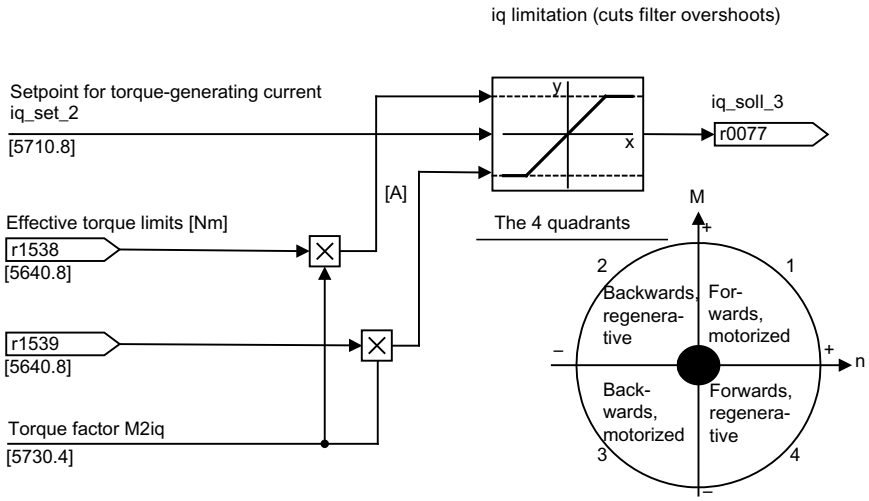

Figure 7-8 Current/torque setpoint limiting

Note

This function is effective immediately without any settings. The user can also define further settings for limiting the torque.

Properties

The connector inputs of the function are initialized with fixed torque limits. If required, the torque limits can also be defined dynamically (during operation).

- A control bit can be used to select the torque limitation mode. The following alternatives are available:
  - Upper and lower torque limit
  - Motor and regenerative torque limit
- Additional power limitation configurable
  - Motor mode power limit
  - Regenerative mode power limit
- The following factors are monitored by the current controller and therefore always apply in addition to torque limitation:
  - Stall power
  - Maximum torque-generating current
- Offset of the setting values also possible (see "Example: Torque limits with or without offset").
- The following torque limits are displayed via parameters:
  - Lowest of all upper torque limits with and without offset
  - Highest of all lower torque limits with and without offset

Fixed and variable torque limit settings

Table 7- 1 Fixed and variable torque limit settings

Selection	Torque limitation mode			
Mode	Maximum upper or lower torque limits p1400.4 = 0		Maximum motor or regenerative mode torque limits p1400.4 = 1	
Fixed torque limit	Upper torque limit (as a positive value)	p1520	Motor mode torque limit (as a positive value)	p1520
	Lower torque limit (as a negative value)	p1521	Regenerative mode torque limit (as a negative value)	p1521
Source for variable torque limit	Upper torque limit	p1522	Motor mode torque limit	p1522
	Lower torque limit	p1523	Regenerative mode torque limit	p1523
Source for variable scaling factor of torque limit	Upper torque limit	p1528	Motor mode torque limit	p1528
	Lower torque limit	p1529	Regenerative mode torque limit	p1529
Torque offset for torque limit	Shifts the upper and lower torque limits together	p1532	Shifts the motor and regenerative mode torque limits together	p1532

Variants of torque limitation

The following variants are available:

1. No settings entered:

   The application does not require any additional restrictions to the torque limits.

2. Fixed limits are required for the torque:

   The fixed upper and lower limits or alternatively the fixed motor and regenerative limits can be specified separately by different sources.

3. Dynamic limits are required for the torque:

   – The dynamic upper and lower limit or, alternatively, the dynamic motor and regenerative limit can be specified separately by different sources.

   – Parameters are used to select the source of the current limit.

4. A torque offset can be parameterized.

5. In addition, the power limits can be parameterized separately for motor and regenerative mode.

NOTICE
Negative values at r1534 or positive values at r1535 represent a minimum torque for the other torque directions and can cause the drive to rotate if no load torque is generated to counteract this (see function diagram 5630 in the SINAMICS S110 List Manual).

Example: Torque limits with or without offset

The signals selected via p1522 and p1523 include the torque limits parameterized via p1520 and p1521.

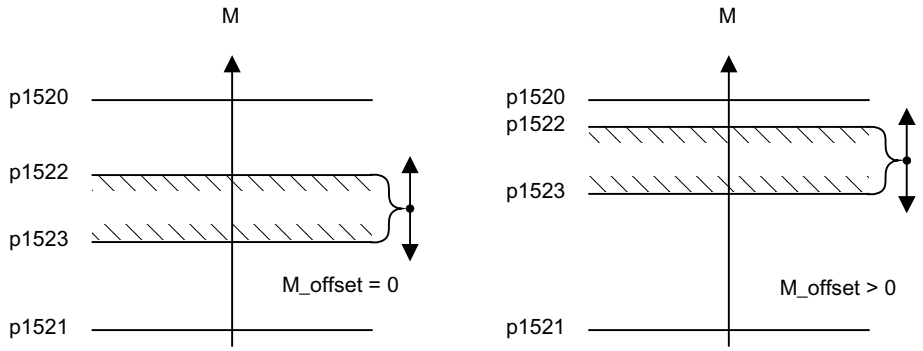

Figure 7-9 Example: Torque limits with or without offset

Activating the torque limits

1. Use parameters to select the torque limitation source.
2. Use a control word to specify the torque limitation mode.
3. The following can also be carried out if necessary:
   - Select and activate additional limitations.
   - Set the torque offset.

Examples

- Travel to fixed stop
- Tension control for continuous goods conveyors and winders

Function diagrams (see SINAMICS S110 List Manual)

- 5610 Torque limiting/reduction/interpolator
- 5620 Motor/generator torque limit
- 5630 Upper/lower torque limit
- 5640 Mode changeover, power/current limiting

Parameterization

The "torque limiting" parameter screen is selected via the following icon in the toolbar of the STARTER commissioning tool:

Figure 7-10 STARTER icon for "torque limiting"

Overview of important parameters (see SINAMICS S110 List Manual)

- p0640[0...n] Current limit
- p1400[0...n] Speed control configuration
- r1508 CO: Torque setpoint before supplementary torque
- r1509 CO: Torque setpoint before torque limiting
- r1515 Supplementary torque total
- p1520[0...n] CO: Torque limit, upper/motoring
- p1521[0...n] CO: Torque limit, lower/regenerative
- p1522[C] CI: Torque limit, upper/motoring
- p1523[C] CI: Torque limit, lower/regenerative
- r1526 Torque limit, upper/motoring without offset
- r1527 Torque limit, lower/regenerative without offset
- p1528[0...n] CI: Torque limit, upper/motoring, scaling
- p1529[0...n] CI: Torque limit, lower/regenerative scaling
- p1530[0...n] Motor mode power limit
- p1531[0...n] Regenerative mode power limit
- p1532[0...n] Torque limit offset
- r1533 Maximum torque-generating current of all current limits
- r1534 CO: Torque limit, upper total
- r1535 CO: Torque limit, lower total
- r1536 Maximum motor-mode torque-generating current limit
- r1537 Minimum regenerative-mode torque-generating current
- r1538 CO: Upper effective torque limit
- r1539 CO: Lower effective torque limit

7.1.6 Current controller

Properties

- PI controller for current control
- Two identical current setpoint filters
- Current and torque limitation
- Current controller adaptation
- Flux control

Closed-loop current control

No settings are required for operating the current controller. Optimization measures can be taken in certain circumstances.

Current and torque limitation

The current and torque limitations are initialized when the system is commissioned for the first time and should be adjusted according to the application.

Current controller adaptation

The P gain of the current controller can be reduced (depending on the current) by means of current controller adaptation. Current controller adaptation can be deactivated with the setting p1402.2 = 0.

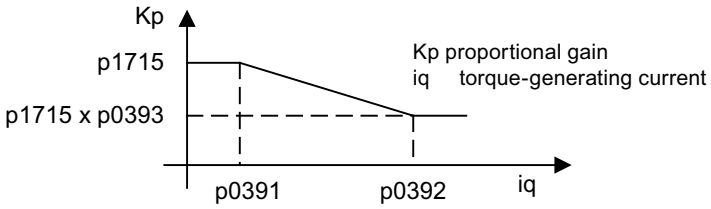

Figure 7-11 Current controller adaptation

Flux controller (for induction motor)

The parameters for the flux controller are initialized when the system is commissioned for the first time and do not usually need to be adjusted.

Commissioning with STARTER

The "current controller" parameter screen is selected via the following icon in the toolbar of the STARTER commissioning tool:

Figure 7-12 STARTER icon for "current controller"

Function diagrams (see SINAMICS S110 List Manual)

- 5710 Current setpoint filters
- 5714 Iq and Id controller
- 5722 Specified field current, flux reduction, flux controller

Overview of important parameters (see SINAMICS S110 List Manual)

Closed-loop current control

- p1701[0...n] Current controller reference model dead time
- p1715[0...n] Current controller P gain
- p1717[0...n] Current controller integral time

Current and torque limitation

- p0323[0...n] Maximum motor current
- p0326[0...n] Stall torque correction factor
- p0640[0...n] Current limit
- p1520[0...n] CO: Torque limit, upper/motoring
- p1521[0...n] CO: Torque limit, lower/regenerative
- p1522[0...n] CI: Torque limit, upper/motoring
- p1523[0...n] CI: Torque limit, lower/regenerative
- p1524[0...n] CO: Torque limit, upper/motoring, scaling
- p1525[0...n] CO: Torque limit, lower/regenerative scaling
- p1528[0...n] CI: Torque limit, upper/motoring, scaling
- p1529[0...n] CI: Lower or regenerative torque limit scaling
- p1530[0...n] Motor mode power limit
- p1531[0...n] Regenerative mode power limit
- p1532[0...n] Torque offset torque limit

Display parameters

- r1526 Torque limit, upper/motoring without offset
- r1527 Torque limit, lower/regenerative without offset
- r1533 Maximum torque-generating current of all current limits
- r1534 CO: Torque limit, upper total
- r1535 CO: Torque limit, lower total
- r1536 Maximum torque-generating current limit
- r1537 Maximum torque-generating current limit
- r1538 CO: Upper effective torque limit
- r1539 CO: Upper effective torque limit

Current controller adaptation

- p0391[0...n] Current controller adaptation lower starting point
- p0392[0...n] Current controller adaptation upper starting point
- p0393[0...n] Current controller adaptation upper P gain
- p1590[0...n] Flux controller P gain
- p1592[0...n] Flux controller integral time

7.1.7 Current setpoint filter

Description

The two current setpoint filters connected in series can be parameterized as follows:

- Low-pass 2nd order (PT2: -40 dB/decade) (type 1)
- General filter 2nd order (type 2)
  Bandstop and lowpass with reduction are converted to the parameters of the general filter 2nd order via STARTER.
  - Bandstop
  - Low-pass with reduction by a constant value

The phase frequency curve is shown alongside the amplitude log frequency curve. A phase shift results in a control system delay and should be kept to a minimum.

Function diagram 5710 (see SINAMICS S110 List Manual) illustrates how the current setpoint filter operates.

Transfer function:

$$H_{(s)} = \frac{1}{\left(\frac{s}{2\pi f_N}\right)^2 + \frac{2D_N}{2\pi f_N} \bullet s + 1}$$

Denominator natural frequency f_N
Denominator damping D_N

Table 7- 2 Example of a PT2 filter

STARTER filter parameters	Amplitude log frequency curve	Phase frequency curve
Characteristic frequency f_N 500 Hz Damping D_N 0.7 dB	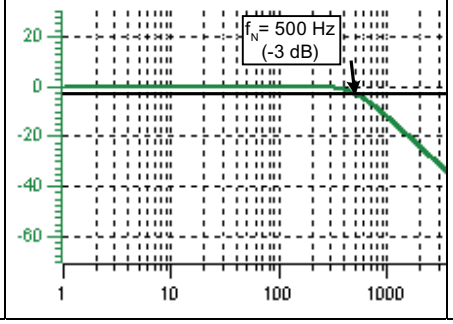	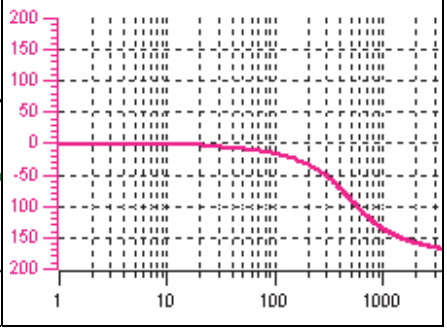

Band-stop with infinite notch depth

Table 7- 3 Example of band-stop with infinite notch depth

STARTER filter parameters	Amplitude log frequency curve	Phase frequency curve
Blocking frequency f_{Sp} = 500 Hz Bandwidth (-3 dB) f_{BB} = 500 Hz Notch depth K = -∞ dB Reduction Abs = 0 dB	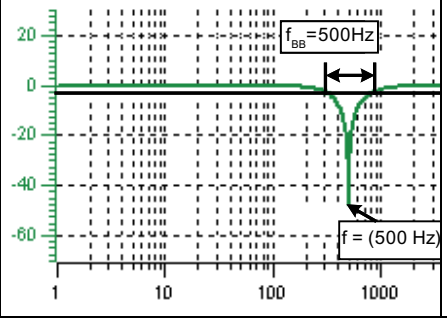	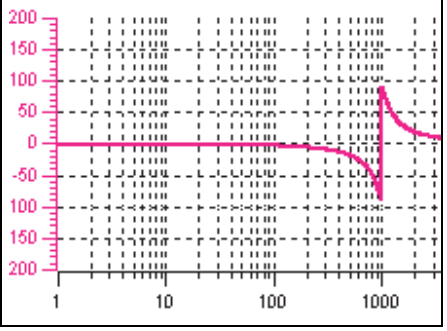

Simplified conversion to parameters for general order filters:

- Reduction or increase after the blocking frequency (Abs)
- Infinite notch depth at the blocking frequency
- Numerator natural frequency $f_Z = f_{Sp}$
- Numerator damping $D_Z = 0$
- Denominator natural frequency $f_N = f_{Sp}$
- Denominator damping:

$$D_N = \frac{f_{BB}}{2 \cdot f_{Sp}}$$

Band-stop with defined notch depth

Table 7- 4 Example of band-stop with defined notch depth

STARTER filter parameters	Amplitude log frequency curve	Phase frequency curve
Blocking frequency f_{Sp} = 500 Hz Bandwidth f_{BB} = 500 Hz Notch depth K = -20 dB Reduction Abs = 0 dB	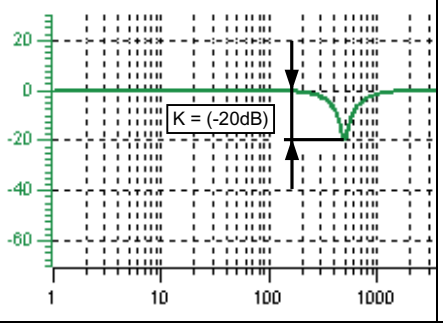	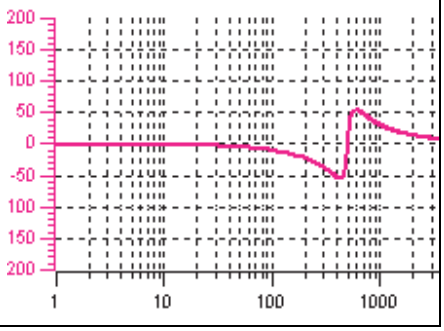

Simplified conversion to parameters for general order filters:

- No reduction or increase after the blocking frequency
- Defined notch at the blocking frequency K[dB] (e.g. -20 dB)
- Numerator natural frequency $f_Z = f_{Sp}$
- Numerator damping:

$$D_Z = \frac{f_{BB}}{2 \bullet f_{Sp} \bullet 10^{\frac{K}{20}}}$$

- Denominator natural frequency $f_N = f_{Sp}$
- Denominator damping:

$$D_N = \frac{f_{BB}}{2 \bullet f_{Sp}}$$

Band-stop with defined reduction

Table 7- 5 Example of band-stop

STARTER filter parameters	Amplitude log frequency curve	Phase frequency curve
Blocking frequency f_{SP} = 500 Hz Bandwidth f_{BB} = 500 Hz Notch depth K = -∞ dB Reduction ABS = -10 dB	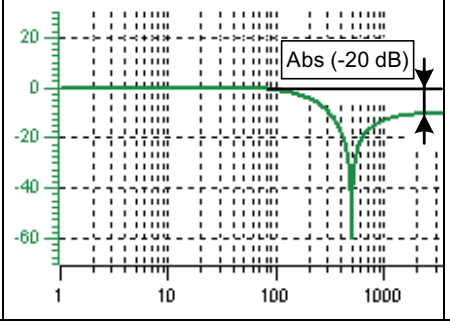	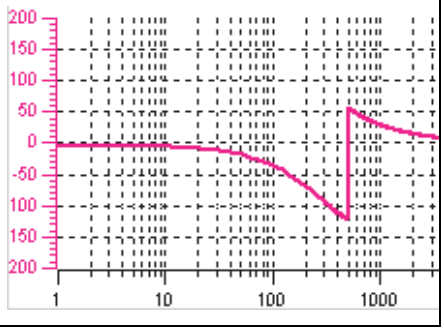

General conversion to parameters for general order filters:

- Numerator natural frequency:

$$f_Z = \frac{\omega_Z}{2\pi} = f_{Sp}$$

- Numerator damping:

$$D_Z = 10^{\frac{K}{20}} \bullet \frac{1}{2} \bullet \sqrt{\left(1 - \frac{1}{10^{\frac{Abs}{20}}}\right)^2 + \frac{f_{BB}^{\ 2}}{f_{Sp}^{\ 2} \bullet 10^{\frac{Abs}{10}}}}$$

- Denominator natural frequency:

$$f_N = \frac{\omega_N}{2\pi} = f_{Sp} \bullet 10^{\frac{Abs}{40}}$$

- Denominator damping:

$$D_N = \frac{f_{BB}}{2 \bullet f_{Sp} \bullet 10^{\frac{Abs}{40}}}$$

General low-pass with reduction

Table 7- 6 Example of general low-pass with reduction

STARTER filter parameters	Amplitude log frequency curve	Phase frequency curve
Characteristic frequency f_{Abs} = 500 Hz Damping D = 0.7 Reduction Abs = -10 dB	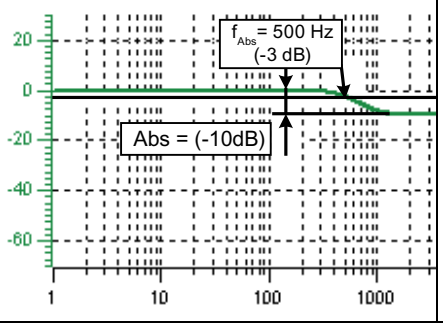	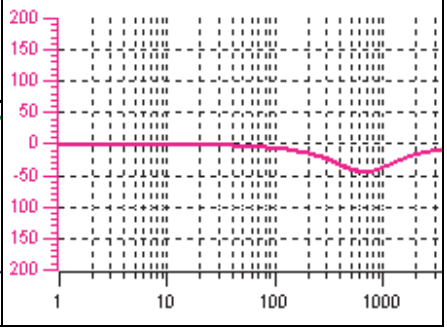

Conversion to parameters for general order filters:

- Numerator natural frequency $f_Z = f_{Abs}$ (start of reduction)
- Numerator damping:

$$f_Z = \frac{f_{Abs}}{10^{\frac{Abs}{40}}}$$

- Denominator natural frequency f_N
- Denominator damping D_N

Transfer function general 2nd order filter

$$H_{(s)} = \frac{\left(\frac{s}{2\pi f_Z}\right)^2 + \frac{2D_Z}{2\pi f_Z} \bullet s + 1}{\left(\frac{s}{2\pi f_N}\right)^2 + \frac{2D_N}{2\pi f_N} \bullet s + 1}$$

Numerator natural frequency f_Z

Numerator damping D_Z

Denominator natural frequency f_N

Denominator damping D_N

Table 7- 7 Example of general 2nd order filter

STARTER filter parameters	Amplitude log frequency curve	Phase frequency curve
Numerator frequency f_Z = 500 Hz Numerator damping D_Z = 0.02 dB Denominator frequency f_N = 900 Hz Denominator damping D_N = 0.15 dB	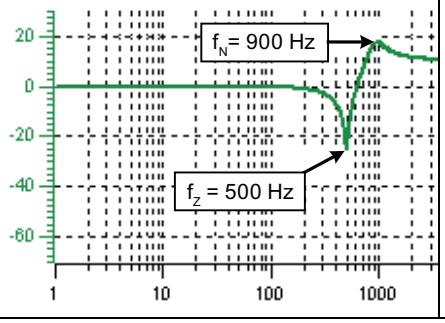	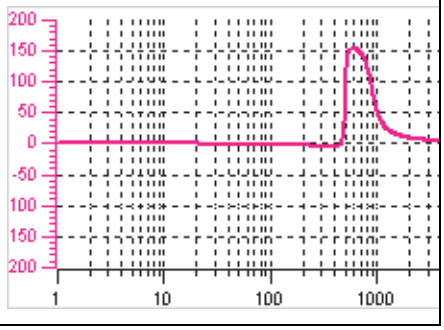

7.1.7.1 Integration

Parameterization

The "current setpoint filter" parameter screen is selected via the following icon in the toolbar of the STARTER commissioning tool:

Figure 7-13 STARTER icon for "current setpoint filter"

Function diagrams (see SINAMICS S110 List Manual)

- 5710 Current setpoint filters

Overview of important parameters (see SINAMICS S110 List Manual)

- p1656 Activates current setpoint filter
- p1657 Current setpoint filter 1 type
- p1658 Current setpoint filter 1 denominator natural frequency
- p1659 Current setpoint filter 1 denominator damping
- p1660 Current setpoint filter 1 numerator natural frequency
- p1661Current setpoint filter 1 numerator damping
- ...
- p1666 Current setpoint filter 2 numerator damping
- p1699 Filter data transfer

7.1.8 Note about the electronic motor model

A model change takes place within the speed range p1752*(100%-p1756) and p1752. With induction motors with encoder, the torque image is more accurate in higher speed ranges; the effect of the rotor resistance and the saturation of the main field inductance are corrected. With synchronous motors with encoder, the commutation angle is monitored.

7.1.9 V/f control for diagnostics

Description

With V/f control, the motor is operated with an open control loop and does require speed control or actual current sensing, for example. Operation is possible with a small amount of motor data.

V/f control can be used to check the following:

- Power Module
- Power cable between Power Module and motor
- Motor
- DRIVE-CLiQ cable between the Power Module and motor
- Encoder and actual encoder value

The following motors can be operated with V/f control:

- Induction motors
- Synchronous motors

Note

In V/f mode, the calculated actual speed value is always displayed in r0063. The speed of the encoder (if installed) is displayed in r0061. If an encoder is not installed, r0061 displays "0".

Structure of V/f control

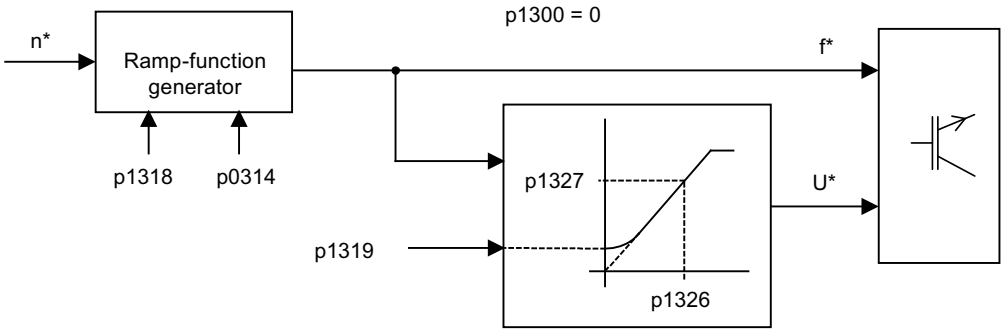

Figure 7-14 Structure of V/f control

Prerequisites for V/f control

1. First commissioning has been carried out:
   The parameters for V/f control have been initialized with appropriate values.

2. First commissioning has not been carried out:
   The following relevant motor data must be checked and, where necessary, corrected:
   - r0313 Motor pole pair number, actual (or calculated)
   - p0314 Motor pole pair number
   - p0341 Motor moment of inertia
   - p0342 Ratio between the total moment of inertia and that of the motor
   - p0640 Current limit
   - p1498[0...n] Load moment of inertia
   - p1520[0...n] CO: Torque limit, upper/motoring
   - p1521[0...n] CO: Torque limit, lower/regenerative
   - p1530[0...n] Motor mode power limit
   - p1531[0...n] Regenerative mode power limit
3. V/f control can now be commissioned.
   - p1318 V/f control ramp-up/ramp-down time
   - p1319 V/f control voltage at zero frequency
   - p1326 V/f control programmable characteristic frequency 4
   - p1327 V/f control programmable characteristic voltage 4
   - p1338[0...n] V/f control mode resonance damping gain
   - p1339[0...n] V/f control mode resonance damping filter time constant
   - p1349[0...n] V/f control mode resonance damping maximum frequency

Note

With synchronous motors, V/f control mode is normally only stable at low speeds. Higher speeds can induce vibrations.

Oscillation damping is activated on the basis of suitable default parameter values and does not require further parameterization in most applications. If you become aware of interference caused by a transient response, you have the option of gradually increasing the value of p1338 and evaluating how this affects your system.

Note

The drive can be ramped up to the current limit (p0640) relatively quickly without the need for extensive parameterization (when operating the drive with a variable moment of inertia, for example).

Note the following: Only the ramp-function generator stops when the current limit (p0640) is reached. This does not prevent the current from increasing even further. In view of this, the parameters you set must respect a safety margin relative to the current limits for the monitoring functions to prevent the drive from switching off (in the event of an overcurrent fault, for example).

Commissioning V/f control

1. Verify the preconditions for V/f control mode.
2. Set p0311 → Rated motor speed
3. Set p1317 = 1 → activates the function
4. Activate the enable signals for operation
5. Specify the speed setpoint

V/f characteristic

The speed setpoint is converted to the frequency specification taking into account the number of pole pairs. The synchronous frequency associated with the speed setpoint is output (no slip compensation).

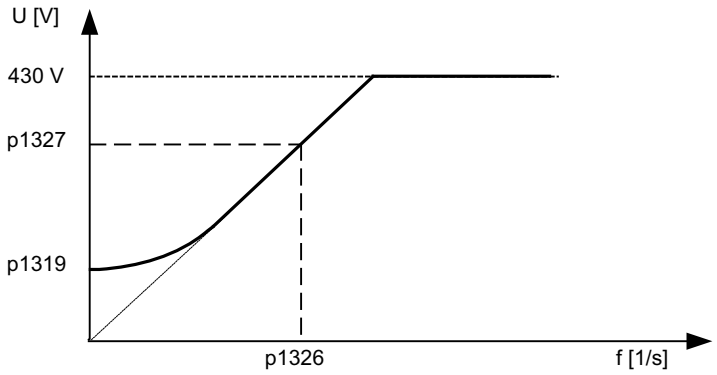

Figure 7-15 V/f characteristic

Function diagrams (see SINAMICS S110 List Manual)

- 5300 V/f control
- 5650 Vdc_max controller and Vdc_min controller

Overview of important parameters (see SINAMICS S110 List Manual)

- p0304 Motor rated voltage
- p0310 Motor rated frequency
- p0311 Motor rated speed
- r0313 Motor pole pair number, actual (or calculated)
- p0314 Motor pole pair number
- p0322 Maximum motor speed
- p0323 Maximum motor current
- p0341[0...n] Motor moment of inertia
- p0342[0...n] Ratio between the total moment of inertia and that of the motor

- p0640 Current limit
- p1082 Maximum speed
- p1317 V/f control activation
- p1318 V/f control ramp-up/ramp-down time
- p1319 V/f control voltage at zero frequency
- p1326 V/f control programmable characteristic frequency 4
- p1327 V/f control programmable characteristic voltage 4
- p1338[0...n] V/f control mode resonance damping gain
- p1339[0...n] V/f control mode resonance damping filter time constant
- p1345[0...n] DC brake proportional gain
- p1346[0...n] DC brake integral time
- p1349[0...n] V/f control mode resonance damping maximum frequency
- p1498[0...n] Load moment of inertia
- p1520[0...n] CO: Torque limit, upper/motoring
- p1521[0...n] CO: Torque limit, lower/regenerative
- p1530[0...n] Motor mode power limit
- p1531[0...n] Regenerative mode power limit

7.1.10 Optimizing the current and speed controller

General information

⚠ CAUTION

Controller optimization may only be performed by skilled personnel with a knowledge of control engineering.

The following tools are available for optimizing the controllers:

- "Function generator" in STARTER
- "Trace" in STARTER
- "Measuring function" in STARTER
- Measuring sockets on the Control Unit

Optimizing the current controller

The current controller is initialized when the system is commissioned for the first time and is adequately optimized for most applications.

Optimizing the speed controller

The speed controller is set in accordance with the motor moment of inertia when the motor is configured for the first time. The calculated proportional gain is set to approximately 30% of the maximum possible gain in order to minimize vibrations when the controller is mounted on the mechanical system of the machine for the first time.

The integral time of the speed controller is always preset to 10 ms.

The following optimization measures are necessary in order to achieve the full dynamic response:

- Increase the proportional gain Kp_n (p1460)
- Change the integral action time Tn_n (p1462)

Automatic controller setting of the speed controller (frequency response analysis) in STARTER

- The automatic speed controller setting has the following features:
  - Section identification using FFT analysis
  - Automatic setting of filters in the current setpoint arm, e.g. for damping resonances
  - Automatic setting of the controller (gain factor Kp, integral time Tn)
- The automatic controller settings can be verified with the measuring functions.

The "automatic controller setting" parameterization screen form is selected using the following symbol in the toolbar of the STARTER commissioning tool:

Figure 7-16 STARTER symbol for "automatic controller setting"

Example of measuring the speed controller frequency response

By measuring the speed controller frequency response and the control system, critical resonance frequencies can, if necessary, be determined at the stability limit of the speed control loop and dampened using one or more current setpoint filters. This normally enables the proportional gain to be increased (e.g. Kp_n = 3* default value).

After the Kp_n value has been set, the ideal integral action time Tn_n (e.g. reduced from 10 ms to 5 ms) can be determined.

Example of speed setpoint step change

A rectangular step change can be applied to the speed setpoint via the speed setpoint step change measuring function. The measuring function has preselected the measurement for the speed setpoint and the torque-generating current.

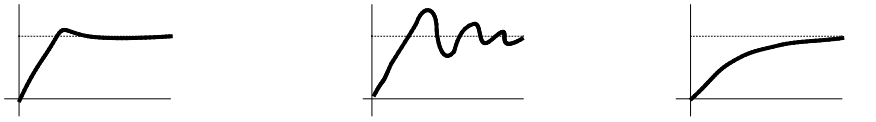

Kp_n is optimum	Kp_n is too high, overshoots.	Kp_n is too low, dampened transient response.
→ OK	→ Not OK	→ OK, not optimum

Figure 7-17 Setting the proportional gain Kp

Parameter overview

See "Speed controller".

7.1.11 Operation without an encoder

NOTICE
The operation of synchronous motors without an encoder must be verified in a test application. Stable operation in this mode cannot be guaranteed for every application. Therefore, the user will be solely responsible for the use of this operating mode.

Description

This allows operation without an encoder and mixed operation (with/without encoder). Encoderless operation with the motor model allows a higher dynamic response and greater stability than a standard drive with V/f control. Compared with a drive with an encoder, however, speed accuracy is lower and the dynamic response and smooth running features deteriorate.

Since the dynamic response in operation without an encoder is lower than in operation with an encoder, accelerating torque pre-control is implemented to improve the control dynamic performance. It controls, knowing the drive torque, and taking into account the existing torque and current limits as well as the load moment of inertia (motor moment of inertia: p0341*p0342 + load torque: p1498) the required torque for a demanded speed dynamic performance optimized from a time perspective.

Note

If the motor is operated with and without an encoder (e.g. p0491 not 0 or p1404 < p1082), the maximum current during operation without an encoder can be reduced via p0642 (reference value is p0640) in order to minimize interfering, saturation-related motor data changes during operation without an encoder.

A torque smoothing time can be parameterized via p1517 for the torque pre-control. The speed controller needs to be optimized for operation without an encoder due to the lower dynamic response. This can be carried out via p1470 (P gain) and p1472 (integral time).

In the low-speed range, the actual speed value, the orientation, and the actual flux can no longer be calculated during operation without an encoder due to the accuracy of the measured values and the parameter sensitivity of the process. For this reason, an open-loop current/frequency control is selected. The switchover threshold is parameterized via p1755 and the hysteresis via p1756.

To accept a high load torque even in the open-loop controlled range, the motor current can be increased via p1612. To do so, the drive torque (e.g. friction torque) must be known or estimated. An additional reserve of approx. 20% should also be added. In synchronous motors, the torque is converted to the current via the motor torque constant (p0316). In the lower speed range, the required current cannot be measured directly on the Power Module. The default setting is 50% (synchronous motor) or 80% (induction motor) of the motor rated current (p0305). When parameterizing the motor current (p1612), you must take into account the thermal motor load.

Note

Operation without an encoder is not permitted for vertical axes or similar. Operation without an encoder is not suitable for a higher-level closed-loop position control either.

The start behavior of synchronous motors from standstill can be improved further by parameterizing the pole position identification (p1982 = 1).

Behavior once pulses have been canceled

Once the pulses have been canceled in operation without an encoder, the current actual speed value of the motor can no longer be calculated. Once the pulses are enabled again, the system must search for the actual speed value.

p1400.11 can be used to parameterize whether the search is to begin with the speed setpoint (p1400.11 = 1) or with speed = 0.0 (p1400.11 = 0). Under normal circumstances, p1400.11 = 0 because the motor is usually started from standstill. If the motor is rotating faster than the changeover speed p1755 when the pulses are enabled, p1400.11 = 1 must be set.

If the motor is rotating and the start value for the search is that of the setpoint (p1400.11 = 1), the speed setpoint must be in the same direction as the actual speed before the pulses can be enabled. A large discrepancy between the actual and setpoint speed can cause a malfunction.

⚠ WARNING

Once the pulses have been canceled, no information about the motor speed is available. The computed actual speed value is then set to zero, which means that all actual speed value messages and output signals are irrelevant.

Switchover between closed-loop/open-loop operation and operation with/without encoder

Operation without an encoder is activated via parameter setting p1300 = 20. If p1300 = 20 or p1404 = 0, operation without an encoder is active across the entire speed range. If the speed value is less than the changeover speed p1755, the motor is operated in accordance with the current/frequency.

During operation with an encoder, a switchover can be made to operation without an encoder when the speed threshold p1404 is exceeded. If p1404 > 0 and p1404 < p1755, a switchover to operation without an encoder is not made until the speed exceeds p1755.

Operation without an encoder is displayed in parameter r1407.1.

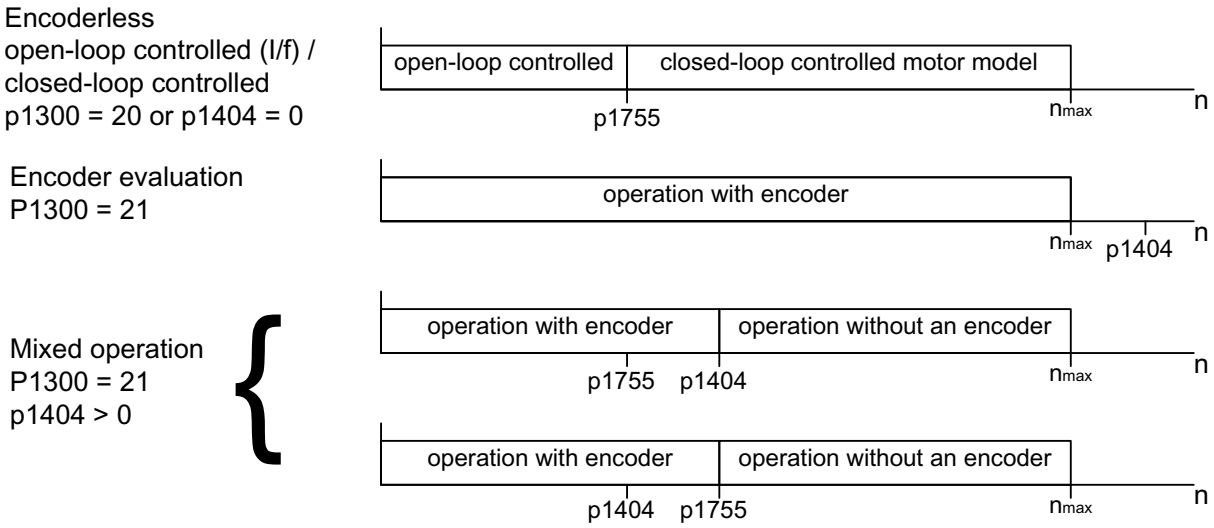

Figure 7-18 Area switchover

Note

In closed-loop control operating mode "Speed controller without encoder", a rotor position encoder is not required. Since a temperature monitor is not usually connected in this case either, this must be parameterized via p0600 = 0 (no sensor).

Series reactor

When high-speed special motors are used, or other low leakage induction motors, a series reactor may be required to ensure stable operation of the current controller.

The series reactor can be integrated via p0353.

Commissioning/optimization

1. Estimate the motor current p1612 on the basis of the mechanical conditions (I = M/kt).
2. Set Kn (p1470) and Tn (p1472) above I/f operation (> p1755). The load moment of inertia should be set to zero here (p1498 = 0), since this deactivates part of the torque pre-control.
3. Determine the load moment of inertia in the speed range above I/f operation (> p1755) by setting p1498 via a ramp response (e.g. ramp time 100 ms) and assessing the current (r0077) and model speed (r0063).

Function diagrams (see SINAMICS S110 List Manual)

- 5050 Kp_n-/Tn_n adaptation
- 5060 Torque setpoint, control type switchover
- 5210 Speed controller

Overview of important parameters (see SINAMICS S110 List Manual)

- p0341 Motor moment of inertia
- p0342 Ratio between the total moment of inertia and that of the motor
- p0353 Motor series inductance
- p0600 Motor temperature sensor for monitoring
- p0640 Current limit
- p0642 Encoderless current reduction
- p1300 Open-loop/closed-loop control operating mode
- p1400.11 Speed control configuration; encoderless operation actual speed value start value
- p1404 Encoderless operation changeover speed
- r1407.1 CO/BO: Status word speed controller; encoderless operation active
- p1470 Speed controller encoderless operation P-gain
- p1472 Speed controller encoderless operation integral-action time
- p1498 Load moment of inertia
- p1517 Accelerating torque smoothing time constant
- p1612 Current setpoint, open-loop control, encoderless
- p1755 Motor model without encoder, changeover speed
- p1756 Motor model changeover speed hysteresis

7.1.12 Motor data identification

Description

Motor data identification (MotID) provides a means of determining motor data (of third-party motors, for example). The drive system must have been commissioned for the first time as basis for using MotID. To do this, either the electrical motor data (motor data sheet) or the rating plate data must be entered and the calculation of the motor/control parameters (p0340) must have been completed.

Commissioning involves the following steps:

- Enter the motor data or the rating plate data and the encoder data
- Complete calculation of the motor and control data as starting value for the MotID (p0340 = 3, if motor data, p0340 = 1, if rating plate data were entered)
- Carry out a static measurement (p1910)
- For synchronous motors: Carry out an angular commutation calibration (p1990) and if required, fine synchronization (refer to r1992)
- Carry out a rotating measurement (p1960)

  Before starting the rotating measurement, the speed controller setting should be checked and optimized (p1460, p1462 and p1470, p1472).

  It is preferable if the rotating MotID is carried out with the motor de-coupled from the mechanical system. This therefore means that only the motor moment of inertia is determined. The total moment of inertia with mechanical system can be subsequently identified with p1959 = 4 and p1960 = 1. The stress on the mechanical system can be reduced by parameterizing the ramp-up time (p1958) and/or using a speed limit (p1959.14/p1959.15) or using the current and speed limit. The higher the selected ramp-up time, the less accurate the moment of inertia determined.

  Note

  Completion of the individual identification runs can be read via parameters r3925 to r3928.

The enable signals OFF1, OFF2, OFF3 and "enable operation" remain effective and can be interrupt the motor identification routine.

If there is an extended setpoint channel (r0108.08 = 1), parameters p1959.14 = 0 and p1959.15 = 0 and a direction of rotation limit (p1110 or p1111) is active there, then this is observed at the instant of the start via p1960. For p1958 = -1, the ramp-up and ramp-down time of the setpoint channel (p1120 and p1121) are also used for the MotID.

Note

If a ramp-up/ramp-down time or one direction of rotation limit is activated, parts of the motor data identification routine cannot be carried out. For other parts of the motor data identification routine, the accuracy of the results is diminished because a ramp-up/ramp-down time is selected. If possible, p1958 should be 0 and no direction of rotation limit selected (p1959.14 = 1 and p1959.15 = 1).

⚠DANGER

The stationary MotID can result in slight movement of up to 210 degrees electrical.

For the rotating motor data identification routine, motor motion is initiated capable of reaching the maximum speed (p1082) and the motor torque corresponding to the maximum current (p0640).

The rotating measurement should be carried out with a motor running at no load (de-coupled from the mechanical system) in order to prevent damage/destruction to the load or be influenced by the load. If the motor cannot be de-coupled from the mechanical system, then the stress on the mechanical system can be reduced by parameterizing the ramp-up time (p1958) and/or using a speed limit (p1959.14/p1959.15) or using the current and speed limit.

If a mechanical distance limit has been set, you are advised not to carry out the rotating measurement.

The emergency shutdown functions must be fully operational during commissioning.

To protect the machines and personnel, the relevant safety regulations must be observed.

Motor data

Motor data input requires the following parameters:

Table 7- 8 Motor data

Induction motor	Permanent-magnet synchronous motor
• p0304 Motor rated voltage • p0305 Motor rated current • p0307 Motor rated power • p0308 Motor rated power factor • p0310 Motor rated frequency • p0311 Motor rated speed • p0320 Motor rated magnetizing current • p0322 Maximum motor speed • p0350 Motor stator resistance, cold • p0353 Motor series inductance • p0354 Motor rotor resistance, cold • p0356 Motor stator leakage inductance • p0358 Motor rotor leakage inductance • p0360 Motor magnetizing inductance • p0400ff Encoder data	• p0305 Motor rated current • p0311 Motor rated speed • p0314 Motor pole pair number • p0316 Motor torque constant • p0322 Maximum motor speed • p0323 Maximum motor current • p0341 Motor moment of inertia • p0350 Motor stator resistance, cold • p0353 Motor series inductance • p0356 Motor stator leakage inductance • p0400ff Encoder data

Rating plate data

Input of the rating plate data requires the following parameters:

Table 7- 9 Rating plate data

Induction motor	Permanent-magnet synchronous motor
• p0304 Motor rated voltage • p0305 Motor rated current • p0307 Motor rated power • p0308 Motor rated power factor • p0310 Motor rated frequency • p0311 Motor rated speed • p0322 Maximum motor speed • p0353 Motor series inductance • p0400ff Encoder data	• p0304 Motor rated voltage • p0305 Motor rated current • p0307 Motor rated power (alternative p0316) • p0311 Motor rated speed • p0314 Motor pole pair number or p0315 Motor pole pair width • p0322 Maximum motor speed • p0323 Maximum motor current • p0353 Motor series inductance • p0400ff Encoder data

Since the rating plate data contains the initialization values for identification, you must ensure that it is entered correctly and consistently to enable the above data to be determined.

Parameters to control the MotID

The following parameters influence the MotID:

Table 7- 10 Parameters for control

Static measurement (motor data identification)	Rotating measurement
• p0640 Current limit • p1215 Motor holding brake configuration • p1909 Motor data identification control word • p1910 Motor data identification, stationary • p1959.14/.15 Positive/negative direction permitted*	• p0640 Current limit • p1082 Maximum speed • p1958 motor data identification ramp-up/ramp-down time • p1959 Rotating measurement configuration • p1960 Rotating measurement selection
Note: If a brake is being used and is operational (p1215 = 1, 3), then the stationary measurement with closed brake is carried out. If possible (e.g. no hanging/suspended axis), we recommend that the brake is opened before the MotID (p1215 = 2). This also means that the encoder size can be adjusted and the angular commutation calibrated. *The p1959 setting has the following effects on the rotational direction parameter p1821: Positive direction permitted, with setting p1821=0 means: Clockwise direction of rotation Negative direction permitted, with setting p1821=1 means: Counter-clockwise direction of rotation	

7.1.12.1 Motor data identification - induction motor

Induction motor

The data are identified in the gamma equivalent circuit diagram and displayed in r19xx. The motor parameters p0350, p0354, p0356, p0358 and p0360 taken from the MotID refer to the T equivalent circuit diagram of the induction machine and cannot be directly compared. This is the reason that an r parameter is listed in the table, which displays the parameterized motor parameters in the gamma equivalent circuit diagram.

Table 7- 11 Data determined using p1910 for induction motors (stationary measurement)

Determined data (gamma)	Data that are accepted (p1910 = 1)
r1912 Identified stator resistance	p0350 Motor stator resistance, cold + p0352 Cable resistance
r1913 Rotor time constant identified	r0384 Motor rotor time constant/damping time constant, d axis
r1915 Stator inductance identified	-
r1925 Threshold voltage identified	-
r1927 Rotor resistance identified	r0374 Motor resistance cold (gamma) p0354
r1932 d Inductance	r0377 Motor leakage inductance, total (gamma) p0353 Motor series inductance p0356 Motor leakage inductance p0358 Motor leakage inductance p1715 Current controller P gain p1717 Current controller integral action time
r1934 q Inductance identified	-
r1936 Magnetizing inductance identified	r0382 Motor main inductance, transformed (gamma) p0360 Motor main inductance p1590 Flux controller P gain p1592 Flux controller integral action time
r1973 Encoder pulse number identified	-
Note: The encoder pulse number is only determined very imprecisely and is only suitable for making rough checks (p0408). The sign is negative if inversion is required (p0410.0).	
-	p0410 Encoder inversion actual value
Note: If the encoder inversion is changed using MotID, fault F07993 is output, which refers to a possible change in the direction of rotation and can only be acknowledged by p1910 = -2.	

Table 7- 12 Data determined using p1960 for induction motors (rotating measurement)

Determined data (gamma)	Data that are accepted (p1960 = 1)
r1934 q Inductance identified	-
r1935 q Inductance identification current	
Note: The q inductance characteristic can be used as basis to manually determine the data for the current controller adaptation (p0391, p0392 and p0393).	
r1936 Magnetizing inductance identified	r0382 Motor main inductance, transformed (gamma) p0360 Motor main inductance p1590 Flux controller P gain p1592 Flux controller integral action time
r1948 Magnetizing current identified	p0320 Motor rated magnetizing current
r1962 Saturation characteristic magnetizing current identified	-
r1963 Saturation characteristic stator inductance identified	-
Note: The magnetic design of the motor can be identified from the saturation characteristic.	
r1969 Moment of inertia identified	p0341 Motor moment of inertia * p0342 Ratio between the total moment of inertia and that of the motor + p1498 Load moment of inertia
r1973 Encoder pulse number identified	-
Note: The encoder pulse number is only determined very imprecisely and is only suitable for making rough checks (p0408). The sign is negative if inversion is required (p0410.0).	

7.1.12.2 Motor data identification - synchronous motor

Synchronous motor

Table 7- 13 Data determined using p1910 for synchronous motors (stationary measurement)

Determined data	Data that are accepted (p1910 = 1)
r1912 stator resistance identified	p0350 motor stator resistance, cold + p0352 cable resistance
r1925 threshold voltage identified	-
r1932 d inductance	p0356 motor stator leakage inductance + p0353 motor series inductance p1715 current controller P gain p1717 current controller integral-action time
r1934 q inductance identified	-
r1950 Voltage emulation error voltage values	p1952 Voltage emulation error, final value
r1951 Voltage emulation error, current values	p1953 Voltage emulation error, current offset
Note regarding r1950 to p1953: Active when the function module "extended torque control" is activated and activated compensation of the voltage emulation error (p1780.8 = 1).	
r1973 Encoder pulse number identified	-
Note: The encoder pulse number is only determined very imprecisely and is only suitable for making rough checks (p0408). The sign is negative if inversion is required (p0410.0).	
r1984 Pole position identification angular difference	p0431 Angular commutation offset
Note: r1984 indicates the difference of the angular commutation offset before being transferred into p0431.	
-	p0410 Encoder inversion actual value
Note: If the encoder inversion is changed using MotID, fault F07993 is output, which refers to a possible change in the direction of rotation and can only be acknowledged by p1910 = -2.	

Table 7- 14 Data determined using p1960 for synchronous motors (rotating measurement)

Determined data	Data that are accepted (p1960 = 1)
r1934 q inductance identified	-
r1935 q inductance identification current	-
Note: The q inductance characteristic can be used as basis to manually determine the data for the current controller adaptation (p0391, p0392 and p0393).	
r1937 torque constant identified	p0316 motor torque constant
r1938 voltage constant identified	p0317 motor voltage constant
r1939 reluctance torque constant identified	p0328 motor reluctance torque constant
r1947 optimum load angle identified	p0327 optimum motor load angle
r1969 moment of inertia identified	p0341 Motor moment of inertia * p0342 ratio between the total moment of inertia and that of the motor + p1498 load moment of inertia
r1973 Encoder pulse number identified	-
Note: The encoder pulse number is only determined very imprecisely and is only suitable for making rough checks (p0408). The sign is negative if inversion is required (p0410.0).	
r1984 Pole position identification angular difference	p0431 Angular commutation offset
Note: r1984 indicates the difference of the angular commutation offset before being transferred into p0431.	

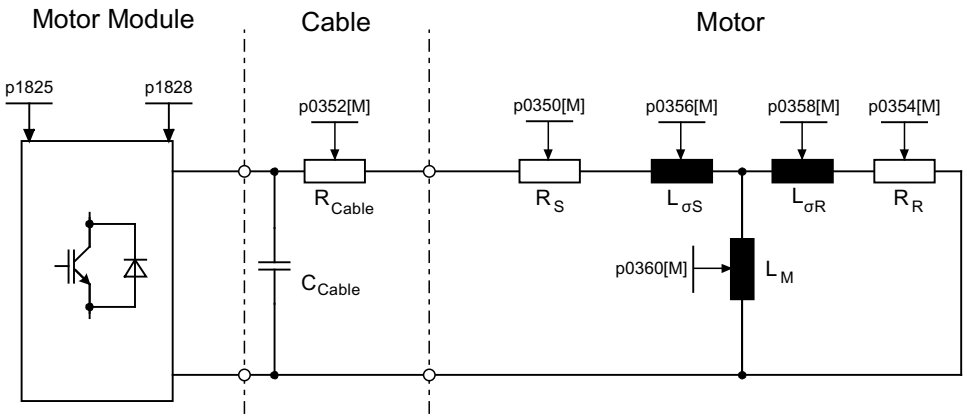

Figure 7-19 Equivalent circuit diagram for induction motor and cable

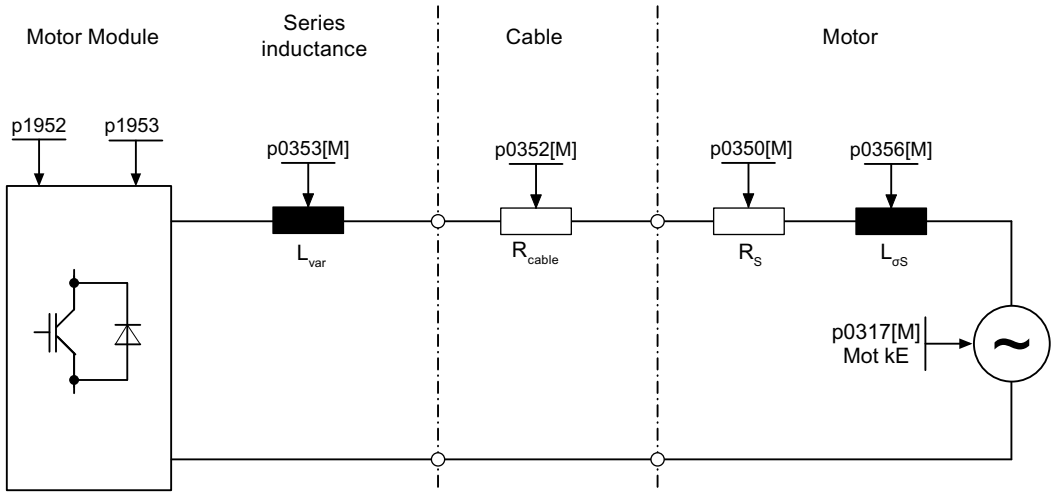

Figure 7-20 Equivalent circuit diagram for synchronous motor and cable

Overview of important parameters (see SINAMICS S110 List Manual)

- r0047 Status identification

Standstill measurement

- p1909 Motor data identification control word
- p1910 Motor data identification, stationary

Rotating measurement

- p1958 Motor data identification ramp-up/ramp-down times
- p1959 Rotating measurement configuration
- p1960 Rotating measurement selection

7.1.13 Pole position identification

Description

For synchronous motors, the pole position identification determines its electrical pole position, that is required for the field-oriented control. Generally, the electrical pole position is provided from a mechanically adjusted encoder with absolute information. In this case, pole position identification is not required. For the following encoder properties, pole position identification is not required:

- Absolute encoder (e.g. EnDat, DRIVE-CLiQ encoder)
- Encoder with C/D track and pole pair number ≤ 8
- Hall sensor
- Resolver with a multiple integer ratio between the motor pole pair number and the encoder pole pair number
- Incremental encoder with a multiple integer ratio between the motor pole pair number and the encoder pulse number

The pole position identification is used for:

- Determining the pole position (p1982 = 1)
- Determining the angular commutation offset during commissioning (p1990 = 1)
- Plausibility check for encoders with absolute information (p1982 = 2)

⚠ WARNING
When the motors are not braked, the motor rotates or moves as a result of the current impressed during the measurement. The magnitude of the motion depends on the magnitude of the current and the moment of inertia of the motor and load.

Notes regarding pole position identification

The relevant technique can be selected using parameter P1980. The following techniques are available for pole position identification:

- Saturation-based 1st+ 2nd harmonics (p1980 = 0)
- Saturation-based 1st harmonics (p1980 = 1)
- Saturation-based, two-stage (p1980 = 4)
- Saturation-based (p1980 = 10)

The following supplementary conditions apply to the saturation-based motion technique:

- You can use the techniques for both braked and non-braked motors.
- It can only be used for a speed setpoint = 0 or from standstill.
- The currents specified (p0325, p0329) must be sufficiently large to provide a meaningful measuring result.

- For motors without iron, the pole position cannot be identified using the saturation-based technique.
- With 1FK7 motors, two-stage procedures must not be used (p1980 = 4). The value in p0329, which is set automatically, must not be reduced.

For the motion-based technique, the following supplementary conditions apply:

- The motor must be free to move and it may not be subject to external forces (no hanging/suspended axes)
- It can only be used for a speed setpoint = 0 or from standstill.
- If there is a motor brake, then this must be open (p1215 = 2).
- The specified current magnitude (p1993) must move the motor by a sufficient amount.

⚠WARNING

Before using the pole position identification routine, the control sense of the speed control loop must be corrected (p0410.0).

For rotating motors, in encoderless operation with a small positive speed setpoint (e.g. 10 RPM), the speed actual value (r0061) and the speed setpoint (r1438) must have the same sign.

Pole position determination with zero marks

The pole position identification routine provides coarse synchronization. If zero marks exist, the pole position can be automatically compared with the zero mark position once the zero mark(s) have been passed (fine synchronization). The zero mark position must be either mechanically or electrically (p0431) calibrated. If the encoder system permits this, then we recommend fine synchronization (p0404.15 = 1). This is because it avoids measurement spread and allows the determined pole position to be additionally checked.

Suitable zero marks are:

- One zero mark in the complete traversing range
- Equidistant zero marks whose relevant position to the commutation are identical
- Distance-coded zero marks

Determining a suitable technique for the pole position identification routine

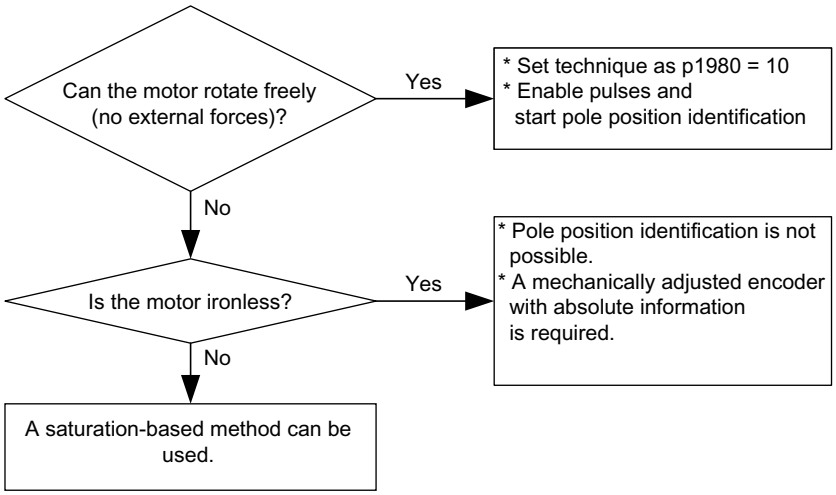

Figure 7-21 Selecting the appropriate technique

Angular commutation offset commissioning support (p1990)

The function for determining the commutation angle offset is activated via p1990=1. The commutation angle offset is entered in p0431. This function can be used in the following cases:

- Single calibration of the pole position for encoders with absolute information (exception: The Hall sensor must always be mechanically adjusted.)
- Calibrating the zero mark position for fine synchronization

Table 7- 15 Mode of operation of p0431

	Incremental without zero mark	Incremental with one zero mark	Incremental with distance-coded zero marks	Absolute encoder
C/D track	p0431 shifts the commutation with respect to the C/D track	p0431 shifts the commutation with respect to the C/D track and zero mark	Currently not available	Not permitted
Hall sensor	p0431 does not influence the Hall sensor. The Hall sensor must be mechanically adjusted.	p0431 does not influence the Hall sensor. p0431 shifts the commutation with respect to the zero mark	p0431 does not influence the Hall sensor. p0431 shifts the commutation with respect to the absolute position (after two zero marks have been passed)	Not permitted
Pole position identification	p0431 no effect	p0431 shifts the commutation with respect to the zero mark	p0431 shifts the commutation with respect to the absolute position (after two zero marks have been passed)	p0431 shifts the commutation with respect to absolute position

Note

When fault F07414 occurs, p1990 is automatically started; if p1980 is not equal to 99 and p0301 does not refer to a catalog motor with an encoder that is adjusted in the factory.

Overview of important parameters (see SINAMICS S110 List Manual)

- p0325[0...n] Motor pole position identification current 1st phase
- p0329[0...n] Motor pole position identification current
- p0404.15 Commutation with zero mark
- p0431 Angular commutation offset
- p1980[0...n] Pole position identification procedure
- p1981[0...n] Pole position identification maximum movement
- p1982[0...n] Pole position identification selection
- p1983 Pole position identification test
- r1984 Pole position identification angular difference
- r1985 Pole position identification saturation curve
- r1987 Pole position identification trigger curve
- p1990 Pole position identification commutation angle offset commissioning
- r1992 Pole position identification diagnostics
- p1993 Pole position identification current, motion based
- p1994 Pole position identification rise time motion based
- p1995 Pole position identification motion based P gain
- p1996 Pole position identification motion based integral action time
- p1997 Pole position identification motion based smoothing time

7.1.14 Vdc control

Description

Vdc control can be activated if overvoltage or undervoltage is present in the supply voltage. This prevents a fault from occurring due to the supply voltage and ensures that the drive is always ready to use.

This function is activated by means of the configuration parameter (p1240). It can be activated if an overvoltage or undervoltage is present. The torque limit of the motor at which the Vdc controller is active can be affected if discrepancies in the supply voltage are significant enough. The motor may no longer be able to maintain its setpoint speed or the acceleration/braking phases could be prolonged.

The Vdc controller is an automatic P controller that influences the torque limits. It only intervenes when the supply voltage approaches the "upper threshold" (p1244) or "lower threshold" (p1248) and the corresponding controller is activated via the configuration parameter (p1240).

An application for the Vdc controller is, for example, as a safety measure in the event of a power failure (Vdc_min and Vdc_max controller).

The voltage limit values for Vdc control also have an impact on V/f control, although the dynamic response of Vdc control is slower in this case.

Description of Vdc_min control (p1240 = 2, 3)

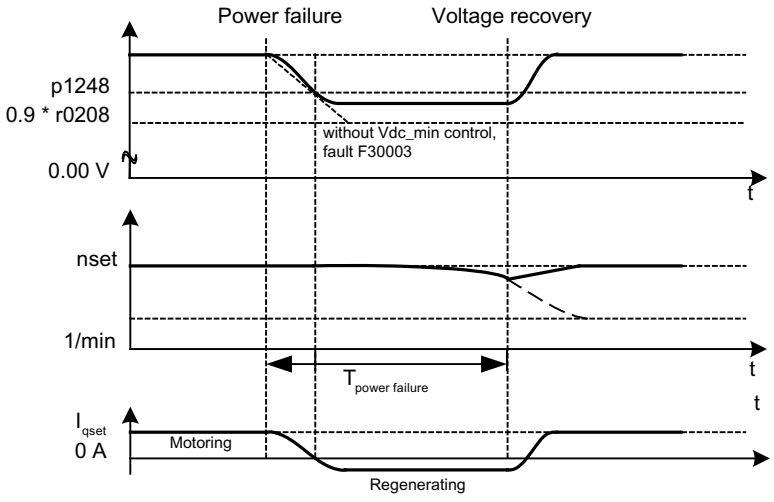

Figure 7-22 Switching Vdc_min control on/off (kinetic buffering)

In the event of a power failure, the Power Module will no longer be able to maintain the supply voltage, particularly if the motor is drawing active power. To maintain the supply voltage in the event of a power failure (e.g. for a controlled emergency retraction), the Vdc_min controller can be activated for the drive. If the voltage threshold set in p1248 is undershot, this drive will be decelerated so that its kinetic energy can be used to maintain the supply voltage. The threshold should be considerably higher than the trip threshold of the motor (recommendation: 50 V below the supply voltage). When the power supply is restored, the Vdc controller is automatically deactivated and the drive will ramp back up to the speed setpoint. If the supply voltage cannot be restored, the power supply will fail once the kinetic energy of the drive has been exhausted with an active Vdc_min controller.

Note

You must make sure that the converter is not disconnected from the power supply. It could become disconnected, for example, if the line contactor drops out. The line contactor would need to have an uninterruptible power supply (UPS), for example.

Description of Vdc_min control without braking (p1240 = 8, 9)

As with p1240 = 2, 3, however, active motor braking can be prevented by a reduction in the supply voltage. The effective upper torque limit must not be less than the torque limit offset (p1532). The motor does not switch to regenerative mode and no longer draws any active power from the DC link.

Description of Vdc_max control (p1240 = 1, 3)

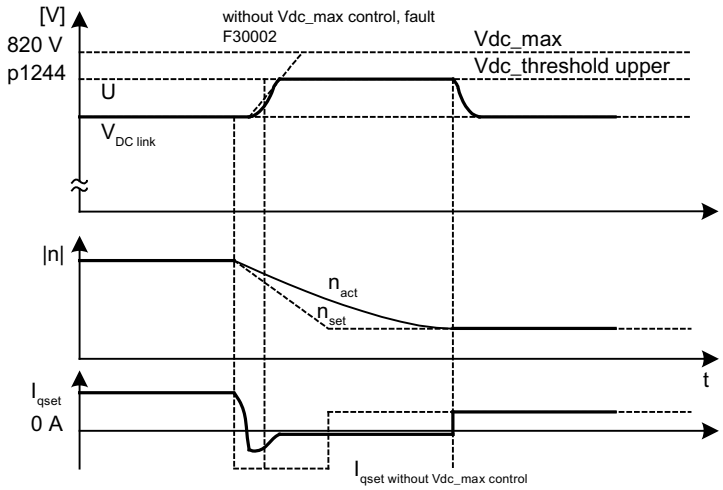

Figure 7-23 Switching-in/switching-out the Vdc_max control

In the event of a power failure, the voltage can increase until it reaches the shutdown threshold when the drive is decelerated. The Vdc_max controller can be activated to prevent the system from shutting down due to overvoltage. The Vdc_max controller is normally activated for drives that have to decelerate/accelerate high levels of kinetic energy themselves. When the overvoltage threshold in p1244 is reached (recommended setting: 50 V higher than the supply voltage), the braking torque of the drive with an active Vdc_max controller is reduced by shifting the torque limit. In this way, the drive feeds back the same amount of energy that is assimilated as a result of losses or consumers, thereby minimizing the braking time.

Description of Vdc_max control without acceleration (p1240 = 7, 9)

As with p1240 = 1, 3, if the drive must not be accelerated by means of an increase in the supply voltage, acceleration can be prevented by setting p1240 = 7, 9. The effective lower torque limit must not be greater than the torque limit offset (p1532).

Description of Vdc controller monitoring functions (p1240 = 4, 5, 6)

In the event of a power failure, the supply voltage can increase until it reaches the shutdown threshold when the drive is decelerated. To ensure that uncritical drives do not attempt to draw power from the supply voltage in the event of a power failure, such drives can be switched off by a fault (F07404) with a parameterizable voltage threshold (p1244). This is carried out by activating the Vdc_max monitoring function (p1240 = 4, 6).

Function diagrams (see SINAMICS S110 List Manual)

- 5650 Vdc_max controller and Vdc_min controller
- 5300 V/f control

Overview of important parameters (see SINAMICS S110 List Manual)

Adjustable parameters

- p1240 Vdc controller or Vdc monitoring configuration
- p1244 DC link voltage threshold, upper
- p1248 DC link voltage threshold, lower
- p1250 Vdc controller proportional gain

Display parameters

- r0056.14 Vdc_max controller active
- r0056.15 Vdc_min controller active

7.1.15 Travel to fixed stop

Description

This function can be used to move a motor to a fixed stop at a specified torque without a fault being signaled. When the stop is reached, the specified torque is built up and remains applied.

The desired torque derating is brought about by scaling the upper/motor-mode torque limit and the lower/regenerative-mode torque limit.

Application examples

- Screwing parts together with a defined torque.
- Moving to a mechanical reference point.

Signals

When PROFIBUS telegrams 2 to 4 are used, the following are automatically interconnected:

- Control word 2, bit 8
- Status word 2, bit 8

Also with PROFIdrive telegrams 102 and 103:

- Message word, bit 1
- Process data M_red to the scaling of the torque limit

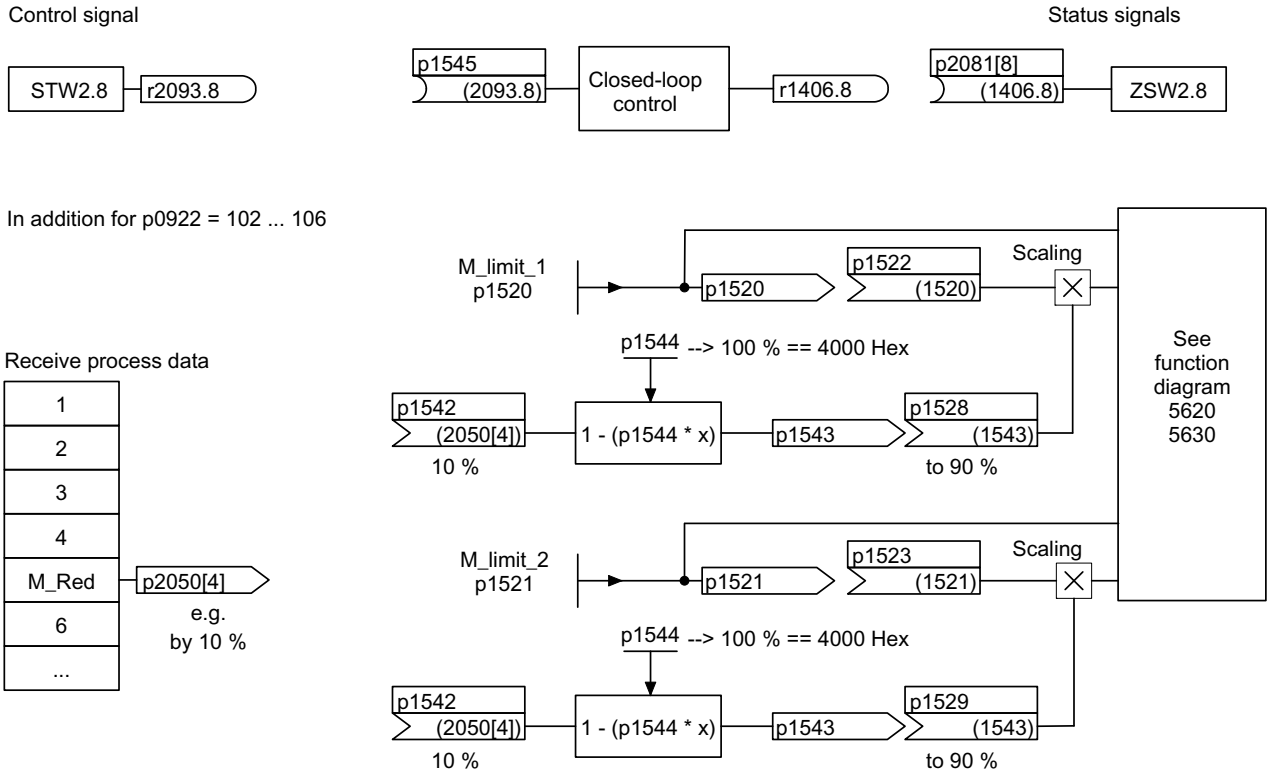

Figure 7-24 Signals for "Travel to fixed stop"

When PROFIdrive telegrams 2 to 4 are used, no torque reduction is transmitted. When the "Travel to fixed stop" function is activated, the motor ramps up to the torque limits specified in p1520 and p1521. If the torque has to be reduced, telegrams 102 and 103, for example, can be used for transmission. Another option would be to enter a fixed value in p2900 and interconnect it to the torque limits p1528 and p1529.

Signal chart

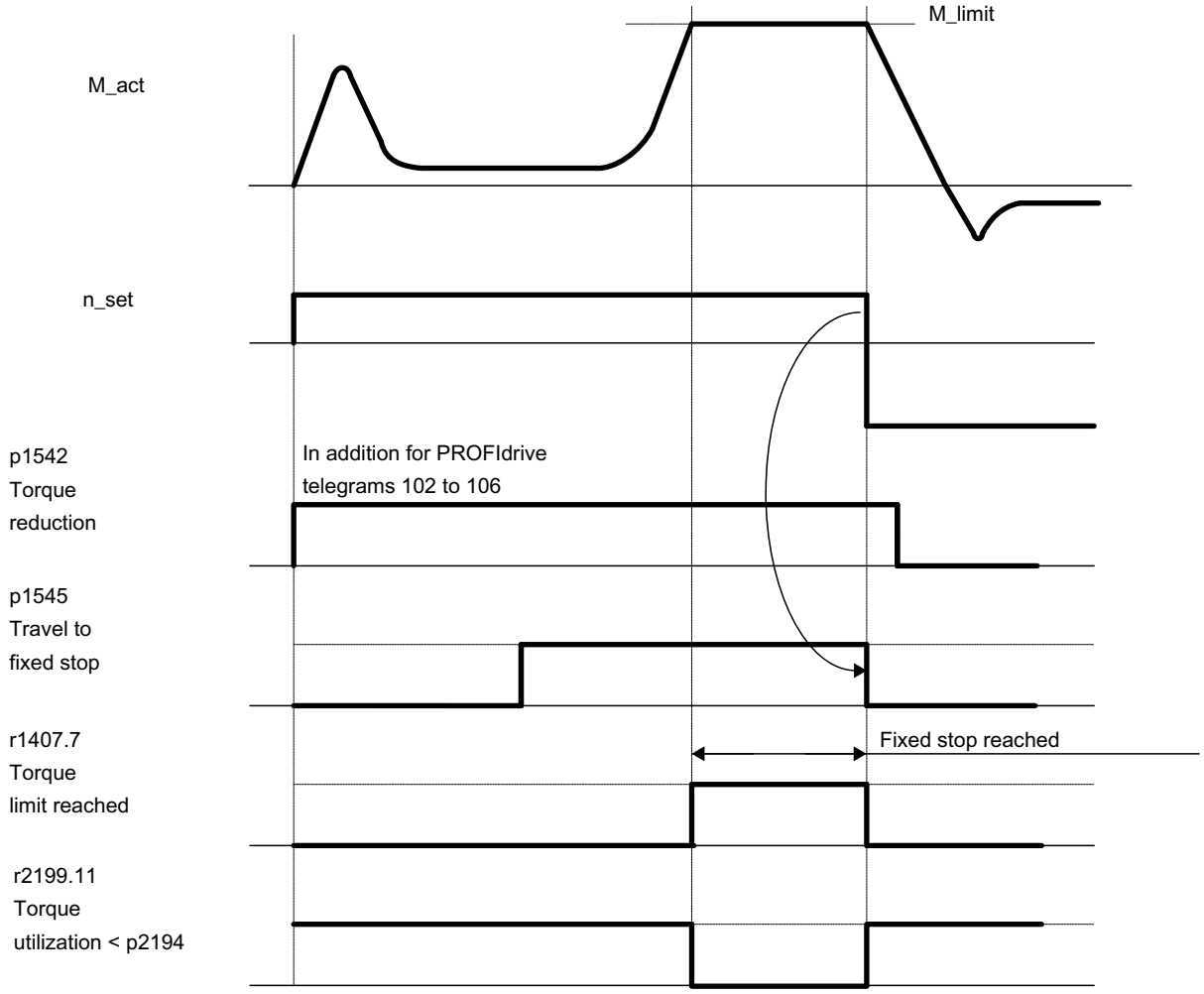

Figure 7-25 Signal chart for "Travel to fixed stop"

Commissioning for PROFIdrive telegrams 2 to 4

1. Activate travel to fixed stop.
   Set p1545 = "1".

2. Set the required torque limit.

   Example:
   p1400.4 = "0" → upper or lower torque limit
   p1520 = 100 Nm → effective in upper positive torque direction
   p1521 = –1500 Nm –→ effective in lower negative torque direction

3. Run motor to fixed stop.

   The motor runs at the set torque until it reaches the stop and continues to work against the stop until the torque limit has been reached, this status being indicated in status bit

   r1407.7 "Torque limit reached".

Control and status messages

Table 7- 16 Control: Travel to fixed stop

Signal name	Internal control word STW n_ctrl	Binector input	PROFIdrive p0922 and/or p2079
Activate travel to fixed stop	8	p1545 Activate travel to fixed stop	STW2.8

Table 7- 17 Status message: Travel to fixed stop

Signal name	Internal status word	Parameter	PROFIdrive p0922 and/or p2079
Travel to fixed stop active	-	r1406.8	ZSW2.8
Torque limits reached	ZSW n_ctrl.7	r1407.7	ZSW1.11 (inverted)
Torque utilization < torque threshold value 2	ZSW monitoring functions 3.11	r2199.11	MESSAGEW.1

Function diagrams (see SINAMICS S110 List Manual)

- 5610 Torque limiting/reduction/interpolator
- 5620 Motor/generator torque limit
- 5630 Upper/lower torque limit
- 8012 Torque messages, motor blocked/stalled

Overview of important parameters (see SINAMICS S110 List Manual)

- p1400[0...n] Speed control configuration
- r1407.7 BO: Torque limit reached
- p1520[0...n] CO: Torque limit, upper/motoring
- p1521[0...n] CO: Torque limit, lower/regenerative
- p1522[0...n] CI: Torque limit, upper/motoring
- p1523[0...n] CI: Torque limit, lower/regenerative
- r1526 Torque limit, upper/motoring without offset
- r1527 Torque limit, lower/regenerative without offset
- p1532[0...n] Torque limit offset
- p1542[0...n] CI: Travel to fixed stop, torque reduction
- r1543 CO: Travel to fixed stop, torque scaling
- p1544 Travel to fixed stop, evaluate torque reduction
- p1545[0...n] BI: Activate travel to fixed stop
- p2194[0...n] Torque threshold 2
- p2199.11 BO: Torque utilization < torque threshold value 2

7.1.16 Vertical axes

Description

With a vertical axis without mechanical weight compensation, electronic weight compensation can be set by offsetting the torque limits (p1532). The torque limits specified in p1520 and p1521 are shifted by this offset value.

The offset value can be read in r0031 and transferred in p1532.

To reduce compensation once the brake has been released, the torque offset can be interconnected as a supplementary torque setpoint (p1513). In this way, the holding torque is set as soon as the brake has been released.

Function diagrams (see SINAMICS S110 List Manual)

- 5060 Torque setpoint, control type switchover
- 5620 Motor/generator torque limit
- 5630 Upper/lower torque limit

Overview of important parameters (see SINAMICS S110 List Manual)

- r0031 Actual torque smoothed
- p1513 CI: Supplementary torque 2
- p1520 CO: Torque limit, upper/motoring
- p1521 CO: Torque limit, lower/regenerative
- p1532 CO: Torque limit, offset

7.1.17 Variable signaling function

Description

The variable signaling function can be used to monitor BICO sources and parameters (with the attribute "traceable") for violation of an upper or lower threshold value (p3295).

A hysteresis (p3296) can be specified for the threshold value and a pull-in or drop-out delay (p3297/8) can be specified for the output signal (p3294).

The setting of a hysteresis results in a tolerance band around the threshold value. If the upper threshold value is exceeded the output signal is set to 1, if it drops below the lower threshold value the output signal is reset to 0.

After the configuration is completed, the variable signaling function must be activated with p3290.0.

Example 1:

Heating should be switched on depending on the temperature. For this the analog signal of an external sensor is connected with the variable signaling function. A temperature threshold and a hysteresis is defined to prevent the heating from switching on and off constantly.

Example 2:

A process variable "pressure" is to be monitored, whereby a temporary overpressure is tolerated. For this the output signal of an external sensor is connected with the variable signaling function. The pressure thresholds and a pull-in delay are set as tolerance time.

When the output signal of the variable signaling function is set, bit 5 in message word MELDW is set during cyclic communication. The message word MELDW is a component of the telegrams 102, 103, 110, 111.

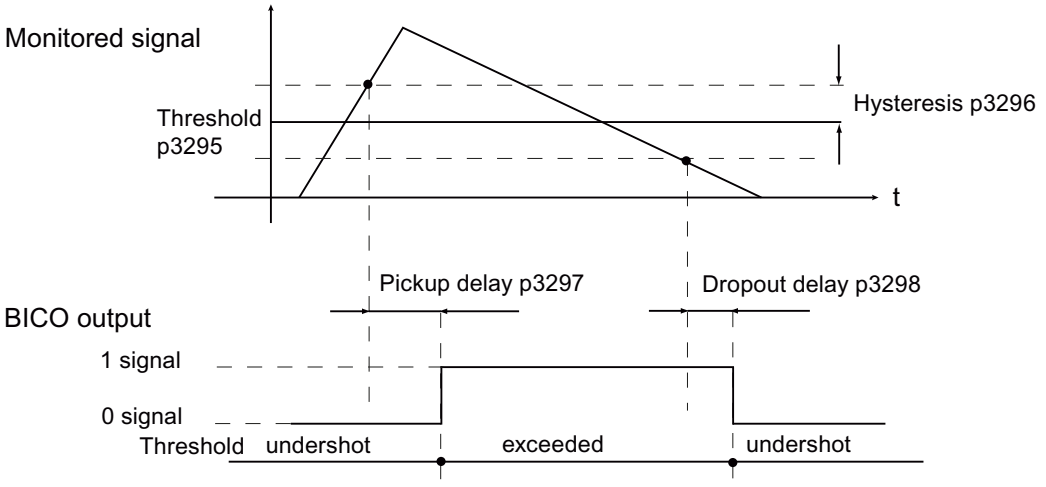

Figure 7-26 Variable signaling function

Function diagram (see SINAMICS S110 List Manual)

- 5301 Servo control - variable signaling function

Overview of important parameters (see SINAMICS S110 List Manual)

- p3290 Variable signaling function start
- p3291 Variable signaling function signal source
- p3292 Variable signaling function signal source address
- p3293 Variable signaling function signal source data type
- p3294 Variable signaling function output signal
- p3295 Variable signaling function threshold value
- p3296 Variable signaling function hysteresis
- p3297 Variable signaling function pull-in delay [ms]
- p3298 Variable signaling function drop-out delay [ms]
- p3299 Variable signaling function sampling time

Note:

The variable signaling function works with an accuracy of 8 ms (also to be taken into account for pull-in and drop-out delay).

7.1.18 Central probe evaluation

Description

Frequently, motion control systems have to detect and save the positions of drive axes at an instant in time defined by an external event. For example, this external event may be the signal edge of a probe. In this case, it may be necessary to evaluate several probes or save the position actual values of several axes, triggered by a probe event.

For the central probe evaluation, the instant in time of the probe signal is detected and saved by a central function. From the available sample values of the position signals of the various axes, the position actual values at the probe instant are interpolated with respect to time in the control. For SINAMICS S, two techniques have been implemented:

- For the probe evaluation **with handshake**, for each probe and positive and/or negative probe edge, up to 1 measured value is evaluated each communication cycle / each four DP cycles.
- With a parameterizable probe evaluation **without handshake**, the evaluation frequency of the probe edges can be increased up to the communication frequency/application frequency of the probe evaluation (= SERVO cycle of the higher-level control).

  Precondition: T_DP = T_MACP (i.e. cycle ratio = 1:1, no cycle reduction ratio is possible).

Common features for central measuring with and without handshake

Both measuring techniques have the following points in common:

- PROFIBUS telegrams
- Synchronization between the control and drive as a precondition for measuring.
- System time: Resolution (0.25 µs), maximum value (16 ms)
- Time stamp: Format (drive increments, NC decrements)
- Monitoring functions (sign of life)
- Fault messages
- Incrementing

In the interface, the value "0" is not a valid time format and is used to express that a measured value is not available.

Central measuring with handshake

- Evaluation technique with handshake, as long as p0684 = 0.
- Transfer, control word probe (BICO p0682 to PZD3) at the instant To in the MAP cycle.
- A measurement is activated with a 0/1 transition of the control bit for falling or rising edge in the probe control word.
- If a measurement is activated, a check is made in the DP cycle as to whether a measured value is present.
- If the check indicates that there is a measured value, then the time stamp is entered into either p0686 or p0687.
- The time stamp is transferred until the control bit for falling or rising edge is set to zero in the control word. Then, the associated time stamp is set to zero.

Central measurement without handshake

When selecting the evaluation technique without handshake (p0684 = 1), the measurement for falling and rising edge is activated.

If a measurement is activated, a check is made in the DP cycle as to whether a measured value was detected:

- If the check indicates that a measured value is available, the time stamp is entered in either p0686 or p0687 and a new measurement is automatically activated.
- If the check indicates that a measured value is not available, then a time stamp of zero is entered into either p0686 or p0687.
- This means that a time stamp is only transferred once before it is overwritten with zero or a new time stamp.
- Max. edge detection cycle < 1 / T_DP

Remarks

Applications other than the application actually using the function can monitor the probe state and read the probe measured values.

Example:
EPOS axially controls "its" probe, a control can establish a connection to the probe to read its signals and the information can be integrated into the drive telegram.

Parameter p0684 (central probe evaluation technique) offers the following setting options:

- p0684 = 0: Measuring with handshake (factory setting)
- p0684 = 1: Measuring without handshake
- It cannot be guaranteed that the standard PROFIdrive connection will not fail.
- The function "without handshake" has been released for "integrated" platforms (e.g. SINAMICS integrated in SIMOTION D425).
- You must use the MIT handshake version to ensure absolute reliability when detecting the probe.

Function diagrams (see SINAMICS S110 List Manual)

- 4740 Encoder evaluation - measurement probe evaluation

Overview of important parameters (see SINAMICS S110 List Manual)

- p0680[0...5] Central measurement probe input terminal
- p0681 BI: Central measurement probe synchronization signal signal source
- p0682 CI: Central measurement probe control word signal source
- p0684 Central measurement probe evaluation response
- r0685 Central measurement probe control word display
- r0686[0...5] CO: Central measurement probe measuring time rising edge
- r0687[0...5] CO: Central measurement probe measuring time falling edge
- r0688 CO: Central measurement probe status word display

7.1.19 Pulse/direction interface

Thanks to the pulse/direction interface, SINAMICS S110 can be used for simple positioning tasks on a controller. The controller is connected to SINAMICS S110 via the encoder interface (connector X23) of the CU305. The controller uses the following methods to give setpoints to the drive via interface X23:

- Pulse/direction signals

  or

- Incremental encoder emulation via A and B track

Application 1: Position-controlled drive

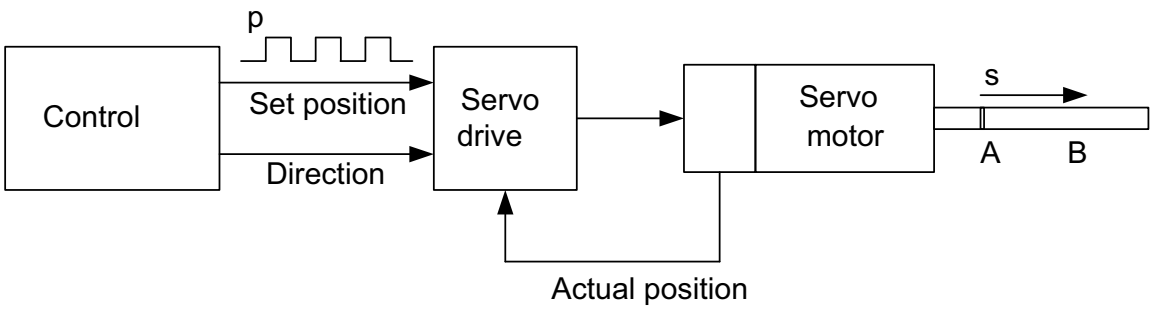

Figure 7-27 "Position-controlled drive" application

The controller specifies position setpoints via the pulse/direction interface. The position control in the drive executes all the pulses received since the enable. If the discrepancy between the setpoint and actual positions is too great, the drive generates a fault (F07452 "LR: Following error too great").

You must then acknowledge the following error and use the "position reset" signal (see "Control signals" table) to reset the setpoint/actual value. You should also use the "position reset" signal in the following cases:

- Endlessly rotating axes

  With endlessly rotating axes, briefly set and then cancel the "position reset" signal after any traversing task completed by the controller. This will ensure the maximum range (32 bits) is not exceeded.

- Absolute encoder

  With absolute encoders, you need to set the "position reset" signal at the outset in order to reset the actual value and thereby enable the axis to move.

Application 2: Speed-controlled drive

The drive is subject to speed control when operating on the controller. The clock frequency determines the speed setpoint (for details on how this is calculated, refer to the "Commissioning the pulse/direction interface" chapter).

7.1.19.1 Commissioning the pulse/direction interface

Wiring input signals

The input signals for the pulse/direction interface are wired via connector X23:

Table 7- 18 Setpoint value specification with HTL level

Pin	Signal name	Technical specifications
1 ... 6	Not relevant	–
7	M	Ground
8 ... 12	Not relevant	–
13	BP Pulse/direction interface: Direction	B track positive
14	Not relevant	–
15	AP_DAT Pulse/direction interface: Pulse	A track positive

Table 7- 19 Setpoint value specification: Encoder signal with TTL level

Pin	Signal name	Technical specifications
1 ... 6	Not relevant	–
7	M	Ground
8 ... 11	Not relevant	–
12	Setpoint value specification for encoder signal	B track negative
13		B track positive
14	Setpoint value specification for encoder signal	A track negative
15		A track positive

Wiring control signals

Control signals are created at terminals X132 and X133:

Table 7- 20 Wiring control signals

Pin	Signal name
Inputs	
X133.1 (DI 0)	Off 1
X133.2 (DI 1)	Fault acknowledgment
X133.3 (DI 3)	Position reset (only applies to position control)
X133.5	Ground
Outputs	
X132.1 (D0 8)	Ready
X132.2 (D0 9)	Fault active
X132.3 (D0 10)	Drive is stationary (only applies to position control)
X132.5	Ground

Settings in the configuration wizard

Make the settings for the pulse/direction interface via the **Process data exchange** dialog in the STARTER configuration wizard:

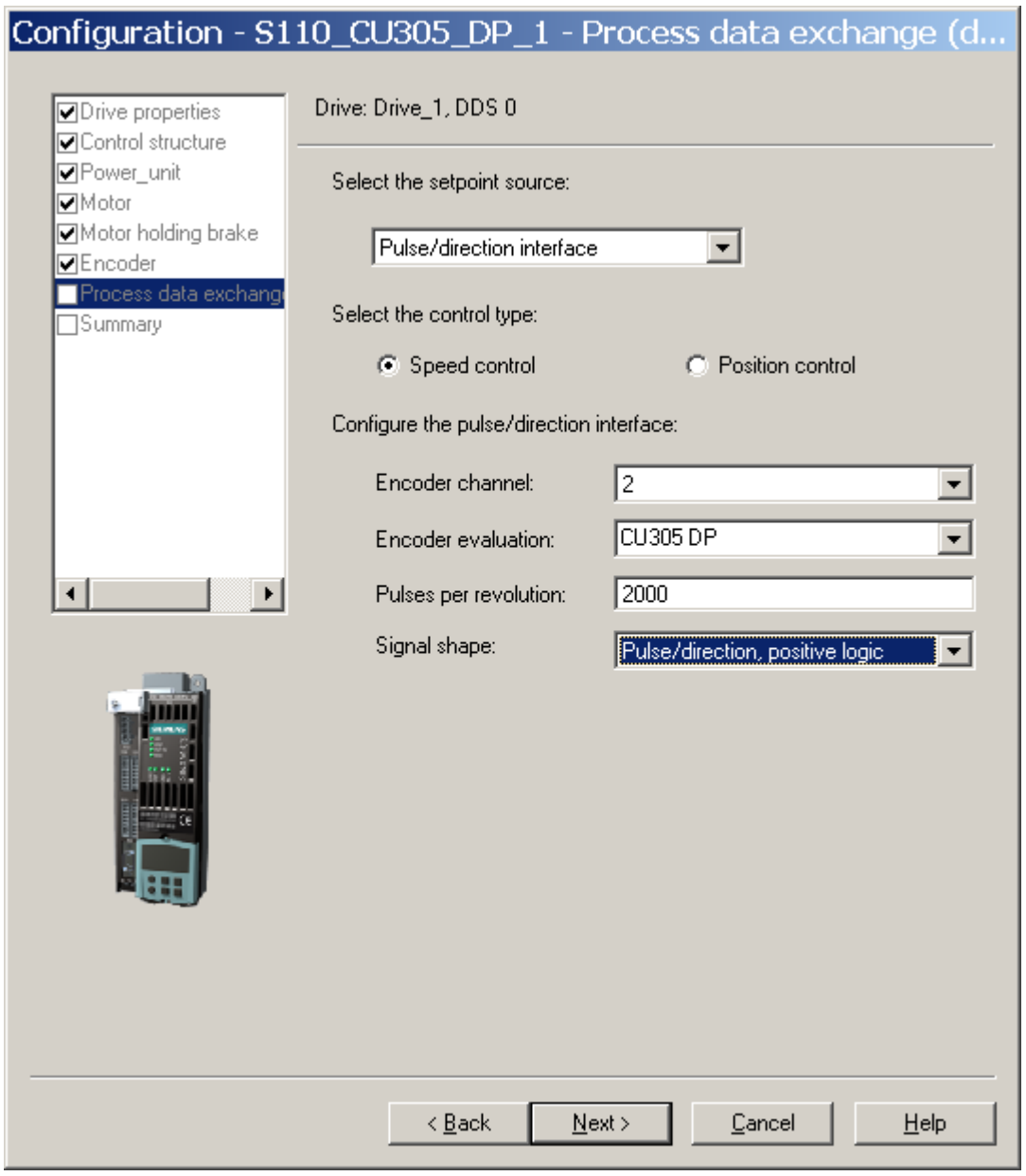

Figure 7-28 Configuring the pulse/direction interface in STARTER

Make the following settings:

- Control type: **Speed control** or **Position control**
- **Encoder channel**

  The pulse/direction interface is assigned an encoder channel. If you are using a motor encoder, it is always assigned encoder channel 1. This means you need to select encoder channel 2 for the pulse/direction interface.
- **Encoder evaluation**

  Select the integrated HTL/TTL encoder evaluation of the CU305 as the input for the pulse/direction interface.
- The **pulse number** is calculated from the maximum clock frequency of the controller and the preferred maximum motor speed. The following formula applies:

  Pulse number = (max. clock frequency · 60)/max. speed

  Example: If the controller has a maximum clock frequency of 100 kHz and the motor being used is to run at its maximum rated speed of 3000 rpm, the resulting pulse number will be 2000.
- Select one of the following two options for the **Signal shape**:

Table 7- 21 Signal shapes for the pulse/direction interface

Signal shape	p0405[E].5	Graphic
Pulse/direction positive logic	1	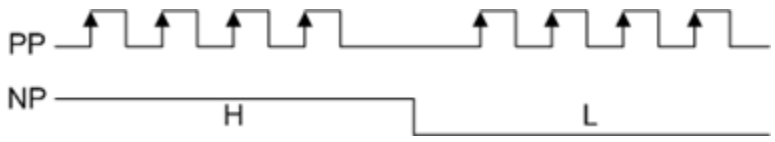
A and B track positive logic	0	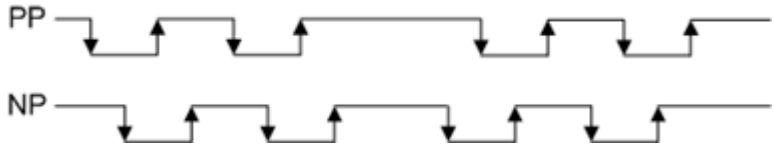

- The CU305 automatically links the control signals to the specified inputs/outputs (see the "Wiring control signals" section).

Setpoint value specification via pulse encoder emulation

- For relevant wiring information, refer to the table for "Setpoint value specification: Encoder signal with TTL level".
- As well making the settings in the commissioning wizard (see above), you also need to set the following values in the drive's expert list:
  - p0405.0 = 1 (bipolar)
  - p0405.1 = 1 (TTL)

Overview of important parameters (see SINAMICS S110 List Manual)

- p0010 Drive commissioning parameter filter
- p0141 Encoder interface (Sensor Module) component number
- p0184 Encoder interface with WSG
- p0400[0...n] Encoder type selection
- p0404[0...n] Encoder configuration active
- p0405[0...n] Rectangular signal encoder track A/B
- p0408[0...n] Rotary encoder pulse number
- r0722 CO/BO: CU digital inputs, status
- p0738 BI: CU signal source for terminal DI/DO 8
- p0739 BI: CU signal source for terminal DI/DO 9
- p2530 CI: LR position setpoint
- p2550 BI: LR enable 2

7.2 Basic functions

7.2.1 Changing over units

Description

By changing over the units, parameters and process quantities for input and output can be changed over to an appropriate system of units (US units or as per unit quantities (%)).

The following supplementary conditions apply when changing over units:

- Parameters of the rating plate of the drive converter or the motor rating plate can be changed over between SI/US units; however, a per unit representation is not possible.
- After changing over the units parameter, all parameters that are assigned to one of the units group dependent on it, are all changed over to the new system of units.
- A parameter is available to select technological units (p0595) to represent technological quantities in the technology controller.
- If the units are converted to per unit quantities and the reference quantity changed, the percentage value entered in a parameter is not changed.
  Example:
  - A fixed speed of 80% corresponds, for a reference speed of 1500 RPM, to a value of 1200 RPM.
  - If the reference speed is changed to 3000 RPM, then the value of 80% is kept and now means 2400 RPM.

Restrictions

- When a unit changeover occurs, rounding to the decimal places is carried out. This can mean that the original value might change by up to one decimal place.
- If a referenced form is selected and the reference parameters (e.g. p2000) are changed retrospectively, the referenced values of some of the control parameters are also adjusted to ensure that the control behavior is unaffected.
- If the reference variables (p2000 to p2007) are changed offline in STARTER, there is a risk that the parameter value ranges will be violated. In this case, appropriate fault messages will be displayed when the parameters are loaded to the drive units.

Groups of units

Every parameter that can be changed over is assigned to a units group, that, depending on the group, can be changed over within certain limits.

This assignment and the unit groups for each parameter are listed in the parameter list in the SINAMICS S110 List Manual.

The units groups can be individually switched via the following parameters: p0100, p0505 and p0595

Function in STARTER

To call up the function for converting units in STARTER, choose Drive object → Configuration → Units. The reference parameters can be found under Drive object → Configuration → Reference parameters.

Overview of important parameters (see SINAMICS S110 List Manual)

- p0010 Commissioning parameter filter
- p0100 Motor Standard IEC/NEMA
- p0505 Selecting the system of units
- p0595 Selecting technological units
- p0596 Reference quantity, technological units
- p2000 CO: Reference frequency/speed
- p2001 CO: Reference voltage
- p2002 CO: Reference current
- p2003 CO: Reference torque
- r2004 CO: Reference power
- p2005 CO: Reference angle
- p2007 CO: Reference acceleration

7.2.2 Reference parameters/normalizations

Description

Reference values equivalent to 100% are required in order to express units in percentage terms. These reference values are entered in parameters p2000 to p2007. They are computed during the calculation via p0340 = 1 or in STARTER during drive configuration. After calculation in the drive, these parameters are automatically protected via p0573 = 1 against overwriting through a new calculation (p0340). This eliminates the need to adjust the references values in a PROFIdrive controller whenever a new calculation of the reference parameters via p0340 takes place.

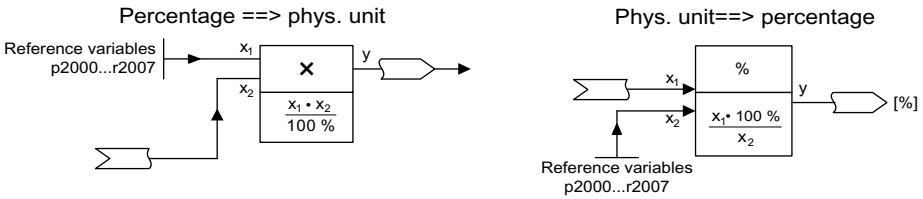

Figure 7-29 Illustration of conversion with reference values

Note

If a referenced form is selected and the reference parameters (e.g. p2000) are changed retrospectively, the referenced values of some of the control parameters are also adjusted to ensure that the control behavior is unaffected.

Using STARTER offline

Following offline drive configuration, the reference parameters are preset; they can be changed and protected under Drive → Configuration → "Disabled list" tab.

Note

If the reference values (p2000 to p2007) are changed offline in STARTER, it can lead to boundary violations of the parameter values, which cause fault messages during loading to the drive.

Normalization for servo object

Table 7- 22 Normalization for servo object

Size	Normalization parameter	Default at initial commissioning
Reference speed	100 % = p2000	Induction motor p2000 = Maximum motor speed (p0322) Synchronous motor p2000 = Rated motor speed (p0311)
Reference voltage	100 % = p2001	p2001 = 1000 V
Reference current	100 % = p2002	p2002 = Motor limit current (p0338); when p0338 = "0", 2 * rated motor current (p0305)
Reference torque	100 % = p2003	p2003 = p0338 * p0334; when "0", 2 * rated motor torque (p0333)
Reference power	100 % = r2004	r2004 = p2003 * p2000 * π / 30
Reference angle	100% = p2005	90°
Reference acceleration	100% = p2007	0.01 $1/s^2$
Reference frequency	100 % = p2000/60	-
Reference modulation depth	100 % = Maximum output voltage without overload	-
Reference flux	100 % = Rated motor flux	-
Reference temperature	100% = 100 °C	-
Reference electrical angle	100 % = 90°	-

Overview of important parameters (see SINAMICS S110 List Manual)

- p0340 Automatic calculation of motor/control parameters
- p0573 Disable automatic calculation of reference values
- p2000 Reference speed reference frequency
- p2001 Reference voltage
- p2002 Reference current
- p2003 Reference torque
- r2004 Reference power
- p2005 Reference angle
- p2007 Reference acceleration

7.2.3 Automatic restart

Description

The "automatic restart" function is used to restart the drive automatically once the power has been restored following a power failure. In this case, all of the faults present are automatically acknowledged and the drive is powered-up again. This function is not only restricted to line supply faults; it can also be used to automatically acknowledge faults and to restart the motor after any fault trips.

⚠WARNING

If p1210 is set to value > 1, the motor can start automatically once the power supply has been restored. This is especially critical if the motor comes to a standstill (zero speed) after longer power failures and it is incorrectly assumed that it has been powered down. For this reason, death, serious injury, or considerable material damage can occur if personnel enter the working area of a motor in this condition.

Automatic restart mode

Table 7- 23 Automatic restart mode

p1210	Mode	Meaning
0	Disables automatic restart	Automatic restart inactive
1	Acknowledges all faults without restarting	When p1210 = 1, faults that are present are acknowledged automatically when their cause is rectified. If further faults occur after faults have been acknowledged, then these are also again automatically acknowledged. A minimum time of p1212 + 1 s must expire between successful fault acknowledgment and a fault re-occurring if the signal ON/OFF1 (control word 1, bit 0) is at a HIGH signal level. If the ON/OFF1 signal is at a LOW signal level, the time between a successful fault acknowledgment and a new fault must be at least 1s. For p1210 = 1, fault F07320 is not generated if the acknowledge attempt failed (e.g. because the faults occurred too frequently).
4	Automatic restart after line supply failure, no additional start attempts	If p1210 = 4, an automatic restart will only be performed if fault F30003 also occurs on the Power Module or there is a HIGH signal at binector input p1208[1]. If additional faults are present, then these faults are also acknowledged and when successfully acknowledged, the starting attempt is continued. When the 24 V power supply of the CU fails, this is interrupted as a line supply failure.
6	Restart after any fault with additional start attempts	When p1210 = 6, an automatic restart is carried out after any fault or when p1208[0] = 1. If the faults occur one after the other, then the number of start attempts is defined using p1211. Monitoring over time can be set using p1213.

Starting attempts (p1211) and delay time (p1212)

p1211 is used to specify the number of starting attempts. The number is internally decremented after each successful fault acknowledgment (line supply voltage must be re-applied). Fault F07320 is signaled if the number of parameterized startup attempts is exceeded.

When p1211 = x, x + 1 starting attempts are made.

Note

A start attempt immediately starts when the fault occurs.

The faults are automatically acknowledged in intervals of half the delay time p1212.

After successful acknowledgment and voltage recovery, the system is automatically powered up again.

The starting attempt is considered to have been successfully completed once motor magnetization (induction motor) is complete (r0056.4 = 1) and one additional second has expired. The starting counter is only reset back to the initial value p1211 after this time.

If additional faults occur between successful acknowledgment and the end of the startup attempt, then the startup counter, when it is acknowledged, is also decremented.

Monitoring time line supply return (p1213)

The monitoring time starts when the faults are detected. If the automatic acknowledgments are not successful, the monitoring time runs again. If the drive has not successfully restarted once the monitoring time has expired (motor magnetization must have been completed: r0056.4 = 1), fault F07320 is output. The monitoring is deactivated with p1213 = 0.

If a fault is pending, fault F07320 will be generated on every restart attempt if the time defined in p1213 has expired. If p1210 > 1 and the time in p1213 is set lower than p1212, then fault F07320 will also be generated on every restart attempt. The monitoring time must be extended if the faults that occur cannot be immediately and successfully acknowledged (e.g. when faults are permanently present).

Commissioning

1. Activating the function
   – Automatic restart: Set mode (p1210).
2. Set starting attempts (p1211).
3. Set delay times (p1212, p1213).
4. Check function.

Overview of important parameters (see SINAMICS S110 List Manual)

- r0863 CO/BO: Drive coupling status word/control word
- p1210 Automatic restart, mode
- p1211 Automatic restart, attempts to start
- p1212 Automatic restart, delay time start attempts
- p1213 Automatic restart, waiting time increment

7.2.4 Armature short-circuit brake, DC brake

Features

- For permanent-magnet synchronous motors:
  - Controlling an external armature short-circuit configuration
- For induction motors:
  - Activation of DC brake
- Assignment as fault response

Description

Armature short-circuit braking is only supported for permanent-magnet synchronous motors. It is mainly required when braking in a hazardous situation if controlled braking using the frequency converter is no longer possible (e.g. in the event of a power failure, emergency shutdown, etc.). The motor's stator windings are short-circuited by means of a contactor circuit (possibly using external braking resistors). The resistance in the motor circuit suppresses the motor's kinetic energy.

In order for the CU305 to be able to maintain this function in the event of a power failure, an uninterruptible 24 V power supply (UPS) must be used. High-speed permanent-magnet spindle drives for machine tools are a typical application for armature short-circuit braking.

With the external armature short-circuit brake, the slow contactor response causes a response in the range of > 60 ms.

DC braking is only supported for induction motors. It can be used most effectively to bring the rotor to a safe standstill in the event of the loss of the encoder signal. In order to achieve this, a constant DC current is injected in the stator to decelerate the rotor to standstill and hold it there.

The functions can be triggered by applying a "1" signal to binector input p1230 or in response to a fault (see the description of p0491 or p2100/p2101).

External armature short-circuit braking

The external armature short-circuit is activated by setting p1231 = 1 (with contactor feedback signal) or p1231 = 2 (without contactor feedback signal). It can be triggered via an input signal p1230 (signal = 1) or a fault response. Triggering takes place once the pulses have been suppressed or the circuit breaker has been inhibited.

This function uses output terminals to control an external contactor, which can short-circuit the motor terminals via external resistors, for example. An armature short-circuit brake has the advantage of a higher braking effect than a mechanical brake at the start of braking (at a high speed). However, since the braking effect fades away as the speed drops, we recommend a combination of armature and mechanical braking.

For the function with contactor feedback signal, you will need to wire the feedback inputs of both command data sets (CDS = 2) p1235[0..1].

The external armature short-circuit is only supported for rotary-type permanent-magnet synchronous motors (p0300 = 2xx).

DC brake (induction motors)

The DC brake is activated by setting parameter p1231 = 4 (internal armature short-circuit/DC brake). It can be triggered via an input signal p1230 (signal = 1) or a fault response:

Activation of DC brake with BI p1230

If the DC brake is activated with the digital input signal, the pulses will first be inhibited for the motor demagnetization time p0347 in order to demagnetize the motor. Next, braking current p1232 is injected into the DC brake for as long as the signal = 1 at the binector input, in order to decelerate the motor or hold it at standstill.

When the DC brake is released, the drive will return to its initial operating mode (it is only at this point that the motor is remagnetized).

In this mode, parameter p1234 (speed at the start of DC braking) is ignored.

DC brake as a fault response

If the DC brake is activated as a fault response, the motor will first be decelerated in field-oriented mode along the OFF1 ramp (defined using p1082, p1121) until it reaches the speed at the start of DC braking (p1234). If the fault in response to which braking has been triggered is an encoder fault, braking will not be controlled (p1234 is ignored). Next, the pulses will be inhibited for the motor demagnetization time p0347 in order to demagnetize the motor. DC braking will then commence for the DC braking duration set in p1233. If an encoder signal is available (neither encoder fault nor encoderless operation), the DC brake will remain active for the set duration p1233 but will be deactivated at the latest when the standstill threshold p1226 is undershot.

NOTICE
In encoderless operation or with strong field weakening in particular, when the rotor is rotating, there is no guarantee of controlled operation being restored once the DC brake function has been deactivated. In such cases, the drive will shut down with a fault message with OFF2 response.

Note

- During parameterization, a check is made to determine whether the following conditions have been met (if not, fault message F7906 is generated):
  - Suitable type of motor for function
  - Function-specific: Sensible assignment of parameters p1232 ... p1237.
- The internal armature short-circuit (p1231 = 4 for synchronous motor) and internal voltage protection (p1231 = 3) functions are not supported for the SINAMICS S110 system.
- The "IASC/DC brake" fault response has the second-highest priority (second only to OFF2).

Function diagrams (see SINAMICS S110 List Manual)

- 7014 External armature short circuit (p0300 = 2xx or 4xx, synchronous motors)
- 7017 DC brake (p0300 = 1xx, induction motors)

Overview of important parameters (see SINAMICS S110 List Manual)

- p1226 Standstill detection, velocity threshold
- p1230[0...n] BI: Armature short-circuit/DC brake activation
- p1231[0...n] Armature short-circuit/DC brake configuration
- p1232[0...n] DC brake, braking current
- p1233[0...n] DC braking time
- p1234[0...n] DC brake starting speed
- p1235[0...n] BI: External armature short-circuit, contactor feedback signal
- p1236[0...n] External armature short-circuit, contactor feedback signal monitoring time
- p1237[0...n] External armature short-circuit, delay time when opening
- r1238 CO: Armature short-circuit, external state
- r1239.0..10 CO/BO: Armature short-circuit/DC brake status word

7.2.5 OFF3 torque limits

Description

If the torque limits are externally specified (e.g. tension controller), then the drive can only be stopped with a reduced torque.

In order to avoid this, there is a binector input (p1551), that for a LOW signal, activates the torque limits p1520 and p1521. This means that the drive can brake with the maximum torque by interconnecting the signal OFF 3 (r0899.5) to this binector.

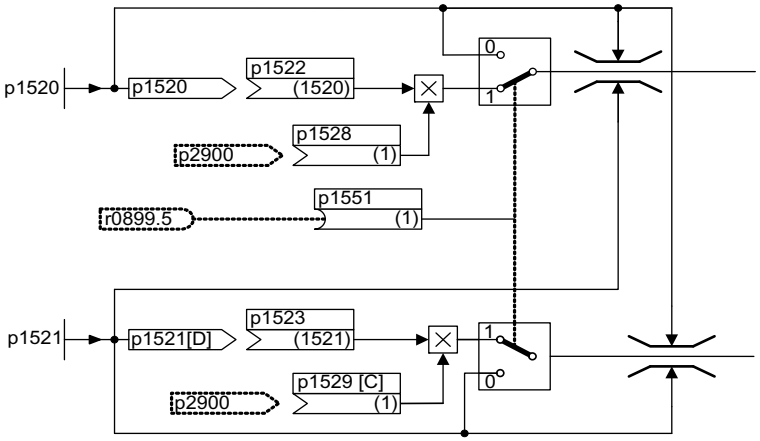

Figure 7-30 Torque limits OFF3

Function diagrams (see SINAMICS S110 List Manual)

- 5620 Motor/generator torque limits
- 5630 Upper/lower torque limit

Overview of important parameters (see SINAMICS S110 List Manual)

- p1520 Torque limit, upper/motoring
- p1521 Torque limit, lower/regenerative

7.2.6 Simple brake control

Features

- Automatic activation by means of sequence control
- Standstill (zero-speed) monitoring
- Forced brake release (p0855, p1215)
- Application of brake for a 1 signal "unconditionally close holding brake" (p0858)
- Application of brake after "Enable speed controller" signal has been canceled (p0856)

Description

The "Simple brake control" is used exclusively for the control of holding brakes. The holding brake is used to secure drives against unwanted motion when deactivated.

The control command for opening and closing the holding brake is transferred directly to the drive via by the Control Unit that logically links and monitors the signals with the system-internal processes.

The Power Module then performs the action and activates the output for the holding brake. The exact sequence control is illustrated in the SINAMICS S110 List Manual (FP 2701). The operating principle of the holding brake can be configured via parameter p1215.

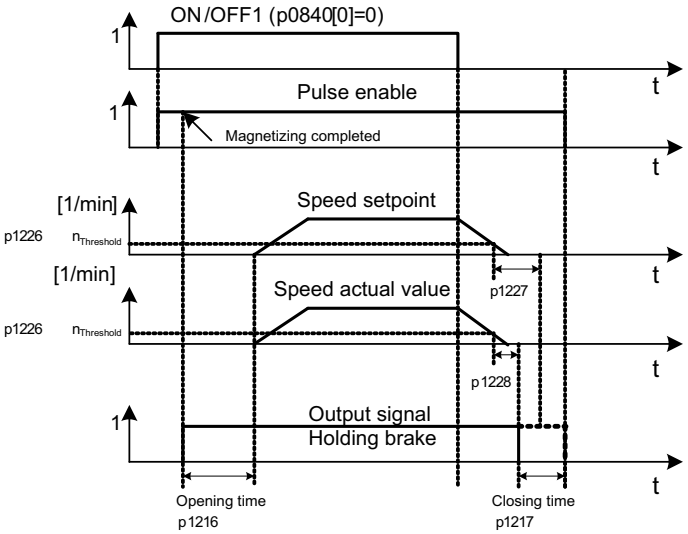

Figure 7-31 Function chart: simple brake control

The start of the closing time for the brake depends on the expiration of the shorter of the two times p1227 (Pulse suppression, delay time) and p1228 (Zero speed detection monitoring time)

⚠ WARNING

The holding brake must not be used as a service brake.

When holding brakes are used, the special technological and machine-specific conditions and standards for ensuring personnel and machine safety must be observed.

The risks involved with vertical axes, for example, must also be taken into account.

Commissioning

Simple brake control is activated automatically (p1215 = 1) when the Power Module has an internal brake control and a connected brake has been found.

If no internal brake control is available, the control can be activated using a parameter (p1215 = 3).

CAUTION

If p1215 = 0 (no brake available) is set when a brake is present, the drive runs with applied brake. This can damage the brake beyond repair.

CAUTION

Brake control monitoring may only be activated for Blocksize power units with Safe Brake Relay (p1278 = 0).

Function diagrams (see SINAMICS S110 List Manual)

- 2701 Simple brake control (r0108.14 = 0)

Overview of important parameters (see SINAMICS S110 List Manual)

- r0056.4 Magnetizing complete
- r0060 CO: Speed setpoint before the setpoint filter
- r0063 CO: Actual speed smoothed (servo)
- r0108.14 Extended brake control
- p0855[C] BI: Unconditionally release holding brake
- p0856 BI: Speed controller enabled
- p0858 BI: Unconditionally close holding brake
- r0899.12 BO: Holding brake open
- r0899.13 BO: Command, close holding brake
- p1215 Motor holding brake configuration
- p1216 Holding brake release time
- p1217 Holding brake application time
- p1226 Threshold for zero speed detection
- p1227 Zero speed detection monitoring time
- p1228 Zero speed detection, delay time
- p1278 Deactivate monitoring of brake control

7.2.7 Parking axis and parking encoder

The parking function is used in two ways:

- "Parking axis"
  - Monitoring of all encoders assigned to the "motor control" application of a drive is suppressed.
  - All encoders assigned to the "Motor control" application of a drive are prepared for the "removed" state.
- "Parking encoder"
  - Monitoring of a certain encoder is suppressed.
  - The encoder is prepared for the "removed" state.

Parking an axis

When the axis is parked, the power unit and all the encoders assigned to "motor control" are switched to inactive (r0146[n] = 0).

- Control is carried out via the control/status words of the cyclic telegram (STW2.7 and ZSW2.7) or using parameters p0897 and r0896.0.
- The drive must be brought to a standstill by the higher-level controller (disable pulses e.g. via STW1.0/OFF1).
- A measuring system that is not assigned to the "motor control" (e.g. direct measuring system) remains active (r0146[n] = 1).
- The drive object remains active.

Note

Once the "Parking axis" / "Parking encoder" status has been canceled, you may have to carry out the following actions:

If the motor encoder has been replaced: determine the commutation angle offset (p1990).

A new encoder must be referenced again (e.g. to determine the machine zero point).

Parking an encoder

When an encoder is parked, the encoder being addressed is switched to inactive (r0146 = 0).

- Control is carried out via the encoder control/status words of the cyclic telegram (Gn_STW.14 and Gn_ZSW.14).
- With a parked motor measuring system, the associated drive must be brought to a standstill by the higher-level control system (disable pulses e.g. via CTW1.0/OFF1).
- The monitoring functions for the power unit remain active (r0126 = 1).

Example: parking axis

In the following example, an axis is parked. To ensure that the axis parking is effective, the drive must be brought to a standstill (e.g. via STW1.0 (OFF1). All components assigned to the motor control (e.g. power unit and motor encoder) are shut down.

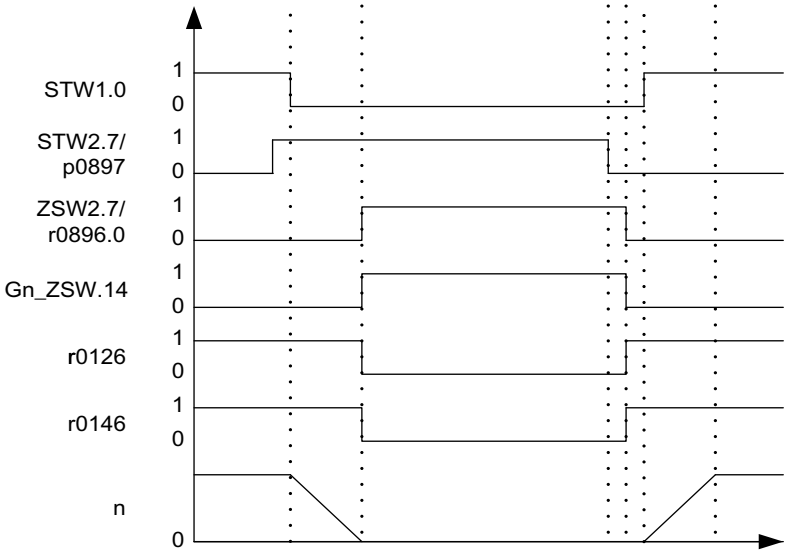

Figure 7-32 Function chart: parking axis

Example: parking encoder

In the following example, a motor encoder is parked. To activate motor encoder parking, the drive must be stopped (e.g. via STW1.0 (OFF1).

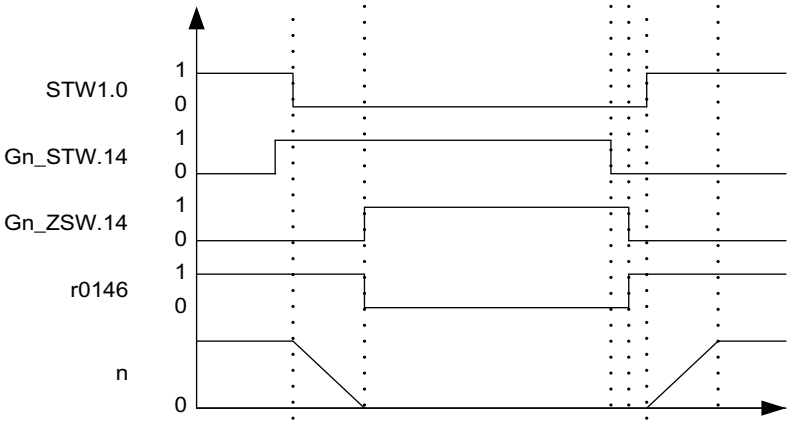

Figure 7-33 Function chart: parking encoder

Overview of important parameters (see SINAMICS S110 List Manual)

- p0145 Activate/deactivate encoder interface
- r0146 Encoder interface active/inactive
- p0895 BI: Activate/deactivate power unit component
- r0896.0 BO: Parking axis status word
- p0897 BI: Parking axis selection

7.2.8 Runtime (operating hours counter)

Total system runtime

The total system runtime is displayed in p2114 (Control Unit). Index 0 indicates the system runtime in milliseconds after reaching 86.400.000 ms (24 hours), the value is reset. Index 1 indicates the system runtime in days.

At power-off the counter value is saved.

After the drive unit is powered-up, the counter continues to run with the value that was saved the last time that the drive unit was powered-down.

Relative system runtime

The relative system runtime after the last POWER ON is displayed in p0969 (Control Unit). The value is in milliseconds and the counter overflows after 49 days.

Actual motor operating hours

The motor operating hours counter p0650 (drive) is started when the pulses are enabled. When the pulse enable is withdrawn, the counter is stopped and the value saved.

If p0651 is at 0, the counter is de-activated.

If the maintenance interval set in p0651 is reached, fault F01590 is triggered. Once the motor has been maintained, the maintenance interval must be reset.

CAUTION
If the motor data set is switched during the star/delta switchover without the motor being changed, the two values in p0650 must be added to determine the correct number of motor operating hours.

Operating hours counter for the fan

The operating hours of the fan in the power unit are displayed in p0251 (drive).

The number of hours operated can only be reset to 0 in this parameter (e.g. after a fan has been replaced). The service life of the fan is entered in p0252 (drive). Alarm A30042 is output 500 hours before this figure is reached. Monitoring is deactivated when p0252 = 0.

7.2.9 Changing the direction of rotation without changing the setpoint

Features

- Not change to the speed setpoint and actual value, the torque setpoint and actual value and the relative position change.
- Only possible when the pulses are inhibited

CAUTION
If a change of rotational direction is configured in the data set configurations (e.g. p1821[0] = 0 and p1821[1] = 1), then when the function module basic positioner or position control is activated, the absolute adjustment must be reset each time the system boots or when the rotational direction changes (p2507), as the position reference is lost when the rotational direction changes.

Note

If one of the p1959.14/15 options (positive/negative direction of rotation permitted) is selected in parameter p1959, this will affect the direction of rotation when p1821 (sense of rotation) is set as follows:
If p1821 = 0 or 1, positive direction of rotation (p1959.14 =1) means: clockwise or counter-clockwise direction respectively.
If p1821 = 1 or 0, negative direction of rotation (p1959.15 =1) means: counter-clockwise or clockwise direction respectively.

Description

The direction of rotation of the motor can be reversed using the rotational direction change via p1821 without having to change the motor rotating field by interchanging two phases at the motor and having to invert the encoder signals using p0410.

The rotational direction change via p1821 can be detected as a result of the direction of rotation of the motor. The speed setpoint and actual value, torque setpoint and actual value and also the relative position change remain unchanged.

The rotational direction change can be identified as a result of the phase voltage. Similarly, when the rotational direction changes, the absolute position reference is also lost.

Overview of important parameters (see SINAMICS S110 List Manual)

- r0069 Phase current, actual value
- p1821 Rotational direction
- p1959[0...n] Rotating measurement configuration
- p2507 LR absolute encoder adjustment status

7.3 Function modules

7.3.1 Function modules - Definition and commissioning

Description

A function module is a functional expansion of a drive project that can be activated during commissioning.

Examples of function modules:

- Technology controller
- Setpoint channel
- Extended brake control

A function module generally has separate parameters and, in some cases, separate faults and alarms too. These parameters and messages are only displayed when the function module is active. An active function module also generally requires additional processing time, which must be taken into account during configuration.

Commissioning with STARTER

In the STARTER commissioning screens, you can activate the function modules directly (e.g. technology controller) or indirectly (activating the basic positioner automatically activates position control, for example).

Commissioning via parameter (only with BOP20)

The function modules can be activated/deactivated using parameter p0108 of the Control Unit (CU). The READY LED on the main component of the drive object can be made to flash by means of parameter p0124 (CU).

Overview of important parameters (see SINAMICS S110 List Manual)

- p0108 Drive objects, function module
- p0124 Identifying the main components using LEDs

7.3.2 Technology controller

7.3.2.1 Features

Simple control functions can be implemented with the technology controller, e.g.:

- Level control
- Dancer position/tension control
- Pressure control
- Flow control
- Simple closed-loop control without higher-level controller

The technology controller features:

- Separate fixed values
- Integrated motorized potentiometer
- Technology controller with:
  - Two scalable setpoints
  - Ramp-function generator in setpoint channel
  - Filter for actual value and setpoint channel
  - Two modes for derivative component injection
  - Pre-control
  - Output ramp with limits
  - Scalable output signal

7.3.2.2 Description

Motorized potentiometer

This function is used to simulate an electromechanical potentiometer for setpoint input. Separate binector inputs for higher (p2235) and lower (p2236) are used to adjust the input setpoint: The potentiometer limits are defined within maximum (p2237) and minimum (p2238) values. The setpoint input is routed to an internal ramp-function generator, for which both a ramp-up (p2247) and a ramp-down (p2248) time, as well as an initial value (p2240) can be defined. Initial rounding can be activated to fine-tune the setpoint, whereby the acceleration of the setpoint is calculated as follows:

$a = 0.0001 \cdot MAX[p2237; |p2238|] \cdot 0.13^2$

The connector output of the motorized potentiometer (r2250) can, for example, be used as a setpoint for the technology controller. The motorized potentiometer requires the OFF1 enable for operation.

Technology controller

Two scalable setpoints (p2255/ p2256) can be specified via two connector inputs (p2253/ p2254). A ramp-function generator in the setpoint channel can be used to define a ramp by means of the ramp-up and ramp-down times (p2257/p2258). Both the setpoint and actual value channels have access to a filter element with configurable time constants (p2261 and p2265).

The proportional gain (p2280), integral time (p2285) and derivative-action time (p2274) can be set in the following technology controller. The controller itself has access to two controller type modes dependent upon p2263:

- PI controller with derivative component in actual value channel (p2263 = 0; factory setting)

  With this type of controller, changes to actual values caused by a change in the disturbance variable will generate a stronger reaction from the final controlling element (on account of the derivative component) . The effect of abrupt changes to setpoints (no ramp) on the control process is tempered by the reaction of the final controlling element (thereby reducing the load on the final controlling element). The derivative component can also be used to compensate the delay generated by the upstream smoothing of a noisy actual value signal.

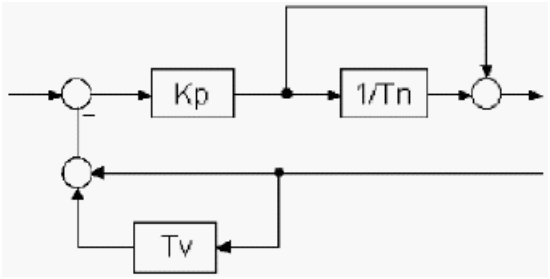

Figure 7-34 Controller structure of the PI controller with derivative component in the actual value channel

- Technology controller (p2263 = 1)

  Here, the derivative component is generated from the system deviation; as such, a setpoint change will generate an abrupt change in the final controlling element. Changes to disturbance variables are also compensated more quickly due to the action of the derivative component.

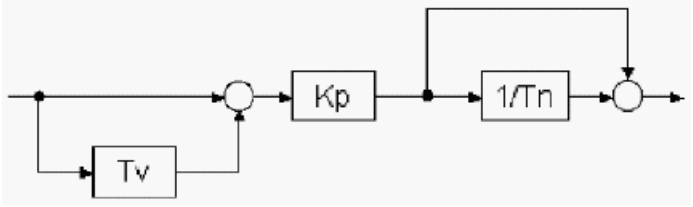

Figure 7-35 Controller structure of the PID technology controller when p2263 = 1

Please note that the controller structure of the technology controller differs from the standard technology controller structure described below, which is standard in some sources. To enable comparison, the corresponding conversions have been specified:

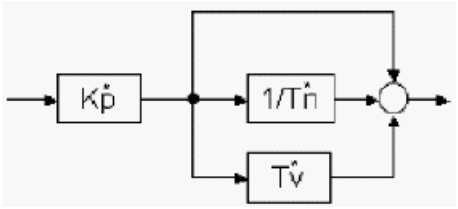

Figure 7-36 Technology controller structure with parallel components

$$\frac{U(s)}{E(s)} = K_P^* \cdot \left(1 + \frac{1}{s \cdot T_N^*} + s \cdot T_V^*\right)$$

where

$$K_P^* = K_P \cdot \left(1 + \frac{T_V}{T_N}\right) \quad T_V^* = \frac{T_V \cdot T_N}{T_V + T_N} \quad T_N^* = T_V + T_N$$

Other controller variants are also possible:

- PI controller by switching out the derivative component (rate time T_V: p2274 = 0)
- PD controller by switching out the integral component (integral time T_N: p2285 = 0)
- Proportional controller by switching-out the integral and derivative components (p2274 = 0; p2285 = 0)

Note:
In the factory setting (p2252.1 = 1), the integral component is not dependent upon the proportional gain (p2280). In this case p2285 is the integration time constant T_I. If p2252.1 = 0, p2285 will become the integral time T_N, with the result that the following applies for the integral component:

$$\frac{U_I(s)}{E(s)} = K_P \cdot \frac{1}{s \cdot T_N}$$

A further connector input (p2289) is available at the controller output for pre-control or switching in fault values. The signal is then routed via a limit (p2291/2).

The technology controller has a dedicated enable binector input (p2200). To avoid abrupt changes in the output signal, an output ram can be defined by means of a ramp-up/ramp-down time (p2293).

Note:
In the factory setting p2252.2 = 1, the output will be set to 0 as soon as the enable is lost (p2200 = 0). In order for the output signal to be fed back via the output ramp, p2252.2 = 0 must be set.

The output signal (r2294) can then be scaled via the connector input p2295 before being made available as a connector output for downstream connection.

7.3.2.3 Integration

The technology controller function is integrated in the system as follows.

Function diagrams (see SINAMICS S110 List Manual)

- 7950 Fixed values (r0108.16 = 1)
- 7954 Motorized potentiometer (r0108.16 = 1)
- 7958 Closed-loop control (r0108.16 = 1)

Overview of important parameters (see SINAMICS S110 List Manual)

Fixed setpoints

- p2201[0...n] CO: Technology controller, fixed value 1
- ...
- p2215[0...n] CO: Technology controller, fixed value 15
- p2220[0...n] BI: Technology controller fixed value selection bit 0
- p2221[0...n] BI: Technology controller fixed value selection bit 1
- p2222[0...n] BI: Technology controller fixed value selection bit 2
- p2223[0...n] BI: Technology controller fixed value selection bit 3

Motorized potentiometer

- p2230[0...n] Technology controller motorized potentiometer configuration
- p2235[0...n] BI: Technology controller motorized potentiometer, raise setpoint
- p2236[0...n] BI: Technology controller motorized potentiometer, lower setpoint
- p2237[0...n] Technology controller motorized potentiometer, maximum value
- p2238[0...n] Technology controller motorized potentiometer, minimum value
- p2240[0...n] Technology controller motorized potentiometer, start value
- r2245 CO: Technology controller motorized potentiometer, setpoint before RFG
- p2247[0...n] Technology controller motorized potentiometer, ramp-up time
- p2248[0...n] Technology controller motorized potentiometer, ramp-down time
- r2250 CO: Technology controller motorized potentiometer, setpoint after RFG

Closed-loop control

- p2200 BI: Technology controller enable
- p2253[0...n] CI: Technology controller setpoint 1
- p2254 [0...n] CI: Technology controller setpoint 2
- p2255 Technology controller setpoint 1 scaling
- p2256 Technology controller setpoint 2 scaling
- p2257 Technology controller ramp-up time
- p2258 Technology controller ramp-down time
- p2261 Technology controller setpoint filter time constant
- p2263 Technology controller type
- p2264[0...n] CI: Technology controller actual value
- p2265 Technology controller actual value filter time constant
- p2280 Technology controller proportional gain
- p2285 Technology controller integral action time
- p2289[0...n] CI: Technology controller pre-control signal
- p2295 Technology controller output scaling

7.3.2.4 Commissioning with STARTER

The "technology controller" function module can be activated via the commissioning Wizard.

You can check the actual configuration in parameter r0108.16.

Dedicated screens are available for parameterization.

7.3.3 Extended monitoring functions

7.3.3.1 Description

When the extension is activated, the monitoring functions are extended as follows:

- Speed setpoint monitoring: |n_setp| ≤ p2161
- Speed setpoint monitoring: n_set > 0
- Load monitoring

Description of load monitoring

This function monitors power transmission between the motor and the working machine. Typical applications include V-belts, flat belts, or chains that loop around the belt pulleys or cog wheels for drive and outgoing shafts and transfer the peripheral speeds and forces. Load monitoring can be used here to identify blockages in the working machine and interruptions to the power transmission.

During load monitoring, the current speed/torque curve is compared with the programmed speed/torque curve (p2182 to p2190). If the current value is outside the programmed tolerance bandwidth, a fault or alarm is triggered depending on parameter p2181. The fault or alarm message can be delayed by means of parameter p2192 to prevent false messages caused by brief transitional states.

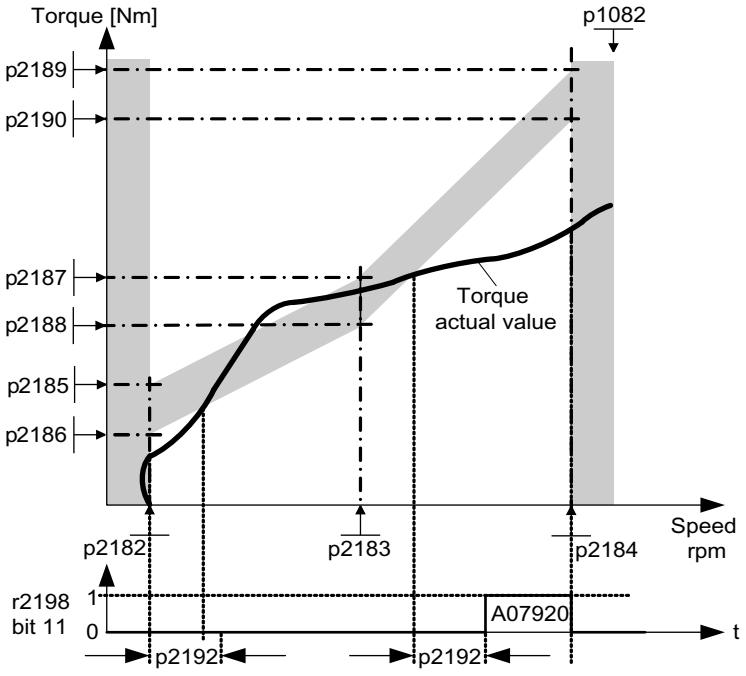

Figure 7-37 Load monitoring

Commissioning

The extended monitoring functions are activated while the commissioning wizard is running. Parameter r0108.17 indicates whether it has been activated.

Function diagrams (see SINAMICS S110 List Manual)

- 8010 Speed messages 1
- 8011 Speed messages 2
- 8013 Load monitoring

Overview of important parameters (see SINAMICS S110 List Manual)

Load monitoring

- p2181[D] Load monitoring response
- p2182[D] Load monitoring speed threshold 1
- p2183[D] Load monitoring speed threshold 2
- p2184[D] Load monitoring speed threshold 3
- p2185[D] Load torque monitoring torque threshold 1 upper
- ...
- p2190[D] Load torque monitoring torque threshold 3 lower
- p2192[D] Load monitoring delay time

Speed setpoint monitoring

- p2150[D] Hysteresis speed 3
- p2151[C] CI: Speed setpoint
- p2161[D] Speed threshold value 3
- r2198.4 BO: Status word monitoring 2, |n_setp| ≤ p2161
- r2198.5 BO: Status word monitoring 2, n_setp < 0

7.3.3.2 Commissioning

The extended monitoring functions are activated while the commissioning Wizard is running. Parameter r0108.17 indicates whether it has been activated.

7.3.4 Extended brake control

7.3.4.1 Features

The "extended brake control function" has the following features:

- Forced brake release (p0855, p1215)
- Application of brake for a 1 signal "unconditionally close holding brake" (p0858)
- Binector inputs for releasing/applying the brake (p1218, p1219)
- Connector input for threshold value for releasing/applying the brake (p1220)
- OR/AND block, each with two inputs (p1279, r1229.10, r1229.11)
- Holding and operational brakes can be activated.
- Function for monitoring brake feedback signals (r1229.4, r1229.5)
- Configurable responses (A7931, A7932)
- Application of brake after "Enable speed controller" signal has been canceled (p0856)

7.3.4.2 Integration

The "extended brake control" function module is integrated in the system as follows.

Function diagrams (see SINAMICS S110 List Manual)

- 2704 Zero speed detection (r0108.14 = 1)
- 2707 Release and apply brake (r0108.14 = 1)
- 2711 Signal outputs (r0108.14 = 1)

Overview of important parameters (see SINAMICS S110 List Manual)

- r0108.14 Extended brake control
- r0899 CO/BO: Status word sequence control

Standstill (zero-speed) monitoring

- r0060 CO: Speed setpoint before the setpoint filter
- r0063 CO: Actual speed value after actual value smoothing
- p1225 CI: Standstill detection, threshold value
- p1226 Threshold for zero speed detection
- p1227 Zero speed detection monitoring time
- p1228 Zero speed detection, delay time
- p1224[0...3] BI: Close motor holding brake at standstill
- p1276 Motor holding brake standstill detection bypass

Release and apply the brake

- p0855 BI: Unconditionally release holding brake
- p0858 BI: Unconditionally close holding brake
- p1216 Holding brake release time
- p1217 Holding brake application time
- p1218[0...1] BI: Open motor holding brake
- p1219[0...3] BI: Immediately close motor holding brake
- p1220 CI: Open motor holding brake, signal source, threshold
- p1221 Open motor holding brake threshold
- p1277 Motor holding brake delay braking threshold exceeded

Free blocks

- p1279 BI: Motor holding brake, OR/AND logic operation

Brake monitoring functions

- p1222 BI: Motor holding brake, feedback signal, brake closed
- p1223 BI: Motor holding brake, feedback signal, brake open

Configuration, control/status words

- p1215 Motor holding brake configuration
- r1229 CO/BO: Motor holding brake status word
- p1278 Motor holding brake type

Control and status messages for extended brake control

Table 7- 24 Control: Extended brake control

Signal name	Binector input	Control word sequence control / interconnection parameters
Enable speed setpoint	p1142 BI: Enable speed setpoint	STWA.6
Enable setpoint 2	p1152 BI: Setpoint 2 enable	p1152 = r0899.15
Unconditionally release holding brake	p0855 BI: Unconditionally release holding brake	STWA.7
Enable speed controller	p0856 BI: Enable speed controller	STWA.12
Unconditionally close holding brake	p0858 BI: Unconditionally close holding brake	STWA.14

Table 7- 25 Status message: Extended brake control

Signal name	Parameter	Brake status word
Command, open brake (continuous signal)	r1229.1	B_ZSW.1
Pulse enable, extended brake control	r1229.3	B_ZSW.3
Brake does not open	r1229.4	B_ZSW.4
Brake does not close	r1229.5	B_ZSW.5
Brake threshold exceeded	r1229.6	B_ZSW.6
Value below brake threshold	r1229.7	B_ZSW.7
Brake monitoring time expired	r1229.8	B_ZSW.8
Request, pulse enable missing/n_ctrl inhibited	r1229.9	B_ZSW.9
Brake OR logic operation result	r1229.10	B_ZSW.10
Brake AND logic operation result	r1229.11	B_ZSW.11

7.3.4.3 Description

The "Extended brake control" function allows complex braking control for e.g. motor holding brakes and operational brakes.

The brake is controlled as follows (the sequence reflects the priority):

- Via parameter p1215
- Via binectors p1219[0...3] and p0855
- Via zero speed detection
- Via a connector interconnection threshold value

For an AC drive with "Safe Brake Relay," the "Safe Brake Control" safety function requires that the type of the brake control be set in parameter p1278, to "Brake control with diagnostic evaluation" (p1278 = 0).

7.3.4.4 Examples

Starting against applied brake

When the device is switched on, the setpoint is enabled immediately (if other enable signals are issued), even if the brake has not yet been released (p1152 = 1). The factory setting p1152 = r0899.15 must be disconnected here. The drive first generates torque against the applied brake. The brake is not released until the motor torque or motor current (p1220) has exceeded braking threshold 1 (p1221).

This configuration is used, for example, when the drive is connected to a belt that is under tension (loop accumulator in the steel industry).

Emergency brake

If emergency braking is required, electrical and mechanical braking is to take place simultaneously. This can be achieved if OFF3 is used as a tripping signal for emergency braking:
p1219[0] = r0898.2 (OFF3 to "apply brake immediately").

The OFF3 ramp (p1135) should be set to 0 seconds so that the converter does not work against the brakes. Regenerative energy may accumulate, and this must be either fed back into the supply system or converted into heat using a braking resistor.

This is often used, for example, in calendar stacks, cutting tools, running gears, and presses.

Operating brake for crane drives

For cranes with a manual control, it is important that the drive immediately response when the control lever is moved (master switch). The drive is powered-up using the on command (p0840) (the pulses are enabled). Speed setpoint (p1142) and speed controller (p0856) are inhibited. The motor is magnetized. The magnetization time generally applicable for three-phase motors (1-2 seconds) is therefore eliminated.

Now, there is only the brake opening time that is applicable as delay between moving the master switch and the motor rotating. If the master switch is moved (deflected), then there is a "setpoint enable from the control" (bit interconnected with p1142, r1229.3, p1224.0). The speed controller is immediately enabled - the speed setpoint is enabled after the brake opening time (p1216). When the master switch is in the zero position, the speed setpoint is inhibited - the drive is ramp-down using the ramp function generator. The brake closes once the standstill limit (p1226) has been fallen below. After the brake closing time (p1217), the speed controller is inhibited (the motor is no longer generating any force). The extended brake control is used with the modifications described below.

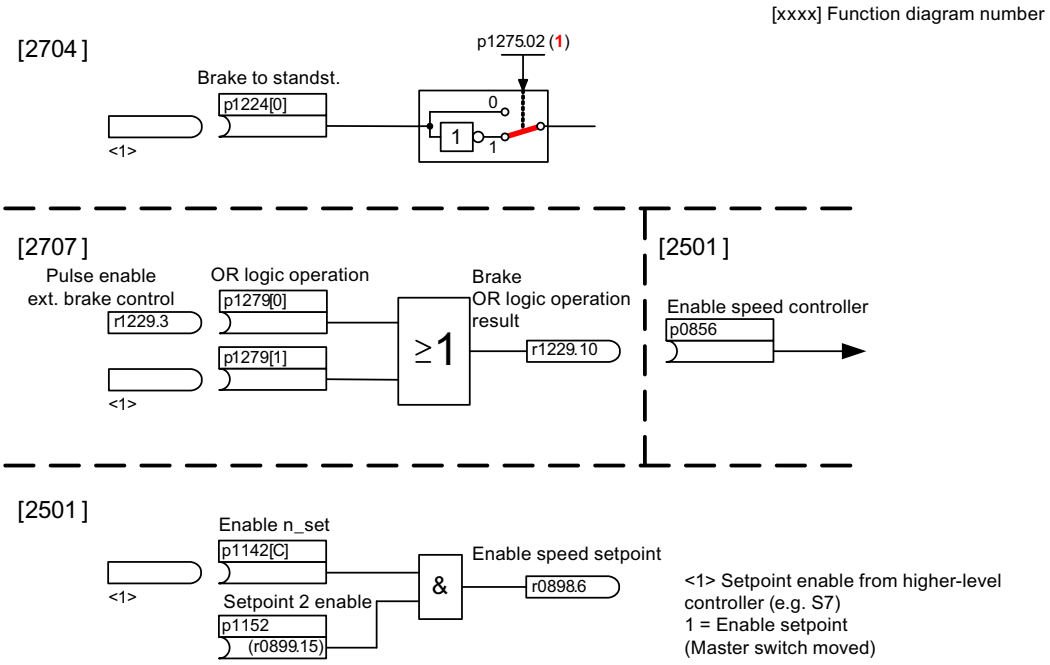

Figure 7-38 Example, operating brake for a crane drive

7.3.4.5 Commissioning

The extended brake control function can be activated while the commissioning Wizard is running. Parameter r0108.14 indicates whether the function module has been activated.

Unless you change the default settings, the extended brake control function behaves in exactly the same way as the simple brake control function.

Brake control can be activated via a parameter (p1215 = 3).

When braking with a feedback signal (p1222), the inverted signal must be connected to the BICO input for the second (p1223) feedback signal. The response times of the brakes can be set in p1216 and p1217.

Note

If p1215 = 0 (no brake available) is set when a brake is present, the drive runs with applied brake. This can damage the brake beyond repair.

CAUTION
Brake control monitoring may only be activated for Blocksize power units with Safe Brake Relay (p1278 = 0).

7.3.5 Closed-loop position control

7.3.5.1 General features

The position controller essentially comprises the following parts:

- Position actual value conditioning (including the lower-level measuring probe evaluation and reference mark search)

  There is still no position actual value conditioning for distance-coded measuring systems.
- Position controller (including limits, adaptation and the pre-control calculation)
- Monitoring functions (including standstill, positioning, dynamic following error monitoring and cam signals)
- Position tracking of the load gear (motor encoder), using absolute encoders for rotary axes (modulo) as for linear axes.

7.3.5.2 Position actual value conditioning

Features

- Correction value (p2512, p2513)
- Setting value (p2514, p2515)
- Position offset (p2516)
- Position actual value (r2521)
- Velocity actual value (r2522)
- Motor revolutions (p2504)
- Load revolutions (p2505)
- Spindle pitch (p2506)
- Position tracking (p2720ff)

Description

The position actual value conditioning implements the conditioning of the position actual value in a neutral position unit LU (LENGTH UNIT). To do this, the function block uses the encoder evaluation/motor control with the available encoder interfaces Gn_XIST1, Gn_XIST2, Gn_STW and Gn_ZSW. These just provide position information in encoder pulses and fine resolution (increments).

The position actual value is conditioned immediately after the system has booted, regardless of whether the position controller is enabled, as soon as valid values are received via the encoder interface.

Parameter p2502 (encoder assignment) is used to define from which encoder (1 or 2), the position actual value is sensed.

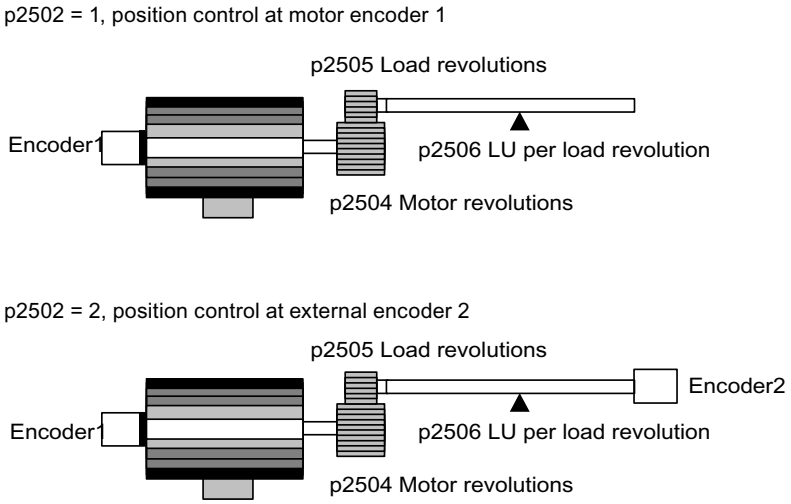

Figure 7-39 Position actual value sensing with rotary encoders

The link between the physical variables and the neutral length unit LU is established via parameter p2506 (LU per load revolution) for rotary encoders. Parameter p2506 mirrors, together with p2504, p2505, the interrelationship between encoder increments and the neutral position unit LU.

Example:

Rotary encoder, ball screw with a pitch of 10 mm/revolution. 10 mm should have a resolution of 1 µm (i.e. 1 LU = 1 µm).

→ One load revolution corresponds to 10000 LU

→ p2506 = 10000

Note

The effective actual value resolution is obtained from the product of the encoder pulses (p0408) and the fine resolution (p0418).

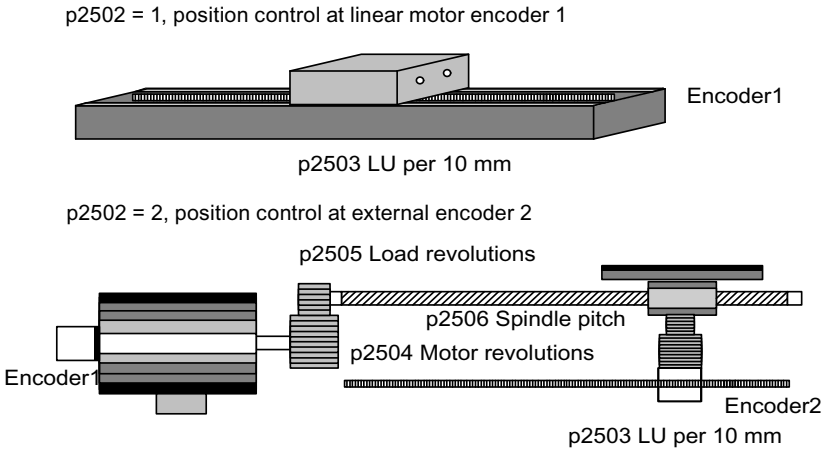

Figure 7-40 Position actual value sensing with linear encoders

For linear encoders, the interrelationship between the physical quantity and the neutral length unit LU is configured using parameter p2503 (LU/10 mm).

Example:

Linear encoder, 10 mm should have a resolution of 1 µm (i.e. 1 LU = 1 µm).

→ p2503 = 10000

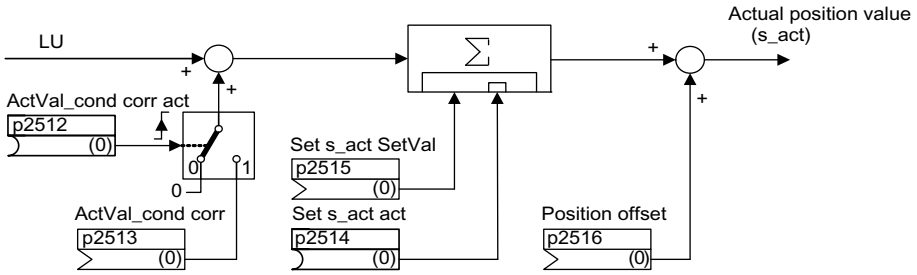

Figure 7-41 Position actual value conditioning

A correction can be made using connector input p2513 (correction value, position actual value conditioning) and a positive edge at binector input p2512 (activates the correction value). When the "basic positioning" function module is activated, p2513 is automatically interconnected with r2685 (EPOS correction value) and p2512 with r2684.7 (activate correction). This interconnection enables modulo offset by EPOS, for example.

p2516 can be used to switch in position offset. Using EPOS, p2516 is automatically interconnected to r2667. Backlash compensation is implemented using this interconnection.

Using the connector input p2515 (position setting value) and a "1" signal at binector input p2514 (set position actual value), a position setting value can be entered.

⚠ WARNING

When the actual position value is set (p2514 = "1" signal), the actual position value of the position controller is kept at the value of connector p2515 as standard.

Incoming encoder increments are not evaluated. A difference in position cannot be compensated for in this situation.

An inversion of the actual position value resulting from the encoder is undertaken using parameter p0410. An inversion of the axis motion can be entered using a negative value in p2505.

Load gear position tracking

Terminology

- Encoder range

  The encoder range is the position area that can itself represent the absolute encoder.

- Singleturn encoder

  A singleturn encoder is a rotating absolute encoder, which provides an absolute image of the position inside an encoder rotation.

- Multiturn encoder

  A multiturn encoder is an absolute encoder that provides an absolute image of several encoder revolutions (e.g. 4096 revolutions).

Description

Position tracking enables reproduction of the position of the load when gears are used. It can also be used to extend the position area.

With position tracking, a load gear can also be monitored if the "position control" function module is active (p0108.3 = 1).

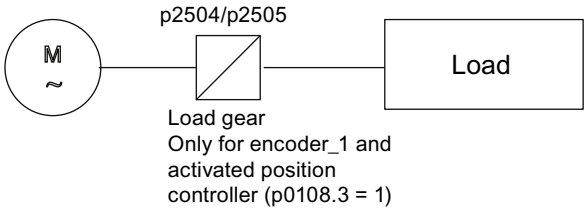

Figure 7-42 Overview of gears and encoders

The encoder position actual value in r0483 (must be requested via GnSTW.13) is limited to 2^{32} places. When position tracking is switched off (p2720.0 = 0), the encoder position actual value r0483 comprises the following position information:

- Encoder pulses per revolution (p0408)
- Fine resolution per revolution (p0419)
- Number of resolvable revolutions of the rotary absolute encoder (p0421), this value is fixed at "1" for singleturn encoders.

When position tracking is activated (p2720.0 = 1), the encoder position actual value r0483 comprises the following:

- Encoder pulses per revolution (p0408)
- Fine resolution per revolution (p0419)
- The gear ratio (p0433/p0432)

Features

- Configuration via p2720
- Virtual multiturn via p2721
- Tolerance window for monitoring the position at switching on p2722
- Input of the load gear via p2504 and p2505
- Display via r2723

Prerequisite

- Absolute encoder

Description

Position tracking enables reproduction of the position of the load when gears are used. It can also be used to extend the position area.

Position tracking is activated via parameter p2720.0 = 1. The position tracking of the load gear, however, is only relevant for the motor encoder (encoder 1). The load gear ratio is entered via parameters p2504 and p2505. Position tracking can be activated with rotary axes (modulo).

Position tracking for the load gear can only be activated once for each motor data set MDS.

The load position actual value in r2723 (must be requested via GnSTW.13, see section "Control and status words for encoders") comprises the following information:

- Encoder pulses per revolution (p0408)
- Fine resolution per revolution (p0419)
- Virtual number of stored revolutions of a rotary absolute encoder (p2721)
- Load gear ratio (p2504/p2505)

Note

The sum of p0408, p0419 and p2721 is limited to 32 bits.

Example of position area extension

With absolute encoders without position tracking, it must be ensured that the traversing range is 0 smaller than half the encoder range, because beyond this range, no unique reference remains after switching on and off (see description on parameter p2507). This traversing range can be extended using the virtual multiturn (p2721).

The following diagram illustrates an absolute encoder that can represent 8 encoder revolutions (p0421 = 8).

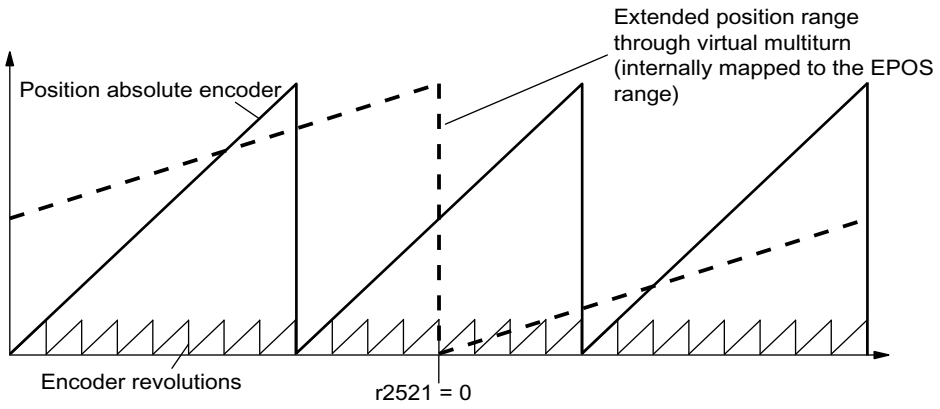

Figure 7-43 Position tracking (p2721 = 24), setting p2504 = p2505 =1 (gear factor = 1)

In this example, this means:

Without position tracking, the position for +/- 4 encoder revolutions about r2521 = 0 LU can be reproduced.

With position tracking, the position for +/- 12 encoder revolutions (+/- 12 load revolutions with load gear) can be reproduced (p2721 = 24).

Practical example:
For a linear axis, the value for p2721 is set to 262144 for an encoder with p0421 = 4096. That means, +/- 131072 encoder revolutions or load revolutions can be reproduced in this way.

For a rotary axis, a value for p2721 = p0421 is set for an encoder.

Configuration of the load gear (p2720).

The following points can be set by configuring this parameter:

- p2720.0: Activation of position tracking
- p2720.1: Setting the axis type (linear or rotary axis)

  Here, a rotary axis refers to a modulo axis (modulo offset can be activated through higher-level control or EPOS). With a linear axis, position tracking is mainly used to extend the position area (see section: Virtual multiturn encoder (p2721)).
- p2720.2: Reset position
  The position values stored in non-volatile memory are reset in response to the following events:
  - When encoder replacement is detected.
  - When the configuration of the encoder data set (EDS) is modified.
  - When the absolute encoder is adjusted again.

Note

If position tracking of the load gear is activated with parameter p2720[0]=1 (position gear load tracking) after the encoder is adjusted (p2507=3), the adjustment will be reset.

If the encoder is adjusted again when load position tracking is active, the load gear position will be reset (overflows).

The permissible position tracking range is mapped onto the reproducible encoder range of EPOS.

Virtual multiturn encoder (p2721)

The virtual multiturn resolution is used to set the number of resolvable motor rotations for a rotary absolute encoder with activated position tracking. It can be edited only for rotary axes.

With a rotary absolute encoder (p0404.1 = 1) with activated position tracking (p2720.0 = 1), p2721 can be used to enter a virtual multiturn resolution.

Note

If the gear factor is not equal to 1, then p2721 always refers to the load side. The virtual resolution, which is required for the load, is then set here.

For rotary axes, the virtual multiturn resolution (p2721) is preset to the value of the multiturn resolution of the encoder (p0421) but may be changed.

Example: Singleturn encoder

Parameter p0421 is preset to p0421 = 1. However, parameter p2721 can be altered subsequently, e.g. the user can program p2721 = 5. As a result, the encoder evaluation initiates 5 load rotations before the same absolute value is achieved again.

For linear axes, the virtual multiturn resolution (p2721) is preset to the multiturn resolution of the encoder (p0421) extended by 6 bits (max. overflows 32 positive/negative)

The value for p2721 cannot be edited again afterwards.

Example: Multiturn encoder

For a linear axis, the value for p2721 is set to 262144 for an encoder with p0421 = 4096. That means, +/- 131072 encoder revolutions or load revolutions can be reproduced in this way.

If, as a result of extension of the multiturn information, the displayable area of r2723 (32 bits) is exceeded, the fine resolution (p0419) must be reduced accordingly.

Tolerance window (p2722)

After switching on, the difference between the stored position and the actual position is ascertained and, depending on the result, the following is triggered:

Difference within the tolerance window → the position is reproduced based on the current actual encoder value.

Difference outside the tolerance window → an appropriate message (F07449) is output.

The tolerance window is preset to quarter of the encoder range and can be changed.

⚠ CAUTION

The position can only be reproduced if, in the powered-down state, the encoder was moved through less than half of the range that it can represent. For the standard EQN1325 encoder, this is 2048 revolutions or half a revolution for singleturn encoders.

Note

The ratio stamped on the gear rating plate is often just a rounded-off value (e.g.1:7.34). If, for a rotary axis, it is not permissible to have any long-term drift, then the actual ratio of the gearbox teeth must be requested from the gearbox manufacturer.

Multiple drive data sets

Position tracking of the load gear can be activated in multiple drive data sets.

- The load gear is DDS-dependent.
- Load gear position tracking is computed only for the active drive data set and is EDS-dependent.
- The position tracking memory is only available once for each EDS.
- For position tracking to be continued in different drive data sets under the same mechanical conditions and with the same encoder data sets, it must be activated explicitly in all the relevant drive data sets. Possible applications of drive data set switchover with continuation of position tracking:
  - Star/delta switchover
  - Different ramp-up times / controller settings
- When the switchover between drive data sets involves a change in gear unit, the position tracking function starts from the beginning again, i.e. it behaves on switchover as if a POWER ON had occurred.
- For identical mechanical relationships and the same encoder data set, DDS changeover has no effect on the calibration status and reference point status.

Restrictions

- Position tracking cannot be activated for an encoder data set which is used in different drive data sets as encoder1 for different gears. If an attempt is still made to activate position tracking, fault "F07555 (Drive encoder: Configuration position tracking" will be displayed with fault value 03 hex.
  A check is generally performed to determine whether the load gear is the same in all DDS in which the relevant encoder data set is used.
  In this case, the settings in each of the load gear parameters p2504[D], p2505[D], p2720[D], p2721[D] and p2722[D] must be identical.
- If an encoder data set is used in one DDS as a motor encoder with position tracking and in another DDS as an external encoder, the position tracking starts from the beginning again, i.e. it behaves in the same way as it would do after a POWER ON.
- If position tracking is reset in one drive data set, it is also reset in all other drive data sets which contain the relevant encoder data set.
- An axis in an inactive drive data set may move by a maximum of half an encoder range (see p2722: tolerance window).

Commissioning position tracking load gear using STARTER

The position tracking function can be configured in the "Mechanical system" screen for "Position control" in STARTER.
The "Mechanical system" screen for "Position control" is not made accessible unless the function module "Basic positioner" is activated (r0108.4 = 1) which means that the function module "Position control" (r0108.3 = 1) is automatically activated as well.

The "Basic positioner" function module can be activated via the commissioning wizard or the drive configuration (configure DDS) (configuration "Closed-loop control structure" - checkbox "Basic positioner").

Configuring the position tracking load gear function

The "Position tracking load gear" function can be configured in the following STARTER screens:

1. In the "Mechanical system configuration" screen in the commissioning wizard.
2. In the project navigator under Drive → "Technology" → "Position control" in the "Mechanical system" screen.

Function diagrams (see SINAMICS S110 List Manual)

- 4010 Position actual value conditioning
- 4704 Position and temperature sensing, encoders 1...2
- 4710 Actual speed value and rotor pos. meas., motor enc. (encoder 1)

Overview of important parameters (see SINAMICS S110 List Manual)

- p2502[0...n] LR encoder assignment
- p2503[0...n] LR length unit LU per 10 mm
- p2504[0...n] LR motor/load motor revolutions
- p2505[0...n] LR motor/load load revolutions
- p2506[0...n] LR length unit LU per load revolution
- r2520[0...n] CO: LR position actual value conditioning encoder control word
- r2521[0...n] CO: LR actual position value
- r2522[0...n] CO: LR actual velocity value
- r2523[0...n] CO: LR measured value
- r2524[0...n] CO: LR LU/revolutions
- r2525[0...n] CO: LR encoder adjustment offset
- r2526[0...n] CO/BO: LR status word
- p2720[0...n] Load gear configuration
- p2721[0...n] Load gear absolute encoder rotary revolutions virtual
- p2722[0...n] Load gear position tracking tolerance window
- r2723[0...n] CO: Load gea absolute value
- r2724[0...n] CO: Load gear position difference

7.3.5.3 Position controller

Features

- Symmetrization (p2535, p2536)
- Limiting (p2540, p2541)
- Pre-control (p2534)
- Adaptation (p2537, p2538)

Note

We only recommend that experts use the position controller functions without using the basic positioner.

Description

The position controller is a PI controller. The P gain can be adapted using the product of connector input p2537 (position controller adaptation) and parameter p2538 (Kp).

Using connector input p2541 (limit), the speed setpoint of the position controller can be limited without pre-control. This connector input is pre-interconnected with connector output p2540.

The position controller is enabled by an AND link of the binector inputs p2549 (position controller 1 enable) and p2550 (position controller 2 enable).

The position setpoint filter (p2533 time constant position setpoint filter) is a PT1 element, the symmetrizing filter as deadtime element (p2535 symmetrizing filter speed pre-control (deadtime) and PT1 element (p2536 symmetrizing filter speed pre-control (PT1)). The speed pre-control p2534 (factor, speed pre-control) can be disabled via the value 0.

Function diagrams (see SINAMICS S110 List Manual)

- 4015 Position controller

Overview of important parameters (see SINAMICS S110 List Manual)

- p2533 LR position setpoint filter, time constant
- p2534 LR speed pre-control factor
- p2535 LR speed pre-control symmetrizing filter dead time
- p2536 LR speed pre-control symmetrizing filter PT1
- p2537 CI: LR position controller adaptation
- p2538 LR proportional gain
- p2539 LR integral action time
- p2540 CO: LR position controller output speed limit
- p2541 CI: LR position controller output speed limit signal source

7.3.5.4 Monitoring functions

Features

- Standstill monitoring (p2542, p2543)
- Positioning monitoring (p2544, p2545)
- Dynamic following error monitoring (p2546, r2563)
- Cam controllers (p2547, p2548, p2683.8, p2683.9)

Description

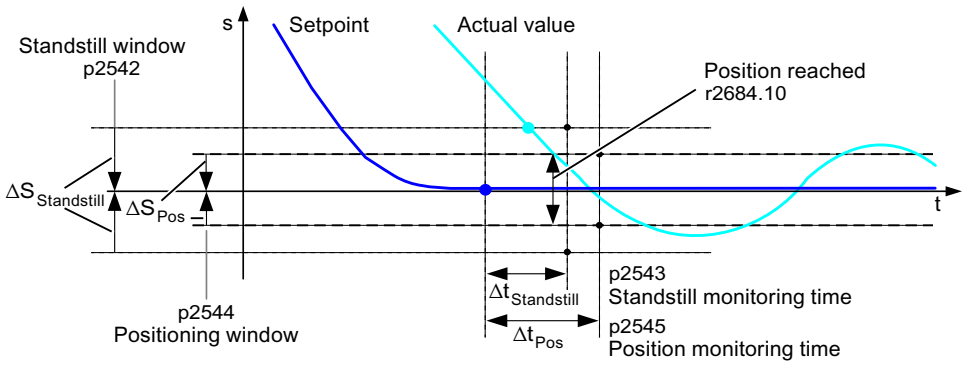

Figure 7-44 Zero-speed monitoring, positioning window

The position controller monitors the standstill, positioning and following error.

Zero-speed monitoring is activated by binector inputs p2551 (setpoint stationary) and p2542 (zero-speed window). If the zero-speed window is not reached once the monitoring time (p2543) has lapsed, fault F07450 is triggered.

Positioning monitoring is activated via binector inputs p2551 (setpoint stationary), p2554 = "0" (travel command not active) and p2544 (positioning window). Once the monitoring time (p2545) has elapsed, the positioning window is checked once. If this is not reached, fault F07451 is triggered.

The standstill monitoring and the positioning monitoring can be de-activated using the value "0" in p2542 and p2544. The standstill window should be greater than or equal to the positioning window (p2542 ≥ p2544). The standstill monitoring time should be less than or equal to the positioning monitoring time (p2543 ≤ p2545).

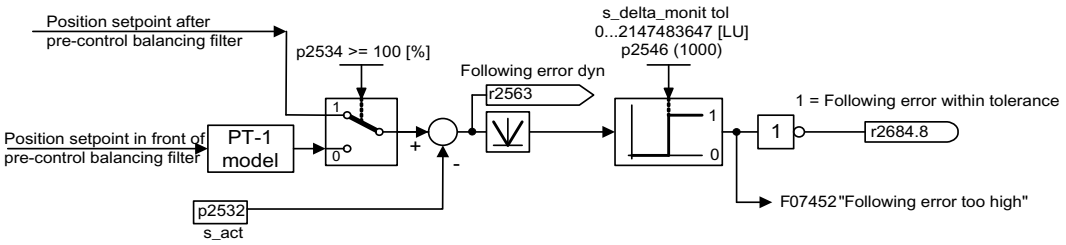

Figure 7-45 Following error monitoring

Following error monitoring is activated via p2546 (following error tolerance). If the absolute value of the dynamic following error (r2563) is greater than p2546, fault F07452 is output and bit r2648.8 is reset.

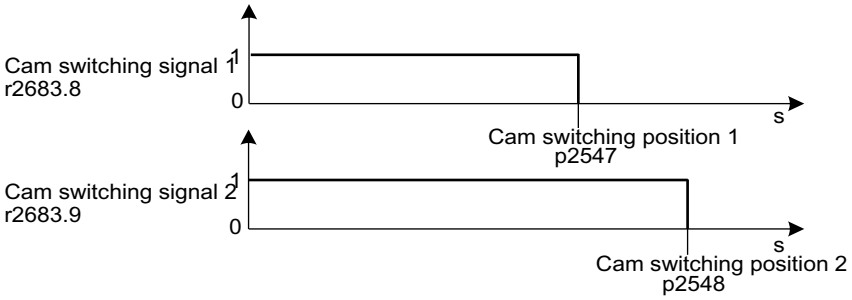

Figure 7-46 Cam controllers

The position controller has two cam controllers. If cam position p2547 or p2548 is passed in the positive direction (p2521 > p2547 or 2548), then cam signals r2683.8 and r2683.9 are reset.

Function diagrams (see SINAMICS S110 List Manual)

- 4020 Zero-speed / positioning monitoring
- 4025 Dynamic following error monitoring, cam controllers

Overview of important parameters (see SINAMICS S110 List Manual)

- p2530 CI: LR setpoint position
- p2532 CI: LR actual position value
- p2542 LR standstill window
- p2543 LR standstill monitoring time
- p2544 LR positioning window
- p2545 LR positioning monitoring time
- p2546 LR dynamic following error monitoring tolerance
- p2547 LR cam switching position 1
- p2548 LR cam switching position 2
- p2551 BI: LR setpoint message present
- p2554 BI: LR travel command message active
- r2563 CO: LR latest following error
- r2683.8 Actual position value <= cam switching position 1
- r2683.9 Actual position value <= cam switching position 2
- r2684 CO/BO: EPOS status word 2

7.3.5.5 Measuring probe evaluation and reference mark search

Description

The "Reference mark search" and "Measuring probe evaluation" functions can be initiated and carried-out via binector input p2508 (activate reference mark search) and p2509 (activate measuring probe evaluation). Binector inputs p2510 (measurement probe selection) and p2511 (measurement probe edge evaluation) define the mode for measurement probe evaluation.

The probe signals are recorded via the encoder encoder status and control word. To speed up signal processing, direct measuring probe evaluation can be activated by selecting the input terminals for probes 1/2 via p2517 and p2518. Measuring probe evaluation is carried out in the position controller cycle, whereby the set send clock cycle of the controller (r2064[1]) must be an integer multiple of the position controller cycle.

The system outputs a message if the same probe input is already being used (see also p0488, p0489 and p0580).

The appropriate function is started using a 0/1 edge at the appropriate input p2508 (activate reference mark search) or p2509 (activate measuring probe evaluation) via the encoder control word. Status bit r2526.1 (reference function) signals that the function is active (feedback from the encoder status word). Status bit r2526.2 (measurement value valid) shows the presence of the measurement required r2523 (position for reference mark or measurement probe).

Once the function is complete (position determined for reference mark or measurement probe), r2526.1 (reference function active) and r2526.2 (measurement valid) continue to remain active and the measurement is provided by r2523 (reference measurement) until the corresponding input p2508 (activate reference mark searches) or p2509 (activate measurement probe evaluation) is reset (0 signal).

If the function (reference mark search or measuring probe evaluation) has still not been completed and the corresponding input p2508 or p2509 is reset, then the function is interrupted via the encoder control word and status bit r2526.1 (reference function active) is reset via the encoder status word.

If both binector inputs p2508 and p2509 are simultaneously set, this causes the active function to be interrupted and no function is started. This is indicated using alarm A07495 "reference function interrupted" and remains until the signals at the binector inputs are reset. The alarm is also generated if, during an activated function (reference mark search or measuring probe evaluation) a fault is signaled using the encoder status word.

If the "position control" function module is selected, these parameters (p2508 to p2511) are preassigned with "0". If the "basic positioner" function module is selected, the functions "reference mark search" (for the function reference point search) and "measuring probe evaluation" (for the function flying referencing) are initiated by the function module basic positioner and the feedback signal (r2526, r2523) is fed back to this (see also: section "Control and status words for encoders").

Function diagrams (see SINAMICS S110 List Manual)

- 4010 Position actual value conditioning
- 4720 Encoder interface, receive signals, encoder 1 ... 2
- 4730 Encoder interface, send signals, encoder 1 ... 2

Overview of important parameters (see SINAMICS S110 List Manual)

- p2508 BI: LR activate reference mark search
- p2509 BI: LR activate measuring probe evaluation
- p2510 BI: LR measuring probe evaluation, selection
- p2511 BI: LR measuring probe evaluation edge
- p2517 LR direct probe 1 input terminal
- p2518 LR direct probe 2 input terminal
- r2523 CO: LR measured value
- r2526 CO/BO: LR status word

7.3.5.6 Integration

The "positon control" function module is integrated in the system as follows:

Commissioning

The configuration screen for "Position control" in STARTER is not made accessible unless the function module "Basic positioner" is activated (r0108.4 = 1) which means that the function module "Position control" (r0108.3 = 1) is automatically activated as well.

The "basic positioner" function module can be activated via the commissioning wizard, drive configuration ("configure DDS"); (configuration "Closed-loop control structure" - checkbox "basic positioner").

To ensure correct, error-free operation of the basic positioner, it is absolutely essential that the "Position control" function module is activated and the position control correctly configured.

If the "position control" function module is active, and to optimize the speed controller, a function generator signal is interconnected to the speed controller input p1160, then the position controller monitoring functions respond. To prevent this from happening, the position controller must be disabled (p2550 = 0) and switch to tracking mode (p2655 = 1, for control using PROFIdrive telegram 110 PosSTW.0 = 1). In this way, the monitoring functions are switched off and the position setpoint is tracked.

Function diagrams (see SINAMICS S110 List Manual)

- 4010 Position actual value conditioning
- 4015 Position controller
- 4020 Zero-speed / positioning monitoring
- 4025 Dynamic following error monitoring, cam controllers

7.3.6 Basic Positioner

General description

The basic positioner is used to position linear and rotary axes (modulo) in absolute/relative terms with motor encoder (indirect measuring system) or machine encoder (direct measuring system).

User-friendly configuration, commissioning, and diagnostic functions are also available in STARTER for the basic positioner functionality (graphic navigation). In STARTER, there is a control panel for the basic positioner and speed-controlled operation; using this control panel, the functionality can be started from a PC/PG to commission the system or carry out diagnostics.

When the basic positioner is activated (r0108.4 = 1), then the position control (r0108.3 = 1) should also be activated. This is realized automatically when activating the basic positioner via the STARTER commissioning wizard. Further, the necessary "internal interconnections" (BICO technology) are automatically established.

⚠ CAUTION

The basic positioner requires the position controller functions. The BICO interconnections established by the basic positioner must be changed by experienced users only.

This means that naturally the position control functions are also available (e.g. standstill monitoring, positioning monitoring, dynamic following error monitoring, cam controllers, modulo function, measuring probe evaluation). Also refer to the section "Position control".

In addition, the following functions can be carried out using the basic positioner:

- Mechanical system
  - Backlash compensation
  - Modulo offset
  - Position tracking of the load gear (motor encoder) with absolute encoders
- Limits
  - Traversing profile limits
  - Traversing range limits
  - Jerk limitation

- Referencing or adjusting
  - Set reference point (for an axis at standstill that has reached its target position)
  - Reference point approach
    (autonomous mode including reversing cam functionality, automatic direction of rotation reversal, referencing to "cams and encoder zero mark" or only "encoder zero mark" or "external equivalent zero mark (BERO)")
  - Flying referencing
    (during the "normal" traversing motion, it is possible to reference, superimposed, using the measuring probe evaluation; generally, evaluating e.g. a BERO. Higher-level (superimposed) function for the modes "jog", direct setpoint input/MDI and "traversing blocks")
  - Referencing with incremental measuring systems
  - Absolute encoder adjustment
- Traversing blocks operating mode
  - Positioning using traversing blocks that can be saved in the drive unit including block change enable conditions and specific tasks for an axis that was previously referenced
  - Traversing block editor using STARTER
  - A traversing block contains the following information:
    traversing block number
    job (e.g. positioning, wait, GOTO block step, setting of binary outputs)
    motion parameters (target position, velocity override for acceleration and deceleration)
    mode (e.g: Skip block, block change enable conditions such as "Continue_with_stop" and "Continue_flying")
    Task parameters (e.g. delay time, block step conditions)
- Direct setpoint input (MDI) mode
  - Positioning (absolute, relative) and setting-up (endless closed-loop position control) using direct setpoint inputs (e.g. via the PLC or process data)
  - It is always possible to influence the motion parameters during traversing (on-the-fly setpoint acceptance) as well as on-the-fly change between the Setup and Positioning modes.
- Jog mode
  - Closed-loop position controlled traversing of the axis with the "endless position controlled" or "jog incremental" modes that can be toggled between (traverse through a "step width")
- Standard PROFIdrive positioning telegrams are available (telegrams 7, 9, 110 and 111). When these are selected, the internal "connection" to the basic positioner is established automatically.
- Control using PROFIdrive telegrams 7 and 110.

7.3.6.1 Mechanical system

Features

- Backlash compensation (p2583)
- Modulo offset (p2577)

Description

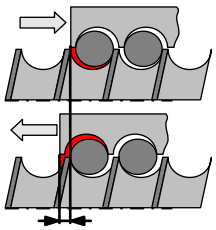

Figure 7-47 Backlash compensation

When mechanical force is transferred between a machine part and its drive, generally backlash occurs. If the mechanical system was to be adjusted/designed so that there was absolutely no play, this would result in high wear. Thus, backlash (play) can occur between the machine component and the encoder. For axes with indirect position sensing, mechanical backlash results in a falsification of the traversing distance, as, at direction reversal, the axis travels either too far or not far enough corresponding to the absolute value of the backlash.

Note

The backlash compensation is active, after

- the axis has been referenced for incremental measuring systems
- the axis has been adjusted for absolute measuring systems

In order to compensate the backlash, the determined backlash must be specified in p2583 with the correct polarity. At each direction of rotation reversal, the axis actual value is corrected dependent on the actual traversing direction and displayed in r2667. This value is taken into account in the position actual value using p2516 (position offset).

If a stationary axis is referenced by setting the reference point or an adjusted axis is powered-up with an absolute encoder, then the setting of parameter p2604 (reference point approach, starting direction) is relevant for switching-in the compensation value.

Table 7- 26 The compensation value is switched in as a function of p2604

p2604	Traversing direction	Switch in compensation value
0	positive	none
	negative	immediately
1	positive	immediately
	negative	none

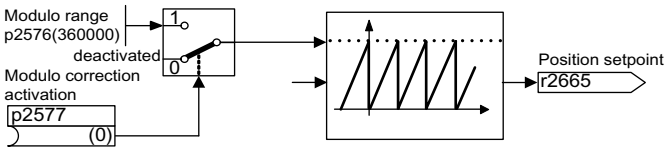

Figure 7-48 Modulo offset

A modulo axis has an unrestricted traversing range. The value range of the position repeats itself after a specific value that can be parameterized (the modulo range or axis cycle), e.g. after one revolution: 360° → 0°. The modulo range is set in parameter p2576, the offset is activated with parameter p2577. The modulo offset is undertaken at the setpoint end. This is provided with the correct sign via connector output r2685 (correction value) to appropriately correct the position actual value. EPOS initiates the activation of the correction via a rising edge of binector output r2684.7 (activate correction) (r2685 (correction value) and r2684.7 (activate correction) are already connected as standard with the corresponding binector/connector input of the position actual value conditioning). Absolute positioning details (e.g. in a traversing task) must always be within the modulo range. Modulo offset can be activated for linear and rotary length units. The traversing range cannot be limited by a software limit switch.

With active modulo offset and the application of absolute encoders, as a result of potential encoder overflows, it must be ensured that there is an integer ratio v between the multiturn resolution and the modulo range.

The ratio v can be calculated as follows:

- 1. Motor encoder without position tracking:

  v = p0421 * p2506 * p0433 * p2505 / (p0432 * p2504 * p2576)
- 2. Motor encoder with position tracking for the load gear:

  v = p2721 * p2506 * p0433 / (p0432 * p2576)
- 3. Motor encoder with position tracking for the load gear:

  v = p2721 * p2506 / p2576
- 4. Direct encoder without position tracking:

  v = p0421 * p2506 * p0433 / (p0432 * p2576)

With position tracking it is recommended to change p2721.

Function diagrams (see SINAMICS S110 List Manual)

- 3635 Interpolator
- 4010 Position actual value conditioning

Overview of important parameters (see SINAMICS S110 List Manual)

- p2576 EPOS modulo offset, modulo range
- p2577 BI: EPOS modulo offset activation
- p2583 EPOS backlash compensation
- r2684 CO/BO: EPOS status word 2
- r2685 CO: EPOS correction value

Commissioning with STARTER

In STARTER, the mechanical system screen form can be found under position control.

7.3.6.2 Limits

Description

The velocity, acceleration and deceleration can be limited and the software limit switches and STOP cams set.

Features

- Traversing profile limits
  - Maximum velocity (p2571)
  - Maximum acceleration (p2572) / maximum deceleration (p2573)
- Traversing range limits
  - Software limit switch (p2578, p2579, p2580, p2581, p2582)
  - STOP cams (p2568, p2569, p2570)
- Jerk limitation
  - Jerk limitation (p2574)
  - Activation of jerk limitation (p2575)

Maximum velocity

The maximum velocity of an axis is defined using parameter p2571. The velocity should not be set to be greater than the maximum speeds in r1084 and r1087.

The drive is limited to this velocity if a higher velocity is specified or programmed via the override (p2646) for the reference point approach or is programmed in the traversing block.

Parameter p2571 (maximum velocity) defines the maximum traversing velocity in units 1000 LU/min. If the maximum velocity is changed, then this limits the velocity of a traversing task that is presently being executed.

This limit is only effective in the positioning mode for:

- Jog mode
- Processing traversing blocks
- Direct setpoint input/MDI for positioning/setting-up
- Reference point approach

Maximum acceleration/deceleration

Parameter p2572 (maximum acceleration) and p2573 (maximum deceleration) define the maximum acceleration and the maximum deceleration. In both cases, the units are 1000 LU/s^2.

Both values are relevant for:

- Jog mode
- Processing traversing blocks
- Direct setpoint input/MDI for positioning and setting-up
- Reference point approach

The parameters do not have any effect when faults occur with the fault responses OFF1 / OFF2 / OFF3.

In the traversing blocks mode, the acceleration and deceleration can be set in multiple integer steps (1 %, 2 % ... 100 %) of the maximum acceleration and deceleration. In “direct setpoint input/MDI for positioning and setting up” operating mode, the acceleration/delay override (assignment of 4000 hex = 100%) is specified

Note

A maximum acceleration and/or delay dependent on current velocity (zigzag acceleration) is not supported.

Note

When using the PROFIdrive message frame 110, the velocity override is already connected and has to be supplied by the message frame.

Software limit switches

The connector inputs p2578 (software limit switch minus) and p2579 (software limit switch plus) limit the position setpoint if the following prerequisites are fulfilled:

- The software limit switches are activated (p2582 = "1")
- The reference point is set (r2684.11 = 1)
- The modulo correction is not active (p2577 = "0")

The connector inputs are, in the factory setting, linked to the connector output p2580 (software limit switch minus) and p2581 (software limit switch plus).

STOP cam

A traversing range can, on one hand, be limited per software using the software limit switches and on the other hand, the traversing range can be limited per hardware. In this case, the functionality of the STOP cam (hardware limit switch) is used. The function of the STOP cams is activated by the 1 signal on the binector input p2568 (activation of STOP cams).

Once enabled, the activity of binector inputs p2569 (STOP cam, minus) and p2570 (STOP cam, plus) is checked. These are low active; this means if a 0 signal is present at binector input p2569 or p2570, then these are active.

When a STOP cam (p2569 or p2570) is active, the current motion is halted with the maximum deceleration (p2573) and the appropriate status bit r2684.13 (STOP cam minus active) or r2684.14 (STOP cam plus active) is set.

When an axis has approached a STOP cam, only motion that allows the axis to move away from the cam is permitted (if both STOP cams are actuated, then no motion is possible). When the STOP cam is exited, this is identified by the 0/1 edge in the permitted traversing direction which means that the corresponding status bits (r2684.13 or r2684.14) are reset.

Jerk limitation

Acceleration and deceleration can change suddenly if jerk limiting has not been activated. The diagram below shows the traversing profile when jerk limitation has not been activated. The diagram shows that maximum acceleration (a_{max}) and deceleration (d_{max}) are effective immediately. The drive accelerates until the target speed (v_{target}) is reached and then switches to the constant velocity phase.

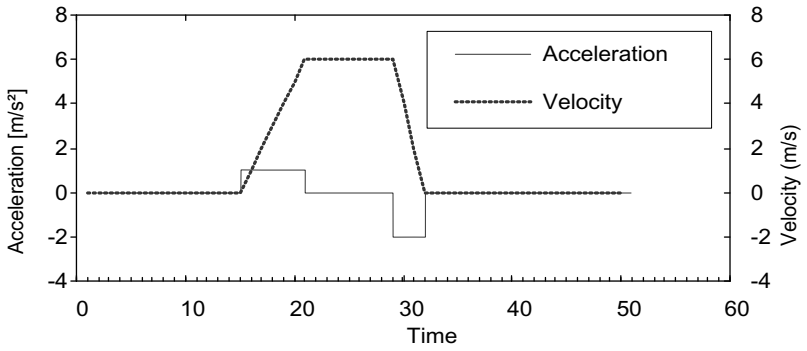

Figure 7-49 Without jerk limitation

Jerk limitation can be used to achieve a ramp-like change of both variables, which ensures "smooth" acceleration and braking as shown in the diagram below. Ideally, acceleration and deceleration should be linear.

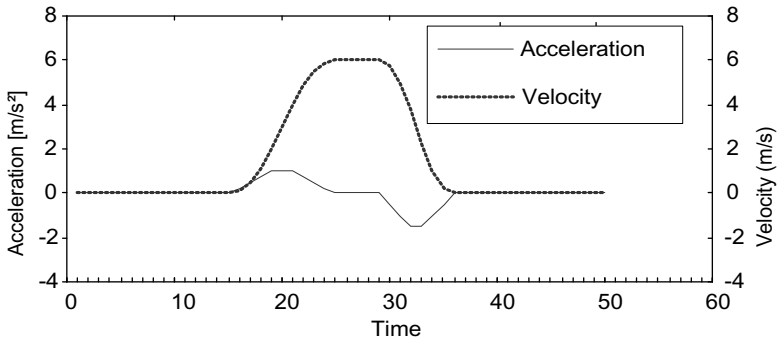

Figure 7-50 Activated jerk limitation

The maximum inclination (r_k) can be set in parameter p2574 ("Jerk limitation") in the unit LU/s³ for both acceleration and braking. The resolution is 1000 LU/s³. To activate limiting permanently, set parameter p2575 ("Active jerk limitation") to 1. In this case, limitation cannot be activated or deactivated in traversing block mode by means of the command "JERK" as this would require parameter p2575 ("Activate jerk limitation") to be set to zero. The status signal r2684.6 ("Jerk limitation active") indicates whether or not jerk limitation is active.

Limitation is effective:

- In jog mode
- When traversing blocks are processed
- When setpoints are defined directly/MDI for positioning and setup
- during referencing
- During stop responses due to alarms

Jerk limitation is not active when messages are generated with stop responses OFF1 / OFF2 / OFF3.

Function diagrams (see SINAMICS S110 List Manual)

- 3630 Traversing range limits

Overview of important parameters (see SINAMICS S110 List Manual)

- p2571 EPOS maximum velocity
- p2572 EPOS maximum acceleration
- p2573 EPOS maximum deceleration
- p2646 CI: EPOS velocity override

Software limit switches

- p2578 CI: EPOS software limit switch, minus signal source
- p2579 CI: EPOS software limit switch, plus signal source
- p2580 CO: EPOS software limit switch, minus
- p2581 CO: EPOS software limit switch, plus
- p2582 BI: EPOS software limit switch activation
- r2683 CO/BO: EPOS status word 1

STOP cam

- p2568 BI: EPOS STOP cam activation
- p2569 BI: EPOS STOP cam, minus
- p2570 BI: EPOS STOP cam, plus
- r2684 CO/BO: EPOS status word 2

7.3.6.3 Referencing

Features

- Reference point offset (p2600)
- Reversing cams (p2613, p2614)
- Reference cam (p2612)
- Binector input start (p2595)
- Binector input setting (p2596)
- Velocity override (p2646)
- Reference point coordinate (p2598, p2599)
- Selecting the referencing type (p2597)
- Absolute encoder adjustment (p2507)

NOTICE
Referencing distance-coded zero marks is not supported.

Description

After a machine has been powered-up, for positioning, the absolute dimension reference must be established to the machine zero. This operation is known as referencing.

The following referencing types are possible:

- Setting the reference point (all encoder types)
- Incremental encoder
  Active referencing (reference point approach (p2597 = 0)):
  - Reference cams and encoder zero mark (p2607 = 1)
  - Encoder zero mark (p0495 = 0 or p0494 = 0)*)
  - External zero mark (p0495 ≠ 0 or p0494 ≠ 0) *)
- Flying referencing (passive (p2597 = 1))
- Absolute encoder
  - Absolute encoder adjustment
  - Flying referencing (passive (p2597 = 1))

A connector input is provided for all referencing types to input the reference point coordinate; this allows, e.g. the change/input via the higher-level control. However, to permanently enter the reference point coordinate, an adjustable parameter for this quantity is also required. As standard, this adjustable parameter p2599 is interconnected to connector input p2598.

Set reference point

The reference point can be set using a 0/1 edge at binector input p2596 (set reference point) if no traversing commands are active and the actual position value is valid (p2658 = 1 signal).
A reference point can also be set in conjunction with an intermediate stop.

The current actual position of the drive is set here as the reference point using the coordinates specified by connector input p2598 (reference point coordinates). The setpoint (r2665) is adjusted accordingly.

This function also uses actual position value correction for the position controller (p2512 and p2513). Connector input p2598 is connected to adjustable parameter p2599 as standard. The binector input is not effective for the traversing task being presently executed.

Absolute encoder adjustment

Absolute encoders must be adjusted while commissioning. After the machine has been powered-down the position information of the encoder is kept.

When p2507 = 2 is entered, using the reference point coordinate in p2599, an offset value (p2525) is determined. This is used to calculate the position actual value (r2521). Parameter p2507 signals the adjustment with a "3" - in addition bit r2684.11 (reference point set) is set to "1".

The offset of the encoder adjustment (p2525) should be saved in a non-volatile fashion (RAM to ROM) to permanently save it.

Note

If an adjustment is lost on an already adjusted axis, the axis will remain unadjusted even when the drive unit is switched OFF/ON. The axis needs to be adjusted again in such cases.

⚠ CAUTION

During adjustment with the rotary absolute encoder, a range is aligned symmetrically around the zero point with half the encoder range within which the position is restored after switch off/on. If position tracking is deactivated (2720.0 = 0), only one encoder overflow is permitted in this range (further details are given in the chapter titled Position controller → Position actual value conditioning). Once adjustment has been carried out, the range must not be exited because a unique reference between the actual encoder value and the mechanical components cannot be established outside the range.

If the reference point p2599 is in the encoder range, the actual position value is set in line with the reference point during adjustment. Otherwise, it is set to a corrected value in the encoder range.

No overflow occurs with linear absolute encoders, which means that the position can be restored within the entire traversing range after switch on/off once adjustment has been carried out. During adjustment, the actual position value is set in line with the reference point.

Reference point approach for incremental measurement systems

When the reference point approach (in the case of an incremental measuring system), the drive is moved to its reference point. In so doing, the drive itself controls and monitors the complete referencing cycle.

Incremental measuring systems require that after the machine has been powered-up, the absolute dimension reference is established to the machine zero point. When powering-up the position actual value x_0 in the non-referenced state is set to $x_0 = 0$. Using the reference point approach, the drive can be reproducibly moved to its reference point. The geometry with a positive starting direction (p2604 = "0") is shown in the following.

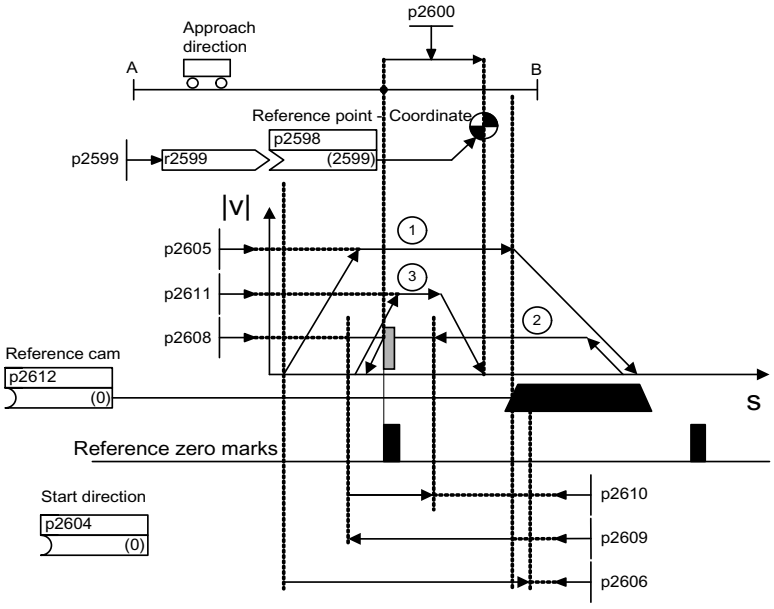

Figure 7-51 Example: reference point approach with reference cam

The signal on binector input p2595 (start referencing) is used to trigger travel to the reference cam (p2607 = 1) if search for reference is selected at the same time (0 signal at binector input p2597 (referencing type selection). The signal in binector input p2595 (start referencing) must be set during the entire referencing process otherwise the process is aborted. Once started, the status signal r2684.11 (reference point set) is reset.

The software limit switch monitoring is inactive during the complete reference point approach; only the maximum traversing range is checked. The SW limit switch monitoring is, if required, re-activated after completion.

The velocity override set is only effective during the search for the reference cam (step 1). This ensures that the "cam end" and "zero mark" positions are always overrun at the same speed. If signal propagation delays arise during switching processes, this ensures that the offset caused during establishment of position is the same in each referencing process.

Axes that only have one zero mark over their complete traversing or modulo range are designated with parameter p2607 = 0 (no reference cam present). After starting the referencing process, synchronization to the reference zero marks is started straight away (see step 2) for these axes.

Search for reference, step 1: travel to reference cam

If there is no reference cam present (p2607 = 0), go to step 2.

When the referencing process is started, the drive accelerates at maximum acceleration (p2572) to the reference cam approach velocity (p2605). The direction of the approach is determined by the signal of binector input p2604 (search for reference start direction).

When the reference cam is reached, this is communicated to the drive using the signal at binector input p2612 (reference cam); the drive then brakes down to standstill with the maximum deceleration (p2573).

If a signal at binector input p2613 (reversing cam, MINUS) or at binector input p2614 (reversing cam, PLUS) is detected during reference point approach, the search direction is reversed.

If the minus reversing cam is approached in the positive direction of travel or the plus reversing cam in the negative direction of travel, fault message F07499 "EPOS: Reversing cam approached from the wrong direction" is generated. In this case, the reversing cam connections must be checked (BI: p2613, BI: p2614) or the direction of approach to the reversing cam.

The reversing cams are low active. If both reversing cams are active (p2613 = "0" and p2614 = "0"), the drive remains stationary. As soon as the reference cam is found, then synchronization to the reference zero mark is immediately started (refer to step 2).

If the axis leaves its start position and travels the distance defined in parameter p2606 (max. distance to reference cam) heading towards the reference cam without actually reaching the reference cam, the drive remains stationary and fault F07458 (reference cam not found) is issued.

If the axis is already located at the cam, when referencing is started, then traversing to the reference cam is not executed, but synchronization to the reference zero mark is immediately started (refer to step 2).

Note

The velocity override is effective during the search for the cam. By changing the encoder data set, status signal r2684.11 (reference point set) is reset.

The cam switch must be able to delivery both a rising and a falling edge. For a reference point approach with evaluation of the encoder zero mark, for increasing position actual values the 0/1 edge is evaluated and for decreasing position actual values, the 1/0 edge. Inversion of the edge evaluation is not possible at the sensor zero mark.

If the length measuring system has several zero marks which repeat at cyclic intervals (e.g. incremental, rotary measuring system), you must ensure that the cam is adjusted so that the same zero mark is always evaluated.

The following factors may impact the behavior of the "reference cam" control signal:

- Switching accuracy and time delay of reference cam switch
- Position controller cycle of drive
- Interpolation cycle of drive
- Temperature sensitivity of machine’s mechanical system

Search for reference, step 2: Synchronizing to the reference zero mark (encoder zero mark or external zero mark)

Reference cam available (p2607 = 1):

In step 2, the drive accelerates to the velocity, specified in p2608 (zero mark approach velocity) in the direction opposite to that specified using binector input p2604 (reference point approach start direction). The zero mark is expected at distance p2609 (max. distance to zero mark). The search for the zero mark is active (status bit r2684.0 = "1" (search for reference active)) as soon as the drive leaves the cam (p2612 = "0") and is within the tolerance band for evaluation (p2609 - p2610). If the position of the zero mark is known (encoder evaluation), the actual position of the drive can be synchronized using the zero mark. The drive starts the search for reference (see step 3). The distance moved between the end of the cam and the zero mark is displayed in diagnostics parameter r2680 (difference between the cam - zero mark).

Encoder zero mark present (p0494 = 0 or p0495 = 0) *), no reference cam (p2607 = 0):

Synchronization to the reference zero mark begins as soon as the signal at binector input p2595 (start referencing) is detected. The drive accelerates to the velocity, specified in parameter p2608 (zero mark approach velocity) in the direction specified by the signal of binector input p2604 (reference point approach start direction).

The drive synchronizes to the first zero mark and then starts to travel towards the reference point (see step 3).

Note

In this case the direction of approach to the reference zero mark is the opposite to the axes with reference cams!

External zero mark present (p0494 ≠ 0 or p0495 ≠ 0) *), no reference cam (p2607 = 0):

Synchronization to an external zero mark begins as soon as the signal at binector input p2595 (start referencing) is detected. The drive accelerates to the velocity, specified in parameter p2608 (zero mark approach velocity) in the direction specified by the signal of binector input p2604 (reference point approach start direction). The drive synchronizes to the first external zero mark (p0494 or p0495) *). The drive continues to travel with the same velocity and travel is started to the reference point (refer to step 3).

Note

The velocity override is inoperative during this process.

An equivalent zero mark can be set using parameters p0494 or p0495 *) (equivalent zero mark input terminal) and the corresponding digital input selected. As standard, for increasing actual position values, the 0/1 edge is evaluated and for decreasing position actual values, the 1/0 edge. For the equivalent zero mark, this can be inverted using parameter p0490 (invert measuring probe or equivalent zero mark).

Search for reference, step 3: Travel to reference point

Travel to the reference point is started when the drive has successfully synchronized to the reference zero mark (see step 2). Once the reference zero mark has been detected, the drive accelerates on-the-fly to the reference point approach velocity set in parameter p2611. The reference point offset (p2600), the distance between the zero mark and reference point, is extended.

If the axis has reached the reference point, then the position actual value and setpoint are set to the value specified using connector input p2598 (reference point coordinate) (as standard, connector input p2598 is connected with adjustable parameter p2599). The axis is then homed and the status signal r2684.11 (reference point set) set.

Note

The velocity override is inoperative during this process.

If the braking distance is longer than the reference point offset or a direction reversal is required due to the selected reference point offset, then after detecting the reference zero mark, the drive initially brakes to standstill and then travels back.

Flying referencing

The mode "flying referencing" (also known as post-referencing, positioning monitoring), which is selected using a "1" signal at binector input p2597 (select referencing type), can be used in every mode (jog, traversing block and direct setpoint input for positioning/setting-up) and is superimposed on the currently active mode. Flying referencing can be selected both with incremental and absolute measuring systems.

When "flying referencing" during incremental positioning (relative) you can select whether the offset value is to be taken into account for the travel path or not (p2603).

The "flying referencing" is activated by a 0/1 edge at binector input p2595 (start referencing). The signal in binector input p2595 (start referencing) must be set during the entire referencing process otherwise the process is aborted.

Status bit r2684.1 (passive/flying referencing active) is linked with binector input p2509 (activate measurement probe evaluation). It activates measurement probe evaluation. Binector inputs p2510 (measurement probe selection) and p2511 (measurement probe edge evaluation) can be used to set which measurement probe (1 or 2) and which measurement edge (0/1 or 1/0) is to be used.

The measurement probe pulse is used to supply connector input p2660 (home measurement value) with the measurement via parameter r2523. The validity of the measurement is reported to binector input p2661 (measurement valid feedback) via r2526.2.

Note

The following must always apply to the "Flying referencing mode" windows:

p2602 (outer window) > p2601 (inner window).

See function diagram 3614 for more information on the "Flying referencing mode" function.

The following then happens:

- If the drive has not yet been homed, status bit r2684.11 (reference point set) is set to "1".
- If the drive has already been homed, status bit r2684.11 (reference point set) is not reset when starting flying referencing.
- If the drive has already been homed and the position difference is less than the inner window (p2601), the old actual position value is retained.
- If the drive has already been homed and the position difference is more than the outer window (p2602), warning A07489 (reference point offset outside window 2) is output and the status bit r2684.3 (pressure mark outside window 2) set. No offset to the actual position value is undertaken.
- If the drive has already been referenced and the absolute value of the position difference is greater than the inner window (p2601) and less the outer window (p2602), then the position actual value is corrected.

Note

Flying referencing is not an active operating mode. It is superimposed by an active operating mode.

In contrast to searches for reference, flying referencing can be carried out superimposed by the machine process.

As standard, for flying referencing, measuring probe evaluation is used; when enabled, the measuring probe is selected (p2510) and the edge evaluation (p2511) (in the factory setting, measuring probe 1 is always the measuring probe, flank evaluation in the factory setting is always the 0/1 edge).

Instructions for switching data sets

In the following cases, when a DDS switch takes place, the current actual position value becomes invalid (p2521 = 0) and the reference point (r2684.11 = 0) is reset.

- The EDS that is effective for the position control changes.
- The encoder assignment changes (p2502).
- The mechanical relationships change (p2503...p2506)

With absolute encoders, the status of the adjustment (p2507) is also reset, if the same absolute encoder is selected for the position control although the mechanical relationships have changed (p2503 ... p2506).

In operating mode, a fault message (F07494) is also generated.

Function diagrams (see SINAMICS S110 List Manual)

- 3612 Referencing
- 3614 Flying referencing

Overview of important parameters (see SINAMICS S110 List Manual)

- p0494[0...n] Equivalent zero mark input terminal*)
- p0495 Equivalent zero mark input terminal*)
- p2596 BI: EPOS set reference point
- p2597 BI: EPOS referencing type selection
- p2598 CI: EPOS reference point coordinate, signal source
- p2599 CO: EPOS reference point coordinate value
- p2600 EPOS reference point approach, reference point offset

*) Parameter p0494 has the same meaning as parameter p0495. In addition, parameter p0494 has an encoder data set dependency, which can, for example, be used when switching over datasets for exchangeable heads.

7.3.6.4 Referencing with more than one zero mark per revolution

The drive detects several zero marks per revolution when using reduction gears or measuring gears. In this cases, an additional BERO signal allows the correct zero mark to be selected.

Example with a reduction gear

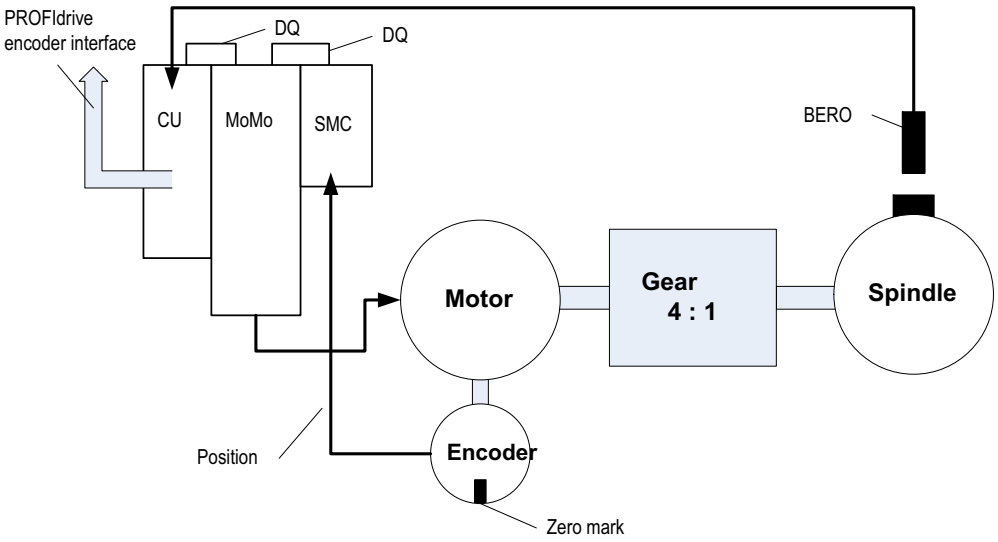

Figure 7-52 Design with a gear between the motor and spindle

The diagram shows an application example for referencing with several zero marks per revolution and selecting the correct zero mark using a BERO signal.

By using a reduction gear between the motor and the load (spindle), the drive detects several revolutions of the motor per mechanical revolution of the load - and therefore also several encoder zero marks.

The higher-level control/position control when referencing requires a unique reference between the encoder zero mark and the machine axis (load/spindle). This is the reason that the "correct" zero mark is selected using a BERO signal.

Requirements

- The position of the zero mark that has the shortest distance to the position when the BERO signal switches is to be determined.
- The appropriate mechanical preconditions must be fulfilled when mounting the BERO.
- The preferred mechanical configuration is that the BERO signal covers the zero mark as, in this case, the zero mark selection is independent of the direction of rotation.
- In order to be able to precisely determine the position of the BERO (in relation to the reference position of the encoder) even at higher speeds, this must be connected to a fast Control Unit input.

Evaluating the BERO signal

You have the option of either evaluating the positive or negative signal edge of the BERO signal:

- Positive edge (factory setting)

  For referencing with a positive evaluation of the BERO signal, the encoder interface supplies the position of the reference mark, which is directly detected after the positive edge of the BERO signal. If, mechanically, the BERO is sized in such a way that the BERO signal covers the entire width of the encoder zero mark, the required encoder zero mark will be reliably detected in both traversing directions.

- Negative edge

  For referencing with a negative edge evaluation of the BERO signal, synchronization is realized to the next reference mark after leaving the BERO signal.

Proceed as follows to parameterize referencing with several zero marks:

- Using parameter p0493, define the fast digital input to which the BERO is connected.
- Set the corresponding bit of parameter p0490 to 1: The signal inversion means that the evaluation uses the negative edge of the BERO signal.

Referencing then proceeds as follows:

- Via the PROFIdrive encoder interface, SINAMICS S receives the request for a reference mark search.
- Using the parameterization, SINAMICS S determines the zero mark depending on the BERO signal.
- SINAMICS S provides the (possibly corrected) zero mark position as reference mark via the PROFIdrive encoder interface.

Note

At high speeds or if the distance between the BERO signal and the following zero mark is too low, then it is possible that the required, next zero mark is not detected, but instead, a subsequent one due to the computation time. Due to the known zero mark distance, in this particular case, the determined position is correspondingly corrected.

When using a measuring gear, the zero mark position depends on the motor revolution. In this case, a correction is also performed and for each motor revolution a reverse calculation is made back to the position of the zero mark with the shortest distance BERO signal ↔ zero mark.

Overview of important parameters (see SINAMICS S110 List Manual)

- p0488 Measurement probe 1 input terminal
- p0489 Measurement probe 2 input terminal
- p0493 Zero mark selection input terminal
- p0495 Equivalent zero mark input terminal
- p0580 Measurement probe input terminal
- p0680 Central measurement probe input terminal
- p2517 LR direct measurement probe 1
- p2518 LR direct measurement probe 2

7.3.6.5 Traversing blocks

Description

Up to 16 different traversing blocks can be saved. The maximum number is set using parameter p2615 (maximum number of traversing tasks). All parameters which describe a traversing order are effective during a block change, i.e. if:

- The appropriate traversing block number is selected using binector inputs p2625 to p2630 (block selection, bits 0...5) and started using the signal at binector input p2531 (activate traversing task).
- A block change is made in a sequence of traversing tasks.
- An external block change p2632 "External block change" is triggered.

Traversing blocks are parameterized using parameter sets that have a fixed structure:

- Traversing block number (p2616[0...63])
  Every traversing block must be assigned a traversing block number (in STARTER "No."). The traversing blocks are executed in the sequence of the traversing block numbers. Numbers containing the value "-1" are ignored so that the space can be reserved for subsequent traversing blocks, for example.

  You can use traversing block numbers in the range from 0 ... 63, regardless of the maximum number of traversing blocks (= 16).
- Task (p2621[0...9])
  1: POSITIONING
  2: FIXED ENDSTOP
  3: ENDLESS_POS
  4: ENDLESS_NEG
  5: WAIT
  6: GOTO
  7: SET_O
  8: RESET_O
  9: JERK
- Motion parameters
  - Target position or traversing distance (p2617[0...63])
  - Velocity (p2618[0...63])
  - Acceleration override (p2619[0...63])
  - Deceleration override (p2620[0...63])

- Task mode (p2623[0...63])
  The execution of a traversing task can be influenced by parameter p2623 (task mode). This is automatically written by programming the traversing blocks in STARTER.
  Value = 0000 cccc bbbb aaaa
  - aaaa: Identifiers
    000x → Hide/show block (x = 0: show, x = 1: hide)
    A hidden block cannot be selected binary-coded via binector inputs p2625 to p2630. An alarm is output if you attempt to do so.
  - bbbb: Continuation condition
    0000, END: 0/1 edge at p2631
    0001, CONTINUE_WITH_STOP:
    The exact position parameterized in the block is approached (brake to standstill and positioning window monitoring) before block processing can continue.
    0010, CONTINUE_ON-THE-FLY:
    The system switches to the next traversing block "on the fly" when the braking point for the current block is reached (if the direction needs to be changed, this does not occur until the drive stops within the positioning window).
    0011, CONTINUE_EXTERNAL:
    Same as "CONTINUE_ON-THE-FLY", except that an instant block change can be triggered up to the braking point by a 0/1 edge. The 0/1 edge can be connected to parameter r2526.2 of the "position control" function module, via the binector input p2633 with p2632 = 1, or via the measuring input p2661 with p2632 = 0. Position detection via the measuring input can be used as an accurate starting position for relative positioning. If an external block change is not triggered, a block change is triggered at the braking point.
    0100, CONTINUE_EXTERNAL_WAIT
    Control signal "External block change" can be used to trigger a flying changeover to the next task at any time during the traveling phase. If "External block change" is not triggered, the axis remains in the parameterized target position until the signal is issued. The difference here is that with CONTINUE_EXTERNAL, a flying changeover is carried out at the braking point if "External block change" has not been triggered, while here the drive waits for the signal in the target position.
    0101, CONTINUE_EXTERNAL_ALARM
    This is the same as CONTINUE_EXTERNAL_WAIT, except that alarm A07463 "External traversing block change in traversing block x not requested" is output when "External block change" is not triggered by the time the drive comes to a standstill. The alarm can be converted to a fault with a stop response so that block processing can be aborted if the control signal is not issued.
  - cccc: positioning mode
    With the POSITION task (p2621 = 1), defines how the position specified in the traversing task is to be approached.
    0000, ABSOLUTE:
    The position specified in p2617 is approached.
    0001, RELATIVE:
    The axis is traveled along the value specified in p2617.
    0010, ABS_POS:
    For rotary axes with modulo offset only. The position specified in p2617 is approached in a positive direction.
    0011, ABS_NEG: For rotary axes with modulo offset only. The position specified in p2617 is approached in a negative direction.
- Task parameter (command-dependent significance) (p2622[0...63])

Accepting traversing blocks

You can transfer traversing blocks from one SINAMICS S110 to another. To do this, proceed as follows:

Note

It is possible to accept traversing blocks from other SINAMICS devices. SINAMICS S110, however, only imports the first 16 traversing blocks; any additional traversing blocks are declined at the time of the import and a fault message is generated.

1. Select **Project → Save and export** from the STARTER menu on the source device and define the export options.
2. If you do not want to accept certain traversing blocks, you can delete these from the **ISymbol.xml** file using a suitable editing program.
3. Select **Project → Import** from the STARTER menu on the target device and choose the XML file to be imported.

Intermediate stop and reject traversing task

The intermediate stop is activated by a 0 signal at p2640. After activation, the system brakes with the parameterized deceleration value (p2620 or p2645).

The current traversing task can be rejected by a 0 signal at p2641. After activation, the system brakes with the maximum deceleration (p2573).

The "intermediate stop" and "reject traversing task" functions are only effective in "traversing blocks" and "direct setpoint input/MDI" modes.

POSITIONING

The POSITIONING task initiates motion. The following parameters are evaluated:

- p2616[x] Block number
- p2617[x] Position
- p2618[x] Velocity
- p2619[x] Acceleration override
- p2620[x] Acceleration override
- p2623[x] Task mode

The task is executed until the target position is reached. If, when the task is activated, the drive is already located at the target position, then for the block change enable (CONTINUE_ON-THE-FLY or CONTINUE_EXTERNAL, the text task is selected in the same interpolation clock cycle. For CONTINUE_WITH_STOP, the next block is activated in the next interpolation clock cycle. CONTINUE_EXTERNAL_ALARM causes a message to be output immediately.

FIXED STOP

The FIXED STOP task triggers a traversing movement with reduced torque to fixed stop.

The following parameters are relevant:

- p2616[x] Block number
- p2617[x] Position
- p2618[x] Velocity
- p2619[x] Acceleration override
- p2620[x] Acceleration override
- p2623[x] Task mode
- p2622[x] Clamping torque [0.01 Nm] task parameter for rotary motors.

Possible continuation conditions include END, CONTINUE_WITH_STOP, CONTINUE_EXTERNAL, CONTINUE_EXTERNAL_WAIT.

ENDLESS POS, ENDLESS NEG

Using these tasks, the axis is accelerated to the specified velocity and is moved, until:

- A software limit switch is reached.
- A STOP cam signal has been issued.
- The traversing range limit is reached.
- Motion is interrupted by the control signal "no intermediate stop/intermediate stop (p2640).
- Motion is interrupted by the control signal "do not reject traversing task/reject traversing task" (p2641).
- An external block change is triggered (with the appropriate continuation condition).

The following parameters are relevant:

- p2616[x] Block number
- p2618[x] Velocity
- p2619[x] Acceleration override
- p2623[x] Task mode

All continuation conditions are possible.

JERK

Jerk limitation can be activated (command parameter = 1) or deactivated (task parameter = 0) by means of the JERK task. The signal at the binector input p2575 "Active jerk limitation" must be set to zero. The value parameterized in "jerk limit" p2574 is the jerk limit.

A precise stop is always carried out here regardless of the parameterized continuation condition of the task preceding the JERK task.

The following parameters are relevant:

- p2616[x] Block number
- p2622[x] Task parameter = 0 or 1

All continuation conditions are possible.

WAITING

The WAIT order can be used to set a waiting period, which should expire before the following order is processed.

The following parameters are relevant:

- p2616[x] Block number
- p2622[x]Task parameter = delay time in milliseconds ≥ 0 ms
- p2623[x] Task mode

The delay time is entered in milliseconds - but is rounded-off to a multiple of the interpolator clock cycle p0112[5]. The minimum delay time is one interpolation clock cycle; this means that if a delay time is parameterized which is less than an interpolation clock cycle, then the system waits for one interpolation clock cycle.

Example:

Wait time: 9 ms
Interpolation clock cycle: 4 ms
Active delay time: 12 ms

A precise stop is always carried out here before the wait time, regardless of the parameterized continuation condition of the order preceding the WAIT order. The WAIT task can be executed by an external block change.

Possible continuation conditions include END, CONTINUE_WITH_STOP, CONTINUE_EXTERNAL, CONTINUE_EXTERNAL_WAIT, and CONTINUE_EXTERNAL_ALARM. The fault message is triggered when "External block change" has still not been issued after the delay time has elapsed.

GOTO

Using the GOTO task, jumps can be executed within a sequence of traversing tasks. The block number which is to be jumped to must be specified as task parameter. A continuation condition is not permissible. If there is a block with this number, then alarm A07468 (jump destination does not exist in traversing block x) is output and the block is designated as being inconsistent.

The following parameters are relevant:

- p2616[x] Block number
- p2622[x] Task parameter = Next traversing block number

Any two of the SET_O, RESET_O and GOTO orders can be processed in an interpolation cycle and a subsequent POSITION and WAIT order can be started.

SET_O, RESET_O

Tasks SET_O and RESET_O allow up to two binary signals (output 1 or 2) to be simultaneously set or reset. The number of the output (1 or 2) is specified bit-coded in the task parameter.

The following parameters are relevant:

- p2616[x] Block number
- p2622[x] Task parameter = bit-coded output:
  0x1: Output 1
  0x2: Output 2
  0x3: Output 1 + 2

Possible continuation conditions are END, CONTINUE_ON-THE-FLY and CONTINUE_WITH_STOP, and CONTINUE_EXTERNAL_WAIT.

The binary signals (r2683.10 (output 1) (or r2683.11 (output 2)) can be assigned to digital outputs. The assignment in STARTER is made using the button "configuration digital output".

Any two of the SET_O, RESET_O and GOTO orders can be processed in an interpolation cycle and a subsequent POSITION and WAIT order can be started.

Function diagrams (see SINAMICS S110 List Manual)

- 3616 Traversing blocks operating mode

Overview of important parameters (see SINAMICS S110 List Manual)

- p2616 EPOS traversing block, block number
- p2617 EPOS traversing block, position
- p2618 EPOS traversing block, velocity
- p2619 EPOS traversing block, acceleration override
- p2620 EPOS traversing block, deceleration override
- p2621 EPOS traversing block, task
- p2622 EPOS traversing block, task parameter
- p2623 EPOS traversing block, task mode
- p2625...p2630 BI: EPOS block selection bits 0 ... 5

7.3.6.6 Travel to fixed stop

Description

The "Travel to fixed stop" function can be used, for example, to traverse sleeves to a fixed stop against the workpiece with a predefined torque. In this way, the workpiece can be securely clamped. The clamping torque can be parameterized in the traversing task (p2622). An adjustable monitoring window for travek to fixed stop prevents the drive from traveling beyond the window if the fixed stop should break away.

In positioning mode, travel to fixed stop is started when a traversing block is processed with the FIXED STOP command. In this traversing block, in addition to the specification of the dynamic parameterized position, speed, acceleration override and deceleration override, the required clamping torque can be specified as task parameter p2622. From the start position onwards, the target position is approached with the parameterized speed. The fixed stop (the workpiece) must be between the start position and the braking point of the axis; that is, the target position is placed inside the workpiece. The preset torque limit is effective from the start, i.e. travel to fixed stop also occurs with a reduced torque. The preset acceleration and deceleration overrides and the current speed override are also effective. Dynamic following error monitoring (p2546) in the position controller is not effective when traveling to the fixed stop. As long as the drive travels to the fixed stop or is in fixed stop, the "Travel to fixed stop active" status bit r2683.14 is active.

Fixed stop is reached

As soon as the axis comes into contact with the mechanical fixed stop, the closedloop control in the drive raises the torque so that the axis can move on. The torque increases up to the value specified in the task and then remains constant. Depending on the binector input p2637 (fixed stop reached), the "fixed stop reached" status bit r2683.12 is set if:

- the following error exceeds the value set in parameter p2634 (fixed stop: maximum following error) (p2637 = r2526.4)
- external status via the signal at binector input p2637 (fixed stop reached), if this p2637 ≠ r2526.4)

In travel to fixed stop, the clamping torque or clamping force in the traversing block is configured via the task parameter. This is specified in units of 0.01 Nm (rotary motor). The function module is coupled to the torque limit of the basic system via the connector output r2686[0] (torque limit upper) or r2686[1] (torque limit lower), which are connected to the connector input p1528 (torque limit upper scaling) or p1529 (torque limit lower scaling). The connector outputs r2686[0] (torque limit upper) and r2686[1] (torque limit lower) are set to 100% when fixed stop is not active. During active fixed stop, r2686[0] (torque limit upper) or r2686[1] (torque limit lower) are evaluated as a percentage of p1522/p1523 in such a way that the specified clamping torque or clamping force is limited.

When the fixed stop is acknowledged (p2637), the "Speed setpoint total" (p2562) is frozen, as long as the binector input p2553 (fixed stop reached message) is set. The speed control holds the setpoint torque due to the applied speed setpoint. The setpoint torque is output for diagnosis via the connector output r2687 (torque setpoint).

If the parameterized clamping torque is reached at the fixed stop, the status bit r2683.13 "Fixed stop clamping torque reached" is set.

Once the "Fixed stop reached" status has been detected, the traversing task "Travel to fixed stop" is ended. The program advances to the next block depending on the task parameterization. The drive remains in fixed stop until the next positioning task is processed or the system is switched to jog mode. The clamping torque is therefore also applied during subsequent waiting tasks. The continuation condition CONTINUE_EXTERNAL_WAIT can be used to specify that the drive must remain at the fixed stop until a step enabling signal is applied externally.

As long as the drive remains in fixed stop, the position setpoint is adjusted to the actual position value (position setpoint = actual position value). Fixed stop monitoring and controller enable are active.

Note

If the drive is in fixed stop, it can be referenced using the control signal "Set reference point."

If the axis leaves the position that it had at detection of the fixed stop by more than the selected monitoring window for the fixed stop p2635, then the status bit r2683.12 is reset. At the same time, the speed setpoint is set to zero, and fault F07484 "Fixed stop outside of the monitoring window" is triggered with the reaction OFF3 (quick stop). The monitoring window can be set using the parameter p2635 ("Fixed stop monitoring window"). It applies to both positive and negative traversing directions and must be selected such that it will only be triggered if the axis breaks away from the fixed stop.

Fixed stop is not reached

If the brake application point is reached without the "fixed stop reached" status being detected, then the fault F07485 "Fixed stop is not reached" is output with fault reaction OFF1, the torque limit is canceled and the drive cancels the traversing block.

Note

- The fault can be changed into an alarm (see section "Message configuration"), which means that the drive program will advance to the next specified block.
- The target point must be sufficiently far inside the workpiece.

Interruption to "Travel to fixed stop"

The "travel to fixed stop" traversing task can be interrupted and continued using the "intermediate stop" signal at the binector input p2640. The block is canceled using the binector input signal p2641 "Reject traversing task" or by removing the controller enable. In all of these cases, the drive is correspondingly braked. Measures are taken to prevent any risk of damage if the block is canceled when an axis has almost reached the fixed stop (setpoint already beyond the fixed stop, but still within the threshold for fixed stop detection). For this purpose, the position setpoint is made to follow the actual position value after standstill. As soon as the fixed stop is reached, the drive remains in fixed stop even after cancelation. It can be moved away from the fixed stop using jog or by selecting a new traversing task.

Note

The fixed stop monitoring window (p2635) is only activated when the drive is at the fixed stop and remains active until the fixed stop is exited.

Vertical axis

Note

In servo mode, a torque limit offset (p1532) can be entered for vertical axes (see also the chapter titled Servo control → Vertical axis).

With asymmetrical torque limits p1522 and p1523, the net weight is taken into account for travel to fixed stop in parameters r2686 and r2687.

If, for example, with a suspended load, p1522 is set to +1000 Nm and p1523 to -200 Nm, then a net weight of 400 Nm (p1522 - p1523) is assumed. If the clamping torque is now configured as 400 Nm, then r2686[0] is preset to 80%, r2686[1] to 0% and r2687 to 800 Nm when travel to fixed stop is activated.

Function diagrams (see SINAMICS S110 List Manual)

- 3616 Traversing blocks mode (r0108.4 = 1)
- 3617 Travel to fixed stop (r0108.4 = 1)
- 4025 Dynamic following error monitoring, cam controllers (r0108.3 = 1)

Overview of important parameters (see SINAMICS S110 List Manual)

- p1528 CI: Torque limit, upper/motoring, scaling
- p1529 CI: Torque limit, lower/regenerative scaling
- p1545 BI: Activate travel to fixed stop
- r2526 CO/BO: LR status word
- p2622 EPOS traversing block, task parameter
- p2634 EPOS Fixed stop maximum permissible following error
- p2635 EPOS Fixed stop monitoring window
- p2637 BI: EPOS Fixed stop reached
- p2638 BI: EPOS Fixed stop outside monitoring window
- r2683 CO/BO: EPOS status word 1
- r2686 CO: EPOS Torque limit effective

7.3.6.7 Direct setpoint input (MDI)

Features

- Select direct setpoint input (p2647)
- Select positioning type (p2648)
- Direction selection (p2651, p2652)
- Setting-up (p2653)
- Fixed setpoints
  - CO: Position setpoint (p2690)
  - CO: Velocity setpoint (p2691)
  - CO: Acceleration override (p2692)
  - CO: Deceleration override (p2693)
- Connector inputs
  - CI: MDI position setpoint (p2642)
  - CI: MDI velocity setpoint (p2643)
  - CI: MDI acceleration override (p2644)
  - CI: MDI deceleration override (p2645)
  - CI: Velocity override (p2646)
- Accept (p2649, p2650)

Description

The direct setpoint input function allows for positioning (absolute, relative) and setup (endless position-controlled) by means of direct setpoint input (e.g. via the PLC using process data).

During traversing, the motion parameters can also be influenced (on-the-fly setpoint acceptance) and an on-the-fly change can be undertaken between the Setup and Positioning modes. The "direct setpoint input" mode (MDI) can also be used if the axis is not referenced in the "setup" or "relative positioning" modes, which means that "flying referencing" (see the separate section), flying synchronization, and post-referencing are possible.

The direct setpoint input function is activated by p2647 = 1. A distinction is made between two modes: positioning mode (p2653 = 0) and setup mode (p2653 = 1).

In "positioning" mode, the parameters (position, velocity, acceleration and deceleration) can be used to carry out absolute (p2648 = 1) or relative (p2648 = 0) positioning with the parameter p2690 (fixed setpoint position).

In the setting-up mode, using parameters (velocity, acceleration and deceleration) "endless" closed-loop position control behavior can be carried out.

It is possible to make a flying changeover between the two modes.

If continuous acceptance (p2649 = 1) is activated, changes to the MDI parameters are accepted immediately. Otherwise the values are only accepted when there is a positive edge at binector input p2650 (setpoint acceptance edge).

Note

Continuous acceptance p2649 = 1 can only be set with free telegram configuration p0922 = 999. No relative positioning is allowed with continuous acceptance.

The direction of positioning can be specified using p2651 (positive direction specification) and p2652 (negative direction specification). If both inputs have the same status, the shortest distance is traveled during absolute positioning (p2648 = "1") of modulo axes (p2577 = "1").

To use the positioning function, the drive must be in operating mode (r0002 = 0). The following options are available for starting positioning:

- p2649 is "1" and positive edge on p2647
- p2649 is "0" and p2647 is "1"
  - positive edge on p2650 or
  - positive edge on p2649

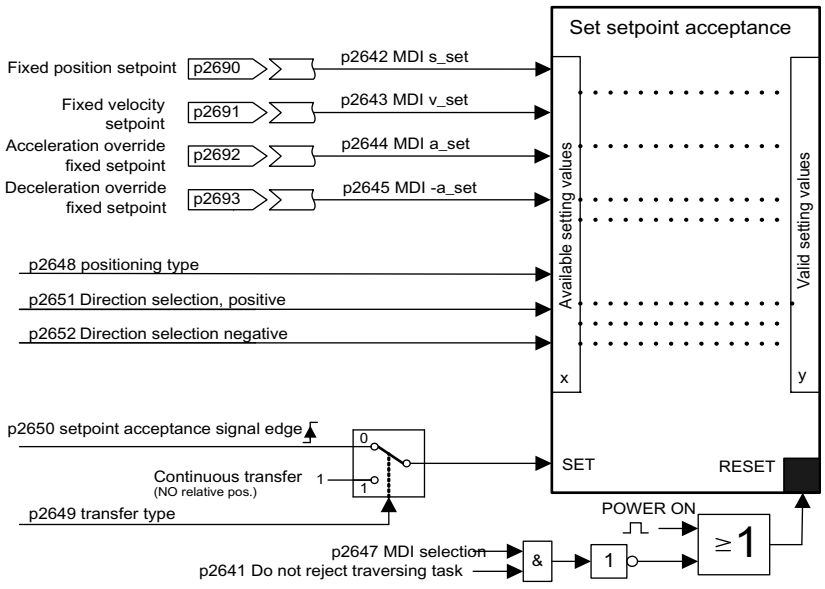

Figure 7-53 Setpoint transfer

MDI mode with the use of PROFIdrive telegram 110.

If the connector input p2654 is preset with a connector input <> 0 (e.g. with PROFIdrive telegram 110 with r2059[11]), then it will internally manage the control signals "Select positioning type", "Positive direction selection" and "Negative direction selection". The following characteristics are evaluated from the value of the connector input:

- xx0x = absolute → p2648
- xx1x = relative → p2648
- xx2x = ABS_POS → p2648, p2651
- xx3x = ABS_NEG → p2648, p2652

Intermediate stop and reject traversing task

The intermediate stop is activated by a 0 signal at p2640. After activation, the system brakes with the parameterized deceleration value (p2620 or p2645).

The current traversing task can be rejected by a 0 signal at p2641. After activation, the system brakes with the maximum deceleration (p2573).

The "intermediate stop" and "reject traversing task" functions are only effective in "traversing blocks" and "direct setpoint input/MDI" modes.

Function diagrams (see SINAMICS S110 List Manual)

- 3618 EPOS - direct setpoint input mode/MDI, dynamic values
- 3620 EPOS - direct setpoint input mode/MDI

Overview of important parameters (see SINAMICS S110 List Manual)

- p2577 BI: EPOS modulo offset activation
- p2642 CI: EPOS direct setpoint input/MDI, position setpoint
- p2643 CI: EPOS direct setpoint input/MDI, velocity setpoint
- p2644 CI: EPOS direct setpoint input/MDI, acceleration override
- p2645 CI: EPOS direct setpoint input/MDI, deceleration override
- p2648 BI: EPOS direct setpoint input/MDI, positioning type
- p2649 BI: EPOS direct setpoint input/MDI, acceptance type
- p2650 BI: EPOS direct setpoint input/MDI, setpoint acceptance edge
- p2651 BI: EPOS direct setpoint input/MDI, positive direction selection
- p2652 BI: EPOS direct setpoint input/MDI, negative direction selection
- p2653 BI: EPOS direct setpoint input/MDI, setup selection
- p2654 CI: EPOS direct setpoint input/MDI, mode adaptation
- p2690 CO: EPOS position, fixed setpoint
- p2691 CO: EPOS velocity, fixed setpoint
- p2692 CO: EPOS acceleration override, fixed setpoint
- p2693 CO: EPOS deceleration override, fixed setpoint

7.3.6.8 Jog

Features

- Jog signals (p2589, p2590)
- Velocity (p2585, p2586)
- Incremental (p2587, p2588, p2591)

Description

Using parameter p2591 it is possible to change over between jog incremental and jog velocity.

The traversing distances p2587 and p2588 and velocities p2585 and p2586 are entered using the jog signals p2589 and p2590. The traversing distances are only effective for a "1" signal at p2591 (jog, incremental). For p2591 = "0" then the axis moves to the start of the traversing range or the end of the traversing range with the specified velocity.

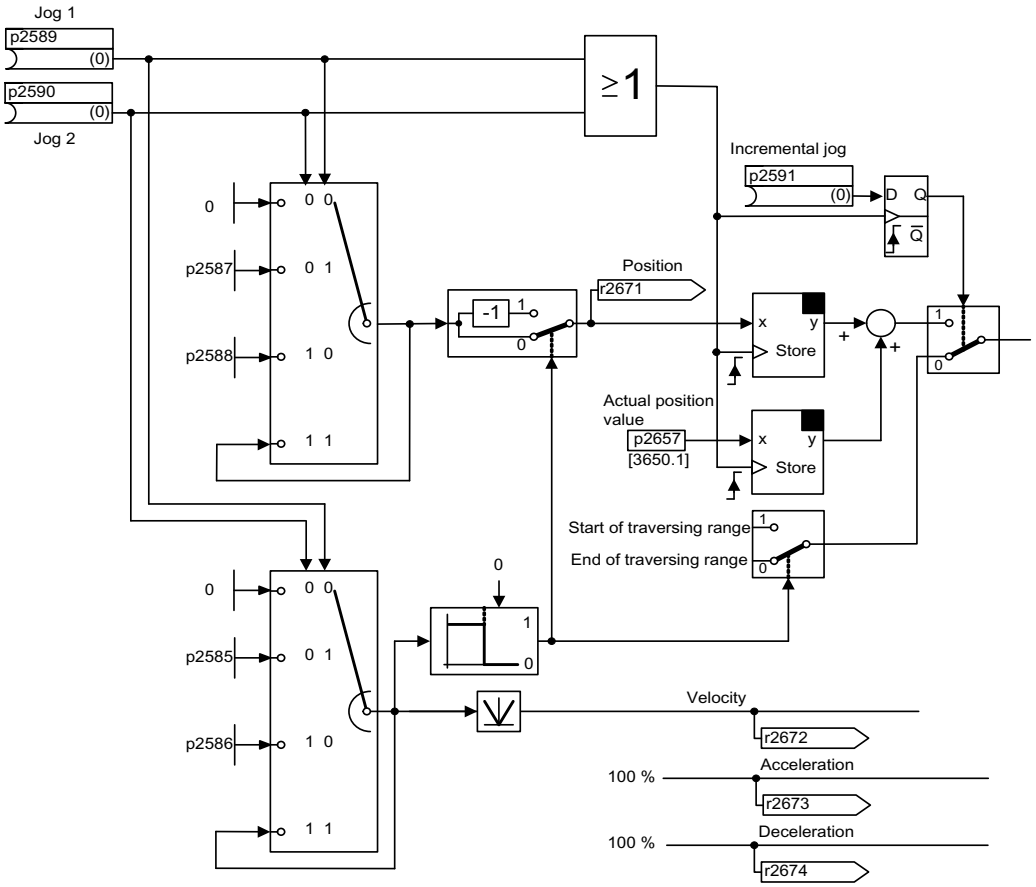

Figure 7-54 Jog mode

Function diagrams (see SINAMICS S110 List Manual)

- 3610 EPOS - jog mode

Overview of important parameters (see SINAMICS S110 List Manual)

- p2585 EPOS jog 1 setpoint velocity
- p2586 EPOS jog 2 setpoint velocity
- p2587 EPOS jog 1 traversing distance
- p2588 EPOS jog 2 traversing distance
- p2589 BI: EPOS jog 1 signal source
- p2590 BI: EPOS jog 2 signal source
- p2591 BI: EPOS jog incremental

7.3.6.9 Status signals

The status signals relevant to positioning mode are described below.

Tracking mode active (r2683.0)

The "Follow-up active mode" status signal shows that follow-up mode has been activated which can be done by binector input p2655 (follow-up mode) or by a fault. In this status, the position setpoint follows the actual position value, i.e. position setpoint = actual position value.

Setpoint static (r2683.2)

The status signal "setpoint static" indicates that the setpoint velocity has a value of 0. The actual velocity can deviate from zero due to a following error. While the status word has a value of 0, a traversing task is being processed.

Traversing command active (r2684.15)

The status signal "traversing command active" indicates that a traversing command is active. A motion command should be understood to comprise all motions (including jog, setup etc.). Contrary to the status signal "setpoint static", the status signal remains active - e.g. if a traversing command was stopped by a velocity override or intermediate stop.

SW limit switch + reached (r2683.7)
SW limit switch - reached (r2683.6)

These status signals indicate that the parameterized negative p2578/p2580 or positive p2579/p2581 traversing range limit was reached or passed. If both status signals are 0, the drive is located within the traversing limits.

Stop cam minus active (r2684.13)
Stop cam plus active (r2684.14)

These status signals indicate that the STOP cam minus p2569 or STOP cam plus p2570 has been reached or passed. The signals are reset if the cams are left in a directly opposing the approach direction.

Axis moves forwards (r2683.4)
Axis moves backwards (r2683.5)
Axis accelerates (r2684.4)
Drive decelerates (r2684.5)
Drive stationary (zero speed) (r2199.0)

These signals display the current motion status. If the actual absolute speed is less or equal to p2161, then the status signal "drive stationary" is set - otherwise it is deleted. The signals are appropriately set if jog mode, reference point approach or a traversing task is active.

Cam switching signal 1 (r2683.8)
Cam switching signal 2 (r2683.9)

The electronic cam function can be implemented using these signals. Cam switching signal 1 is 0 if the actual position is greater than p2547 - otherwise 1. Cam switching signal 2 is 0 if the actual position is greater than p2548 - otherwise 1. This means that the signal is deleted if the drive is located behind (after) the cam switching position. The position controller initiates these signals.

Direct output 1 (r2683.10)
Direct output 2 (r2683.11)

If a digital output is parameterized, the function "direct output 1" or "direct output 2", then it can be set by a corresponding command in the traversing task (SET_O) or reset (RESET_O).

Following error in tolerance (r2684.8)

When the axis is traversed, closed-loop position controlled, using a model, the permissible following error is determined from the instantaneous velocity and the selected Kv factor. Parameter p2546 defines a dynamic following error window that defines the permissible deviation from the calculated value. The status signal indicates as to whether the following error is within the window (status 1).

Target position reached (r2684.10)

The status signal "target position reached" indicates that the drive has reached its target position at the end of a traversing command. This signal is set as soon as the actual drive position is within the positioning window p2544 and is reset, if it leaves this window.

The status signal is not set, if

- Signal level 1 at binector input p2554 "signal traversing command active".
- Signal level 0 at binector input p2551 "signal setpoint static".

The status signal remains set, until

- Signal level 1 at binector input p2551 "signal setpoint static".

Reference point set (r2684.11)

The signal is set as soon as referencing has been successfully completed. It is deleted as soon as no reference is there or at the start of the reference point approach.

Acknowledgement, traversing block activated (r2684.12)

A positive edge is used to acknowledge that in the mode "traversing blocks" a new traversing task or setpoint was transferred (the same signal level as binector input p2631 activate traversing task). In the mode "direct setpoint input / MDI for setting-up/positioning" a positive edge is used to acknowledge that a new traversing task or setpoint was transferred (the same signal level as binector input p2650 "edge setpoint transfer", if the transfer type was selected using a signal edge (binector input p2649 "0" signal)).

Velocity limiting active (r2683.1)

If the actual setpoint velocity exceeds the maximum velocity p2571 - taking into account the velocity override - it is limited and the control signal is set.

7.3.7 Extended setpoint channel

Description

In the servo control mode, the extended setpoint channel is deactivated by default. If an extended setpoint channel is required, it has to be activated. The extended setpoint channel is always activated in the vector control mode.

Properties of servo mode without the "extended setpoint channel" function module

- The setpoint is directly interconnected to p1155[D] (e.g. from a higher-level control or technology controller)
- Dynamic Servo Control (DSC) only

  When using DSC, the "extended setpoint channel" is not used. This unnecessarily uses the computation time of the Control Unit and, for servo, can be deactivated.
- Deceleration ramp OFF1 via p1121[D]
- Deceleration ramp OFF3 via p1135[D]
- For PROFIdrive telegrams 2 to 103 and 999 only (free assignment)
- STW 1 bit 5 (freeze ramp-function generator), no function

7.3.7.1 Activation of the "extended setpoint channel" function module

The "extended setpoint channel" function module can be activated via the commissioning Wizard or the drive configuration (configure DDS).

You can check the current configuration in parameter r0108.8. Once you have set the configuration, you must download it to the Control Unit where it is stored in a non-volatile memory.

7.3.7.2 Description

In the extended setpoint channel, setpoints from the setpoint source are conditioned for motor control.

The setpoint for motor control can also originate from the technology controller (see "Technology controller").

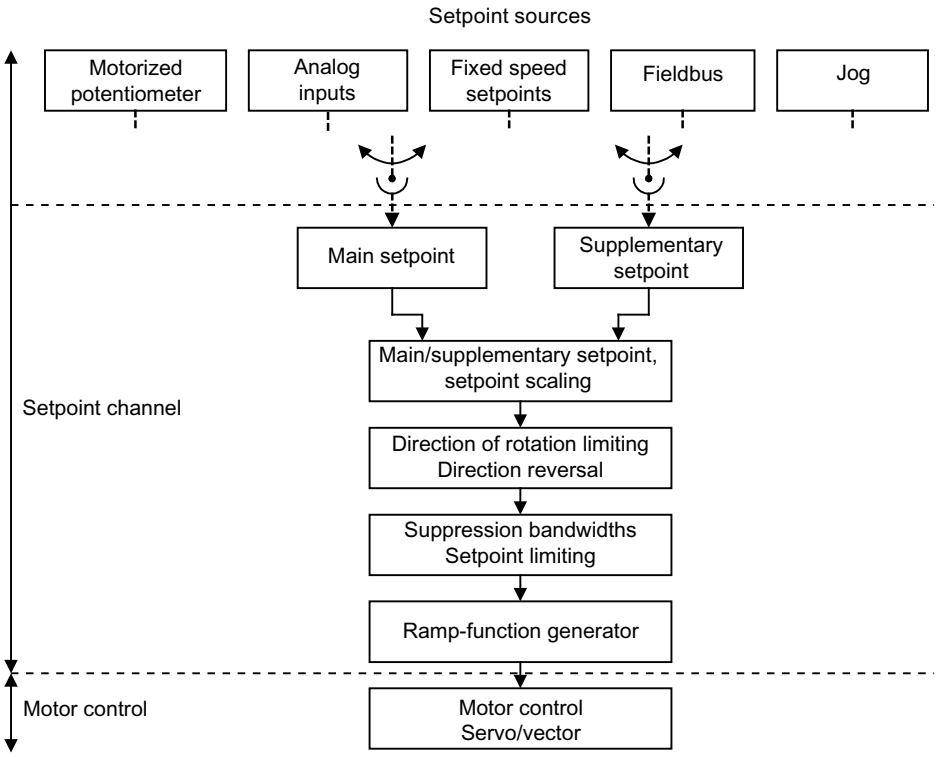

Figure 7-55 Extended setpoint channel

Properties of the extended setpoint channel

- Main/supplementary setpoint, setpoint scaling
- Direction of rotation limiting and direction of rotation changeover
- Suppression bandwidths and setpoint limitation
- Ramp-function generator

Setpoint sources

The closed-loop control setpoint can be interconnected from various sources using BICO technology (e.g. to p1070 CI: main setpoint (see function diagram 3030)).

There are various options for setpoint input:

- Fixed speed setpoints
- Motorized potentiometer
- Jog
- Field bus
  - Setpoint via PROFIBUS, for example
- About the analog input AI of the CU 305

7.3.7.3 Jog

Description

This function can be selected via digital inputs or via a field bus (e.g. PROFIBUS). The setpoint is, therefore, predefined via p1058[D] and p1059[D].

When a jog signal is present, the motor is accelerated to the jog setpoint with the acceleration ramp of the ramp-function generator (referred to the maximum speed p1082; see diagram "Function chart: jog 1 and jog 2"). After the jog signal has been deselected, the motor is decelerated via the set ramp of the ramp-function generator.

CAUTION
The "Jog" function is not PROFIdrive-compliant!

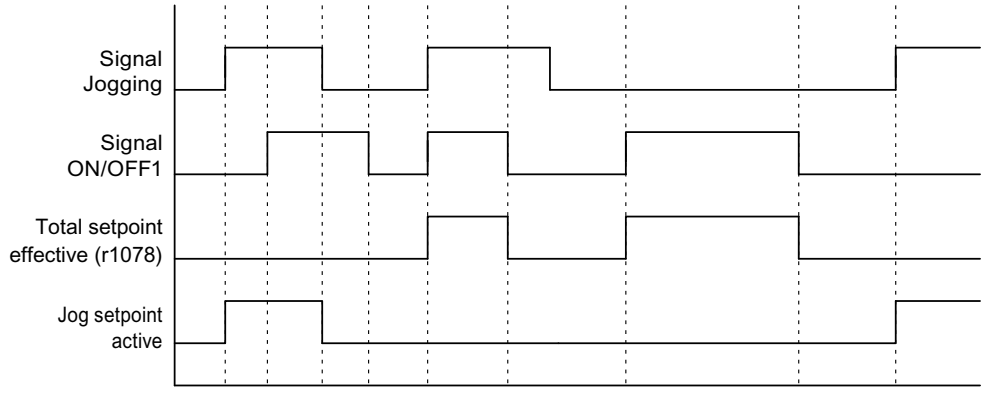

Figure 7-56 Function chart: jog and OFF1

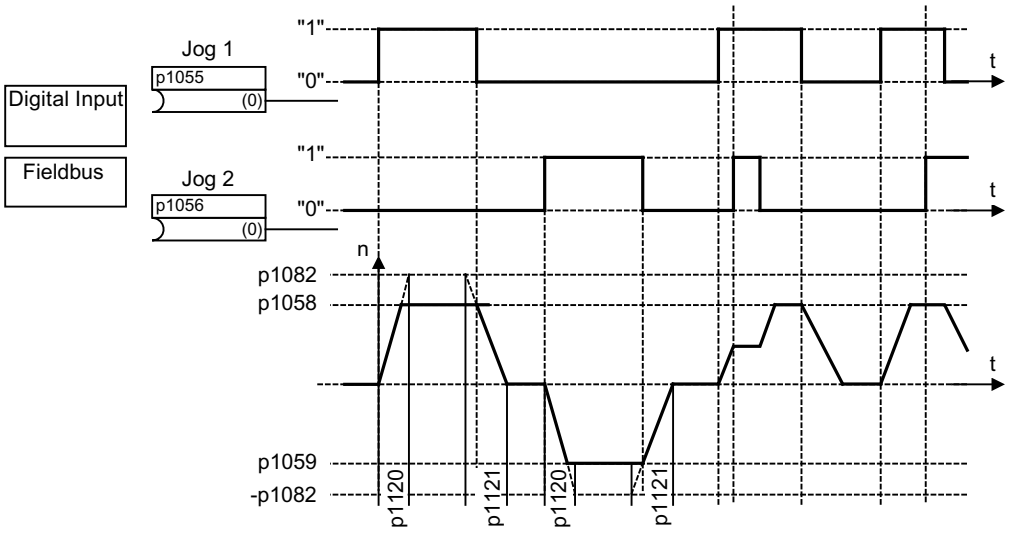

Figure 7-57 Function chart: jog 1 and jog 2

Jog properties

- If both jog signals are issued at the same time, the current speed is maintained (constant velocity phase).
- Jog setpoints are approached and exited via the ramp-function generator.
- The jog function can be activated from the "ready for switching on" status and from the OFF1 deceleration ramp.
- If ON/OFF1 = "1" and jog are selected simultaneously, ON/OFF1 has priority.
- OFF2 and OFF3 have priority over jog.
- In jog mode, the main speed setpoints (r1078) and the supplementary setpoints 1 and 2 (p1155 and p1160) are inhibited.
- The suppression bandwidths (p1091 ... p1094) and the minimum limit (p1080) in the setpoint channel are also active in jog mode.
- In jog mode, ZSWA.02 (operation enabled) is set to "0" because the speed setpoint has not been enabled for control.
- The ramp-function generator cannot be frozen (via p1141) in jog mode (r0046.31 = 1).

Jog sequence

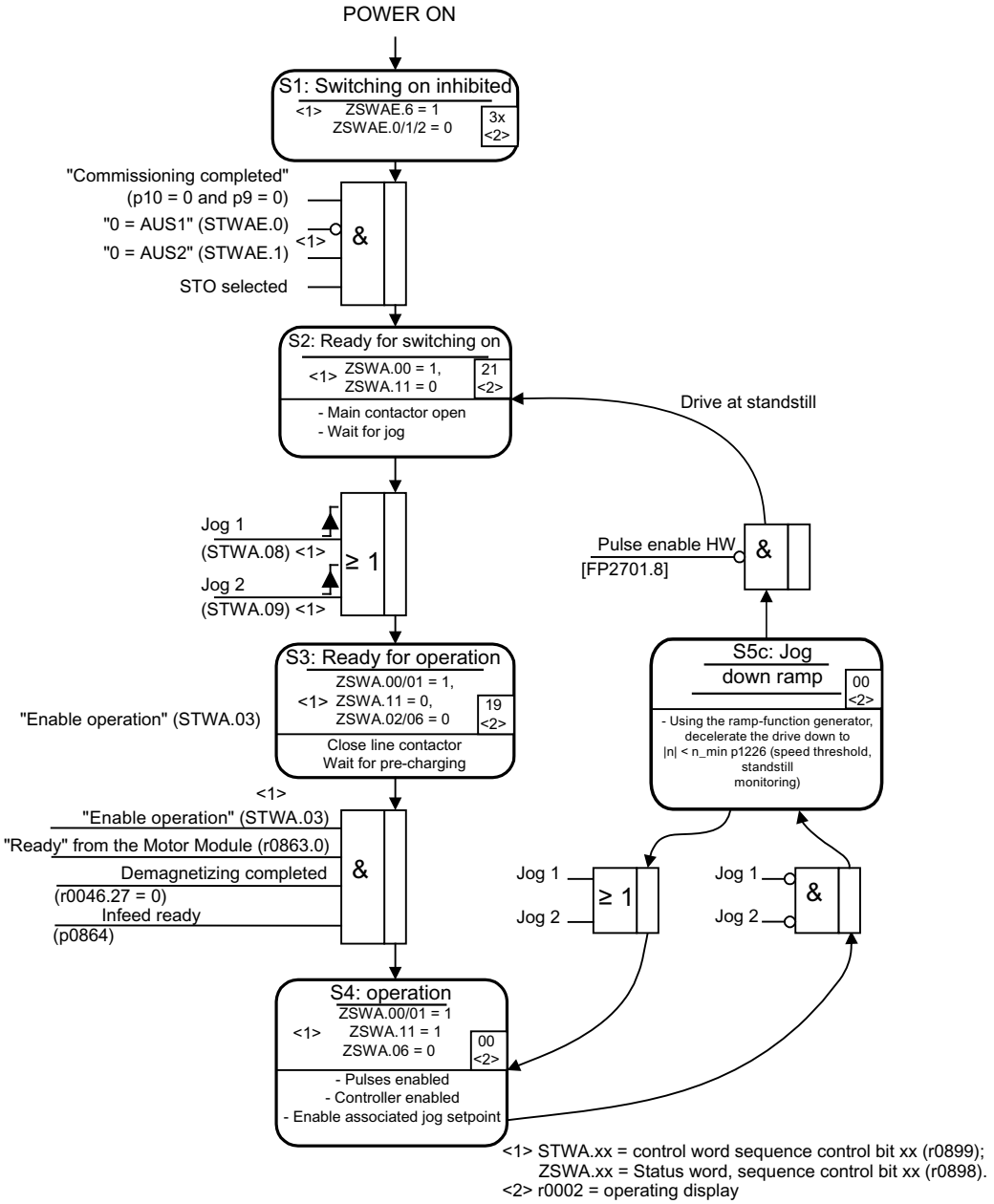

Figure 7-58 Jog sequence

Control and status messages

Table 7- 27 Jog control

Signal name	Internal control word	Binector input	PROFIdrive/Siemens telegram 1 ... 111
0 = OFF1	STWA.0	p0840 ON/OFF1	STW1.0
0 = OFF2	STWA.1	p0844 1. OFF2 p0845 2. OFF2	STW1.1
0 = OFF3	STWA.2	p0848 1. OFF3 p0849 2. OFF3	STW1.2
Enable operation	STWA.3	p0852 Enable operation	STW1.3
Jog 1	STWA.8	p1055 Jog bit 0	STW1.8
Jog 2	STWA.9	p1056 Jog bit 1	STW1.9

Table 7- 28 Jog status message

Signal name	Internal status word	Parameter	PROFIdrive/Siemens telegram 1 ... 111
Ready to start	ZSWA.0	r0899.0	ZSW1.0
Ready for operation	ZSWA.1	r0899.1	ZSW1.1
Operation enabled	ZSWA.2	r0899.2	ZSW1.2
Switching on inhibited	ZSWA.6	r0899.6	ZSW1.6
Pulses enabled	ZSWA.11	r0899.11	ZSW1.11

Function diagrams (see SINAMICS S110 List Manual)

- 2610 Sequence control - sequencer
- 3030 Setpoint addition, setpoint scaling, jog

Overview of important parameters (see SINAMICS S110 List Manual)

- p1055[C] BI: Jog bit 0
- p1056[C] BI: Jog bit 1
- p1058[D] Jog 1 speed setpoint
- p1059[D] Jog 2 speed setpoint
- p1082[D] Maximum speed
- p1120[D] Ramp-function generator ramp-up time
- p1121[D] Ramp-function generator ramp-down time

Parameterization with STARTER

The "speed setpoint" parameter screen is selected via the following icon in the toolbar of the STARTER commissioning tool.

Figure 7-59 STARTER icon for "speed setpoint"

7.3.7.4 Fixed speed setpoints

Description

This function can be used to specify preset speed setpoints. The fixed setpoints are defined in parameters and selected via binector inputs. Both the individual fixed setpoints and the effective fixed setpoint are available for further interconnection via a connector output (e.g. to connector input p1070 - CI: main setpoint).

Properties

- Number of fixed setpoints: Fixed setpoint 1 to 15
- Selection of fixed setpoints: Binector input bits 0 to 3
  - Binector input bits 0, 1, 2, and 3 = 0 → setpoint = 0 active
  - Unused binector inputs have the same effect as a "0" signal

Function diagrams (see SINAMICS S110 List Manual)

- 1550 Overviews - setpoint channel
- 3010 Fixed speed setpoints

Overview of important parameters (see SINAMICS S110 List Manual)

Adjustable parameters

- p1001[D] CO: Fixed speed setpoint 1
- ...
- p1004[D] CO: Fixed speed setpoint 4
- p1020[C] BI: Fixed speed setpoint selection Bit 0
- p1021[C] BI: Fixed speed setpoint selection Bit 1

Display parameters

- r1024 CO: Fixed speed setpoint effective
- r1197 Fixed speed setpoint current number

Parameterization with STARTER

The "fixed setpoints" parameter screen is activated in the project navigator under the relevant drive by double-clicking Setpoint channel → Fixed setpoints in the STARTER commissioning tool.

7.3.7.5 Motorized potentiometer

Description

This function is used to simulate an electromechanical potentiometer for setpoint input.

You can switch between manual and automatic mode for setpoint input. The specified setpoint is routed to an internal ramp-function generator. Setting values, start values and braking with OFF1 do not require the ramp-function generator of the motorized potentiometer.

The output of the ramp-function generator for the motorized potentiometer is available for further interconnection via a connector output (e.g. interconnection to connector input p1070 - CI: main setpoint, an additional ramp-function generator is then active).

Properties for manual mode (p1041 = "0")

- Separate binector inputs for Raise and Lower are used to adjust the input setpoint:
  - p1035 BI: Motorized potentiometer, setpoint, raise
  - p1036 BI: Motorized potentiometer, setpoint, lower
- Invert setpoint (p1039)
- Configurable ramp-function generator, e.g.:
  - Ramp-up/ramp-down time (p1047/p1048) referred to p1082
  - Setting value (p1043/p1044)
  - Initial rounding active/not active (p1030.2)
- Non-volatile storage via p1030.3
- Configurable setpoint for Power ON (p1030.0)
  - Starting value is the value in p1040 (p1030.0 = 0)
  - Starting value is the stored value (p1030.0 = 1)

Properties for automatic mode (p1041 = "1")

- The input setpoint is specified via a connector input (p1042).
- The motorized potentiometer acts like a "normal" ramp-function generator.
- Configurable ramp-function generator, e.g.:
  - Switch on/off (p1030.1)
  - Ramp-up/ramp-down time (p1047/p1048)
  - Setting value (p1043/p1044)
  - Initial rounding active/not active (p1030.2)
- Non-volatile storage of the setpoints via p1030.3
- Configurable setpoint for Power ON (p1030.0)
  - Starting value is the value in p1040 (p1030.0 = 0)
  - Starting value is the stored value (p1030.0 = 1)

Function diagrams (see SINAMICS S110 List Manual)

- 1550 Setpoint channel
- 2501 Control word sequence control
- 3020 Motorized potentiometer

Overview of important parameters (see SINAMICS S110 List Manual)

- p1030[D] Motorized potentiometer, configuration
- p1035[C] BI: Motorized potentiometer, setpoint, raise
- p1036[C] BI: Motorized potentiometer, setpoint, lower
- p1037[D] Motorized potentiometer, maximum speed
- p1038[D] Motorized potentiometer, minimum speed
- p1039[C] BI: Motorized potentiometer, inversion
- p1040[D] Motorized potentiometer, starting value
- p1041[C] BI: Motorized potentiometer, manual/automatic
- p1042[C] CI: Motorized potentiometer, automatic setpoint
- p1043[C] BI: Motorized potentiometer, accept setpoint
- p1044[C] CI: Motorized potentiometer, setting value
- r1045 CO: Motorized potentiometer, speed setpoint in front of the ramp-function generator
- p1047[D] Motorized potentiometer, ramp-up time
- p1048[D] Motorized potentiometer, ramp-down time
- r1050 CO: Motorized potentiometer, setpoint after the ramp-function generator
- p1082[D] Maximum speed

Parameterization with STARTER

The "motorized potentiometer" parameter screen is activated in the project navigator under the relevant drive by double-clicking Setpoint channel → Motorized potentiometer in the STARTER commissioning tool.

7.3.7.6 Main/supplementary setpoint and setpoint modification

Description

The supplementary setpoint can be used to incorporate correction values from lower-level controllers. This can be easily carried out using the addition point for the main/supplementary setpoint in the setpoint channel. Both variables are imported simultaneously via two separate or one setpoint source and added in the setpoint channel.

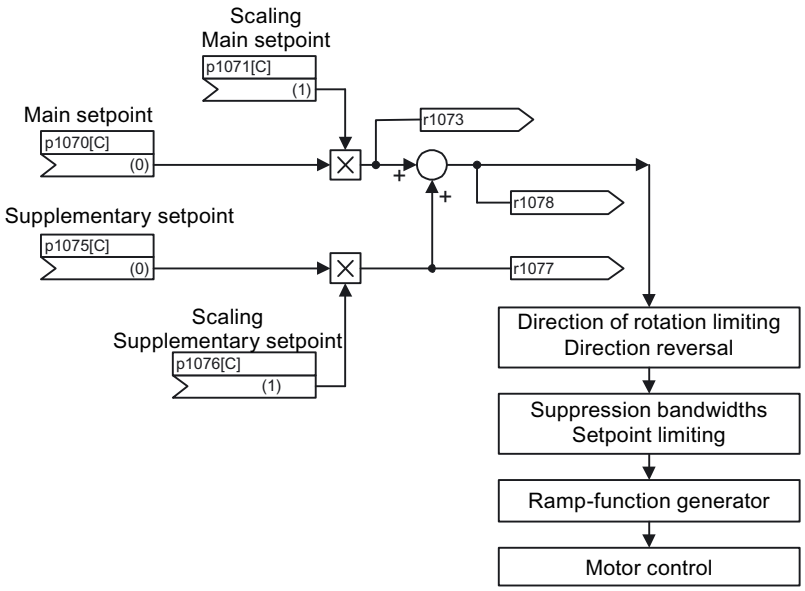

Figure 7-60 Setpoint addition, setpoint scaling

Function diagrams (see SINAMICS S110 List Manual)

- 1550 Setpoint channel
- 3030 Main/supplementary setpoint, setpoint scaling, jog

Overview of important parameters (see SINAMICS S110 List Manual)

Adjustable parameters

- p1070[C] CI: Main setpoint
- p1071[C] CI: Main setpoint scaling
- p1075[C] CI: Supplementary setpoint
- p1076[C] CI: Supplementary setpoint scaling

Display parameters

r1073[C] CO: Main setpoint effective

r1077[C] CO: Supplementary setpoint effective

r1078[C] CO: Total setpoint effective

Parameterization with STARTER

The "speed setpoint" parameter screen is selected via the following icon in the toolbar of the STARTER commissioning tool:

7.3.7.7 Direction limitation and setpoint inversion

Description

A reverse operation involves a direction reversal. Selecting setpoint inversion p1113[C] can reverse the direction in the setpoint channel.

Parameter p1110[C] or p1111[C] can be set respectively to prevent input of a negative or positive setpoint via the setpoint channel. However, the following settings for minimum speed (p1080) in the setpoint channel are still operative. With the minimum speed, the motor can turn in a negative direction, although p1110 = 1 is set.

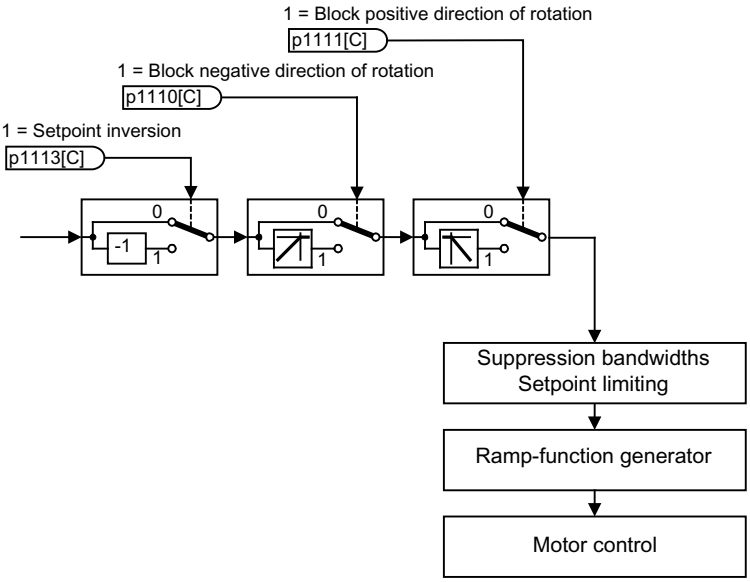

Figure 7-61 Direction of rotation limiting and direction of rotation changeover

Function diagrams (see SINAMICS S110 List Manual)

- 1550 Setpoint channel
- 3040 Direction limitation and direction reversal

Overview of important parameters (see SINAMICS S110 List Manual)

Adjustable parameters

- p1110[C] BI: Inhibit negative direction
- p1111[C] BI: Inhibit positive direction
- p1113[C] BI: Setpoint inversion

Parameterization with STARTER

The "speed setpoint" parameter screen is selected via the following icon in the toolbar of the STARTER commissioning tool:

7.3.7.8 Suppression bandwidths and setpoint limits

Description

In the range 0 U/min to setpoint speed, a drive train (e.g. motor, coupling, shaft, machine) can have one or more points of resonance, which can result in vibrations. The suppression bandwidths can be used to prevent operation in the resonance frequency range.

The limit speeds can be set via p1080[D] and p1082[D]. These limits can also be changed during operation with the connectors p1085[C] and p1088[C].

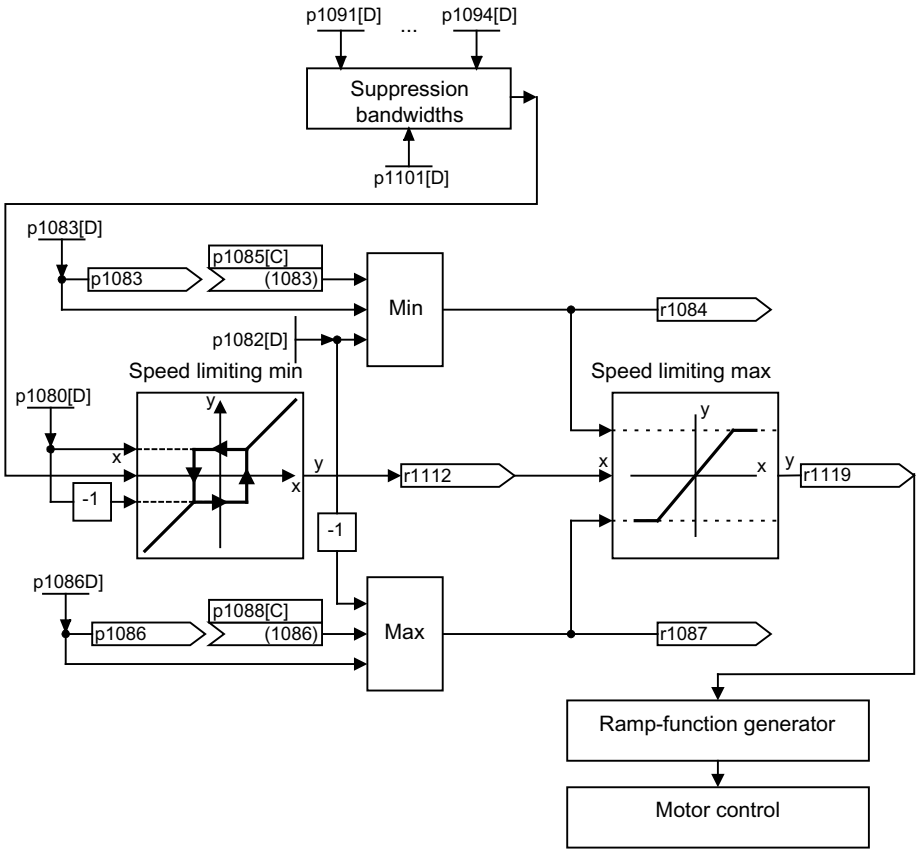

Figure 7-62 Suppression bandwidths, setpoint limitation

Function diagrams (see SINAMICS S110 List Manual)

- 1550 Setpoint channel
- 3050 Suppression bandwidth and speed limiting

Overview of important parameters (see SINAMICS S110 List Manual)

Setpoint limitation

- p1080[D] Minimum speed
- p1082[D] Maximum speed
- p1083[D] CO: Speed limit in positive direction of rotation
- r1084 Speed limit positive effective
- p1085[C] CI: Speed limit in positive direction of rotation
- p1086[D] CO: Speed limit negative direction of rotation
- r1087 Speed limit negative effective
- p1088[C] DI: Speed limit negative direction of rotation
- r1119 Ramp-function generator setpoint at the input

Suppression bandwidths

- p1091[D] Suppression speed 1
- ...
- p1094[D] Suppression speed 4
- p1101[D] Suppression speed bandwidth

Parameterization with STARTER

The "speed limitation" parameter screen is selected by activating the following icon in toolbar of the STARTER commissioning tool:

Figure 7-63 STARTER icon for "speed limitation"

7.3.7.9 Ramp-function generator

Description

The ramp-function generator is used to limit acceleration in the event of abrupt setpoint changes, which helps prevent load surges throughout the drive train. The ramp-up time p1120[D] and ramp-down time p1121[D] can be used to set mutually independent acceleration and deceleration ramps. This allows a controlled transition to be made in the event of setpoint changes.

The maximum speed p1082[D] is used as a reference value for calculating the ramps from the ramp-up and ramp-down times. A special adjustable ramp can be set via p1135 for quick stop (OFF3), e.g. for rapid controlled deceleration when an emergency OFF button is pressed.

There are two types of ramp-function generator:

- Basic ramp-function generator with
  - Acceleration and deceleration ramps
  - Ramp for quick stop (OFF3)
  - Tracking configurable via parameter p1145
  - Setting values for the ramp-function generator
- The extended ramp-function generator also has
  - Initial and final rounding off

Note

The ramp-function generator cannot be frozen (via p1141) in jog mode (r0046.31 = 1).

Properties of the basic ramp-function generator

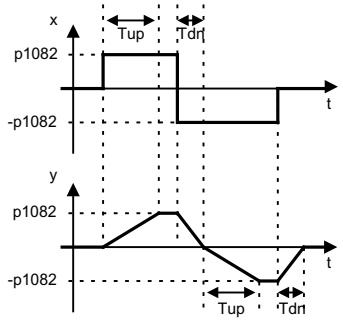

Figure 7-64 Ramp-up and ramp-down with the basic ramp-function generator

- RFG ramp-up time Tup p1120[D]
- RFG ramp-down time Tdn p1121[D]
- OFF3 deceleration ramp
  - OFF3 ramp-down time p1135[D]

- Set ramp-function generator
  - Ramp-function generator setting value p1144[C]
  - Set ramp-function generator signal p1143[C]
- Freezing of the ramp-function generator using p1141 (not in jog mode r0046.31 = 0)

Properties of the extended ramp-function generator

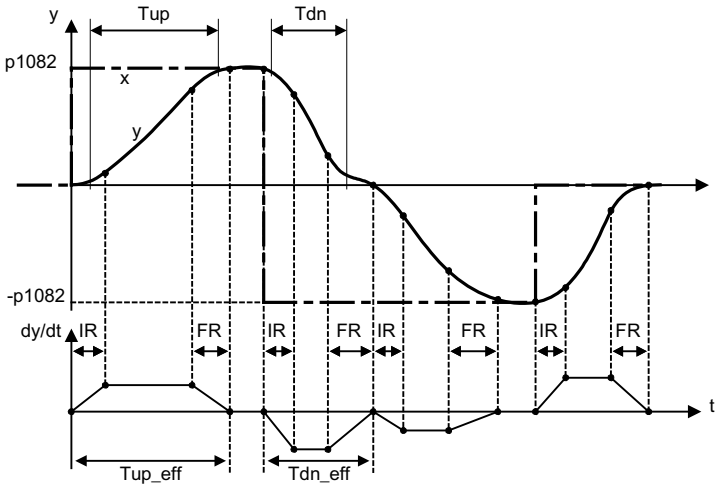

Figure 7-65 Extended ramp-function generator

- RFG ramp-up time Tup p1120[D]
- RFG ramp-down time Tdn p1121[D]
- Initial rounding IR p1130[D]
- Final rounding FR p1131[D]
- Effective ramp-up time
  Tup_eff = Tup + (IR/2 + FR/2)
- Effective ramp-down time
  Tdn_eff = Tdn + (IR/2 + FR/2)
- OFF3 deceleration ramp
  OFF3 ramp-down time p1135[D]
  OFF3 initial rounding p1136[D]
  OFF3 final rounding p1137[D]
- Set ramp-function generator
  - Ramp-function generator setting value p1144[C]
  - Set ramp-function generator signal p1143[C]

- Select ramp-function generator rounding type p1134[D]
  - p1134 = "0": continuous smoothing rounding is always active. Overshoots may occur. If the setpoint changes, final rounding is carried out and then the direction of the new setpoint is adopted.
  - p1134 = "1": non-continuous smoothing changes immediately to the direction of the new setpoint when the setpoint is changed.
- Configure ramp-function generator, deactivate rounding at zero crossing p1151[D]
- Freezing of the ramp-function generator using p1141 (not in jog mode r0046.31 = 0)

Ramp-function generator tracking

If the drive is in the area of the torque limits, the actual speed value is removed from the speed setpoint. The ramp-function generator tracking updates the speed setpoint in line with the actual speed value and so levels the ramp. p1145 can be used to deactivate ramp-function generator tracking (p1145 = 0) or set the permissible following error (p1145 > 1). If the permissible following error is reached, then the speed setpoint at the ramp-function generator output will only be further increased in the same proportion as the actual speed value.

Ramp-function generator tracking can be activated for the basic and the extended ramp-function generators.

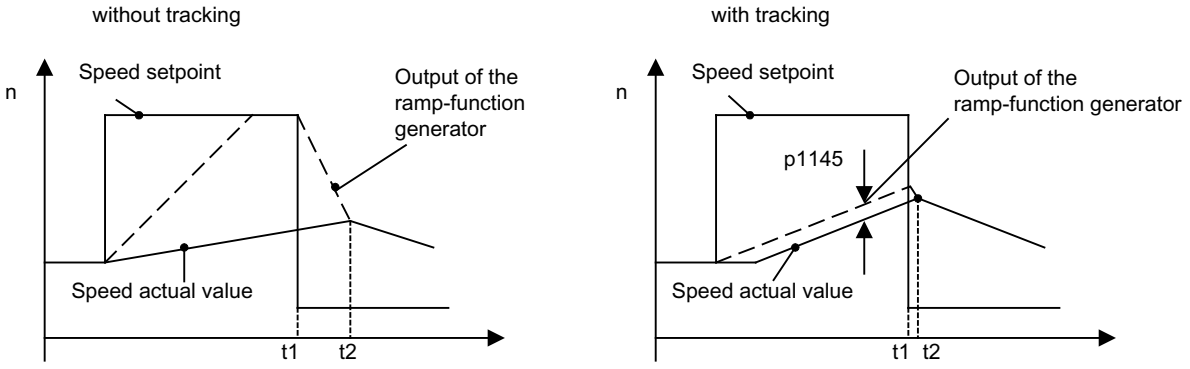

Figure 7-66 Ramp-function generator tracking

Without ramp-function generator tracking

- p1145 = 0
- Drive accelerates until t2 although setpoint < actual value

With ramp-function generator tracking

- At p1145 > 1 (values between 0 and 1 are not applicable), ramp-function generator tracking is activated when the torque limit is approached. The ramp-function generator output thereby only exceeds the actual speed value by a deviation value that can be defined in p1145.
- t1 and t2 almost identical

Function diagrams (see SINAMICS S110 List Manual)

- 1550 Setpoint channel
- 3060 Basic ramp-function generator
- 3070 Extended ramp-function generator
- 3080 Ramp-function generator selection, status word, tracking

Signal overview (see SINAMICS S110 List Manual)

- Control signal STW1.2 OFF3
- Control signal STW1.4 Enable ramp-function generator
- Control signal STW1.5 Start/stop ramp-function generator
- Control signal STW1.6 Enable setpoint
- Control signal STW2.1 Bypass ramp-function generator

Parameterization with STARTER

The "ramp-function generator" parameter screen is selected via the following icon in the toolbar of the STARTER commissioning tool:

Figure 7-67 STARTER icon for "ramp-function generator"

Overview of important parameters (see SINAMICS S110 List Manual)

Adjustable parameters

- p1115 Ramp-function generator selection
- p1120[D] Ramp-function generator ramp-up time
- p1121[D] Ramp-function generator ramp-down time
- p1122[C] BI: Bypass ramp-function generator
- p1130[D] Ramp-function generator initial rounding time
- p1131[D] Ramp-function generator final rounding time
- p1134[D] Ramp-function generator rounding type
- p1135[D] OFF3 ramp-down time
- p1136[D] OFF3 initial rounding time
- p1137[D] OFF3 final rounding time
- p1140[C] BI: Enable ramp-function generator
- p1141[C] BI: Start ramp-function generator
- p1143[C] BI: Ramp-function generator, accept setting value

- p1144[C] CI: Ramp-function generator setting value
- p1145[D] Ramp-function generator tracking
- p1148 [D] Ramp-function generator tolerance for ramp-up and ramp-down active
- p1151 [D] Ramp-function generator configuration

Display parameters

- r1119 CO: Ramp-function generator setpoint at the input
- p1149 Ramp-function generator acceleration
- r1150 CO: Ramp-function generator speed setpoint at the output

7.3.8 Free function blocks

7.3.8.1 Overview

Application, properties

A logic operation, which connects several states (e.g. access control, plant status) to a control signal (e.g. ON command), is required for controlling the drive system in a wide variety of applications.

Along with logic operations, a number of mathematical functions and storing elements are becoming increasingly important in drive systems.

This functionality is only available as a "free function blocks" function module (FBLOCKS) on the SERVO drive object type of SINAMICS S110.

In the free function blocks, analog signals are treated as dimensionless per unit variables (see the "Connection to the drive" chapter).

Note

This additional functionality increases the calculation time load. This means that the maximum possible configuration with a Control Unit may be restricted (see the "Calculation time load" chapter).

Configuration and operation

The free function blocks are configured at the parameter level. The following parameters are required for this:

- Input parameters (e.g. inputs I0 ... I3 for the AND function block).
- Output parameters (e.g. output Y for numeric change-over switch NSW).
- Adjustable parameters (e.g. pulse duration for pulse generator MFP).
- Runtime group (this includes the sampling time; the free function blocks are not computed in the factory setting).
- Run sequence within the runtime group.

A parameter is assigned to each input, output, and adjustable variable. These can be accessed with the STARTER commissioning software or via the BOP. The "free function blocks" can all be interconnected at BICO level.

The "free function blocks" do not support data set dependency.

Runtime group, sampling time, and run sequence

Runtime groups

Runtime groups are groups of free function blocks within the system that are computed in the same sampling time and at a specific time.

A total of 10+1 "runtime groups" (runtime group 0 to 9 and runtime group 9999 (= runtime group is not computed)) are available for which the sampling time can be set in specific intervals.

Each function block is assigned one runtime group via a parameter. In the factory setting, the value 9999 (i.e. the function block is not computed) is assigned to each function block.

Example:

For function block ADD 0 (see the SINAMICS S110 List Manual, function diagram 7220), the runtime group is set in p20096.

The runtime groups are divided into one "fixed runtime group" and several "free runtime groups".

- The "fixed runtime group" is called at a defined point in the system runtime. The sole fixed runtime group (p20000[x] = 9003) is arranged before the setpoint channel and calculated in the sampling time of the setpoint channel (4 ms). This set value is only available for the SERVO drive object type.
- The "free runtime groups" are only defined via their sampling time.

Note

If the same sampling time is assigned to two or more runtime groups (the same fixed or free runtime group), the runtime groups are processed in numerical order.

Example

p20000[0] = p20000[3] = p20000[9] = 9003
The computing sequence is:
runtime group 0 first, then runtime group 3, then runtime group 9, and then the setpoint channel.

The minimum sampling time is 1 ms.

The actual sampling time in ms is displayed for each runtime group in parameter r20001[0...9].

In the factory setting, none of the runtime groups is called (p20000[x] = 0).

Note

The assignment of a runtime group can only be changed if closed loop control is disabled. When changing, the runtime group involved is first logged off from the sampling time management and then logged on again with the new assignment. The runtime group is not calculated during this operation.

Logon and logoff are performed in a background process of the drive unit. This is the reason that duration is not defined and depends on the actual calculation time load. This influences the output signal characteristic in the case of time-dependent blocks (e.g. DIF derivative action element). Prior to the first computation cycle after logging back on, internal status variables of the blocks are partially reset.

For both of these reasons, this can result in jumps in the output signal of blocks, which for example can influence the torque/force setpoint and, for axes in operation, the torque/force actual value as well. Logic signals can also assume an unexpected state at this instant.

Sampling times

Two types of sampling times are available for runtime groups:

- Sampling times generated in the hardware:

  Every integer multiple of the basic sampling time (r20002) can be generated as a sampling time in p20000[0...9] in the range from 1 x r20002 to 256 x r20002, subject to the following limits:

  – Min. sampling time = 1 ms

  – Max. sampling time = r20003

  Sampling times of 1 ms ... r20003 - r20002 are generated in the hardware from these.

  Note

  As regards offline configuration using STARTER commissioning software, values 0 ... 256 can be entered in p20000[x], even if this violates the limits stated above for the hardware sampling times from 1 ms ... r20003 - r20002 and r20003.

  This will only be detected after the Control Unit has been downloaded and generates fault F01042 (parameter error during project download).

  The basic sampling time for the SERVO drive object type in SINAMICS S110 is as follows:

  r20002 = 0.25 ms (current controller sampling time)

- Sampling times generated in the software:

  These sampling times are generated as integer multiples of the basic value for software sampling times and must be read in parameter r20003 when the "free function blocks" function module is active.

  For the possible set values for the software sampling times, refer to the parameter description for p20000 (see SINAMICS S110 List Manual).

  Note

  When p20000[k] = 0, the corresponding runtime group (and, in turn, all the associated function blocks) is not computed.

  The sampling time of runtime group k is displayed in r20001[k] in ms.

Example for the adjustable sampling times in SINAMICS S110:

The basic sampling time (r20002) on the SERVO drive object is 250 µs, which means that the following sampling times are possible:

- Hardware sampling times:
  p20000[x] = 0 (runtime group not computed)
  p20000[x] = 1 x 250 µs = 250 µs (not permitted because less than 1 ms)
  p20000[x] = 2 x 250 µs = 500 µs (not permitted because less than 1 ms)
  p20000[x] = 3 x 250 µs = 750 µs (not permitted because less than 1 ms)
  p20000[x] = 4 x 250 µs = 1000 µs
  p20000[x] = 5 x 250 µs = 1250 µs
  ...
  p20000[x] = 31 x 250 µs = 7750 µs (longest hardware sampling time)
  p20000[x] = 32 x 250 µs = 8000 µs (can be selected as a multiple of r20002 - but is a software sampling time)
  p20000[x] = 33 x 250 µs = 8250 µs (rejected because greater than r20003!)
  The settings below are no longer possible because the sampling times would exceed 8 ms.

  The basic value of the software sampling time is: r20003 = 8 ms.

- Software sampling times:
  p20000[x] = 1001: Sampling time = 1 x 8 ms = 8 ms
  p20000[x] = 1002: Sampling time = 2 x 8 ms = 16 ms
  p20000[x] = 1003: Sampling time = 3 x 8 ms = 24 ms
  p20000[x] = 1004: Sampling time = 4 x 8 ms = 32 ms
  p20000[x] = 1005: Sampling time = 5 x 8 ms = 40 ms
  p20000[x] = 1006: Sampling time = 6 x 8 ms = 48 ms
  p20000[x] = 1008: Sampling time = 8 x 8 ms = 64 ms
  p20000[x] = 1010: Sampling time = 10 x 8 ms = 80 ms
  p20000[x] = 1012: Sampling time = 12 x 8 ms = 96 ms
  p20000[x] = 1016: Sampling time = 16 x 8 ms = 128 ms
  p20000[x] = 1020: Sampling time = 20 x 8 ms = 160 ms
  p20000[x] = 1024: Sampling time = 24 x 8 ms = 192 ms
  p20000[x] = 1032: Sampling time = 32 x 8 ms = 256 ms
  p20000[x] = 1040: Sampling time = 40 x 8 ms = 320 ms
  p20000[x] = 1048: Sampling time = 48 x 8 ms = 384 ms
  p20000[x] = 1064: Sampling time = 64 x 8 ms = 512 ms
  p20000[x] = 1096: Sampling time = 96 x 8 ms = 768 ms

Note

The missing intermediate values are not permitted by the system.

Run sequence

In the factory setting, each free function block is assigned a default setting for the run sequence. The run sequence of consecutive free function blocks within a runtime group can be optimized by changing these values accordingly.

A run sequence value can be used on a drive object once only. If the same run sequence value is assigned twice in online mode for a drive object, the second value is rejected and the first value retained.

The run sequence can be set to between 0 and 32000. A function block with a lower run sequence value is computed within a runtime group before one with a higher value.

Note

If configuration is carried out OFFLINE, you can set each run sequence value at the outset (e.g. a value can also be assigned to more than one function block simultaneously). The system does not check this until the configuration has been downloaded to the Control Unit.

Once downloaded, the parameter values are checked in the order of the parameter numbers. If the system detects that the run sequence value for one function block is already being used by a different function block, the value is not applied and fault F01042 (message in STARTER: Error occurred when downloading) is output. You are informed of this in the "Target system output" window.

Note

In the factory setting, value range 10 ... 750 is already assigned the run sequence values of the function blocks.

In user configurations, for example, the only run sequence values outside this range which should be used are those above 1000. This will avoid conflicts during the download process with the run sequence values that have already been assigned.

If at all possible, the process signals for a drive object should only be processed by the function blocks on this drive object.

Range of blocks

The table below shows the range of free function blocks available. For details of individual function blocks, see the "Description of function blocks" chapter. For information on the special technical properties of the individual function blocks, see the function diagrams in the SINAMICS S110 List Manual.

Table 7- 29 Range of "free function blocks"

Short name	Name of function block	Data type	Number per drive object
AND	AND function block	BOOL	4
OR	OR function block	BOOL	4
XOR	XOR function block	BOOL	4
NOT	Inverter	BOOL	4
ADD	Adder	REAL	2
SUB	Subtracter	REAL	2
MUL	Multiplier	REAL	2
DIV	Divider	REAL	2
AVA	Absolute value generator with sign evaluation	REAL	2
MFP	Pulse generator	BOOL	2
PCL	Pulse shortener	BOOL	2
PDE	ON delay	BOOL	2
PDF	OFF delay	BOOL	2
PST	Pulse stretcher	BOOL	2
RSR	RS flip-flop, reset dominant	BOOL	2
DFR	D flip-flop, reset dominant	BOOL	2
BSW	Binary change-over switch	BOOL	2
NSW	Numeric change-over switch	REAL	2
LIM	Limiter	REAL	2
PT1	Smoothing element	REAL	2
INT	Integrator	REAL	1
DIF	Derivative-action element	REAL	1
LVM	Double-sided limit monitor with hysteresis	BOOL	2

Connection to the drive

Connector inputs (CI) and connector outputs (CO) on the free function blocks (p20094 ... p20286) have the properties of per unit variables. This means that calculations in the free function blocks are only carried out with per unit signal values (1.0 = 100%). Conversion to the connectors of the drive with units is performed automatically.

Note

The following manual contains function diagrams for "free function blocks" and all the product-dependent function diagrams available for SINAMICS S110 (e.g. function diagram 3010): SINAMICS S110 List Manual, "Function diagrams" chapter.

Example 1: Interconnecting the input value

The actual fixed speed setpoint (CO: r1024, function diagram 3010) is to be read to the free function block ADD 0 (function diagram 7220) for further processing.

p20094[0] is set to 1024 for this purpose.

Function block ADD 0 is to be called cyclically and is, therefore, assigned to runtime group 9. It is also to be called with the sampling time 2 x r20003. The runtime group number is chosen here at random.

p20096 is set to 9 and p20000[9] is set to 1002.

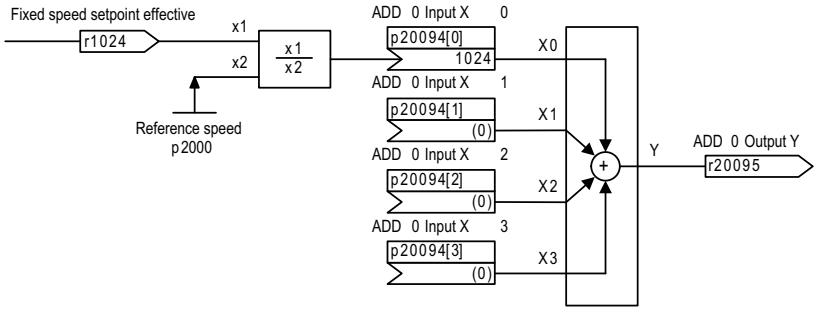

Figure 7-68 Example 1: Interconnecting the input value

Input signal r1024 with the unit rpm is referred to its reference variable p2000.

Assumption:

- r1024 = 1500 rpm
- p2000 = 3000 rpm reference speed

Result:

- r20095 = 0.5

Example 2: Interconnecting the output value

The per unit output value of the free function block LIM 0 (function diagram 7260) is to be switched in as additional torque M_additional 2 (function diagram 5060) in SERVO control mode.

p1513[0] is set to 20231 for this purpose.

Function block LIM 0 is to be called cyclically and is, therefore, assigned to runtime group 8.

p20234 is set to 8.

The runtime group number is chosen here at random.

The sampling time for calling LIM 0 is to be 1 ms.

p20000[8] is set to 4 (= 4 x r20002 = 4 x 250 µs = 1 ms)

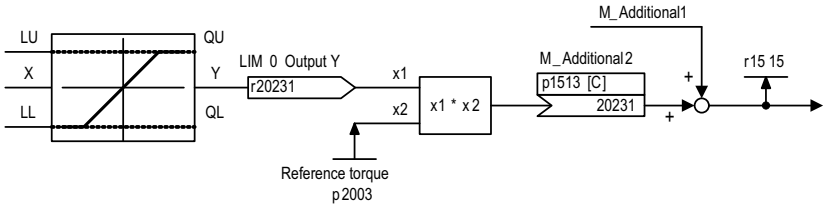

Figure 7-69 Example 2: Interconnecting the output value

Due to the interconnection of p1513 (additional torque 2) to r20231, the per unit output signal Y of the function block is multiplied internally with the reference torque p2003 and interpreted as additional torque with units.

Assumption:

- Basic sampling time: r20002 = 0.25 ms
- r20231 = 0.3333
- p2003 = 300 Nm reference torque
- p1511[0] = 0 (additional torque 1 = "0")
- p1513[0] = 20231

Result:

- r1515 = 100.0 Nm (for CDS0)

Example 3: Interconnecting the PROFIBUS receive word (WORD)

The PZD receive word 2 (CO: r2050[1], function diagram 2460) is to be interconnected with the free function block ADD 0 (function diagram 7220).

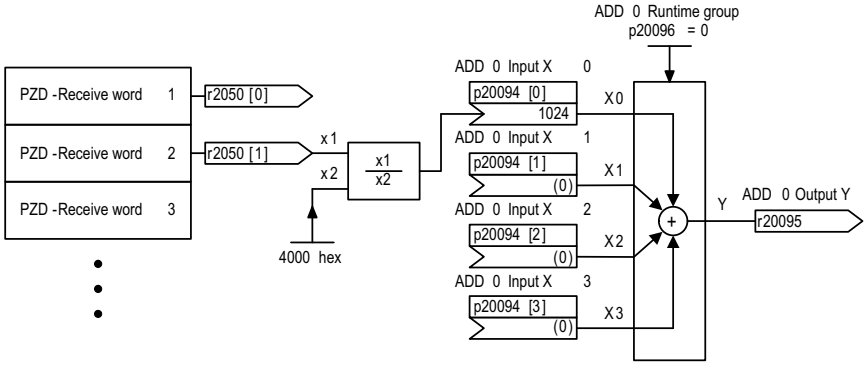

Figure 7-70 Example 3: Interconnecting the PROFIBUS receive word (WORD)

The PROFIBUS process data of data type WORD (16 bits) has the reference variable 4000 hex. At the inputs of the free function blocks, this reference variable is equivalent to 1.0.

Assumption:

- p20096 = 0

  Assign function block ADD 0 to runtime group 0.

- p20000[0] = 1002

  Call runtime group 0 with the sampling time 2 x r20003. The runtime group number zero was chosen at random.

- PROFIBUS receive word 2: r2050[1] = 6000 hex

Result:

- r20095 = (6000 hex/4000 hex) x 1.0 = 1.5

Example 4: Interconnecting the PROFIBUS send word (DWORD)

The output of the free function block LIM 1 (CO: r20234, function diagram 7260) is to be interconnected with a PZD send word (function diagram 2470) of data type DWORD.

The input of the free function block LIM 1 is supplied with a fixed speed setpoint (p1002, function diagram 3010).

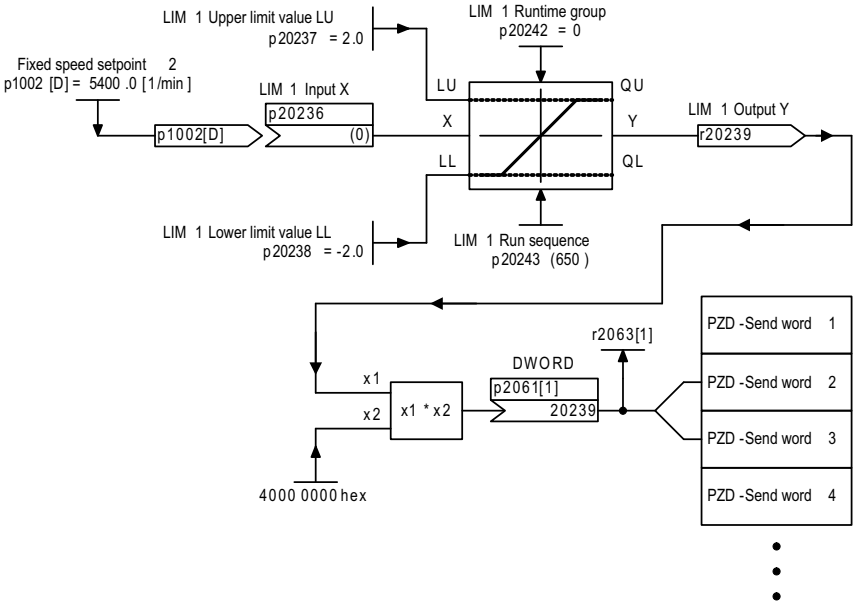

Figure 7-71 Example 4: Interconnecting the PROFIBUS send word (DWORD)

The PROFIBUS process data of data type DWORD (32 bits) has the reference variable 4000 0000 hex. At the outputs of the free function blocks, this reference variable is equivalent to 1.0. Parameter r2063 is only updated when cyclic data exchange actually takes place on PROFIBUS.

Assumption:

- p20000[0] = 1002

  Call runtime group 0 with the sampling time 2 x r20003. The runtime group number zero was chosen at random.
- p1002 = 5400 rpm
- p2000 = 3000 rpm

Result:

- Output value of LIM 1: r20239 = 5400 rpm/3000 rpm = 1.8
- r2063[1] = X1 x X2 = 1.8 x 4000 0000 hex = 7333 3333 hex

7.3.8.2 Commissioning

Activating the "free function blocks" function module

STARTER commissioning software

Activation with the STARTER commissioning software is **only** possible offline and is performed via the "Properties" dialog box for the drive objects. The "free function blocks" can be selected on the "Function modules" tab.

Open the relevant project with STARTER and left-click the plus sign in the project navigator once to open the sub-elements.

Right-click once to display the shortcut menu for the selected drive object. In each case, left-click once to select "Properties" and "Function modules". Scroll to "Free function blocks". Select this function module (set the checkbox) and confirm with "OK". The properties dialog is then closed automatically.

In its factory setting, the "Free function blocks" checkbox is not selected. If you select the checkbox and confirm with "OK", the "free function blocks" function module is activated once the project has been downloaded.

Activating the individual function blocks

Each individual function block is assigned to a runtime group via two parameters:

- The first parameter defines the runtime group.
- The second parameter defines the run sequence within the runtime group.

Within a runtime group, a function block with a lower value for the run sequence is computed before a function block with a higher value.

Note

In the factory setting, each function block is assigned to runtime group 9999. This means that the function block is not computed.

You also have to ensure that runtime group x is called cyclically. This can be done by setting parameter p20000[x] to a value > 0.

Example:

On the "SERVO" drive object type, the basic software sampling time r20003 is 8 ms. Runtime group 0 is to be called every 16 ms.

This means:
Set p20000[0] = 1002 (sampling time 2 x r20003).

Check via r20001[0] = 16.0 ms (sampling time of runtime group 0).

Calculation time load for firmware version 4.1

Processing of free function blocks requires calculation time. If calculation time is becoming short, you will need to check whether all the activated function modules are required and whether all the function blocks used need to be calculated within the same sampling time.

The calculation time load can be reduced by either deactivating function modules or assigning used function blocks to a runtime group with a longer sampling time.

Dependency

The resulting calculation time load depends on the following:

- Number of activated runtime groups (p20000[x] > 0)
- Number of calculated function blocks
- Sampling time

Calculation time online

The calculation time load shown in r9976[0...7] does not include the additional load caused by the free function blocks.

Note

For the basic SINAMICS system as of firmware version 4.1, the following applies:

As of this version, the process of determining the calculation time load is different. For this reason, r9976[0...7] no longer contains the calculation time load generated by the "free function blocks".

Calculation time offline

When the system is in offline mode, SIZER offers an approximate statement regarding whether a configuration can be computed on SINAMICS S110. The additional calculation time load is **not** taken into account when the "free function blocks" function module is activated.

Calculation time load for firmware version 4.3 and higher

For firmware version 4.3 and higher, after a download or a parameter change (e.g. where the sampling time of a runtime group is changed) using the configuration data, the Control Unit (CU) determines the calculation time load to be expected (including the load associated with FBLOCKS). This value is displayed in r9976 (system utilization) for the system as a whole.

If the calculated average calculation time load for the system as a whole r9976[1] or the maximum utilization (including the interruption as a result of time slices with a shorter sampling time) in a sampling time r9976[5] exceeds 100.00%, this generates fault F01054 (CU: System limit exceeded) to be output with fault reaction OFF2.

The utilization is calculated on the Control Unit, i.e. the utilization values are displayed in STARTER/SCOUT in online mode only.

The resulting calculation time load caused by FBLOCKS depends on the following:

- Number of calculated runtime groups
- Sampling time of the runtime groups
- Number of calculated blocks
- Calculated block types

The proportion of the calculation time load associated with FBLOCKS is displayed in r20005[0…9] for runtime groups 0 to 9 (as of firmware version 4.3). Note that the calculation time load for a runtime group k can only be calculated if this has been logged on for cyclic processing (p20000[k-1] ≠ 0).

For firmware version 4.3 and higher, and unlike with version 4.1, if a parameter is changed (in the STARTER online mode) that has an influence on the calculation time load (e.g. changes the sampling time of a runtime group in FBLOCKS), the drive unit immediately recalculates r9976 (and r20005). For parameters which can only be changed in the device states C1 (commissioning device) or C2 (commissioning drive object), i.e. only when STARTER/SCOUT is in the offline mode, r9976 is only updated after the project has been downloaded and the Control Unit has powered up.

For firmware version 4.3, the calculation time load displayed in r9976 can be up to 100.00% without triggering a fault.

Number of possible hardware sampling times

The sampling times for the runtime groups can be selected in p20000[x] as a multiple of r20002 (basic sampling time of hardware time slices), a multiple of r20003 (basic sampling time of software time slices), or on the basis of the sampling time of a basic SINAMICS system function (e.g. when p20000[x] = 9003 == "before setpoint channel" from the sampling time of the setpoint channel).

Only sampling times to which the following applies can be set as hardware sampling times:
1 ms ≤ T_sampling ≤ r20003 - r20002 in p20000[x]

Sampling time r20003 is always a software sampling time regardless of whether it is set as p20000[x] = 1001 (== 1 x r20003) or as a multiple of r20002 (p20000[x] ≤ 256).

Hardware sampling times, number, and assignment

During configuration, note that the number of hardware sampling times (1 ms ≤ time period T_sampling < r20003 - r20002) used by the basic SINAMICS system and "free function blocks" is restricted as follows:

- SINAMICS S110 → no. of hardware sampling times = 11

The assignment of the available hardware sampling times is displayed in r20008[0...12] as follows (STARTER/SCOUT: in online mode only):

- Value = 0.0 → sampling time not assigned
- Value ≠ 0.0 (not equal to 0.0) → sampling time in ms
- Value = 9999900.00000 → sampling time not supported

Note

Note that a long-term trace registers a sampling time of 2 ms and the trace registers sampling times in accordance with the selected trace clock cycle. If these sampling times have not already been registered by the basic SINAMICS system or "free function blocks" (FBLOCKS), these functions require additional free hardware sampling times.

The registered hardware sampling times can be read (if the FBLOCKS are activated) in r20008[0...12]. The current number of free hardware sampling times can be read in r7903.

Hardware sampling times, usage

A sampling time can be used simultaneously by more than one runtime group of "free function blocks" and the basic SINAMICS system.

For this reason, the runtime groups should ideally be registered to existing sampling times or - if it makes more sense due to the function - the fixed runtime group "Calculate before setpoint channel" should be used.

For internal purposes, the drive unit always requires at least two free hardware sampling times, This is why the current number of free hardware sampling times can be read in r7903.

Project download, fault message, and procedure

If too many different hardware sampling times are configured offline, a fault message is not output until the project is downloaded.

In this case, proceed as follows:

1. When the project is in offline mode, switch the free runtime groups assigned hardware sampling times to software sampling times.
   - Hardware sampling times (p20000 < 256)
   - Software sampling times (p20000 ≥ 1001)

     The assignment of fixed runtime groups (p20000 = 9003) does not need to be changed because the fixed runtime group uses the same sampling time as the assigned basic SINAMICS system function.
2. Download the project again.
3. Once the project has been downloaded and the Control Unit has booted, check:
   - r7903: Number of hardware sampling times still available
   - r20008: Number of hardware sampling times already registered by the basic SINAMICS system
4. Adapt the parameterization of the runtime groups accordingly.

Note

The number of different hardware sampling times possible on a Control Unit is restricted. For this reason, preference should be given to software sampling times (multiple of r20003) or, where applicable, the fixed runtime group "Calculate before setpoint channel" (p20000[0...9] = 9003).

7.3.8.3 AND

Brief description

BOOL-type AND function block with four inputs

Mode of operation

This function block links the binary variables at inputs I to a logical AND and outputs the result to its digital output Q.

$$Q = I_0 \wedge I_1 \wedge I_2 \wedge I_3$$

Output Q = 1 when the value 1 is present at every input from I_0 to I_3. In all other cases, output Q = 0.

7.3.8.4 OR

Brief description

BOOL-type OR function block with four inputs

Mode of operation

This function block links the binary variables at inputs I to a logic OR (disjunction) and outputs the result to its digital output Q.

$Q = I_0 \vee I_1 \vee I_2 \vee I_3$

Output Q = 0 when the value 0 is present at every input from I_0 to I_3. In all other cases, output Q = 1.

7.3.8.5 XOR (exclusive OR)

Brief description

BOOL-type XOR function block with four inputs

Mode of operation

This function block links the binary variables at the inputs I according to the exclusive OR logic function and outputs the result to its digital output Q.

Output Q = 0 when the value 0 is present at every input from I0 to I3 or when the value 1 is present at an even number of inputs from I0 to I3.

Output Q = 1 when the value 1 is present at an odd number of inputs from I0 to I3.

7.3.8.6 NOT (inverter)

Brief description

BOOL-type inverter

Mode of operation

This function block inverts the binary variables at input I and outputs the result to output Q.

$Q = \bar{I}$

Output Q = 1 when the value 0 is present at input I.

Output Q = 0 when the value 1 is present at input I.

7.3.8.7 ADD (adder)

Brief description

REAL-type adder with four inputs

Mode of operation

This function block adds (in accordance with the sign) the values entered at inputs X_0 to X_3.

The result is limited to a range of -3.4E38 to +3.4E38 and output at output Y.

$Y = X_0 + X_1 + X_2 + X_3$

7.3.8.8 SUB (subtracter)

Brief description

REAL-type subtracter with two inputs

Mode of operation

This function block subtracts (in accordance with the sign) the value entered at input X_1 from the value entered at input X_0.

The result is limited to a range of -3.4E38 to +3.4E38 and output at output Y.

$Y = X_0 - X_1$

7.3.8.9 MUL (multiplier)

Brief description

REAL-type multiplier with four inputs

Mode of operation

This function block multiplies (in accordance with the sign) the values entered at inputs X_0 to X_3.

The result is limited to a range of -3.4E38 to +3.4E38 and output at output Y.

$Y = X_0 \cdot X_1 \cdot X_2 \cdot X_3$

7.3.8.10 DIV (divider)

Brief description

REAL-type divider with two inputs

Mode of operation

This function block divides the value entered at input X_0 by the value entered at input X_1. The result is output at the outputs as follows:

- Y output: Quotient with places before and after the decimal point
- YIN output: Integer quotient
- MOD output: Division remainder (absolute remainder value, MOD = (Y - YIN) × X0)

The Y output is limited to a range of approx. -3.4E38 to +3.4E38.

$$Y = X_0 / X_1$$

If output value Y exceeds the permissible value range of approx. -3.4E38 to 3.4E38 (because divisor X_1 is very small or zero), the limit value of the output range with the correct sign is output at the Y output. At the same time, digital output QF is set to 1.

With a division of 0/0, block output Y remains unchanged. Digital output QF is set to 1.

7.3.8.11 AVA (absolute value generator with sign evaluation)

Brief description

REAL-type arithmetic function block for generating absolute values

Mode of operation

This function block generates the absolute value of the value present at input X. The result is output at output Y.

$Y = |X|$

If the input variable is negative, digital output SN is set to 1.

7.3.8.12 MFP (pulse generator)

Brief description

- Timer for generating a pulse with a fixed duration
- Used as a pulse-contracting or pulse-stretching monoflop

Mode of operation

The rising edge of a pulse at input I sets output Q to 1 for pulse duration T. The pulse generator cannot be retriggered.

Time flow chart

Output pulse Q as a function of pulse duration T and input pulse I.

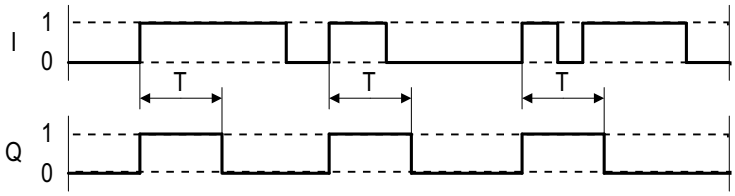

Figure 7-72 MFP (pulse generator): Time flow chart

7.3.8.13 PCL (pulse shortener)

Brief description

Timer for limiting the pulse duration

Mode of operation

The rising edge of a pulse at input I sets output Q to 1.

Output Q becomes 0 when input I is 0 or pulse duration T has expired.

Time flow chart

Output pulse Q as a function of pulse duration T and input pulse I.

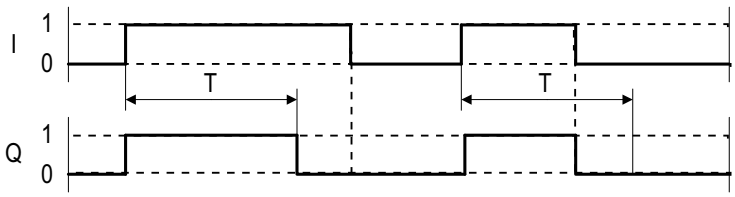

Figure 7-73 PCL (pulse shortener): Time flow chart

7.3.8.14 PDE (ON delay)

Brief description

BOOL-type timer with ON delay

Mode of operation

The rising edge of a pulse at input I sets output Q to 1 after pulse delay time T.

Output Q become 0 when I is 0.

If the duration of input pulse I is less than pulse delay time T, Q remains 0.

If time T is so long that the maximum value that can be displayed internally (T/ta as 32 bit value, where ta = sampling time) is exceeded, the maximum value is set (e.g. when ta = 1 ms, approx. 50 days).

Time flow chart

Output pulse Q as a function of pulse duration T and input pulse I.

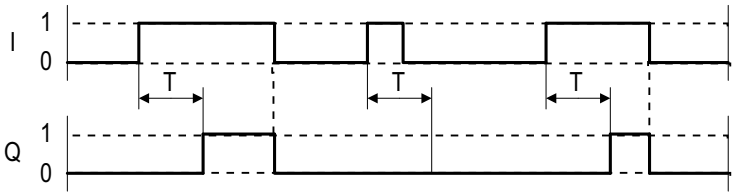

Figure 7-74 PDE (ON delay): Time flow chart

7.3.8.15 PDF (OFF delay)

Brief description

Timer with OFF delay

Mode of operation

The falling edge of a pulse at input I resets output Q to 0 after OFF delay time T.

Output Q becomes 1 when I is 1.

Output Q becomes 0 when input pulse I is 0 and OFF delay time T has expired.

If input I is reset to 1 before time T has expired, output Q remains 1.

Time flow chart

Output pulse Q as a function of pulse duration T and input pulse I.

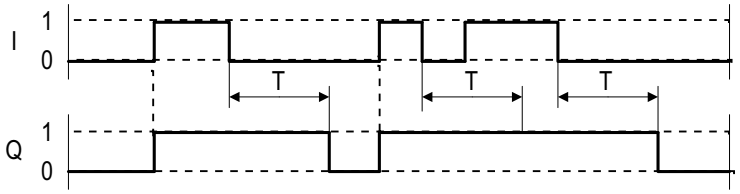

Figure 7-75 PDF (OFF delay): Time flow chart

7.3.8.16 PST (pulse stretcher)

Brief description

Timer for generating a pulse with a minimum duration and an additional reset input

Mode of operation

The rising edge of a pulse at input I sets output Q to 1.

Output Q does not return to 1 until input pulse I is 0 and pulse duration T has expired.

Output Q can be set to zero at any time via reset input R with R = 1.

Time flow chart

Output pulse Q as a function of pulse duration T and input pulse I (when R = 0).

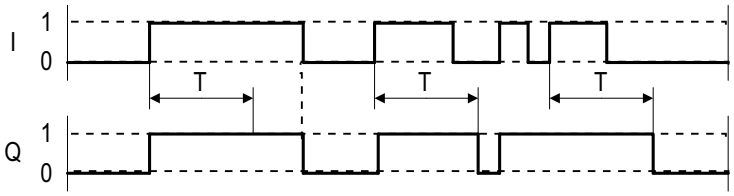

Figure 7-76 PST (pulse stretcher): Time flow chart

7.3.8.17 RSR (RS flip-flop, reset dominant)

Brief description

Reset dominant RS flip-flop for use as a static binary value memory

Mode of operation

With logical 1 at input S, output Q is set to logical 1.

If input R is set to logical 1, output Q is set to logical 0.

If both inputs are logical 0, Q does not change.

If both inputs are logical 1, however, Q is logical 0 because the reset input dominates.

Output QN always has the opposite value to Q.

7.3.8.18 DFR (D flip-flop, reset dominant)

Brief description

BOOL-type function block for use as a D flip-flop with reset dominance

Mode of operation

If inputs S and R are logical 0, the D input data is switched through to output Q when a rising edge is present at trigger input I.

Output QN always has the opposite value to Q. With logical 1 at input S, output Q is set to logical 1.

If input R is set to logical 1, output Q is set to logical 0. If both inputs are logical 0, Q does not change.

If inputs S and R are logical 1, however, Q is logical 0 because the reset input dominates.

Time flow chart

Output pulse Q as a function of the D input and input pulse I for S = R = 0.

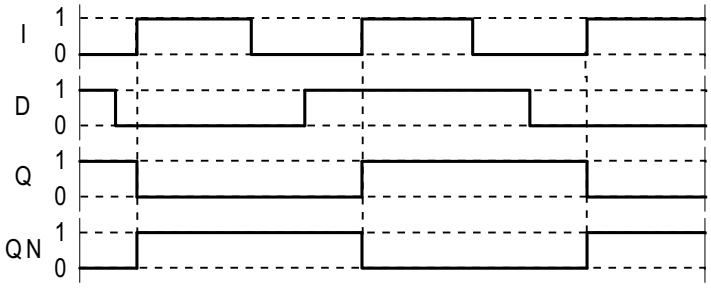

Figure 7-77 DFR (D flip-flop, reset dominant): Time flow chart

7.3.8.19 BSW (binary change-over switch)

Brief description

This function block switches one of two binary input variables (BOOL type) to the output.

Mode of operation

If input I = 0, I0 is switched to output Q.

If input I = 1, I1 is switched to output Q.

7.3.8.20 NSW (numeric change-over switch)

Brief description

This function block switches one of two numeric input variables (REAL type) to the output.

Mode of operation

If input I = 0, X0 is switched to output Y.

If input I = 1, X1 is switched to output Y.

7.3.8.21 LIM (limiter)

Brief description

- Function block for limiting
- Adjustable upper and lower limit
- Indication when set limits are reached

Mode of operation

This function block transfers input variable X to its output Y. The input variable is limited depending on LU and LL.

If the input variable reaches the upper limit LU, output QU is set to 1.

If the input variable reaches the lower limit LL, output QL is set to 1.

If the lower limit is greater than or equal to the upper limit, output Y is set to the upper limit LU.

Algorithm:

$$Y = \begin{cases} LU \text{ for } X \geq LU \\ X \text{ for } LL < X < LU \\ LL \text{ for } X \leq LL \end{cases}$$

Constraint: LL < LU

7.3.8.22 PT1 (smoothing element)

Brief description

- First-order delay element with setting function
- Used as smoothing element

Mode of operation

Setting function not active (S = 0)

Input variable X, dynamically delayed by smoothing time constant T, is switched to output Y.

T determines the steepness of the rise of the output variable. It specifies the time at which the transfer function has risen to 63% of its full-scale value.

When t = 3T, the transfer function reaches approximately 95% of its full-scale value.

The internally fixed proportional gain is 1 and cannot be changed.

If T/TA is sufficiently large (T/TA > 10), the transfer function has the following characteristic:

$Y(t) = X \cdot (1 - e^{-t/T})$

Constraint: $t = n \cdot TA$

The discrete values are calculated according to the following algorithm:

$Y_n = Y_{n-1} + (TA/T)\ (X_n - Y_{n-1})$

Y_n	Value of Y in sampling time n
Y_{n-1}	Value of Y in sampling time n-1
X_n	Value of X in sampling time n

Setting function active (S = 1)

When the setting function is active, the current setting value SVn is accepted at the output variable:

Yn = SVn

Note

The larger T/TA is, the smaller the amplitude change at Y from one sampling time to the next. TA is the configured sampling time of the function block.

T is limited internally: T ≥ TA

7.3.8.23 INT (integrator)

Brief description

- Function block with integrating action
- Integrator functions:
  - Set initial value.
  - Adjustable integral time constant
  - Adjustable limits
  - For normal integrator operation, a positive limit value must be specified for LU and a negative limit value for LL.

Mode of operation

The change in output variable Y is proportional to input variable X and inversely proportional to the integral time constant TI.

Output Y of the integrator can be limited via the inputs LU and LL. If the output reaches one of the two limits, a signal is sent via the outputs QU or QL. If LL ≥ LU, then output Y = LU.

The discrete values (TA is the configured sampling time of the function block) are calculated according to the following algorithm:

$Yn = Yn\text{-}1 + (TA/TI)\,Xn$

Y_n	Value of Y in sampling time n
Y_{n-1}	Value of Y in sampling time n-1
X_n	Value of X in sampling time n

When S = 1, the output variable Y is set to the setting value SV. Two functions can be performed via S:

- Track integrator (Y = SV)

  The digital input is S = 1 and the setting value SV is changed. If applicable, the output makes a jump to the setting value immediately after the setting operation.

- Set integrator to initial value SV.

  S is switched to 1. S is then set to 0, and the integrator starts from SV in the direction specified by the polarity of input variable X.

Note

TI is limited internally: TI = TA

7.3.8.24 DIF (derivative action element)

Brief description

Function block with derivative action behavior

Mode of operation

Output variable Y is proportional to the rate of change of input variable X multiplied by derivative time constant TD.

The discrete values are calculated according to the following algorithm:

$Yn = (Xn – Xn\text{-}1) \cdot TD/TA$

Y_n	Value of Y in sampling time n
X_n	Value of Y in sampling time n-1
X_{n-1}	Value of X in sampling time n

Note

The bigger TD/TA, the bigger the amplitude change on Y from one sampling time to the next. TA is the configured sampling time of the function block.

TD is limited internally to TD ≥ 0.

Caution: Overcontrol possible!

7.3.8.25 LVM (double-sided limit monitor with hysteresis)

Brief description

- This BOOL-type function block monitors an input variable by comparing it with selectable reference variables.
- Application:
  - Monitoring setpoints, actual, and measured values
  - Suppressing frequent switching (jitter)
- This function block provides a window discriminator function.

Mode of operation

This function block uses a transfer characteristic (see transfer characteristic) with hysteresis to calculate an internal intermediate value.

The intermediate value is compared with the interval limits and the result is output at outputs QU, QM, and QL.

The transfer characteristic is configured with the values for the mean value M, the interval limit L, and the hysteresis HY.

Transfer characteristic

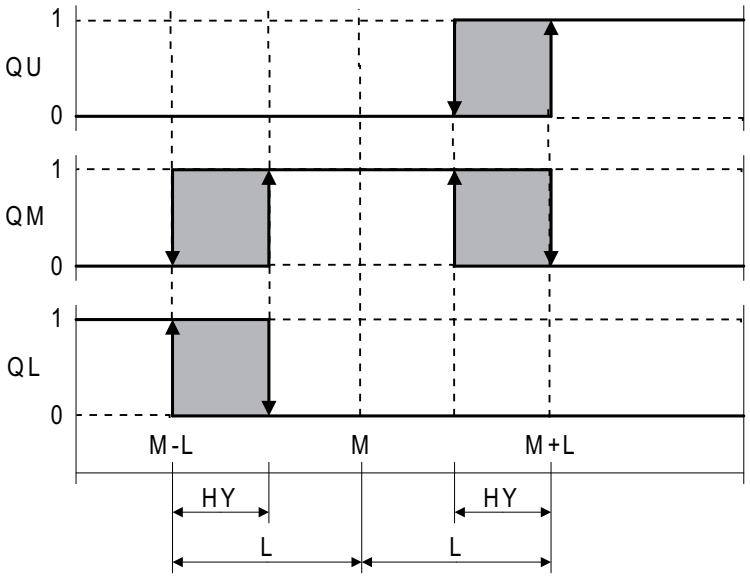

Figure 7-78 LVM (double-sided limit monitor with hysteresis): Transfer characteristic

Safety Integrated Functions 8

8.1 Standards and regulations

8.1.1 General information

8.1.1.1 Aims

Manufacturers and operating companies of equipment, machines, and products are responsible for ensuring the required level of safety. This means that plants, machines, and other equipment must be designed to be as safe as possible in accordance with the current state of the art. To ensure this, companies describe in the various standards the current state of the art covering all aspects relevant to safety. When the relevant Standards are observed, this ensures that state-of-the-art technology has been utilized and, in turn, the erector/builder of a plant or a manufacturer of a machine or a piece of equipment has fulfilled his appropriate responsibility.

Safety systems are designed to minimize potential hazards for both people and the environment by means of suitable technical equipment, without restricting industrial production and the use of machines more than is necessary. The protection of man and environment must be assigned equal importance in all countries, which is it is important that rules and regulations that have been internationally harmonized are applied. This is also designed to avoid distortions in the competition due to different safety requirements in different countries.

There are different concepts and requirements in the various regions and countries of the world when it comes to ensuring the appropriate degree of safety. The legislation and the requirements of how and when proof is to be given and whether there is an adequate level of safety are just as different as the assignment of responsibilities.

The most important thing for manufacturers of machines and companies that set up plants and systems is that the legislation and regulations in the country where the machine or plant is being operated apply. For example, the control system for a machine that is to be used in the US must fulfill local US requirements even if the machine manufacturer (OEM) is based in the European Economic Area (EEA).

8.1.1.2 Functional safety

Safety, from the perspective of the object to be protected, cannot be split-up. The causes of hazards and, in turn, the technical measures to avoid them can vary significantly. This is why a differentiation is made between different types of safety (e.g. by specifying the cause of possible hazards). "Functional safety" is involved if safety depends on the correct function.

To ensure the functional safety of a machine or plant, the safety-related parts of the protection and control devices must function correctly. In addition, the systems must behave in such a way that either the plant remains in a safe state or it is brought into a safe state if a fault occurs. In this case, it is necessary to use specially qualified technology that fulfills the requirements described in the associated Standards. The requirements to achieve functional safety are based on the following basic goals:

- Avoiding systematic faults
- Controlling systematic faults
- Controlling random faults or failures

Benchmarks for establishing whether or not a sufficient level of functional safety has been achieved include the probability of hazardous failures, the fault tolerance, and the quality that is to be ensured by minimizing systematic faults. This is expressed in the Standards using different terms. In IEC/EN 61508, IEC/EN 62061, IEC/EN 61800-5-2 "Safety Integrity Level" (SIL) and EN ISO 13849-1 "Categories" and "Performance Level" (PL).

8.1.2 Safety of machinery in Europe

The EU Directives that apply to the implementation of products are based on Article 95 of the EU contract, which regulates the free exchange of goods. These are based on a new global concept ("new approach", "global approach"):

- EU Directives only specify general safety goals and define basic safety requirements.
- Technical details can be defined by means of standards by Standards Associations that have the appropriate mandate from the commission of the European Parliament and Council (CEN, CENELEC). These standards are harmonized in line with a specific directive and listed in the official journal of the commission of the European Parliament and Council. Legislation does not specify that certain standards have to be observed. When the harmonized Standards are observed, it can be assumed that the safety requirements and specifications of the Directives involved have been fulfilled.
- EU Directives specify that the Member States must mutually recognize domestic regulations.

The EU Directives are equal. This means that if several Directives apply for a specific piece of equipment or device, the requirements of all of the relevant Directives apply (e.g. for a machine with electrical equipment, the Machinery Directive and the Low-Voltage Directive apply).

8.1.2.1 Machinery Directive

The basic safety and health requirements specified in Annex I of the Directive must be fulfilled for the safety of machines.

The protective goals must be implemented responsibly to ensure compliance with the Directive.

Manufacturers of a machine must verify that their machine complies with the basic requirements. This verification is facilitated by means of harmonized standards.

8.1.2.2 Harmonized European Standards

The two Standards Organizations CEN (Comité Européen de Normalisation) and CENELEC (Comité Européen de Normalisation Électrotechnique), mandated by the EU Commission, drew-up harmonized European standards in order to precisely specify the requirements of the EC directives for a specific product. These standards (EN standards) are published in the official journal of the commission of the European Parliament and Council and must be included without revision in domestic standards. They are designed to fulfill basic health and safety requirements as well as the protective goals specified in Annex I of the Machinery Directive.

When the harmonized standards are observed, it is "automatically assumed" that the Directive is fulfilled. As such, manufacturers can assume that they have observed the safety aspects of the Directive under the assumption that these are also covered in this standard. However, not every European Standard is harmonized in this sense. Key here is the listing in the official journal of the commission of the European Parliament and Council.

The European standards regarding the safety of machines are structured in a hierarchical manner as follows:

- A standards (basic standards)
- B standards (group standards)
- C standards (product standards)

Type A standards/basic standards

A standards include basic terminology and definitions relating to all types of machine. This includes EN ISO 12100-1 (previously EN 292-1) "Safety of Machines, Basic Terminology, General Design Principles."

A standards are aimed primarily at the bodies responsible for setting the B and C standards. The measures specified here for minimizing risk, however, may also be useful for manufacturers if no applicable C standards have been defined.

Type B standards/group standards

B standards cover all safety-related standards for various different machine types. B standards are aimed primarily at the bodies responsible for setting C standards. They can also be useful for manufacturers during the machine design and construction phases, however, if no applicable C standards have been defined.

A further sub-division has been made for B standards:

- Type B1 standards for higher-level safety aspects (e.g. ergonomic principles, safety clearances from sources of danger, minimum clearances to prevent parts of the body from being crushed).
- Type B2 standards for protective safety devices are defined for different machine types (e.g. EMERGENCY STOP devices, two-hand operating circuits, interlocking elements, contactless protective devices, safety-related parts of controls).

Type C standards/product standards

C standards are product-specific standards (e.g. for machine tools, woodworking machines, elevators, packaging machines, printing machines etc.). Product standards cover machine-specific requirements. The requirements can, under certain circumstances, deviate from the basic and group standards. Type C/product standards have the highest priority for machine manufacturers who can assume that it fulfills the basic requirements of Annex I of the Machinery Directive (automatic presumption of compliance). If no product standard has been defined for a particular machine, type B standards can be applied when the machine is constructed.

A complete list of the standards specified and the mandated draft standards are available on the Internet at the following address:

http://www.newapproach.org/

Recommendation: Due to the rapid pace of technical development and the associated changes in machine concepts, the standards (and C standards in particular) should be checked to ensure that they are up to date. Please note that the application of a particular standard may not be mandatory provided that all the safety requirements of the applicable EU directives are fulfilled.

8.1.2.3 Standards for implementing safety-related controllers

If the functional safety of a machine depends on various control functions, the controller must be implemented in such a way that the probability of the safety functions failing is sufficiently minimized. EN ISO 13849-1 (formerly EN 954-1) and EN 62061 define principles for implementing safety-related machine controllers which, when properly applied, ensure that all the safety requirements of the EC Machinery Directive are fulfilled. These standards ensure that the relevant safety requirements of the Machinery Directive are fulfilled.

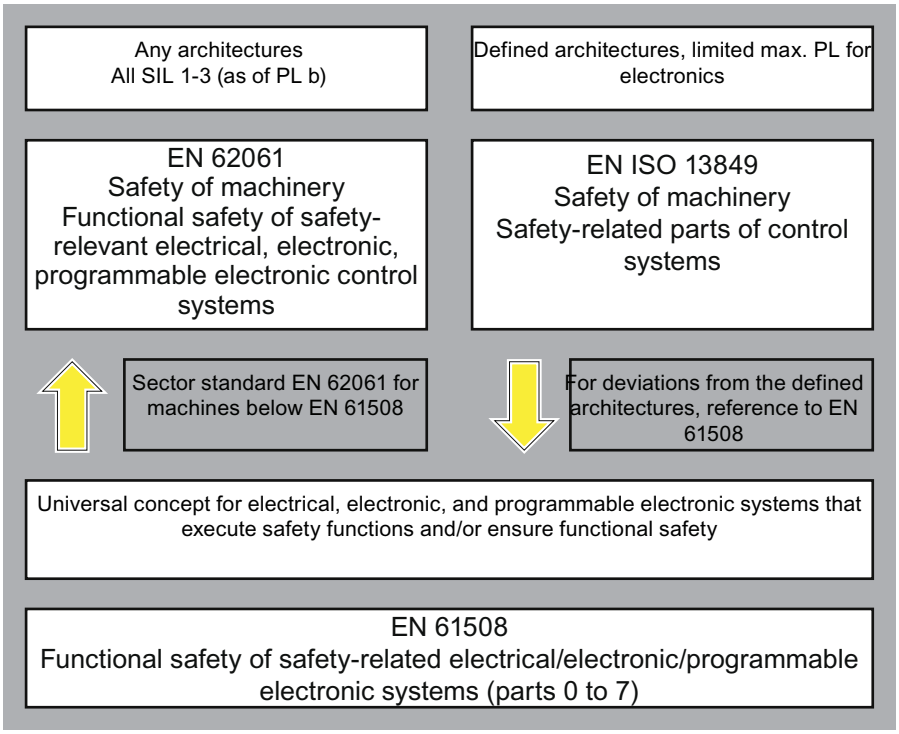

Figure 8-1 Standards for implementing safety-related controllers

The application areas of EN ISO 13849-1, EN 62061, and EN 61508 are very similar. To help users make an appropriate decision, the IEC and ISO associations have specified the application areas of both standards in a joint table in the introduction to the standards.
EN ISO 13849-1 or EN 62061 should be applied depending on the technology (mechanics, hydraulics, pneumatics, electrics, electronics, programmable electronics), risk classification and architecture.

	Systems for executing safety-related control functions	EN ISO 13849-1	EN 62061
A	Non-electrical (e.g. hydraulic, pneumatic)	X	Not covered
B	Electromechanical (e.g. relay and/or basic electronics)	Restricted to the designated architectures (see comment 1) and max. up to PL = e	All architectures and max. up to SIL 3
C	Complex electronics (e.g. programmable electronics)	Restricted to the designated architectures (see comment 1) and max. up to PL = d	All architectures and max. up to SIL 3
D	A standards combined with B standards	Restricted to the designated architectures (see comment 1) and max. up to PL = e	X See comment 3
E	C standards combined with B standards	Restricted to the designated architectures (see comment 1) and max. up to PL = d	All architectures and max. up to SIL 3
F	C standards combined with A standards or C standards combined with A standards and B standards	X See comment 2	X See comment 3
"X" indicates that the point is covered by this standard. Comment 1: Designated architectures are described in Annex B of EN ISO 13849-1 and provide a simplified basis for the quantification. Comment 2: For complex electronics: Using designated architectures in compliance with EN ISO 13849-1 up to PL = d or every architecture in compliance with EN 62061. Comment 3: For non-electrical systems: Use components that comply with EN ISO 13849-1 as sub-systems.			

8.1.2.4 EN ISO 13849-1 (previously EN 954-1)

A qualitative analysis (to EN 954-1) is not sufficient for modern controllers due to their technology. Among other things, EN 954-1 does not take into account time behavior (e.g. test interval and/or cyclic test, lifetime). This results in the probabilistic basis in EN ISO 13849-1 (probability of failure per unit time).

EN ISO 13849-1 is based on the known categories of EN 954-1. It now also takes into account complete safety functions and all the devices required to execute these. With EN ISO 13849-1, safety functions are investigated from a quantitative perspective going beyond the qualitative basis of EN 954-1. Performance levels (PL), which are based on the categories, are used. The following safety-related characteristic quantities are required for devices/equipment:

- Category (structural requirement)
- PL: Performance level
- $MTTF_d$: Mean time to dangerous failure
- DC: Diagnostic coverage
- CCF: Common cause failure

The standard describes how the performance level (PL) is calculated for safety-related components of the controller on the basis of designated architectures. In the event of any deviations from this, EN ISO 13849-1 refers to EN 61508.

When combining several safety-related parts to form a complete system, the Standard explains how to determine the resulting PL.

Note

Since May 2007, EN ISO 13849-1 has been harmonized as part of the Machinery Directive. EN 954-1 will continue to apply until 30.12.2011.

8.1.2.5 EN 62061

EN 62061 (identical to IEC 62061) is a sector-specific standard subordinate to IEC/EN 61508. It describes the implementation of safety-related electrical machine control systems and looks at the complete lifecycle, from the conceptual phase to decommissioning. The standard is based on the quantitative and qualitative analyses of safety functions,

whereby it systematically applies a top-down approach to implementing complex control systems (known as "functional decomposition"). The safety functions derived from the risk analysis are sub-divided into sub-safety functions, which are then assigned to real devices, sub-systems, and sub-system elements. Both the hardware and software are covered. EN 62061 also describes requirements regarding the implementation of application programs.

A safety-related control systems comprises different sub-systems. From a safety perspective, the sub-systems are described in terms of the SIL claim limit and PFH_D characteristic quantities.

Programmable electronic devices (e.g. PLCs or variable-speed drives) must fulfill EN 61508. They can then be integrated in the controller as sub-systems. The following safety-related characteristic quantities must be specified by the manufacturers of these devices.

Safety-related characteristic quantities for subsystems:

- SIL CL: SIL claim limit
- PFH_D:
  Probability of dangerous failures per hour
- T1:
  Lifetime

Simple sub-systems (e.g. sensors and actuators) in electromechanical components can, in turn, comprise sub-system elements (devices) interconnected in different ways with the characteristic quantities required for determining the relevant PFH_D value of the sub-system.

Safety-related characteristic quantities for subsystem elements (devices):

- λ:
  Failure rate
- B10 value: For elements that are subject to wear
- T1:
  Lifetime

For electromechanical devices, a manufacturer specifies a failure rate λ with reference to the number of operating cycles. The failure rate per unit time and the lifetime must be determined using the switching frequency for the particular application.

Parameters for the sub-system, which comprises sub-system elements, that must be defined during the design phase:

- T2:
  Diagnostic test interval
- β:
  Susceptibility to common cause failure
- DC:
  Diagnostic coverage

The PFH_D value of the safety-related controller is determined by adding the individual PFH_D values for subsystems.

The user has the following options when setting up a safety-related controller:

- Use devices and sub-systems that already comply with EN ISO 13849-1, IEC/EN 61508, or IEC/EN 62061. The standard provides information specifying how qualified devices can be integrated when safety functions are implemented.
- Develop own subsystems:
  - Programmable, electronic systems and complex systems: Application of EN 61508 or EN 61800-5-2.
  - Simple devices and subsystems: Application of EN 62061.

EN 62061 does not include information about non-electric systems. The standard provides detailed information on implementing safety-related electrical, electronic, and programmable electronic control systems.
EN ISO 13849-1 must be applied for non-electric systems.

Note

Details of simple sub-systems that have been implemented and integrated are now available as "functional examples".

Note

IEC 62061 has been ratified as EN 62061 in Europe and harmonized as part of the Machinery Directive.

8.1.2.6 Series of standards EN 61508 (VDE 0803)

This series of standards describes the current state of the art.

EN 61508 is not harmonized in line with any EU directives, which means that an automatic presumption of conformity for fulfilling the protective requirements of a directive is not implied. The manufacturer of a safety-related product, however, can also use EN 61508 to fulfill basic requirements of European directives in accordance with the latest conceptual design, for example, in the following cases:

- If no harmonized standard exists for the application in question. In this case, the manufacturer can use EN 61508, although no presumption of conformity exists here.
- A harmonized European standard (e.g. EN 62061, EN ISO 13849, EN 60204-1) references EN 61508. This ensures that the appropriate requirements of the directives are fulfilled ("standard that is also applicable"). When manufacturers apply EN 61508 properly and responsibly in accordance with this reference, they can use the presumption of conformity of the referencing standard.

EN 61508 covers all the aspects that must be taken into account when E/E/PES systems (**e**lectrical, **e**lectronic, and **p**rogrammable **e**lectronic **S**ystem) are used in order to execute safety functions and/or to ensure the appropriate level of functional safety. Other hazards (e.g. electric shock) are, as in EN ISO 13849, not part of the standard.

EN 61508 has recently been declared the "International Basic Safety Publication", which makes it a framework for other, sector-specific standards (e.g. EN 62061). As a result, this standard is now accepted worldwide, particularly in North America and in the automotive industry. Today, many regulatory bodies already stipulate it (e.g. as a basis for NRTL listing).

Another recent development with respect to EN 61508 is its system approach, which extends the technical requirements to include the entire safety installation from the sensor to the actuator, the quantification of the probability of hazardous failure due to random hardware failures, and the creation of documentation covering all phases of the safety-related lifecycle of the E/E/PES.

8.1.2.7 Risk analysis/assessment

Risks are intrinsic in machines due to their design and functionality. For this reason, the Machinery Directive requires that a risk assessment be performed for each machine and, if necessary, the level of risk reduced until the residual risk is less than the tolerable risk. To assess these risks, the following standards must be applied:

- EN ISO 12100-1 "Safety of Machinery - basic terminology, general principles for design"
- EN ISO 13849-1 (successor to EN 954-1) "Safety-related parts of control systems"
- EN ISO 14121-1 (previously EN 1050, Paragraph 5) "Safety of machinery - Risk assessment"

EN ISO 12100-1 focuses on the risks to be analyzed and the design principles for minimizing risk. EN ISO 14121-1 describes the iterative process for assessing and minimizing risk to achieve the required level of safety.

The risk assessment is a procedure that allows hazards resulting from machines to be systematically investigated. Where necessary, the risk assessment is followed by a risk reduction procedure. When the procedure is repeated, this is known as an iterative process. This can help eliminate hazards (as far as this is possible) and can act as a basis for implementing suitable protective measures.

The risk assessment involves the following:

- Risk analysis
  - Determining the limits of the machine (EN ISO 12100-1, EN ISO 14121-1 Paragraph 5)
  - Identifying the hazards (EN ISO 12100-1, EN ISO 14121-1 Paragraph 6)
  - Estimating the level of risk (EN 1050 Paragraph 7)
- Risk assessment (EN ISO 14121-1 Paragraph 8)

As part of the iterative process to achieve the required level of safety, a risk assessment is carried out after the risk estimation. A decision must be made here as to whether the residual risk needs to be reduced. If the risk is to be further reduced, suitable protective measures must be selected and applied. The risk assessment must then be repeated.

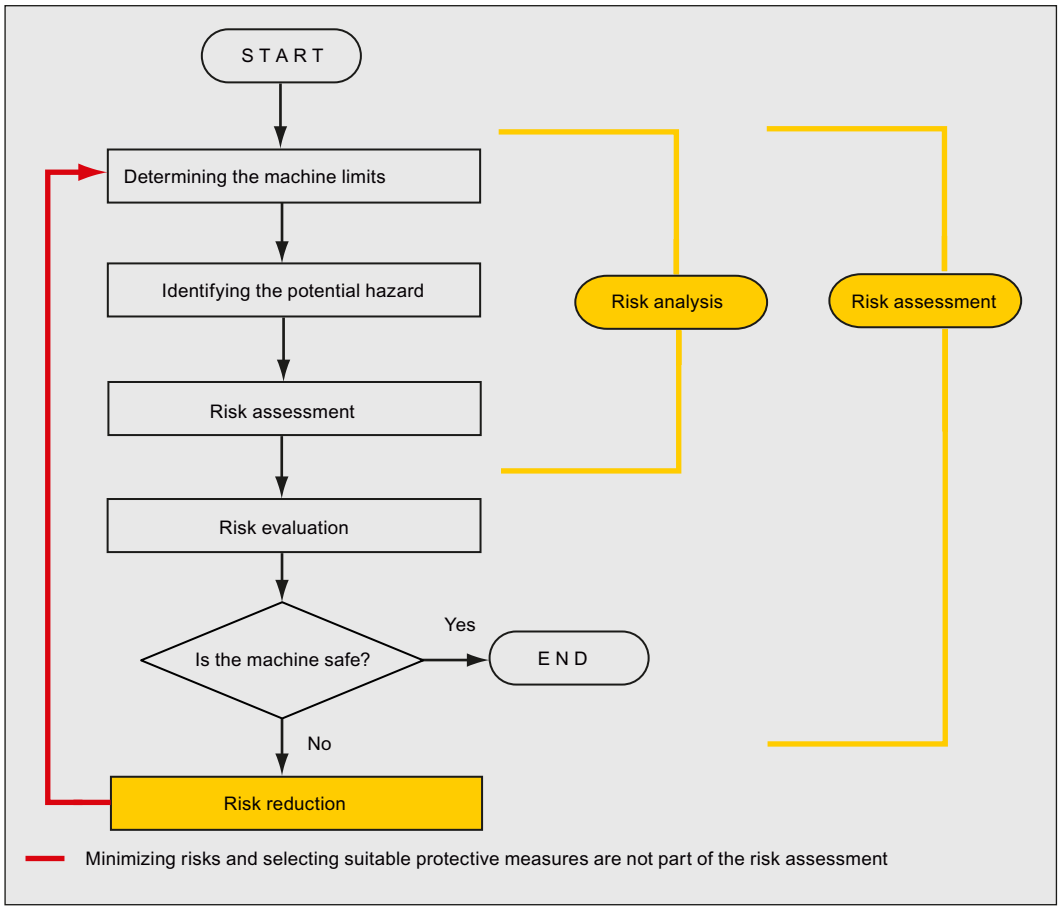

Figure 8-2 Iterative process to achieve the required level of safety to ISO 14121-1

Risks must be reduced by designing and implementing the machine accordingly (e.g. by means of controllers or protective measures suitable for the safety-related functions).

If the protective measures involve the use of interlocking or control functions, these must be designed in accordance with EN ISO 13849-1. For electrical and electronic controls, EN 62061 can be used as an alternative to EN ISO 13849-1. Electronic controls and bus systems must also comply with IEC/EN 61508.

8.1.2.8 Risk reduction

Risk reduction measures for a machine can be implemented by means of safety-related control functions in addition to structural measures. To implement these control functions, special requirements must be taken into account, graded according to the magnitude of the risk. These are described in EN ISO 13849-1 or, in the case of electrical controllers (particularly programmable electronics), in EN 61508 or EN 62061. The requirements regarding safety-related controller components are graded according to the magnitude of the risk and the level to which the risk needs to be reduced.

EN ISO 13849-1 defines a risk graph, which can be used instead of the categories to create hierarchical performance levels (PL).

IEC/EN 62061 uses "Safety Integrity Level" (SIL) for classification purposes. This is a quantified measure of the safety-related performance of a controller. The required SIL is also determined in accordance with the risk assessment principle to ISO 14121 (EN 1050). Annex A of the standard describes a method for determining the required Safety Integrity Level (SIL).

Regardless of which standard is applied, steps must be taken to ensure that all the machine controller components required for executing the safety-related functions fulfill these requirements.

8.1.2.9 Residual risk

In today's technologically advanced world, the concept of safety is relative. In practice, the ability to ensure safety to the extent that risk is permanently excluded – "zero-risk guarantee" – is impossible. The residual risk is the risk that remains once all the relevant protective measures have been implemented in accordance with the latest state of the art.

Machine/plant documentation must always refer to the residual risk (user information to EN ISO 12100-2).

8.1.3 Machine safety in the USA

A key difference between the USA and Europe in the legal requirements regarding safety at work is that, in the USA, no legislation exists regarding machinery safety that is applicable in all of the states and that defines the responsibility of the manufacturer/supplier. A general requirement exists stating that employers must ensure a safe workplace.

8.1.3.1 Minimum requirements of the OSHA

The Occupational Safety and Health Act (OSHA) from 1970 regulates the requirement that employers must offer a safe place of work. The core requirements of OSHA are specified in Section 5 "Duties".

The requirements of the OSH Act are managed by the "Occupational Safety and Health Administration" (also known as OSHA). OSHA employs regional inspectors who check whether or not workplaces comply with the applicable regulations.

The OSHA regulations are described in OSHA 29 CFR 1910.xxx ("OSHA Regulations (29 CFR) PART 1910 Occupational Safety and Health"). (CFR: Code of Federal Regulations.)

http://www.osha.gov

The application of standards is regulated in 29 CFR 1910.5 "Applicability of standards". The concept is similar to that used in Europe. Product-specific standards have priority over general standards insofar as they cover the relevant aspects. Once the standards are fulfilled, employers can assume that they have fulfilled the core requirements of the OSH Act with respect to the aspects covered by the standards.

In conjunction with certain applications, OSHA requires that all electrical equipment and devices that are used to protect workers be authorized by an OSHA-certified, "Nationally Recognized Testing Laboratory" (NRTL) for the specific application.

In addition to the OSHA regulations, the current standards defined by organizations such as NFPA and ANSI must be carefully observed and the extensive product liability legislation that exists in the US taken into account. Due to the product liability legislation, it is in the interests of manufacturing and operating companies that they carefully maintain the applicable regulations and are "forced" to fulfill the requirement to use state-of-the-art technology.

Third-party insurance companies generally demand that their customers fulfill the applicable standards of the standards organizations. Self-insured companies are not initially subject to this requirement but, in the event of an accident, they must provide verification that they have applied generally-recognized safety principles.

8.1.3.2 NRTL listing

To protect employees, all electrical equipment used in the USA must be certified for the planned application by a "Nationally Recognized Testing Laboratory" (NRTL) certified by the OSHA. NRTLs are authorized to certify equipment and material by means of listing, labeling, or similar. Domestic standards (e.g. NFPA 79) and international standards (e.g. IEC/EN 61508 for E/E/PES systems) are the basis for testing.

8.1.3.3 NFPA 79

Standard NFPA 79 (Electrical Standard for Industrial Machinery) applies to electrical equipment on industrial machines with rated voltages of less than 600 V. A group of machines that operate together in a coordinated fashion is also considered to be one machine.

For programmable electronics and communication buses, NFPA 79 states as a basic requirement that these must be listed if they are to be used to implement and execute safety-related functions. If this requirement is fulfilled, then electronic controls and communication buses can also be used for Emergency Stop functions, Stop Categories 0 and 1 (refer to NFPA 79 9.2.5.4.1.4). Like EN 60204-1, NFPA 79 no longer specifies that the electrical energy must be disconnected by electromechanical means for emergency stop functions.

The core requirements regarding programmable electronics and communication buses are: system requirements (see NFPA 79 9.4.3)

1. Control systems that contain software-based controllers must:
   - In the event of a single fault
     (a) cause the system to switch to a safe shutdown mode
     (b) prevent the system from restarting until the fault has been rectified
     (c) prevent an unexpected restart
   - Offer the same level of protection as hard-wired controllers
   - Be implemented in accordance with a recognized standard that defines the requirements for such systems.
2. IEC 61508, IEC 62061, ISO 13849-1, ISO 13849-2 and IEC 61800-5-2 are specified as suitable standards in a note.

Underwriter Laboratories Inc. (UL) has defined a special category for "Programmable Safety Controllers" for implementing this requirement (code NRGF). This category covers control devices that contain software and are designed for use in safety-related functions.

A precise description of the category and a list of devices that fulfill this requirement can be found on the Internet at the following address:

http://www.ul.com → certifications directory → UL Category code/ Guide information → search for category "NRGF"

TUV Rheinland of North America, Inc. is also an NRTL for these applications.

8.1.3.4 ANSI B11

ANSI B11 standards are joint standards developed by associations such as the Association for Manufacturing Technology (AMT) and the Robotic Industries Association (RIA).

The hazards of a machine are evaluated by means of a risk analysis/assessment. The risk analysis is an important requirement in accordance with NFPA 79, ANSI/RIA 15.06, ANSI B11.TR-3 and SEMI S10 (semiconductors). The documented findings of a risk analysis can be used to select a suitable safety system based on the safety class of the application in question.

8.1.4 Machine safety in Japan

The situation in Japan is different from that in Europe and the US. Legislation such as that prescribed in Europe does not exist. Similarly, product liability does not play such an important role as it does in the US.

Instead of legal requirements to apply standards have been defined, an administrative recommendation to apply JIS (Japanese Industrial Standard) is in place: Japan bases its approach on the European concept and uses basic standards as national standards (see table).

Table 8- 1 Japanese standards

ISO/IEC number	JIS number	Comment
ISO12100-1	JIS B 9700-1	Earlier designation TR B 0008
ISO12100-2	JIS B 9700-2	Earlier designation TR B 0009
ISO14121- 1 / EN1050	JIS B 9702	
ISO13849-1	JIS B 9705-1	
ISO13849-2	JIS B 9705-1	
IEC 60204-1	JIS B 9960-1	Without annex F or route map of the European foreword
IEC 61508-0 to -7	JIS C 0508	
IEC 62061		JIS number not yet assigned

8.1.5 Equipment regulations

In addition to the requirements of the guidelines and standards, company-specific requirements must be taken into account. Large corporations in particular (e.g. automobile manufacturers) make stringent demands regarding automation components, which are often listed in their own equipment specifications.

Safety-related issues (e.g. operating modes, operator actions with access to hazardous areas, EMERGENCY STOP concepts, etc.) should be clarified with customers early on so that they can be integrated in the risk assessment/risk reduction process.

8.1.6 Other safety-related issues

8.1.6.1 Information sheets issued by the Employer's Liability Insurance Association

Safety-related measures to be implemented cannot always be derived from directives, standards, or regulations. In this case, supplementary information and explanations are required.

Some regulatory bodies issue publications on an extremely wide range of subjects.

Information sheets covering the following areas are available, for example:

- Process monitoring in production environments
- Axes subject to gravitational force
- Roller pressing machines
- Lathes and turning centers - purchasing/selling

These information sheets issued by specialist committees can be obtained by all interested parties (e.g. to provide support in factories, or when regulations or safety-related measures for plants and machines are defined). These information sheets provide support for the fields of machinery construction, production systems, and steel construction.

You can download the information sheets from the following Internet address (website is in German, although some of the sheets are available in English):

http://www.bg-metall.de/

Click the "Downloads" quick link and select the category "Informationblätter der Fachausschüsse".

8.1.6.2 Additional references

- Safety Integrated: The Safety System for Industry (5th Edition and supplement), order no. 6ZB5 000-0AA01-0BA1
- Safety Integrated - Terms and Standards - Machine Safety Terminology (Edition 04/2007), order no. E86060-T1813-A101-A1

8.2 General information about SINAMICS Safety Integrated

8.2.1 Supported functions

This chapter covers all the Safety Integrated functions available for SINAMICS S110. A distinction is made between Safety Integrated Basic Functions and Safety Integrated Extended Functions.

The safety functions listed here conform to:

- Safety Integrity Level (SIL) 2 according to DIN EN 61508
- Category 3 to DIN EN ISO 13849-1
- Performance Level (PL) d according to DIN EN ISO 13849-1

The safety functions match the functions according to DIN EN 61800-5-2.

The following Safety Integrated (SI) functions are available:

- **Safety Integrated Basic Functions**

  These functions are part of the standard scope of the drive and can be used without requiring an additional license. These functions are always available. These functions do not place any special requirements on the encoder used.

  – Safe Torque Off (STO)

    STO is a safety function that prevents the drive from restarting unexpectedly, in accordance with EN 60204-1, Section 5.4.

  – Safe Stop 1 (SS1, time controlled)

    Safe Stop 1 is based on the "Safe Torque Off" function. This means that a Category 1 stop in accordance with EN 60204-1 can be implemented.

  – Safe Brake Control (SBC)

    The SBC function permits the safe control of a holding brake.

    A Safe Brake Relay is needed in addition for these functions.

- **Safety Integrated Extended Functions**

  These functions require an additional Safety license. Extended Functions with encoder require an encoder with Safety capability (see section "Reliable actual value acquisition with the encoder system").

  – Safe Torque Off (STO)

    STO is a safety function that prevents the drive from restarting unexpectedly, in accordance with EN 60204-1, Section 5.4.

  – Safe Stop 1 (SS1, time and acceleration controlled)

    The SS1 function is based on the “Safe Torque Off” function. This means that a Category 1 stop in accordance with EN 60204-1 can be implemented.

  – Safe Stop 2 (SS2)

    The SS2 function brakes the motor safely with a subsequent transition to "Safe Operating Stop" (SOS). This means that a Category 2 stop in accordance with EN 60204-1 can be implemented.

  – Safe Operating Stop (SOS)

    "Safe Operating Stop" (SOS) protects against unintentional movements. The drive is in closed-loop control mode and is not disconnected from the power supply.

  – Safely Limited Speed (SLS)

    The SLS function ensures that the drive does not exceed a preset speed limit.

  – Safe Speed Monitor (SSM)

    The SSM function is used for safely identifying when a speed limit is undershot in both directions of rotation, e.g. to identify zero speed. A fail-safe output signal is available for further processing.

  – Safe Acceleration Monitor (SAM)

    The SAM function monitors the safe braking of the drive during the ramp down. An unintentional "reacceleration" is reliably prevented. It is part of functions SS1 and SS2.

  – Safe Brake Ramp (SBR)

    The Safe Brake Ramp function provides a reliable method for monitoring the brake ramp. It is part of the "SS1 without encoder" and "SLS without encoder" functions.

  – Safe Direction (SDI)

    The Safe Direction function provides a reliable method for monitoring the direction of motion.

The term "Motion Monitoring Functions" is also used for the Safety Integrated Extended Functions.

Prerequisites for the Extended Functions

- Safety Integrated Extended Functions can only be operated with the relevant license. The associated license key is entered in parameter p9920 in ASCII code. The license key can be activated via parameter p9921 = 1. Alternatively, you can enter the license key via the STARTER button "License Key".

  For information on how to generate the license key for the product "SINAMICS Safety Integrated Extended Functions", read the section "Licensing". An insufficient license is indicated via the following alarm and LED:

  – A13000 → License not sufficient

  – LED RDY → Flashes greed/red at 0.5 Hz

- Activation via PROFIsafe or safe on-board terminals
- An activated speed controller in the drive
- Overview of hardware components that support the Extended Functions:

  – CU305 Control Unit

  – Power Modules blocksize PM340

  – Sensor Modules SMC20, SME20/25

  – Motors with DRIVE-CLiQ interface (not with resolver encoder)

  – Safe Brake Relay (SBR)

8.2.2 Control of Safety Integrated functions

Safety Integrated functions can be controlled via on-board terminals or via a PROFIsafe telegram using PROFIBUS. The Extended Functions can be controlled via on-board terminals or PROFIsafe, control of the Basic Functions can be selected via on-board terminals (F-DI 0) or PROFIsafe **and** on-board terminals (F-DI 0).

NOTICE
PROFIsafe or terminals With a Control Unit, control of the Extended Functions is only possible using PROFIsafe or on-board terminals. Mixed operation is not permissible.

8.2.3 Drive monitoring with or without encoder

If motors without an encoder are being used, not all Safety Integrated functions can be used. In operation without encoder the speed actual values are calculated from the measured electrical actual values.
As a consequence, speed monitoring down to a speed of 0 rpm is also possible for operation without an encoder.

Table 8- 2 Overview of Safety Integrated functions

	Functions	Abbreviation	With encoder	Without encoder	Brief description
Basic Functions	Safe Torque Off	STO	Yes	Yes	Safe torque off
	Safe Stop 1	SS1	Yes	Yes	Safe stopping process in accordance with stop category 1
	Safe Brake Control	SBC	Yes	Yes	Safe brake control
Extended Functions	Safe Torque Off	STO	Yes	Yes	Safe torque off
	Safe Stop 1	SS1	Yes	Yes	Safe stop in accordance with stop category 1
	Safe Brake Control	SBC	Yes	Yes	Safe brake control
	Safe Stop 2	SS2	Yes	No	Safe stop in accordance with stop category 2
	Safe Operating Stop	SOS	Yes	No	Safe monitoring of the standstill position
	Safely Limited Speed	SLS	Yes	Yes	Safe monitoring of the maximum speed
	Safe Speed Monitor	SSM	Yes	No	Safe monitoring of the minimum speed
	Safe Acceleration Monitor	SAM	Yes	No	Safe monitoring of drive acceleration
	Safe Brake Ramp	SBR	No	Yes	Safe brake ramp
	Safe Direction	SDI	Yes	Yes	Safe monitoring of the direction of motion

The configuration of the Safety Integrated functions and the selection of monitoring with or without encoder takes place in the Safety screens of the STARTER or SCOUT tools.

Monitoring with an encoder

The Safety Integrated functions with encoder are configured using p9506 = p9306 = 0 in the expert list (factory setting) or by selecting "with encoder" in the Safety screen form.

The Safe Acceleration Monitor (SAM) recognizes if the drive accelerates beyond the tolerance defined in p9348/p9548 during the ramp down phase, and generates a STOP A. The monitoring function is activated for SS1 (or STOP B) and SS2 (or STOP C) and is deactivated after the speed drops below the value set in p9368/p9568.

You can find more detailed information on the Safe Acceleration Monitor later on in this manual.

Monitoring without an encoder

The encoderless Safety Integrated functions are configured in the expert list using p9506 = p9306 = 1 or p9506 = p9306 = 3 or by selecting "without encoder" in the Safety screen form.

For speed monitoring without encoder, the drive is braked along a ramp, which is set using Safe Brake Ramp (SBR encoderless). The gradient of the brake ramp is defined using a reference speed (p9581/p9381) and a monitoring time (p9583/p9383). In addition, a delay time (p9582/p9382) can be set. The brake ramp is effectively monitored once this delay time expires.

If a Safety Integrated function is activated, e.g. SS1, then the system monitors whether the actual value of the speed remains below the brake ramp during the complete braking operation.

For p9506/p9306 = 3, the Safety functions without encoder correspond to the functions with encoder, and SAM responds just the same as for "monitoring with encoder".

8.2.4 Parameter, Checksum, Version, Password

Properties of Safety Integrated parameters

The following applies to Safety Integrated parameters:

- The Safety parameters are kept separate for each monitoring channel.
- During startup, checksum calculations (Cyclic Redundancy Check, CRC) are performed on the Safety parameter data and checked. The display parameters are not contained in the CRC.
- Data storage: The parameters will be saved in the non-volatile memory.
- Factory settings for Safety parameters

  A reset of the Safety parameters to the factory setting on a drive-specific basis using p0970 or p3900 and p0010 = 30 is only possible when the safety functions are not enabled (p9301 = p9501 = p9601 = p9801 = 0).

  A complete reset of all parameters to the factory settings (p0976 = 1 and p0009 = 30 on the Control Unit) is possible even when the safety functions are enabled (p9301 = p9501 = p9601 = p9801 ≠ 0).
- The Safety parameterization is password-protected against accidental or unauthorized changes.

NOTICE
The following Safety parameters are not protected by the Safety password: • p9370 SI Motion acceptance test mode (CPU 2) • p9570 SI Motion acceptance test mode (CPU 1) • p9533 SI Motion SLS Setpoint speed limitation • p9783 SI Motion Synchronous motor current without encoder

Checking the checksum

For each monitoring channel, the Safety parameters include one parameter for the actual checksum for the Safety parameters that have undergone a checksum check.

During commissioning, the actual checksum must be transferred to the corresponding parameter for the reference checksum. This can be done for all checksums of a drive object at the same time with parameter p9701.

Basic Functions

- r9798 SI actual checksum SI parameters (CPU 1)
- r9799 SI reference checksum SI parameters (CPU 1)
- r9898 SI actual checksum SI parameters (CPU 2)
- p9899 SI reference checksum SI parameters (CPU 2)

Extended Functions

- r9398[0...1] SI Motion actual checksum SI parameters (CPU 2)
- p9399[0...1] SI Motion reference checksum SI parameters (CPU 2)
- r9728[0...1] SI Motion actual checksum SI parameters
- p9729[0...1] SI Motion reference checksum SI parameters

During each ramp-up procedure, the actual checksum is calculated via the Safety parameters and then compared with the reference checksum.

If the actual and reference checksums are different, fault F01650/F30650 or F01680/F30680 is output.

Safety Integrated versions

The Safety firmware on the Control Unit has a different version ID to that on the Sensor Module.

For the Basic Functions:

- r9770 SI version, drive-autonomous safety functions (CPU 1)

For the Extended Functions:

- r9590 SI Motion version safe motion monitoring (CPU 1)
- r9890 SI version (Sensor Module)

Note

For detailed requirements regarding Safety Integrated firmware, see "Safety Integrated firmware versions".

Password

The Safety password protects the Safety parameters against unintentional or unauthorized access.

In commissioning mode for Safety Integrated (p0010 = 95), you cannot change Safety parameters until you have entered the valid Safety password in p9761 for the drive.

- When Safety Integrated is commissioned for the first time, the following applies:
  - Default of p9761 = 0 (SI password entry drive)

  In other words:
  The Safety password does not need to be set during first commissioning.
- In the case of a series commissioning of Safety or in the case of spare part installation, the following applies:
  - The Safety password is retained on the memory card and in the STARTER project.
  - No Safety password is required in the case of spare part installation.
- Change password for the drive
  - p0010 = 95 Commissioning mode
  - p9761 = Enter "old Safety password".
  - p9762 = Enter "new password".
  - p9763 = Confirm "new password".
  - The new and confirmed Safety password is valid immediately.

    Alternatively, you can change the Safety password using the STARTER screen.

If you need to change Safety parameters but you do not know the Safety password, proceed as follows:

1. Resetting the drive unit to factory settings.
2. Recommission the drive unit and drive.
3. Recommission Safety Integrated.

Or contact your regional Siemens office and ask for a readout of the password (complete drive project must be made available).

Overview of important parameters (see SINAMICS S110 List Manual)

- p9761 SI password input
- p9762 SI password new
- p9763 SI password acknowledgment

8.3 System features

8.3.1 Latest information

Important note for maintaining the operational safety of your system:

⚠WARNING

Systems with safety-related characteristics are subject to special operational safety requirements on the part of the operating company. The supplier is also obliged to comply with special product monitoring measures. For this reason, we publish a special newsletter containing information on product developments and features that are (or could be) relevant when operating safety-related systems. You should subscribe to the corresponding newsletter in order to obtain the latest information and to allow you to modify your equipment accordingly.

Go into the Internet under:

http://automation.siemens.com

To subscribe to the newsletter, please proceed as follows:

1. Select the desired language for the webpage.
2. Click on the menu item "Support".
3. Click on the menu item "Newsletter".

Note

You have to register and log in if you want to subscribe to any newsletters. You will be led automatically through the registration process.

4. Click on "Login" and log in with your access data. If you do not yet have a login and password, select "Yes, I would like to register now".

   You can subscribe to the individual newsletters in the following window.
5. Select the document type you wish to be informed about under "Select document type for topic and product newsletters".
6. Under the "Product Support" heading on this page, you can see which newsletter is currently available.

7. Open the subject area "Safety Engineering - Safety Integrated".

   You will now be shown which newsletter is available for this particular subject area or topic. You can subscribe to the appropriate newsletter by clicking on the box. If you require more detailed information on the newsletters then please click on these. A small supplementary window is opened from where you can take the appropriate information.

8. At the very least, register for the newsletters for the following product areas:
   - Safety Integrated for SIMOTION
   - Drives

8.3.2 Certification

The safety functions of the SINAMICS S drive system meet the following requirements:

- Category 3 according to ISO 13849-1
- Performance level (PL) d according to EN ISO 13849-1
- Safety integrity level 2 (SIL 2) to IEC 61508
- EN 954-1
- EN 61800-5-2
- Systematic capability according to EN 62061

In addition, most of the safety functions of the SINAMICS S have been certified by independent institutes. An up-to-date list of certified components is available on request from your local Siemens office.

8.3.3 Safety instructions

Note

Additional safety information and residual risks not specified in this section are included in the relevant sections of this Function Manual.

⚠ DANGER

Safety Integrated can be used to minimize the level of risk associated with machines and plants.
Machines and plants can only be operated safely in conjunction with Safety Integrated, however, when the machine manufacturer

- is familiar with and observes every aspect of this technical user documentation, including the documented general conditions, safety information, and residual risks.
- Carefully constructs and configures the machine/plant. A careful and thorough acceptance test must then be performed by qualified personnel and the results documented.
- Implements and validates all the measures required in accordance with the machine/plant risk analysis by means of the programmed and configured Safety Integrated functions or by other means.

It should be noted that Safety Integrated does not replace the machine/plant risk assessment carried out by the machine manufacturer as required by the EG Machinery Directive.
In addition to Safety Integrated, further risk reduction measures must be implemented.

⚠ WARNING

The Safety Integrated functions cannot be activated until the startup is completed. System startup is a critical operating state with increased risk. No personnel may be present in the immediate danger zone in this phase.

The drives of vertical axes must be in torque state.

A complete forced dormant error detection cycle is required after power on (see chapter "Forced dormant error detection").

⚠WARNING

EN 60204-1
The Emergency Stop function must bring the machine to a standstill in accordance with stop category 0 or 1 (STO or SS1).
The machine must not restart automatically after EMERGENCY STOP.
When the safety functions (Extended functions) are deactivated, an automatic restart is permitted under certain circumstances depending on the risk analysis (except when EMERGENCY STOP is reset). An automatic start is permitted when a protective door is closed, for example.

⚠WARNING

After hardware and/or software components have been modified or replaced, all protective equipment must be closed prior to system startup and drive activation. Personnel shall not be present within the danger zone.

It may be necessary to carry out a partial or complete acceptance test or a simplified functional test (see the "Acceptance test" chapter) after making certain changes or replacements.

Before allowing anybody to re-enter the danger zone, you should test steady control response by briefly moving the drives in forward and reverse direction (+/–).

To observe during power on:

The safety functions can only be activated once system has booted up.

⚠WARNING

- Encoder faults within a single-encoder system are detected by means of various HW and SW monitoring functions. It is not allowed to disable these monitoring functions and they must be parameterized carefully. Depending on the fault type and responding monitoring function, stop function category 0 or 1 in accordance with EN 60204-1 (fault response functions STOP A or STOP B in accordance with Safety Integrated) is selected.
- The category 0 stop function to EN 60204-1 (STO or STOP A to Safety Integrated) means that the drives are not decelerated but instead coast to standstill (the time required to coast to standstill depends on the kinetic energy). This must be included in the logic of the protective door lock, for example, by means of logic operation of "SSM with encoder (n<nx)". For Safety without encoder, you need to use other measures to ensure that the protective door remains locked until the drive has come to a standstill.
- Safety Integrated is not capable of detecting parameterization errors made by the machine manufacturer. The required safety level can only be reached by by means of an elaborate acceptance test.
- Power Modules or the motor must be replaced with a device of the same type, as the parameter settings will otherwise lead to an incorrect Safety Integrated response. The corresponding drive must be re-commissioned after an encoder was replaced.

⚠WARNING

If an internal or external fault occurs, none or only some of the parameterized safety functions are available during the STOP-F response triggered by the fault. This must be taken into account when a delay time between STOP F and STOP B is parameterized. This applies in particular to vertical axes.

NOTICE

Changing the EDS with safe motion monitoring

An encoder which is used for Safety functions must not be switched over when a data set is switched over.

The Safety functions check the safety-relevant encoder data for changes when data sets are switched over. If a change is detected, fault F01670 is displayed with a fault value of 10, which results in a non-acknowledgeable STOP A. The safety-relevant encoder data in the various data sets must therefore be identical.

8.3.4 Probability of failure for safety functions

Probability of failure

The probabilities of safety function failure must be specified in the form of a PHF value (Probability of Failure per Hour) to IEC 61508, IEC 62061 and ISO 13849-1. The PFH value of a safety function depends on the safety concept of the drive unit and its hardware configuration, as well as on the PFH values of other components used for this safety function.

Corresponding PFH values are provided for the SINAMICS S110 drive unit, depending on the hardware configuration (control type, ...). The various integrated safety functions are not differentiated.

The PHF values can be requested from your local sales office.

8.3.5 Response times

Controlling the Basic Functions

Control of the Basic Functions via terminals

The table below shows the control response times via terminals.

Table 8- 3 Response times when controlling the Basic Functions via terminals

Function	Typical[1)]	Worst case[1)]
STO	2 x r9780 + t_E	7 x r9780 + t_E
SBC	4 x r9780 + t_E	11 x r9780 + t_E
SS1 (time controlled) Selection up until STO is initiated	2 x r9780 + p9652 + t_E	7 x r9780 + p9652 + t_E
SS1 (time controlled) Selection up until SBC is initiated	4 x r9780 + p9652 + t_E	11 x r9780 + p9652 + t_E

For t_E (debounce time of the digital input F-DI 0):

p9651 = 0 t_E = p0799 (default = 4 ms)
p9651 ≠ 0 t_E = p9651 + 1 ms

Control of Basic Functions via PROFIsafe

The following table lists the response times from receiving the PROFIsafe telegram at the Control Unit up to initiating the particular response.

Table 8- 4 Response times when controlling the Basic Functions via PROFIsafe

Function	Typical	Worst case
STO	5 x r9780	5 x r9780
SBC	6 x r9780	13 x r9780
SS1 (time controlled) Selection up until STO is initiated	5 x r9780 + p9652	5 x r9780 + p9652
SS1 (time controlled) Selection up until SBC is initiated	6 x r9780 + p9652	13 x r9780 + p9652

Controlling the Extended Functions

The tables below show the response times, when functions STO, SS1, or SS2 are selected, between recognition of the selection at the Control Unit and the initiation of the relevant braking response. The entries for monitoring functions SOS, SLS, SAM, and SSM show the time between when the relevant limit value is exceeded and when the response is initiated.

Control of Extended Functions with encoder via PROFIsafe

The following table lists the response times from receiving the PROFIsafe telegram at the Control Unit up to initiating the particular response.

Table 8- 5 Reaction times when controlling the Extended Functions with encoder via PROFIsafe

Function	Typical	Worst case
STO	4 x p9500 + r9780	4 x p9500 + 3 x r9780
SBC	4 x p9500 + 2 x r9780	4 x p9500 + 9 x r9780
SS1 (time and acceleration controlled), SS2 selection until braking initiated	4 x p9500 + 2 ms	5 x p9500 + 2 ms
SAM response of the safe acceleration monitoring	2 x p9500 + 2 ms	2.5 x p9500 + r9780 + p9511
SOS standstill tolerance window violated	1.5 x p9500 + 2 ms	3 x p9500 + p9511+ 2 ms
SLS speed limit violated [2)]	2 x p9500 + 2 ms	3.5 x p9500 + p9511+ 2 ms
SSM [3)]	4 x p9500	4.5 x p9500 + p9511

The specified response times involve internal SINAMICS response times. Program run times in the F host and the transmission time via PROFIBUS or PROFINET are not taken into account.

Control of Extended Functions with encoder via terminals

The table below shows the response times after the appearance of a signal at the terminals.

Table 8- 6 Response times when controlling the Extended Functions with encoder via safe on-board terminals

Function	Typical[1)]	Worst case[1)]
STO	2.5 x p9500 + r9780 + 1.5 ms	3 x p9500 + 6 x r9780
SBC	2.5 x p9500 + 2 x r9780 + 1 ms	3 x p9500 + 9 x r9780 + 2 ms
SS1 (time and acceleration controlled), SS2 selection until braking initiated	2.5 x p9500 + 3 ms	4 x p9500 + 4 ms
SAM response of the safe acceleration monitoring	2 x p9500 + 2 ms	2.5 x p9500 + r9780 + p9511
SOS standstill tolerance window violated	1.5 x p9500 + 2 ms	3 x p9500 + p9511+ 2 ms
SLS speed limit violated [2)]	2 x p9500 + 2 ms	3.5 x p9500 + p9511 + 2 ms
SSM [4)]	3 x p9500	3.5 x p9500 + p9511

Control of Extended Functions without encoder via PROFIsafe

The following table lists the response times from receiving the PROFIsafe telegram at the Control Unit up to initiating the particular response.

Table 8- 7 Response times when controlling the Extended Functions without encoder via PROFIsafe

Function		Typical	Worst case
STO		4 x p9500 + r9780	4 x p9500 + 3 x r9780
SBC		4 x p9500 + 2 x r9780	4 x p9500 + 9 x r9780
SS1 (time and acceleration controlled)		4 x p9500 + 2 ms	5 x p9500 + 2 ms
SAM response of the safe acceleration monitoring		3 x p9500 + 31 ms	3.5 x p9500 + r9780 + 57 ms
SLS speed limit violated [2)]	Standard	3 x p9500 + 31 ms	4.5 x p9500 + r9780 + 57 ms
	Starting phase[5)]	3 x p9500 + 31 ms + p9586[5)]	4.5 x p9500 + r9780 + 57 ms + p9586[5)]
SSM without encoder		6 x p9500 + p9587 + 4 ms	6,5 x p9500 + p9587 + 32 ms
SDI without encoder until braking initiated	Standard	2.5 x p9500 + p9587 + 6 ms	4 x p9500 + r9780 + p9587 + 32 ms
	Starting phase[5)]	2.5 x p9500 + p9587 + 6 ms + p9586[5)]	4 x p9500 + r9780 + p9587 + 32 ms + p9586[5)]

⚠ CAUTION

If the safety functions SLS without encoder or SDI without encoder are already selected when the gating pulses for the Power Module are enabled, then during the starting phase, it is absolutely imperative that you take into account the response times when limit values are violated and for system errors in order to extend the time value set in parameters p9586 and p9386[5)] with respect to the standard values (see the table above).

The standard response times (see the table above) are valid after the time interval, which is set in parameters p9586 and p9386.

The specified response times involve internal SINAMICS response times. Program run times in the F host and the transmission time via PROFIBUS or PROFINET are not taken into account.

Control of Extended Functions without encoder via terminals

The table below shows the response times after the appearance of a signal at the terminals.

Table 8- 8 Response times when controlling the Extended Functions without encoder via terminals

Function		Typical	Worst case
STO		2.5 x p9500 + r9780 + 1.5 ms	3 x p9500 + 6 x r9780
SBC		2.5 x p9500 + 2 x r9780 + 1 ms	3 x p9500 + 9 x r9780 + 2 ms
SS1 (time and acceleration controlled)		2.5 x p9500 + 3 ms	4 x p9500 + 4 ms
SAM response of the safe acceleration monitoring		3 x p9500 + 31 ms	3.5 x p9500 + r9780 + 57 ms
SLS speed limit violated [2)]	Standard	3 x p9500 + 31 ms	4.5 x p9500 + r9780 + 57 ms
	Starting phase[5)]	3 x p9500 + 31 ms + p9586[5)]	4.5 x p9500 + r9780 + 57 ms + p9586[5)]
SSM without encoder		4 x p9500 + p9587 + 4 ms	4.5 x p9500 + p9587 + 32 ms
SDI without encoder until braking initiated	Standard	2.5 x p9500 + p9587 + 6 ms	4 x p9500 + r9780 + p9587 + 32 ms
	Starting phase[5)]	2.5 x p9500 + p9587 + 6 ms + p9586[5)]	4 x p9500 + r9780 + p9587 + 32 ms + p9586[5)]

⚠ CAUTION

If the safety functions SLS without encoder or SDI without encoder are already selected when the gating pulses for the Power Module are enabled, then during the starting phase, it is absolutely imperative that you take into account the response times when limit values are violated and for system errors in order to extend the time value set in parameters p9586 and p9386[5)] with respect to the standard values (see the table above).

The standard response times (see the table above) are valid after the time interval, which is set in parameters p9586 and p9386.

Information on the tables:

[1] r9780 = 2 ms (fixed)

[2] SLS: Specification of the response time required for initiation of a braking reaction in the drive, or for the output of the "SOS selected" message to the motion control system.

[3] SSM: The data corresponds to the times between the limit value being undershot up to sending the information via PROFIsafe.

[4] SSM: The data corresponds to the times between the limit value being undershot up to output of the information via the terminals.

[5] This is how you determine the "delay time of the evaluation encoderless" (p9386/p9586)

The delay time p9586/p9386 is used to avoid unnecessary messages/signals while the converter starts.

1. To determine the minimum delay time p9586/p9386, record (trace) the starting behavior of the drive system (with the motor and the intended load). The STARTER trace function allows the value for p9586/p9386 to be determined.
2. In order to avoid unnecessary messages/signals, deselect the "SDI without encoder" and "SLS without encoder" functions.
3. Activate the trace function using the trigger "OFF2 → inactive" and as signals to be recorded/traced: the current in at least one motor phase and OFF2.

   After the ON command, record this motor phase current until I_{rated} is reached. Enter the time that it takes to reach I_{min} (+ 10 % reserve) into p9386.
4. Start the drive as it would normally start in your particular application.
5. From the trace, read-off the time, after which the current peak of the induction motor or the pulse pattern of the rotor position identification has ended, and the current has exceeded the "minimum current actual value sensing without encoder" p9588/p9388.
6. Enter this measured time + approx. 10 % into p9586 (as a result of the parameter doubling function, the same value is automatically entered into p9386).
7. Activate the "SDI without encoder" and "SLS without encoder" functions
8. Restart the machine, and keep the trace function activated.
9. Unnecessary messages/signals should no longer occur.

Overview of important parameters (see SINAMICS S110 List Manual)

- p0799[0...2] CU inputs/outputs sampling time
- p9500 SI Motion monitoring clock cycle (processor 1)
- p9511 SI Motion actual value sensing clock cycle (processor 1)
- p9586 SI Motion delay time of the evaluation, encoderless (CU)
- p9651 SI STO/SBC/SS1 debounce time (processor 1)
- p9652 SI Safe Stop 1 delay time (processor 1)
- r9780 SI monitoring clock cycle (Control Unit)

8.3.6 Residual risk

The fault analysis enables the machine manufacturer to determine the residual risk at his machine with regard to the drive unit. The following residual risks are known:

⚠WARNING

Due to the intrinsic potential of hardware faults, electrical systems are subject to additional residual risk, which can be expressed by means of the PFH value.

⚠WARNING

- Faults in the absolute track (C-D track), cyclic interchange of the drive phases (V-W-U instead of U-V-W) and reversal of the control direction may cause acceleration of the drive. Due to the fault, however, Category 1 and 2 stop functions to EN 60204-1 (fault response functions STOP B to D in accordance with Safety Integrated) are not activated.
  Stop function Category 0 to EN 60204-1 (fault response function STOP A in accordance with Safety Integrated) is not triggered until after the transition or delay time set in the parameter has elapsed. These faults are detected when SAM is selected (fault response functions STOP B/C) and stop function category 0 in accordance with EN 60204-1 (fault response function STOP A in accordance with Safety Integrated) is triggered as early as possible regardless of this delay. Electrical faults (defective components or similar) may also lead to the response stated above.
- Simultaneous failure of two power transistors (one in the upper and the other offset in the lower inverter bridge) in the inverter may cause brief movement of the drive, depending on the number of poles of the motor.
  Maximum value of this movement:
  Synchronous rotary motors: Max. movement = 180° / no. of pole pairs

⚠WARNING

- Violation of limits may briefly lead to a speed higher than the speed setpoint, or the axis may pass the defined position to a certain extent, depending on the dynamic response of the drive and on parameter settings.
- Mechanical forces greater than the maximum drive torque may force a drive currently operated in position control mode out of the Safe Operating Stop state (SOS) and trigger stop function category 1 in accordance with EN 60204-1 (fault reaction function STOP B).

⚠ WARNING

Within a single-encoder system:

a) a single electrical fault in the encoder

(or loose encoder shaft coupling), or a loose encoder housing
will cause a static state of the encoder signals (that is, they no longer follow a movement while still returning a correct level), and prevent fault detection while the drive is in stop state (for example, drive in SOS state).

Generally, the drive is held by the active closed-loop control. With closed loop control, it is conceivable that vertical (suspended) drives in particular can move without their motion being detected.

The risk of an electrical fault in the encoder as described under a) is only given for few encoder types with specific function principle (for example, encoders with microprocessor controlled signal generation such as the Heidenheim EQI, Hübner HEAG 159/160, or AMO measuring systems with sin/cos signals).
The risk analysis of the machine manufacturer must include all of the faults described above. Additional safety measures have to be taken for drives with suspended/vertical or dragging loads in order to exclude the faults described in a). For example:

- Use of an encoder with analog signal generation

In order to exclude the fault described in b), for example:

- Perform an FMEA regarding encoder shaft breakage (or slip of the encoder shaft coupling), and implement a solution to prevent loose encoder housings, integration of a fault exclusion process - for example according to IEC 61800-5-2

8.4 Safety Integrated Basic Functions

Note

You can ask your local sales office regarding the PFH values of the individual safety functions (also refer to the Section "Probability of failure of safety functions").

8.4.1 Safe Torque Off (STO)

In conjunction with a machine function or in the event of a fault, the "Safe Torque Off" (STO) function is used to safely disconnect the torque-generating motor power supply.

The following is executed when "Safe Torque Off" is selected:

- Each monitoring channel triggers safe pulse suppression via its switch-off signal path.
- A motor holding brake is closed (if connected and configured).

When the function is selected, the drive unit is in a "safe status". The Switching On Inhibited status prevents the drive unit from being restarted.

The integrated two-channel pulse suppression is the basis for this function.

Functional features of "Safe Torque Off"

- This function is integrated in the drive; this means that a higher-level controller is not required.
- The function must be enabled via parameter.
- When the "Safe Torque Off" function is selected:
  - The motor cannot be started accidentally.
  - The pulse suppression safely disconnects the torque-generating motor power supply.
  - The power unit and motor are not electrically isolated.
- Extended acknowledgment:

  If STO is selected/deselected (and p9307.0/p9507.0 = 1 are set), safety messages, in addition to fault messages, are also canceled automatically.

- The input terminals can be debounced to prevent signal faults triggering other faults. Parameters p9651 and p9851 are used to set filter times.

⚠ WARNING

Appropriate measures must be taken to ensure that the motor does not move once the motor power supply has been disconnected ("coast down") (e.g. enable the "Safe Brake Control" function with a vertical axis).

⚠ CAUTION

If two power transistors in the power unit (one in the upper and one offset in the lower inverter bridge) break down at the same time, this can cause a limited momentary movement.

For rotary synchronous motors the movement can be up to a maximum of 180° / number of pole pairs.

- The status of the "Safe Torque Off" function is displayed using parameters.

Enabling the "Safe Torque Off" (STO) function

The "Safe Torque Off" function is enabled via the following parameters:

- STO via onboard terminals:
  - **p9601.0 = 1, p9801.0 = 1**
  - p9601.2.= 0, p9801.2.= 0
  - p9601.3 = 0, p9801.3.= 0
- STO via PROFIsafe:
  - p9601.0 = 0, p9801.0 = 0
  - p9601.2 = 0, p9801.2 = 0
  - p9601.3 = 1, p9801.3 = 1
- STO via PROFIsafe and on-board terminal (F-DI 0):
  - p9601.0 = 1, p9801.0 = 1
  - p9601.2 = 0, p9801.2 = 0
  - p9601.3 = 1, p9801.3 = 1

Selecting/deselecting "Safe Torque Off"

The following is executed when "Safe Torque Off" is selected:

- Each monitoring channel triggers safe pulse suppression via its switch-off signal path.
- A motor holding brake is closed (if connected and configured).

If "Safe Torque Off" is deselected, this is treated as an internal safe acknowledgment. The following processes occur:

- Each monitoring channel cancels safe pulse suppression via its switch-off signal path.
- The safety prompt "Apply motor holding brake" is canceled.
- Any pending STOP F or STOP A commands are canceled (see r9772/r9872).
- The cause of the fault must be remedied.
- The messages in the fault memory also need to be reset using the general acknowledgment mechanism.

Note

If "Safe Torque Off" is selected and deselected again through one channel within the time in p9650/p9850, the pulses are suppressed, but no messages are output.

If you want a message to be displayed in this case, however, you have to reconfigure N01620/N30620 via p2118 and p2119 as an alarm or fault.

Restart after the "Safe Torque Off" function has been selected

1. Deselect the function.
2. Set drive enables.
3. Cancel "Switching On Inhibited" and switch the drive back on.
   - 1/0 edge at input signal "ON/OFF1" (cancel "Switching On Inhibited")
   - 0/1 edge at input signal "ON/OFF1" (switch on drive)

Status for "Safe Torque Off"

The status of the "Safe Torque Off" (STO) function is displayed via parameters r9772, r9872, r9773, and r9774.

As an alternative, the status of the function can be displayed using the configurable messages N01620 and N30620 (configured using p2118 and p2119).

Response time with the "Safe Torque Off" function

For the response times when the function is selected/deselected via input terminals, see the table in "Response times".

Parameter overview (see S110 List Manual)

- p9601 SI enable, functions integrated in the drive (CPU 1)
- r9772 CO/BO: SI status (CPU 1)
- r9773 CO/BO: SI status (CPU 1 + CPU 2)
- r9780 SI monitoring clock cycle (CPU 1)
- p9801 SI enable, functions integrated in the drive (CPU 2)
- r9872 CO/BO: SI status (CPU 2)
- r9880 SI monitoring clock cycle (CPU 2)

8.4.2 Safe Stop 1 (SS1, time controlled)

General description

The "Safe Stop 1" function can be used to stop the drive in accordance with EN 60204-1, stop category 1. The drive decelerates with the OFF3 ramp (p1135) once "Safe Stop 1" is selected and switches to "Safe Torque Off" once the delay time set in p9652/p9852 has elapsed.

CAUTION
When the SS1 (time-controlled) function has been activated through the parameterization of a delay in p9652/p9852, it is no longer possible to select STO directly via terminals.

Functional features of "Safe Stop 1"

SS1 is enabled when p9652 and p9852 (delay time) are not equal to "0".

- The precondition is the Basic Functions or STO are enabled via terminals and/or PROFIsafe:
  - p9601.0/p9801.0 = 1 (enable via terminals)
  - p9601.3/p9801.3 = 1 (enable via PROFIsafe)
- The settings for parameters p9652/p9852 shown below have the following effect:

Setting	Effect	Control type for Basic Functions
p9652/p9852 = 0	STO enabled	Via terminals
	STO enabled and SS1 not enabled (which also means that it cannot be selected)	Via Profisafe
p9652/p9852 > 0	SS1 enabled	Via Profisafe or terminals

- When SS1 is selected, the drive is braked along the OFF3 ramp (p1135) and STO/SBC is automatically initiated after the delay time has expired (p9652/p9852).

  As soon as the function is selected, the delay time will start to run down - even if the function is deselected during this time. In this case, after the delay time has expired, the STO/SBC function is selected and then again de-selected immediately.

  Note

  So that the drive is able to travel down the OFF3 ramp completely and any motor holding brake present can be applied before the pulse is switched off, the delay time can be set as follows:
  - Motor holding brake parameterized: Delay time ≥ p1135 + p1228 + p1217
  - Motor holding brake not parameterized: Delay time ≥ p1135 + p1228
- The selection is realized through two channels - however braking along the OFF3 ramp, only through one channel.
- The input terminals can be debounced to prevent signal faults triggering other faults. Parameters p9651 and p9851 are used to set filter times.

Enabling function Safe Stop 1

The "Safe Stop 1" (SS1) function is enabled via the following parameters:

- SS1 via terminals or PROFIsafe:
  - By entering the delay time in p9652 and p9852

Prerequisite

STO via terminals (p9601.0 = p9801.0 =1) or Basic Functions via PROFIsafe (p9601.2 = p9801.2 = 0 and p9601.3 = p9801.3 = 1) must be configured.

In order that the drive can brake down to a standstill even when selected through one channel, the time in p9652/p9852 must be shorter than the sum of the parameters for the data cross-check (p9650/p9850 and p9658/p9858). Otherwise the drive will coast down after the time p9650 + p9658 has elapsed.

Status for "Safe Stop 1"

The status of the "Safe Stop 1" function is displayed via parameters r9772, r9773, r9774, and r9872.

Alternatively, the status of the functions can be displayed using the configurable messages N01621 and N30621 (configured using p2118 and p2119).

Overview of important parameters (see SINAMICS S110 List Manual)

- p1135[0...n] OFF3 ramp-down time
- p9650 SI F-DI changeover tolerance time (processor 1)
- p9651 SI STO/SBC/SS1 debounce time (processor 1)
- p9652 SI Safe Stop 1 delay time (CPU 1)
- r9772 CO/BO: SI status (CPU 1)
- r9773 CO/BO: SI status (CPU 1 + CPU 2)
- r9872 CO/BO: SI status (CPU 2)
- p9850 SI F-DI changeover tolerance time (processor 2)
- p9851 SI STO/SBC/SS1 debounce time (processor 2)
- p9852 SI Safe Stop 1 delay time (CPU 2)

8.4.3 Safe Brake Control (SBC)

Description

The "Safe Brake Control" function (SBC) is used to control holding brakes that function according to the quiescent current principle (e.g. motor holding brakes).

The command for releasing or applying the brake is transmitted to the Safe Brake Relay via the Power Module. The Safe Brake Relay then carries out the action and activates the outputs for the brake accordingly.

Brake activation via the brake connection on the Safe Brake Relay is carried out using a safe, two-channel method.

Note

To ensure that this function can be used for Blocksize Power Modules, a Safe Brake Relay must be used (for more information, see the Equipment Manual SINAMICS S110).

When the Power Module is configured automatically, the Safe Brake Relay is detected and the motor holding brake type is defaulted (p1278 = 0).

⚠ WARNING

"Safe Brake Control" does not detect faults in the brake itself, such as brake winding short-circuit, worn brakes, etc.

If a cable breaks, this is only recognized by the "Safe Brake Control" function when the status changes, i.e. when the brake is applied/released.

Functional features of "Safe Brake Control" (SBC)

- When "Safe Torque Off" is selected or when safety monitors are triggered, "SBC" is performed with safe pulse suppression.
- Unlike conventional brake control, SBC is executed via p1215 through two channels.
- SBC is executed regardless of the brake control or mode set in p1215. SBC is not recommended, however, when 1215 = 0 or 3.
- The function must be enabled via parameter.
- When SBC is enabled, the holding brake is applied immediately with forced dormant error detection each time "Safe Torque Off" is selected.
- The input terminals can be debounced to prevent signal faults triggering other faults. Parameters p9651 and p9851 are used to set filter times.

Enabling the "Safe Brake Control (SBC)" function

The "Safe Brake Control" function is enabled via the following parameters:

- p9602 SI enable safe brake control (CPU 1)
- p9802 SI enable safe brake control (CPU 2)

The "Safe Brake Control" function cannot be used until at least one safety monitoring function has been enabled (i.e. p9601 = p9801 ≠ 0).

Two-channel brake control

The function "Safe Brake Control" is carried out using a two-channel method, in which both the plus-potential (24 V) leading and the ground-potential leading brake connection are connected to the Safe Brake Relay.

The brake diagnosis can only reliably detect a malfunction in either of the switches in the Safe Brake Relay when the status changes (when the brake is released or applied).

If the Safe Brake Relay or its controller detects a fault, the brake current is switched off and a safe status is reached.

Response time with the "Safe Brake Control" function

For the response times when the function is selected/deselected via input terminals, see the table in "Response times".

NOTICE
When controlling the brake via a relay using "Safe Brake Control": A relay cannot be used to apply the brake if "Safe Brake Control" is being used. It may result in faults being triggered in the brake control.

Overview of important parameters (see SINAMICS S110 List Manual)

- p9602 SI enable safe brake control (CPU 1)
- r9780 SI monitoring clock cycle (CPU 1)
- p9802 SI enable safe brake control (CPU 2)
- r9880 SI monitoring clock cycle (CPU 2)

8.4.4 Safety faults

The fault messages for Safety Basic Functions are stored in the standard message buffer and can be read from there. In contrast, the fault messages for Safety Integrated Extended Functions are stored in a separate safety message buffer (see section "Message buffer").

When faults associated with Safety Integrated Basic Functions occur, the following stop responses can be initiated:

Table 8- 9 Stop responses to Safety Integrated Basic Functions

Stop response	Triggered ...	Action	Effect
STOP A cannot be acknowledged	For all non-acknowledgeable safety faults with pulse suppression.	Trigger safe pulse suppression via the switch-off signal path for the relevant monitoring channel. During operation with SBC: apply motor holding brake.	The motor coasts to a standstill or is braked by the holding brake.
STOP A	For all acknowledgeable safety faults with pulse suppression. As a follow-up reaction of STOP F.		
	STOP A corresponds to Stop Category 0 in accordance with EN 60204-1. With STOP A, the motor is switched directly to zero torque via the "Safe Torque Off (STO)" function. A motor at standstill cannot be started again accidentally. A moving motor coasts to standstill. This can be prevented by using external braking mechanisms (e.g. armature short-circuiting, holding or operational brake). When STOP A is active, "Safe Torque Off" (STO) is effective.		
STOP F	If an error occurs in the data cross-check.	Transition to STOP A.	Follow-up reaction STOP A with adjustable delay (default setting without delay) if one of the safety functions is selected
	STOP F is permanently assigned to the data cross-check (DCC). In this way, errors are detected in the monitoring channels. After STOP F, STOP A is triggered. When STOP A is active, "Safe Torque Off" (STO) is effective.		

⚠ WARNING

With a vertical axis or pulling load, there is a risk of uncontrolled axis movements when STOP A/F is triggered. This can be prevented by using "Safe Brake Control (SBC)" and a holding brake (not a safety brake!) with sufficient holding force.

Acknowledging the safety faults

Faults associated with Safety Integrated Basic Functions must be acknowledged as follows:

1. Remove the cause of the fault.
2. Deselect "Safe Torque Off" (STO).
3. Acknowledge the fault.

If safety commissioning mode is exited when the safety functions are switched off (p0010 ≠ 95 when p9601 = p9801 = 0), all the safety faults can be acknowledged.

Once safety commissioning mode has been selected again (p0010 = 95), all the faults that were previously present reappear.

NOTICE
Safety faults can also be acknowledged (as with all other faults) by switching the drive unit off and then on again (POWER ON). If this action has not eliminated the fault cause, the fault is displayed again immediately after power up.

Acknowledgment via PROFIsafe

The higher-level controller sets the signal "Internal Event ACK" via the PROFIsafe telegram (STW bit 7). A falling edge in this signal resets the status "Internal Event" and so acknowledges the fault.

Description of faults and alarms

Note

The faults and alarms for SINAMICS Safety Integrated are described in the following documentation:

References: SINAMICS S110 List Manual

8.4.5 Forced dormant error detection

Forced dormant error detection or test of the switch-off signal paths for Safety Integrated Basic Functions

The forced dormant error detection function at the switch-off signal paths is used to detect software/hardware faults at both monitoring channels in time and is automated by means of activation/deactivation of the "Safe Torque Off" function.

To fulfill the requirements of ISO 13849-1 regarding timely error detection, the two switch-off signal paths must be tested at least once within a defined time to ensure that they are functioning properly. This functionality must be implemented by means of forced dormant error detection function, triggered either in manual mode or by the automated process.

A timer ensures that forced dormant error detection is carried out as quickly as possible.

- p9659 SI timer for the forced dormant error detection.

Forced dormant error detection must be carried out at least once during the time set in this parameter.

Once this time has elapsed, an alarm is output and remains present until forced dormant error detection is carried out.

The timer returns to the set value each time the STO function is deactivated.

When the appropriate safety devices are implemented (e.g. protective doors), it can be assumed that running machinery will not pose any risk to personnel. For this reason, an alarm is only output to inform the user that a forced dormant error detection run is due and to request that this be carried out at the next available opportunity. This alarm does not affect machine operation.

The user must set the time interval for carrying out forced dormant error detection to between 0.00 and 9000.00 hours depending on the application (factory setting: 8.00 hours).

Examples of when to carry out forced dormant error detection:

- When the drives are at a standstill after the system has been switched on (POWER ON).
- When the protective door is opened.
- At defined intervals (e.g. every 8 hours).
- In automatic mode (time and event dependent)

NOTICE
The timer of the Basic Functions will be reset if the associated forced dormant error detection is executed and the Extended Functions are used simultaneously. Discrepancy is not checked at the terminals used to select the Basic Functions as long as STO is set by the Extended Functions. That is, the forced dormant error detection procedure of the Basic Functions always has to be executed without simultaneous selection of STO or SS1 by the Extended Functions. It is otherwise not possible to verify the correct control through the terminals.

⚠WARNING

For the SINAMICS S110 drive system, to perform a self test, a POWER OFF/POWER ON[1)] must be performed for the Control Unit at least once a year. This also applies, if the forced checking procedure of the safety functions takes place more frequently than once per year.

[1)] For SINAMICS S110, the Control Unit can also be supplied from the line connection of the Power Module. For SINAMICS S110, a POWER OFF/POWER ON means line supply off/on for the Power Module and – if one is being used – also for the 24V power supply.

8.5 Safety Integrated Extended Functions

Note

You can ask your local sales office regarding the PFH values of the individual safety functions (also refer to the Section "Probability of failure of safety functions").

8.5.1 Safety functions "with encoder" / "without encoder"

For activation of the Safety Integrated functions "with encoder" and "without encoder", set the parameters p9306 and p9506 (factory setting = 0). You can also make this setting by selecting "with encoder" or "without encoder" on the Safety Integrated STARTER screen. This STARTER screen can be found for each drive under "Functions" → "Safety Integrated".

- Operation with encoder
  p9306 = p9506 = 0
- Operation without encoder
  p9306 = p9506 = 1
  or
  p9306 = p9506 = 3

"Park" mode for Safety Integrated Extended Functions "with encoder"

Note

When a drive object for which Safety Integrated Extended Functions **with encoder** are enabled is switched to "Park" mode, the Safety Integrated software responds by selecting STO without generating a separate message. This internal STO selection is displayed in parameter r9772.19.

Restrictions for Safety Integrated Extended Functions "without encoder"

The following restrictions apply for the Safety Extended Functions "without encoder":

	Only operation with motors of type
1	SIEMOSYN

	No operation for units with the following design
1	Blocksize GX
2	Chassis

	Technological restrictions
1	Pulling loads are not permitted
2	The slip of an induction motor must be taken into account

	No operation in conjunction with the following functions[1)]
1	Flying restart
2	Current limitation I_{lim}
3	DC brake
4	Compound brake
5	SW pulse logic
6	Motor identification
7	Motor data set changeover of synchronous and induction motors is not permitted
8	Pulse pattern technique for encoderless vector control of synchronous motors (selected using p1750.5)

1) Note: Activation of a Safety motion monitoring function and simultaneously using these drive functions results in a Safety fault.

	Performance restrictions
1	Within1 s only one start-up and one down-ramp are permitted[2)]
2	The permissible ramp time is a minimum of 1 second for synchronous motors (the ramp time depends on the power rating)
3	Current controller cycle of 32.5 µs result in a fault in the Motor Module[3)]

2) Note: For a cycle "0 → $+n_{set}$ → $-n_{set}$→ 0, a minimum period of 2 s is required.

2) Note: This means that a current controller cycle of 62.5 µs on a double-axis Motor Module with 2 Safety axes is also not possible.

⚠ CAUTION
Safety Integrated Extended Functions "without encoder" must not be used if the motor, after it has been switched off, can still be accelerated by the mechanical elements of the connected machine component. Whether or not a mechanical brake is installed is irrelevant here.

Examples:

1. For the hoisting gear of a crane, the suspended load can accelerate the motor as soon as the motor is switched off. In this case, the safety functions "without encoder" are not permitted.

   Even if the mechanical brake of the hoisting gear is generally applied after the motor has been switched off, the use of safety functions "without encoder" in this application is still prohibited.
2. A horizontal conveyor is always braked to a standstill due to friction as soon as the motor is switched off. In this case, the safety functions "without encoder" can be used without any restriction.

8.5.2 Safe Torque Off

In addition to the control options specified under Safety Integrated Basic Functions, "Safe Torque Off (STO) under Safety Integrated Extended Functions can also be activated via PROFIsafe.

Functional features of "Safe Torque Off"

The functionality of "Safe Torque Off (STO)" is described in the section, "Safety Integrated Basic Functions".

8.5.3 Safe Stop 1 (SS1)

8.5.3.1 Safe Stop 1 (SS1, time and acceleration controlled)

The SS1 function with an encoder monitors whether motor acceleration reaches impermissible levels during the SS1 time.

The "Safe Stop 1" function can be used to stop the drive in accordance with EN 60204-1, stop category 1. The drive brakes with the OFF3 ramp (p1135) once "Safe Stop 1" is selected and switches to "Safe Torque Off" (STO) once the delay time has elapsed (p9356/p9556) or when the shutdown speed is reached (p9360/p9560).

If the drive complies with acceleration monitoring limits, STO is triggered when the shutdown speed is reached or after the SS1 time has expired. If acceleration monitoring limits are violated, messages C01706 and C30706 are output and the drive is stopped with STOP A.

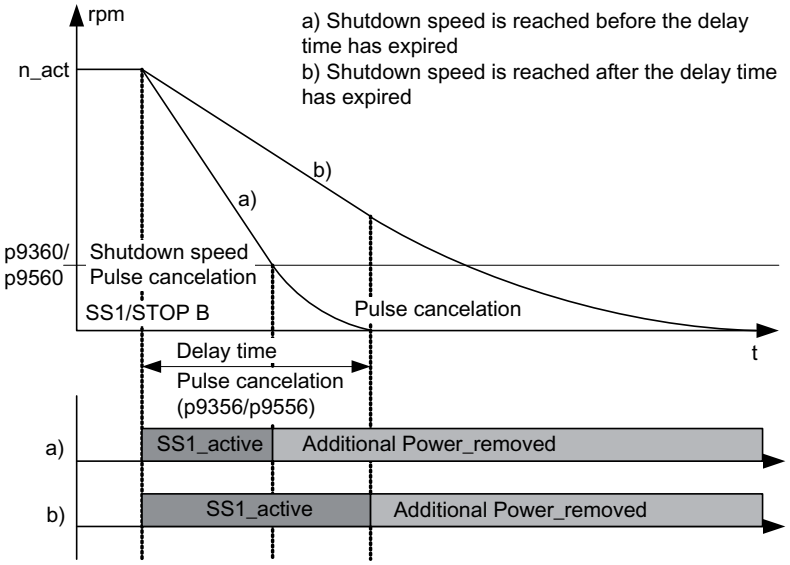

Figure 8-3 Sequence with SS1 selection

Functional features of "Safe Stop 1"

- The delay time starts after the function has been selected. If SS1 is deselected again during this time, the STO function is selected and deselected again straightaway after the delay time has elapsed or the speed has dropped below the shutdown speed.
- The selection is realized through two channels - however braking along the OFF3 ramp, only through one channel.
- The "Safe Acceleration Monitor" (SAM) function is selected during braking (see "Safe Acceleration Monitor").

Note

Activating SS1 may cause the higher-level control (PLC, motion controller), which enters the speed setpoint, to interrupt the ramp function by triggering OFF2.
The device behaves in this way as a result of a fault reaction triggered by OFF3 activation. This fault reaction must be avoided using the appropriate parameterization/configuration.

Note

If you use SS1 together with EPOS, then as fault reaction to F07490 (EPOS: enable withdrawn while traversing) OFF2 is not permitted. The reaction can be configured using p2100/p2101.

Commissioning

Note

When "Safe Stop 1" (SS1) is installed, the function "Safe Acceleration Monitor" (SAM) is active. For parameterizing the "Safe Acceleration Monitor" (SAM) function

→ see section "Safe Acceleration Monitor (SAM)".

The delay time (SS1 time) is set using parameters p9356 and p9556. The wait time until the pulses are suppressed can be shortened by defining a shutdown speed in p9360 and p9560.

To enable the drive to decelerate to standstill, the time set in p9356/p9556 must be sufficient to allow the drive to decelerate to below the shutdown speed in p9360/p9560 along the OFF3 ramp (p1135).

Note

So that the drive is able to travel down the OFF3 ramp completely and any motor holding brake present can be applied, the delay time can be set as follows:

- Motor holding brake parameterized: Delay time ≥ p1135 + p1228 + p1217
- Motor holding brake not parameterized: Delay time ≥ p1135 + p1228

When setting a shutdown speed in p9360/p9560, you must be certain that the safety of personnel or machinery will not be compromised at speeds less than or equal to this speed or as a result of subsequent coasting caused by the pulse inhibit.

The actual speed tolerance is set using parameters p9348/p9548 (for more information please see section "Safe Acceleration Monitor (SAM)").

Responses

Speed limit violated (SAM):

- STOP A
- Safety message C01706/C30706

System errors:

1. STOP F with subsequent STOP A
2. Safety message C01711/C30711

Status for "Safe Stop 1"

The status of the "Safe Stop 1" function is displayed using the following parameters:

- r9722.1 CO/BO: SI Motion status signals, SS1 active
- r9722.0 CO/BO: SI Motion status signals, STO active (power removed)

8.5.3.2 Safe Stop 1 without encoder (time and speed controlled)

Two encoderless Safe Stop 1 (SS1) monitoring functions can be set with parameters p9506/p9306:

- p9506/p9306 = 3: Safe monitoring of acceleration (SAM) / delay time

  The function is identical to "Safe Stop 1" with encoder, which was described in the previous section.
- p9506/p9306 = 1: Safe brake ramp monitoring (SBR)

Brake ramp monitoring

The motor is immediately decelerated along the OFF3 ramp as soon as SS1 is triggered. Monitoring is activated once the delay time in p9582/p9382 has elapsed. The drive is monitored during braking to ensure the set brake ramp is adhered to. As soon as the speed drops below the shutdown speed (p9560/p9360), safe monitoring of the brake ramp is deactivated and safe pulse suppression (STO) is activated. If the set brake ramp (SBR) is violated (exceeded), messages C01706 and C30706 are output and the drive is stopped with STO (STOP A).

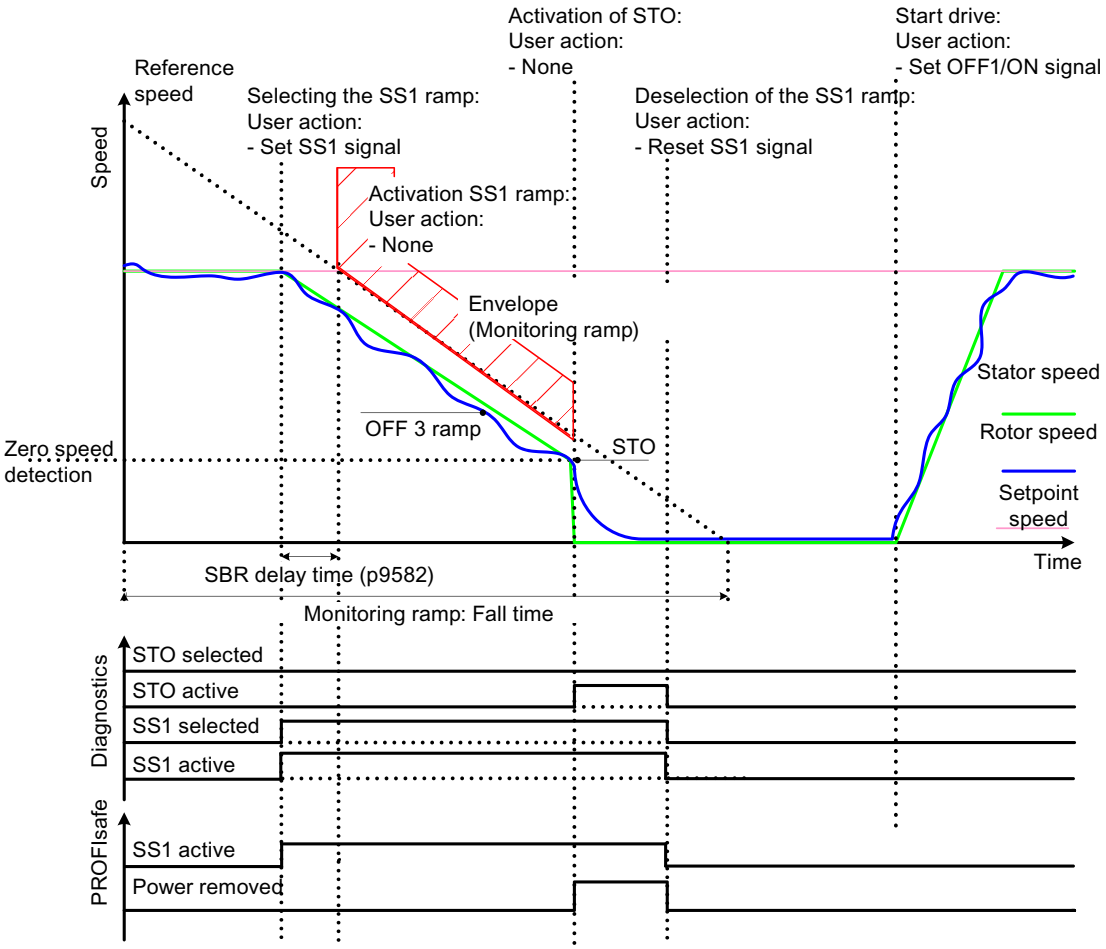

Figure 8-4 Sequence for "Safe Stop 1" without encoder (p9506/p9306 = 1)

Parameterization of the brake ramp "without encoder"

p9581/p9381 and p9583/p9383 are used to set the steepness of the brake ramp (SBR). Parameters p9581/p9381 determine the reference speed; parameters p9583/p9383 define the ramp-down time from the reference speed to the value 0. Parameters p9582/p9382 are used to set the time between the triggering of Safe Stop 1 and the start of brake ramp monitoring.

8.5.3.3 Safe Stop 1 - Parameter

Overview of important parameters (see SINAMICS S110 List Manual)

- p1135[0...n] OFF3 ramp-down time
- p9301 SI Motion enable safety functions (CPU 2)
- p9501 SI Motion enable safety functions (CPU 1)
- p9306 SI Motion function specification (CPU 2)
- p9506 SI Motion function specification (CPU 1)
- p9356 SI Motion pulse suppression delay time (CPU 2)
- p9556 SI Motion pulse suppression delay time (CPU 1)
- p9360 SI Motion pulse suppression shutdown speed (CPU 2)
- p9560 SI Motion pulse suppression shutdown speed (CPU 1)
- r9722.0...15 CO/BO: SI Motion drive-integrated status signals

Only for SS1 with encoder and SS1 without encoder with acceleration monitoring (p9506 = 3):

- p9348 SI Motion SAM actual speed tolerance (CPU 2)
- p9548 SI Motion SAM actual speed tolerance (CPU 1)

Only for SS1 without encoder (p9506 = 1):

- p9381 SI Motion brake ramp reference value (CPU 2)
- p9581 SI Motion brake ramp reference value (CPU 1)
- p9382 SI Motion brake ramp delay time (CPU 2)
- p9582 SI Motion brake ramp delay time (CPU 1)
- p9383 SI Motion brake ramp monitoring time (CPU 2)
- p9583 SI Motion brake ramp monitoring time (CPU 1)

8.5.4 Safe Stop 2 (SS2)

The "Safe Stop 2" (SS2) safety function is used to brake the motor safely on the OFF3 ramp down (p1135) with subsequent transition to the SOS state (see the "Safe Operating Stop" chapter) after the delay time expires (p9352/p9552). The delay time set must allow the drive to decelerate to a standstill within this time. The standstill tolerance (p9330/p9530) may not be violated after this time.

After the braking operation is completed, the drive remains in the speed controlled mode with the speed setpoint n = 0. The full torque is available.

Note

The "Safe Stop 2" (SS2) safety function can only be used with an encoder.

The setpoint input (e.g. from the setpoint channel, or from a higher-level control) remains inhibited as long as SS2 is selected. The "Safe Acceleration Monitor" (SAM) function is active during braking.

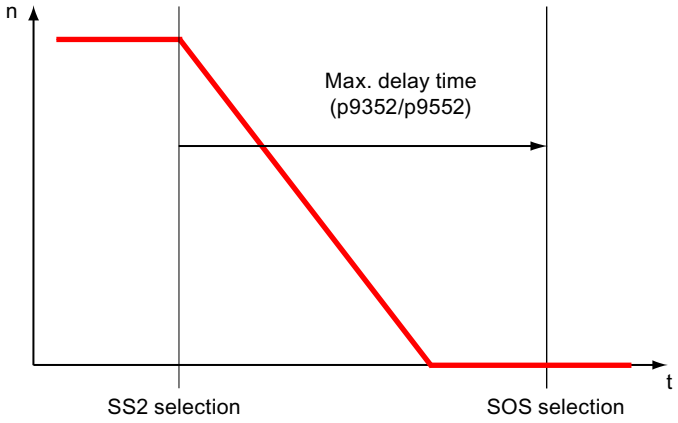

Figure 8-5 Sequence with SS2 selection

Note

Activating SS1 can mean that the higher-level control (PLC, motion controller), which enters the speed setpoint, interrupts the ramp function with OFF2. The reason for this is a fault response of this device, triggered by the OFF3 activation. This fault reaction can be avoided using suitable parameterization/configuration.

Responses

Speed limit violated (SAM):

- STOP A
- Safety message C01706/C30706

Standstill tolerance violated in p9330/p9530 (SOS):

- STOP B with subsequent STOP A
- Safety message C01707/C30707

System errors:

- STOP F with subsequent STOP A
- Safety message C01711/C30711

Overview of important parameters (see SINAMICS S110 List Manual)

- p1135[0...n] OFF3 ramp-down time
- p9301 SI Motion enable safety functions (CPU 2)
- p9501 SI Motion enable safety functions (CPU 1)
- p9330 SI Motion standstill tolerance (CPU 2)
- p9530 SI Motion standstill tolerance (CPU 1)
- p9348 SI Motion SAM actual speed tolerance (CPU 2)
- p9548 SI Motion SAM actual speed tolerance (CPU 1)
- p9352 SI Motion transition time STOP C to SOS (CPU 2) [1)]
- p9552 SI Motion transition time STOP C to SOS (CPU 1) [1)]
- r9722.0...15 CO/BO: SI Motion drive-integrated status signals

[1)] STOP C corresponds to SS2.

8.5.4.1 EPOS and Safe Stop 2

Since the function SS2 – with its setpoint-independent braking – is not suitable for use with EPOS, the Safe Operating Stop (SOS) function can be used with delay.

On selection of SOS, the EPOS function "intermediate stop" (p2640 = 0) ensures that EPOS is able to stop the drive in its tracks and then keep it under control in this state before the SOS becomes active. The maximum necessary braking time (from p2573 and p2645 from EPOS) must then be entered in the delay time for SLS/SOS (p9551/p9351) with a small safety addition: This ensures that the drive is stationary before SOS becomes active.

To do this, proceed as follows:

1. Connect the EPOS function "intermediate stop" (p2640) with the SOS selection (r9720.3).
2. Enter the maximum necessary braking time from EPOS (depending on the values set in p2573 and p2645) with a safety addition (approx. +5%) in the SOS delay time (p9551/p9351).

Overview of important parameters (see SINAMICS S110 List Manual)

- p2645 CI: EPOS direct setpoint input/MDI, deceleration override
- p2573 EPOS maximum deceleration
- p2594 CI: EPOS maximum speed, externally limited
- p2640 BI: EPOS intermediate stop (0 signal)
- p9351 SI Motion SLS changeover delay time (CPU 2)
- p9551 SI Motion SLS(SG) changeover delay time (CPU 1)
- r9720.0...10 CO/BO: SI Motion drive-integrated control signals
- r9733[0...1] CO: SI Motion setpoint speed limit effective

8.5.5 Safe Operating Stop (SOS)

General description

This function serves for fail-safe monitoring of the standstill position of a drive.

Personnel can enter the protected machine areas without having to shut down the machine as long as SOS is active.

Drive standstill is monitored by means of an SOS tolerance window (p9330 and p9530). The function SOS comes into effect in the following cases:

- After SOS has been selected and after the delay time set in p9351/p9551 has expired. The drive must be braked to standstill within this delay time (e.g. by the controller).
- As a consequence of SS2
- As a consequence of STOP C (corresponds to selection SS2)
- As a consequence of STOP D (corresponds to selection SOS)
- As a consequence of STOP E

When this function is activated, the current actual position is saved as a comparative position, until SOS is deselected again. Any delay time is cleared after SOS is deselected and the drive can be immediately moved.

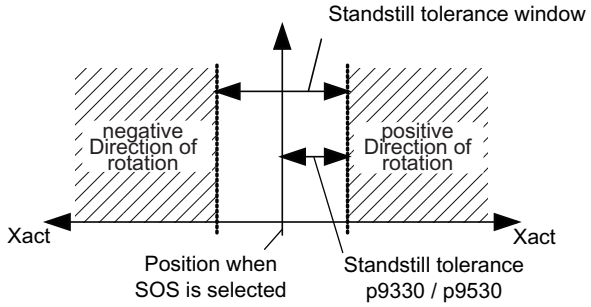

Figure 8-6 Standstill tolerance

Note

The "Safe Operating Stop" (SOS) safety function can only be used with an encoder.

Functional features of "Safe Operating Stop"

- The drive remains in the closed-loop control mode.
- A programmable standstill tolerance window is available.
- STOP B is the stop response after the standstill tolerance window has been violated

Note

The size of the tolerance window should be slightly above the standard standstill monitoring limit, otherwise the standard monitoring functions will no longer be effective.

Parameter r9731 displays the safe position accuracy (load side) that can be achieved as a maximum, based on the acquisition of the actual value for the safe motion monitoring functions.

Responses

Standstill tolerance violated in p9330/p9530:

- STOP B with subsequent STOP A
- Safety message C01707/C30707

System errors:

- STOP F
- Safety message C01711/C30711

Overview of important parameters (see SINAMICS S110 List Manual)

- p9301 SI Motion enable safety functions (CPU 2)
- p9501 SI Motion enable safety functions (CPU 1)
- p9330 SI Motion standstill tolerance (CPU 2)
- p9530 SI Motion standstill tolerance (CPU 1)
- p9351 SI Motion SLS changeover delay time (CPU 2)
- p9551 SI Motion SLS changeover delay time (CPU 1)
- r9722.0...15 CO/BO: SI Motion drive-integrated status signals
- r9731 SI Motion safe position accuracy

8.5.6 Safely Limited Speed (SLS)

The Safely Limited Speed (SLS) function is used to protect a drive against unintentionally high speeds in both directions of rotation. This is achieved by monitoring the current drive speed up to a speed limit.

Safely Limited Speed prevents a parameterized speed limit from being exceeded. Limits must be specified based on results of the risk analysis. Up to 4 different SLS speed limits can be parameterized via parameter p9331[0..3]/p9531[0..3]; it is possible to switch between them even if the SLS is activated.

8.5.6.1 Safely Limited Speed (SLS)

Functional features

To ensure that the drive reaches the reduced speed below the new speed limit value once the delay time has elapsed, it must be decelerated accordingly within the delay time by means of the higher-level motion control/setpoint channel. The previous SLS limit value is still active during the delay time.

- A selected speed limit is activated once SLS has been selected and after the delay time (p9351/p9551) has elapsed. When switching to a lower speed limit, the speed must be decelerated below the new maximum limit within this delay time.
- If the actual speed is higher than the new speed limit after the delay time has elapsed, a message is created with the parameterized stop response.
- The stop response (STOP A, STOP B, STOP C or STOP D) is parameterized via p9363/p9563.
- During changeover to a higher speed limit, the delay time does not take effect.
- 4 parameterizable speed limits p9331[0...3] and p9531[0...3]

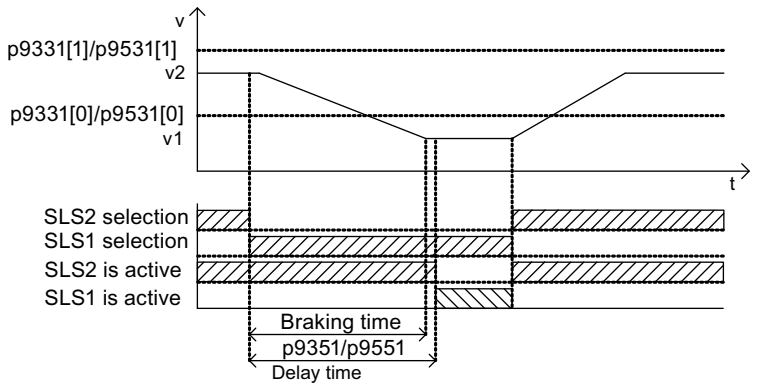

Figure 8-7 Delay time SLS phase changeover

A speed setpoint limit can be set as percentage in p9533. This value is used to calculate a speed setpoint limit r9733, depending on the selected speed limit p9531[x].

By contrast to SLS limit parameters, this parameter specifies limits on the motor side instead of limits on the load side.

- r9733[0] = p9531[x] * p9533; x = selected SLS stage
- r9733[1] = - p9531[x] * p9533; x = selected SLS stage

r9733 is used, for example, for transmitting values to a higher-level control, which can then, for example, adjust traversing speeds to the SLS levels. r9733 is a part of the Safety Info Channel (SIC).

Changeover of SLS limits

The changeover is controlled binary-coded via two F-DIs or two PROFIsafe control bits. The speed selection status can be checked using the r9720.9/r9720.10 parameters. Parameters r9722.9 and r9722.10 indicate the actual speed limit, bit r9722.4 must carry a "1" signal.

Table 8- 10 Changeover of speed limits:

F-DI for bit 1 (r9720.10)	F-DI for bit 0 (r9720.9)	Speed limit
0	0	p9331**[0]**/p9531**[0]**
0	1	p9331**[1]**/p9531**[1]**
1	0	p9331**[2]**/p9531**[2]**
1	1	p9331**[3]**/p9531**[3]**

The changeover from a lower to a higher speed limit takes effect without any delay.

The changeover from a higher to a lower limit triggers a delay time which can be set at the corresponding parameter (p9351 and p9551).

⚠ CAUTION

SLS level 1 must be defined as the lowest speed limit.

SLS level 1 is activated after two unacknowledged discrepancy errors; in other words, 0 is the failsafe value for the two F-DIs for speed level selection. The SLS levels to be switched between must, therefore, always be parameterized in ascending order, i.e. with SLS level 1 as the lowest speed and SLS level 4 as the highest.

Responses

Speed limit exceeded:

- Configured subsequent stop STOP A / B / C / D by means of p9363/p9563
- Safety message C01714/C30714

System errors:

- STOP F
- Safety messages C01711/C30711

Overview of important parameters (see SINAMICS S110 List Manual)

- p9301.0 SI Motion enable safety functions (CPU 2)
- p9501.0 SI Motion enable safety functions (CPU 1)
- p9331[0...3] SI Motion SLS limits (CPU 2)
- p9531[0...3] SI Motion SLS (SG) limits (CPU 1)
- p9533 SI Motion SLS speed setpoint limit (CPU 1)
- p9351 SI Motion SLS changeover delay time (CPU 2)
- p9551 SI Motion SLS changeover delay time (CPU 1)
- p9363[0...3] SI Motion SLS stop response (CPU 2)
- p9563[0...3] SI Motion SLS (SG)-specific stop response (CPU 1)
- r9720 CO/BO: SI Motion drive-integrated control signals
- r9722.0...15 CO/BO: SI Motion drive-integrated status signals
- r9733[0...1] CO: SI Motion effective speed setpoint limiting

8.5.6.2 Safely Limited Speed without encoder

Functions

Two different encoderless Safely Limited Speed monitoring functions can be set with the parameters p9506/9306:

- p9506/9306 = 3: Safe monitoring of acceleration (SAM) / delay time
  The function is identical to "Safely Limited Speed with encoder", which was described in the previous section.
- p9506/9306 = 1: Safe brake ramp monitoring (SBR)

Monitoring the brake ramp

- After activation of the monitoring of the speed setpoint limit "Safely Limited Speed without encoder", the motor is immediately braked with the OFF3 ramp from the actual speed to below the selected SLS limit value.
- Parameters p9582/p9382 are used to set the delay time for the brake ramp monitoring.
- Monitoring of the brake ramp is activated once the delay time in p9582/p9382 has elapsed. If the actual speed of the drive violates the brake ramp (SBR) during braking, Safety messages C01706 and C30706 are output and the drive is stopped with STOP A.
- The newly selected SLS limit value is also taken over as the new limit speed, if either
  - the SBR ramp has reached the new SLS limit value, or
  - the actual speed of the drive was below the new SLS limit value for at least the time set in p9582/p9382.
- The function "Safely Limited Speed without encoder" then monitors whether the actual speed remains below the newly selected SLS limit value.
- The parameterized stop response (p9563[x]) is triggered if the SLS limit value is exceeded.

Configuring the limits

- The speed limits for Safely Limited Speed without encoder are configured in exactly the same way as described for Safely Limited Speed with encoder.
- Only STOP A and STOP B may be configured as stop responses for "Safely Limited Speed" (SLS) without encoder.

Signal profile for SLS without encoder

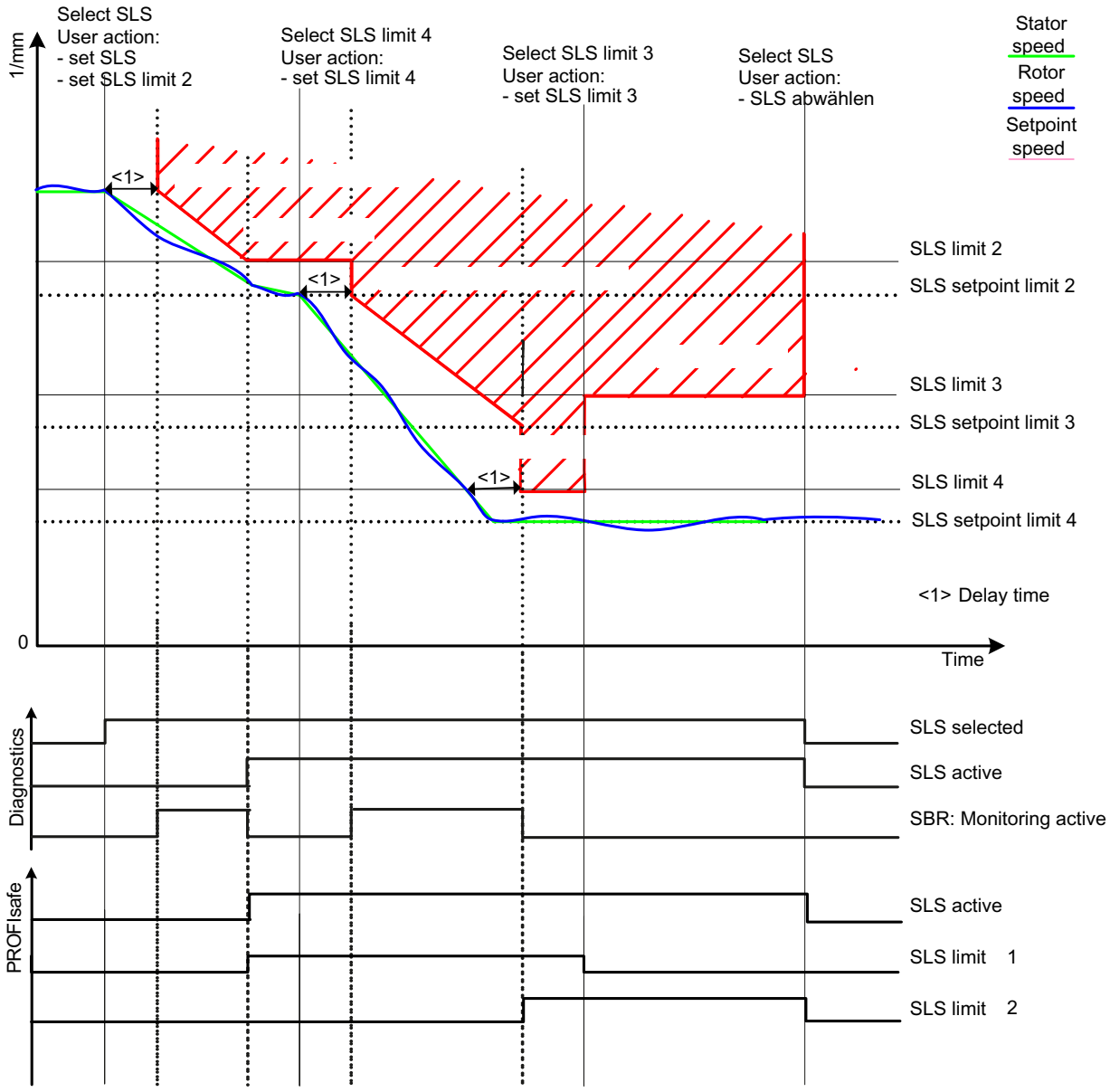

Figure 8-8 Signal profile for SLS without encoder

Restart after OFF2

If the drive has been switched off via OFF2/STO, the following steps need to be carried out before a restart can be performed:

1st scenario:

- State after power-on: SLS selected, STO selected, OFF2 active
- Deselect STO.
- The drive enable must be given within 5 seconds via a positive edge at OFF1, otherwise STO is reactivated.

2nd scenario

- Situation: Run until standstill with SLS selected, then OFF2 activated
- Select STO
- Deselect STO.

  STO activated internally via OFF2: This activation must be undone by selection/deselection.
- The drive enable must be given within 5 seconds via a positive edge at OFF1, otherwise STO is reactivated.

3rd scenario

- Situation: Run until standstill with SLS selected, then OFF2 activated
- Deselect SLS
- Select SLS

  STO activated internally via OFF2: This activation must be undone by selecting/deselecting SLS.
- After this the drive enable must be given by a positive edge at OFF1.

4th scenario

- Situation: All Safety Integrated functions are deselected
- After this the drive enable must be given by a positive edge at OFF1.

Note

In the 4th scenario the motor is not reliably started.

Parameterization of the brake ramp without encoder

p9581/p9381 and p9583/p9383 are used to set the steepness of the brake ramp. Parameters p9581/p9381 define the reference velocity, parameters p9583/p9383 the ramp-down time from the reference velocity down to a value of 0. Parameters p9582/p9382 are used to set the time, which after changing over to a lower SLS velocity stage, elapses until the braking ramp monitoring becomes effective.

8.5.6.3 Safely Limited Speed - Parameter

Overview of important parameters (see SINAMICS S110 List Manual)

- p9301.0 SI Motion enable safety functions (CPU 2)
- p9306 SI Motion function specification (CPU 2)
- p9331[0...3] SI Motion SLS limits (CPU 2)
- p9351 SI Motion SLS changeover delay time (CPU 2)
- p9381 SI Motion brake ramp reference value (CPU 2)
- p9382 SI Motion brake ramp delay time (CPU 2)
- p9383 SI Motion brake ramp monitoring time (CPU 2)
- p9501.0 SI Motion enable safety functions (CPU 1)
- p9506 SI Motion function specification (CPU 1)
- p9531[0...3] SI Motion SLS (SG) limits (CPU 1)
- p9551 SI Motion SLS(SG) changeover delay time (CPU 1)
- p9581 SI Motion brake ramp reference value (CPU 1)
- p9582 SI Motion brake ramp delay time (CPU 1)
- p9583 SI Motion brake ramp monitoring time (CPU 1)
- p9601 SI enable, functions integrated in the drive (processor 1)
- r9714[0...1] SI Motion diagnostics speed
- r9720.0...10 CO/BO: SI Motion drive-integrated control signals
- r9721.0...15 CO/BO: SI motion, status signals
- r9722.0...15 CO/BO: SI Motion drive-integrated status signals
- p9801 SI enable, functions integrated in the drive (processor 2)

8.5.6.4 EPOS and Safely-Limited Speed

If safe speed monitoring (SLS) is also to be used at the same time as the EPOS positioning function , EPOS must be informed of the activated speed monitoring limit. Otherwise the speed monitoring limit can be violated by the EPOS setpoint input. Through the SLS monitoring, this violation leads to the drive being stopped and so abandoning the planned movement sequences. Here the relevant safety faults are output first of all and only then the sequential faults created by EPOS.

With its parameter r9733, the SLS function provides a setpoint limit value which, when taken into account, prevents the SLS limit value from being violated.

This means that the setpoint limit value in r9733 must therefore be transferred to the input for the maximum setpoint speed/velocity of EPOS (p2594), to prevent an SLS limit value violation as a result of the EPOS setpoint input. You need to set the delay time for SLS/SOS (p9551/p9351) so that the SLS only becomes active after the maximum required time for the speed to be reduced below the SLS limit. This required braking time is determined by the current speed, the jerk limit in p2574 and the maximum delay in p2573.

Overview of important parameters (see SINAMICS S110 List Manual)

- p2573 EPOS maximum deceleration
- p2574 EPOS jerk limitation
- p2593 CI: EPOS LU/revolution LU/mm
- p2594 CI: EPOS maximum speed externally limited
- p9351 SI Motion SLS changeover delay time (CPU 2)
- p9551 SI Motion SLS changeover delay time (CPU 1)
- r9733(0,1) CO: SI Motion speed setpoint limit active

8.5.7 Safe Speed Monitor (SSM)

8.5.7.1 Safe Speed Monitor with encoder

General description

The "Safe Speed Monitor" (SSM) function provides a reliable method for detecting when a speed limit has been undershot (p9346/p9546) in both directions of rotation, e.g. for zero speed detection. A fail-safe output signal is available for further processing.

The function is activated automatically as soon as the Safety Integrated Extended Functions are enabled with parameters p9301.0 = p9501.0 = 1 and p9346/p9546 > 0. SSM is deactivated if p9346/p9546 = 0.

NOTICE

If 0 is entered for p9368/p9568, the speed limit of the SSM function (p9346/p9546) is simultaneously the shutdown limit for the safe acceleration monitoring function (SAM).

In this case, the effects of safe acceleration monitoring are therefore restricted if a relatively high SSM/SAM speed limit is set when using the SS1 and SS2 stop functions.

⚠ WARNING

A STOP F is indicated by Safety message C01711/C30711. STOP F only results in the follow-up response STOP B / STOP A if one of the Safety functions is active. If only the SSM function is active, a STOP F cross-checking error does not result in a STOP B / STOP A follow-up response.

SSM is only valid as an active monitoring function if p9301.0 = p9501.0 ≠ 0 and p9346 = p9546 ≠ 0 and "Hysteresis and filtering" is parameterized (p9301.16 = p9501.16 = 1).

If "Hysteresis and filtering" is not parameterized (p9301.16 = p9501.16 = 0), SSM is not valid as an active monitoring function, but instead has only an informative character.

Functional features of "Safe Speed Monitor" with encoder

The parameter p9346/p9546 "SI Motion SSM (SGA n < nx) speed limit n_x" is used to set the speed limit. The abbreviation "SGA n < nx" indicates the safety function required for determining an output signal when a parameterizable velocity limit has been undershot.

If the speed limit for the "Safe Speed Monitor" feedback signal (n < n_x) is undershot, the signal "Safe Speed Monitor feedback signal active" (SGA n < n_x) is set. When the set threshold value has been undershot, the "Safe Acceleration Monitor" (SAM) function is also deactivated (see p9368/p9568). If p9368 = p9568 = 0, then p9346/p9546 (SSM feedback signal) is also used as a trip threshold for the SAM monitoring.

The hysteresis for the SSM output signal is set in parameter p9347/p9547 "SI Motion SSM Speed Hysteresis n_x". The SSM output signal can either take the state "1" or "0" – depending on from which direction the belt is reached.

If the maximum permissible speed tolerance is exceeded (i.e. one channel displays a speed less than p9546 - p9547, while the other channel displays a speed greater than p9546), a STOP F is issued. Parameters p9347/p9547 are used to define the maximum tolerance of the speed actual values between the two channels.

The output signal for SSM is smoothed by setting a filter time with a PT1 filter (p9345/p9545).

During safe motion monitoring, the hysteresis and filtering functions can be activated or deactivated jointly using the enable bit p9301.16/p9501.16. In the default setting, the functions are deactivated (p9301.16/p9501.16 = 0).

NOTICE
Exception If the "hysteresis and filtering" function is enabled, the SSM function is evaluated as an active monitoring function and, after a STOP F, also results in a follow-up response STOP B/STOP A.

The following diagram shows the characteristic of the safe output signal SSM when the hysteresis is active:

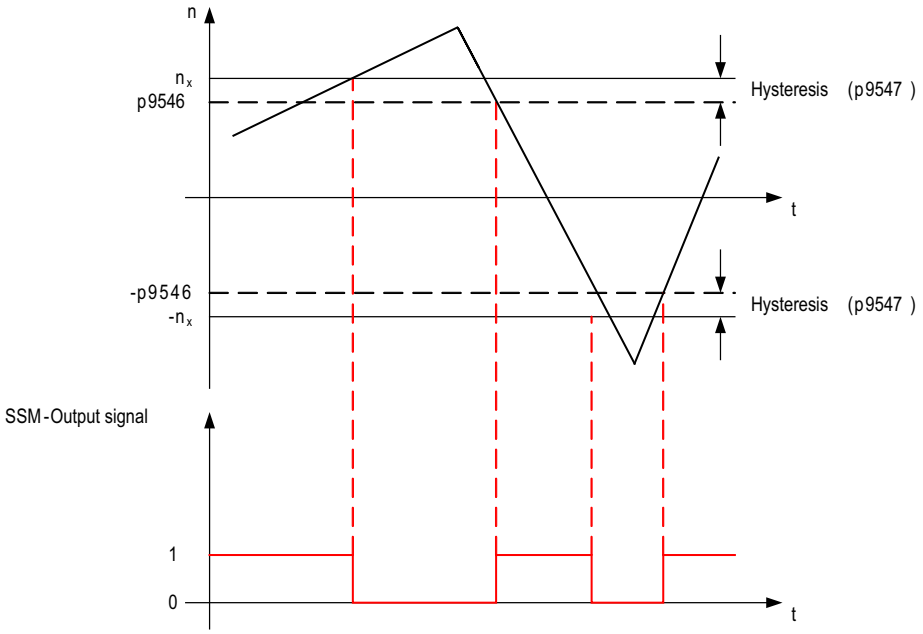

Figure 8-9 Safe output signal for SSM with hysteresis

Note

When "hysteresis and filtering" is activated with output signal SSM, a time-delayed SSM feedback signal occurs for the axes. This is a characteristic of the filter.

Features

- Safe monitoring of the speed limit specified in p9346 and p9546
- Parameterizable hysteresis via p9347 and p9547
- Variable PT1 filter via p9345 and p9545
- Fail-safe output signal
- No stop response

8.5.7.2 Safe Speed Monitor without encoder

Function

Set p9306 = p9506 = 1 or p9306 = p9506 = 3 (factory setting = 0) to activate Safety Integrated functions without encoder. You can also make this setting by selecting "Without encoder" on the Safety screen in STARTER.

Without an encoder, the "Safe Speed Monitor" essentially functions exactly the same as described in the previous section under "Safe Speed Monitor with encoder".

Differences between Safe Speed Monitor with and without encoder

- For Safe Speed Monitor without encoder, after pulse suppression the drive is unable to determine the current speed. Two responses can be selected for this operating state with parameters p9309.0/p9509.0:
  - p9309.0 = p9509.0 = 1

    The status signal (SSM feedback signal) displays "inactive" (factory setting).
  - p9309.0/p9509.0 = 0

    The status signal (SSM feedback signal) is frozen. "Safe Torque Off" (STO) is selected internally.
- Due to the less precise speed identification, "Safe Speed Monitor without encoder" requires a higher hysteresis (p9347/p9547) and, where applicable, a filter time (p9345/p9545) compared with the function with encoder.

Sequence diagram

The diagram below shows the signal profile for the case p9309.0/p9509.0 = 0.

The speed remains below the limits of p9346/p9546 throughout the entire observation period. This is the reason that the SSM feedback signal r9722.15 = 1. The motor speed drops after the command to suppress pulses. The internal STO is set when the speed drops below the zero speed detection level.

The SSM monitoring remains active. The motor speed continues to be below the speed limit p9346/p9546. The SSM feedback signal remains as 1, i.e. it is frozen.

To restart the motor safely, the STO must be selected manually and deselected once more. After the STO has been deselected, a 5 second time window is opened. If the pulse enable takes place within this time window, the motor starts. If the pulse enable does not take place within this 5 second time window, the internal STO becomes active once more.

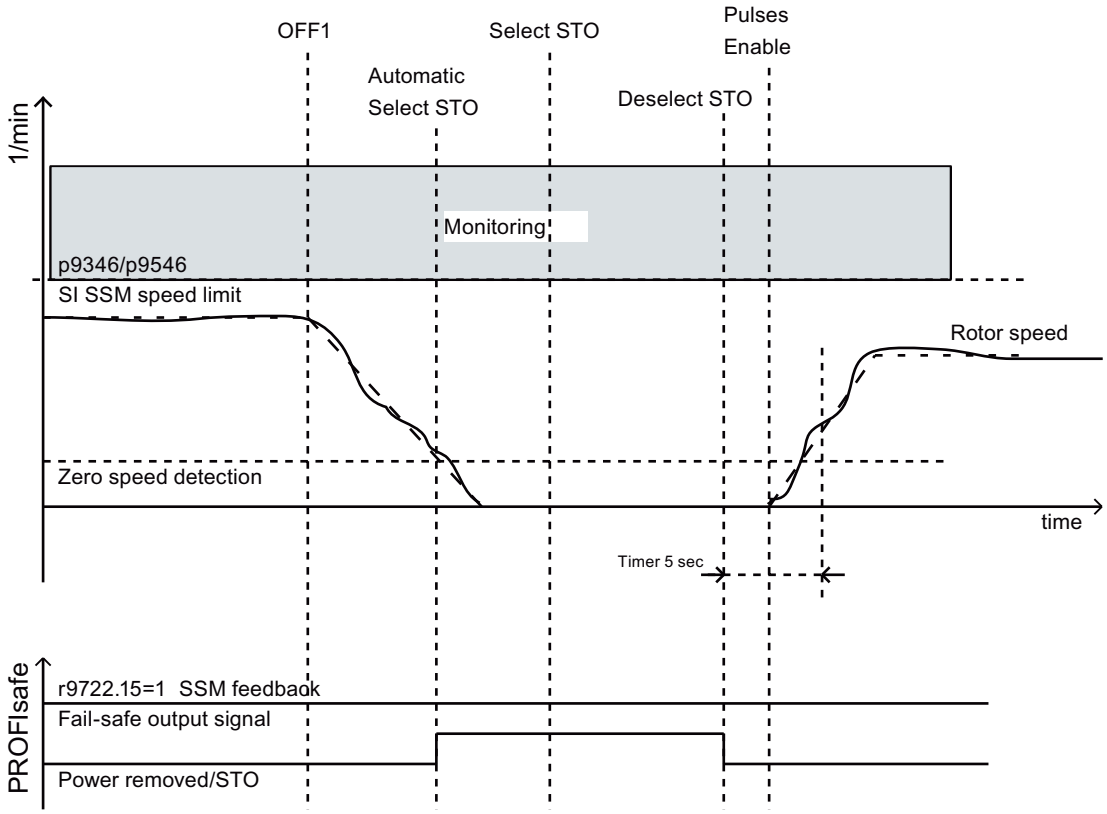

Figure 8-10 Safe Speed Monitor without encoder (p9309.0 = p9509.0 = 0)

If p9309.0 = p9509.0 = 1, the SSM monitoring is ended after the pulse suppression. The feedback signal p9722.15 drops to 0. The SSM monitoring is only reactivated after the pulses have been re-enabled.

8.5.7.3 Safe Speed Monitor restart

Restart after pulse suppression for p9309/p9509 = 0

If the drive pulses have been suppressed using OFF1/OFF2/STO, the following steps must be carried out for a restart:

1st scenario:

- State after power-on:
  - SSM selected,
  - STO selected,
  - Pulse suppression active
- Deselect STO.
- A drive enable via a positive edge at OFF1 must occur within 5 seconds after deselection of the STO, otherwise the drive will drop back into the STO state.

2nd scenario

- Situation:
  - SSM selected
  - Motor turning
  - OFF1 triggered, pulses are suppressed
- Select STO
- Deselect STO.

  STO activated internally via pulse suppression: This activation must be undone by selection/deselection.
- A drive enable via a positive edge at OFF1 must occur within 5 seconds after deselection of the STO, otherwise the drive will drop back into the STO state.

8.5.7.4 Overview of important parameters

Overview of important parameters (see SINAMICS S110 List Manual)

- p9301 SI Motion enable safety functions (CPU 2)
- p9501 SI Motion enable safety functions (CPU 1)
- p9306 SI Motion function specification (CPU 2)
- p9506 SI Motion function specification (CPU 1)
- p9309 SI Motion behavior during pulse suppression (CPU 2)
- p9509 SI Motion behavior during pulse suppression (CPU 1)
- p9345 SI Motion SSM (SGA n < nx) filter time (CPU 2)
- p9545 SI Motion SSM (SGA n < nx) filter time (CPU 1)
- p9346 SI Motion SSM speed limit (CPU 2)
- p9546 SI Motion SSM speed limit (CPU 1)
- p9347 SI Motion speed hysteresis (crosswise) (CPU 2)
- p9547 SI Motion speed hysteresis (crosswise) (CPU 1)
- r9722.0...15 CO/BO: SI Motion drive-integrated status signals
- p10042 SI F-DO 0 signal sources

8.5.8 Safe Acceleration Monitor (SAM)

Safe Acceleration Monitor with encoder

The "Safe Acceleration Monitor" (SAM) function is used for safe monitoring of drive acceleration. This function is part of the SS1 (time and acceleration controlled) and SS2 (or STOP B and STOP C) Safety functions.

Note

For reasons of clarity, the abbreviation for this function has been changed from "SBR" to "SAM" This change has no impact on the functionality.

Functional features

A STOP A is generated if any drive acceleration within the ramp-down phase exceeds the tolerance defined in p9348/p9548. The monitoring function is activated after SS1 (or STOP B) and SS2 (or STOP C) are set and is deactivated after the speed drops below the value set in p9346/p9546.

NOTICE

If 0 is entered for p9368/p9568, the speed limit of the SSM function (p9346/p9546) is also used as shutdown limit for the SAM function (safe acceleration monitoring). The SAM is deactivated if the speed is below this limit.

This means the effects of safe acceleration monitoring are greatly restricted if a relatively high SSM/SAM speed limit is set when using the SS1 and SS2 stop functions.

Note

SAM is part of the Safety Integrated Extended Functions SS1 and SS2. SAM cannot be activated individually.

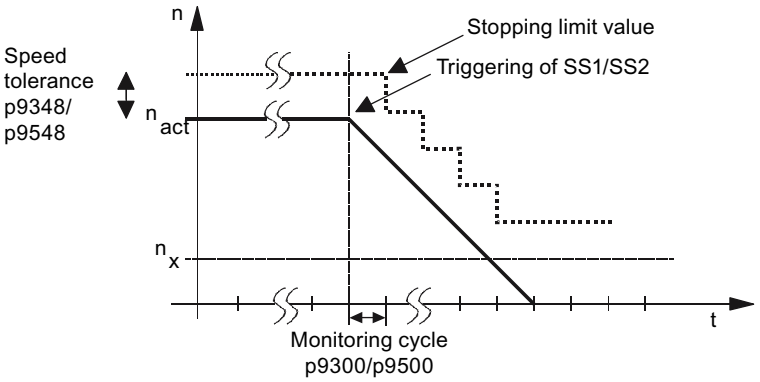

Figure 8-11 Characteristics of the shutdown limit for SAM

Calculating SAM tolerance of the actual speed

- The following rules are valid for the parameterization of the SAM tolerance:
  - The maximum speed increase after SS1 / SS2 is triggered is derived from the effective acceleration (a) and the duration of the acceleration phase.
  - The duration of the acceleration phase is equivalent to one monitoring clock cycle (p9300/p9500) MC (delay from detecting an SS1 / SS2 until n_{set} = 0):
- SAM tolerance

  Actual speed SAM = acceleration * acceleration duration

  The following setup rule is derived thereof:
  - For linear axes:
    SAM tolerance [mm/min] = a [m/s^2] * MC [s] * 1000 [mm/m] * 60 [s/min]
  - For rotary axes:
    SAM tolerance [rpm] = a [rev/s^2] * MC [s] * 60 [s/min]
- Recommendation:
  The SAM tolerance value entered should be approx. 20% higher than the calculated value.

Responses

Speed limit violated (SAM):

- STOP A
- Safety message C01706/C30706

System errors:

- STOP F with subsequent STOP A
- Safety message C01711/C30711

Features

- Element of the SS1 (time and acceleration controlled) and SS2 functions
- Parameterizable minimum shutdown speed to be monitored (p9368/p9568)

Overview of important parameters (see SINAMICS S110 List Manual)

- p9346 SI Motion speed limit n_x (CPU 2)
- p9546 SI Motion speed limit n_x (CPU 1)
- p9348 SI Motion SAM actual speed tolerance (CPU 2)
- p9548 SI Motion SAM actual speed tolerance (CPU 1)
- p9368 SI Motion SAM speed limit (CPU 2)
- p9568 SI Motion SAM speed limit (CPU 1)

8.5.9 Safe Brake Ramp (SBR)

The Safe Brake Ramp (SBR) function provides a safe method for monitoring the brake ramp. The Safe Brake Ramp function is used to monitor braking when using the "SS1 without encoder" and "SLS without encoder" functions.

Features

The motor is immediately decelerated along the OFF3 ramp as soon as SS1 or SLS is triggered (if setpoint speed limitation is used). Monitoring of the brake ramp is activated once the delay time in p9582/p9382 has elapsed. Monitoring ensures that the motor does not exceed the set brake ramp (SBR) when braking. Deactivation of the safe monitoring of the brake ramp occurs

- for SS1:

  as soon as the speed drops below the shutdown speed (p9560/p9360).

- for SLS:
  - as soon as the set brake ramp has reached the new SLS level

    or

  - as soon as the actual speed has fallen below the newly selected SLS level and has remained there for the time parameterized in p9582/p9382.

Additional specific functions (e.g. STO, new SLS speed limit, etc.) are activated at this point, depending on the Safety Integrated function used.

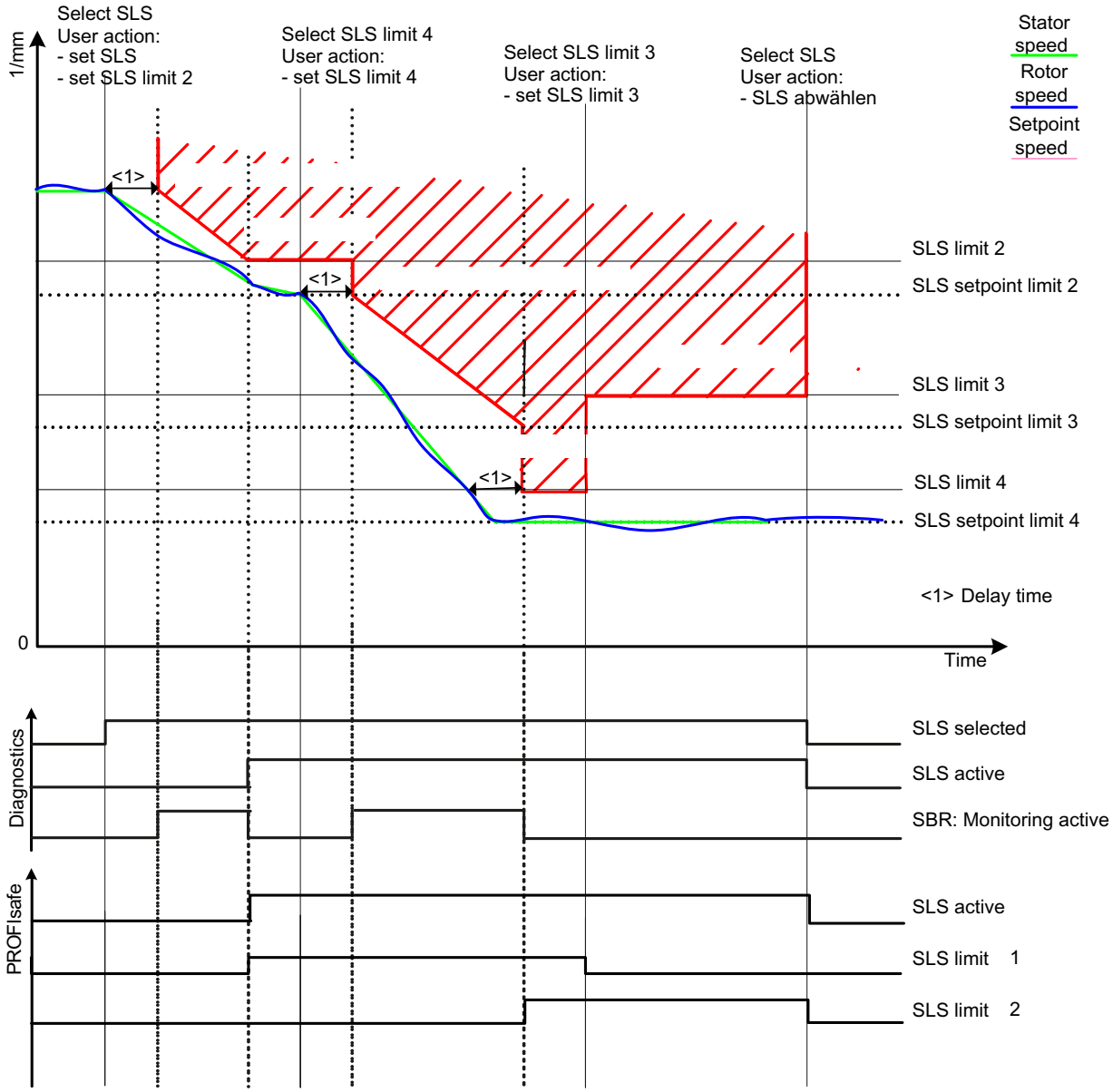

Figure 8-12 Safe Brake Ramp without encoder (for SLS)

Parameterization of the brake ramp

p9581/p9381 (SI Motion brake ramp reference value, Control Unit/Motor Module) and p9583/p9383 (SI Motion brake ramp monitoring time, Control Unit/Motor Module) are used to set the steepness of the brake ramp. Parameters p9581/p9381 determine the reference speed and parameters p9583/p9383 define the ramp-down time. Parameters p9582/p9382 are used to set the time which passes after the triggering of SS1, selection of SLS or SLS level changeover and the start of brake ramp monitoring.

Responses to brake ramp violations (SBR)

- Safety messages C01706 and C30706 (SI Motion: SAM/SBR limit exceeded)
- Drive stopped with STOP A

Features

- Part of the "SS1 without encoder" and "SLS without encoder" functions.
- Parameterizable safe brake ramp

Overview of important parameters (see SINAMICS S110 List Manual)

- p9360 SI Motion pulse suppression shutdown speed (CPU 2)
- p9560 SI Motion pulse suppression shutdown speed (CPU 1)
- p9381 SI Motion brake ramp reference value (CPU 2)
- p9581 SI Motion brake ramp reference value (CPU 1)
- p9382 SI Motion brake ramp delay time (CPU 2)
- p9582 SI Motion brake ramp delay time (CPU 1)
- p9383 SI Motion brake ramp monitoring time (CPU 2)
- p9583 SI Motion brake ramp monitoring time (CPU 1)

8.5.10 Safe Direction (SDI)

8.5.10.1 Safe Direction with encoder

The Safe Direction function (SDI) allows reliable monitoring of the direction of motion of the drive. If this function is activated, the drive can only move in the enabled, safe direction.

Functional principle

After SDI has been selected via terminals or PROFIsafe, the delay time p9365/p9565 is started. During this period, you have the option of ensuring that the drive is moving in the enabled (safe) direction. After this, the Safe Direction function is active and the direction of motion is monitored. If the drive now moves in the non-safe direction, messages C01716/C30716 are output and the stop response defined in p9366/p9566 is initiated.

Features

- Parameters r9720.12/r9720.13 display whether the SDI function is selected.
- Parameters rr9722.12/r9722.13 display whether the SDI function is active.
- Parameters p9364/p9564 are used to set the tolerance within which a movement in a non-enabled (non-safe) direction is tolerated.
- Parameters p9366/p9566 define the stop response in the case of a fault.
- Parameters p10030/p10130 define the terminals for SDI.
- Parameter p10042 is used to define whether the SDI status in the status display of the F-DO is taken into account.
- If "SDI positive" is selected, the following value is set automatically:
  – r9733[1] = 0 (setpoint limitation negative)
- If "SDI "negative" is selected, the following value is set automatically:
  – r9733[0] = 0 (setpoint limitation positive)
- The absolute setpoint speed limit is available in r9733[2].

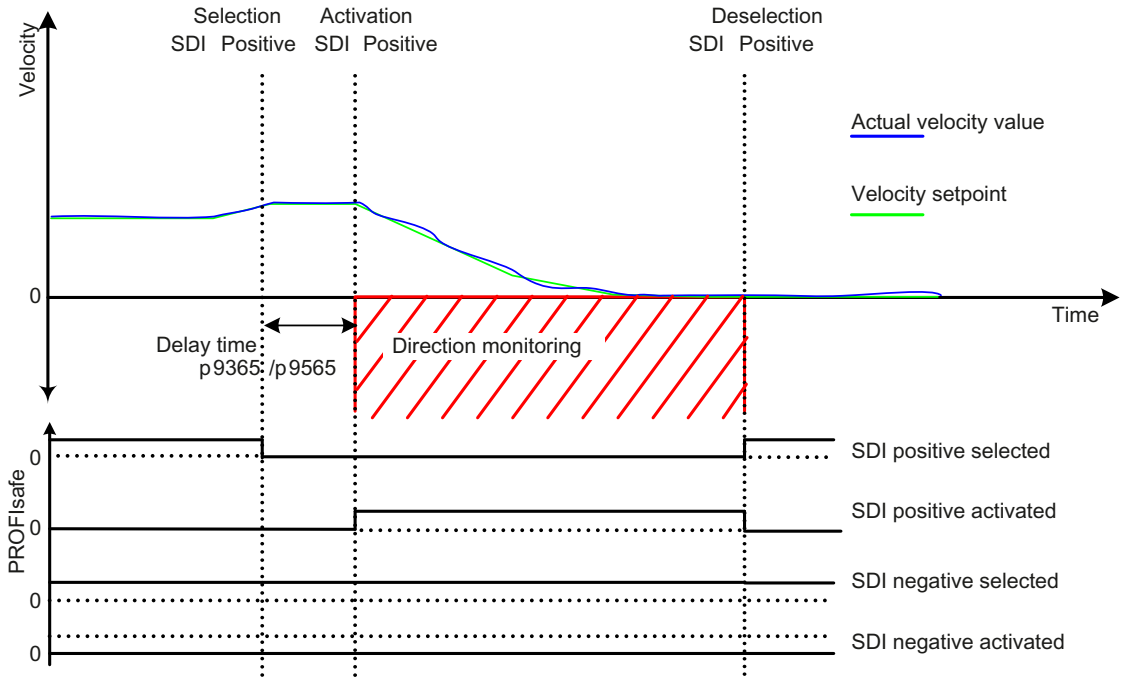

Figure 8-13 Functional principle SDI with encoder

Enabling the Safe Direction function

The "Safe Direction" function is enabled via the following parameters:

- p9501.17 = 1, p9301.17 = 1

8.5.10.2 Safe Direction without encoder

Function

Set p9306 = p9506 = 1 or p9506 = p9306 = 3 (factory setting = 0) to activate Safety Integrated functions without encoder. You can also make this setting by selecting "Without encoder" on the STARTER safety screen.

Differences between Safe Direction with encoder and Safe Direction without encoder

- For Safe Direction without encoder, after pulse suppression the drive is unable to determine the current speed. For this operating state, the behavior is defined with the parameters p9309.8/p9509.8:
  - p9309.8 = p9509.8 = 1

    The status signal displays "inactive".
  - p9309.8 = p9509.8 = 0

    The status signal displays "active", and the drive takes on the state STO.
- Due to the less precise position recognition, "Safe Direction without encoder" requires a larger tolerance (p9364/p9564) compared with the function with encoder.

Note

A change in the direction of rotation using parameter p1821 is not recognized by "SDI without encoder". For this reason, the limitation of SDI from r9733 no longer functions.

Restart after pulse suppression

If the drive has been switched off via OFF2/STO, the following steps need to be carried out before a restart can be performed:

1st scenario:

- State after power-on: SDI selected, STO selected, OFF2 active
- Deselect STO.
- The drive enable must be given within 5 seconds via a positive edge at OFF1, otherwise STO is reactivated.

2nd scenario

- Situation: Run until standstill with SDI selected, then OFF2 activated
- Select STO
- Deselect STO.

  STO activated internally via OFF2: This activation must be undone by selection/deselection.
- The drive enable must be given within 5 seconds via a positive edge at OFF1, otherwise STO is reactivated.

3rd scenario

- Situation: Run until standstill with SDI selected, then OFF2 activated
- Deselect SDI
- Select SDI

  STO activated internally via OFF2: This activation must be undone by deselecting SDI.
- After this the drive enable must be given by a positive edge at OFF1.

4th scenario

- Situation: All Safety Integrated functions are deselected
- After this the drive enable must be given by a positive edge at OFF1.

Note

In the 4th scenario the motor is not reliably started.

8.5.10.3 Overview of parameters and function diagrams

Function diagrams (see SINAMICS S110 List Manual)

- 2840 – Extended Functions, control word and status word
- 2855 – Extended Functions, control interface
- 2856 – Extended Functions, safe state selection
- 2857 – Extended Functions, assignment (F-DO 0)

Overview of important parameters (see SINAMICS S110 List Manual)

- p1821[0...n] Direction of rotation
- p9301.17 SI Motion enable safety functions (CPU 2): SDI enable
- p9306 SI Motion function specification (CPU 2)
- p9309 SI Motion behavior during pulse suppression (CPU 2)
- p9364 SI Motion SDI tolerance (CPU 2)
- p9365 SI Motion SDI delay time (CPU 2)
- p9366 SI Motion SDI stop response (CPU 2)
- p9501 SI Motion enable safety functions (CPU 1): SDI enable
- p9506 SI Motion function specification (CPU 1)
- p9509 SI Motion behavior during pulse suppression (CPU 1)
- p9564 SI Motion SDI tolerance (CPU 1)
- p9565 SI Motion SDI delay time (CPU 1)
- p9566 SI Motion SDI stop response (CPU 1)
- r9720 CO/BO: SI Motion drive-integrated control signals
- r9722 CO/BO: SI Motion drive-integrated status signals
- r9733[0...2] CO: SI Motion speed setpoint limit active
- p10002 SI discrepancy monitoring time
- p10017 SI digital inputs, debounce time
- p10030[0...3] SI SDI positive input terminal
- p10031[0...3] SI SDI negative input terminal
- p10039[0...3] SI Safe State signal selection
- p10042[0...5] SI F-DO 0 signal sources
- p10102 SI discrepancy monitoring time (CPU 2)
- p10117 SI digital input debounce time (CPU 2)
- p10130 SI SDI positive input terminal (CPU 2)
- p10131 SI SDI negative input terminal (CPU 2)
- p10139 SI Safe State signal selection (CPU 2)
- p10142[0...5] SI F-DO 0 signal sources (CPU 2)

8.5.11 Safety faults

Stop responses

Faults with Safety Integrated Extended Functions and violation of limits can trigger the following stop response:

Table 8- 11 Stop response overview

Stop response	Triggered ...	Action	Effect
STOP A	For all acknowledgeable safety faults with pulse suppression. As a follow-up reaction of STOP F.	Immediate pulse suppression	Drive coasts down
STOP B	Examples: - Standstill tolerance violated in p9330/p9530 (SOS). - Configured subsequent stop p9363/p9563 for SLS/SDI. - When the SS2 function is active STOP F results in follow-up stop B.	Immediate input of speed setpoint = 0 and start of timer t_B STOP A is triggered on expiration of t_B or if $n_{act} < n_{shutdown}$.	The drive brakes down along the OFF3 ramp and then goes into STOP A state
STOP C	Configured subsequent stop p9363/p9563 with SLS/SDI. When SLS is selected, the drive is decelerated with STOP C.	Immediate input of speed setpoint = 0 and start of timer t_C SOS is activated on expiration of t_C.	The drive brakes down along the OFF3 ramp, SOS is then activated
STOP D	Configured subsequent stop p9363/p9563 with SLS/SDI.	Timer t_D starts No drive-integrated response SOS is activated on expiration of t_D.	The drive must be decelerated by the higher-level control (within the drive group)! SOS is activated on expiration of the time t_D. An automatic response is only triggered if the standstill tolerance window is violated in SOS.
STOP E	- Configured subsequent stop p9563/p9363 for SLS - Configured subsequent stop p9566/p9366 for SDI	SOS triggered after the expiration of p9554/p9354	Controlling the drive-integrated ESR functionality
STOP F	If a fault occurs in the crosswise data comparison. Follow-up response STOP B.	Timer t_{F1} (Basic Functions) or t_{F2} (Extended Functions) No drive response	If a safety function (SOS, SLS) has been selected or if SSM with hysteresis has been enabled, transition to STOP A after t_{F1} (Basic Functions) has elapsed or STOP B after t_{F2} (Extended Functions) has elapsed.

Note

A delay time between STOP F and STOP B should only be set if an additional response is initiated during this time when the "Internal Event" (r9722.7) message signal is evaluated.

A monitoring function should also always be active even in automatic mode (e.g. SLS with a high limit speed) when the delay time is used.

An activated hysteresis for SSM should be regarded as an activated monitoring function.

On delays at the stop response transitions

- t_B: p9356/p9556
- t_C: p9352/p9552
- t_D: p9353/p9553
- t_{F1}: p9658/p9858
- t_{F2}: p9355/p9555
- $n_{shutdown}$: p9360/p9560

Stop response priorities

Table 8- 12 Stop response priorities

Priority classes	Stop response
Highest priority	STOP A
.....	STOP B
...	STOP C
..	STOP D
..	STOP E
Lowest priority	STOP F

Priorities of stop responses and Extended Functions

Table 8- 13 Priorities of stop responses and Extended Functions

Stop response / Extended Function		Highest priority	...	...	...	...	Lowest priority
		STOP A	**STOP B**	**STOP C**	**STOP D**	**STOP E**	**STOP F**
Highest priority	**STO**	STOP A / STO	STO	STO	STO	STO	STO
.....	**SS1**	STOP A	STOP B / SS1	SS1	SS1	SS1	SS1
...	**SS2**	STOP A	STOP B	STOP C / SS2	SS2	SS2	SS2 / STOP B[2)]
..	**SOS**	STOP A[1)]	STOP B[1)]	SOS	SOS	SOS	STOP B[2)]
Lowest priority	**SLS**	STOP A[3)]	STOP B[3)]	STOP C[4)]	STOP D[4)]	STOP E	STOP B[2)]

1) The SOS monitoring function remains active, although the fault response in the event of a fault can no longer be triggered because it is already present.

2) STOP B is the subsequent stop of STOP F, which is activated after a parameterizable time. STOP F alone does not have any effect; the active safety function is still present.

3) The SLS monitoring function remains active, although the fault response in the event of a fault can no longer be triggered because it is already present.

4) SLS remains active during the braking phase, after which the system switches to SOS.

The table above specifies which stop response / safety function is set when a STOP is triggered with a safety function active. The STOPs are arranged here from left to right in descending order of priority (STOP A-D, F).

No overall priority is assigned in the individual safety functions. SOS remains active, for example, even if STO is requested. The safety functions that cause the drive to decelerate (STO, SS1, SS2) are specified from top to bottom in descending order of priority.

If a field contains two entries, the stop responses and safety functions have the same priority. Explanation:

- STOP A corresponds to STO
- STOP B corresponds to SS1
- STOP C corresponds to SS2
- When the SS2 function is active, STOP F results in follow-up stop B. SS2 remains active.

Examples for illustrating the information in the table:

1. Safety function SS1 has just been selected. STOP A remains active; a STOP B operation that is currently in progress is not interrupted by this. The remaining STOP functions (STOPs C to F) are replaced by SS1.
2. The SLS safety function is selected. This selection does not modify the function of STOP A-D. STOP F now triggers a STOP B because a safety function has been activated.
3. Stop response, STOP C is selected. If the STO or SS1 safety functions are active, this does not have any effect. If SS2 is active, this braking ramp is retained. If SOS is active, SOS remains effective, which is also the end status of STOP C. When SLS is selected, the drive is decelerated with STOP C.

Acknowledging the safety faults

NOTICE
Safety faults can also be acknowledged (as with all other faults) by switching the drive unit off and then on again (POWER ON). If this action has not eliminated the fault cause, the fault is displayed again immediately after power up.

Acknowledgment via PROFIsafe

The higher-level controller sets the signal "Internal Event ACK" via the PROFIsafe telegram (STW bit 7). A falling edge in this signal resets the status "Internal Event" and so acknowledges the fault.

Acknowledgment via F-DI

If the signal "Internal Event ACK" is connected with an F-DI, a falling edge in this signal resets the status "Internal Event" and so acknowledges the fault. For safety reasons, the external signal on the F-DI with the "Internal Event ACK" function must not be set continuously to the "1" level; for acknowledgment, it must first be set from the idle state "0" to "1" and then back to "0" again.

Extended acknowledgment

If STO is selected/deselected (and p9307.0/p9507.0 = 1 are set), safety messages, in addition to fault messages, are also canceled automatically.

Description of faults and alarms

Note

The faults and alarms for SINAMICS Safety Integrated are described in the following documentation:

References: SINAMICS S110 List Manual

8.5.12 Message buffer

In addition to the fault buffer for F... faults and the alarm buffer for A... alarms, a special message buffer for C... safety messages is available for Safety Extended Functions.

The fault messages for the Safety Basic Functions are stored in the standard fault buffer (see "Buffer for faults and alarms").

Note

Set parameter p3117 = 1 if you need to save both the Basic Functions messages and the Extended Functions messages in the standard fault buffer.

The message buffer for safety messages is similar to the fault buffer for fault messages. The message buffer comprises the message code, message value, and message time (received, resolved), the component number for identifying the affected SINAMICS component and diagnostics attributes. The following diagram shows how the message buffer is structured:

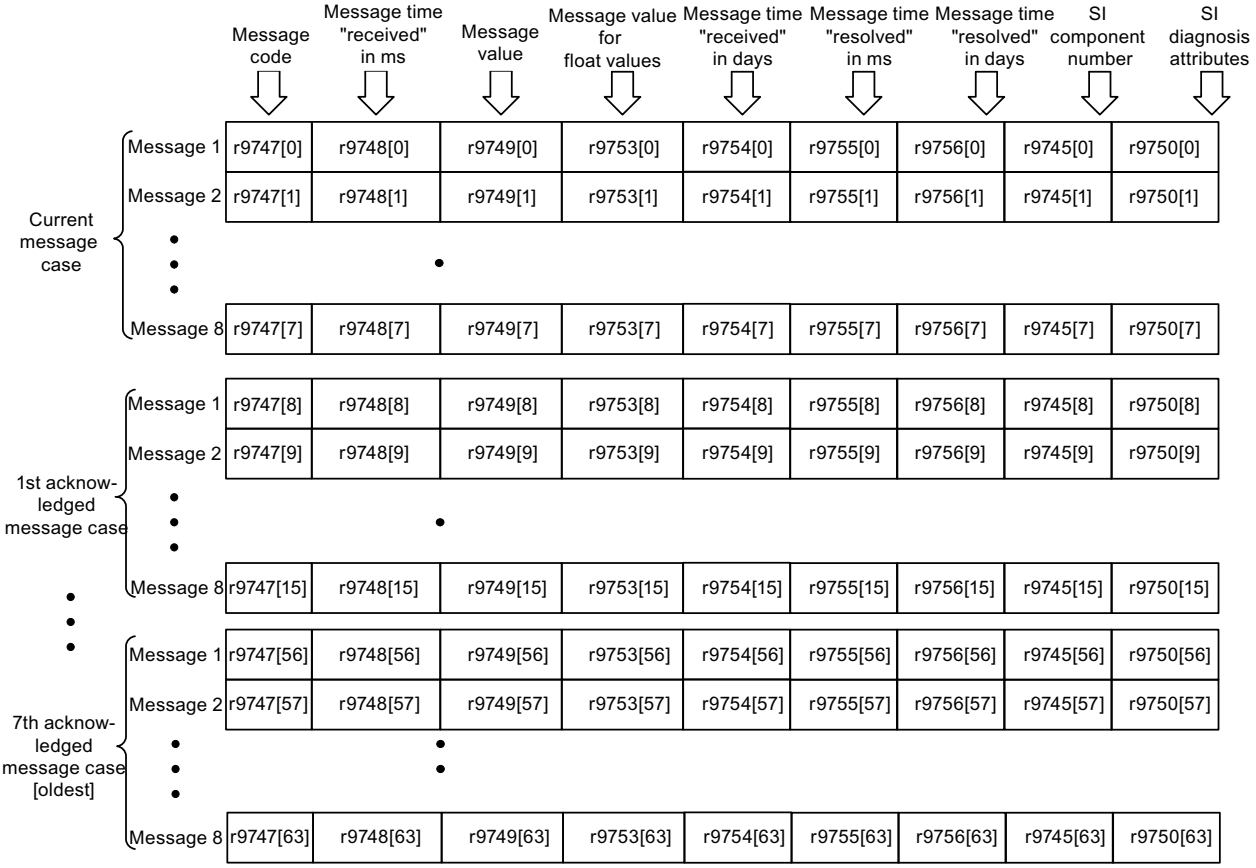

Figure 8-14 Structure of the message buffer

When a safety message is present, the bit 2139.5 = 1 ("Safety message present") is set. The entry in the message buffer is delayed. For this reason, the message buffer should not be read until a change in the buffer (r9744) has been detected after "Safety message present" is output.

The messages must be acknowledged via the failsafe inputs F-DI or via PROFIsafe.

Properties of the message buffer:

- A new message case comprises one or more messages and is entered in the "Current message case".
- The entries appear in the buffer according to the time at which they occurred.
- If a new message case occurs, the message buffer is reorganized accordingly. The history is recorded in the data records "Acknowledged message case" 1 to 7.
- If the cause of at least one message in "Current message case" is rectified and acknowledged, the message buffer is reorganized accordingly. Messages that have not been rectified remain in "Current message case".
- If "Current message case" contains 8 messages and a new message for the current message case is output, the message in the current message case parameters is overwritten with the new message in index 7.
- r9744 is incremented each time the message buffer changes.
- A message value (r9749, r9753) can be output for a message. The message value is used to diagnose the message more accurately (refer to the message description for more details).

Deleting the message buffer:

The message buffer can be deleted as follows: p9752 = 0.
Parameter p9752 (SI message cases, counter) is also reset to 0 during POWER ON.

Overview of important parameters (see SINAMICS S110 List Manual)

- r2139.0...8 CO/BO: Status word, faults/alarms 1
- r9744 SI message buffer changes, counter
- r9745[0...63] SI component number
- r9750[0...63] SI diagnostic attributes
- p9752 SI message cases, counter
- r9747[0...63] SI message code
- r9748[0...63] SI message time received in milliseconds
- r9749[0...63] SI message value
- r9753[0...63] SI message value for float values
- r9754[0...63] SI message time received in days
- r9755[0...63] SI message time removed in milliseconds
- r9756[0...63] SI message time removed in days

8.5.13 Safe actual value acquisition

8.5.13.1 Reliable actual value acquisition with the encoder system

Supported encoder systems

The Safety Functions used to monitor motion (e.g. SS1, SS2, SOS, SLS and SSM) require reliable actual value acquisition.

For safe speed/position sensing for SINAMICS S110, only a single-encoder system may be used.

Single-encoder system

Encoders within single-encoder systems are used to generate the failsafe actual values of the drive. This motor encoder must be appropriately qualified (see encoder types). The safety-relevant actual values are generated either directly in the encoder or in the Sensor Module and are transferred to the Control Unit by way of failsafe communication via DRIVE-CLiQ.

For motors without a DRIVE-CLiQ interface, the connection is established by means of additional Sensor Modules (SMC or SME).

NOTICE
When specifying the standstill tolerance window, you must remember that fail-safe position monitoring can take place with a maximum of the precision displayed in r9731.

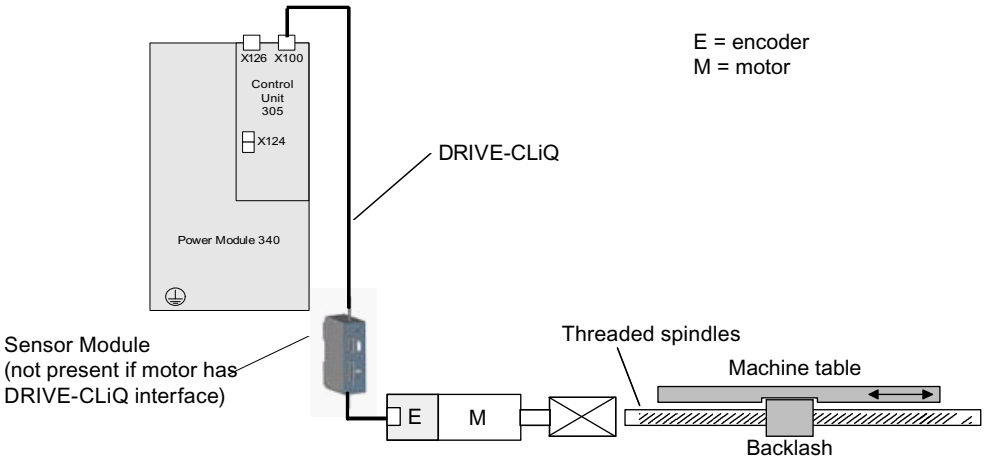

Figure 8-15 Example of a single-encoder system

Encoder types for a single-encoder system

In systems with encoders with SINAMICS Safety Integrated, for safe actual value acquisition only encoders with sin/cos 1 Vpp signals are permitted at the SINAMICS Sensor Modules SME20/25 and SMC20, which fulfill the following conditions:

1. The encoders must contain purely analog signal processing and creation. This is necessary to be able to prevent the A/B track signals with valid levels from becoming static ("freezing").
2. A failure modes and effects analysis (FMEA) must be carried out for the fixation of the encoder onto the motor shaft. The result should incorporate exclusion of the failure "Loosening of encoder fixation so that encoder no longer reports movement correctly" (see IEC 61800-5-2, 2008, Table D.16).

It should be noted that the machine manufacturer has sole responsibility for the fulfillment of the above-described requirements. Information on the internal realization of the encoder must come from the encoder manufacturer. The FMEA must be created by the machine manufacturer.

Certain Siemens motors with and without DRIVE-CLiQ connection can also be used for Safety Integrated functions, see:

http://support.automation.siemens.com/WW/view/de/33512621

For these motors, the fault listed under 2. cannot occur.

NOTICE
Basic absolute encoders (e.g. ECI, EQI) that offer an EnDat interface with additional sin/cos tracks, but operate according to an inductive measuring principle internally, are not permitted until their suitability for SINAMICS Safety Integrated has been determined.

Safe motion monitoring

Two read parameters are available for safe motion monitoring:

r9730: SI Motion maximum velocity
Displays the maximum velocity (load side) permissible due to the acquisition of actual values for safe motion monitoring functions. The maximum velocity for actual value acquisition depends on the actual value update clock cycle (p9311/p9511). Parameter p9311/p9511 can be used to set the clock cycle of actual value acquisition for safe motion monitoring.

A slower clock cycle reduces the maximum permissible velocity, but also reduces the load on the Control Unit for safe actual value acquisition.

The maximum permissible velocity which, if overshot, can trigger faults in safe actual value acquisition, is displayed in parameter r9730.

r9731: SI Motion safe position accuracy

Displays the maximum positioning accuracy (load side) that can be ensured due to the acquisition of the actual value for the safe motion monitoring functions.

Both parameters r9730/r9731 depend on the relevant encoder type.

Overview of important parameters (see SINAMICS S110 List Manual)

- p9301.3 SI Motion enable safety functions (CPU 2), enable actual value synchronization
- p9501.3 SI Motion enable safety functions (CPU 1), enable actual value synchronization
- p9302 SI Motion axis type (CPU 2)
- p9502 SI Motion axis type (CPU 1)
- p9311 SI Motion clock cycle actual value acquisition (CPU 2)
- p9511 SI Motion clock cycle actual value acquisition (CPU 1)
- p9515 SI Motion encoder coarse position value configuration
- p9516 SI Motion encoder configuration safety functions (CPU 1)
- p9318 SI Motion encoder pulses per revolution (CPU 2)
- p9518 SI Motion encoder pulses per revolution (CPU 1)
- p9319 SI Motion fine resolution Gn_XIST1
- p9519 SI Motion fine resolution G1_XIST1 (CPU 1)
- p9320 SI Motion spindle pitch
- p9520 SI Motion spindle pitch (CPU 1)
- p9321[0...7] SI Motion gearbox encoder/load denominator (CPU 2)
- p9521[0...7] SI Motion gearbox encoder/load denominator (CPU 1)
- p9322[0...7] SI Motion gearbox encoder/load numerator (CPU 2)
- p9522[0...7] SI Motion gearbox encoder/load numerator (CPU 1)
- p9323 SI Motion significant bits POS2 (CPU 2)
- p9324 SI Motion fine resolution POS2 (CPU 2)
- p9325 SI Motion relevant bits POS2 (CPU 2)
- p9523 SI Motion significant bits POS2 (CPU 1)
- p9524 SI Motion fine resolution POS2 (CPU 1)
- p9525 SI Motion relevant bits POS2 (CPU 1)
- p9342 SI Motion actual value comparison tolerance (crosswise) (CPU 2)
- p9542 SI Motion actual value comparison tolerance (crosswise) (CPU 1)
- p9349 SI Motion slip speed tolerance (CPU 2)
- p9549 SI Motion slip speed tolerance (CPU 1)
- r9713[0...2] SI Motion diagnostics position actual value (MAKSIP)
- r9714[0...1] SI Motion diagnostics speed
- r9724 SI Motion crosswise comparison clock cycle
- r9730 SI Motion safe maximum speed
- r9731 SI Motion safe position accuracy

8.5.13.2 Safe current actual value acquisition without encoder

Several parameters are available in order to guarantee safe motion monitoring for Safety Extended functions without encoder depending on the situation in your particular application. You define these parameters in the following STARTER dialog box:

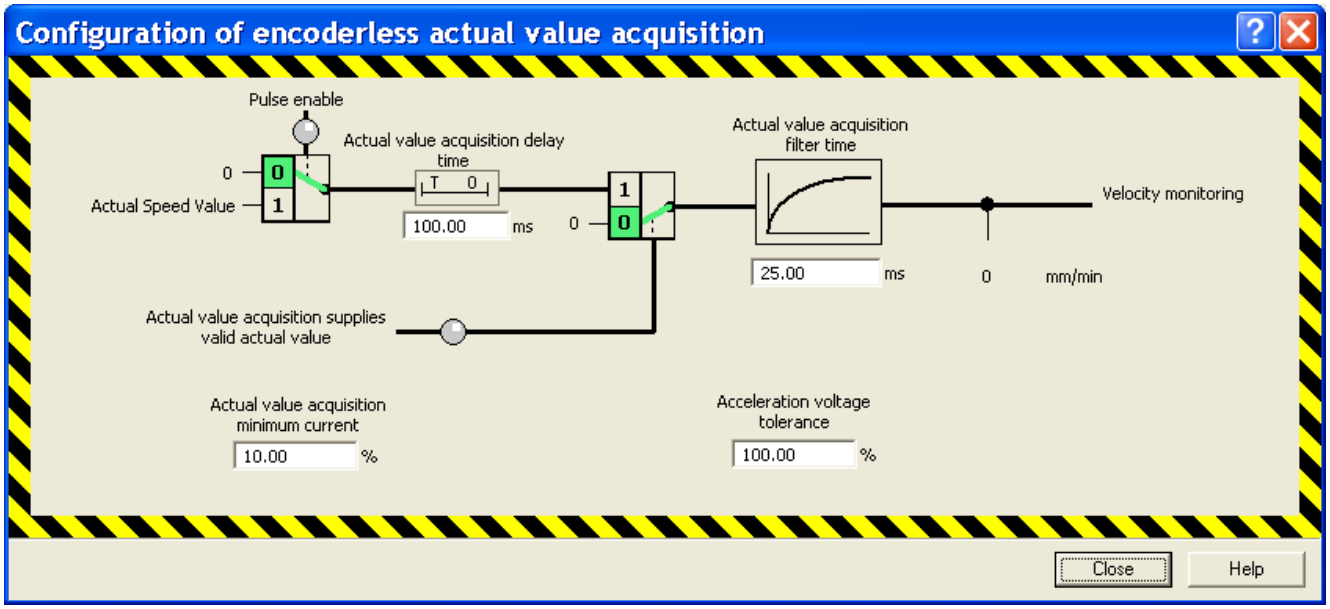

Figure 8-16 Configuration, actual value acquisition without encoder

In most cases, you can work with the default values. If the converter outputs unnecessary messages/signals – especially during the starting phase – then increase the value of the selected parameter **Delay time actual value acquisition** (p9586/p9386).

Instructions to determine the correction value using the trace function are provided in the "Reaction times" section. Alternatively, you can change the value of p9586/p9386 in small steps and then monitor the system reaction. You have found a suitable value if unnecessary messages/signals no longer occur.

Overview of important parameters (see SINAMICS S110 List Manual)

- p9386 SI Motion delay time of the evaluation, encoderless (processor 2)
- p9387 SI Motion actual value acquisition encoderless filter time (processor 2)
- p9388 SI Motion actual value acquisition encoderless minimum current (processor 2)
- p9389 SI Motion voltage tolerance acceleration (processor 2)
- p9586 SI Motion delay time of the evaluation, encoderless (CU)
- p9587 SI Motion actual value acquisition encoderless filter time (processor 1)
- p9588 SI Motion actual value acquisition encoderless minimum current (processor 1)
- p9589 SI Motion voltage tolerance acceleration (processor 1)

8.5.14 Forced dormant error detection

Forced dormant error detection and function test through test stop

The functions and switch-off signal paths must be tested at least once within a defined period to establish whether they are working properly in order to meet the requirements of EN ISO 13849-1 and IEC 61508 in terms of timely error detection.

The maximum permissible interval for forced dormant error detection with the Basic and Extended Functions is 9000 hours or once a year.

This functionality must be implemented by means of test stop triggering either in cyclic manual mode or by the automated process.

The test stop cycle is monitored. On expiration of the parameterized timer (also after POWER ON / warm restart), the alarm A01697: "SI Motion: Test of motion monitoring required" is generated and a status bit is set which can be transferred to an output or to a PZD bit via BICO. This alarm does not affect machine operation.

The test stop must be initiated application-specific and be executed at a time which suits application requirements. This functionality is implemented by means of a single-channel parameter p9705 which can be wired via BICO either to an input terminal on the drive unit (Control Unit), or to an IO-PZD in the drive telegram.

- p9559 SI Motion forced dormant error detection timer (CPU 1)
- p9705 BI: SI Motion Test stop signal source
- r9723.0 CO/BO: SI Motion PROFIsafe diagnostics signals, dynamic response required

A test stop does not require POWER ON. The acknowledgment is set by canceling the test stop request.

When the appropriate safety devices are implemented (e.g. protective doors), it can be assumed that running machinery will not pose any risk to personnel. For this reason, only an alarm is output to inform the user that a forced dormant error detection run is due and to request that this be carried out at the next available opportunity.

Examples of when to carry out forced dormant error detection:

- When the drives are at a standstill after the system has been switched on.
- Before the protective door is opened.
- At defined intervals (e.g. every 8 hours).
- In automatic mode (time and event dependent)

Note

STO is triggered when a test stop is carried out for the Safety functions.

STO must not be active before the test stop is selected.

The test stop must be triggered under controlled standstill conditions (speed setpoint setting 0) (OFF2 must not be active).

F-DI/F-DO forced dormant error detection

For forced dormant error detection of the F-DI, the level of the F-DI must be inverted, e.g. by activating the appropriate switch or triggering the appropriate function in the connected safety control. The correct reaction to the level change on the F-DI must be observed by the person carrying out the operation.

If the F-DO is used, it must undergo forced dormant error detection by triggering the appropriate functions in the drive and the resulting level changes on the F-DO.

The correct function of the F-DO must be checked by whoever carries out forced dormant error detection or the test stop. The required format of the check is determined by the F-DO interconnection.

The test stop must be executed at a suitable time. That is, it must be initiated specific to the application. This functionality is implemented by means of a parameter p10007 which can be wired via BICO either to an input terminal on the drive unit (Control Unit), or to an IO-PZD in the drive telegram.

- F-DO at an F-DI of a safety device

  (as illustrated in the section titled "Application examples/Input/output interconnections for a safety switching device with CU305)

  ⇒ In the case of dormant error detection for the F-DO, its two output drivers are checked by the F-DI of the connected safety device to ensure that they are functioning correctly.

- F-DO at two contactors with positively-driven auxiliary contacts

  (see the section titled Application examples/Interconnection of F-DO with redundant contactors)

  ⇒ The feedback contacts of both contactors have to be monitored by a controller or another monitoring unit to ensure that they both close when the F-DO is switched off (see Application examples (Page 454)).

- When connecting other loads, remember that the correct function of the two output drivers has to be monitored separately where forced dormant error detection is concerned.

You will find more instructions for carrying out test stops in the chapter Test stop (Page 441).

⚠WARNING

For the SINAMICS S110 drive system, to perform a self test, a POWER OFF/POWER ON[1)] must be performed for the Control Unit at least once a year. This also applies, if the forced checking procedure of the safety functions takes place more frequently than once per year.

[1)] For SINAMICS S110, the Control Unit can also be supplied from the line connection of the Power Module. For SINAMICS S110, a POWER OFF/POWER ON means line supply off/on for the Power Module and – if one is being used – also for the 24V power supply.

8.5.15 Safety Info Channel

The Safety Info Channel (SIC) enables Safety Integrated functionality status information of the drive to be transmitted to the higher-level control.

Telegram 700

The predefined PROFIdrive telegram 700 is available for this transmission:

You can find further information on communication via PROFIdrive in the Manual "S120 Drive Functions", section "Communication according to PROFIdrive"

Table 8- 14 Structure of telegram 700

	Receive data	Send data	Parameter
PZD1	–	S_ZSW1B	r9734
PZD2	–	S_V_LIMIT_B	r9733.2
PZD3	–		

Note

The transmit data S_ZSW1B and S_V_LIMIT_B are only updated if the Safety Integrated Extended Functions are enabled.

S_ZSW1B

Safety Info Channel: Status word

Table 8- 15 Description S_ZSW1B

Bit	Meaning	Remarks		Parameter
0	STO active	1	STO active	r9734.0
		0	STO not active	
1	SS1 active	1	SS1 active	r9734.1
		0	SS1 not active	
2	SS2 active	1	SS2 active	r9734.2
		0	SS2 not active	
3	SOS active	1	SOS active	r9734.3
		0	SOS not active	
4	SLS active	1	SLS active	r9734.4
		0	SLS not active	
5	SOS selected	1	SOS selected	r9734.5
		0	SOS deactivated	
6	SLS selected	1	SLS selected	r9734.6
		0	SLS not selected	
7	Internal event	1	Internal event	r9734.7
		0	No internal event	
8…11	Reserved	–	–	–
12	SDI positive selected	1	SDI positive selected	r9734.12
		0	SDI positive not selected	
13	SDI negative selected	1	SDI negative selected	r9734.13
		0	SDI negative not selected	
14	Emergency retraction requested	1	Emergency retraction requested	r9734.14
		0	Emergency retraction not requested	
15	Safety message effective	1	Safety message effective	r9734.15
		0	No Safety message effective	

S_V_LIMIT_B

SLS speed limit with a 32-bit resolution with sign bit.

- The SLS speed limit is available in r9733[2].
- Bit 31 determines the sign of the value:
  - Bit = 0 → positive value
  - Bit = 1 → negative value
- The SLS speed limit is standardized via p2000.

  S_V_LIMIT_B = 4000 0000 hex ≙ speed in p2000

8.6 Controlling the safety functions

Safety Integrated functions can be controlled via on-board terminals or via a PROFIsafe telegram using PROFIBUS. The Extended Functions can be controlled via on-board terminals or PROFIsafe, control of the Basic Functions can be selected via on-board terminals (F-DI 0) or PROFIsafe and on-board terminals (F-DI 0).

NOTICE
PROFIsafe or terminals With a Control Unit, control of the Extended Functions is only possible using PROFIsafe or on-board terminals. Mixed operation is not permissible.

On-board terminals

The failsafe input and output terminals (F-DI and F-DO) act as an interface between the internal Safety Integrated functionality and the process.

A dual channel signal applied to an F-DI (Failsafe Digital Input, safety-oriented digital input = safe input terminal pair) controls the active monitoring of the activation/deactivation of safety functions. This function also depends on the status of sensors (e.g. switches).

An F-DO (Failsafe Digital Output, safety-oriented digital output = safe output terminal pair) delivers a dual channel signal representing feedback from the safety functions. It is also suitable for the failsafe control of actuators (e.g. line contactor). Please also see diagram "Internal connections of the DI/DO of the CU305 with Safety function".

Dual-channel processing of I/O signals

A dual-channel structure is realized for data input/output and for processing failsafe I/O signals. All requests and feedback signals for failsafe functions should be entered or tapped using both channels.

8.6.1 Control of the Basic Functions via a safe input terminal pair

Features

- Only for the STO, SS1 (time-controlled), and SBC functions
- Dual-channel structure via two input terminals as a safe input terminal pair
- A debounce function can be applied to the terminals of the Control Unit and the Power Module to prevent incorrect trips due to signal disturbances or asymmetrical test signals. Parameters p9651 and p9851 are used to set filter times.

Overview of the safety function terminals for SINAMICS S110

The digital input terminals DI16 and DI17 are defined as F-DI0 for the control of the Basic Functions, if these are enabled (see diagram "Internal connection of DI/DO of the CU305 with safety function"). Both terminals are processed securely by different signal evaluators in two channels. Both terminals must be activated within a parameterized tolerance time, otherwise a fault will be issued.

Simultaneity and tolerance time of the two monitoring channels

The "Safe Torque Off" function must be selected/deselected simultaneously in both monitoring channels using the input terminals.

1 signal: Deselecting the function

0 signal: Selecting the function

"Simultaneously" means:

The changeover must be complete in both monitoring channels within the parameterized tolerance time.

- p9650 SI SGE changeover tolerance time (CPU 1)
- p9850 SI SGE changeover tolerance time (CPU 2)

Note

To avoid incorrect triggering of fault messages, on these inputs the tolerance time must always be set to be smaller than the shortest time between two switching events (ON/OFF, OFF/ON).

If the STO is not selected by both channels within the tolerance time, this is detected by the data cross-check and fault F01611 or F30611 (STOP F) is output. In this case, the pulses have already been canceled as a result of the selection of "Safe Torque Off" on one channel.

8.6.2 Control of the Extended Functions using safe input terminals

General information

Control Unit CU305 has 6 digital inputs, which can be used as 3 safe input terminal pairs (F-DI) for controlling the Extended Functions.

Furthermore, a single digital output on the CU305 can be extended as a safe output terminal pair (F-DO) and used for the Extended Functions.

- F-DI 0 = DI16/DI17
- F-DI 1 = DI18/DI19
- F-DI 2 = DI20/DI21
- F-DO 0 = DO16+/DO16-

The signal states of the two digital inputs of the F-DI are frozen at logical 0 (safety function selected) when different signal states are present within a failsafe F-DI, until a safe acknowledgment has been carried out by means of an F-DI via parameter p10006 (SI acknowledgment internal event input terminal) or the extended alarm acknowledgment has been carried out.

The monitoring time (p10002) for the discrepancy of the two digital inputs of an F-DI may have to be increased so that switching operations do not trigger an undesired response, thereby necessitating a safe acknowledgment. The signal states at the two related digital inputs (F-DI) will need to have the same state within this monitoring time or fault message C01770/C30770 will be triggered. This requires safe acknowledgment.

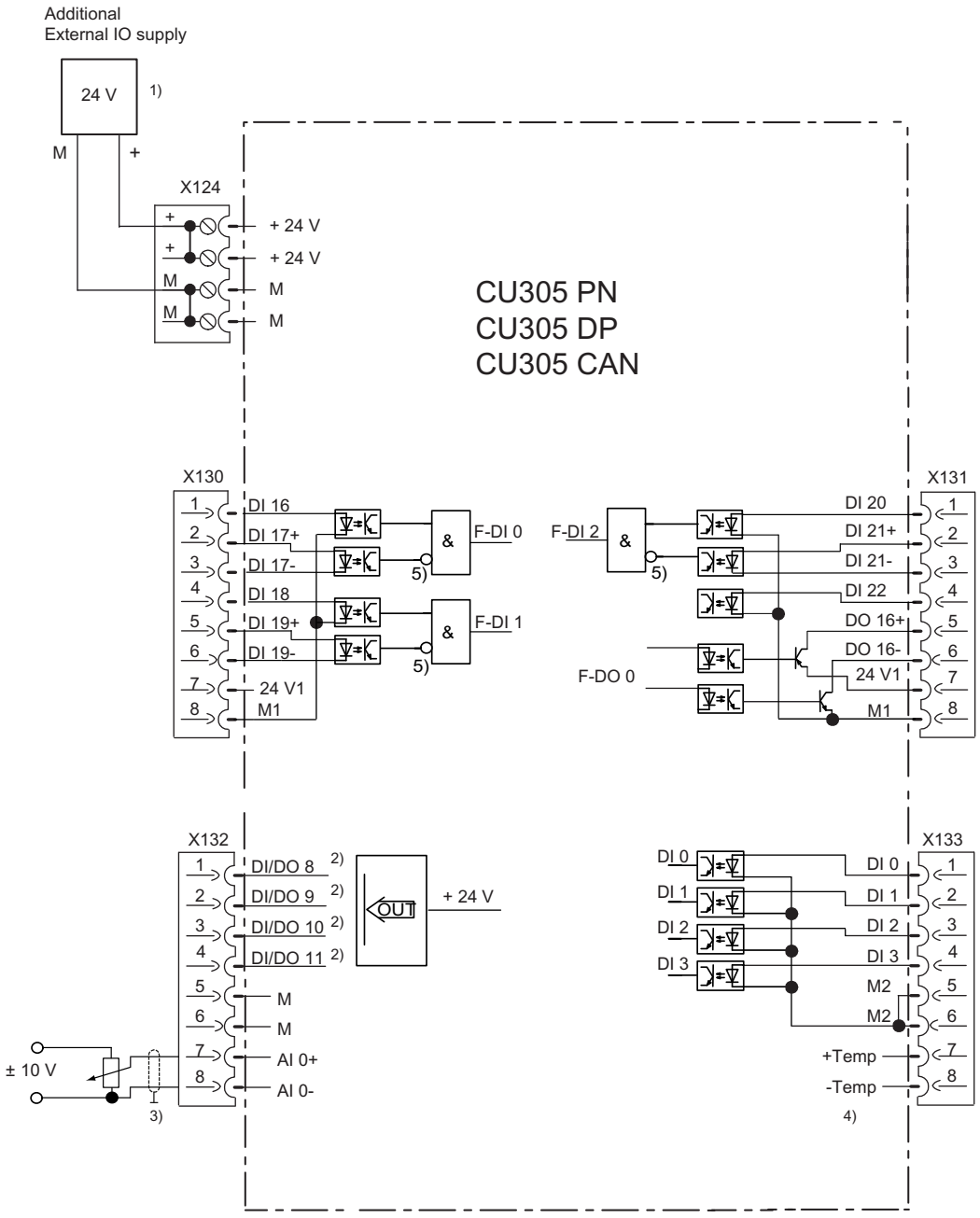

1) Required for supply of the digital outputs DO 8 to DO 11
2) Use shielded cables for fast inputs
3) Use shielded cable for analog input
4) Use shielded cable for motor temperature sensor input
5) The inversion can be parameterized

Figure 8-17 Internal connections of the DI/DO of the CU305 with the safety function

Description

Failsafe digital inputs (F-DI) consist of two digital inputs. The cathode of the optocoupler is routed to the second digital input in order to allow the connection of an M-switching F-DO output (the anode must be connected to 24 V DC).

Parameters p10040/p10140 are used to determine whether an F-DI is operated as NC/NC or NC/NO contact. The status of each DI can be read at parameter r0722. The same bits of both drive objects are logically linked by AND operation and return the status of the relevant F-DI (r10051/r10151).

Test signals from controls can be filtered out using parameter p10017/p10117, so that faults are not incorrectly interpreted.

Explanation of terms:

NC contact / NC contact: To select the safety function, a "zero level" must be present on both inputs.

NC contact / NO contact: To select the safety function, a "zero level" at input 1 and a "1 level" at input 2 must be present.

The signal states at the two associated digital inputs (F-DI) must assume the same status configured in p10040/p10140 within the monitoring time set in p10002/p10102.

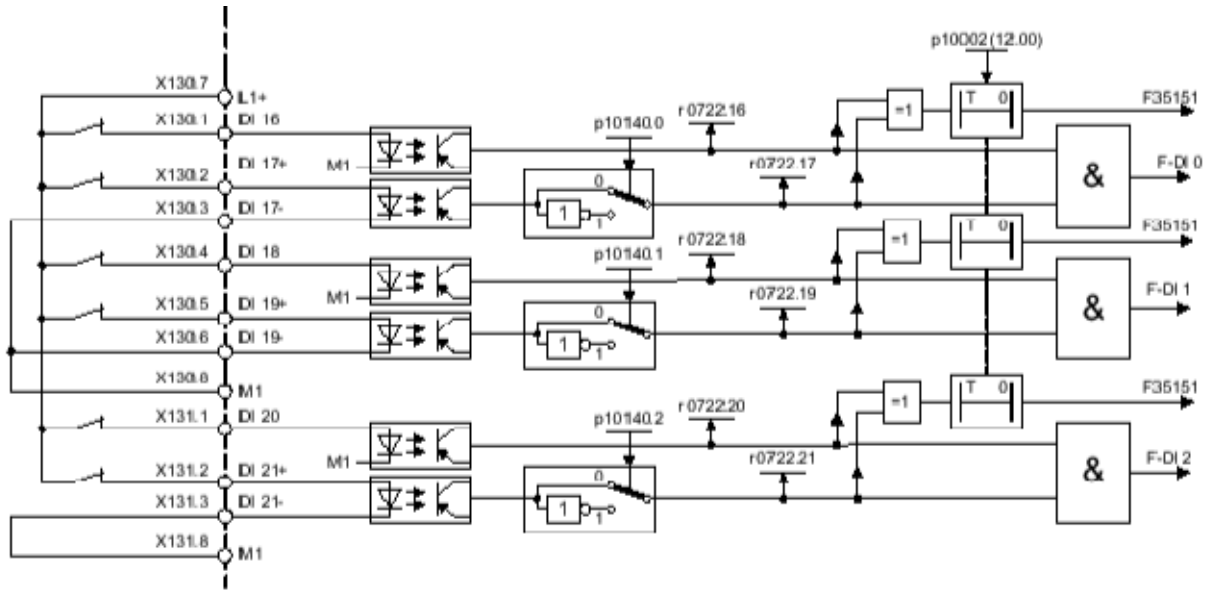

Figure 8-18 Overview of F-DI 0 ... 2

F-DI features

- Failsafe configuration with two digital inputs per F-DI
- Input filter for test signals with an adjustable gating time (p10017/p10117)
- Configurable connection of NC/NC or NC/NO contacts by means of parameter p10040/p10140
- Status parameter r0722, r10051/r10151
- Adjustable time window for monitoring discrepancy at both digital inputs by means of parameter p10002/p10102 for all F-DIs

Note

To avoid incorrect triggering of fault messages, on these inputs the discrepancy time must always be set less than the shortest time between two switching events (ON/OFF, OFF/ON).

- 2. Digital input with additional tap of the optocoupler cathode for connecting an M-switching output of a failsafe controller.

⚠ WARNING

In contrast to mechanical switching contacts (e.g. Emergency Stop switches), leakage currents can still flow in semiconductor switches such as those usually used at digital outputs even when they have been switched off. This can lead to false switching states if digital inputs are not connected correctly.

The conditions for digital inputs/outputs specified in the relevant manufacturer documentation must be observed.

⚠ WARNING

In accordance with IEC 61131 Part 2, Chapter 5.2 (2008), only outputs that have a maximum residual current of 0.5 mA when "OFF" can be used to connect CU305 digital inputs with digital semiconductor outputs.

The inclusion of additional load resistors makes it possible to use digital outputs with larger residual currents to connect CU305 inputs.

8.6.3 Note on F-DIs

Note

For enabled Extended Functions, you cannot use F-DIs which are not used for Extended Functions, for other functions. Although you can connect the F-DIs, Safety Integrated returns a discrepancy error message as soon as they are activated. This is because these F-DIs are monitored for discrepancy even when no Safety functions are assigned to them.

Overview of important parameters (see SINAMICS S110 List Manual)

- r0722 CO/BO: CU digital inputs, status
- p10002 SI discrepancy monitoring time
- p10017 SI digital inputs debounce time
- p10040 SI F-DI input mode
- p10102 SI discrepancy monitoring time (2nd channel)
- p10117 SI digital inputs debounce time MM
- p10140 SI F-DI input mode (2nd channel)

8.6.4 Overview of the F-DOs

Description

The failsafe digital output (F-DO) consists of two digital outputs. At the first digital output DO16+ the 24 V potential connected to the terminal 24V1 is switched, and at the second terminal the ground potential connected to terminal M1 is switched (see diagram below "Overview F-DO").

To enable forced dormant error detection, the F-DO must be dynamized with the parameterized function (p10047) (for additional information on forced dormant error detection, see the corresponding function description in the "Extended Functions" section).

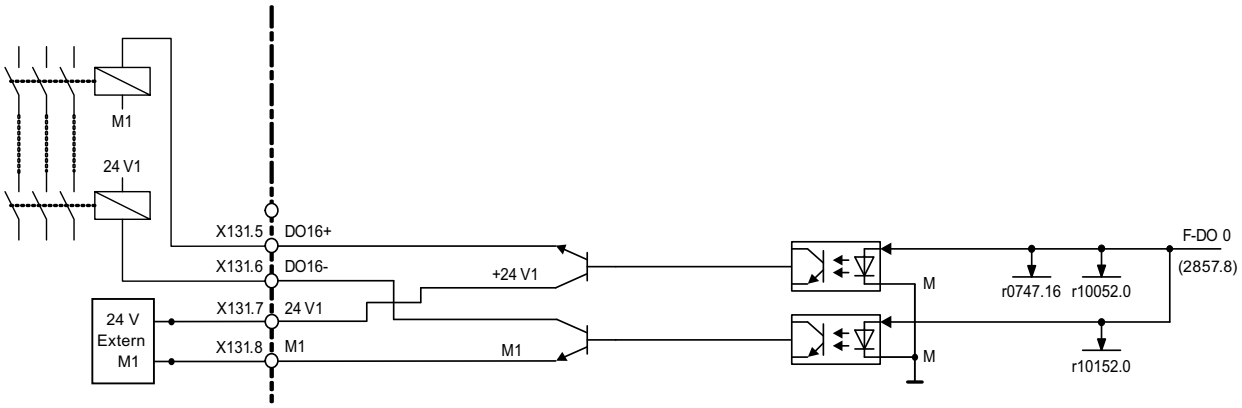

Figure 8-19 F-DO Overview

Signal sources of the F-DO

The following signals are available for outputs for the F-DO. Setting using parameter p10042/p10142:

- STO active
- SS1 active
- SS2 active
- SOS active
- SLS active
- SSM feedback active
- Safestate
- SOS selected
- Internal event
- Active SLS level bit 0
- Active SLS level bit 1
- SDI positive active
- SDI negative active

The following signals can be called via p10039/p10139 to create the Safe State signal.

- Power_removed
- SS1_active
- SS2_active
- SOS_active
- SLS_active
- SDI_pos_active
- SDI_neg_active

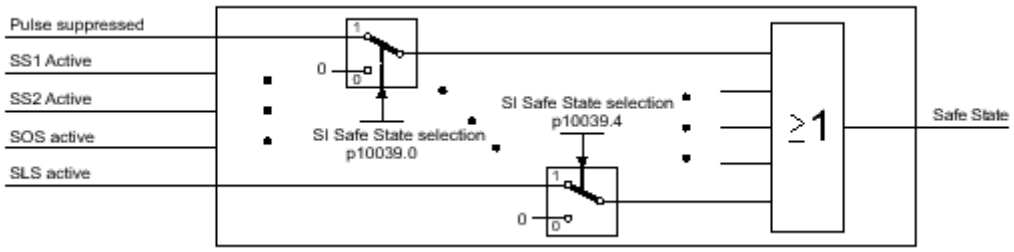

Figure 8-20 Safe state selection

The different signals selected through p10039/p10139 are logically linked by means of OR operation. Result of these logic operations is the "Safe State".

F-DO features

- Failsafe design with two digital outputs
- Status parameters r10052/r10152

Function diagrams (see SINAMICS S110 List Manual)

- 2853 Safety Integrated - Extended Functions (F-DO 0)
- 2856 Safety Integrated - Extended Functions, safe state selection
- 2857 Safety Integrated - Extended Functions, assignment F-DO 0

Overview of important parameters (see SINAMICS S110 List Manual)

- p10039 SI Safe State signal selection
- p10042[0..5] SI F-DO 0 signal sources
- r10052.0 CO/BO: SI Digital output status (CPU 1)
- p10139 SI Safe State signal selection (CPU 2)
- p10142[0...5] SI F-DO 0 signal sources (CPU 2)
- r10152.0 CO/BO: SI Digital output status (processor 2)

8.6.5 Control by way of PROFIsafe

Safety Integrated functions can also be controlled via PROFIsafe, as opposed to control via terminals. PROFIsafe telegram 30 is used for communication via PROFIBUS.

Control via PROFIsafe is available for both Safety Integrated Basic Functions and Safety Integrated Extended Functions.

The structure of the associated control and status words is described in more detail later in this document (see the "Description of telegram 30" chapter).

8.6.5.1 Enabling of the control via PROFIsafe

SINAMICS devices require a PROFIBUS interface for PROFIsafe communication.

The drive with PROFIsafe configured in the drive unit is a PROFIsafe slave (F slave or F Device) with failsafe communication to the F host via PROFIBUS and is assigned its own PROFIsafe telegram.

In so doing, a PROFIsafe safety channel, a so-called safety-slot is created using the HW Config tool from SIMATIC Manager Step 7. It is then possible to also control the Basic Functions using PROFIsafe telegram 30. The structure of the associated control and status words is described in more detail later in this document (see the "PROFIsafe STW" and "PROFIsafe ZSW" tables). The PROFIsafe telegram 30 is placed in front of the standard telegram for communication (e.g. telegram 2).

Enabling PROFIsafe

The Safety Integrated functions are enabled via PROFIsafe using parameters p9601 and p9801:

- Basic Functions: p9601.2 = 0, p9801.2 = 0
  Extended Functions: p9601.2 = 1, p9801.2 = 1
- p9601.3 = 1, p9801.3 = 1

Note

Licensing for Safety Integrated Basic Functions via PROFIsafe

No license is required to use Basic Functions. This also applies to control via PROFIsafe. However, for Extended Functions, you require an appropriate license that will be charged for.

All parameters involved in PROFIsafe communication are password protected against undesirable changes and secured using a checksum. The telegrams are configured using a configuration tool (e.g. SIMATIC Manager HW Config + F-Configuration Pack or SCOUT) on the F host.

Safety Integrated functions via PROFIsafe and terminals

The control of Safety Integrated functions via terminals (parameter p9601.0 = p9801.0 = 1) may also be enabled. This means the STO and SS1 (time controlled) functions can be selected in parallel via both PROFIsafe telegram 30 and the on-board terminal F-DI 0.

STO takes priority over SS1, i.e. STO is executed if SS1 and STO are triggered at the same time.

8.6.5.2 Structure of telegram 30

Structure of telegram 30 (Basic Functions)

PROFIsafe control word (STW)

S_STW1, PZD1 in telegram 30, output signals
See function diagram [2840].

Table 8- 16 Description of the PROFIsafe STW

Bit	Meaning	Remarks	
0	STO	1	Deselect STO
		0	Select STO
1	SS1	1	Deselect SS1
		0	Select SS1
2	SS2	0	–[1)]
3	SOS	0	–[1)]
4	SLS	0	–[1)]
5	Reserved	-	–
6	Reserved	-	–
7	Internal Event ACK	1/0	Acknowledgment
		0	No acknowledgment
8	Reserved	-	–
9	Select SLS bit 0	-	–[1)]
10	Select SLS bit 1	-	
11...15	Reserved	-	–

[1)] Signals not relevant to Basic Functions should be set to "0".

PROFIsafe status word (ZSW)

S_ZSW1, PZD1 in telegram 30, input signals
See function diagram [2840].

Table 8- 17 Description of the PROFIsafe status word (ZSW)

Bit	Meaning	Remarks	
0	STO active	1	STO active
		0	STO not active
1	SS1 active	1	SS1 active
		0	SS1 not active
2	SS2 active	0	–[1]
3	SOS active	0	–[1]
4	SLS active	0	–[1]
5	Reserved	-	–
6	Reserved	-	–
7	Internal Event	1	Internal event
		0	No internal event
8	Reserved	-	–
9	Active SLS level bit 0	-	–[1]
10	Active SLS level bit 1	-	
11	SOS selected	0	–[1]
12...14	Reserved	-	–
15	SSM (speed)	0	–[1]

[1] Signals not relevant to Basic Functions should be set to "0".

Structure of telegram 30 (Extended Functions)

PROFIsafe control word (STW)

S_STW1, PZD1 in telegram 30, output signals
See function diagram [2840].

Table 8- 18 Description of the PROFIsafe STW

Bit	Meaning	Remarks	
0	STO	1	Deselect STO
		0	Select STO
1	SS1	1	Deselect SS1
		0	Select SS1
2	SS2	1	Deselect SS2
		0	Select SS2
3	SOS	1	Deselect SOS
		0	Select SOS
4	SLS	1	Deselect SLS
		0	Select SLS
5	Reserved	-	-
6	Reserved	-	-
7	Internal Event ACK	1/0	Acknowledgment
		0	No acknowledgment
8	Reserved	-	-
		-	-
9	Select SLS bit 0	-	Selection of the speed limit for SLS (2 bits)
10	Select SLS bit 1	-	
11	Reserved	-	-
12	SDI positive	1	Deselect SDI positive
		0	Select SDI positive
13	SDI negative	1	Deselect SDI negative
		0	Select SDI negative
14, 15	Reserved	-	-

PROFIsafe status word (ZSW)

S_ZSW1, PZD1 in telegram 30, input signals
See function diagram [2840].

Table 8- 19 Description of the PROFIsafe status word (ZSW)

Bit	Meaning	Remarks	
0	STO active	1	STO active
		0	STO not active
1	SS1 active	1	SS1 active
		0	SS1 not active
2	SS2 active	1	SS2 active
		0	SS2 not active
3	SOS active	1	SOS active
		0	SOS not active
4	SLS active	1	SLS active
		0	SLS not active
5	Reserved	-	-
6	Reserved	-	-
7	Internal Event	1	Internal event
		0	No internal event
8	Reserved	-	-
		-	-
9	Active SLS level bit 0	-	Display of the speed limit for SLS (2 bits)
10	Active SLS level bit 1	-	
11	SOS selected	1	SOS selected
		0	SOS deactivated
12	SDI positive active	1	SDI positive active
		0	SDI positive not active
13	SDI negative active	1	SDI negative active
		0	SDI negative not active
14	Reserved	-	-
15	SSM (speed)	1	SSM (speed below limit value)
		0	SSM (speed higher than/equal to limit)

8.7 Commissioning

8.7.1 Safety Integrated firmware versions

General information

The Safety firmware on the CU305 Control Unit may have a different version number to the overall firmware version.

The parameters listed below can be used to read the version IDs from the relevant hardware components.

Read the overall firmware version via:

- r0018 Control Unit firmware version

The following firmware data can be read for the Basic Functions:

- r9770 SI version, drive-autonomous safety functions (CPU 1)

The following firmware data can be read for the Extended Functions:

- r9590 SI Motion version safe motion monitoring (CPU 1)
- r9890 SI version (Sensor Module)

Basic Functions and Extended Functions

During the acceptance test for Safety Integrated Basic Functions, the Safety firmware versions must be read, logged, and checked against the list below.

During the acceptance test for the Safety Integrated Extended Functions, the Sfety firmware versions of the Control Unit and the Sensor Modules or motor with DRIVE-CLiQ connection required for the safety functions are to be read, logged, and checked against the list below.

When Extended Functions are used, the firmware requirements for Basic Functions must also be fulfilled at all times.

The list of permissible Sfety firmware version combinations which must be used as a reference during the test, can be found under "Product Support" at the following address:
http://support.automation.siemens.com/WW/view/de/28554461
The procedure for checking is described in the following.

Procedure for checking the Safety firmware version combinations

The document in the link provided contains tables listing the permissible Safety firmware version combinations for the different Safety function classes (SINAMICS Basic Functions, SINAMICS Extended Functions, SINUMERIK Safety Integrated).

The Safety firmware version relevant for the Safety function can be read from the Control Unit. The row containing this version number specifies the associated, permissible Safety firmware versions of the relevant drive components. These versions must be compatible with the versions installed on your system.

8.7.2 Commissioning of Safety Integrated functions

8.7.2.1 General information

PROFIsafe commissioning with STARTER

1. The Safety Integrated Basic Functions can be commissioned using STARTER in three ways:
   - STO/SS1/SBC via terminals
   - STO/SS1/SBC via PROFIsafe
   - STO/SS1/SBC via PROFIsafe and terminals simultaneously
2. The Safety Integrated Extended Functions can be commissioned using STARTER in three ways:
   - Motion Monitoring via terminal
   - Motion monitoring via PROFIsafe
   - Motion monitoring via PROFIsafe and terminal simultaneously

There follows a brief overview of the STARTER functionality which enables Safety Integrated Functions to be used by means of terminals, PROFIsafe, or a combination of the two.

Safety slot

In order to use Safety Integrated functions via PROFIBUS or PROFINET, a safety slot must first be created using SIMATIC Manager Step 7 and HW Config. The procedure to do this was described in the previous chapters.

Expert list

The Safety Integrated Basic Functions can be individually and manually set using the Expert list; the settings using the STARTER screen forms, however, are more user-friendly and you are less prone to making mistakes.

Calling Safety Integrated in STARTER

- The STARTER screen form for "Safety Integrated" is called under Drives/Functions with a double-click and can look like this (tree-type view depends on the specific project):

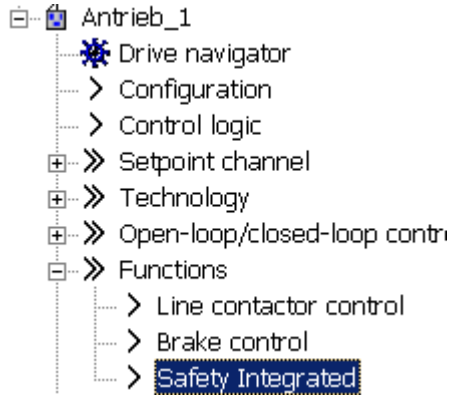

Figure 8-21 STARTER tree to call Safety Integrated

The password "0" is set by default.

- To use the full functionality of STARTER screens, there must be an online connection between the drives, the control, and STARTER.
- Select the type of control for Safety Integrated from the **Safety function selection** list.
- Depending on the selection, different setting screens open for the above listed control types.

NOTICE
For safety-relevant reasons, using the STARTER commissioning tool (or SCOUT) you can only set the safety-relevant parameters of the Control Unit offline. In order to set the Safety relevant parameters of the Power Module, place at tick in the checkbox "Copy parameters after download" and then make an online connection to the drive device. Or establish an online connection to the drive unit first and use the "Copy parameters" button to copy the parameters to the configuration start screen.

Note

For the encoder parameters (p9515 to p9529), which are used for safe motion monitoring, then the following behavior applies when copying:

- The following applies to safety-related functions that have not been enabled (p9501 = 0):
  - When powering up, the parameters are automatically set analog to the corresponding encoder parameters (e.g. p0410, p0474, ...).
- The following applies to safety-related functions that have been enabled (p9501 > 0):
  - The parameters are checked to ensure that they match the corresponding encoder parameters (e.g. p0410, p0474, ...).

Please refer to the parameter descriptions in the SINAMICS S110 List Manual for additional information.

Note

Activating changed Safety parameters

On exiting commissioning mode (p0010 = 0), most of the changed parameters become active immediately. For some parameters, however, a POWER ON is required: If this is the case, a STARTER message or an alarm from the drive will inform you about this.

When performing an acceptance test, a POWER ON is always required.

8.7.2.2 Prerequisites for commissioning the Safety Integrated functions

1. Commissioning of the drive must be complete.
2. A POWER ON (switching off/on) is carried out on the drive.
3. Non-safe pulse suppression must be present, e.g. via
   OFF1 = "0" or OFF2 = "0".

   If the motor holding brake is connected and parameterized, the holding brake is applied.
4. For operation with SBC, the following applies:

   A motor with a motor holding brake must be connected to the appropriate terminal of the module.

8.7.2.3 Default settings for commissioning Safety Integrated functions without encoder

Additional default settings are required before commissioning Safety functions without an encoder. Follow the steps below to start the ramp-function generator:

1. Activating the ramp-function generator: When offline, call the "Drive Navigator" in the completed project, select the device configuration, and click "Perform drive configuration". Select "Extended setpoint channel" from the function modules in the next window to appear. Select "Continue" each time to carry on with the configuration and "Complete" to finish. The ramp-function generator is now active and can be parameterized.

2. In the project window, open the ramp-function generator by double-clicking on **<Drive unit> → <Drive> → Setpoint channel → Ramp-function generator**:

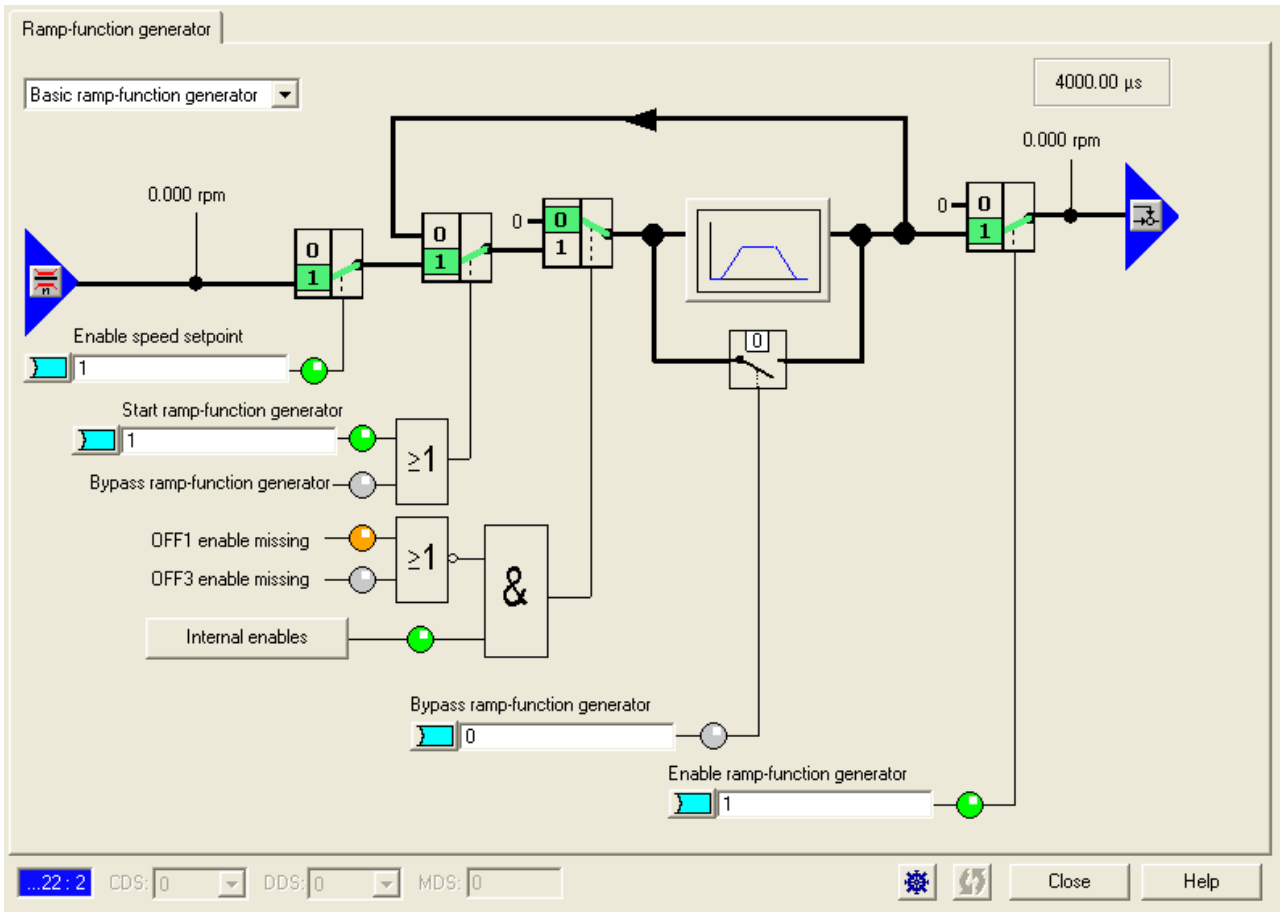

Figure 8-22 Ramp-function generator

3. Click the button with the ramp to open the following window:

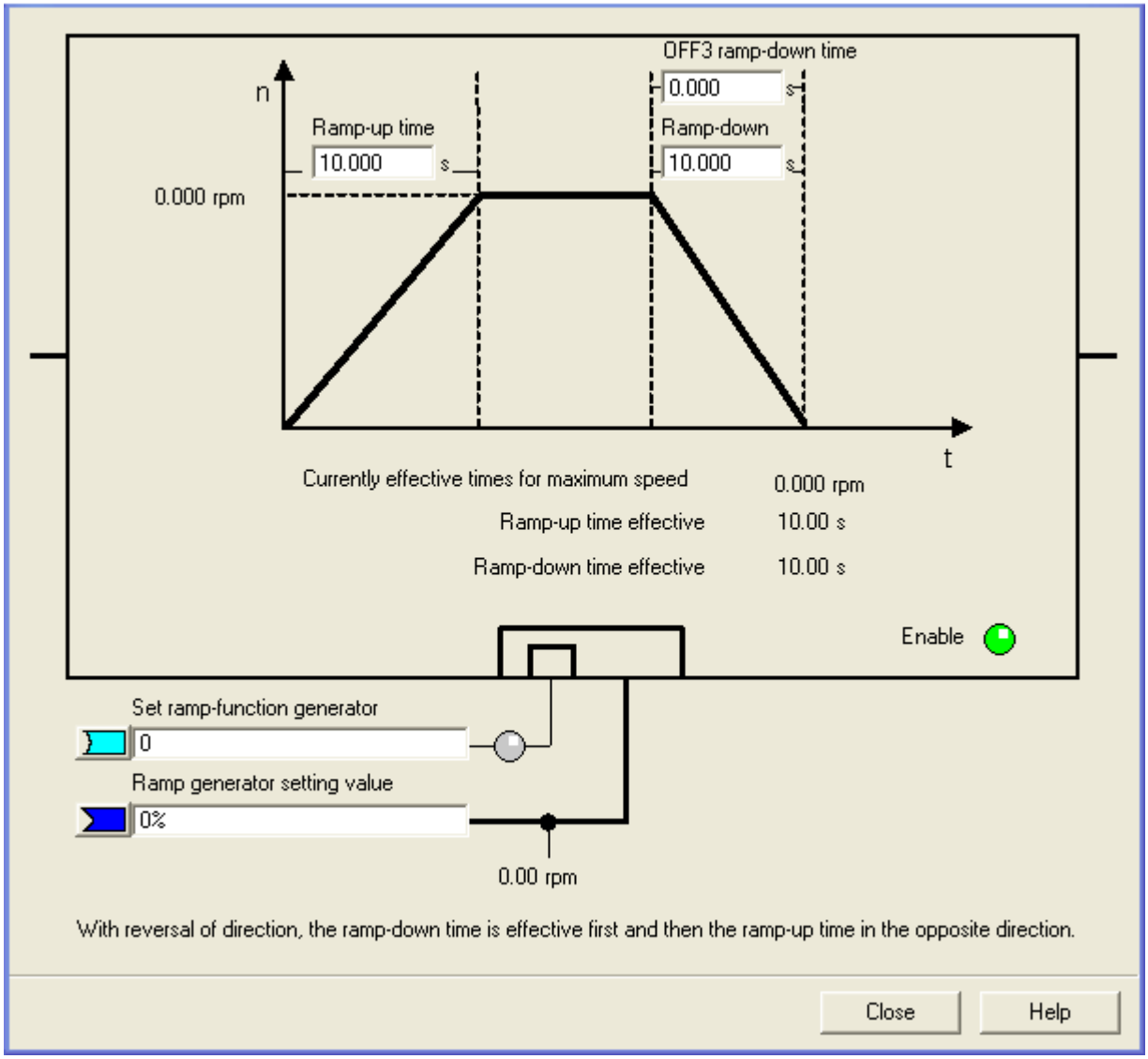

Figure 8-23 Drive-ramp

4. Enter data to define the drive-ramp in this window.
5. Then you must carry out the motor measurements: Start with static measurements and then take rotating measurements.

Note

These measurements are no longer possible once you have activated the Safety Integrated Extended Functions!

Activating Safety Integrated

1. Open the Safety Integrated selection window via **<Drive unit> → <Drive> → Functions → Safety Integrated** and select the Safety function you require.
2. Select "[1] Safety without encoder" in the pull-down menu below this.
3. Then open the configuration window and set the value for the current controller cycle as the actual value acquisition clock cycle (p9511).
4. Click "Gear factor" and set the actual value tolerance (p9542) to a larger value (e.g. 10 mm/min or 10 rpm) and the number of motor revolutions to match the pole pair number (r0313).
5. Open SS1 and set the shutdown speed > 0.
6. Call Safely Limited Speed, change all stop responses to "[0]STOP A" or "[1]STOP B", and close the window.
7. You will now be able to make user-specific safety settings.
8. Click "Copy parameters" and execute the command "Copy RAM to ROM".
9. Switch the drive off/on to accept the changes.

Note

If, during acceleration or deceleration, the drive outputs the message C01711/C30711 (message value 1041 to1043), this indicates problems, e.g. involving excessively high values for acceleration/deceleration. You have the following options to remedy this:

- Reduce the ramp gradient.
- Use the extended ramp-function generator (with rounding) to set a more gentle ramp up.
- Reduce the precontrol.
- Change the values of parameters p9586, p9587, p9588, p9589 and p9783 (see specifications in the List Manual).

8.7.2.4 Information pertaining to series commissioning

Standard commissioning of the safety functions

1. A commissioned project that has been uploaded to STARTER can be transferred to another drive unit keeping the existing Safety parameterization.
2. If the source and target devices have different software versions, the reference checksums may have to be adapted. This is indicated by a fault:

Reference checksums	Error
p9729[0…2]	F01680 (fault value: 0…2)
p9399[0…1]	F30680 (fault value: 0…1)
p9799	F01650 (fault value: 1000)
p9899	F30650 (fault value: 1000)

Once the project has been downloaded to the target device, an acceptance test must be carried out. This is also indicated by fault F01650 (fault value: 2004 or 2005).

⚠WARNING

Before re-entering the danger area and before resuming operation, a simplified function test must be carried out for the drive affected by the component exchange (see the "Acceptance test" chapter).

8.7.2.5 Setting the sampling times

Terminology

The software functions installed in the system are executed cyclically at different **sampling times**.

Safety functions are executed within the **monitoring clock cycle** (p9300/p9500). The clock cycle is displayed in r9780/r9880 for the Basic Functions.

Communication on PROFIBUS is handled cyclically by means of the **communication clock cycle.**

During the PROFIsafe scan cycle, the PROFIsafe telegrams issued by the master are evaluated.

Rules for setting the sampling times

- The monitoring clock cycle (p9300/p9500) can be set between 500 µs to 25 ms.

  However, the calculation time required for the Extended Functions in the Control Unit depends on the monitoring clock cycle, that is, shorter clock cycles extend the calculation time. The availability of a specific monitoring clock cycle therefore depends on calculation time resources of the Control Unit.

  Calculation time resources on the Control Unit are affected primarily by the enabled Extended Functions and the selected technological functions.
- The monitoring cycle (p9300/p9500) must be an integer multiple of the actual value update clock cycle (p9311/p9511) or the communication clock cycle (if p9300/p9500 = 0).
- If Extended Safety Functions are being used, p9311/p9511 must be set ≥ 4 * current controller cycle, however at least ≥ 2 ms.

Overview of important parameters (see SINAMICS S110 List Manual)

- p9300 SI Motion monitoring clock cycle (Power Module)
- p9311 SI Motion clock cycle actual value sensing (Power Module)
- p9500 SI Motion monitoring clock cycle (Control Unit)
- p9511 SI Motion clock cycle actual value sensing (Control Unit)

8.7.3 Commissioning the safety terminals by means of STARTER/SCOUT

8.7.3.1 Basic sequence of commissioning

The following conditions must be met before you can configure the safety terminals:

- Concluded initial commissioning of the drive
- Measuring function (static or rotating measurement) completed

Table 8- 20 Configuration sequence

Step	Execution
1	Configuring safety terminals
2	Configure the inputs
3	Configure the output
4	Configuring Safety functions
5	Set the Safety password
6	Copy redundant parameters using "Copy parameters"
8	Activate the configuration by selecting "Activate settings"
9	Save the project in the drive by selecting "Copy RAM to ROM"
10	Load the project into the STARTER
11	Save the project in STARTER
12	Execute POWER ON
13	Carry out an acceptance test

8.7.3.2 Configuration start screen

Description

The start screen helps you to start configuring the Safety Integrated functions. Depending on whether you are using Basic Functions, Extended Functions with encoder or Extended Functions without encoder, the setup options on this screen have different scopes.

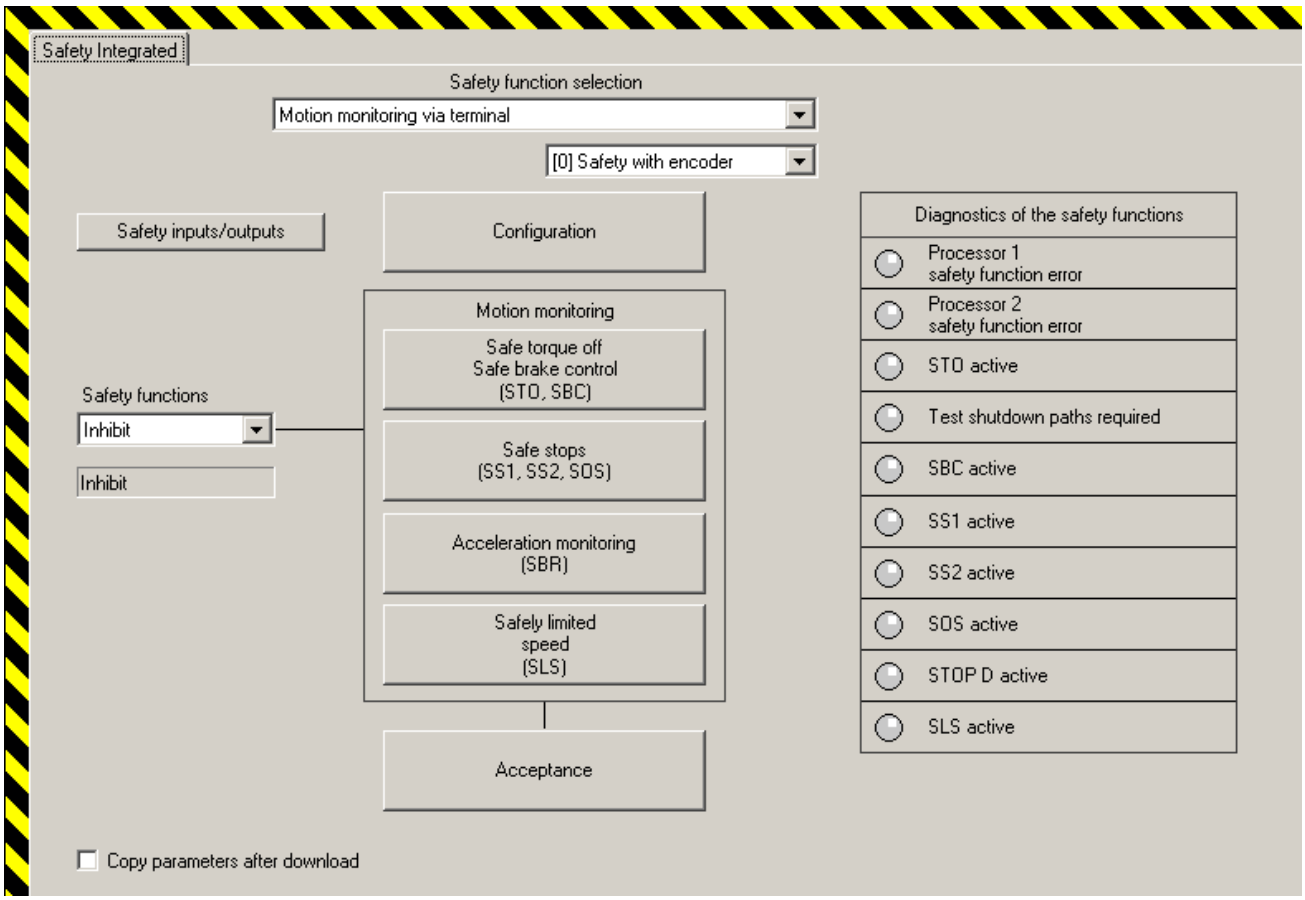

Figure 8-24 Safety Integrated start screen (example Basic Functions)

- Copy parameters

  Click this button to copy the redundant parameters from CPU 1 to CPU 2.

- Copying parameters after download (only available offline)

  By activating this option, the configuration is automatically copied into the second processor during download.

- Change/activate settings
  - Change settings

    You can select this button and enter the password in order to edit the configuration data. The button function changes to "Activate settings".
  - Activate settings

    This function accepts your parameter settings, calculates the actual CRC, and transfers this to the target CRC.

    The parameters are only activated after a restart.

    Subsequently, a message is output prompting you to save the project and then restart the system. An acceptance test is also required.
- Change password (p10061 ... p10063)

  In order to change the password, enter the old password (factory setting: 0) and then enter and confirm the new password.
- Restore Safety factory settings

  Click this button and then enter the Safety password. The "Restore Safety factory settings" dialog box opens.

Note

For complete details on the configuration screen, refer to the STARTER online help.

8.7.3.3 Configuration of the Safety terminals (Extended Functions)

Configuration screen of the terminals for Safety Integrated

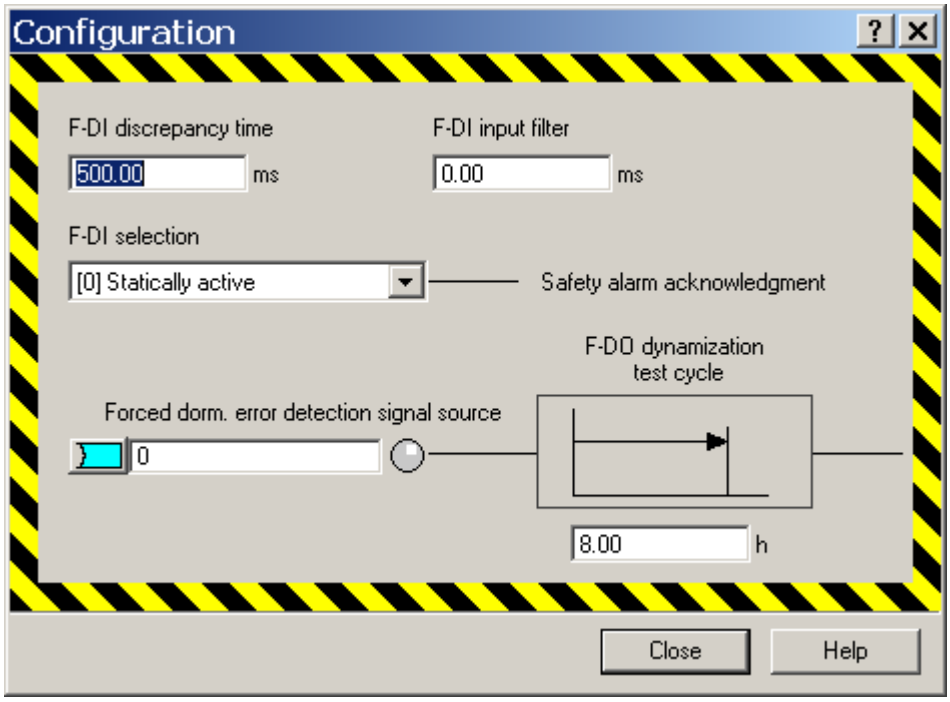

Figure 8-25 Configuring safety terminals

You can find this screen under**Safety inputs/outputs > Configuration**.

Functions of this screen:

- F-DI discrepancy time (p10002)

  The signal states at the two terminals of an F-DI are monitored in order to determine whether these have assumed the same logical state within the discrepancy time.

  Note

  The discrepancy time must be set so that it is always smaller than the smallest expected switching interval of the signal to this F-DI.

- F-DI input filter (p10017)

  Parameterization of the debounce time for the F-DIs. A rounded debounce time (to a full ms) is accepted. The debounce time specifies the maximum time an interference pulse can be present at an F-DI before being interpreted as a switching operation.

- F-DI selection (p10006 or extended alarm acknowledgment)

  The Extended Functions enter a safety message in a special message buffer upon the detection of internal errors or violations of limits. This alarm can only acknowledged safely. You can assign an F-DI terminal pair for safe acknowledgment.

- Signal source forced dormant error detection (p10007)

  Selection of an input terminal for the start of the test stop: The test stop is initiated by a 0/1 signal from the input terminal and can only be performed when the drive is not in commissioning mode.

- F-DO dynamization test cycle (p10003)

  Failsafe I/O must be tested at defined intervals in order to validate their failsafe state (test stop or forced dormant error detection). Control Unit 305 has a function block for this purpose. When selected via a BICO source, it executes this forced dormant error detection (e.g. switching the sensor power supply). Each selection triggers a timer in order to monitor the test cycle. A message is set on expiration of the monitored time.

Note

For enabled Extended Functions, you cannot use F-DIs which are not used for Extended Functions, for other functions. Although you can connect the F-DIs, Safety Integrated returns a discrepancy error message as soon as they are activated. This is because these F-DIs are monitored for discrepancy even when no Safety functions are assigned to them.

8.7.3.4 Test stop

Testing failsafe I/O

Failsafe I/O must be tested at defined intervals in order to validate their failsafe state (test stop or forced dormant error detection). For this purpose, SINAMICS S110 contains a function block which carries out this forced dormant error detection when selected via a BICO source. A timer is started after every error-free test stop to monitor the time until the next required test. After this time interval (p10003) has expired, and each time the Control Unit is switched on, the user is notified via message A01774 that a test stop must be performed for the F-DI/DO.

- Three test stop modes can be selected for testing the output (see following sections).
- The failsafe digital inputs must be checked by whoever carries out the forced dormant error detection.

Carrying out a test stop:

Proceed as follows to parameterize the test stop:

1. Determine the appropriate test stop mode for the circuits used in your application (see diagrams in the following sections).
2. Set the test stop mode which is to be used via parameter p10047.
3. Use parameter p10046 to define whether the digital output F-DO 0 is to be tested.
4. Set the debounce time for the digital inputs using parameter p10017.
5. Use parameter p10001 to set the time within which the digital output signals to the corresponding digital inputs or DIAG inputs must be recognized.
6. Use parameter p10003 to set the interval within which a test stop should be carried out. After this time interval has expired, you will be notified via message A01774 that a test stop must be performed for the F-DI/DO.
7. Set the signal source which triggers the start of the test stop using parameter p10007. This can be, for example, a control signal or switch via a BICO switchable signal.

While the test stop is being carried out, the message A01772 (test stop failsafe inputs / outputs active) appears. The messages A01772 and A01774 only disappear again after the test stop has been performed. If an error is found during the test stop, fault F01773 is output. Using the test sequence specified for each test stop mode, you can see which error has occurred from the fault value of the test step.

Duration of test stop

You can calculate the duration of the test stop by using this formula:

$$T_{\text{Test stop}} = \underbrace{3 \cdot p10000}_{\text{Test of the F-DIs}} + \underbrace{2 \cdot (3\ \text{ms} + p10017)}_{\text{Evaluation of the inactive F-DIs}} + \underbrace{8 \cdot p10000}_{\text{Test of the F-DO}} + \underbrace{6 \cdot (p10001 + p10017)}_{\text{Evaluation of the active F-DIs}}$$

Test stop mode 1

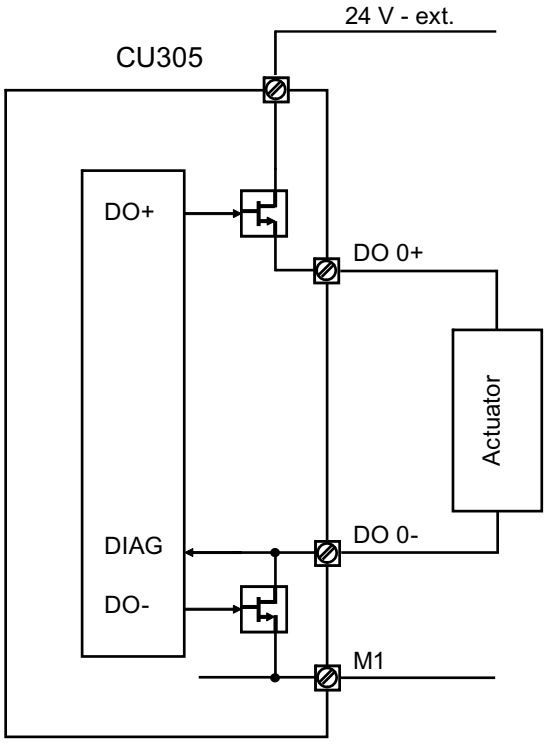

Figure 8-26 F-DO circuit, test stop mode 1

Test step[1)]	DO+	DO-	DIAG signal expectation
0 ... 3	–	–	Synchronization
4	OFF	OFF	LOW
6	ON	ON	LOW
8	OFF	ON	LOW
10	ON	OFF	HIGH
12	OFF	OFF	LOW

Test sequence for test stop mode 1

1) You can find a complete list of the steps in the SINAMICS S110 List Manual under message F01773.

Test stop mode 2

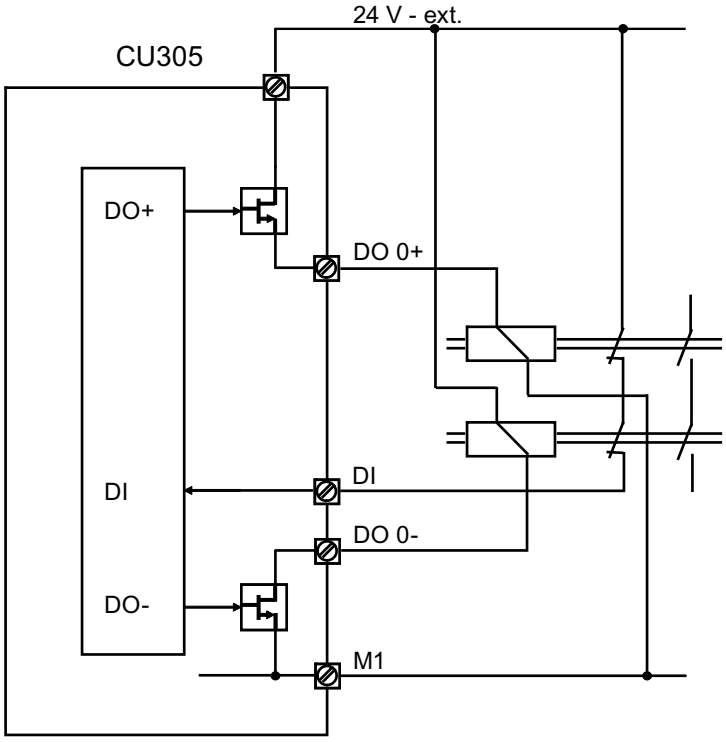

Figure 8-27 F-DO circuit, test stop mode 2

Test step[1)]	DO+	DO-	DIAG signal expectation
0 ... 3	–	–	Synchronization
4	OFF	OFF	HIGH
6	ON	ON	LOW
8	OFF	ON	LOW
10	ON	OFF	LOW
12	OFF	OFF	HIGH

Test sequence for test stop mode 2

[1)] You can find a complete list of the steps in the SINAMICS S110 List Manual under message F01773.

Test stop mode 3

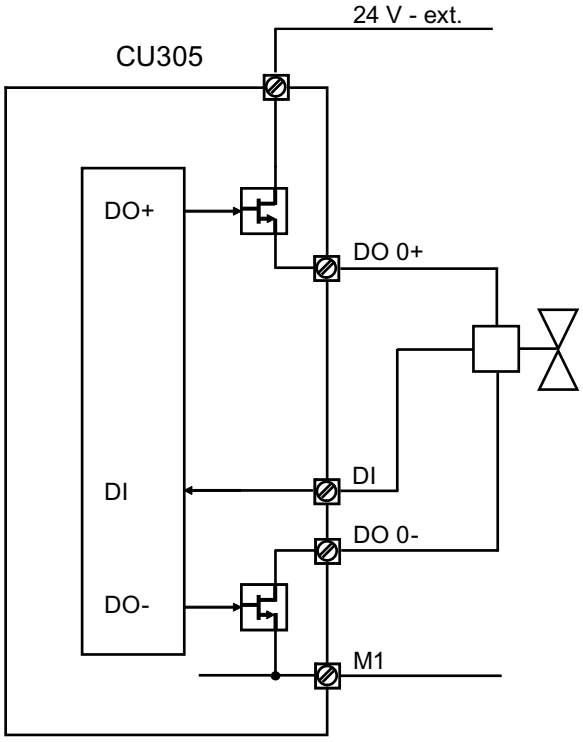

Figure 8-28 F-DO circuit, test stop mode 3

Test step[1)]	DO+	DO-	DIAG signal expectation
0 ... 3	–	–	Synchronization
4	OFF	OFF	HIGH
6	ON	ON	LOW
8	OFF	ON	HIGH
10	ON	OFF	HIGH
12	OFF	OFF	HIGH

Test sequence for test stop mode 3

1) You can find a complete list of the steps in the SINAMICS S110 List Manual under message F01773.

Overview of important parameters (see SINAMICS S110 List Manual)

- p10001 SI wait time for test stop at DO
- p10003 SI forced dormant error detection timer
- p10007 BI: SI forced dormant error detection F-DO signal source
- p10017 SI digital inputs debounce time
- p10046 SI test sensor feedback signal
- p10047 SI selection of test mode for test stop

8.7.3.5 F-DI/F-DO configuration

Inputs screen F-DI

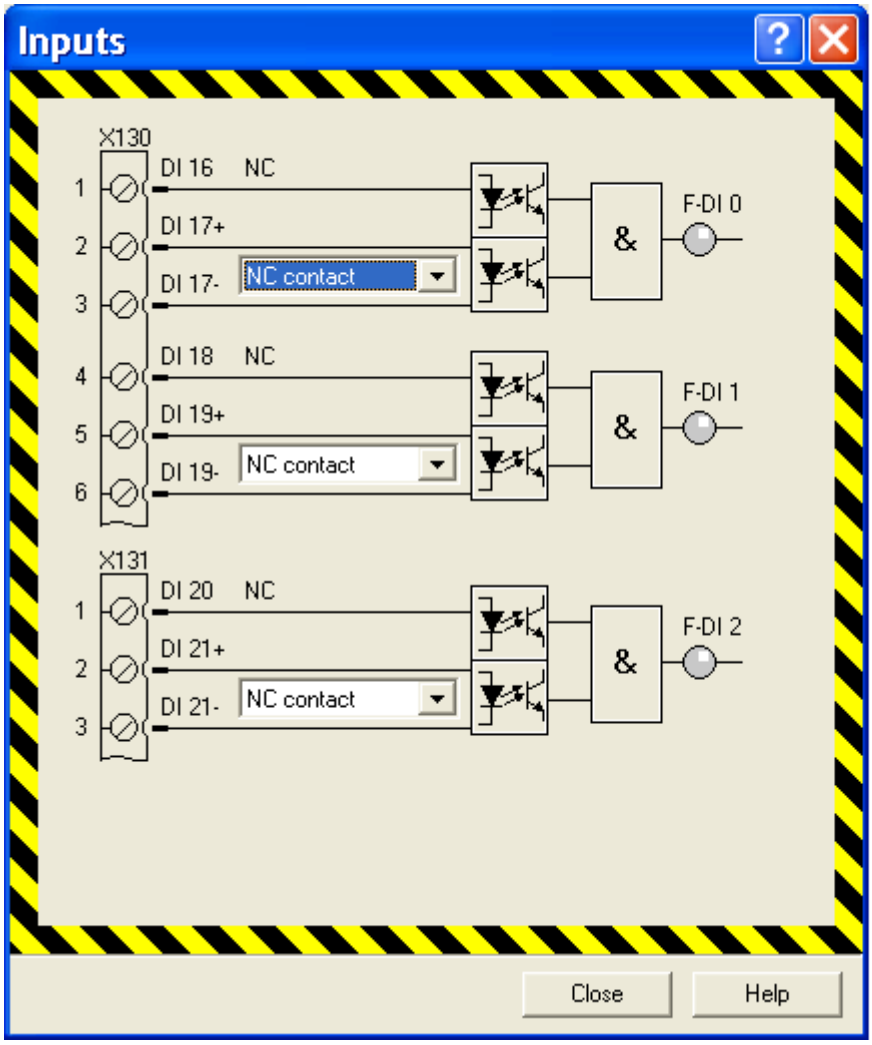

Figure 8-29 Inputs screen

- **NC/NO contact (p10040)**

  Terminal property F-DI 0-2 (p10040.0 = F-DI 0, ... p10040.2 = F-DI 2): Configure only the property of the second (lower) digital input. Always connect an NC contact to digital input 1 (upper). Digital input 2 can be configured as NO contact.

- **LED symbol in the F-DI screen**

  The LED symbol downstream of the AND element indicates the logical state (inactive: gray, active: green, discrepancy error: red).

F-DO output screen

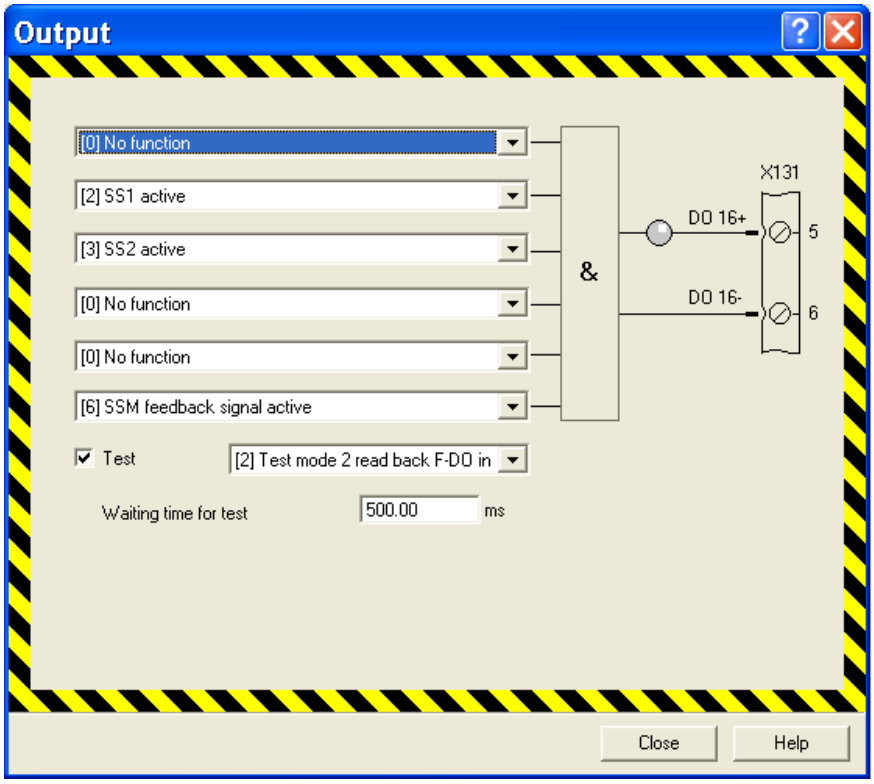

Figure 8-30 Output screen

- **Signal source for F-DO (p10042)**

  A six-way AND is connected downstream of the output terminal pair of the F-DO; the signal sources for the inputs of the AND can be selected:

  – No function (input set to logical HIGH; default)

    If a signal source is not connected to an input, then the input is set to HIGH (default), exception: If a signal source is not connected at any input, then the output signal = 0.

  – Status signals of the drive

    For additional information on status signals, see "F-DO overview" in the "Control signals by way of terminals" chapter.

- **Test selection F-DO (p10046, p10047)**

  At the F-DO, the test for the read-back cable can be activated during dormant error detection and the test mode for the test stop can be selected (for further information, see Extended Functions in the "Forced dormant error detection" chapter).

- **Waiting time for test**

  Enter a test time. The test time specifies the maximum waiting time for the transient condition of an external actuator.

- **LED symbol in the F-DO output screen**

  The LED symbol downstream of the AND element indicates the logical state (inactive: gray, active: green).

8.7.3.6 Control interface

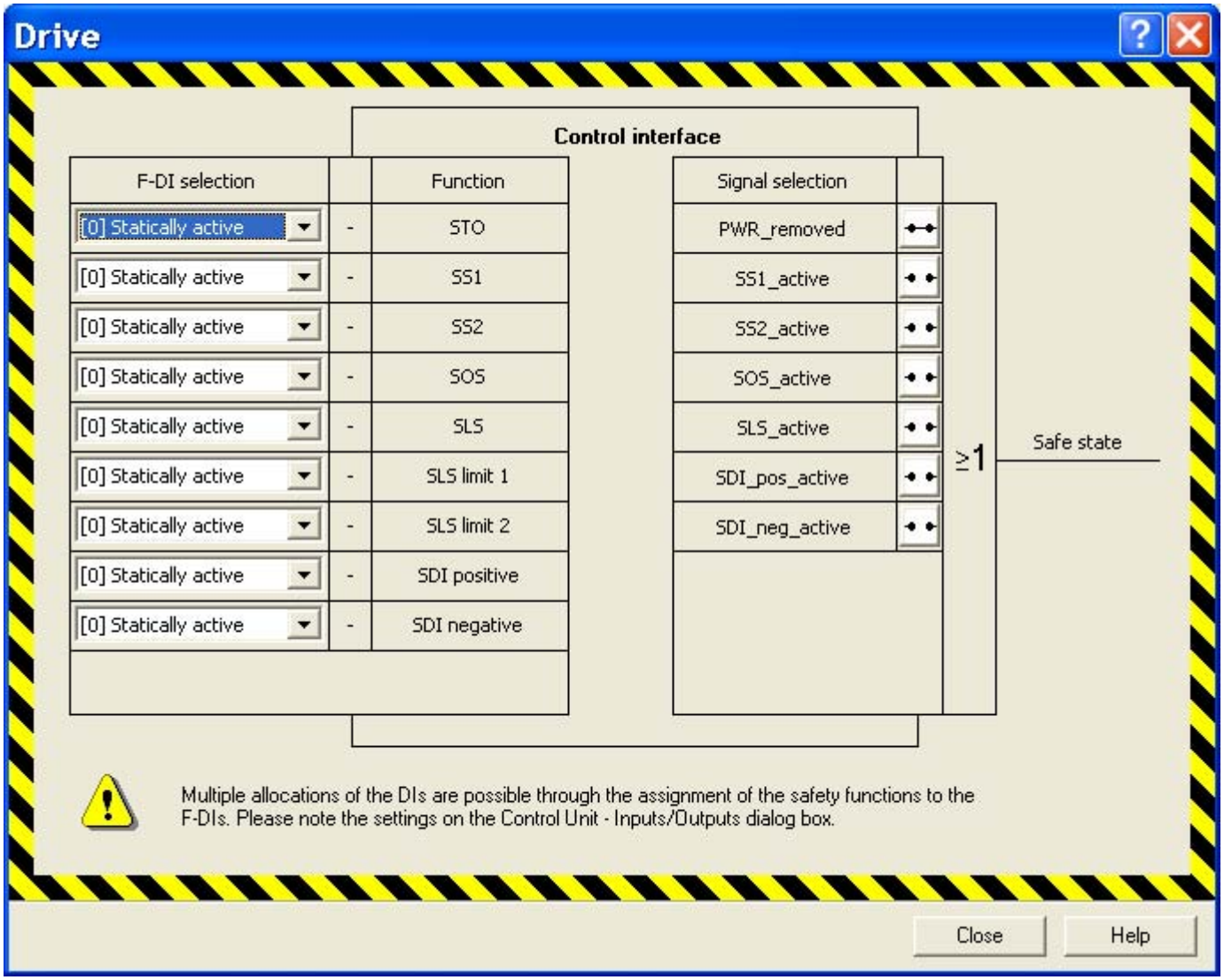

Figure 8-31 Drive screen

Functions of this screen:

- Selection of an F-DI for the STO, SS1, SS2, SOS and SLS functions and for SLS speed limits (bit coded) (p10022 to p10028) and SDI.

  An F-DI can be assigned several functions.

- Configuration of the "Safe State" signal (p10039)

  A failsafe output signal "Safe State" is generated based on the following status signals:

  – STO active (Power_removed)
  – SS1 active
  – SS2 active
  – SOS active
  – SLS active
  – SDI positive
  – SDI negative

  The status signals of individual functions (PWR_removed, SS1 active etc.) are logically linked by OR operation.

8.7.4 PROFIsafe configuration with STARTER

Activating PROFIsafe via the expert list

In order to activate Safety Integrated Functions via PROFIsafe, bit 3 of p9601 and p9801 in the expert list must be set to "1" and bit 2 to "0". Bit 0 must be set to either "1" or "0", depending on whether or not control via terminals is to be enabled in parallel to control via PROFIsafe.

Saving and copying Safety Integrated Functions

After setting the specific parameters for Safety Integrated functions (e.g. the PROFIsafe address), these must be copied from CPU 1 to CPU 2 using the "Copy parameters" button and activated using the "Activate settings" button.

Acceptance test

An acceptance test needs to be carried out once configuration and commissioning are complete (see relevant chapter).

Note

If F parameters of the SINAMICS drive are changed in HW Config, the global signature of the safety program in the SIMATIC F-CPU changes. This means the global signature can be used to identify whether safety-related settings have changed in the F-CPU (F parameters of the SINAMICS slave). However, this global signature does not include the safety-relevant drive parameters so that their change cannot be checked in this way.

8.7.5 Procedure for configuring PROFIsafe communication

Example configuration

The next sections deal with a sample configuration of PROFIsafe communication between a SINAMICS S110 drive unit and higher-level SIMATIC F-CPU operating as PROFIBUS master.

The configuration and operation of failsafe communication (F communication) is based on the following software and hardware requirements:

Required software packages:

- SIMATIC Manager STEP 7 V5.4 SP4 or higher
- S7 F Configuration Pack V5.5 SP5[1)] or higher
- S7 Distributed Safety Programming V5.4 SP5[1)] or higher
- STARTER V4.2 or SIMOTION SCOUT[2)] V4.2
- Drive ES Basic V5.4 SP4 [1)] or higher

  [1)] If using a SIMATIC F-CPU

  2) If SIMOTION SCOUT is used however, SP6 cannot be used

Hardware:

- Safety CPU (F-CPU): e.g. SIMATIC CPU 317F-2

Topology (network view of the project)

Components participating in F communication via PROFIBUS are basically wired as follows:

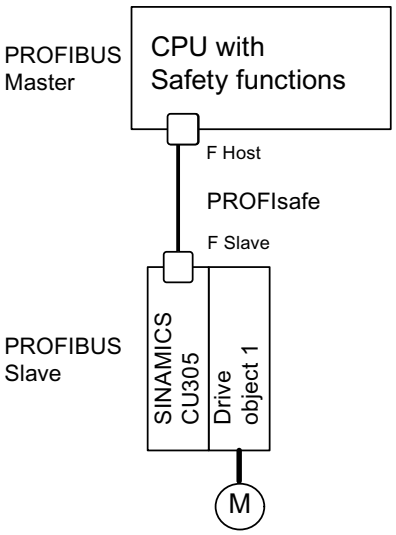

Figure 8-32 Example of a PROFIsafe topology

Configuring PROFIsafe communication

The next sections describe the configuration of PROFIsafe communication between a SIMATIC F-CPU and a drive unit.

Create an F-CPU such as CPU 317F-2 and a SINAMICS S110 in HW Config in accordance with the hardware installed.

1. Set up SINAMICS S110 for operation as a DP slave and the connected F-CPU as associated DP master.
2. In the DP slave properties, the PROFIsafe slot can be inserted by choosing "Insert object" on the "Configuration" tab and configured under "PROFIsafe".
3. The telegram configuration for F communication is displayed in the DP slave properties (SINAMICS S110), "Configuration" tab.

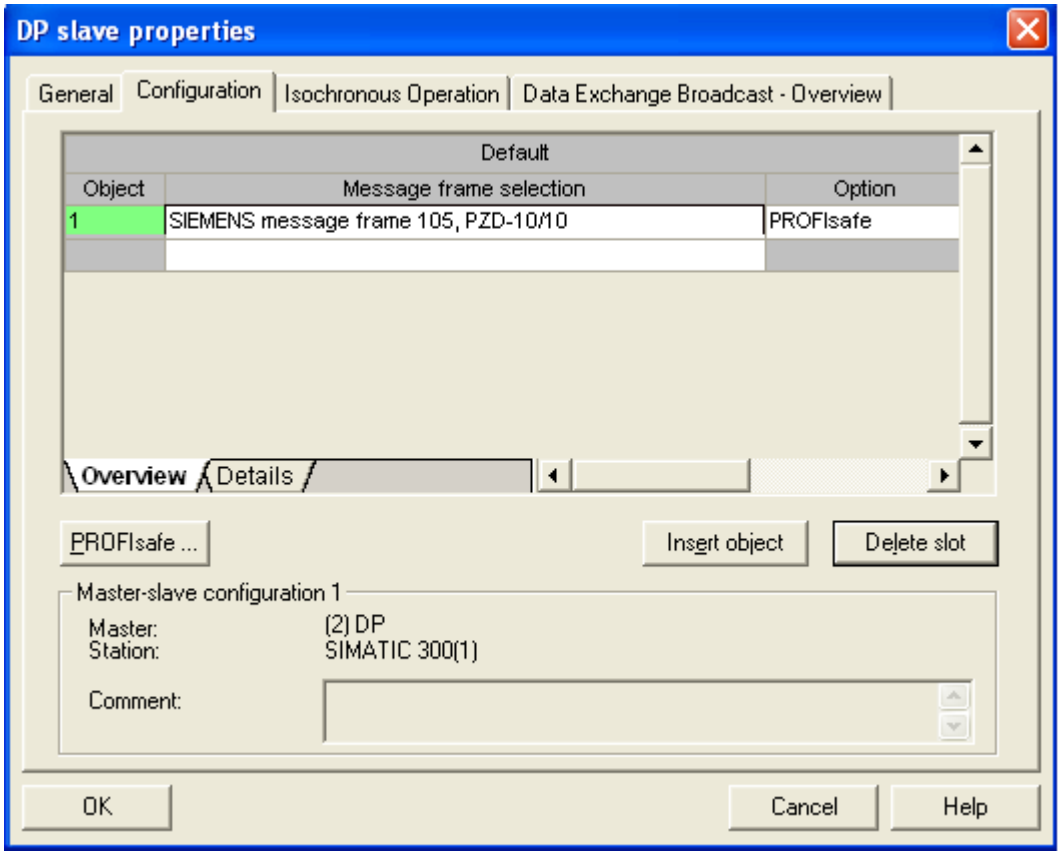

Figure 8-33 Example: PROFIsafe configuration (HW Config)

4. Double-click the icon of the SINAMICS drive unit and select the "Details" tab in the "Configuration" tab.
5. Click "PROFIsafe…" and then define the F parameters which are important to F communication.

Setting F parameters:

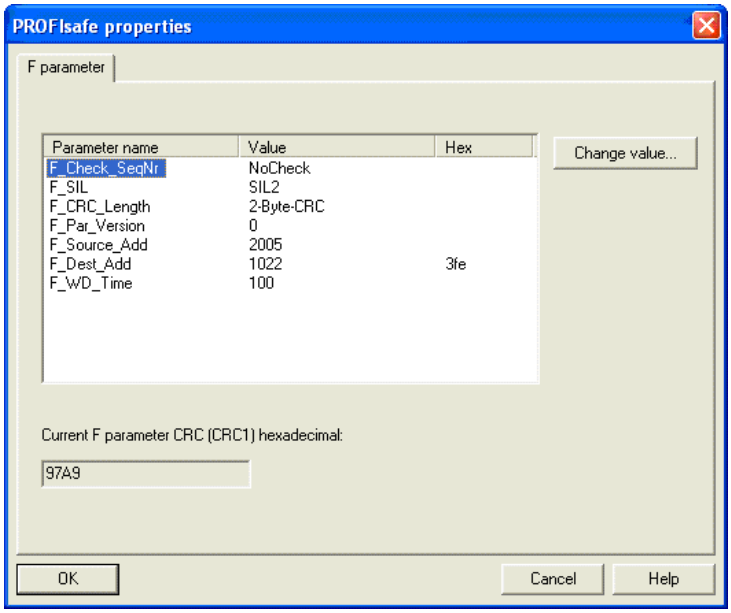

Figure 8-34 PROFIsafe properties (HW Config)

The top five failsafe parameters in this list are configured by default and cannot be edited. The following range of values is valid for the two remaining parameters:

F_Dest_Add: 1-65534
F_Dest_Add determines the PROFIsafe destination address of the drive object.
Any value within the range is allowed, however, it must be entered once again in the safety configuration of the drive in the SINAMICS drive unit. The F_Dest_Add value must be set in p9610 (Control Unit) and in p9810 (Power Module). You can handle these settings quite comfortably using the PROFIsafe STARTER screen (see the picture below). The PROFIsafe target address must be entered in hexadecimal format (in example 008cH).

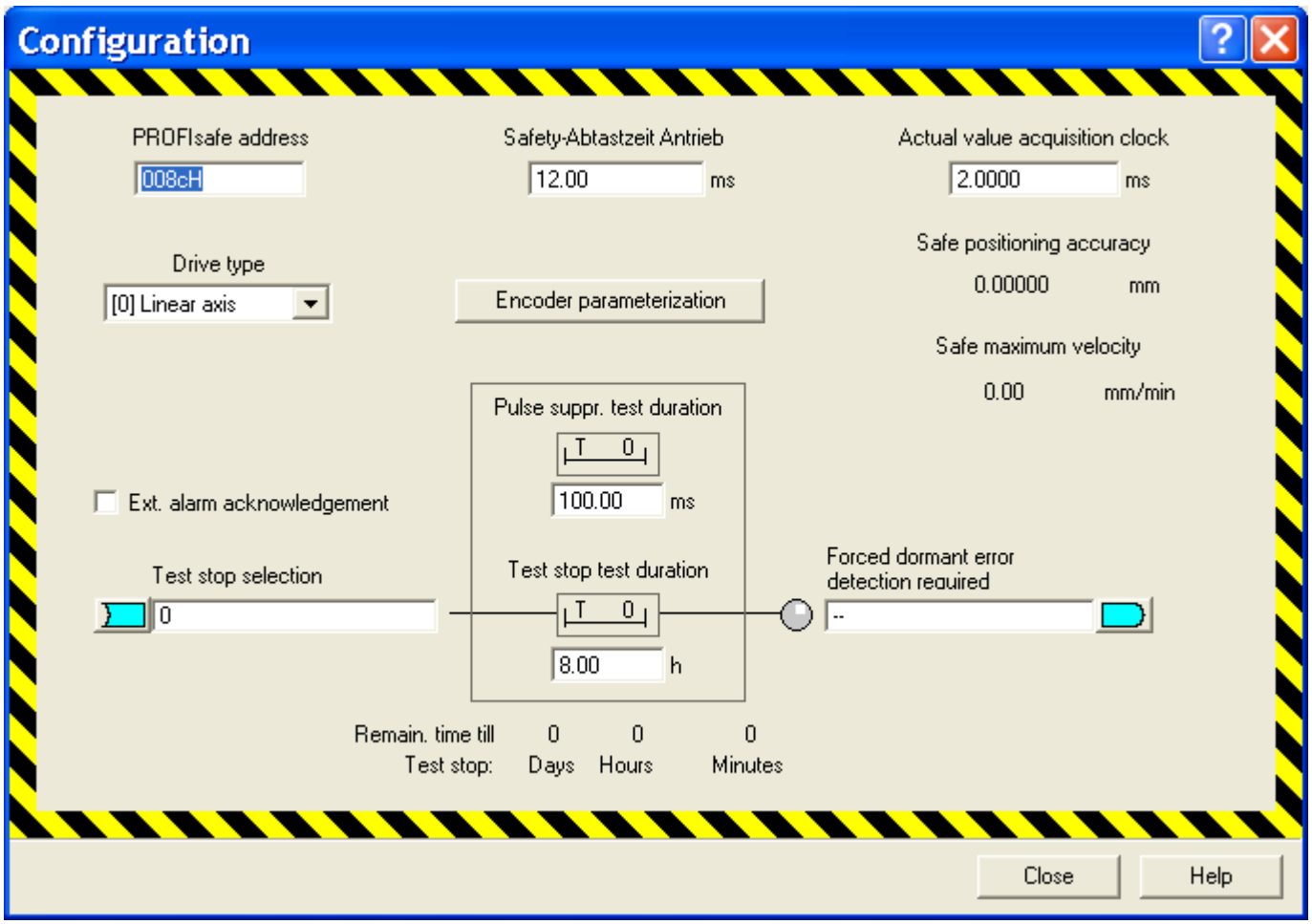

Figure 8-35 STARTER: Configuration "Motion Monitoring via PROFIsafe"

F_WD_Time: 10- 65535
A valid current safety message frame must be received from the F-CPU within the monitoring time. The drive will otherwise go into safe state.
Select a monitoring time of sufficient length to let the communication functions tolerate telegram delays, however, make allowances for appropriate short fault reaction times (e.g. to interruption of communications).

For additional information on failsafe parameters, refer to the online help of the "PROFIsafe properties" dialog box ("Help" button).

8.7.6 Information pertaining to component replacements

Replacing a component from the perspective of Safety Integrated

Note

When replacing certain components (Sensor Modules or motors with DRIVE-CLiQ interface), this process must be acknowledged to safeguard the communication connections to be renewed within the device. When replacing other components, no acknowledgment is required since the communication connections to be renewed are saved automatically.

⚠ WARNING

Observe the instructions with regard to changing or replacing software components in the chapter "Safety instructions".

1. The faulty component was replaced in accordance with safety regulations.
2. Make sure that everybody has cleared the danger zone and then power up the machine.
3. Implementation on the drive object corresponding to the appropriate drive:
   - Fault C30711 with a fault value 1031 is output if a defect in a monitoring channel is recognized after exchanging a Sensor Module.
   - With STARTER/SCOUT:
     - Click on "Acknowledge hardware replacement" in the start screen of the Safety functions. The alarms F01650/F30650 (acceptance test required) are output.
   - If you are working without STARTER for SINAMICS with BOP or for SIMOTION with HMI:
     - Start the copy function for node number (p9700 = 1D hex).
     - Confirm the hardware cyclic redundancy check (p9701 = EC hex).
4. Back up all parameters on the memory card:
   - With BOP: Set p0977 = 1.
   - With STARTER: "Copy RAM to ROM" function.
5. Carry out a POWER ON (power off/on) for all components.

   Note

   In this case, the system will not notify you with a flashing LED that a POWER ON is required.

6. Carry out an acceptance test and acceptance report according to Chapter "Acceptance test and acceptance report" and table "Effect of the acceptance test for certain measures".

⚠ WARNING
Before re-entering the danger area and before resuming operation, a (partial) acceptance test must be carried out for all the drives affected by the component exchange (see the "Acceptance test" chapter).

8.8 Application examples

8.8.1 Input/output interconnections for a safety switching device with CU305

Interconnecting an F-DO with a safe input of a safety device

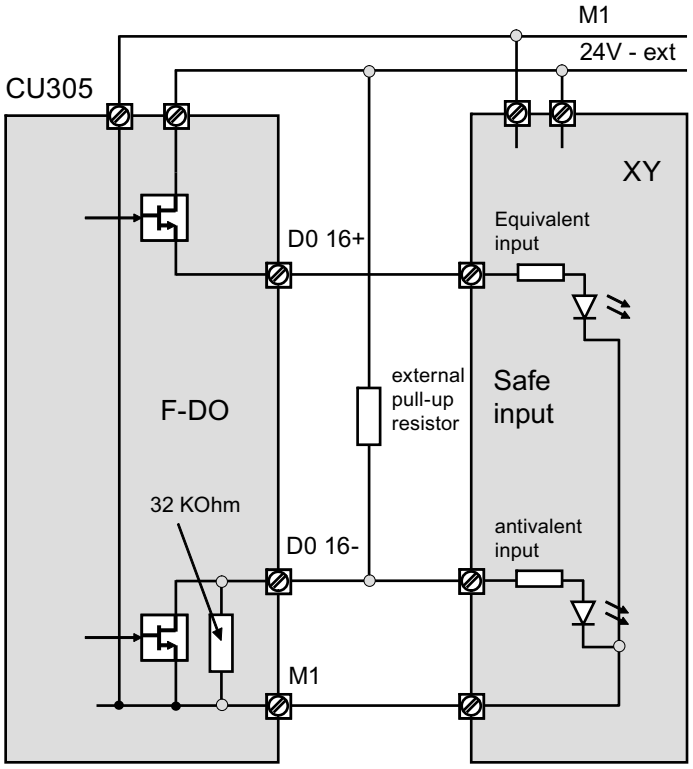

Figure 8-36 F-DO at equivalent/antivalent safe input on safety device XY (e.g. safety PLC)

The external pull-up resistor is only required in exceptional circumstances, see design example at the end of this section.

Interconnecting an F-DI with a plus-minus switching output on a safety device

⚠WARNING

In contrast to mechanical switching contacts (e.g. Emergency Stop switches), leakage currents can still flow in semiconductor switches such as those usually used at digital outputs even when they have been switched off. This can lead to false switching states if digital inputs are not connected correctly.

The conditions for digital inputs/outputs specified in the relevant manufacturer documentation must be observed.

Note

F-DO test pulses

Some safety blocks have F-DOs which emit test pulses for self-test purposes and in order to check the transmission path. These test pulses may trigger false alarms requiring a safe acknowledgment. To avoid these false alarms, discrepancy time p10002 should be set at a sufficiently high level to prevent any interference with the safety function itself. Our experience has shown a setting of approx. 150 ms to be adequate, but it is essential to take into account the description of functions for the F-DO test pulses of the safety control.

⚠WARNING

In accordance with IEC 61131 Part 2, Chapter 5.2 (2008), only outputs that have a maximum residual current of 0.5 mA when "OFF" can be used to connect CU305 digital inputs with digital semiconductor outputs.

Debouncing

Parameter p10017 (SI digital inputs debounce time) can be used to filter out test signals from controls. This avoids faults generated by misinterpretations.

If digital outputs from another device (e.g. F-DO of a safety PLC) with a residual current greater than 0.5 mA in the "OFF" state are connected to the F-DIs of the CU305, then F-DI load resistors should be connected in the appropriate channel.

The maximum permissible voltage for a CU305 F-DI when "OFF" is 5 V (in accordance with IEC 61131-2, 2008).

The following two figures show exactly how the protective circuits for F-DIs with additional load resistors are wired.

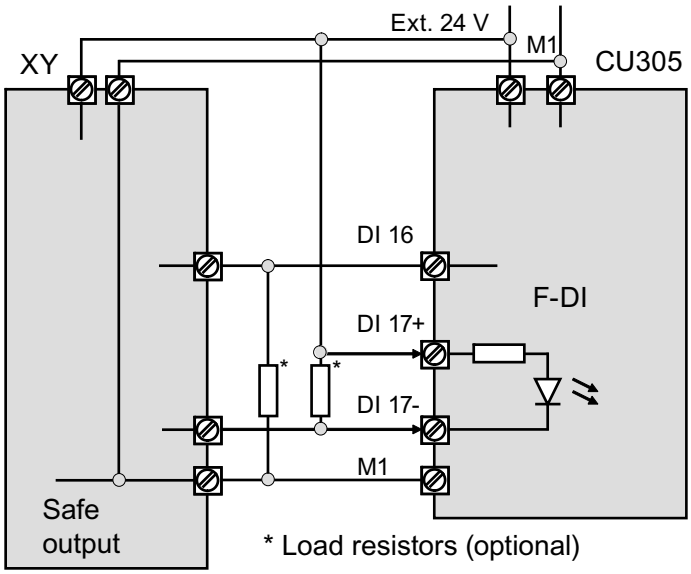

Figure 8-37 F-DI at plus-minus switching safe output on safety device XY (e.g. safety PLC)

Interconnecting an F-DI with a plus-plus switching output on a safety device

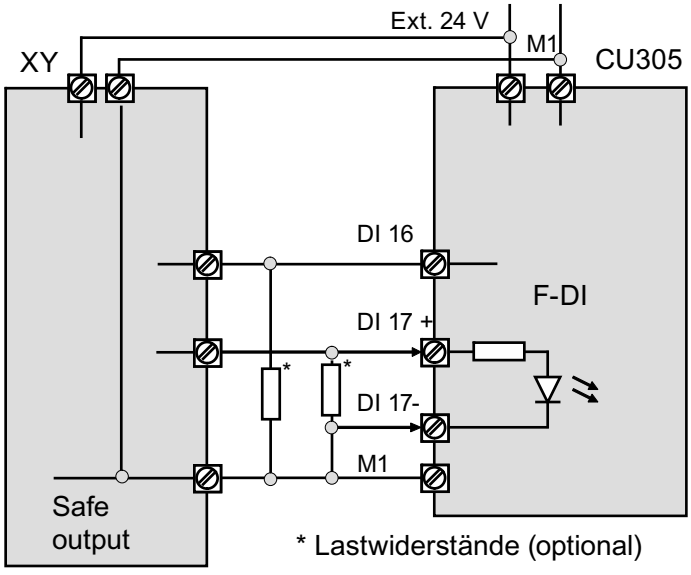

Figure 8-38 F-DI at plus-plus switching safe output on safety device XY (e.g. safety PLC)

Dimensioning of load resistors - example 1:
According to manufacturer documentation, the leakage current of an F-DO on a safety PLC is 1 mA for the P and F channel; in other words, it is 0.5 mA higher than is permissible for the F-DI.
The necessary load resistance is therefore R = 5 V/0.5 mA = 10 kΩ.
At maximum supply voltage, the power loss for this resistor is:
P = (28.8 V)²/R = 83 mW. The resistor is to be permanently dimensioned for this power loss.

Dimensioning of load resistors - example 2:
If further conditions for the digital output (e.g. a minimum load or a maximum load resistance) are specified in the manufacturer documentation, these must also be taken into account.
For example, a load between 12 Ω and 1 kΩ is specified for the SIMATIC ET200S 4 F-DO I/O module (6ES7138-4FB02-0AB0).
Therefore, two additional 1 kΩ load resistors and a continuous load capacity of at least P = (28.8 V)²/R = 830 mW are required to connect an F-DO of this kind to a CU305 F-DI.

If a controlled 24 V power supply is used (e.g. SITOP), a resistor with a significantly lower power loss is sufficient.

Note

Open-circuit detection for pull-up resistors

If the pull-up resistor has a resistance greater than 1 kΩ, open-circuit detection is no longer reliable and has to be switched off.

8.9 Acceptance test and acceptance report

8.9.1 General information

The acceptance test requirements (configuration check) for electrical drive safety functions emanate from DIN EN 61800-5-2, Chapter 7.1 Point f). The acceptance test "configuration check" is named in this standard.

- Description of the application including a picture
- Description of the safety relevant components (including software versions) which are used in the application
- List of the PDS(SR) [Power Drive System(Safety Related)] safety functions used
- Results of all tests of these safety functions, using the specified testing procedure
- List of all safety relevant parameters and their values in the PDS(SR)
- Checksum, test date and confirmation by testing personnel

The acceptance test for systems with Safety Integrated functions (SI functions) is focused on validating the functionality of Safety Integrated monitoring and stop functions implemented in the drive system. The test objective is to verify proper implementation of the defined safety functions and of test mechanisms (forced dormant error detection measures) and to examine the response of specific monitoring functions to the explicit input of values outside tolerance limits. This has to be conducted for all drive-specific Safety Integrated motion monitoring procedures.

⚠ WARNING

A new acceptance test must be carried out if any changes were made to SI function parameters and must be logged in the acceptance report.

Note

The acceptance test is designed to ensure that the safety functions are correctly parameterized. The measured values (e.g. distance, time) and the system behavior identified (e.g. initiation of a specific stop) can be used for checking the plausibility of the configured safety functions. The objective of an acceptance test is to identify potential configuration errors and/or to document the correct function of the configuration. The measured values are typical values (not worst case values). They represent the behavior of the machine at the time of measurement. These measurements cannot be used, for example, to derive maximum values for over-travel.

8.9.2 Acceptance test structure

Authorized person, acceptance report

The test of each SI function must be carried out by an authorized person and logged in the acceptance report. The report must be signed by the person who carried out the acceptance test. The acceptance report must be kept in the logbook of the relevant machine. Access rights to SI parameters must be protected by a password. Only the procedure must be documented in the acceptance report – the password itself must not appear there. Authorized in this sense refers to a person who has the necessary technical training and knowledge of the safety functions and is authorized by the machine manufacturer to carry out the acceptance test.

Note

- Observe the information in the chapter "Procedures for initial commissioning".
- The acceptance report presented below is both an example and recommendation.
- An acceptance report template in electronic format is available at your local Siemens sales office.

Necessity of an acceptance test

A complete acceptance test (as described in this chapter) is required after initial commissioning of Safety Integrated functionality on a machine. Safety-related function expansions, transfer of the commissioning settings to other series machines, hardware changes, software upgrades or similar, permit the acceptance test to be performed with a reduced scope if necessary. A summary of conditions which determine the necessary test scope or proposals in this context is provided below.

In order to define a partial acceptance test, it is necessary in the first instance to specify the acceptance test objects, and in the second instance to define logical groups which represent the elements of the acceptance test. The acceptance test must be carried out separately for each individual drive (as far as the machine allows).

Prerequisites for the acceptance test

- The machine is properly wired.
- All safety equipment such as protective door monitoring devices, light barriers or emergency limit switches are connected and ready for operation.
- Commissioning of the open-loop and closed-loop control should be completed, as e.g. the over-travel distance may otherwise change as a result of a changed dynamic response of the drive control. These include, for example:
  - Configuration of the setpoint channel
  - Position control in the higher-level controller
  - Drive control

Note on the acceptance test mode

The acceptance test mode can be activated for a definable period (p9358/p9558) by setting the appropriate parameters (p9370/p9570). It tolerates specific limit violations during the acceptance test. For instance, the setpoint speed limits are no longer active in the acceptance test mode. To ensure that this state is not accidentally kept, the acceptance test mode is automatically exited after the time set in p9358/p9558.

It is only worth activating acceptance test mode during the acceptance test for functions SS2, SOS, SDI and SLS. It has no effect on other functions.

Normally, SOS can be selected directly or via SS2. In order to also be able to initiate violation of the standstill limits in the SS2 state when the acceptance test mode is active, it deactivates the braking ramp of SS2 so that the motor can be moved. The setpoint is enabled again after the transition into SOS. When an SOS violation is acknowledged in the active acceptance test mode, the current position is adopted as the new stop position so that an SOS violation is not immediately identified again.

⚠WARNING

If a speed setpoint other than zero is present, the active stop function SS2 is set, and the motor is at a standstill (active SOS), the axis starts to move as soon as the acceptance test is activated.

8.9.2.1 Content of the complete acceptance test

A) Documentation

Documentation of the machine and of safety functions

1. Machine description (with overview)
2. Specification of the controller (if this exists)
3. Configuration diagram
4. Function table:
   - Active monitoring functions depending on the operating mode and the protective door,
   - Other sensors with protective functions,
   - The table is part or is the result of the configuring work.
5. SI functions for each drive
6. Information about safety equipment

B) Functional testing of safety functions

Detailed function test and evaluation of SI functions used. For some functions this contains trace recordings of individual parameters. The procedure is described in detail in section Acceptance tests.

1. Test of the SI function "Safe Torque Off" (STO)
   - Required when used in Basic and/or Extended Functions
   - This test is also required if you are not explicitly using STO, but just one function for which STOP A occurs as an error response.

     Alternatively, you can also carry out the quantitative test using STOP A yourself, if you use the tables from sections Acceptance test Safe Torque Off (Basic Functions) (Page 475) , Acceptance test Safe Torque Off with encoder (Extended Functions) (Page 481) or Acceptance test Safe Torque Off without encoder (Extended Functions) (Page 509).
   - You do not need to prepare trace recording for this test.
2. Test of the SI function "Safe Stop 1" (SS1)
   - Required when used in Basic and/or Extended Functions
   - This test is also required if you are not explicitly using SS1, but just one function for which STOP B occurs as an error response.

     Alternatively, you can also carry out the quantitative test using STOP B yourself, if you use the tables from sections Acceptance test for Safe Stop 1 with encoder (Extended Functions) (Page 483) or Acceptance test for Safe Stop 1 without encoder (Extended Functions) (Page 511).
   - Trace recording only required if Extended Functions are used
3. Test of the SI function "Safe Brake Control (SBC)"
   - Required when using Basic and/or Extended Functions
   - You do not need to prepare trace recording for this test.
4. Test of the SI function "Safe Stop 2" (SS2)
   - Only required when used in Extended Functions
   - This test is also required if you are not explicitly using SS2 but just one function for which STOP C occurs as an error response.

     Alternatively, you can also carry out the quantitative test using STOP C yourself, if you use the table from section Acceptance test for Safe Stop 2 (Extended Functions) (Page 486).
   - Trace recording is required

5. Test of the SI function "Safe Operating Stop" (SOS)
   - Only required when used in Extended Functions
   - This test is also required if you are not explicitly using SOS, but just one function for which STOP D or STOP E occurs as an error response.

     Alternatively, you can also carry out the qualitative test using STOP C, STOP D or STOP E yourself, if you use the table from section Acceptance test for Safe Operating Stop (SOS) (Page 489).
   - Trace recording is required
6. Test of the SI function "Safely Limited Speed" (SLS)
   - Only required when used in Extended Functions
   - Trace recordings are required for each SLS limit
7. Test of the SI function "Safe Direction" (SDI)
   - Only required when used in Extended Functions
   - Trace recordings are required for each stop response used
8. Test of the SI function "Safe Speed Monitor" (SSM)
   - Only required when used in Extended Functions
   - Trace recording is required

C) Functional testing of forced dormant error detection

Testing the forced dormant error detection of the safety functions for each control type.

1. Test of the forced dormant error detection of the safety function on the drive
   - If you are using Basic Functions, you need to activate and then deactivate STO once again.
   - If you are using Extended Functions, you need to carry out a test stop.

D) Conclusion of the report

Report of the commissioning status tested and countersignatures

1. Inspection of SI parameters
2. Logging of checksums (for each drive)
3. Issuing of the Safety password and documenting this process (do not specify the Safety password in the report!)
4. RAM to ROM backup, upload of project data to STARTER, and backup of the project
5. Countersignature

8.9.2.2 Content of the partial acceptance test

A) Documentation

Documentation of the machine and of safety functions

1. Extending/changing the hardware data
2. Extending/changing the software data (specify version)
3. Extending/changing the configuration diagram
4. Extending/changing the function table:
   - Active monitoring functions depending on the operating mode and the protective door
   - Other sensors with protective functions
   - The table is part or is the result of the configuring work
5. Extending/changing the SI functions per drive
6. Extending/changing the specifications of the safety equipment

B) Functional testing of safety functions

Detailed function test and evaluation of SI functions used. For some functions this contains trace recordings of individual parameters. The procedure is described in detail in section Acceptance tests.

The function test can be left out if no parameters of the individual safety functions have been changed. In the case that only parameters of individual functions have been changed, only these functions need to be tested anew.

1. Test of the SI function "Safe Torque Off" (STO)
   - Required when used in Basic and/or Extended Functions
   - This test is also required if you are not explicitly using STO, but just one function for which STOP A occurs as an error response.

     Alternatively, you can also carry out the quantitative test using STOP A yourself, if you use the tables from sections Acceptance test Safe Torque Off (Basic Functions) (Page 475) , Acceptance test Safe Torque Off with encoder (Extended Functions) (Page 481) or Acceptance test Safe Torque Off without encoder (Extended Functions) (Page 509).
   - You do not need to prepare trace recording for this test.
2. Test of the SI function "Safe Stop 1" (SS1)
   - Required when used in Basic and/or Extended Functions
   - This test is also required if you are not explicitly using SS1, but just one function for which STOP B occurs as an error response.

     Alternatively, you can also carry out the quantitative test using STOP B yourself, if you use the tables from sections Acceptance test for Safe Stop 1 with encoder (Extended Functions) (Page 483) or Acceptance test for Safe Stop 1 without encoder (Extended Functions) (Page 511).
   - Trace recording only required if Extended Functions are used

3. Test of the SI function "Safe Brake Control (SBC)"
   - Required when using Basic and/or Extended Functions
   - You do not need to prepare trace recording for this test.
4. Test of the SI function "Safe Stop 2" (SS2)
   - Only required when used in Extended Functions
   - This test is also required if you are not explicitly using SS2 but just one function for which STOP C occurs as an error response.

     Alternatively, you can also carry out the quantitative test using STOP C yourself, if you use the table from section Acceptance test for Safe Stop 2 (Extended Functions) (Page 486).
   - Trace recording is required
5. Test of the SI function "Safe Operating Stop" (SOS)
   - Only required when used in Extended Functions
   - This test is also required if you are not explicitly using SOS, but just one function for which STOP D or STOP E occurs as an error response.

     Alternatively, you can also carry out the qualitative test using STOP C, STOP D or STOP E yourself, if you use the table from section Acceptance test for Safe Operating Stop (SOS) (Page 489).
   - Trace recording is required
6. Test of the SI function "Safely Limited Speed" (SLS)
   - Only required when used in Extended Functions
   - A trace recording is required for each SLS limit
7. Test of the SI function "Safe Direction" (SDI)
   - Only required when used in Extended Functions
   - Trace recordings are required for each stop response used
8. Test of the SI function "Safe Speed Monitor" (SSM)
   - Only required when used in Extended Functions
   - Trace recording is required

C) Functional testing of forced dormant error detection

Testing the forced dormant error detection of the safety functions for each control type.

1. Test of the forced dormant error detection of the safety function on the drive
   - If you are using Basic Functions, you need to activate and then deactivate STO once again.
   - If you are using Extended Functions, you need to carry out a test stop.

D) Functional testing of actual value acquisition

1. General testing of actual value acquisition
   - After exchanging a hardware component, initial activation and brief operation in both directions.

⚠ WARNING
During this process, all personnel must keep out of the danger area.

2. Test of failsafe actual value acquisition
   - Only necessary if Extended Functions are used
   - If the motion monitoring functions are activated (e.g. SLS or SSM with hysteresis), briefly operate the drive in both directions.

E) Conclusion of the report

Report of the commissioning status tested and countersignatures

1. Extension of checksums (for each drive)
2. Countersignature

8.9.2.3 Test scope for specific measures

Table 8- 21 Scope of partial acceptance tests for specific measures

Measure	A) Documentation	B) Functional testing of safety functions	C) Functional testing of forced dormant error detection	D) Functional testing of actual value acquisition	E) Conclusion of the report
Replacement of the encoder system	Yes, Points 1 and 2	No	No	Yes	Yes
Replacement of an SMC/SME	Yes, Points 1 and 2	No	No	Yes	Yes
Replacement of a motor with DRIVE-CLiQ	Yes, Points 1 and 2	No	No	Yes	Yes
Replacement of the Control Unit / power unit hardware	Yes, Points 1 and 2	No	Yes, only Point 1	Yes, only Point 1	Yes
Replacement of the Power Module or Safe Brake Relay	Yes, Points 1 and 2	Yes, Points 1 or 2 and 3	Yes, only Point 1	Yes, only Point 1	Yes
Firmware - upgrade(CU / power unit/ Sensor Modules)	Yes, only Point 2	Yes, if new safety functions are to be used	Yes	Yes, only Point 1	Yes
Change to a single parameter of a safety function (e.g. SLS limit)	Yes, Points 4 and 5.	Yes, test the appropriate function	No	Yes	Yes
Transfer of project data to other machines (series commissioning)	Yes	Yes, but only testing of the selection of the safety functions	Yes	Yes	Yes

Note

Forced dormant error detection functional testing (C) and actual value acquisition functional testing (D) together represent the "simplified function test" mentioned in previous chapters.

8.9.3 Safety logbook

The "Safety Logbook" function is used to detect changes to safety parameters that affect the associated CRC sums. CRCs are only generated when p9601/p9801 (SI enable drive-integrated functions CPU 1/2) is > 0.

Data changes are detected when the CRCs of the SI parameters change. Each SI parameter change that is to become active requires the reference CRC to be changed so that the drive can be operated without SI fault messages. In addition to functional safety changes, safety changes as a result of hardware being replaced can be detected when the CRC has changed.

The following changes are recorded by the safety logbook:

- Functional changes are recorded in the checksum r9781[0]:
  - Functional CRCs of the motion monitoring functions (p9729[0]), axial (Extended Functions)
  - Functional CRCs of the drive-integrated Basic Safety functions (p9799, SI setpoint checksum SI parameters (Control Unit)), axial
  - Enabling of functions integrated in the drive (p9601), axial (Basic and Extended Functions)
- Hardware-dependent changes are recorded in the checksum r9781[1]:
  - Hardware-dependent CRC of the motion monitoring functions (p9729[2]), axial (Extended Functions)

8.9.4 Acceptance reports

8.9.4.1 Plant description - Documentation part 1

Table 8- 22 Machine description and overview diagram

Designation	
Type	
Serial number	
Manufacturer	
End customer	
Electrical drives	
Other drives	
Overview diagram of machine	

Table 8- 23 Values of relevant parameters

Versions of the firmware and of Safety Integrated			
Component	**DO number**	**Firmware version**	**SI version**
Parameters Control Unit		r0018 =	r9590 = r9770 = Note: Parameters can be found in the drive.
	DO number	**Firmware version**	**SI version**
Parameter Sensor Module		r0148 =	r9890 =
Monitoring clock cycles of Safety Integrated			
	DO number	**SI monitoring clock cycle Control Unit**	**SI monitoring clock cycle Motor Module**
Basic Functions		r9780 =	r9880 =
	DO number	**SI monitoring clock cycle Motor Module**	**SI monitoring clock cycle Control Unit**
Extended Functions		p9300 =	p9500 =

8.9.4.2 Description of safety functions - Documentation Part 2

Introduction

Note

This description of a system is for illustration purposes only. In each case, the actual settings for the system concerned will need to be modified as required.

Function table

Table 8- 24 Example table: Active monitoring functions depending on the operating mode, the protective doors or other sensors

Mode of operation	Protective door	Drive	Status of monitoring functions
Production	closed and locked	1	All deselected
	unlocked	1	SOS selected
Setup	closed and locked	1	All deselected
	unlocked	1	SLS 1 deselected
...	...	...	...

Safety Integrated functions used

Table 8- 25 Example: functional overview of the safety functions

Drive	SI function	Limit	Active if
1	SOS	100 mm	refer to the function table
	SLS 1	200000 mm/min	refer to the function table
2	SOS	100 °	refer to the function table
	SLS 1	50 rpm	refer to the function table
...	...	...	...

Comments:

The drive uses SI function SS1 for the EMERGENCY STOP functionality.

Drive-specific Safety parameters

Table 8- 26 Drive-specific data

SI function	Parameter processor 2 / processor 1	Value CPU 2 ≙ CPU 1
Enable safety functions	p9301 / p9501	0000 bin
Axis type	p9302 / p9502	0
Function specification	p9306 / p9506	0
Function configuration	p9307 / p9507	0000 bin
Behavior during pulse cancellation	p9309 / p9509	0
Actual value acquisition clock cycle	p9311 / p9511	0.0 ms
Coarse position value configuration	p9315 / p9515	0000 bin
Encoder configuration, safety functions	p9316 / p9516	0000 bin
Linear scale graduations	p9317 / p9517	10 nm
Encoder pulses per revolution	p9318 / p9518	2048
Fine resolution G1_XIST1	p9319 / p9519	11
Leadscrew pitch	p9320 / p9520	10 mm
Gearbox encoder (motor) / load denominator	p9321[0] / p9521[0] p9321[1] / p9521[1] p9321[2] / p9521[2] p9321[3] / p9521[3] p9321[4] / p9521[4] p9321[5] / p9521[5] p9321[6] / p9521[6] p9321[7] / p9521[7]	1 1 1 1 1 1 1 1
Gearbox encoder (motor) / load numerator	p9322[0] / p9522[0] p9322[1] / p9522[1] p9322[2] / p9522[2] p9322[3] / p9522[3] p9322[4] / p9522[4] p9322[5] / p9522[5] p9322[6] / p9522[6] p9322[7] / p9522[7]	1 1 1 1 1 1 1 1
Redundant coarse position value valid bits	p9323 / p9523	9
Redundant coarse position value fine resolution bits	p9324 / p9524	-2
Redundant coarse position value relevant bits	p9325 / p9525	16
Encoder assignment	p9326 / p9526	1

SI function	Parameter processor 2 / processor 1	Value CPU 2 ≙ CPU 1
Sensor Module node identifier	p9328[0] p9328[1] p9328[2] p9328[3] p9328[4] p9328[5] p9328[6] p9328[7] p9328[8] p9328[9] p9328[10] p9328[11]	0000 hex 0000 hex 0000 hex 0000 hex 0000 hex 0000 hex 0000 hex 0000 hex 0000 hex 0000 hex 0000 hex 0000 hex
SI Motion Gx_XIST1 coarse position safety most significant bit	p9329 / p9529	14
SOS standstill tolerance	p9330 / p9530	1.000°
PLC limit values	p9331[0] / p9531[0] p9331[1] / p9531[1] p9331[2] / p9531[2] p9331[3] / p9531[3]	2000.00 mm/min 2000.00 mm/min 2000.00 mm/min 2000.00 mm/min
Actual value comparison tolerance	p9342 / p9542	0.1000°
SSM Filter time	p9345 / p9545	0.0 ms
SSM speed limit	p9346 / p9546	20.00 mm/min
SSM speed hysteresis	p9347 / p9547	10 mm/min
SAM actual speed tolerance	p9348 / p9548	300.00 rpm
Slip speed tolerance	p9349 / p9549	6.0 rpm
SLS changeover delay time	p9351 / p9551	100.00 ms
STOP C -> SOS delay time	p9352 / p9552	100.00 ms
STOP D -> SOS delay time	p9353 / p9553	100.00 ms
STOP E -> SOS transition time	p9354 / p9554	100.00 µs
STOP F -> STOP B delay time	p9355 / p9555	0.00 ms
Pulse cancelation delay time	p9356 / p9556	100.00 ms
Pulse suppression test time	p9357 / p9557	100.00 ms
Acceptance test mode time limit	p9358 / p9558	40000.00 ms
Pulse suppression shutdown speed	p9360/p9560	0.0 rpm
PLC stop response	p9363[0] / p9563[0] p9363[1] / p9563[1] p9363[2] / p9563[2] p9363[3] / p9563[3]	2 2 2 2
SDI tolerance	p9364 / p9564	0.1 mm
SDI delay time	p9365 / p9565	10.00 µs
SDI stop response	p9366 / p9566	1
SAM speed limit	p9368 / p9568	0.0 mm/min

SI function	Parameter processor 2 / processor 1	Value CPU 2 ≙ CPU 1
Forced dormant error detection timer	p9559	8.00 h
Pulse suppression delay bus failure	p9380 / p9580	100.00 µs
Brakeramp reference value	p9381 / p9581	1500 rpm
Brake ramp delay time	p9382 / p9582	250 ms
Brake ramp monitoring time	p9383 / p9583	10.00 s
Evaluation delay time without encoder	p9386 / p9586	100.00 ms
Actual value acquisition without encoder filter time	p9387 / p9587	100.00 µs
Minimum current actual value acquisition without encoder	p9388 / p9588	10.00 %
Acceleration voltage tolerance	p9389 / p9589	100.00 %
Test stop signal source	p9705	1:722:5
Enable drive-integrated functions	p9801 / p9601	0000 bin
Enable safe brake control	p9802 / p9602	0
PROFIsafe address	p9810 / p9610	0000 hex
SGE changeover tolerance time	p9850 / p9650	500.00 ms
STO/SBC/SS1 debounce time	p9851 / p9651	0.00 ms
Safe Stop 1 delay time	p9852 / p9652	0.00 s
STOP F -> STOP A delay time	p9858 / p9658	0.00 µs
Forced dormant error detection timer	p9659	8.00 h

Safety equipment

Protective door The protective door is unlocked by means of single-channel request key
Protective door switch The protective door is equipped with a safety door switch. The safety door switch returns the dual-channel signal "Door closed and locked". Changeover and selection of safety functions in accordance with the table shown above.
Mode selector switch The "Production" and "Setup" modes are set by means of a mode selector switch. The key switch features two contact levels. Changeover and selection of safety functions in accordance with the table shown above.
EMERGENCY-STOP pushbutton The dual-channel EMERGENCY-STOP pushbuttons are wired in series. The EMERGENCY STOP signal activates SS1 for all drives. Then the external brakes and STO are activated.
Test stop Activation by means of: • Machine power on • Unlocking the protective door

Control of SI functions by way of PROFIsafe

Documentation of the parameters

Table 8- 27 Parameters for control by way of PROFIsafe

Functionality	Parameters	Value

8.9.5 Acceptance tests

Note

As far as possible, the acceptance tests are to be carried out at the maximum possible machine speed and acceleration rates to determine the maximum braking distances and braking times that can be expected.

Note

If Basic Functions and Extended Functions are combined, the acceptance test for both types must be carried out for the functions used.

Note

The trace recordings for the Extended Functions aid evaluation of the more complex functionality compared to the Basic Functions (for which trace recording is not required). Where necessary you can also use other recording options (e.g. via HMI).

Note

Non-critical alarms

When evaluating the alarm buffer you can tolerate the following alarms:

- A01697 SI Motion: Motion monitoring test required
- A01796 SI Motion CU: Waiting for communication

These alarms occur after every system startup and can be evaluated as non-critical. You do not need to include these alarms in the acceptance report.

8.9.5.1 Acceptance tests – Basic Functions

Acceptance test Safe Torque Off (Basic Functions)

Table 8- 28 "Safe Torque Off" acceptance test

No.	Description	Status
Note: The acceptance test must be individually conducted for each configured control. The control can be realized via terminals and/or via PROFIsafe.		
1.	Initial state	
	• Drive in "Ready" state (p0010 = 0)	
	• STO function enabled (on-board terminals / PROFIsafe p9601.0 = 1 or p9601.3 = 1)	
	• No Safety faults and alarms (r0945[0...7], r2122[0...7]); see note "Non-critical alarms" in section Acceptance tests (Page 474).	
	• r9772.17 = r9872.17 = 0 (STO deselection via terminals - DI CU / EP terminal Motor Module); only relevant for STO via terminal	
	• r9772.20 = r9872.20 = 0 (STO deselection via PROFIsafe); only relevant for STO via PROFIsafe	
	• r9772.0 = r9772.1 = 0 (STO deselected and inactive – P1)	
	• r9872.0 = r9872.1 = 0 (STO deselected and inactive – P2)	
	• r9773.0 = r9773.1 = 0 (STO deselected and inactive – P1 + P2)	
2.	Run the drive	
	• Ensure that the correct drive is running	
	Select STO when you issue the traversing command and check the following:	
	• The drive coasts to a standstill or is braked and stopped by the mechanical brake (if available and configured (p1215, p9602, p9802)).	
	• No Safety faults and alarms (r0945[0..7], r2122[0..7])	
	• r9772.17 = r9872.17 = 1 (STO selection via terminal - DI CU / EP terminal Motor Module); only relevant for STO via terminal	
	• r9772.20 = r9872.20 = 1 (STO selection via PROFIsafe); only relevant for STO via PROFIsafe	
	• r9772.0 = r9772.1 = 1 (STO selected and active – P1)	
	• r9872.0 = r9872.1 = 1 (STO selected and active – P2)	
	• r9773.0 = r9773.1 = 1 (STO selected and active – P1 + P2)	

No.	Description	Status
3.	Deselect STO and check the following:	
	• No Safety faults and alarms (r0945[0..7], r2122[0..7])	
	• r9772.17 = r9872.17 = 0 (STO deselection via terminals - DI CU / EP terminal Motor Module); only relevant for STO via terminal	
	• r9772.20 = r9872.20 = 0 (STO deselection via PROFIsafe); only relevant for STO via PROFIsafe	
	• r9772.0 = r9772.1 = 0 (STO deselected and inactive – P1)	
	• r9872.0 = r9872.1 = 0 (STO deselected and inactive – P2)	
	• r9773.0 = r9773.1 = 0 (STO deselected and inactive – P1 + P2)	
	• r0046.0 = 1 (drive in "Switching On Inhibited" status)	
4.	Acknowledge "Switching On Inhibited" and run the drive. Ensure that the correct drive is running.	
	The following is tested: • Correct DRIVE-CLiQ wiring between Control Unit and Motor Modules • Correct assignment of drive No. – Motor Module – motor • The hardware is functioning properly • Correct wiring of the switch-off signal path (only via terminal) • Correct assignment of the terminals for STO on the Control Unit • Correct parameterization of the STO function • Forced checking procedure of the shutdown paths	

Acceptance test for Safe Stop 1 (Basic Functions)

Table 8- 29 "Safe Stop 1" function

No.	Description	Status
Note: The acceptance test must be individually conducted for each configured control. The control can be realized via terminals and/or via PROFIsafe.		
1.	Initial state	
	• Drive in "Ready" state (p0010 = 0)	
	• STO function enabled (on-board terminals / PROFIsafe p9601.0 = 1 or p9601.3 = 1)	
	• Enable SS1 function (p9652 > 0, p9852 > 0)	
	• No Safety faults and alarms (r0945[0...7], r2122[0...7]); see note "non-critical alarms" in section Acceptance tests (Page 474).	
	• r9772.22 = r9872.22 = 0 (SS1 deselection via terminals – DI CU / EP terminal Motor Module); only relevant for SS1 via terminal	
	• r9772.23 = r9872.23 = 0 (SS1 deselection via PROFIsafe); only relevant for SS1 via PROFIsafe	
	• r9772.0 = r9772.1 = 0 (STO deselected and inactive – P1)	
	• r9772.5 = r9772.6 = 0 (SS1 deselected and inactive – P1)	
	• r9872.0 = r9872.1 = 0 (STO deselected and inactive – P2)	
	• r9872.5 = r9872.6 = 0 (SS1 deselected and inactive – P2)	
	• r9773.0 = r9773.1 = 0 (STO deselected and inactive – P1 + P2)	
	• r9773.5 = r9773.6 = 0 (SS1 deselected and inactive – P1 + P2)	
2.	Run the drive	
	Check whether the correct drive is operational	
	Select SS1 when you issue the traversing command and check the following:	
	• The drive is braked along the OFF3 ramp (p1135)	
	Before the SS1 delay time (p9652, p9852) expires, the following applies:	
	• r9772.22 = r9872.22 = 1 (SS1 selection via terminals – DI CU / EP terminal Motor Module); only relevant for SS1 via terminal	
	• r9772.23 = r9872.23 = 1 (SS1 selection via PROFIsafe); only relevant for SS1 via PROFIsafe	
	• r9772.0 = r9772.1 = 0 (STO deselected and inactive – P1)	
	• r9772.5 = r9772.6 = 1 (SS1 selected and active – P1)	
	• r9872.0 = r9872.1 = 0 (STO deselected and inactive – P2)	
	• r9872.5 = r9872.6 = 1 (SS1 selected and active – P2)	
	• r9773.0 = r9773.1 = 0 (STO deselected and inactive – P1 + P2)	
	• r9773.5 = r9773.6 = 1 (SS1 selected and active – P1 + P2)	

No.	Description	Status
	STO is initiated after the SS1 delay time expires (p9652, p9852).	
	• No Safety faults and alarms (r0945[0...7], r2122[0...7])	
	• r9772.0 = r9772.1 = 1 (STO selected and active – P1)	
	• r9772.5 = r9772.6 = 1 (SS1 selected and active – P1)	
	• r9872.0 = r9872.1 = 1 (STO selected and active – P2)	
	• r9872.5 = r9872.6 = 1 (SS1 selected and active – P2)	
	• r9773.0 = r9773.1 = 1 (STO selected and active – P1 + P2)	
	• r9773.5 = r9773.6 = 1 (SS1 selected and active – P1 + P2)	
3.	Canceling SS1	
	• No Safety faults and alarms (r0945[0...7], r2122[0...7])	
	• r9772.22 = r9872.22 = 0 (SS1 deselection via terminals – DI CU / EP terminal Motor Module); only relevant for SS1 via terminal	
	• r9772.23 = r9872.23 = 0 (SS1 deselection via PROFIsafe); only relevant for SS1 via PROFIsafe	
	• r9772.0 = r9772.1 = 0 (STO deselected and inactive – P1)	
	• r9772.5 = r9772.6 = 0 (SS1 deselected and inactive – P1)	
	• r9872.0 = r9872.1 = 0 (STO deselected and inactive – P2)	
	• r9872.5 = r9872.6 = 0 (SS1 deselected and inactive – P2)	
	• r9773.0 = r9773.1 = 0 (STO deselected and inactive – P1 + P2)	
	• r9773.5 = r9773.6 = 0 (SS1 deselected and inactive – P1 + P2)	
	• r0046.0 = 1 (drive in "Switching On Inhibited" status)	
4.	Acknowledge "Switching On Inhibited" and run the drive. Ensure that the correct drive is running.	
	The following is tested: • Correct parameterization of the SS1 function	

Acceptance test for Safe Brake Control (Basic Functions)

Table 8- 30 "Safe Brake Control" function

No.	Description	Status
Note: The acceptance test must be individually conducted for each configured control. The control can be realized via terminals and/or via PROFIsafe.		
1.	Initial state	
	• Drive in "Ready" state (p0010 = 0)	
	• STO function enabled (on-board terminals / PROFIsafe p9601.0 = 1 or p9601.3 = 1)	
	• Enable SBC function (p9602 = 1, p9802 = 1)	
	• Brake as in sequence control or brake always released (p1215 = 1 or p1215 = 2)	
	• No Safety faults and alarms (r0945, r2122); see note "Non-critical alarms" in section Acceptance tests (Page 474).	
	• r9772.4 = r9872.4 = 0 (SBC not requested)	
	• r9772.0 = r9772.1 = 0 (STO deselected and inactive – P1)	
	• r9872.0 = r9872.1 = 0 (STO deselected and inactive – P2)	
	• r9773.0 = r9773.1 = 0 (STO deselected and inactive – v)	
2.	Run drive (if applied, brake is released)	
	• Check whether the correct drive is operational	
	Select STO/SS1 when you issue the traversing command and check the following:	
	• The brake is applied (for SS1 the drive is previously decelerated along the OFF3 ramp)	
	• No Safety faults and alarms (r0945[0...7], r2122[0...7])	
	• r9772.4 = r9872.4 = 1 (SBC requested)	
	• r9772.0 = r9772.1 = 1 (STO selected and active – P1)	
	• r9872.0 = r9872.1 = 1 (STO selected and active – P2)	
	• r9773.0 = r9773.1 = 1 (STO selected and active – P1 + P2)	
3.	Deselect STO/SS1 and check the following:	
	• No Safety faults and alarms (r0945[0...7], r2122[0...7])	
	• r9772.4 = r9872.4 = 0 (deselect SBC)	
	• r9772.0 = r9772.1 = 0 (STO deselected and inactive – P1)	
	• r9872.0 = r9872.1 = 0 (STO deselected and inactive – P2)	
	• r9773.0 = r9773.1 = 0 (STO deselected and inactive – P1 + P2)	
	• r0046.0 = 1 (drive in "Switching On Inhibited" status)	

No.	Description	Status
4.	Acknowledge "Switching On Inhibited" and run the drive. Check whether the correct drive is operational.	
	The following is tested: • The brake is connected properly • The hardware is functioning properly • The SBC is parameterized correctly • Forced dormant error detection for the brake control	

8.9.5.2 Acceptance tests for Extended Functions (with encoder)

Acceptance test Safe Torque Off with encoder (Extended Functions)

Table 8- 31 "Safe Torque Off" function

No.	Description	Status
Notes: The acceptance test must be individually conducted for each configured control. The control can be realized via terminals or via PROFIsafe.		
1.	Initial state	
	• Drive in "Ready" state (p0010 = 0)	
	• Safety Integrated Extended Functions enabled (p9601.2 = 1)	
	• Safety functions enabled (p9501.0 = 1)	
	• No Safety faults and alarms (r0945[0...7], r2122[0...7], r9747[0...7]); see note "Non-critical alarms" in section Acceptance test.	
	• r9772.18 = r9872.18 = 0 (STO deselected via Safe Motion Monitoring)	
	• r9772.0 = r9772.1 = 0 (STO deselected and inactive – P1)	
	• r9872.0 = r9872.1 = 0 (STO deselected and inactive – P2)	
	• r9773.0 = r9773.1 = 0 (STO deselected and inactive – P1 + P2)	
	• r9720.0 = 1 (STO deselected)	
	• r9722.0 = 0 (STO inactive)	
2.	Run the drive	
	• Check whether the correct drive is operational	
	Select STO when you issue the traversing command and check the following:	
	• The drive coasts to a standstill or is braked and stopped by the mechanical brake (if available and configured (p1215, p9602, p9802)).	
	• No Safety faults and alarms (r0945[0...7], r2122[0...7], r9747[0...7])	
	• r9772.18 = r9872.18 = 1 (STO selected via Safe Motion Monitoring)	
	• r9772.0 = r9772.1 = 1 (STO selected and active – P1)	
	• r9872.0 = r9872.1 = 1 (STO selected and active – P2)	
	• r9773.0 = r9773.1 = 1 (STO selected and active – P1 + P2)	
	• r9720.0 = 0 (STO selected)	
	• r9722.0 = 1 (STO active)	

No.	Description	Status
3.	Deselect STO and check the following:	
	• No Safety faults and alarms (r0945[0...7], r2122[0...7], r9747[0...7])	
	• r9772.18 = r9872.18 = 0 (STO deselected via Safe Motion Monitoring)	
	• r9772.0 = r9772.1 = 0 (STO deselected and inactive – P1)	
	• r9872.0 = r9872.1 = 0 (STO deselected and inactive – P2)	
	• r9773.0 = r9773.1 = 0 (STO deselected and inactive – P1 + P2)	
	• r9720.0 = 1 (STO deselected)	
	• r9722.0 = 0 (STO inactive)	
	• r0046.0 = 1 (drive in "Switching On Inhibited" status)	
4.	Acknowledge "Switching On Inhibited" and run the drive. Ensure that the correct drive is running.	
	The following is tested: • Correct DRIVE-CLiQ wiring between Control Unit and Motor Modules • Correct assignment of drive No. – Motor Module – motor • The hardware is functioning properly • Correct parameterization of the STO function • Forced dormant error detection of the switch-off signal paths	

Acceptance test for Safe Stop 1 with encoder (Extended Functions)

Table 8- 32 "Safe Stop 1" function

No.	Description	Status
Note: The acceptance test must be individually conducted for each configured control. The control can be realized via terminals or via PROFIsafe.		
1.	Initial state	
	• Drive in "Ready" state (p0010 = 0)	
	• Safety Integrated Extended Functions enabled (p9601.2 = 1)	
	• Safety functions enabled (p9501.0 = 1)	
	• No Safety faults and alarms (r0945[0...7], r2122[0...7], r9747[0...7]); see note "non-critical alarms" in section Acceptance test.	
2.	Run the drive	
	• Check whether the correct drive is operational	
3.	Configure and activate trace recording.	
	• Trigger: Trigger on variable - bit pattern (r9720.1 = 0)	
	• Record the following values: r9714[0], r9714[1], r9720, r9722	
	• Select the time interval and pretrigger so you can recognize the selection of SS1 and the transition into the subsequent STO state	
	For better analysis, display the following bit values:	
	• r9720.1 (deactivation SS1)	
	• r9722.0 (STO active)	
	• r9722.1 (SS1 active)	
	Select SS1 while the drive is moving	
	• The drive decelerates along the OFF3 ramp	
	• Subsequent state STO is activated	
4.	Analyze trace:	
	• The STO is triggered after the SS1 timer (p9356/9556) has expired or if the speed drops below the shutdown speed (p9360/9560)	
5.	Save/print the trace and add it to the acceptance report (refer to the example below)	
6.	Deselect SS1	
	• No Safety faults and alarms (r0945[0...7], r2122[0...7], r9747[0...7])	
	Acknowledge "Switching On Inhibited" and run the drive	
	• Ensure that the correct drive is running	

Example Trace SS1 with encoder

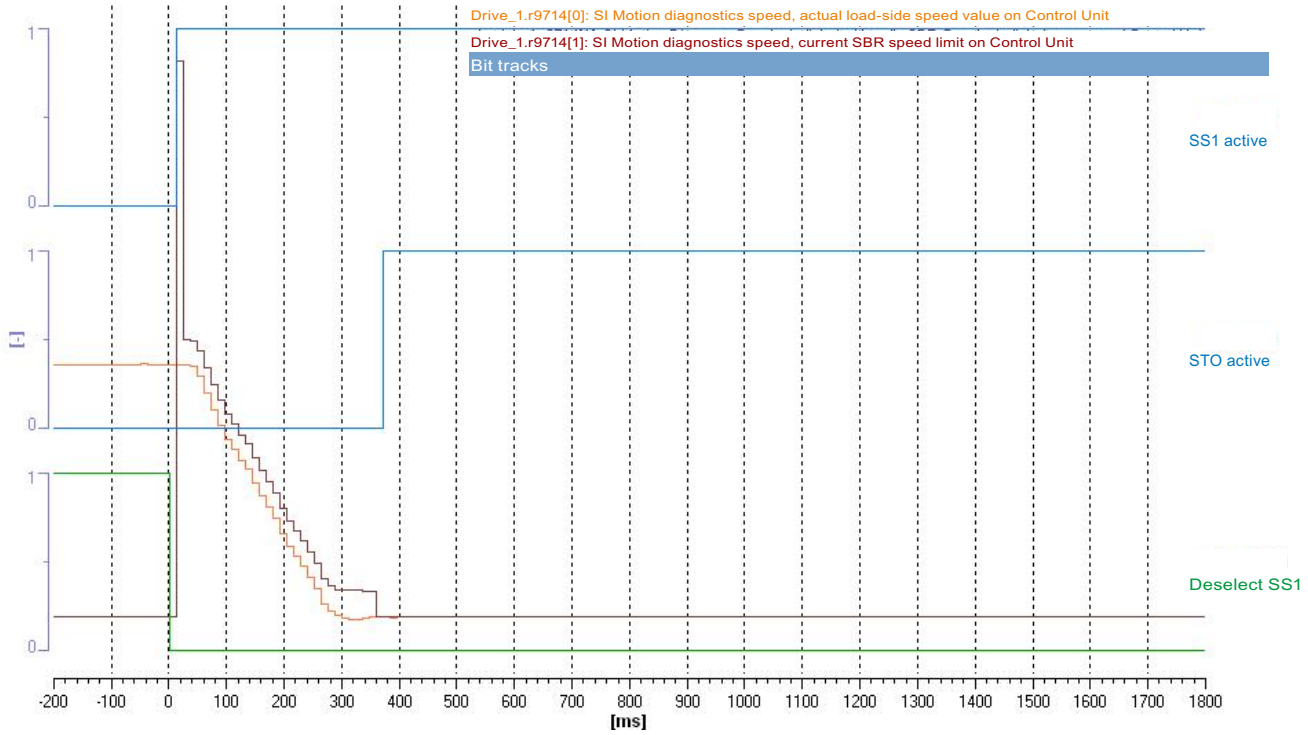

Figure 8-39 Example Trace SS1 with encoder

Trace evaluation:

- SS1 function is selected (time axis 0 ms; see bit "deselection SS1")
- Response bit "SS1 active" is set (time axis approx 20 ms)
- The drive decelerates along the configured OFF3 ramp (p1135)
- Recording of Drive_1.r9714[0] shows whether the OFF3 ramp is active
- The STO is activated (time axis approx. 370 ms; see bit "STO active"); at this point the speed falls below the shutdown speed SS1 (p9560/p9360) (drops below the shutdown speed SS1 before SS1 timer p9556/p9356 has expired)
- A fault is generated if the envelope curve of function SAM (Drive_1.r9714[1]) is exceeded by the actual speed (Drive_1.r9714[0])

Note

Small time differences (of the order of 2 to 3 Safety clock cycles (here up to 36 ms)) are caused by internal calculations and do not present a problem.

Acceptance test for Safe Brake Control with encoder (Extended Functions)

Table 8- 33 "Safe Brake Control" function

No.	Description	Status
Note: The acceptance test must be individually conducted for each configured control. The control can be realized via terminals or via PROFIsafe.		
1.	Initial state	
	• Drive in "Ready" state (p0010 = 0)	
	• Safety Integrated Extended Functions enabled (p9601.2 = 1)	
	• Safety functions enabled (p9501.0 = 1)	
	• Enable SBC function (p9602 = 1, p9802 = 1)	
	• Brake as in sequence control or brake always released (p1215 = 1 or p1215 = 2)	
	• No Safety faults and alarms (r0945[0...7], r2122[0...7], r9747[0...7]); see note "non-critical alarms" in section Acceptance test.	
	• r9772.18 = r9872.18 = 0 (STO deselected via Safe Motion Monitoring)	
	• r9772.4 = r9872.4 = 0; r9773.4 = 0 (SBC not requested)	
	• r9720.0 = 1 (STO deselected)	
	• r9722.0 = 0 (STO inactive)	
2.	Run drive (if applied, brake is released)	
	• Check whether the correct drive is operational	
	Select STO when you issue the traversing command and check the following:	
	• Brake is applied	
	• No Safety faults and alarms (r0945[0...7], r2122[0...7], r9747[0...7])	
	• r9772.4 = r9872.4 = 1; r9773.4 = 1 (SBC requested)	
	• r9772.18 = r9872.18 = 1 (STO selected via Safe Motion Monitoring)	
	• r9720.0 = 0 (STO selected)	
	• r9722.0 = 1 (STO active)	
	• r9772.4 = 1 (SLS selected)	
3.	Deselect STO and check the following:	
	• No Safety faults and alarms (r0945[0...7], r2122[0...7], r9747[0...7])	
	• r9772.4 = r9872.4 = 0; r9773.4 = 0 (SBC deselected)	
	• r9772.18 = r9872.18 = 0 (STO deselected via Safe Motion Monitoring)	
	• r9720.0 = 1 (STO deselected)	
	• r9722.0 = 0 (STO active)	
	• r0046.0 = 1 (drive in "Switching On Inhibited" status)	

No.	Description	Status
4.	Acknowledge "Switching On Inhibited" and run the drive. Check whether the correct drive is operational.	
	The following is tested: • The brake is connected properly • The hardware is functioning properly • The SBC is parameterized correctly • Forced dormant error detection for the brake control	

Acceptance test for Safe Stop 2 (Extended Functions)

Table 8- 34 "Safe Stop 2" function

No.	Description	Status
Note: The acceptance test must be individually performed for each configured control. Control may be via terminals or PROFIsafe.		
1.	Initial state	
	• Drive in "Ready" state (p0010 = 0)	
	• Safety Integrated Extended Functions enabled (p9601.2 = 1)	
	• Safety functions enabled (p9501.0 = 1)	
	• SS2 deselected (r9720.2 = 1)	
	• SS2 inactive (r9722.2 = 0)	
	• SOS inactive (r9722.3 = 0)	
	• No Safety faults and alarms (r0945[0...7], r2122[0...7], r9747[0...7]); see note "non-critical alarms" in section Acceptance test.	
2.	Run the drive	
	• Ensure that the correct drive is running	
3.	Configure and activate trace recording.	
	• Trigger: Trigger on variable - bit pattern (r9720.2 = 0)	
	• Record the following values: r9714[0], r9714[1], r9720, r9722	
	• Select the time interval and pretrigger so you can recognize the selection of SS2 and the transition into the subsequent SOS state	
	For better analysis, display the following bit values:	
	• r9720.2 (deselection SS2)	
	• r9722.2 (SS2 active)	
	• r9722.3 (SOS active)	
	Select SS2 while the drive is moving	
	• The drive decelerates along the OFF3 ramp	
	• Subsequent SOS state is activated	
	• No Safety faults and alarms (r0945[0...7], r2122[0...7], r9747[0...7])	

No.	Description	Status
4.	Analyze trace:	
	• SOS is triggered after the SS2 timer (p9352/9552) has expired.	
5.	Save/print the trace and add it to the acceptance report (refer to the example below)	
6.	Deselect SS2	
	• Ensure that the drive is running with the setpoint again	
	• No Safety faults and alarms (r0945[0...7], r2122[0...7], r9747[0...7])	

Example Trace SS2

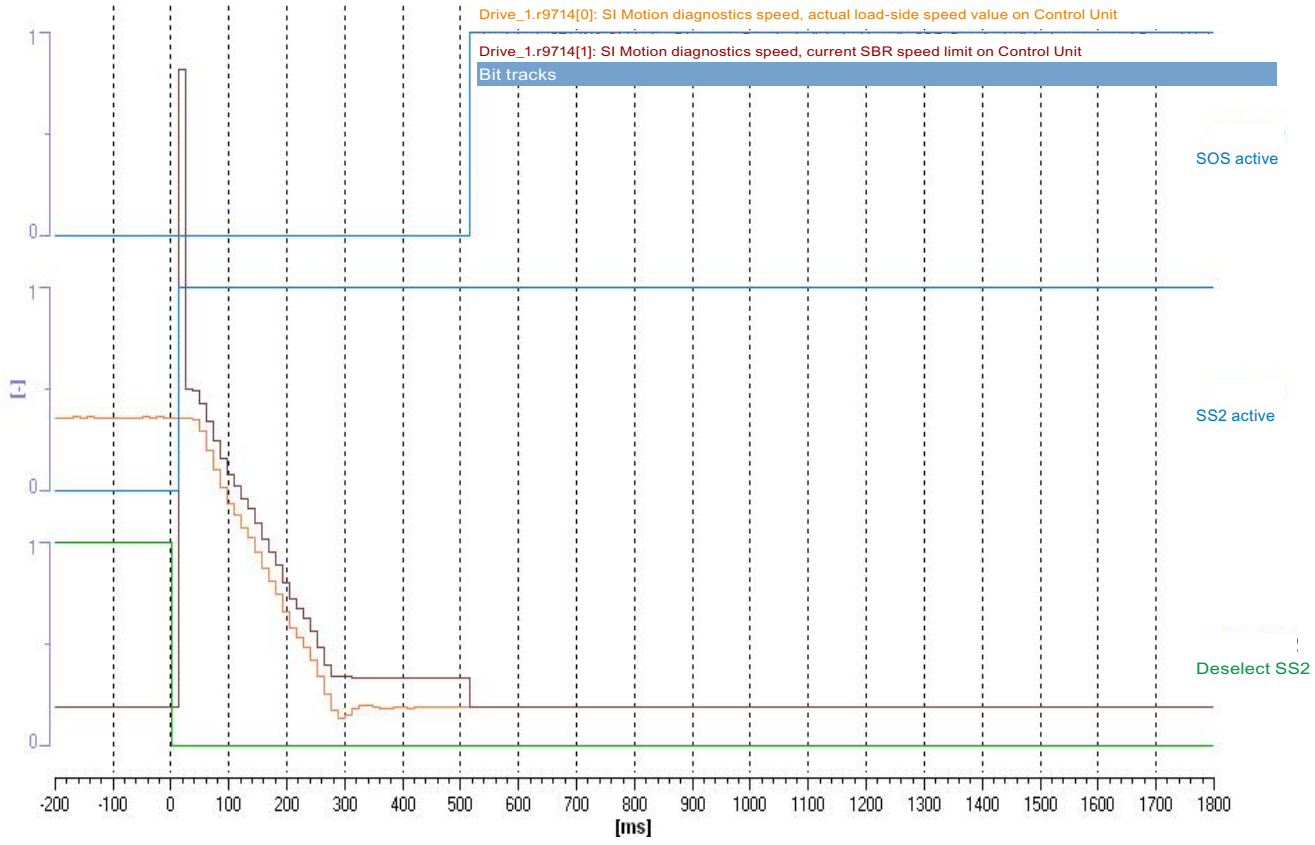

Figure 8-40 Example Trace SS2

Trace evaluation:

- SS2 function is selected (time axis 0 ms; see bit "deselection SS2")
- Response bit "SS2 active" is set (time axis approx 20 ms)
- The drive decelerates along the configured OFF3 ramp (p1135)
- Recording r9714[0] indicates whether the OFF3 ramp is active
- SOS is activated (time axis approx. 500 ms; see bit "SOS active"); at this point the SS2 timer (p9552/p9352) has expired
- A fault is generated if the envelope curve of function SAM/SBR (Drive_1.r9714[1]) is exceeded by the actual speed (r9714[0])

Note

Small time differences (of the order of 2 to 3 Safety clock cycles (here up to 36 ms)) are caused by internal calculations and do not present a problem.

Acceptance test for Safe Operating Stop (SOS)

Table 8- 35 "Safe Operating Stop" function

No.	Description	Status
Note: The acceptance test must be individually conducted for each configured control. The control can be realized via terminals or via PROFIsafe.		
1.	Initial state	
	• Drive in "Ready" state (p0010 = 0)	
	• Safety Integrated Extended Functions enabled (p9601.2 = 1)	
	• Safety functions enabled (p9501.0 = 1)	
	• SOS inactive (r9722.3 = 0)	
	• No Safety faults and alarms (r0945[0...7], r2122[0...7], r9747[0...7]); see note "non-critical alarms" in section Acceptance test.	
2.	• It may be necessary to take measures in the higher-level control to be able to run the drive with activated SOS. • Please ensure that the internal limits r9733.0 and r9733.1 are canceled by the selection "Start acceptance test".	
3.	Configure and activate trace recording.	
	• Trigger: Trigger on variable - bit pattern (r9722.7 = 0)	
	• Record the following values: r9713[0], r9720, r9721, r9722	
	• Select the time interval and pretrigger so you can recognize start-up of the drive and infringement of the SOS tolerance window (p9330/p9530)	
	For better analysis, display the following bit values:	
	• r9720.3 (deselect SOS)	
	• r9721.12 (STOP A or B active)	
	• r9722.0 (STO active; set for STOP A)	
	• r9722.1 (SS1 active; set for STOP B)	
	• r9722.3 (SOS active)	
	• r9722.7 (internal event; set on the occurrence of the first Safety message)	
	Select SOS	
	Run the drive beyond the standstill limit set in p9330/p9530	
	• Check that the drive moves briefly and then decelerates back to a standstill	
	Check whether the following Safety messages are pending:	
	• C01707, C30707 (Tolerance for safe operating stop exceeded)	
	• C01701, C30701 (STOP B initiated)	
	• C01700, C30700 (STOP A initiated)	

No.	Description	Status
4.	Analyze trace:	
	• As soon as r9713[0] (unit µm or m°) leaves the tolerance window, a Safety message (r9722.7 = 0) becomes active	
	• As a consequence, the drive is brought to a standstill with STOP B and STOP A	
5.	Save/print the trace and add it to the acceptance report (refer to the example below)	
6.	Deselect SOS and acknowledge Safety messages	
	• No Safety faults and alarms (r0945[0...7], r2122[0...7], r9747[0...7])	
	• r0046.0 = 1 (drive in "Switching On Inhibited" status)	
	Acknowledge "Switching On Inhibited" and run the drive	
	• Check the drive is moving	

Example trace

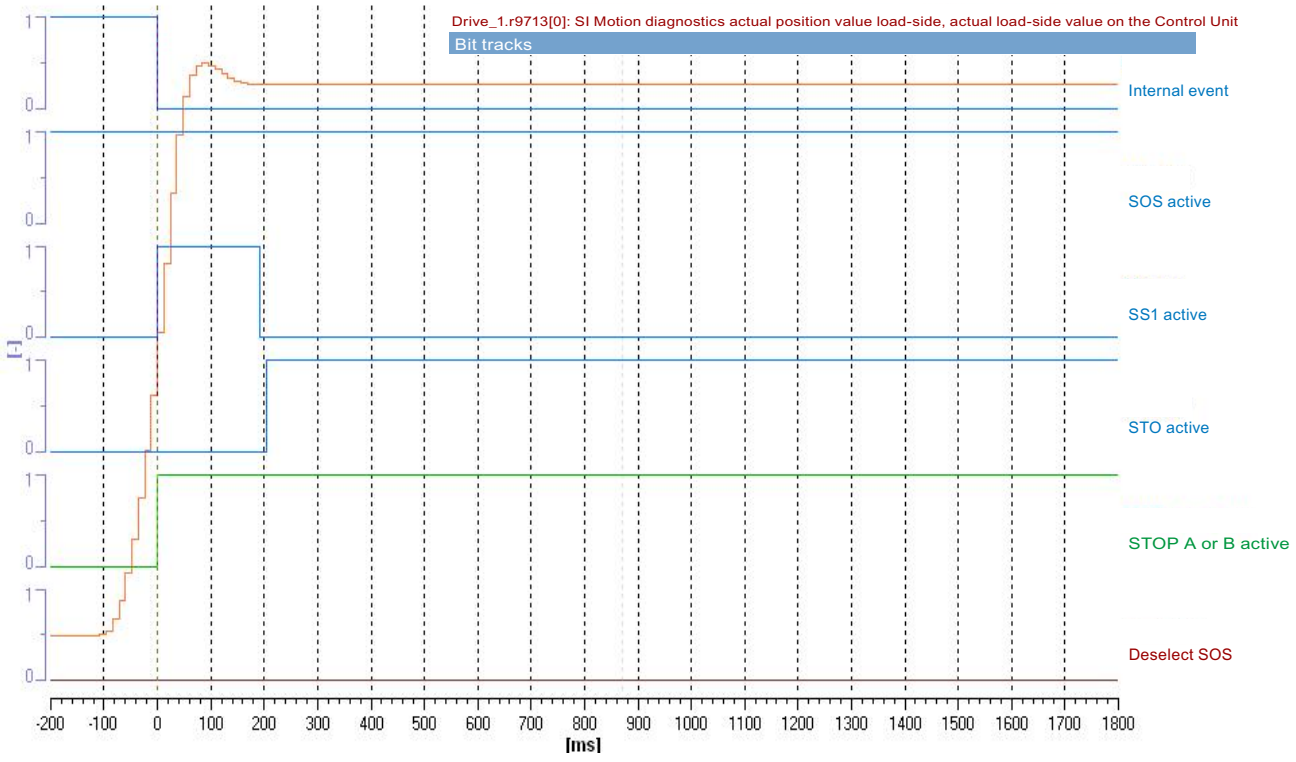

Figure 8-41 Example trace SOS

Trace evaluation:

- SOS function is activated (see bits "deselect SOS" and "SOS active")
- The drive starts moving (time axis approx -100 ms)
- Exiting the SOS tolerance window is recognized (time axis approx 0 ms)
- Safety fault is initiated (time axis approx. 0 ms; bit "internal event" is set to 0)
- Fault response STOP B is initiated (see bit "STOP A or B active" and "SS1 active")
- The drive is decelerated to a standstill
- Standstill reached (time axis approx. 200 ms)
- STOP A (as follow-up response to STOP B) is activated (see bit "STO active"); at this point the speed falls below the shutdown speed SS1 (p9560/p9360) before the SS1 timer (p9556/p9356) has expired (drops below the shutdown speed SS1 before SS1 timer (p9556/p9356) has expired)

Note

Small time differences (of the order of 2 to 3 Safety clock cycles (here up to 36 ms)) are caused by internal calculations and do not present a problem.

Acceptance test for Safely-Limited Speed with encoder (Extended Functions)

SLS with stop response "STOP A"

Table 8- 36 Function "Safely Limited Speed with encoder" with STOP A

No.	Description	Status
Note: The acceptance test must be carried out separately for each configured control and each SLS speed limit used. Control may be via terminals or PROFIsafe.		
1.	Initial state	
	• Drive in "Ready" state (p0010 = 0)	
	• Safety Integrated Extended Functions enabled (p9601.2 = 1)	
	• Safety functions enabled (p9501.0 = 1)	
	• SLS inactive (r9722.4 = 0)	
	• No Safety faults and alarms (r0945[0...7], r2122[0...7], r9747[0...7]); see note "non-critical alarms" in section Acceptance test.	
2.	• It may be necessary to take measures in the higher-level control to be able to exceed the active speed limit. • Please ensure that the internal limits r9733.0 and r9733.1 are canceled by the selection "Start acceptance test".	
3.	Configure and activate trace recording	
	• Trigger: Trigger on variable - bit pattern (r9722.7 = 0)	
	• Record the following values: r9714[0], r9720, r9721, r9722	
	• Select the time interval and pretrigger so you can recognize when the active SLS limit has been exceeded and the subsequent drive responses	
	For better analysis, display the following bit values:	
	• r9722.4 (SLS active) and r9722.9/.10 (active SLS level)	
	• r9722.7 (internal event; set on the occurrence of the first Safety message)	
	• r9722.0 (STO active; set for STOP A)	
	• r9721.12 (STOP A or B active)	
	• r9720.4 (deselection SLS) and r9720.9/.10 (selection SLS level)	
	Select SLS with level x	
	Switch on the drive and specify the setpoint above the SLS limit	
	• Check that the drive is moving, and after the SLS limit (p9331[x]/9531[x]) has been exceeded that it is coasting or a configured holding brake is applied	
	Check whether the following Safety messages are pending:	
	• C01714 (x00), C30714 (x00); x = 1...4 depending on the SLS level (safely limited speed exceeded)	
	• C01700, C30700 (STOP A initiated)	

No.	Description	Status
4.	Analyze trace:	
	• If r9714[0] exceeds the active SLS limit, a Safety message (r9722.7 = 0) becomes active	
	• STOP A is initiated as a consequence	
5.	Save/print the trace and add it to the acceptance report (refer to the example below)	
6.	Deselect SLS and acknowledge Safety messages	
	• No Safety faults and alarms (r0945[0...7], r2122[0...7], r9747[0...7])	
	• r0046.0 = 1 (drive in "Switching On Inhibited" status)	
	Acknowledge "Switching On Inhibited" and run the drive	
	Check the drive is moving	

Example trace SLS with STOP A

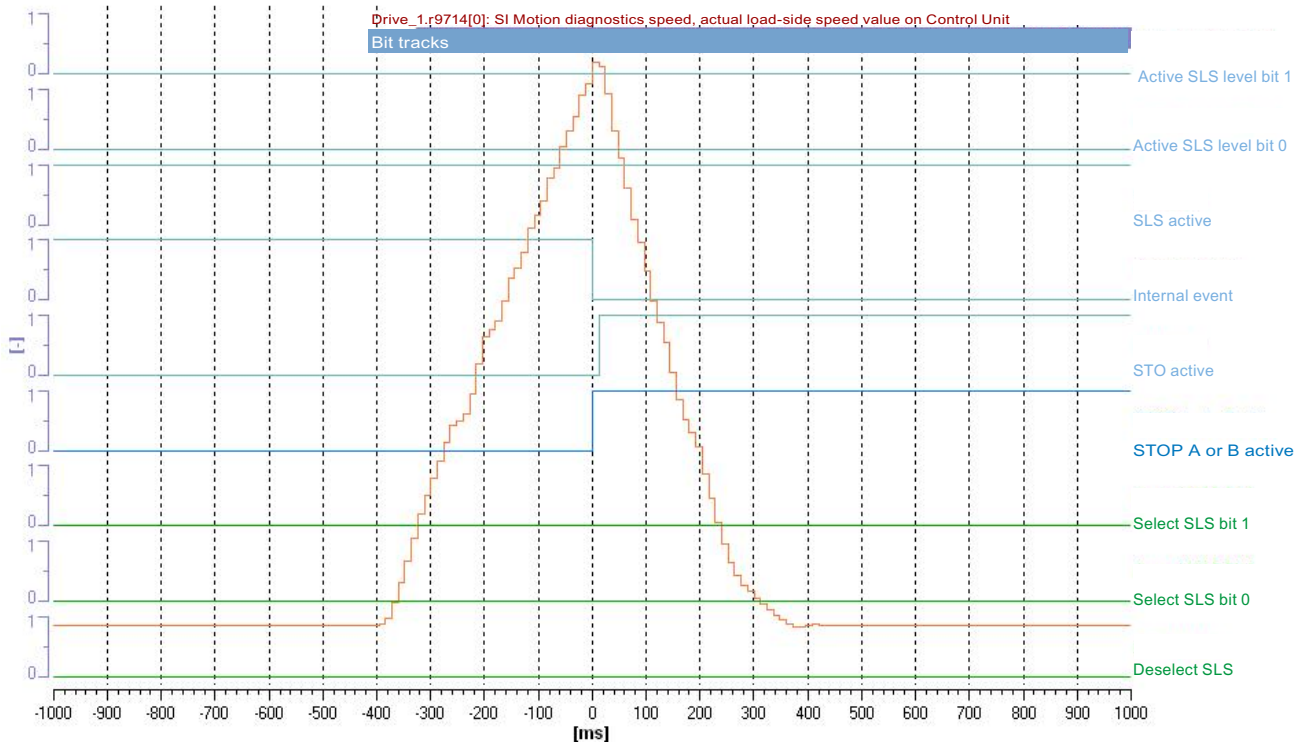

Figure 8-42 Example trace: SLS with STOP A

Trace evaluation:

- SLS function with SLS level 1 is active (see bits "deselection SLS", "selection SLS bit 0", "selection SLS bit 1" and "SLS active", "active SLS level bit 0" and "active SLS level bit 1")
- Drive is accelerated beyond the SLS limit (time axis from approx. -400 ms)
- Exceeding of the limit is recognized (time axis 0 ms)
- Safety fault is initiated (time axis 0 ms; bit "internal event" is set to 0)
- Fault response STOP A is initiated (time axis 0 ms; see bit "STOP A or B active" and "STO active")
- Drive coasts down (see Drive_1.r9714[0])

Note

Small time differences (of the order of 2 to 3 Safety clock cycles (here up to 36 ms)) are caused by internal calculations and do not present a problem.

SLS with stop response "STOP B"

Table 8- 37 Function "Safely Limited Speed with encoder" with STOP B

No.	Description	Status
Note: The acceptance test must be carried out separately for each configured control and each SLS speed limit used. Control may be via terminals or PROFIsafe.		
1.	Initial state	
	• Drive in "Ready" state (p0010 = 0)	
	• Safety Integrated Extended Functions enabled (p9601.2 = 1)	
	• Safety functions enabled (p9501.0 = 1)	
	• No Safety faults and alarms (r0945[0...7], r2122[0...7], r9747[0...7]); see note "non-critical alarms" in section Acceptance test (Page 474).	
2.	It may be necessary to take measures in the higher-level control to be able to exceed the active speed limit.	
3.	Configure and activate trace recording.	
	• Trigger: Trigger on variable - bit pattern (r9722.7 = 0)	
	• Record the following values: r9714[0], r9714[1], r9720, r9721, r9722	
	• Select the time interval and pretrigger so you can recognize when the active SLS limit has been exceeded and the subsequent drive responses	
	For better analysis, display the following bit values:	
	• r9722.4 (SLS active) and r9722.9/.10 (active SLS level)	
	• r9722.7 (internal event; set on the occurrence of the first Safety message)	
	• r9722.0 (STO active; set for STOP A)	
	• r9722.1 (SS1 active; set for STOP B)	
	• r9721.12 (STOP A or B active)	
	• r9720.4 (deselection SLS) and r9720.9/.10 (selection SLS level)	
	Select SLS with level x	
	Switch on the drive and specify the setpoint above the SLS limit	
	• Check that the drive is moving, and after the SLS limit (p9331[x]/9531[x]) has been exceeded that it is decelerated along the OFF3 ramp before STOP A becomes active	
	Check whether the following Safety messages are pending:	
	• C01714 (x00), C30714 (x00); x = 1...4 depending on the SLS level (safely limited speed exceeded)	
	• C01701, C30701 (STOP B initiated)	
	• C01700, C30700 (STOP A initiated)	

No.	Description	Status
4.	Analyze trace:	
	• If r9714[0] exceeds the active SLS limit, a Safety message (r9722.7 = 0) becomes active	
	• A STOP B is initiated as a consequence (with subsequent stop STOP A)	
5.	Save/print the trace and add it to the acceptance report (refer to the example below)	
6.	Deselect SLS and acknowledge Safety messages	
	• No Safety faults and alarms (r0945[0...7], r2122[0...7], r9747[0...7])	
	• r0046.0 = 1 (drive in "Switching On Inhibited" status)	
	Acknowledge "Switching On Inhibited" and run the drive	
	• Check the drive is moving.	

Example trace SLS with STOP B

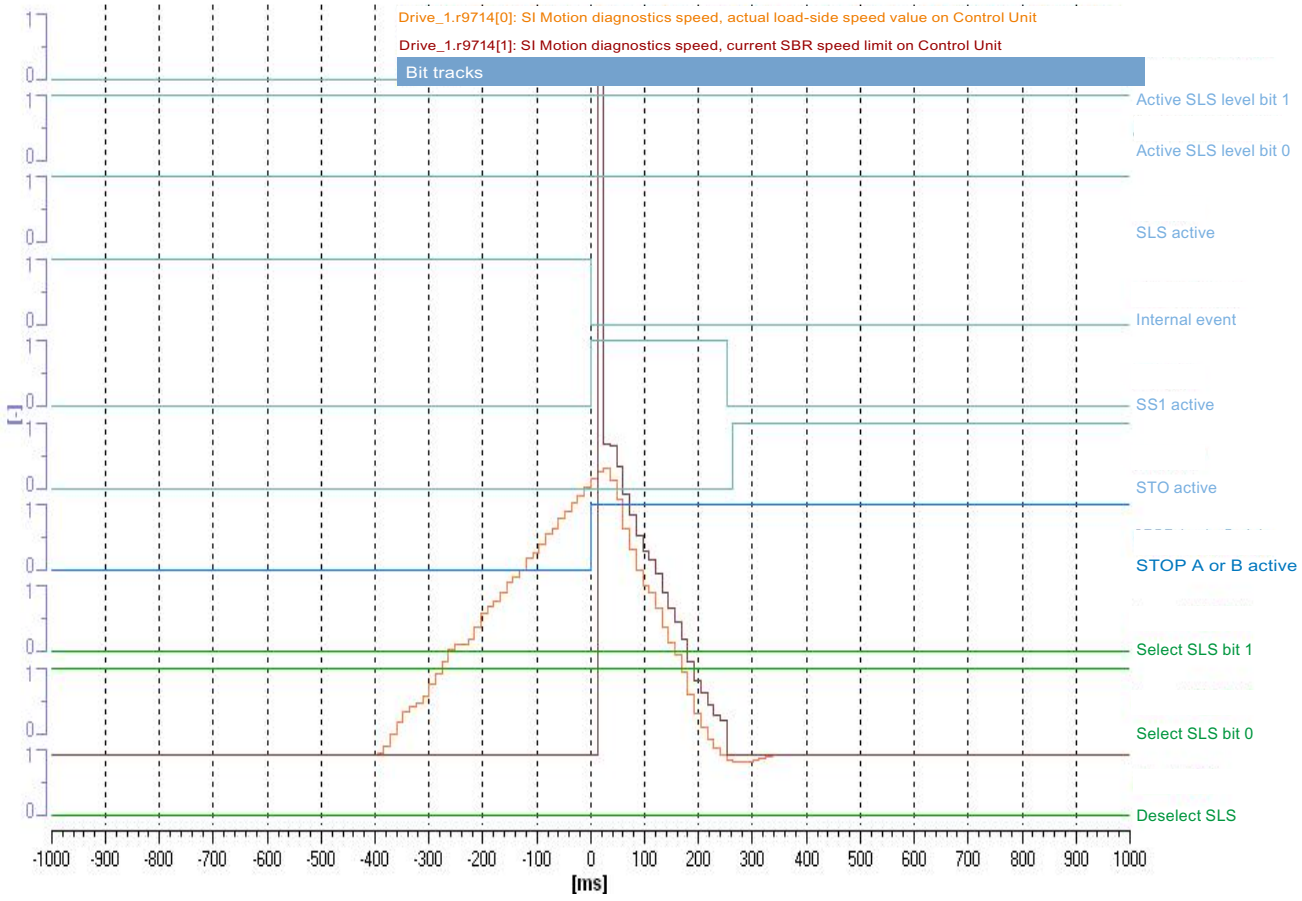

Figure 8-43 Example trace: SLS with STOP B

Trace evaluation:

- SLS function with SLS level 2 is active (see bits "deselection SLS", "selection SLS bit 0", "selection SLS bit 1" and "SLS active", "active SLS level bit 0" and "active SLS level bit 1")
- Drive is accelerated beyond the SLS limit (time axis from approx. -400 ms)
- Exceeding of the limit is recognized (time axis 0 ms)
- Safety fault is initiated (time axis 0 ms; bit "internal event" is set to 0)
- Fault response STOP B is initiated (time axis 0 ms; see bit "STOP A or B active" and "SS1 active")
- Drive is decelerated to a standstill (see curve of Drive_1.r9714[0])
- Standstill reached (time axis from approx. 250 ms)
- STOP A (as follow-up response to STOP B) is activated (see bit "STO active"); at this point the speed falls below the shutdown speed SS1 (p9560/p9360) (drops below the shutdown speed SS1 before SS1 timer p9556/p9356 has expired)

Note

Small time differences (of the order of 2 to 3 Safety clock cycles (here up to 36 ms)) are caused by internal calculations and do not present a problem.

SLS with stop response "STOP C"

Table 8- 38 Function "Safely Limited Speed with encoder" with STOP C

No.	Description	Status
Note: The acceptance test must be carried out separately for each configured control and each SLS speed limit used. Control may be via terminals or PROFIsafe.		
1.	Initial state	
	• Drive in "Ready" state (p0010 = 0)	
	• Safety Integrated Extended Functions enabled (p9601.2 = 1)	
	• Safety functions enabled (p9501.0 = 1)	
	• No Safety faults and alarms (r0945[0...7], r2122[0...7], r9747[0...7]); see note "non-critical alarms" in section Acceptance test.	
2.	It may be necessary to take measures in the higher-level control to be able to exceed the active speed limit	
3.	Configure and activate trace recording.	
	• Trigger: Trigger on variable - bit pattern (r9722.7 = 0)	
	• Record the following values: r9714[0], r9714[1], r9720, r9721, r9722	
	• Select the time interval and pretrigger so you can recognize when the active SLS limit has been exceeded and the subsequent drive responses	
	For better analysis, display the following bit values:	
	• r9720.4 (deselection SLS) and r9720.9/.10 (selection SLS level)	
	• r9721.13 (STOP C active)	
	• r9722.2 (SS2 active; set for STOP C)	
	• r9722.3 (SOS active)	
	• r9722.4 (SLS active) and r9722.9/.10 (active SLS level)	
	• r9722.7 (internal event; set on the occurrence of the first Safety message)	
	Select SLS with level x	
	Switch on the drive and specify the setpoint above the SLS limit	
	• Check that the drive is moving, and after the SLS limit (p9331[x]/9531[x]) has been exceeded that it is decelerated to a standstill along the OFF3 ramp	
	Check whether the following Safety messages are pending:	
	• C01714 (x00), C30714 (x00); x = 1...4 depending on the SLS level (safely limited speed exceeded)	
	• C01708, C30708 (STOP C initiated)	
4.	Analyze trace:	
	• If r9714[0] exceeds the active SLS limit, a Safety message (r9722.7 = 0) becomes active	
	• STOP C is initiated as a consequence	

No.	Description	Status
5.	Save/print the trace and add it to the acceptance report (refer to the example below)	
6.	Deselect SLS and acknowledge Safety messages	
	• Ensure that the drive is running with the setpoint again	
	• No Safety faults and alarms (r0945[0...7], r2122[0...7], r9747[0...7])	

Example trace SLS with STOP C

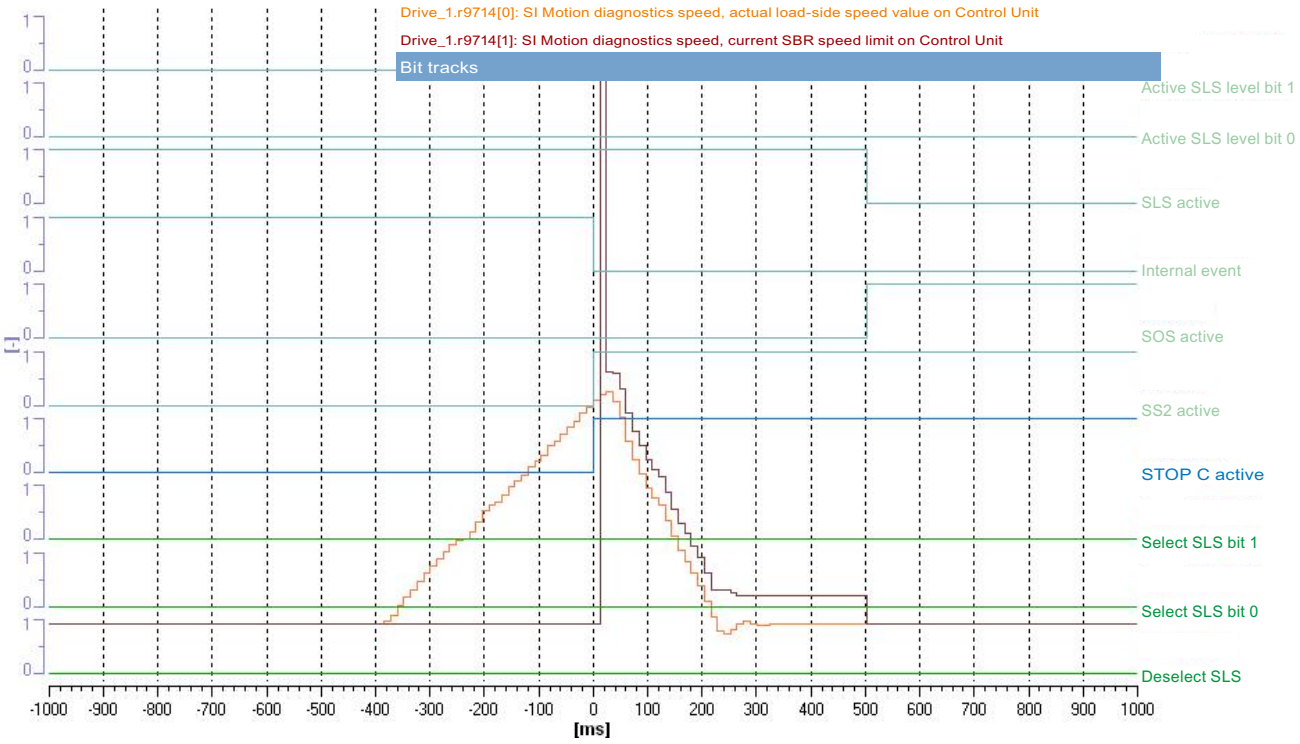

Figure 8-44 Example trace: SLS with STOP C

Trace evaluation:

- SLS function with SLS level 1 is active (see bits "deselection SLS", "selection SLS bit 0", "selection SLS bit 1" and "SLS active", "active SLS level bit 0" and "active SLS level bit 1")
- Drive is accelerated beyond the SLS limit (time axis from approx. -400 ms)
- Exceeding of the limit is recognized (time axis 0 ms)
- Safety fault is initiated (time axis 0 ms; bit "internal event" is set to 0)
- Fault response STOP C is initiated (see bit "STOP C active" and "SS2 active")
- Drive is decelerated to a standstill (see curve of Drive_1.r9714[0])
- After the SS2 timer has expired the follow-up function SOS is activated (time axis 500 ms)
- The "SOS active" bit is set and "SLS active" is reset

Note

Small time differences (of the order of 2 to 3 Safety clock cycles (here up to 36 ms)) are caused by internal calculations and do not present a problem.

SLS with stop response "STOP D"

Table 8- 39 Function "Safely Limited Speed with encoder" with STOP D

No.	Description	Status
Note: The acceptance test must be carried out separately for each configured control and each SLS speed limit used. Control may be via terminals or PROFIsafe.		
1.	Initial state	
	• Drive in "Ready" state (p0010 = 0)	
	• Safety Integrated Extended Functions enabled (p9601.2 = 1)	
	• Safety functions enabled (p9501.0 = 1)	
	• No Safety faults and alarms (r0945[0...7], r2122[0...7], r9747[0...7]); see note "Non-critical alarms" in section Acceptance test.	
2.	It may be necessary to take measures in the higher-level control to be able to exceed the active speed limit	
3.	Configure and activate trace recording	
	• Trigger: Trigger on variable - bit pattern (r9722.7 = 0)	
	• Record the following values: r9714[0], r9720, r9721, r9722	
	• Select the time interval and pretrigger so that the exceeding of the active SLS limit and the subsequent drive responses can be recognized	
	For better analysis, display the following bit values:	
	• r9720.4 (deselection SLS) and r9720.9/.10 (selection SLS level)	
	• r9721.14 (STOP D active)	
	• r9722.3 (SOS active; set for STOP D)	
	• r9722.4 (SLS active) and r9722.9/.10 (active SLS level)	
	• r9722.7 (internal event; set on the occurrence of the first Safety message)	
	Select SLS with level x	
	Switch on the drive and specify the setpoint above the SLS limit	
	• Check that the drive is moving, and after the SLS limit (p9331[x]/9531[x]) and the SOS standstill tolerance window have been exceeded, that it is decelerated along the OFF3 ramp before STOP A becomes active as a consequence	
	Check whether the following Safety messages are pending:	
	• C01714 (x00), C30714 (x00); x = 1...4 depending on the SLS level (safely limited speed exceeded)	
	• C01709, C30709 (STOP D initiated)	
	• C01707, C30707 (Tolerance for safe operating stop exceeded)	
	• C01701, C30701 (STOP B initiated)	
	• C01700, C30700 (STOP A initiated)	

No.	Description	Status
4.	Analyze trace:	
	• If r9714[0] exceeds the active SLS limit, a Safety message (r9722.7 = 0) becomes active	
	• STOP D is initiated as a consequence.	
	• As a consequence of STOP D (selection SOS) the above-described responses will be triggered if the drive is not stopped by the higher-level control on activation of STOP D	
5.	Save/print the trace and add it to the acceptance report (refer to the example below)	
6.	Deselect SLS and acknowledge Safety messages	
	• No Safety faults and alarms (r0945[0...7], r2122[0...7], r9747[0...7])	
	• r0046.0 = 1 (drive in "Switching On Inhibited" status)	
	Acknowledge "Switching On Inhibited" and run the drive	
	• Check the drive is moving	

Example trace SLS with STOP D

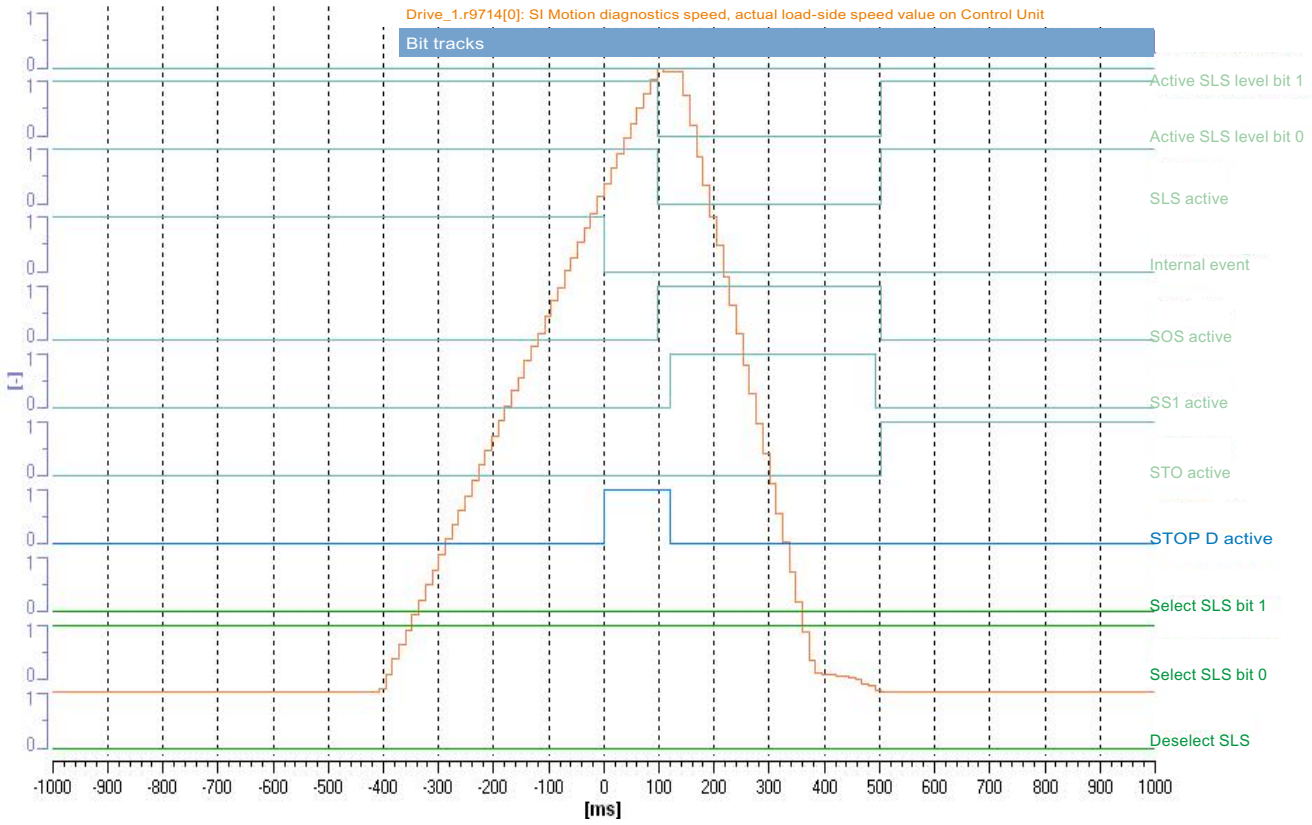

Figure 8-45 Example trace: SLS with STOP D

Trace evaluation:

- SLS function with SLS level 2 is active (see bits "deselection SLS", "selection SLS bit 0", "selection SLS bit 1" and "SLS active", "active SLS level bit 0" and "active SLS level bit 1")
- Drive is accelerated beyond the SLS limit (time axis from approx. -400 ms)
- Exceeding of the limit is recognized (time axis 0 ms)
- Safety fault is initiated (time axis 0 ms; bit "internal event" is set to 0)
- Fault response STOP D (corresponds to selection SOS) is initiated (see bit "STOP D active")
- Only after the delay time between selection and activation SOS (p9551/p9351) has expired is the standstill position safely monitored (time axis 100 ms; see bit "SOS active")
- But as the axis continues to turn, the standstill tolerance window is violated (time axis approx. 120 ms)
- STOP B is initiated (see bit "SS1 active")
- The drive is decelerated to a standstill
- Standstill is reached (time axis approx. 500 ms)
- STOP A (as follow-up response to STOP B) is activated (see bit "STO active"); at this point the speed falls below the shutdown speed SS1 (p9560/p9360) (drops below the shutdown speed SS1 before SS1 timer p9556/p9356 has expired).

Note

Small time differences (of the order of 2 to 3 Safety clock cycles (here up to 36 ms)) are caused by internal calculations and do not present a problem.

SLS with stop response "STOP E"

Table 8- 40 Function "Safely-Limited Speed with encoder" with STOP E

No.	Description	Status
Note: The acceptance test must be carried out separately for each configured control and each SLS speed limit used. Control may be via TM54F or PROFIsafe.		
1.	Initial state	
	• Drive in "Ready" state (p0010 = 0)	
	• Safety Integrated Extended Functions enabled (p9601.2 = 1)	
	• Safety functions enabled (p9501.0 = 1)	
	• No Safety faults and alarms (r0945[0...7], r2122[0...7], r9747[0...7]); see note "Non-critical alarms" in section .	
2.	It may be necessary to take measures in the higher-level control to be able to exceed the active speed limit	
3.	Configure and activate trace recording	
	• Trigger: Trigger on variable - bit pattern (r9722.7 = 0)	
	• Record the following values: r9714[0], r9720, r9721, r9722	
	• Select the time interval and pretrigger so that the exceeding of the active SLS limit and the subsequent drive responses can be recognized	
	For better analysis, display the following bit values:	
	• r9720.4 (deselection SLS) and r9720.9/.10 (selection SLS level)	
	• r9721.15 (STOP E active)	
	• r9722.3 (SOS active; set for STOP E)	
	• r9722.4 (SLS active) and r9722.9/.10 (active SLS level)	
	• r9722.7 (internal event; set on the occurrence of the first Safety message)	
	Select SLS with level x	
	Switch on the drive and specify the setpoint above the SLS limit	
	• Check that the drive is moving, and after the SLS limit (p9331[x]/9531[x]) and the SOS standstill tolerance window have been exceeded, that it is decelerated along the OFF3 ramp before STOP A becomes active as a consequence	
	Check whether the following Safety messages are pending:	
	• C01714 (x00), C30714 (x00); x = 1...4 depending on the SLS level (safely limited speed exceeded)	
	• C01710, C30710 (STOP E initiated)	
	• C01707, C30707 (Tolerance for safe operating stop exceeded)	
	• C01701, C30701 (STOP B initiated)	
	• C01700, C30700 (STOP A initiated)	

No.	Description	Status
4.	Analyze trace:	
	• If r9714[0] (unit [µm/Safety clock cycle] or [m°/Safety clock cycle]) exceeds the active SLS limit, a Safety message (r9722.7 = 0) becomes active	
	• STOP E is initiated as a consequence.	
	• As a consequence of STOP E (selection SOS) the above-described responses will be triggered if the drive is not stopped by the higher-level control on activation of STOP E	
5.	Save/print the trace and add it to the acceptance report (refer to the example below)	
6.	Deselect SLS and acknowledge Safety messages	
	• No Safety faults and alarms (r0945[0...7], r2122[0...7], r9747[0...7])	
	• r0046.0 = 1 (drive in "Switching On Inhibited" status)	
	Acknowledge "Switching On Inhibited" and run the drive	
	• Check the drive is moving	

Example trace SLS with STOP E

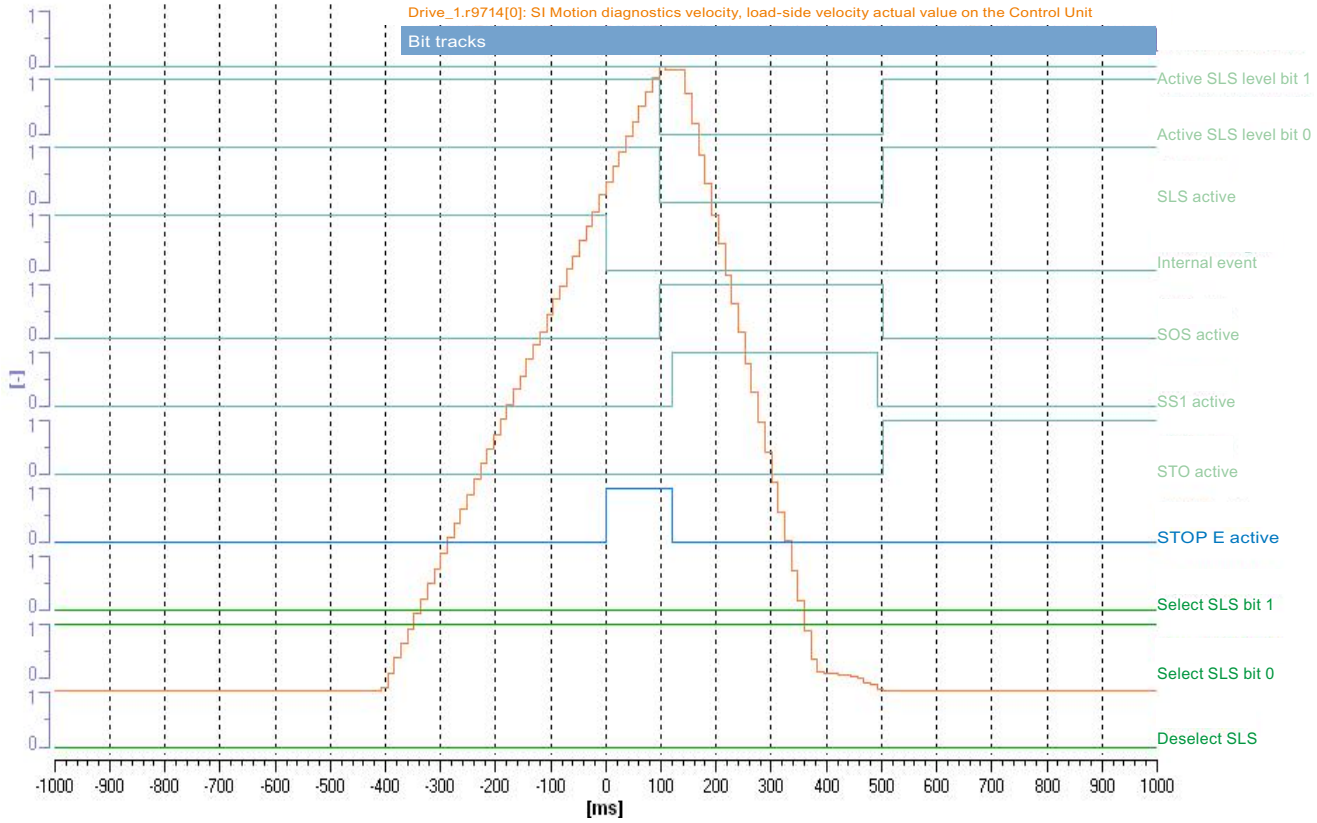

Figure 8-46 Example trace: SLS with STOP E

Trace evaluation:

- SLS function with SLS level 2 is active (see bits "deselection SLS", "selection SLS bit 0", "selection SLS bit 1" and "SLS active", "active SLS level bit 0" and "active SLS level bit 1")
- Drive is accelerated beyond the SLS limit (time axis from approx. -400 ms)
- Exceeding of the limit is recognized (time axis 0 ms)
- Safety fault is initiated (time axis 0 ms; bit "internal event" is set to 0)
- Fault response STOP E (corresponds to selection SOS) is initiated (see bit "STOP E active")
- Only after the delay time between selection and activation SOS (p9551/p9351) has expired is the standstill position safely monitored (time axis 100 ms; see bit "SOS active")
- But as the axis continues to turn, the standstill tolerance window is violated (time axis approx. 120 ms)
- STOP B is initiated (see bit "SS1 active")
- The drive is decelerated to a standstill
- Standstill is reached (time axis approx. 500 ms)
- STOP A (as follow-up response to STOP B) is activated (see bit "STO active"); at this point the speed falls below the shutdown speed SS1 (p9560/p9360) (drops below the shutdown speed SS1 before SS1 timer p9556/p9356 has expired).

Note

Small time differences (of the order of 2 to 3 Safety clock cycles (here up to 36 ms)) are caused by internal calculations and do not present a problem.

Acceptance test for Safe Speed Monitor (Extended Functions)

Table 8- 41 "Safe Speed Monitor" function

No.	Description	Status
1.	Initial state	
	• Drive in "Ready" state (p0010 = 0)	
	• Safety Integrated Extended Functions enabled (p9601.2 = 1)	
	• Safety functions enabled (p9501.0 = 1)	
	• No Safety message (r0945, r2122, r9747); see note "Non-critical alarms" in section Acceptance tests.	
2.	Switch off the drive or specify speed setpoint = 0	
	Configure and activate trace recording	
	• Trigger: Trigger on variable - bit pattern (r9722.15 = 1)	
	• Record the following values: r9714[0], r9722	
	• Select the time interval and pretrigger so you can recognize when the level exceeds the SSM limit (p9346/p9546) and subsequently falls below it again	
	Switch on the drive and specify the setpoint so that the level briefly exceeds the SSM limit and then drops below it once more	
	• Check the drive is turning	
3.	Analyze trace:	
	• If r9714[0] violates the SSM limit p9346/p9546, r9722.15 = 0 is valid	
	• After the limit has been violated, r9722.15 = 1 is valid	
	• If hysteresis is active, then r9722.15 returns to 1 only when r9714[0] no longer violates the limit p9346/p9546 offset with the hysteresis value p9347/p9547	
	For better analysis, display the following bit values:	
	• r9722.15 (SSM speed under the limit value)	
4.	Save/print the trace and add it to the acceptance report (refer to the example below)	

Example Trace SSM (with hysteresis)

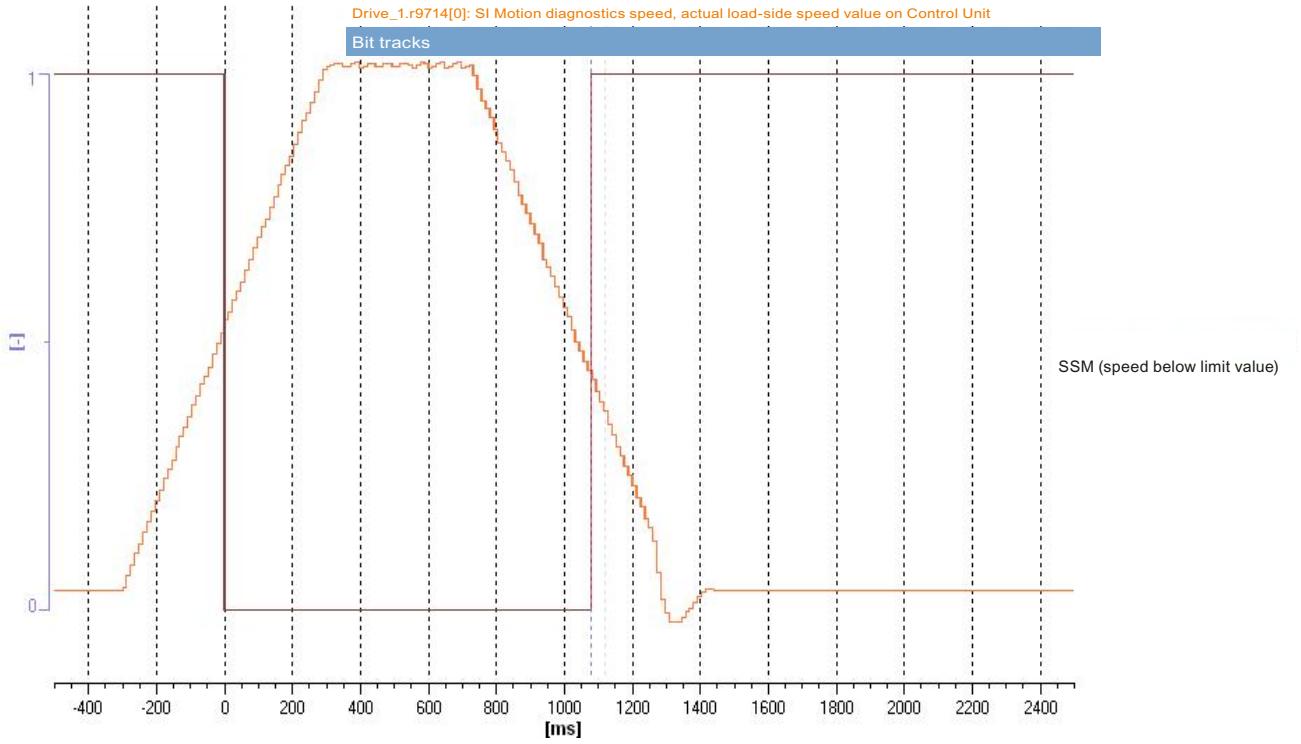

Figure 8-47 Example Trace SSM (with hysteresis)

Trace evaluation:

- Drive is accelerated (time axis from approx. -300 ms)
- SSM limit value (p9546/p9346) is exceeded (time axis 0 ms)
- Bit "SSM (speed below limit value)" is set to 0 (time axis 0 ms)
- Drive is decelerated again (time axis approx. 750 ms)
- Hysteresis active: The above named bit is only set to 1 once more if the speed falls below the SSM limit value minus the hysteresis value (p9547/p9347) (time axis approx. 1080 ms)

Note

Small time differences (of the order of 2 to 3 Safety clock cycles (here up to 36 ms)) are caused by internal calculations and do not present a problem.

8.9.5.3 Acceptance tests for Extended Functions (without encoder)

Acceptance test Safe Torque Off without encoder (Extended Functions)

Table 8- 42 Function "Safe Torque Off without encoder"

No.	Description	Status
Notes: The acceptance test must be individually conducted for each configured control. The control can be realized via terminals or via PROFIsafe.		
1.	Initial state	
	• Drive in "Ready" state (p0010 = 0)	
	• Safety Integrated Extended Functions enabled (p9601.2 = 1)	
	• Safety functions enabled (p9501.0 = 1)	
	• Safety configured without encoder (p9506 = 1 or p9506 = 3)	
	• No Safety faults and alarms (r0945[0...7], r2122[0...7], r9747[0...7]); see note "non-critical alarms" in section Acceptance test.	
	• r9772.18 = r9872.18 = 0 (STO deselected via Safe Motion Monitoring)	
	• r9772.0 = r9772.1 = 0 (STO deselected and inactive – P1)	
	• r9872.0 = r9872.1 = 0 (STO deselected and inactive – P2)	
	• r9773.0 = r9773.1 = 0 (STO deselected and inactive – P1 + P2)	
	• r9720.0 = 1 (STO deselected)	
	• r9722.0 = 0 (STO inactive)	
2.	Run the drive	
	• Check whether the correct drive is operational	
	Select STO when you issue the traversing command and check the following:	
	• The drive coasts to a standstill or is braked and stopped by the mechanical brake (if available and configured (p1215, p9602, p9802)).	
	• No Safety faults and alarms (r0945[0...7], r2122[0...7], r9747[0...7])	
	• r9772.18 = r9872.18 = 1 (STO selected via Safe Motion Monitoring)	
	• r9772.0 = r9772.1 = 1 (STO selected and active – P1)	
	• r9872.0 = r9872.1 = 1 (STO selected and active – P2)	
	• r9773.0 = r9773.1 = 1 (STO selected and active – P1 + P2)	
	• r9720.0 = 0 (STO selected)	
	• r9722.0 = 1 (STO active)	

No.	Description	Status
3.	Deselect STO and check the following:	
	• No Safety faults and alarms (r0945[0...7], r2122[0...7], r9747[0...7])	
	• r9772.18 = r9872.18 = 0 (STO deselected via Safe Motion Monitoring)	
	• r9772.0 = r9772.1 = 0 (STO deselected and inactive – P1)	
	• r9872.0 = r9872.1 = 0 (STO deselected and inactive – P2)	
	• r9773.0 = r9773.1 = 0 (STO deselected and inactive – P1 + P2)	
	• r9720.0 = 1 (STO deselected)	
	• r9722.0 = 0 (STO inactive)	
	• r0046.0 = 1 (drive in "Switching On Inhibited" status)	
4.	Acknowledge "Switching On Inhibited" and run the drive. Ensure that the correct drive is running.	
	The following is tested: • Correct DRIVE-CLiQ wiring between Control Unit and Motor Module • Correct assignment of drive No. – Motor Module – motor • The hardware is functioning properly • Correct parameterization of the STO function	

Acceptance test for Safe Stop 1 without encoder (Extended Functions)

Table 8- 43 Function "Safe Stop 1 without encoder"

No.	Description	Status
Note: The acceptance test must be individually conducted for each configured control. The control can be realized via terminals or via PROFIsafe.		
1.	Initial state	
	• Drive in "Ready" state (p0010 = 0)	
	• Safety Integrated Extended Functions enabled (p9601.2 = 1)	
	• Safety functions enabled (p9501.0 = 1)	
	• Safety configured without encoder (p9506 = 1 or p9506 = 3)	
	• No Safety faults and alarms (r0945[0...7], r2122[0...7], r9747[0...7]); see note "non-critical alarms" in section Acceptance test.	
2.	Run the drive	
	• Check whether the correct drive is operational	
3.	Configure and activate trace recording	
	• Trigger: Trigger on variable - bit pattern (r9720.1 = 0)	
	• Record the following values: r9714[0], r9714[1], r9720, r9722	
	• Select the time interval and pretrigger so you can recognize the selection of SS1 and the transition into the subsequent STO state	
	For better analysis, display the following bit values:	
	• r9720.1 (deactivation SS1)	
	• r9722.0 (STO active)	
	• r9722.1 (SS1 active)	
	Select SS1 while the drive is moving	
	• The drive decelerates along the OFF3 ramp	
	• Subsequent state STO is activated	
	For better analysis, display the following bit values:	
	• r9720.1 (deactivation SS1)	
	• r9722.0 (STO active)	
	• r9722.1 (SS1 active)	
4.	Analyze trace:	
	• STO is triggered if the speed drops below the shutdown speed (p9360/9560)	
5.	Save/print the trace and add it to the acceptance report (refer to the example below)	
6.	Canceling SS1	
	• No Safety faults and alarms (r0945[0...7], r2122[0...7], r9747[0...7])	
	Acknowledge "Switching On Inhibited" and run the drive	
	• Ensure that the correct drive is running	

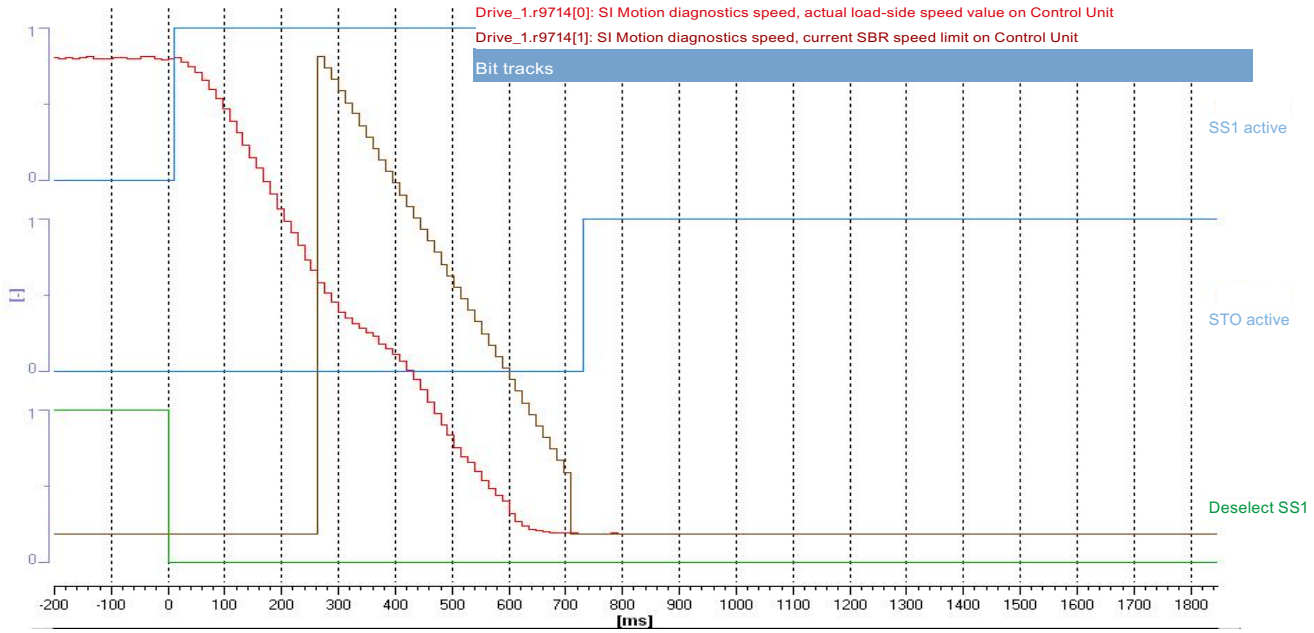

Figure 8-48 Example Trace SS1 without encoder

Trace evaluation:

- SS1 function is selected (time axis 0 ms; see bit "deselection SS1")
- Response bit "SS1 active" is set (time axis approx 20 ms)
- The drive decelerates along the configured OFF3 ramp (p1135)
- Recording r9714[0] indicates whether the OFF3 ramp is active
- STO is activated (time axis approx. 720 ms; see bit "STO active"); at this point the speed falls below the shutdown speed SS1 (p9560/p9360)
- A fault is generated if the envelope curve of function SAM (Drive_1.r9714[1]) is exceeded by the actual speed (r9714[0])

  In contrast to the SAM for Safety with encoder, this curve is not tracked according to actual speed but calculated using Safety parameters. Furthermore, this monitoring only becomes active after a configurable time has elapsed (in this case the time is 250 ms).

Note

Small time differences (of the order of 2 to 3 Safety clock cycles (here up to 36 ms)) are caused by internal calculations and do not present a problem.

Acceptance test for Safe Brake Control without encoder (Extended Functions)

Table 8- 44 Acceptance test "Safe Brake Control without encoder"

No.	Description	Status
Note: The acceptance test must be individually conducted for each configured control. The control can be realized via terminals or via PROFIsafe.		
1.	Initial state	
	• Drive in "Ready" state (p0010 = 0)	
	• Safety Integrated Extended Functions enabled (p9601.2 = 1)	
	• Safety functions enabled (p9501.0 = 1)	
	• Safety configured without encoder (p9506 = 1 or p9506 = 3)	
	• Enable SBC function (p9602 = 1, p9802 = 1)	
	• Brake as in sequence control or brake always released (p1215 = 1 or p1215 = 2)	
	• No Safety faults and alarms (r0945[0...7], r2122[0...7], r9747[0...7]); see note "non-critical alarms" in section Acceptance test.	
	• r9772.18 = r9872.18 = 0 (STO deselected via Safe Motion Monitoring)	
	• r9772.4 = r9872.4 = 0; r9773.4 = 0 (SBC not requested)	
	• r9720.0 = 1 (STO deselected)	
	• r9722.0 = 0 (STO inactive)	
2.	Run drive (if applied, brake is released)	
	• Check whether the correct drive is operational	
	Select STO when you issue the traversing command and check the following:	
	• Brake is applied	
	• No Safety faults and alarms (r0945[0...7], r2122[0...7], r9747[0...7])	
	• r9772.4 = r9872.4 = 1; r9773.4 = 1 (SBC requested)	
	• r9772.18 = r9872.18 = 1 (STO selected via Safe Motion Monitoring)	
	• r9720.0 = 0 (STO selected)	
	• r9722.0 = 1 (STO active)	
3.	Deselect STO and check the following:	
	• No Safety faults and alarms (r0945[0...7], r2122[0...7], r9747[0...7])	
	• r9772.4 = r9872.4 = 0; r9773.4 = 0 (SBC deselected)	
	• r9772.18 = r9872.18 = 0 (STO deselected via Safe Motion Monitoring)	
	• r9720.0 = 1 (STO deselected)	
	• r9722.0 = 0 (STO inactive)	
	• r0046.0 = 1 (drive in "Switching On Inhibited" status)	

No.	Description	Status
4.	Acknowledge "Switching On Inhibited" and run the drive. Check whether the correct drive is operational.	
	The following is tested: • The brake is connected properly • The hardware is functioning properly • The SBC is parameterized correctly • Forced dormant error detection for the brake control	

Acceptance test for Safely Limited Speed without encoder (Extended Functions)

SLS with stop response "STOP A"

Table 8- 45 Function "Safely Limited Speed without encoder" with "STOP A"

No.	Description	Status
Note: The acceptance test must be carried out separately for each configured control and each SLS speed limit used. Control may be via terminals or PROFIsafe.		
1.	Initial state	
	• Drive in "Ready" state (p0010 = 0)	
	• Safety Integrated Extended Functions enabled (p9601.2 = 1)	
	• Safety functions enabled (p9501.0 = 1)	
	• Safety configured without encoder (p9506 = 1 or p9506 = 3)	
	• No Safety faults and alarms (r0945[0...7], r2122[0...7], r9747[0...7]); see note "non-critical alarms" in section Acceptance test.	
2.	• It may be necessary to take measures in the higher-level control to be able to exceed the active speed limit. • Please ensure that the internal limits r9733.0 and r9733.1 are canceled by the selection "Start acceptance test".	
3.	Configure and activate trace recording	
	• Trigger: Trigger on variable - bit pattern (r9722.7 = 0)	
	• Record the following values: r9714[0], r9720, r9721, r9722	
	• Select the time interval and pretrigger so you can recognize when the active SLS limit has been exceeded and the subsequent drive responses	
	For better analysis, display the following bit values:	
	• r9720.4 (deselection SLS) and r9720.9/.10 (selection SLS level)	
	• r9721.12 (STOP A or B active)	
	• r9722.0 (STO active; set for STOP A)	
	• r9722.4 (SLS active) and r9722.9/.10 (active SLS level)	
	• r9722.7 (internal event; set on the occurrence of the first Safety message)	

No.	Description	Status
	Select SLS with level x	
	Switch on the drive and specify the setpoint above the SLS limit	
	• Check that the drive is moving, and after the SLS limit (p9331[x]/9531[x]) has been exceeded that it is coasting or a configured holding brake is applied	
	Check whether the following Safety messages are pending:	
	• C01714 (x00), C30714 (x00); x = 1...4 depending on the SLS level (safely limited speed exceeded)	
	• C01700, C30700 (STOP A initiated)	
4.	Analyze trace:	
	• If r9714[0] exceeds the active SLS limit, a Safety message (r9722.7 = 0) becomes active	
	• STOP A is initiated as a consequence	
5.	Save/print the trace and add it to the acceptance report (refer to the example below)	
6.	Deselect SLS and acknowledge Safety messages.	
	• No Safety faults and alarms (r0945[0...7], r2122[0...7], r9747[0...7])	
	• r0046.0 = 1 (drive in "Switching On Inhibited" status)	
	Acknowledge "Switching On Inhibited" and run the drive	
	• Check the drive is moving	

Example trace SLS without encoder (STOP A)

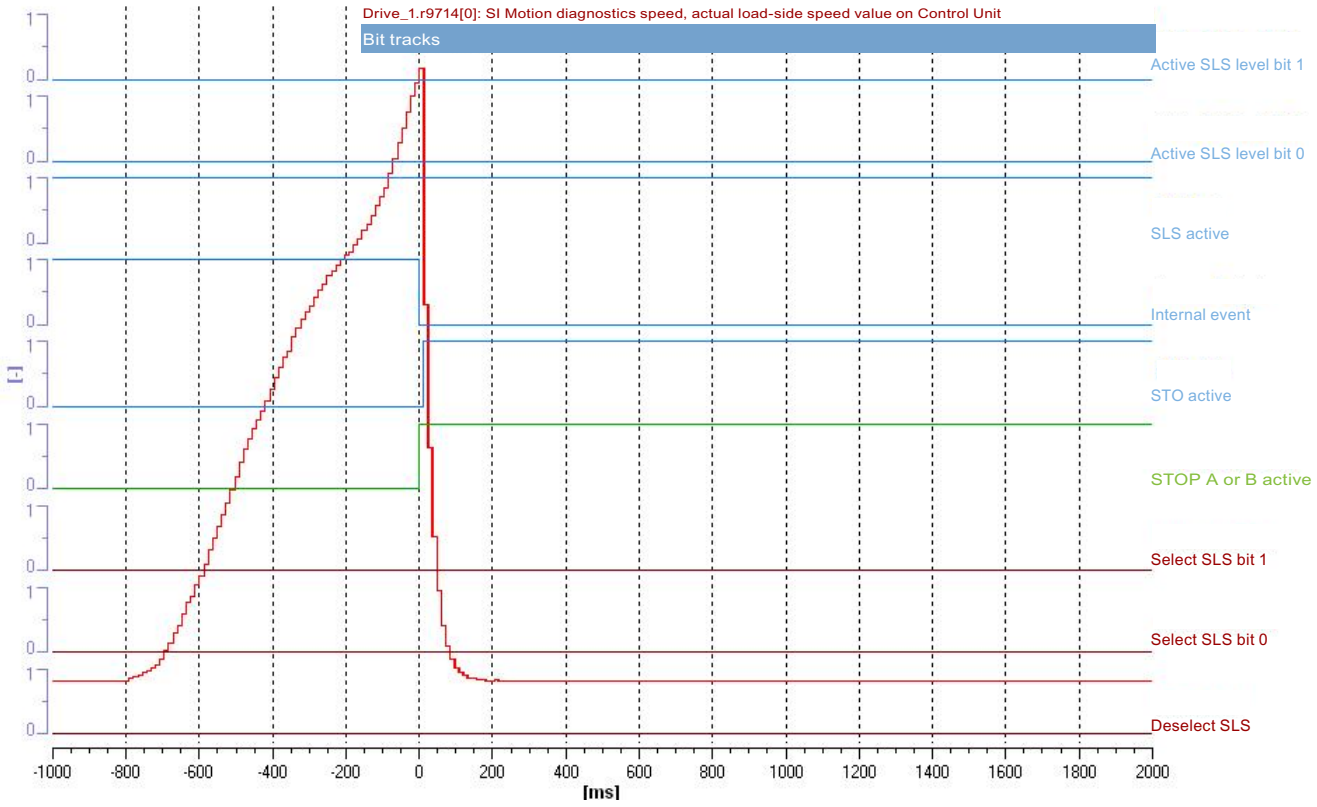

Figure 8-49 Example trace SLS without encoder with STOP A

Trace evaluation:

- SLS function with SLS level 1 is active (see bits "deselection SLS", "selection SLS bit 0", "selection SLS bit 1" and "SLS active", "active SLS level bit 0" and "active SLS level bit 1")
- Drive is accelerated beyond the SLS limit (time axis from approx. -800 ms)
- Exceeding of the limit is recognized (time axis 0 ms)
- Safety fault is initiated (time axis 0 ms; bit "internal event" is set to 0)
- Fault response STOP A is initiated (time axis 0 ms; see bit "STOP A or B active" and "STO active")
- Drive coasts (see red curve of r9714[0])

Note

Small time differences (of the order of 2 to 3 Safety clock cycles (here up to 36 ms)) are caused by internal calculations and do not present a problem.

SLS with stop response "STOP B"

Table 8- 46 Function "Safely Limited Speed without encoder" with "STOP B"

No.	Description	Status
Note: The acceptance test must be carried out separately for each configured control and each SLS speed limit used. Control may be via terminals or PROFIsafe.		
1.	Initial state	
	• Drive in "Ready" state (p0010 = 0)	
	• Safety Integrated Extended Functions enabled (p9601.2 = 1)	
	• Safety functions enabled (p9501.0 = 1)	
	• Safety configured without encoder (p9506 = 1 or p9506 = 3)	
	• No Safety faults and alarms (r0945[0...7], r2122[0...7], r9747[0...7]); see note "non-critical alarms" in section Acceptance test.	
2.	• It may be necessary to take measures in the higher-level control to be able to exceed the active speed limit. • Please ensure that the internal limits r9733.0 and r9733.1 are canceled by the selection "Start acceptance test".	
3.	Configure and activate trace recording	
	• Trigger: Trigger on variable - bit pattern (r9722.7 = 0)	
	• Record the following values: r9714[0], r9714[1], r9720, r9721, r9722	
	• Select the time interval and pretrigger so you can recognize when the active SLS limit has been exceeded and the subsequent drive responses	
	For better analysis, display the following bit values:	
	• r9720.4 (deselection SLS) and r9720.9/.10 (selection SLS level)	
	• r9721.12 (STOP A or B active)	
	• r9722.0 (STO active; set for STOP A)	
	• r9722.1 (SS1 active; set for STOP B)	
	• r9722.4 (SLS active) and r9722.9/.10 (active SLS level)	
	• r9722.7 (internal event; set on the occurrence of the first Safety message)	
	Select SLS with level x	
	Switch on the drive and specify the setpoint above the SLS limit	
	• Check that the drive is moving, and after the SLS limit (p9331[x]/9531[x]) has been exceeded that it is decelerated along the OFF3 ramp before STOP A becomes active	
	Check whether the following Safety messages are pending:	
	• C01714 (x00), C30714 (x00); x = 1...4 depending on the SLS level (safely limited speed exceeded)	
	• C01701, C30701 (STOP B initiated)	
	• C01700, C30700 (STOP A initiated)	

No.	Description	Status
4.	Analyze trace:	
	• If r9714[0] exceeds the active SLS limit, a Safety message (r9722.7 = 0) becomes active	
	• A STOP B is initiated as a consequence (with subsequent stop STOP A)	
5.	Save/print the trace and add it to the acceptance report (refer to the example below)	
6.	Deselect SLS and acknowledge Safety messages	
	• No Safety faults and alarms (r0945[0...7], r2122[0...7], r9747[0...7])	
	• r0046.0 = 1 (drive in "Switching On Inhibited" status)	
	Acknowledge "Switching On Inhibited" and run the drive	
	• Check the drive is moving	

Example trace SLS without encoder (STOP B)

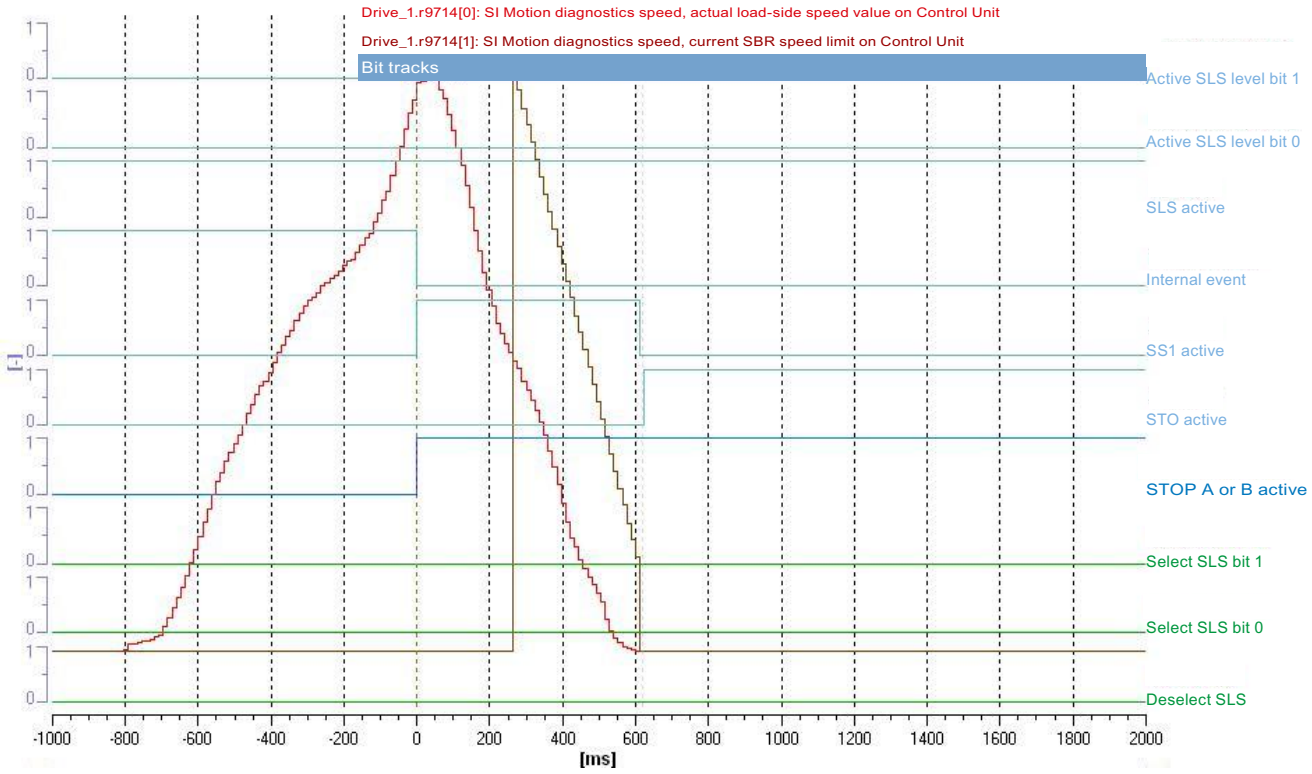

Figure 8-50 Example trace SLS without encoder with STOP B

Trace evaluation:

- SLS function with SLS level 1 is active (see bits "deselection SLS", "selection SLS bit 0", "selection SLS bit 1" and "SLS active", "active SLS level bit 0" and "active SLS level bit 1")
- Drive is accelerated beyond the SLS limit (time axis from approx. -800 ms)
- Exceeding of the limit is recognized (time axis 0 ms)
- Safety fault is initiated (time axis 0 ms; bit "internal event" is set to 0)
- Fault response STOP B is initiated (time axis 0 ms; see bit "STOP A or B active" and "SS1 active")
- Drive is decelerated to a standstill (see orange curve of r9714[0])
- Standstill reached (time axis from approx. 600 ms)
- STOP A (as follow-up response to STOP B) is activated (see bit "STO active"); at this point the speed falls below the shutdown speed SS1 (p9560/p9360)
- SBR monitoring is activated after 250 ms

Note

Small time differences (of the order of 2 to 3 Safety clock cycles (here up to 36 ms)) are caused by internal calculations and do not present a problem.

8.9.6 Completion of certificate

SI parameters

	Specified values checked? (check)	
	Yes	No
Control Unit		
Motor Module		

Checksums

Basic Functions + Extended Functions			
Drive name	Drive number	SI reference checksum SI parameters (Control Unit)	SI reference checksum SI parameters (Motor Module)
		p9799 =	p9899 =

Safety logbook

	Functional[1)]
Checksum for functional tracking of changes	r9781[0] =
Checksum for hardware dependent tracking of changes	r9781[1] =
Time stamp for functional tracking of changes	r9782[0] =
Time stamp for hardware dependent tracking of changes	r9782[1] =

1) These parameters can be found in the expert list of the Control Unit.

Data backup

	Storage medium			Storage location
	Type	Designation	Date	
Parameter				
PLC program				
Circuit diagrams				

Countersignatures

Commissioning engineer

This confirms that the tests and checks have been carried out properly.

Date	Name	Company/dept.	Signature

Machine manufacturer

This confirms that the parameters recorded above are correct.

Date	Name	Company/dept.	Signature

Communication 9

9.1 Fieldbus configuration

Fieldbus configuration

As an alternative, you can switch the fieldbus interface to communication via PROFIBUS or USS protocol.

Note

The PROFIdrive configuration is not active if you have set USS.

Configuration in STARTER

To configure the fieldbus interface in STARTER, proceed as follows:

1. Select **STARTER → Communication → Fieldbus**.

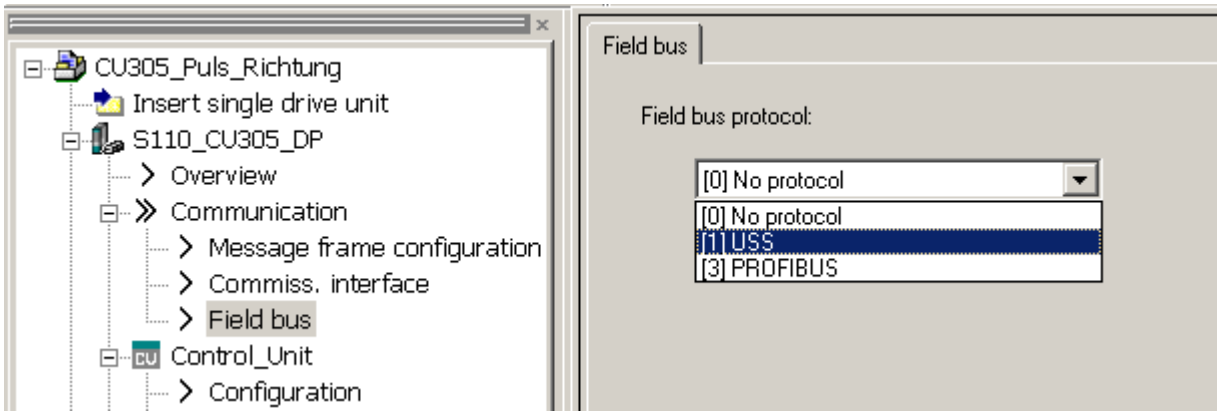

Figure 9-1 Fieldbus protocol selection

2. Select one of the following options from this dialog:
   - **No protocol**
   - **USS**

     Then define the basic settings for the USS interface in this dialog. Next, select **STARTER → <drive> → Communication** to define the data for the **send/receive directions, etc.** (see "Communication using USS" (Page 640)).
   - **PROFIBUS**

     Click **Telegram configuration** to define the length of the PZD telegram and specify additional data for **send/receive directions, etc.** (see "Communication via PROFIBUS DP" (Page 589)).

9.2 Communication according to PROFIdrive

9.2.1 General information about PROFIdrive for SINAMICS

General information

PROFIdrive V4.1 is the PROFIBUS profile for drive technology with a wide range of applications in production and process automation systems.

Note

PROFIdrive for drive technology is standardized and described in the following document:

References: /P5/ PROFIdrive Profile Drive Technology

Controller, Supervisor, and Drive Unit

- Properties of the Controller, Supervisor, and Drive Unit

Table 9- 1 Properties of the Controller, Supervisor, and Drive Unit

Properties	Controller, Supervisor	Drive Unit
As bus node	Active	Passive
Send messages	Permitted without external request	Only possible on request by master
Receive messages	Possible with no restrictions	Only receive and acknowledge permitted

- Controller (PROFIBUS: Master Class 1)

  This is typically a higher-level control in which the automation program runs.

  Example: SIMATIC S7 and SIMOTION

- Supervisor (PROFIBUS: Master Class 2)

  Devices for configuration, commissioning, operator control and monitoring during bus operation. Devices that only non-cyclically exchange data with Drive Units and Controllers.

  Examples: Programming devices, human machine interfaces

- Drive Unit (PROFIBUS: slave)

  The SINAMICS drive unit is with reference to PROFIdrive, a Drive Unit.

9.2.2 Application classes

Description

There are different application classes for PROFIdrive, depending on the scope and type of the application processes. There are a total of 6 application classes in PROFIdrive, of which 4 are discussed here.

Application class 1 (standard drive)

In the most basic case, the drive is controlled via a speed setpoint by means of PROFIBUS. In this case, speed control is fully handled in the drive controller. Typical application examples are basic frequency converters. Pump and fan control.

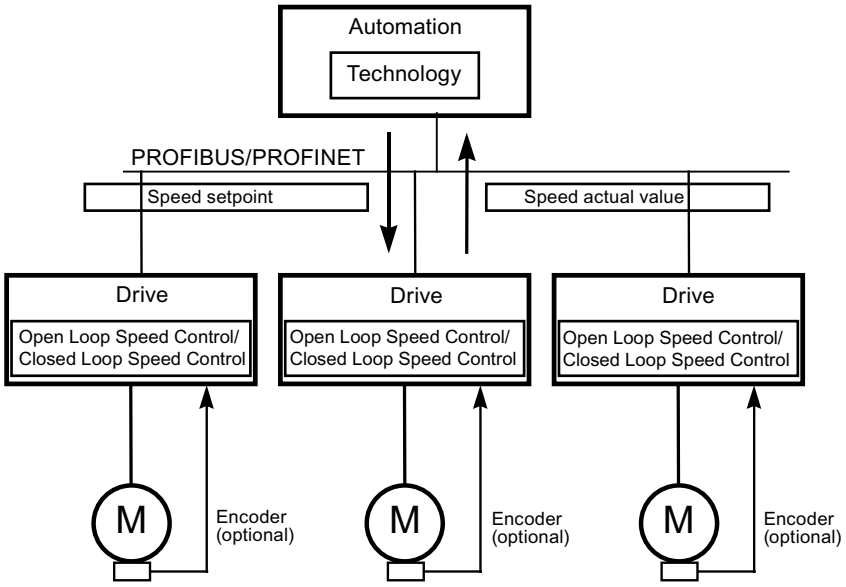

Figure 9-2 Application class 1

Application class 2 (standard drive with technology function)

The total process is subdivided into a number of small subprocesses and distributed among the drives. This means that the automation functions no longer reside exclusively in the central automation device but are also distributed in the drive controllers.
Of course, this distribution assumes that communication is possible in every direction, i.e. also cross-communication between the technology functions of the individual drive controllers. Specific applications include e.g. setpoint cascades, winders and speed synchronization applications for continuous processes with a continuous web.

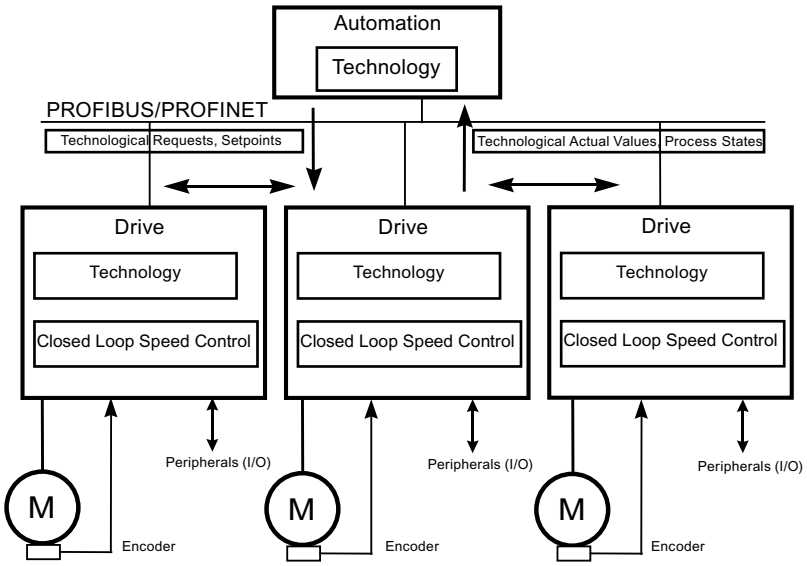

Figure 9-3 Application class 2

Application class 3 (positioning drive)

In addition to the drive control, the drive also includes a positioning control, so that the drive operates as an autonomous basic positioning drive, while the higher-level technological processes are executed on the controller. Positioning requests are transmitted to the drive controller via PROFIBUS and launched. Positioning drives have a very wide range of applications, e.g. the screwing and unscrewing of caps in a bottle filling plant or the positioning of cutters on a film cutting machine.

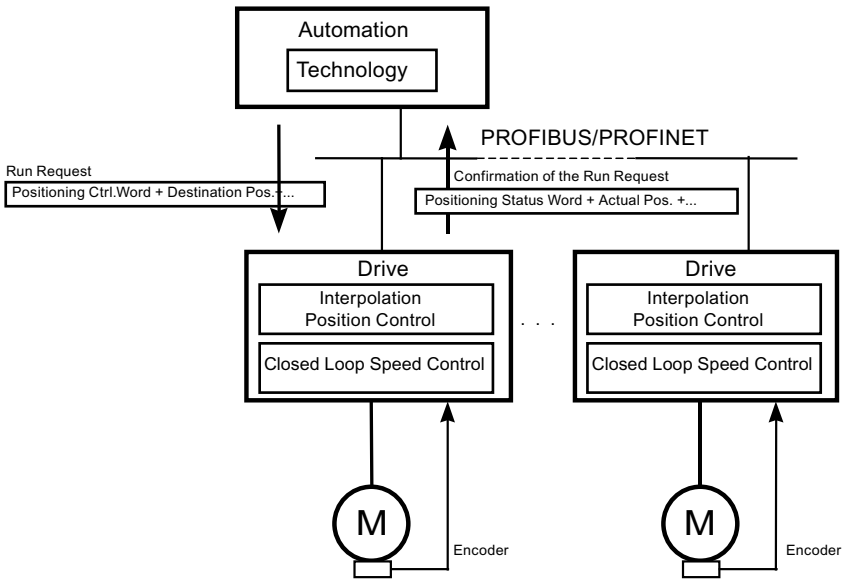

Figure 9-4 Application class 3

Application class 4 (central motion control)

This application class defines a speed setpoint interface with execution of the speed control on the drive and of the positioning control in the controller, such as is required for robotics and machine tool applications with coordinated motions on multiple drives.

Motion control is primarily implemented by means of a central numerical controller (CNC). The position control loop is closed via the bus. The synchronization of the position control cycles in the control and in the closed-loop controllers in the drive requires a clock synchronization of the kind provided by PROFIBUS DP.

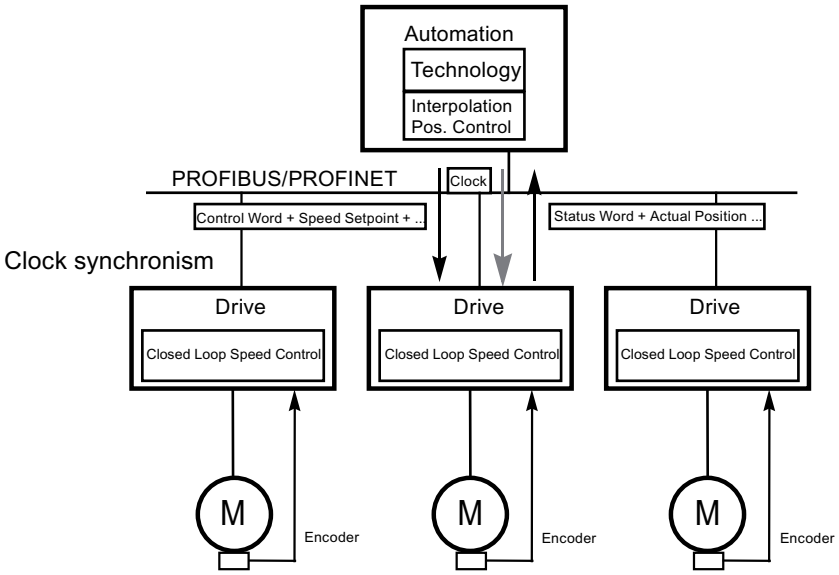

Figure 9-5 Application class 4

Dynamic Servo Control (DSC)

The PFOFIdrive profile contains the "Dynamic Servo Control" control concept. This can be used to significantly increase the dynamic stability of the position control loop in application class 4 with simple means.

For this purpose, the deadtime that is typical for a speed setpoint interface is minimized by an additional measure (see also chapter "Dynamic Servo Control").

Selection of telegrams as a function of the application class

The telegrams listed in the table below (see also chapter "Telegrams and process data") can be used in the following application classes:

Table 9- 2 Selection of telegrams as a function of the application class

Telegram (p0922 = x)	Description	Class 1	Class 2	Class 3	Class 4
1	Speed setpoint, 16 bit	x	x		
2	Speed setpoint, 32 bit	x	x		
3	Speed setpoint, 32 bit with 1 position encoder		x		x
4	Speed setpoint, 32 bit with 2 position encoders				x
7	Positioning, telegram 7 (basic positioner)			x	
9	Positioning, telegram 9 (basic positioner with direct input)			x	
102	Speed setpoint, 32 bit with 1 position encoder and torque reduction				x
103	Speed setpoint, 32 bit with 2 position encoders and torque reduction				x
110	Basic positioner with MDI, override and XIST_A			x	
111	Basic positioner in MDI mode			x	
390	Control Unit with digital inputs/outputs	x	x	x	x
391	Control Unit with digital inputs/outputs and 2 measuring probes	x	x	x	x
392	Control Unit with digital inputs/outputs and 4 measuring probes	x	x	x	x
393	Control Unit with digital inputs/outputs, analog input and 4 measuring probes	x	x	x	x
394	Control Unit with digital inputs/outputs	x	x	x	x
999	Free telegrams	x	x	x	x

9.2.3 Cyclic communication

Cyclic communication is used to exchange time-critical process data.

9.2.3.1 Telegrams and process data

General information

The selection of a telegram via p0922 determines which data on the drive unit side (Control Unit) will be transferred.

From the perspective of the drive unit, the received process data comprises the receive words and the process data to be sent the send words.

The receive and send words comprise the following elements:

- Receive words: Control words or setpoints
- Send words: Status words or actual values

What telegrams are available?

1. Standard telegrams

   The standard telegrams are structured in accordance with the PROFIdrive Profile. The internal process data links are set up automatically in accordance with the telegram number setting.

   The following standard telegrams can be set via p0922:

   – 1 Speed setpoint, 16 bit
   – 2 Speed setpoint, 32 bit
   – 3 Speed setpoint, 32 bit with 1 position encoder
   – 4 Speed setpoint, 32 bit with 2 position encoders
   – 7 Positioning, telegram 7 (basic positioner)
   – 9 Positioning, telegram 9 (basic positioner with direct input)

2. Manufacturer-specific telegrams

   The manufacturer-specific telegrams are structured in accordance with internal company specifications. The internal process data links are set up automatically in accordance with the telegram number setting.

   The following vendor-specific telegrams can be set via p0922:

   – 102 Speed setpoint, 32 bit with 1 position encoder and torque reduction
   – 103 Speed setpoint, 32 bit with 2 position encoders and torque reduction
   – 110 Positioning, telegram 10 (basic positioner with MDI, override and XIST_A)
   – 111 Positioning, telegram 11 (basic positioner in MDI mode)
   – 390 Control Unit with digital inputs/outputs
   – 391 Control Unit with digital inputs/outputs and 2 measuring probes
   – 392 Control Unit with digital inputs/outputs and 4 measuring probes
   – 393 Control Unit with digital inputs/outputs, analog input and 4 measuring probes
   – 394 Control Unit with digital inputs/outputs

3. Free telegrams (p0922 = 999)

   The send and receive telegrams can be configured as required by using BICO technology to interconnect the send and receive process data.

	SERVO	CU_S110
DWORD connector output	r2060[0 ... 14] 1)	-
WORD connector output	r2050[0 ... 15] 1)	r2050[0 ... 4]
Binector output	r2090.0 ... 15 r2091.0 ... 15 r2092.0 ... 15 r2093.0 ... 15	r2090.0 ... 15 r2091.0 ... 15
Free binector-connector converter	p2080[0 ... 15], p2081[0 ... 15], p2082[0 ... 15], r2089[0 ... 4]	
DWORD connector input	p2061[0 ... 14]	-
WORD connector input	p2051[0 ... 18]	p2051[0 ... 14]
1) Each PZD word can be assigned a word or a double word. Only one of the two interconnection parameters r2050 or r2060 can have a value ≠ 0 for a PZD word.		

Telegram interconnections

When you change p0922 = 999 (factory setting) to p0922 ≠ 999, the telegrams are interconnected and blocked automatically.

Note

Telegram 111 is the exception: Here, PZD12 in the transmit telegram or PZD12 in the receive telegram can be interconnected as required.

When you change p0922 ≠ 999 to p0922 = 999, the previous telegram interconnection is retained and can be changed.

Note

If p0922 = 999, a telegram can be selected in p2079. A telegram interconnection is automatically made and blocked. The telegram can also be extended.

This is an easy method of creating extended telegram interconnections on the basis of existing telegrams.

The telegram structure

The parameter p0978 contains the sequence of DOs that use a cyclic PZD exchange. A zero delimits the DOs that do not exchange any PZDs.

If the value 255 is written to p0978, the drive unit emulates an empty drive object that is visible to the PROFIdrive Master. This permits cyclic communication of a PROFIdrive Master

- with unchanged configuration to drive units that have a different number of drive objects.
- with deactivated DOs without having to change the project.

Note

- The following must apply to ensure conformity with the PROFIdrive profile:
  - Interconnect PZD receive word 1 as control word 1 (STW1).
  - Interconnect PZD send word 1 as status word 1 (STW1).

    Use WORD format for PZD1.
- One PZD = one word.

  Only one of the interconnection parameters (p2051 or p2061) can have the value ≠ 0 for a PZD word.
- Physical word and double word values are inserted in the telegram as referenced variables.

  p200x are relevant as reference values (telegram contents = 4000 hex or 4000 0000 hex for double words if the input variable has a value of p200x).

Structure of the telegrams

You can find an overview of the structure of telegrams in function diagrams 2420, 2422, and 2423 in the SINAMICS S110 List Manual.

Depending on the drive object, only certain telegrams can be used:

Drive object	Telegrams (p0922)
SERVO	1, 2, 3, 4, 102, 103, 999
SERVO (EPOS)	7, 9, 110, 111, 999
CU_S110	390, 391, 392, 393, 394, 999

Depending on the drive object, the following maximum number of process data items can be transmitted for user-defined telegram structures:

Drive object	Max. number of PZD for sending / receiving
• SERVO	Send 19, receive 16
• CU_S110	Send 15, receive 5

Interface Mode

Interface Mode is used for adjusting the assignment of the control and status words in line with other drive systems and standardized interfaces.

The mode can be set as follows:

Value	Interface Mode
p2038 = 0	SINAMICS (factory setting)
p2038 = 1	SIMODRIVE 611 universal

Procedure:

1. Set p0922 ≠ 999.
2. p2038 = set required interface mode.

If you set telegrams 102 and 103, Interface Mode is set by default (p2038 = 1) and cannot be changed.

Interface Mode is also set by default with positioning telegrams (7, 9, 110, and 111) and cannot be changed (p2038 = 0 set).

When a telegram that specifies the Interface Mode (e.g. p0922 = 102) is changed to a different telegram (e.g. p0922 = 3), the setting in p2038 is retained.

Function diagrams (see SINAMICS S110 List Manual)

- 2410 PROFIBUS address, diagnostic
- ...
- 2498 E_DIGITAL interconnection

9.2.3.2 Description of control words and setpoints

Note

This chapter describes the assignment and meaning of the process data in SINAMICS interface mode (p2038 = 0).

The reference parameter is also specified for the relevant process data. The process data are generally normalized in accordance with parameters p2000 to r2004.

The following scalings apply:

A temperature of 100°C = 100% and 0°C = 0%

An electrical angle of 90° = 100 % and 0° = 0%.

Overview of control words and setpoints

Table 9- 3 Overview of control words and setpoints, profile-specific

Abbreviation Signal	Name	Signal number	Data type 1)	Interconnection parameters
STW1	Control word 1	1	U16	(bit-serial)2)
STW2	Control word 2	3	U16	(bit-serial)2)
NSOLL_A	Speed setpoint A (16-bit)	5	I16	p1155 p1070(ext.setp.)
NSOLL_B	Speed setpoint B (32-bit)	7	I32	p1155 p1070 (ext.setp.)
G1_STW	Encoder 1 control word	9	U16	p0480[0]
G2_STW	Encoder 2 control word	13	U16	p0480[1]
A_DIGITAL	Digital output (16 bits)	22	U16	(bit-serial)
SATZANW	EPOS block selection	32	I32	(bit-serial)
MDI_TARPOS	MDI position	34	I32	p2642
MDI_VELOCITY	MDI velocity	35	I32	p2643
MDI_ACC	MDI acceleration	36	I16	p2644
MDI_DEC	MDI delay	37	I16	p2645
MDI_MOD	MDI mode specification	38	U16	(bit-serial)

1) Data type according to PROFIdrive profile V4:
I16 = Integer16, I32 = Integer32, U16 = Unsigned16, U32 = Unsigned32
2) Bit-serial interconnection: refer to the following pages

Table 9- 4 Overview of control words and setpoints, manufacturer-specific

Abbreviation	Name	Signal number	Data type 1)	Interconnection parameters
MOMRED	Torque reduction	101	I16	p1542
MT-STW	Probe control word	130	U16	P0682
POS_STW	Positioning control word	203	U16	(bit-serial)
OVERRIDE	Override in positioning mode	205	I16	p2646
POS_STW1	Positioning control word 1	220	U16	(bit-serial)
POS_STW2	Positioning control word 2	222	U16	(bit-serial)
MDI_MODE	MDI mode	229	U16	p2654
CU_STW1	Control word for Control Unit (CU)	500	U16	(bit-serial)
1) Data type according to PROFIdrive profile V4: I16 = Integer16, I32 = Integer32, U16 = Unsigned16, U32 = Unsigned32 2) Bit-serial interconnection: Refer to the following pages				

STW1 (control word 1)

See function diagram [2442]

Table 9- 5 Description of STW1 (control word 1)

Bit	Meaning	Remarks		Parameter
0	ON/OFF1	0/1	ON Pulse enable possible	BI: p0840
		0	OFF1 Braking with the ramp-function generator, then pulse suppression and switching on inhibited.	
1	OFF2	1	No OFF2 Enable possible	BI: p0844
		0	Immediate pulse suppression and switching on inhibited	
	Note: Control signal OFF2 is generated by ANDing BI: p0844 and BI: p0845.			
2	OFF3	1	No OFF3 Enable possible	BI: p0848
		0	Quick stop (OFF3) Braking with OFF3 ramp p1135, then pulse suppression and switching on inhibited.	
	Note: Control signal OFF3 is generated by ANDing BI: p0848 and BI: p0849.			
3	Enable operation	1	Enable operation Pulse enable possible	BI: p0852, p1224.1 (with extended brake control only)
		0	Disable operation Cancel pulses	
4	Enable ramp-function generator	1	Operating condition Ramp-function generator enable possible	BI: p1140

Bit	Meaning	Remarks		Parameter
		0	Inhibit ramp-function generator Set ramp-function generator output to zero	
5	Restart ramp-function generator	1	Restart ramp-function generator	BI: p1141
		0	Freeze ramp-function generator	
	Note: The ramp-function generator cannot be frozen via p1141 in jog mode (r0046.31 = 1).			
6	Enable speed setpoint	1	Enable setpoint	BI: p1142
		0	Inhibit setpoint Set ramp-function generator input to zero	
7	Acknowledge fault	0/1	Acknowledge fault	BI: p2103
		0	No effect	
	Note: Faults are acknowledged at a 0/1 edge via BI: p2103.			
8..9	Reserved	-	-	-
10	Master control by PLC	1	Master control by PLC This signal must be set so that the process data transferred via PROFIdrive are accepted and become effective.	BI: p0854
		0	PLC has no master control Process data transferred via PROFIdrive are rejected - i.e. assumed to be zero.	
	Note: This bit should not be set to "1" until the PROFIdrive has returned an appropriate status via ZSW1.9 = "1".			
11	Setpoint inversion (Only with "extended setpoint channel" and "extended ramp-function generator")	1	Setpoint inversion	BI: p1113
		0	No setpoint inversion	
12	Reserved	-	-	-
13	Motorized potentiometer, setpoint, raise (Only with "extended setpoint channel" and "extended ramp-function generator")	1	Motorized potentiometer, setpoint, raise	BI: p1035
		0	Motorized potentiometer setpoint raise not selected	
14	Motorized potentiometer, setpoint, lower (Only with "extended setpoint channel" and "extended ramp-function generator")	1	Motorized potentiometer, setpoint, lower	BI: p1036
		0	Motorized potentiometer setpoint lower not selected	
15	Reserved	-	-	-

STW1 (control word 1), positioning mode, p0108.4 = 1

See function diagram [2475]

Table 9- 6 Description of STW1 (control word 1), positioning mode

Bit	Meaning	Remarks		Parameter
0	ON/OFF1	0/1	ON Pulse enable possible	BI: p0840
		0	OFF1 Braking with the ramp-function generator, then pulse suppression and switching on inhibited	
1	OFF2	1	No OFF2 Enable possible	BI: p0844
		0	OFF2 Immediate pulse suppression and switching on inhibited	
	Note: Control signal OFF2 is generated by ANDing BI: p0844 and BI: p0845.			
2	OFF3	1	No OFF3 Enable possible	BI: p0848
		0	Quick stop (OFF3) Braking with OFF3 ramp p1135, then pulse suppression and "switching-on inhibited"	
	Note: Control signal OFF3 is generated by ANDing BI: p0848 and BI: p0849.			
3	Enable operation	1	Enable operation Pulse enable possible	BI: p0852
		0	Disable operation Cancel pulses	
4	Reject traversing task	1	Do not reject traversing task	BI: p1140
		0	Reject traversing task	
5	Intermediate stop	1	No intermediate stop	BI: p2640
		0	Intermediate stop	
6	Activate traversing task	0/1	Enable setpoint	BI: p2631, p2650
		0	No effect	
	Note: The interconnection p2649 = 0 is also made.			
7	Acknowledge fault	0/1	Acknowledge fault	BI: p2103
		0	No effect	
8	Jog 1	1	Jog 1 ON See also SINAMICS S110 List Manual, function diagram 3610	BI: p2589
		0	No effect	
9	Jog 2	1	Jog 2 ON See also SINAMICS S110 List Manual, function diagram 3610	BI: p2590
		0	No effect	

Bit	Meaning	Remarks		Parameter
10	Master control by PLC	1	Control by PLC This signal must be set so that the process data transferred via PROFIdrive are accepted and become effective.	BI: p0854
		0	No control by PLC Process data transferred via PROFIdrive are rejected - i.e. assumed to be zero.	
	Note: This bit should not be set to "1" until the PROFIdrive has returned an appropriate status via ZSW1.9 = "1".			
11	Start referencing	1	Start referencing	BI: p2595
		0	Stop referencing	
12	Reserved	-	-	-
13	External block change	0/1	External set change is initiated	BI: 2632
		0	No effect	
14	Reserved	-	-	-
15	Reserved	-	-	-

STW2 (control word 2)

See function diagram [2444]

Table 9- 7 Description of STW2 (control word 2)

Bit	Meaning	Remarks		Parameter
0	Drive data set selection DDS bit 0	-	Drive data set selection (5 bit counter)	BI: p0820[0]
1...6	Reserved	-	-	-
7	Parking axis	1	Request parking axis (handshake with ZSW2 bit 7)	BI: p0897
		0	No request	
8	Travel to fixed stop (not with telegrams 9, 110)	1	Select "Travel to fixed stop" The signal must be set before the fixed stop is reached.	BI: p1545
		1/0	Deselect "Travel to fixed stop" The signal must be set before the fixed stop is reached	
9..10	Reserved	-	-	-
11	Motor changeover	0/1	Motor changeover complete	BI: p0828[0]
		0	No effect	
12	Master sign-of-life bit 0	-	User data integrity (4-bit counter)	CI: p2045
13	Master sign-of-life bit 1	-		
14	Master sign-of-life bit 2	-		
15	Master sign-of-life bit 3	-		

NSOLL_A (speed setpoint A (16-bit))

- Speed setpoint with a 16-bit resolution with sign bit.
- Bit 15 determines the sign of the setpoint:
  - Bit = 0 → Positive setpoint
  - Bit = 1 → Negative setpoint
- The speed is normalized via p2000.

  NSOLL_A = 4000 hex or 16384 dec ≙ speed in p2000

NSOLL_B (speed setpoint B (32-bit))

- Speed setpoint with a 32-bit resolution with sign bit.
- Bit 31 determines the sign of the setpoint:
  - Bit = 0 → Positive setpoint
  - Bit = 1 → Negative setpoint
- The speed is normalized via p2000.

  NSOLL_B = 4000 0000 hex or 1 073 741 824 dec ≙ speed in p2000

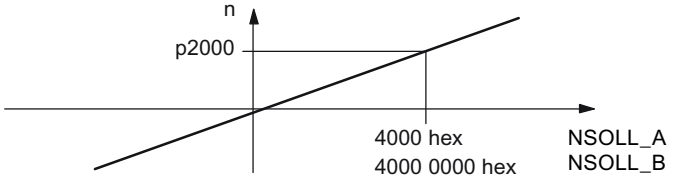

Figure 9-6 Normalization of speed

Gn_STW (encoder n control word)

This process data belongs to the encoder interface.

A_DIGITAL
MT_STW
CU_STW1

These process data are part of the central process data.

MOMRED (torque reduction)

This setpoint can be used to reduce the torque limit currently active on the drive.

When you use manufacturer-specific PROFIdrive telegrams with the MOMRED control word, the signal flow is automatically interconnected up to the point where the torque limit is scaled.

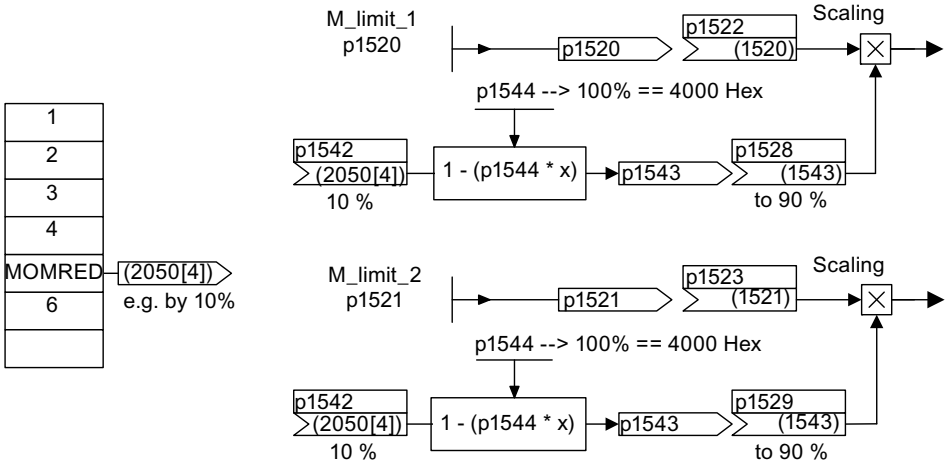

Figure 9-7 MOMRED setpoint

MOMRED specifies the percentage by which the torque limit is to be reduced. This value is converted internally to the amount by which the torque is to be reduced and normalized via p1544.

SATZANW (positioning mode, p0108.4 =1)

See function diagram [2476]

Table 9- 8 Description of BLOCKSEL (positioning mode, p0108.4 =1)

Bit	Meaning	Remarks		Parameter
0	1 = block selection, bit 0 (2^0)	Block selection Traversing block 0 to 63		BI: p2625
1	1 = block selection, bit 1 (2^1)			BI: p2626
2	1 = block selection, bit 2 (2^2)			BI: p2627
3	1 = block selection, bit 3 (2^3)			BI: p2628
4	1 = block selection, bit 4 (2^4)			BI: p2629
5	1 = block selection, bit 5 (2^5)			BI: p2630
6 ... 14	Reserved	-	-	-
15	Activate MDI	1	Activate MDI	p2647
		0	Deactivate MDI	
Note: See also: Basic positioner section				

POS_STW (positioning mode, p0108.4 =1)

See function diagram [2462].

Table 9- 9 Description of POS_STW (positioning mode, p0108.4 = 1)

Bit	Meaning	Remarks		Parameter
0	Tracking mode	1	Activate tracking mode	BI: 2655
		0	Tracking mode deactivated	
1	Set reference point	1	Set reference point	BI: 2596
		0	Do not set reference point	
2	Reference cam	1	Reference cam active	BI: 2612
		0	Reference cam not active	
3, 4	Reserved	-	-	-
5	Incremental jog	1	Incremental jog active	BI: 2591
		0	Jog velocity active	
6 ... 15	Reserved	-	-	-
Note: See also: Basic positioner chapter				

POS_STW1 (control word 1, positioning mode, r0108.4 = 1)

See function diagram [2463].

Table 9- 10 Description of POS_STW1 (control word 1)

Bit	Meaning	Remarks		Parameter
0	EPOS traversing block selection bit 0	Traversing block selection		BI: p2625
1	EPOS traversing block selection bit 1			BI: p2626
2	EPOS traversing block selection bit 2			BI: p2627
3	EPOS traversing block selection bit 3			BI: p2628
4	EPOS traversing block selection bit 4			BI: p2629
5	EPOS traversing block selection bit 5			BI: p2630
6...7	Reserved	-	-	-
8	EPOS direct setpoint input/MDI positioning type Set the signal source for the positioning type in mode "Direct setpoint input/MDI".	1	Absolute positioning is selected.	BI: p2648
		0	Relative positioning is selected.	
9	EPOS direct setpoint input/MDI, positive direction selection	0/0 1/0 0/1 1/1	During "set-up": If both directions (p2651, p2652) are selected or deselected, the axis remains stationary. During "positioning": BI: p2651 / BI: p2652 Position absolutely via shortest route. Position absolutely in the positive direction. Position absolutely in the negative direction. Position absolutely via shortest route.	BI: p2651
10	EPOS direct setpoint input/MDI, negative direction selection			BI: p2652
11	Reserved	-	-	-
12	EPOS direct setpoint input/MDI, acceptance method selection Set the signal source for the method of accepting values in mode "Direct setpoint input/MDI".	1	Continuous acceptance of values Please see the description in the List Manual.	BI: p2649
		0	Values are only accepted when BI: p2650 = 0/1 signal (rising edge).	
13	Reserved	-	-	-
14	EPOS direct setpoint input/MDI, setup selection Set the signal source for set-up in mode "Direct setpoint input/MDI".	1	Set-up selected.	BI: p2653
		0	Positioning selected.	
15	EPOS direct setpoint input/MDI selection Set the signal source for the selection of mode "Direct setpoint input/MDI".	-	-	BI: p2647

POS_STW2 (control word 2, positioning mode, p0108.4 =1)

See function diagram [2464].

Table 9- 11 Description of POS_STW2 (control word 2, positioning mode, p0108.4 = 1)

Bit	Meaning	Remarks		Parameter
0	Tracking mode	1	Activate tracking mode	BI: p2655
		0	Tracking mode deactivated	
1	Set reference point	1	Set reference point	BI: p2596
		0	Do not set reference point	
2	Reference cam	1	Reference cam active	BI: p2612
		0	Reference cam not active	
3..4	Reserved	-	-	-
5	Incremental jog	1	Incremental jog active	BI: p2591
		0	Jog velocity active	
6..7	Reserved	-	-	-
8	Reference type selection	1	Flying referencing	BI: p2597
		0	Reference point approach	
9	Reference point approach start direction	1	Start in negative direction	BI: p2604
		0	Start in positive direction	
10	LR measuring probe evaluation, selection Set the signal source for selection of the measuring probe.	1	Measuring probe 2 is activated when BI: p2509 = 0/1 edge activated.	BI: p2510
		0	Measuring probe 1 is activated when BI: p2509 = 0/1 edge activated.	
11	LR measuring probe evaluation edge Set the signal source for edge evaluation of the measuring probe.	1	Falling edge of measuring probe (p2510) is activated when BI: p2509 = 0/1 edge activated.	BI: p2511
		0	Rising edge of measuring probe (p2510) is activated when BI: p2509 = 0/1 edge activated.	
12...13	Reserved	-	-	-
14	EPOS software limit switch activation Set the signal source for activation of "Software limit switches".	1	Axis is referenced (r2684.11 = 1) and BI: p2582 = 1 signal.	BI: p2582
		0	Software limit switches inoperative: - Modulo offset active (BI: p2577 = 1 signal). - Reference point approach is executed.	
15	EPOS STOP cam activation Set the signal source for activation of "STOP cams".	1	BI: p2568 = 1 signal → Evaluation of the STOP cam minus (BI: p2569) and STOP cam plus (BI: p2570) is active.	BI: p2568
		0	Evaluation of STOP cams is not active	
Note: See also: Basic positioner chapter				

OVERRIDE (Pos Velocity Override)

This process data defines the percentage for the velocity override.

Normalization: 4000 hex (16384 dec) = 100 %

Range of values: 0 ... 7FFF hex

Values outside this range are interpreted as 0%.

MDI_TARPOS (MDI position)

This process data defines the position for MDI sets.

Normalization: 1 corresponds to 1 LU

MDI_VELOCITY (MDI velocity)

This process data defines the velocity for MDI sets.

Normalization: 1 corresponds to 1000 LU/min

MDI_ACC (MDI acceleration)

This process data defines the acceleration for MDI sets.

Normalization: 4000 hex (16384 dec) = 100 %

The value is restricted to 0.1 ... 100% internally.

MDI_DEC (MDI deceleration override)

This process data defines the percentage for the deceleration override for MDI sets.

Normalization: 4000 hex (16384 dec) = 100 %

The value is restricted to 0.1 ... 100% internally.

MDI_MOD

For a detailed table see function diagram [2480].

Table 9- 12 Signal targets for MDI_MOD (positioning mode, r0108.4 = 1)

Bit	Meaning				Interconnection parameter
0	0 = Relative positioning is selected 1 = Absolute positioning is selected				p2648 = r2094.0
1	0 = Absolute positioning through the shortest distance				p2651 = r2094.1
2	1 = Absolute positioning in the positive direction 2 = Absolute positioning in the negative direction 3 = Absolute positioning through the shortest distance				p2652 = r2094.2
3...15	Reserved	-	-	-	-

MDI_MODE

This process data defines the mode for MDI sets.

Precondition: p2654 > 0
MDI_MODE = xx0x hex → Absolute
MDI_MODE = xx1x hex → Relative
MDI_MODE = xx2x hex → Abs_pos (only for modulo correction)
MDI_MODE = xx3x hex → Abs_neg (only for modulo correction)

9.2.3.3 Description of status words and actual values

Description of status words and actual values

Note

This chapter describes the assignment and meaning of the process data in SINAMICS interface mode (p2038 = 0).

The reference parameter is also specified for the relevant process data. The process data are generally normalized in accordance with parameters p2000 to r2004.

The following scalings also apply:
A temperature of 100°C = 100%
An electrical angle of 90° also = 100%.

Overview of status words and actual values

Table 9- 13 Overview of status words and actual values, profile-specific

Abbreviation	Name	Signal number	Data type 1)	Interconnection parameters
ZSW1	Status word 1	2	U16	r2089[0]
ZSW2	Status word 2	4	U16	r2089[1]
NACT_A	Speed setpoint A (16 bit)	6	I16	r0063
NACT_B	Speed setpoint B (32 bit)	8	I32	r0063
G1_ZSW	Encoder 1 status word	10	U16	r0481[0]
G1_XIST1	Encoder 1 actual position value 1	11	U32	r0482[0]
G1_XIST2	Encoder 1 actual position value 2	12	U32	r0483[0]
G2_ZSW	Encoder 2 status word	14	U16	r0481[1]
G2_XIST1	Encoder 2 actual position value 1	15	U32	r0482[1]
G2_XIST2	Encoder 2 actual position value 2	16	U32	r0483[1]
E_DIGITAL	Digital inputs (16 bits)	21	U16	r2089[2]
XIST_A	Pos position actual value	28	I32	r2521[0]
AKTSATZ	Pos selected block	33	U16	r2670
1) Data type according to PROFIdrive profile V4: I16 = Integer16, I32 = Integer32, U16 = Unsigned16, U32 = Unsigned32 2) Bit-serial interconnection: Refer to the following pages, r2089 via binector-connector converter				

Table 9- 14 Overview of status words and actual values, manufacturer-specific

Abbreviation	Name	Signal number	Data type 1)	Interconnection parameters
MELDW	Message word	102	U16	r2089[2]
MT_ZSW	Probe status word	131	U16	r0688
MT1_ZS_F	Probe 1 time stamp falling edge	132	U16	r0687[0]
MT1_ZS_S	Probe 1 time stamp rising edge	133	U16	r0686[0]
MT2_ZS_F	Probe 2 time stamp falling edge	134	U16	r0687[1]
MT2_ZS_S	Probe 2 time stamp rising edge	135	U16	r0686[1]
POS_ZSW	Positioning status word	204	U16	r2683
POS_ZSW1	Positioning status word 1	221	U16	r2089[3]
POS_ZSW2	Positioning status word 2	223	U16	r2089[4]
FAULT_CODE	Fault code	301	U16	r2131
WARN_CODE	Alarm code	303	U16	r2132
CU_ZSW1	Status word for Control Unit (CU)	501	U16	r2089[1]
1) Data type according to PROFIdrive profile V4: I16 = Integer16, I32 = Integer32, U16 = Unsigned16, U32 = Unsigned32 2) Bit-serial interconnection: Refer to the following pages, r2089 via binector-connector converter				

ZSW1 (status word 1)

See function diagram [2452]

Table 9- 15 Description of ZSW1 (status word 1)

Bit	Meaning	Remarks		Parameter
0	Ready for switching on	1	Ready for switching on Power supply on, electronics initialized, line contactor released if necessary, pulses inhibited.	BO: r0899.0
		0	Not ready for switching on	
1	Ready for operation	1	Ready for operation Voltage at Line Module (i.e. line contactor closed (if used)), field being built up.	BO: r0899.1
		0	Not ready for operation Reason: No ON command present	
2	Operation enabled	1	Operation enabled Enable electronics and pulses, then ramp up to active setpoint.	BO: r0899.2
		0	Operation inhibited	
3	Fault active	1	Fault active The drive is faulty and, therefore, out of service. The drive switches to "switching on inhibited" once the fault has been acknowledged and the cause has been remedied. The active faults are stored in the fault buffer.	BO: r2139.3
		0	No fault active No active fault in the fault buffer.	
4	Coasting down active (OFF2)	1	No OFF2 active	BO: r0899.4
		0	Coasting down active (OFF2) An OFF2 command is active.	
5	Quick stop active (OFF3)	1	No OFF3 active	BO: r0899.5
		0	Quick stop active (OFF3) An OFF3 command is active.	
6	Switching on inhibited	1	Switching on inhibited A restart is only possible by means of OFF1 and then ON.	BO: r0899.6
		0	No "switching on inhibited" Switching on is possible.	
7	Alarm active	1	Alarm active The drive is operational again. No acknowledgement necessary. The active alarms are stored in the alarm buffer.	BO: r2139.7
		0	No alarm active No active alarm in the alarm buffer.	

Bit	Meaning	Remarks		Parameter
8	Speed setpoint-actual value deviation within the tolerance bandwidth	1	Setpoint/actual value monitoring within tolerance band Actual value within a tolerance band; dynamic overshoot or undershoot for t < t_{max} permissible, e.g. n = n_{set}± f = f_{set}±, etc., t_{max} can be parameterized	BO: r2197.7
		0	Setpoint/actual value monitoring not within tolerance band	
9	Control request to PLC	1	Control requested The PLC is requested to assume control. Condition for applications with isochronous mode: Drive synchronized with PLC system.	BO: r0899.9
		0	Local operation Control only possible on device	
10	f or n comparison value reached or exceeded	1	f or n comparison value reached or exceeded.	BO: r2199.1
		0	f or n comparison value not reached.	
	Note: The message is parameterized as follows: p2141 Threshold value p2142 Hysteresis			
11	I, M or P limit reached or exceeded	1	I, M or P limit not reached	BO: r1407.7
		0	I, M or P limit reached or exceeded	
12	Holding brake open	1	Holding brake opened	BO: r0899.12
		0	Holding brake closed	
13	No motor overtemperature alarm	1	Motor overtemperature alarm not active	BO: r2135.14
		0	Motor overtemperature alarm active	
14	n_act >= 0	1	Actual speed > = 0	BO: r2197.3
		0	Actual speed < 0	
15	Alarm, drive converter thermal overload	1	No alarm active	BO: r2135.15
		0	Alarm, converter thermal overload The overtemperature alarm for the converter is active.	

ZSW1 (status word 1, positioning mode, r0108.4 = 1)

See function diagram [2479]

*Valid for p0922 = 111 (telegram 111).

For p0922 = 110 (telegram 110): Bits 14 and 15 reserved.

Table 9- 16 Description of ZSW1 (status word 1, positioning mode)

Bit	Meaning	Remarks		Parameter
0	Ready for switching on	1	Ready for switching on Power supply on, electronics initialized, line contactor released if necessary, pulses inhibited.	BO: r0899.0
		0	Not ready for switching on	
1	Ready for operation	1	Ready for operation Voltage at Line Module (i.e. line contactor closed (if used)), field being built up.	BO: r0899.1
		0	Not ready for operation Reason: No ON command present	
2	Operation enabled	1	Operation enabled Enable electronics and pulses, then ramp up to active setpoint.	BO: r0899.2
		0	Operation inhibited	
3	Fault active	1	Fault active The drive is faulty and, therefore, out of service. The drive switches to "switching on inhibited" once the fault has been acknowledged and the cause has been remedied. The active faults are stored in the fault buffer.	BO: r2139.3
		0	No fault active No active fault in the fault buffer.	
4	Coasting down active (OFF2)	1	No OFF2 active	BO: r0899.4
		0	Coasting down active (OFF2) An OFF2 command is active.	
5	Quick stop active (OFF3)	1	No OFF3 active	BO: r0899.5
		0	Quick stop active (OFF3) An OFF3 command is active.	
6	Switching on inhibited	1	Switching on inhibited A restart is only possible by means of OFF1 and then ON.	BO: r0899.6
		0	No "switching on inhibited" Switching on is possible.	
7	Alarm active	1	Alarm active The drive is operational again. No acknowledgement necessary. The active alarms are stored in the alarm buffer.	BO: r2139.7
		0	No alarm active No active alarm in the alarm buffer.	

Bit	Meaning	Remarks		Parameter
8	Following error within the tolerance range	1	Setpoint/actual value monitoring within tolerance band Actual value within a tolerance bandwidth; The tolerance bandwidth can be parameterized.	BO: r2684.8
		0	Setpoint/actual value monitoring not within tolerance band	
9	Control request to PLC	1	Control requested The PLC is requested to assume control. Condition for applications with isochronous mode: Drive synchronized with PLC system.	BO: r0899.9
		0	Local operation Control only possible on device	
10	Target position reached	1	Target position reached	BO: r2684.10
		0	Target position not reached	
11	Reference point set	1	Reference point set	BO: r2684.11
		0	Reference point not set	
12	Acknowledgement, traversing block activated	0/1	Acknowledgement, traversing block	BO: r2684.12
		0	No effect	
13	Drive at standstill	1	Drive at standstill	BO: r2199.0
		0	Drive not at standstill	
14*	Axis accelerating (telegram 111)	1	Axis is accelerating.	BO: r2684.4
		0	Axis is not accelerating.	
15*	Axis decelerating (telegram 111)	1	Axis is decelerating.	BO: r2684.5
		0	Axis is not decelerating.	

ZSW2 (status word 2)

See function diagram [2454]

Table 9- 17 Description of ZSW2 (status word 2)

Bit	Meaning	Remarks		Parameter
0	DDS eff., bit 0	–	Drive data set effective (2-bit counter)	BO: r0051.0
1	DDS eff., bit 1	–		BO: r0051.1
2...4	Reserved	–	–	–
5	Alarm class bit 0	–	Bits 5-6: Alarm stage of SINAMICS drives, transferred as attribute in alarm message value = 0: Alarm (previous alarm stage) value = 1: Alarm class A value = 2: Alarm class B value = 3: Alarm class C	BO: r2139.11
6	Alarm class bit 1	–		BO: r2139.12
7	Parking axis	1	Axis parking active	BO: r0896.0
		0	Axis parking not active	
8	Travel to fixed stop	1	Travel to fixed stop	BO: r1406.8
		0	No travel to fixed stop	
9	Reserved	–	–	–
10	Pulses enabled	1	Pulses enabled	BO: r0899.11
		0	Pulses not enabled	
11	Data set changeover	1	Data record changeover active	BO: r0835.0
		0	No data set changeover active	
12	Slave sign-of-life bit 0	–	User data integrity (4-bit counter)	Implicitly interconnected
13	Slave sign-of-life bit 1	–		
14	Slave sign-of-life bit 2	–		
15	Slave sign-of-life bit 3	–		

NACT_A (Speed setpoint A (16 bit))

- Actual speed value with 16-bit resolution.
- The speed actual value is normalized in the same way as the setpoint (see NSOLL_A).

NACT_B (Speed setpoint B (32 bit))

- Actual speed value with 32-bit resolution.
- The speed actual value is normalized in the same way as the setpoint (see NSOLL_B).

Gn_ZSW (encoder n status word)
Gn_XIST1 (encoder n position actual value 1)
Gn_XIST2 (encoder n position actual value 2)

This process data belongs to the encoder interface.

E_DIGITAL
MT_ZSW
MTn_ZS_F/MTn_ZS_S
CU_ZSW1

These process data are part of the central process data.

MELDW (message word)

See function diagram [2456]

Table 9- 18 Description of MELDW (message word)

Bit	Meaning	Remarks		Parameter
0	Ramp-up/ramp-down completed/ramp-function generator active	1	Ramp-up/ramp-down completed. • The ramp-up procedure is completed once the speed setpoint has been changed.	BO: r2199.5
		1/0	Ramp-up starts. The start of the ramp-up procedure is detected as follows: • The speed setpoint changes, and • The defined tolerance bandwidth (p2164) is exited.	
		0	Ramp-function generator active • The ramp-up procedure is still active once the speed setpoint has been changed.	
		0/1	Ramp-up ends. The end of the ramp-up procedure is detected as follows: • The speed setpoint is constant, and • The actual speed value is within the tolerance bandwidth and has reached the speed setpoint, and • The delay time (p2166) has elapsed.	
1	Torque utilization < p2194	1	Torque utilization < p2194 • The current torque utilization is less than the set torque utilization threshold (p2194), or • Ramp-up is not yet complete.	BO: r2199.11
		0	Torque utilization > p2194 • The current torque utilization is greater than the set torque utilization threshold (p2194).	

Bit	Meaning	Remarks		Parameter
	Application: This message indicates that the motor is overloaded and appropriate measures need to be taken to rectify the situation (e.g. stop the motor or reduce the load).			
2	|n_act| < p2161	1	|n_act| < p2161 The actual speed value is less than the set threshold value (p2161).	BO: r2199.0
		0	|n_act| ≥ p2161 The actual speed value is greater than or the same as the set threshold value (p2161).	
	Note: The message is parameterized as follows: p2161 Threshold value p2150 Hysteresis **Application:** To protect the mechanics, the gear stages are not switched mechanically until the speed is less than the set threshold value.			
3	|n_act| ≤ p2155	1	|n_act| ≤ p2155 The actual speed value is less than or the same as the set threshold value (p2155).	BO: r2197.1
		0	|n_act| > p2155 The actual speed value is greater than the set threshold value (p2155).	
	Note: The message is parameterized as follows: p2155 Threshold value p2140 Hysteresis **Application:** Speed monitoring.			
4	Reserved	–	–	–
5	Variable signaling function	1	The monitored signal of a SERVO axis has exceeded the specified threshold value.	BO: r3294
		0	The monitored signal of a SERVO axis is within the specified threshold value or the signaling function is not active	
6	No motor overtemperature alarm	1	No motor overtemperature alarm The temperature of the motor is within the permissible range.	BO: r2135.14
		0	Alarm, motor overtemperature The temperature of the motor is greater than the set motor temperature threshold (p0604).	
	Note: • When the motor temperature threshold is exceeded, only an alarm is output initially to warn you of this. The alarm is canceled automatically when the temperature no longer exceeds the alarm threshold. • If the overtemperature is present for longer than the value set via p0606, a fault is output to warn you of this. • Motor temperature monitoring can be switched out via p0600 = 0. **Application:** The user can respond to this message by reducing the load. thereby preventing the motor from shutting down with the "Motor temperature exceeded" fault after the set time has elapsed.			

Bit	Meaning	Remarks		Parameter
7	No thermal overload in power unit alarm	1	No thermal overload in power unit alarm The temperature of the heat sink in the power unit is within the permissible range.	BO: r2135.15
		0	Thermal overload in power unit alarm The temperature of the heat sink in the power unit is outside the permissible range. If the overtemperature remains, the drive switches itself off after approx. 20 s.	
8	Speed setp - act val deviation in tolerance t_on	1	The speed setpoint/actual value is **within** the tolerance p2163: The signal is switched on after the delay specified in p2167 has elapsed.	BO: r2199.4
		0	The speed setpoint/actual value is **outside** the tolerance.	
9,10	Reserved	-	-	-
11	Controller enable	1	Controller enable	BO: r0899.8
12	Drive ready	1	Drive ready	BO: r0899.7
13	Pulses enabled	1	Pulses enabled The pulses for activating the motor are enabled.	BO: r0899.11
		0	Pulses inhibited	
	Application: Armature short-circuit protection must only be switched on when the pulses are inhibited. This signal can be evaluated as one of many conditions when armature short-circuit protection is activated.			
14,15	Reserved	-	-	-

AKTSATZ

See function diagram [3650].

Table 9- 19 Description of AKTSATZ (active traversing block/MDI active)

Bit	Meaning	Remarks		Parameter
0	Active traversing block, bit 0	–	Active traversing block (6-bit counter)	BO: r2670.0
1	Active traversing block, bit 1	–		BO: r2670.1
2	Active traversing block, bit 2	–		BO: r2670.2
3	Active traversing block, bit 3	–		BO: r2670.3
4	Active traversing block, bit 4	–		BO: r2670.4
5	Active traversing block, bit 5	–		BO: r2670.5
6 ... 14	Reserved	–	–	–
15	MDI active	1	MDI active	BO: r2670.15
		0	MDI not active	

POS_ZSW

See function diagram [3645].

Table 9- 20 Description of POS_ZSW (status word, positioning mode)

Bit	Meaning	Remarks		Parameter
0	Tracking mode active	1	Tracking mode active	BO: r2683.0
		0	Tracking mode not active	
1	Velocity limiting active	1	Active	BO: r2683.1
		0	Not active	
2	Setpoint static	1	Setpoint static	BO: r2683.2
		0	Setpoint not static	
3	Position setpoint reached	1	Position setpoint reached	BO: r2683.3
		0	Position setpoint not reached	
4	Axis moves forwards	1	Axis moves forwards	BO: r2683.4
		0	Axis stationary or moves backwards	
5	Axis moves backwards	1	Axis moves backwards	BO: r2683.5
		0	Axis stationary or moves forwards	
6	Minus software limit switch actuated	1	Minus SW limit switch actuated	BO: r2683.6
		0	Minus SW limit switch not actuated	
7	Plus software limit switch actuated	1	Plus SW limit switch actuated	BO: r2683.7
		0	Plus SW limit switch not actuated	
8	Position actual value ⇐ cam switching position 1	1	Position actual value ⇐ cam switching position 1	BO: r2683.8
		0	Cam switching position 1 passed	
9	Position actual value ⇐ cam switching position 2	1	Position actual value ⇐ cam switching position 2	BO: r2683.9
		0	Cam switching position 2 passed	
10	Direct output 1 via the traversing block	1	Direct output 1 active	BO: r2683.10
		0	Direct output 1 not active	
11	Direct output 2 via the traversing block	1	Direct output 1 active	BO: r2683.11
		0	Direct output 1 not active	
12	Fixed stop reached	1	Fixed stop reached	BO: r2683.12
		0	Fixed stop is not reached	
13	Fixed stop clamping torque reached	1	Fixed stop clamping torque reached	BO: r2683.13
		0	Fixed stop clamping torque is not reached	
14	Travel to fixed stop active	1	Travel to fixed stop active	BO: r2683.14
		0	Travel to fixed stop not active	
15	Reserved	–	–	–

POS_ZSW1 (status word 1, positioning mode, r0108.4 = 1)

See function diagram [2466].

Table 9- 21 Description of POS_ZSW1 (status word 1, positioning mode, r0108.4 = 1)

Bit	Meaning	Remarks		Parameter
0	Active traversing block, bit 0	–	Active traversing block (6-bit counter)	BO: r2670.0
1	Active traversing block, bit 1	–		BO: r2670.1
2	Active traversing block, bit 2	–		BO: r2670.2
3	Active traversing block, bit 3	–		BO: r2670.3
4	Active traversing block, bit 4	–		BO: r2670.4
5	Active traversing block, bit 5	–		BO: r2670.5
6	Reserved	–	–	–
7	Reserved	–	–	–
8	STOP cam minus active	1	–	BO: r2684.13
9	STOP cam plus active	1	–	BO: r2684.14
10	Jog active	1	Jog active	BO: r2094.0 BO: r2669.0
		0	Jog not active	
11	Reference point approach active	1	Reference point approach active	BO: r2094.1 BO: r2669.1
		0	Reference point approach not active	
12	Flying referencing	1	Flying referencing	BO: r2684.1
		0	Flying referencing not active	
13	Traversing blocks active	1	Traversing blocks active	BO: r2094.2 BO: r2669.2
		0	Traversing blocks not active	
14	Set-up active	1	Set-up active	BO: r2094.3 BO: r2669.4
		0	Set-up not active	
15	MDI active	1	MDI active	BO: r2670.15
		0	MDI not active	

XIST_A

Actual position value is displayed

Normalization: 1 corresponds to 1 LU

S_ZSW1B

Safety Info Channel: Status word

Table 9- 22 Description S_ZSW1B

Bit	Meaning	Remarks		Parameter
0	STO active	1	STO active	r9734.0
		0	STO not active	
1	SS1 active	1	SS1 active	r9734.1
		0	SS1 not active	
2	SS2 active	1	SS2 active	r9734.2
		0	SS2 not active	
3	SOS active	1	SOS active	r9734.3
		0	SOS not active	
4	SLS active	1	SLS active	r9734.4
		0	SLS not active	
5	SOS selected	1	SOS selected	r9734.5
		0	SOS deactivated	
6	SLS selected	1	SLS selected	r9734.6
		0	SLS not selected	
7	Internal event	1	Internal event	r9734.7
		0	No internal event	
8…11	Reserved	–	–	–
12	SDI positive selected	1	SDI positive selected	r9734.12
		0	SDI positive not selected	
13	SDI negative selected	1	SDI negative selected	r9734.13
		0	SDI negative not selected	
14	Emergency retraction requested	1	Emergency retraction requested	r9734.14
		0	Emergency retraction not requested	
15	Safety message effective	1	Safety message effective	r9734.15
		0	No Safety message effective	

S_V_LIMIT_B

SLS speed limit with a 32-bit resolution with sign bit.

- The SLS speed limit is available in r9733[2].
- Bit 31 determines the sign of the value:
  - Bit = 0 → positive value
  - Bit = 1 → negative value
- The SLS speed limit is standardized via p2000.

  S_V_LIMIT_B = 4000 0000 hex ≙ speed in p2000

WARN_CODE

Display of the alarm code (see function diagram 8065).

FAULT_CODE

Display of the fault code (see function diagram 8060).

POS_ZSW2 (status word 2, positioning mode, r0108.4 = 1)

See function diagram [2467].

Table 9- 23 Description of POS_ZSW2 (status word 2, positioning mode, r0108.4 = 1)

Bit	Meaning	Remarks		Parameter
0	Tracking mode active	1	Tracking mode active	BO: r2683.0
		0	Tracking mode not active	
1	Velocity limiting active	1	Active	BO: r2683.1
		0	Not active	
2	Setpoint static	1	Setpoint static	BO: r2683.2
		0	Setpoint not static	
3	Print index outside outer window	1	Flying / passive referencing not active	BO: r2684.3
		0	Flying / passive referencing active	
4	Axis moves forwards	1	Axis moves forwards	BO: r2683.4
		0	Axis stationary or moves backwards	
5	Axis moves backwards	1	Axis moves backwards	BO: r2683.5
		0	Axis stationary or moves forwards	
6	Minus software limit switch actuated	1	Minus SW limit switch actuated	BO: r2683.6
		0	Minus SW limit switch not actuated	
7	Plus software limit switch actuated	1	Plus SW limit switch actuated	BO: r2683.7
		0	Plus SW limit switch not actuated	
8	Position actual value ⇐ cam switching position 1	1	Position actual value ⇐ cam switching position 1	BO: r2683.8
		0	Cam switching position 1 passed	
9	Position actual value ⇐ cam switching position 2	1	Position actual value ⇐ cam switching position 2	BO: r2683.9
		0	Cam switching position 2 passed	
10	Direct output 1 via the traversing block	1	Direct output 1 active	BO: r2683.10
		0	Direct output 1 not active	
11	Direct output 2 via the traversing block	1	Direct output 1 active	BO: r2683.11
		0	Direct output 1 not active	
12	Fixed stop reached	1	Fixed stop reached	BO: r2683.12
		0	Fixed stop is not reached	
13	Fixed stop clamping torque reached	1	Fixed stop clamping torque reached	BO: r2683.13
		0	Fixed stop clamping torque is not reached	
14	Travel to fixed stop active	1	Travel to fixed stop active	BO: r2683.14
		0	Travel to fixed stop not active	
15	Traversing command active	1	Axis traversing	BO: r2684.15
		0	Axis stationary	

9.2.3.4 Control and status words for encoder

Description

The process data for the encoders is available in various telegrams. For example, telegram 3 is provided for speed control with 1 position encoder and transmits the process data of encoder 1.

The following process data is available for the encoders:

- Gn_STW encoder n control word (n = 1, 2)
- Gn_ZSW encoder n status word
- Gn_XIST1 encoder n act. pos. value 1
- Gn_XIST2 encoder n act. pos. value 2

Note

Encoder 1: Motor encoder

Encoder 2: Direct measuring system

Example of encoder interface

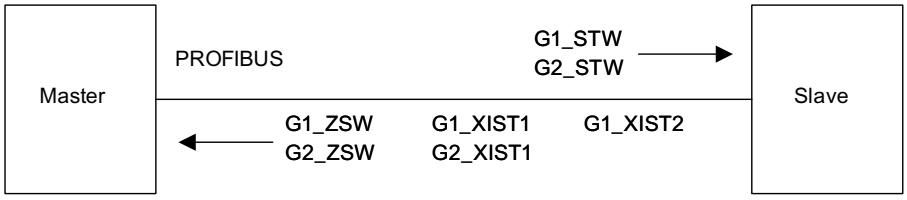

Figure 9-8 Example of encoder interface (encoder-1: two actual values, encoder -2: one actual value)

Encoder n control word (Gn_STW, n = 1, 2)

The encoder control word controls the encoder functions.

Table 9- 24 Description of the individual signals in Gn_STW

Bit	Name		Signal status, description		
0 1 2 3	Find reference mark or flying measurement	Functions	If bit 7 = 0, then find reference mark request applies:		
			Bit	Meaning	
			0	Function 1	Reference mark 1
			1	Function 2	Reference mark 2
			2	Function 3	Reference mark 3
			3	Function 4	Reference mark 4
			If bit 7 = 1, then find flying measurement request applies:		
			0	Function 1	Probe 1 rising edge
			1	Function 2	Probe 2 falling edge
			2	Function 3	Probe 3 rising edge
			3	Function 4	Probe 4 falling edge
			Note:		
			• Bit x = 1 Bit x = 0		Request function Do not request function
			• The following applies if more than 1 function is activated: The values for all functions cannot be read until each activated function has terminated and this has been confirmed in the corresponding status bit (ZSW.0/.1/.2/.3 "0" signal again). • Find reference mark It is possible to search for a reference mark. • Equivalent zero mark Flying measurement Positive and negative edge can be activated simultaneously.		
4 5 6		Command	Bit 6, 5, 4		Meaning
			000		–
			001		Activate function x
			010		Read value x
			011		Terminate function
			(x: function selected via bit 0-3)		
7		Mode	1	Flying measurement (fine resolution via p0418)	
			0	Find reference mark (fine resolution via p0418)	
8...12	Reserved		–		
13	Request cyclic absolute value		1	Request cyclic transmission of the absolute position actual value in Gn_XIST2. Used for (e.g.): • Additional measuring system monitoring • Synchronization during ramp-up	
			0	No request	

Bit	Name	Signal status, description	
14	Parking encoder	1	Request parking encoder (handshake with Gn_ZSW bit 14)
		0	No request
15	Acknowledge encoder error	0/1	Request to reset encoder errors
			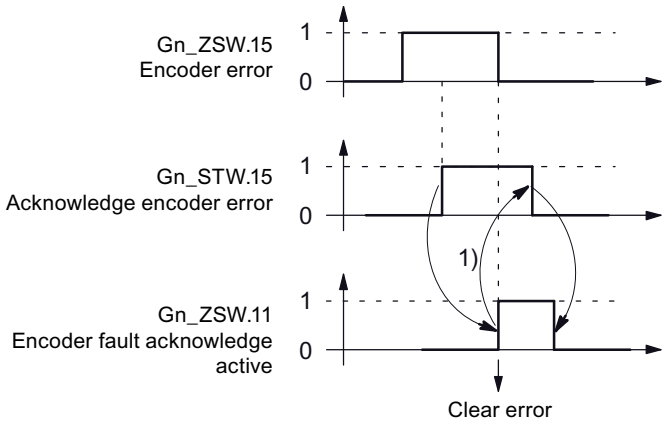 1) Signal must be reset by user.
		0	No request

Example 1: Find reference mark

Assumptions for the example:

- Distance-coded reference mark
- Two reference marks (function 1/function 2)
- Position control with encoder 1

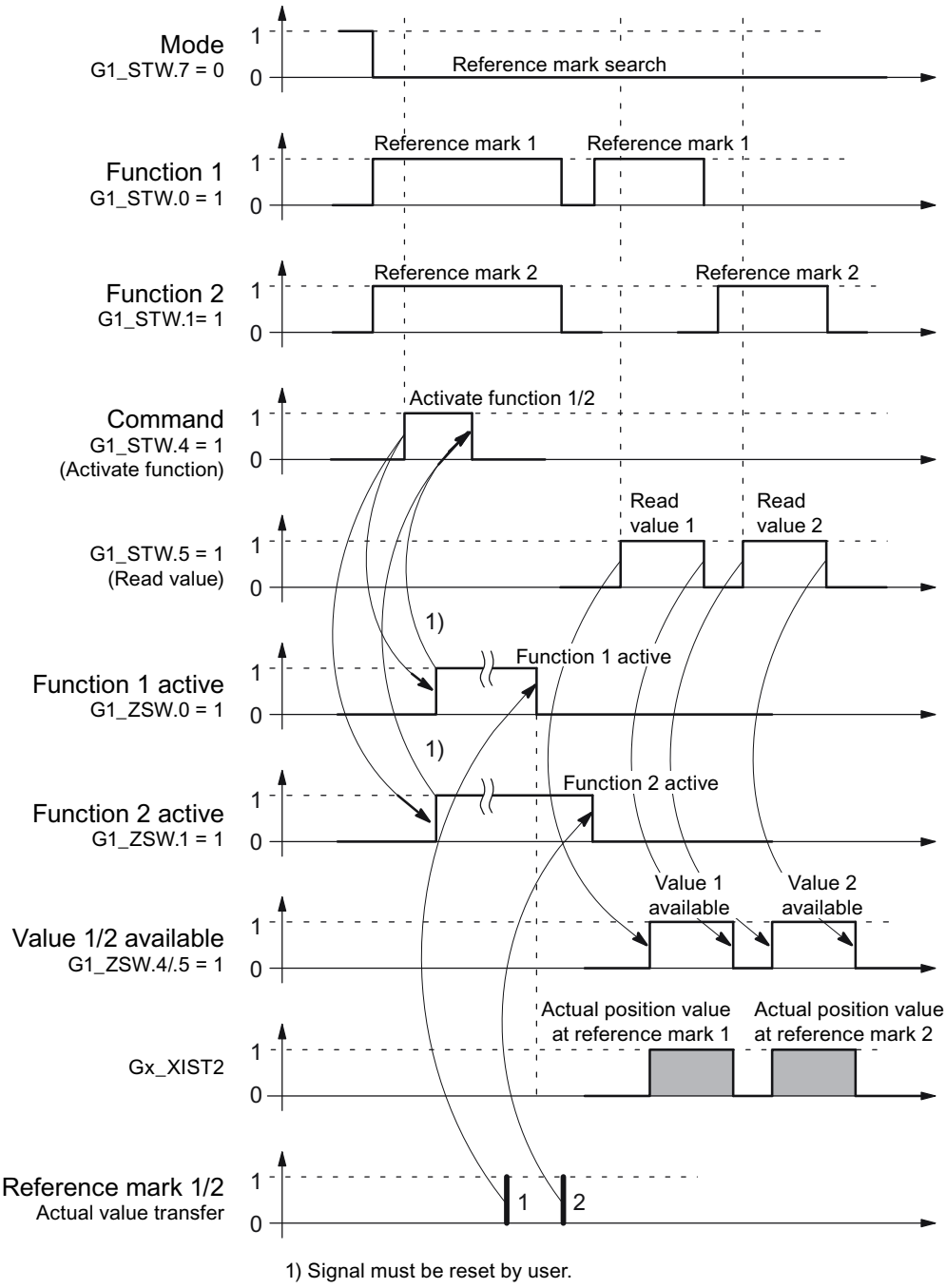

1) Signal must be reset by user.

Figure 9-9 Sequence chart for "Find reference mark"

Example 2: Flying measurement

Assumptions for the example:

- Measuring probe with rising edge (function 1)
- Position control with encoder 1

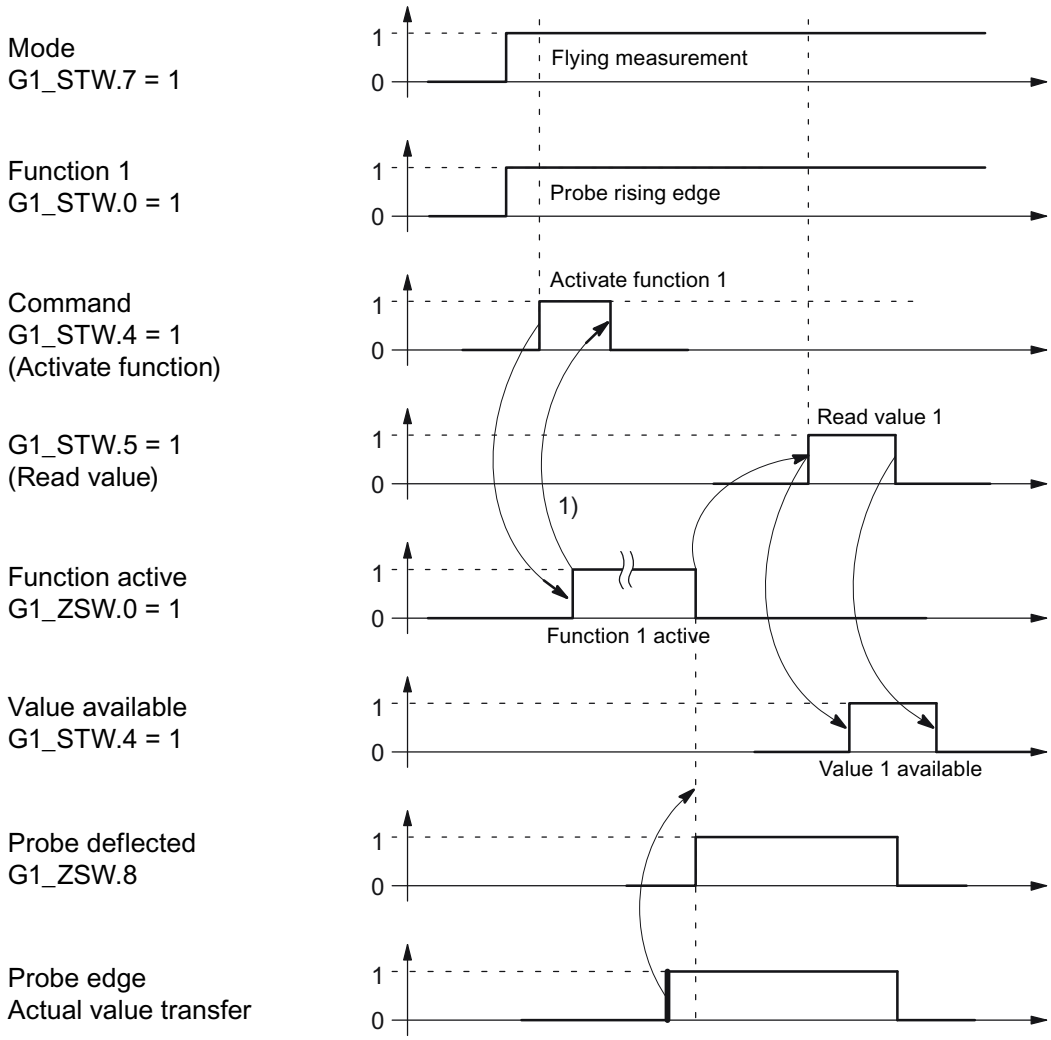

Figure 9-10 Sequence chart for "Flying measurement"

Encoder 2 control word (G2_STW)

- see G1_STW

Encoder n status word (Gn_ZSW, n = 1, 2)

The encoder status word is used to display states, errors and acknowledgements.

Table 9- 25 Description of the individual signals in Gn_ZSW

Bit	Name		Signal status, description		
0 1 2 3	"Find reference mark" or "Flying measurement "	Status: Function 1 - 4 active	Valid for "Find reference mark" and "Flying measurement"		
			Bit	Meaning	
			0	Function 1	Reference mark 1 Probe 1 rising edge
			1	Function 2	Reference mark 2 Probe 1 falling edge
			2	Function 3	Reference mark 3 Probe 2 rising edge
			3	Function 4	Reference mark 4 Probe 2 falling edge
			Note: • Bit x = 1 function active Bit x = 0 function inactive		
4 5 6 7		Status: Value 1 - 4 available	Valid for "Find reference mark" and "Flying measurement"		
			Bit	Meaning	
			4	Value 1	Reference mark 1 Probe 1 rising edge
			5	Value 2	Probe 1 falling edge
			6	Value 3	Probe 2 rising edge
			7	Value 4	Probe 2 falling edge
			Note: • Bit x = 1 value available Bit x = 0 value not available • Only one value can be fetched at a time. Reason: There is only one common status word Gn_XIST2 to read the values. • The probe must be configured to a "high-speed input" DI/DO on the Control Unit.		
8		Probe 1 deflected	1	Probe deflected (high signal)	
			0	Probe not deflected (low signal)	
9	Probe 2 deflected		1	Probe deflected (high signal)	
			0	Probe not deflected (low signal)	
10	Reserved		-		
11	Encoder fault acknowledge active		1	Encoder fault acknowledge active **Note:** See under STW.15 (acknowledge encoder error)	
			0	No acknowledgement active	

Bit	Name	Signal status, description	
12	Reserved	-	
13	Transmit absolute value cyclically	1	Acknowledgement for Gn_STW.13 (request absolute value cyclically) **Note:** Cyclic transmission of the absolute value can be interrupted by a function with higher priority. • See Gn_XIST2
		0	No acknowledgement
14	Parking encoder	1	Parking encoder active (i.e. parking encoder switched off)
		0	No active parking encoder
15	Encoder error	1	Error from encoder or actual-value sensing is active. **Note:** The error code is stored in Gn_XIST2.
		0	No error is active.

Encoder 1 actual position value 1 (G1_XIST1)

- Resolution: Encoder lines • 2n

  n: fine resolution, no. of bits for internal multiplication

  The fine resolution is specified via p0418.
- Used to transmit the cyclic actual position value to the controller.
- The transmitted value is a relative, free-running actual value.
- Any overflows must be evaluated by the master controller.

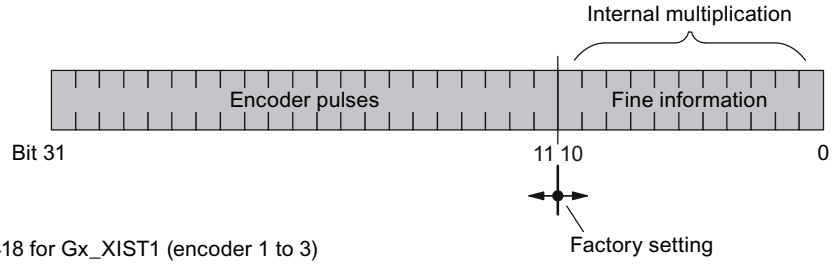

Figure 9-11 Subdivision and settings for Gx_XIST1

- Encoder lines of incremental encoder
  – For encoders with sin/cos 1Vpp:

    Encoder lines = no. of sinusoidal signal periods
- After power-up: Gx_XIST1 = 0
- An overflow in Gx_XIST1 must be viewed by the master controller.
- There is no modulo interpretation of Gx_XIST1 in the drive.

Encoder 1 actual position value 2 (G1_XIST2)

Different values are entered in Gx_XIST2 depending on the function.

- Priorities for Gx_XIST2

The following priorities should be considered for values in Gx_XIST2:

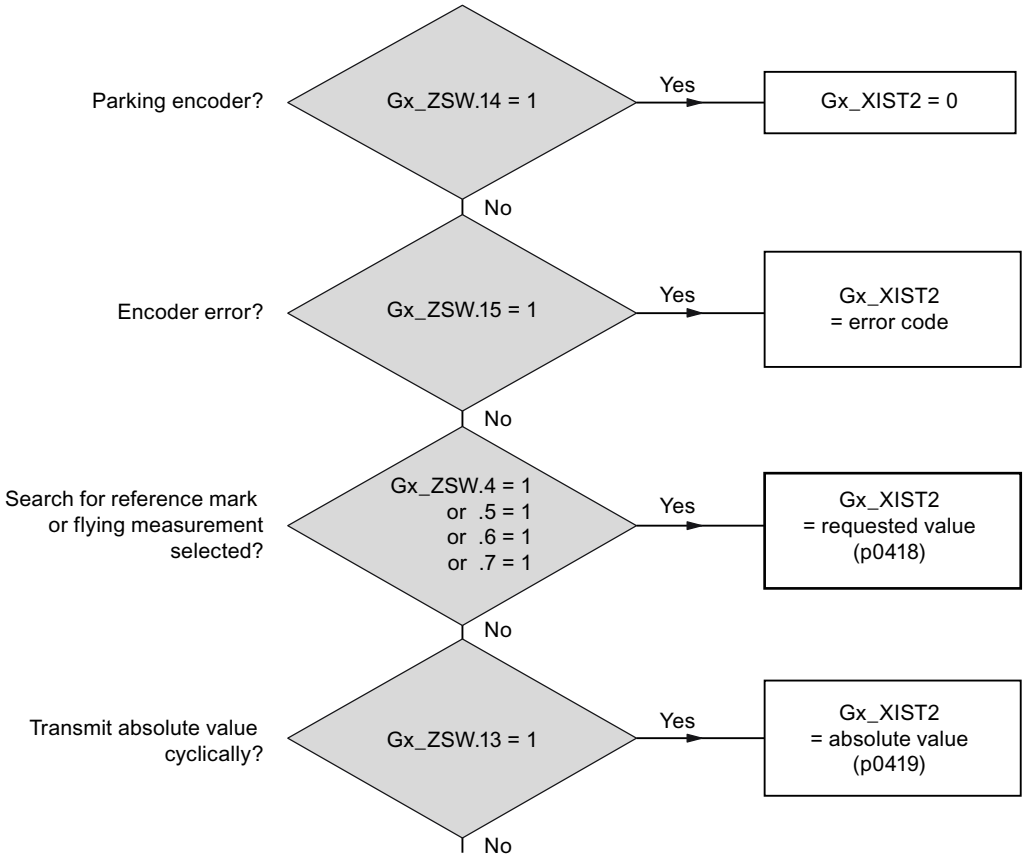

Figure 9-12 Priorities for functions and Gx_XIST2

- Resolution: Encoder pulses • 2n

  n: fine resolution, no. of bits for internal multiplication

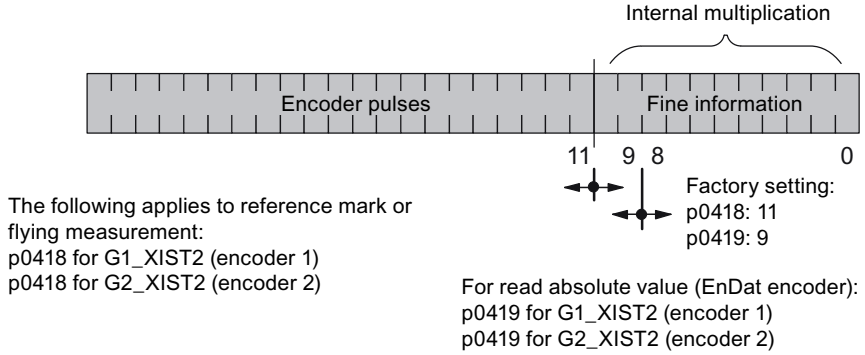

Figure 9-13 Subdivision and settings for Gx_XIST2

- Encoder lines of incremental encoder
  - For encoders with sin/cos 1Vpp:

    Encoder lines = no. of sinusoidal signal periods

Error code in Gn_XIST2

Table 9- 26 Error code in Gn_XIST2

n_XIST2	Meaning	Possible causes / description
1	Encoder error	One or more existing encoder faults. Detailed information in accordance with drive messages.
2	Zero marker monitoring	–
3	Abort parking sensor	• Parking drive object already selected.
4	Abort find reference mark	• A fault exists (Gn_ZSW.15 = 1) • Encoder has no zero marker (reference mark) • reference mark 2, 3 or 4 is requested • Switchover to "Flying measurement" during search for reference mark • Command "Read value x" set during search for reference mark • Inconsistent position measured value with distance-coded reference marks.
5	Abort, retrieve reference value	• More than four values requested • No value requested • Requested value not available
6	Abort flying measurement	• No probe configured p0488, p0489 • Switch over to "reference mark search" during flying measurement • Command "Read value x" set during flying measurement
7	Abort get measured value	• More than one value requested • No value requested. • Requested value not available • Parking encoder active • Parking drive object active
8	Abort absolute value transmission on	• Absolute encoder not available • Alarm bit absolute value protocol set
3841	Function not supported	–

Encoder 2 status word (G2_ZSW)

- See G1_ZSW (table 4-20)

Encoder 2 actual position value 1 (G2_XIST1)

- See G1_XIST1

Encoder 2 actual position value 2 (G2_XIST2)

- See G1_XIST2

Function diagrams (see SINAMICS S110 List Manual)

- 4720 Encoder interface, receive signals, encoders n
- 4730 Encoder interface, send signals, encoders n
- 4735 Find reference mark with equivalent zero mark, encoders n
- 4740 Measuring probe evaluation, measured value memory, encoders n

Overview of important parameters (see SINAMICS S110 List Manual)

Adjustable parameter drive, CU_S parameter is marked

- p0418[0...15] Fine resolution Gx_XIST1
- p0419[0...15] Fine resolution Gx_XIST2
- p0480[0...2] CI: Signal source for encoder control word Gn_STW
- p0488[0...2] Measuring probe 1 input terminal
- p0489[0...2] Measuring probe 2 input terminal
- p0490 Invert measuring probe (CU_S)

Display parameters drive

- r0481[0...2] CO: Encoder status word Gn_ZSW
- r0482[0...2] CO: Encoder position actual value Gn_XIST1
- r0483[0...2] CO: Encoder position actual value Gn_XIST2
- r0487[0...2] CO: Diagnostic encoder control word Gn_STW

9.2.3.5 Central control and status words

The central process data exists for different telegrams. For example, telegram 391 is used for transferring measuring times and digital inputs/outputs.

The following central process data are available:

Receive signals:

- CU_STW1 Control Unit control word
- A_DIGITAL digital outputs
- MT_STW probe control word

Transmit signals:

- CU_ZSW1 Control Unit status word
- E_DIGITAL digital inputs
- MT_ZSW Probe status word
- MTn_ZS_F Probe n measuring time, falling edge (n = 1, 2)
- MTn_ZS_S Probe n measuring time, rising edge (n = 1, 2)

CU_STW1 (control word for Control Unit, CU)

See function diagram [2495].

Table 9- 27 Description of CU_STW1 (control word for Control Unit)

Bit	Meaning	Remarks		Parameter
0	Synchronization flag	–	This signal is used to synchronize the joint system time between the controller and drive unit.	BI: p0681[0]
1	RTC PING	–	This signal is used to set the UTC time using the PING event.	BI: p3104
2...6	Reserved	–	–	–
7	Acknowledging faults	0/1	Acknowledging faults	BI: p2103
8...9	Reserved	–	–	–
10	Control taken over	0	External controller has no control via the CU Once the prevailing faults on all DOs have been acknowledged, the fault is also acknowledged implicitly on DO1 (CU).	p3116
		1	External controller has control via the CU The prevailing faults have to be acknowledged on all DOs and also explicitly on DO1 (CU).	
11	Reserved	–	–	–
12	Controller sign-of-life bit 0	–	Controller sign-of-life	CI: p2045
13	Controller sign-of-life bit 1	–		
14	Controller sign-of-life bit 2	–		
15	Controller sign-of-life bit 3	–		

A_DIGITAL (digital outputs)

This process data can be used to control the Control Unit outputs.
See function diagram [2497]

Table 9- 28 Description of A_DIGITAL (digital outputs)

Bit	Meaning	Remarks		Parameter
0	Digital input/output 8 (DI/DO 8)	–	DI/DO 8 on the Control Unit must be parameterized as an output (p0728.8 = 1).	BI: p0738
1	Digital input/output 9 (DI/DO 9)	–	DI/DO 9 on the Control Unit must be parameterized as an output (p0728.9 = 1).	BI: p0739
2	Digital input/output 10 (DI/DO 10)	–	DI/DO 10 on the Control Unit must be parameterized as an output (p0728.10 = 1).	BI: p0740
3	Digital input/output 11 (DI/DO 11)	–	DI/DO 11 on the Control Unit must be parameterized as an output (p0728.11 = 1).	BI: p0741
4...15	Reserved	–	–	–
Note: The bidirectional digital inputs/outputs (DI/DO) can be connected as either an input or an output (see also transmit signal E_DIGITAL).				

MT_STW

Control word for the "central probe" function. Display via r0685.

Table 9- 29 Description of MT_STW (control word for Control Unit)

Bit	Meaning	Remarks		Parameter
0	Falling edge probe 1	–	Activation of measuring time determination with the next falling edge	CI: p0682
1	Falling edge probe 2	–		
2	Falling edge probe 3	–		
3	Falling edge probe 4	–		
4	Falling edge probe 5	–		
5	Falling edge probe 6	–		
6...7	Reserved	–	–	
8	Rising edge probe 1	–	Activation of measuring time determination with the next rising edge	
9	Rising edge probe 2	–		
10	Rising edge probe 3	–		
11	Rising edge probe 4	–		
12	Rising edge probe 5	–		
13	Rising edge probe 6	–		
14...15	Reserved	–	–	

CU_ZSW1 (status word of the DO1 telegram (telegrams 39x))

See function diagram [2496].

Table 9- 30 Description of CU_ZSW1 (status word of the CU)

Bit	Meaning	Remarks		Parameter
0...3	Reserved	–	–	–
3	Fault active	1	Fault active. The active faults are stored in the fault buffer.	BO: r2139.3
		0	No fault active. There is no active fault in the fault buffer.	
4...5	Reserved	–	–	–
6	Reserved	0	–	–
7	Alarm active	1	Alarm active. The active alarms are stored in the alarm buffer.	BO: 2139.7
		0	No alarm active. No active alarm is present in the alarm buffer.	
8	Synchronization (SYNC)	–	–	–
9	Alarm pending	1	No group bit for module line-up alarm.	BO: r3114.9
		0	Group bit for alarm is active, ORed across all DOs including the CU of the module line-up.	
10	Fault pending	1	No group bit for module line-up fault.	BO: r3114.10
		0	Group bit for fault is active, ORed across all DOs including the CU of the module line-up, plus propagations.	
11	Safety signal pending	1	No safety signal pending	BO: r3114.11
		0	Safety signal pending	
12	Slave sign-of-life bit 0	1-15	Cyclic advance	Implicitly interconnected
		0	Initialization, no sign of life available	
13	Slave sign-of-life bit 1	1-15		
		0		
14	Slave sign-of-life bit 2	1-15		
		0		
15	Slave sign-of-life bit 3	1-15		
		0		

E_DIGITAL (digital inputs)

See function diagram [2498].

Table 9- 31 Description of E_DIGITAL (digital inputs)

Bit	Meaning	Remarks		Parameter
0	Digital input/output 8 (DI/DO = 8)	–	DI/DO 8 on the Control Unit must be parameterized as an input (p0728.8 = 0).	BO: p0722.8
1	Digital input/output 9 (DI/DO = 9)	–	DI/DO 9 on the Control Unit must be parameterized as an input (p0728.9 = 0).	BO: p0722.9
2	Digital input/output 10 (DI/DO = 10)	–	DI/DO 10 on the Control Unit must be parameterized as an input (p0728.10 = 0).	BO: p0722.10
3	Digital input/output 11 (DI/DO = 11)	–	DI/DO 11 on the Control Unit must be parameterized as an input (p0728.11 = 0).	BO: p0722.11
4...7	Reserved	–	–	–
8	Digital input 0 (DI 0)	–	Digital input DI 0 on the Control Unit	BO: r0722.0
9	Digital input 1 (DI 1)	–	Digital input DI 1 on the Control Unit	BO: r0722.1
10	Digital input 2 (DI 2)	–	Digital input DI 2 on the Control Unit	BO: r0722.2
11	Digital input 3 (DI 3)	–	Digital input DI 3 on the Control Unit	BO: r0722.3
12...15	Reserved	–	–	–
Note: The bidirectional digital inputs/outputs (DI/DO) can be connected as either an input or an output (see also receive signal A_DIGITAL).				

MT_ZSW

Status word for the "central probe" function.

Table 9- 32 Description of MT_ZSW (status word for the "central probe" function)

Bit	Meaning	Remarks		Parameter
0	Digital input probe 1	–	Digital input display	CO: r0688
1	Digital input probe 2	–		
2	Digital input probe 3	–		
3	Digital input probe 4	–		
4	Digital input probe 5	–		
5	Digital input probe 6	–		
6...7	Reserved	–	–	
8	Sub-sampling probe 1	–	Not yet carried out.	
9	Sub-sampling probe 2	–		
10	Sub-sampling probe 3	–		
11	Sub-sampling probe 4	–		
12	Sub-sampling probe 5	–		
13	Sub-sampling probe 6	–		
14...15	Reserved	–	–	

MTn_ZS_F and MTn_ZS_S

Display of the measuring time determined

The measuring time is specified as a 16-bit value with a resolution of 0.25 µs.

Features of the central probe

- The time stamps from probes in more than one drive can be transferred simultaneously in a single telegram.
- The time in the controller and drive unit is synchronized via CU_STW1 and the CU_ZSW1.
  Note: The controller must support time synchronization!
- A higher-level controller can then use the time stamp to determine the actual position value of more than one drive.
- The system outputs a message if the measuring time determination function in the probe is already in use (see also p0488, p0489, and p0580).

Example: central probe

Assumptions for the example:

- Determination of the time stamp MT1_ZS_S by evaluating the rising edge of probe 1
- Determination of the time stamp MT2_ZS_S and MT2_ZS_F by evaluating the rising and falling edge of probe 2
- Probe 1 on DI/DO 9 of the Control Unit (p0680[0] = 1)
- Probe 2 on DI/DO 10 of the Control Unit (p0680[1] = 2)
- Manufacturer-specific telegram p0922 = 391 is set.

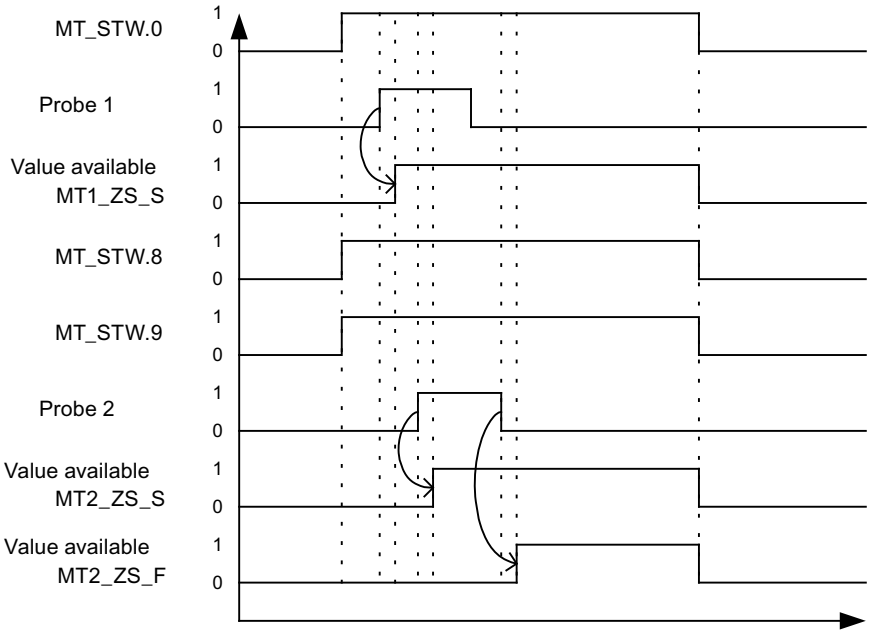

Figure 9-14 Sequence chart for central probe example

9.2.3.6 Motion Control with PROFIdrive

Description

The "Motion Control with PROFIBUS" or "Motion Control with PROFINET" function can be used to implement an isochronous drive link between a master and one or more slaves via the PROFIBUS field bus or an isochronous drive link via PROFINET.

Note

The isochronous drive link is defined in the following documentation:
Reference: /P5/ PROFIdrive Profile Drive Technology

Properties

- No additional parameters need to be entered in addition to the bus configuration in order to activate this function, the master and slave must only be preset for this function (PROFIBUS).
- The master-side default setting is made via the hardware configuration, e.g. B. HWConfig with SIMATIC S7. The slave-side default setting is made via the parameterization telegram when the bus is ramping up.
- Fixed sampling times are used for all data communication.
- The Global Control (GC) clock information on PROFIBUS is transmitted before the beginning of each cycle.
- The length of the clock cycle depends on the bus configuration. When the clock cycle is selected, the bus configuration tool (e.g. HWConfig) supports:
  - High number of drives per slave/drive unit → longer cycle
  - Large number of slaves/drive units → longer cycle
- A sign-of-life counter is used to monitor user data transfer and clock pulse failures.

Overview of closed-loop control

- Sensing of the actual position value on the slave can be performed using:
  - Indirect measuring system (motor encoder)
  - Additional direct measuring system
- The encoder interface must be configured in the process data.
- The control loop is closed via the PROFIBUS.
- The position controller is located on the master.
- The current and speed control systems and actual value sensing (encoder interface) are located on the slave.
- The position controller clock cycle is transmitted across the field bus to the slaves.

- The slaves synchronize their speed and/or current controller cycle with the position controller cycle on the master.
- The speed setpoint is specified by the master.

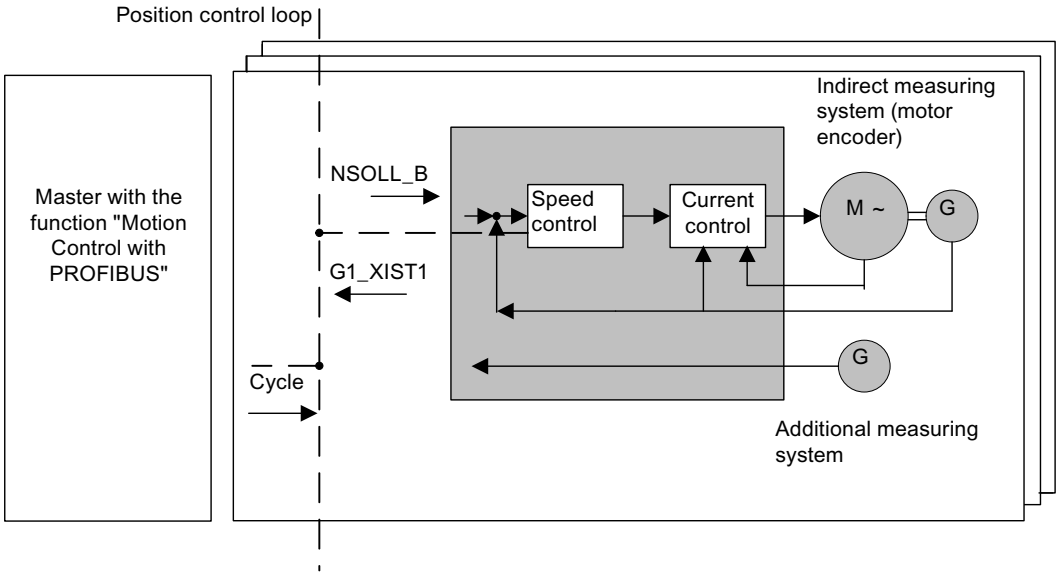

Figure 9-15 Overview of "Motion Control with PROFIBUS" (example: master and 3 slaves)

Structure of the data cycle

The data cycle comprises the following elements:

1. Global Control telegram (PROFIBUS only)
2. Cyclic part
   – Setpoints and actual values
3. Acyclic part
   – Parameters and diagnostic data
4. Reserve (PROFIBUS only)
   – Transmission of token (TTH).
   – For searching for a new node in the drive line-up (GAP)
   – Waiting time until next cycle

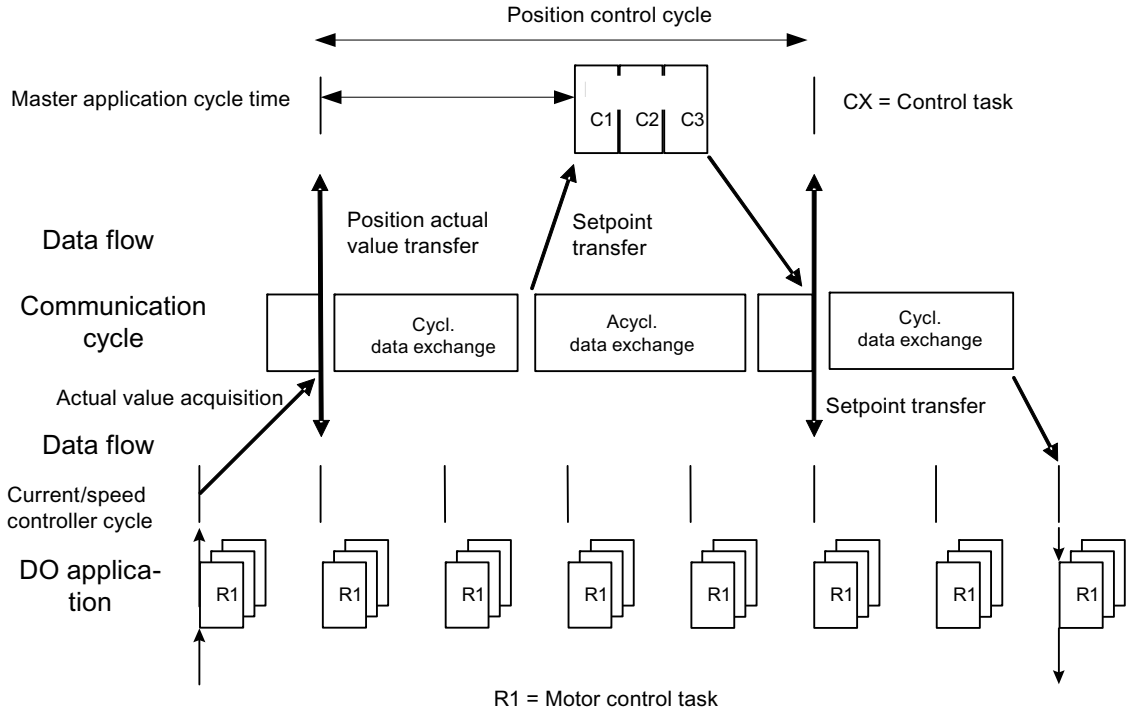

Figure 9-16 Isochronous drive link/Motion Control with PROFIdrive

9.2.4 Acyclic communication

9.2.4.1 General information about acyclic communication

Description

With acyclic communication, as opposed to cyclic communication, data transfer takes place only when an explicit request is made (e.g. in order to read and write parameters).
The read data set/write data set services are available for acyclic communication.
The following options are available for reading and writing parameters:

- S7 protocol
  This protocol uses the STARTER commissioning tool, for example, in online mode via PROFIBUS.
- PROFIdrive parameter channel with the following data set:
  - PROFIBUS: Data block 47 (0x002F)
    The DPV1 services are available for master class 1 and class 2.

Note

Please refer to the following documentation for a detailed description of acyclic communication:
Reference: PROFIdrive Profile V4.1, May 2006, Order No: 3.172

Addressing:
PROFIBUS DP, the addressing can either take the form of the logical address or the diagnostics address.

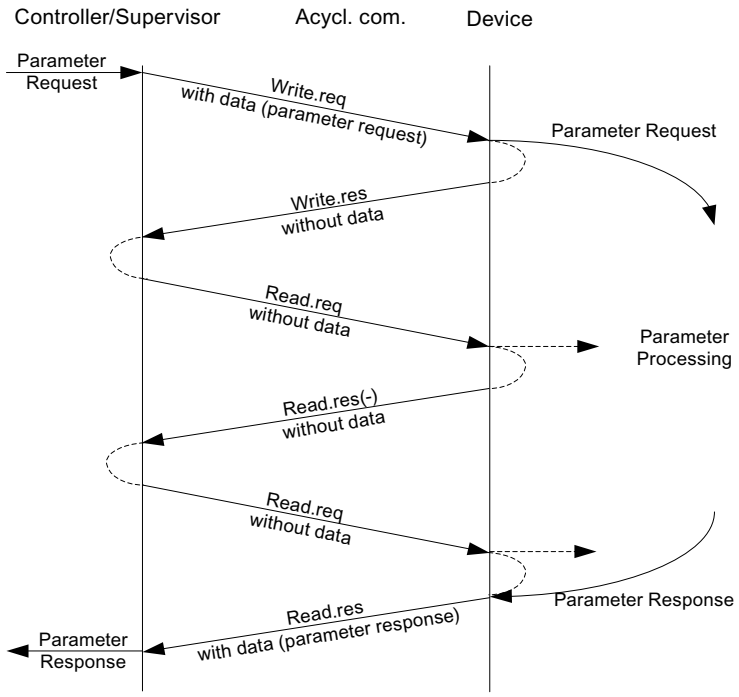

Figure 9-17 Reading and writing data

Characteristics of the parameter channel

- One 16-bit address each for parameter number and subindex.
- Concurrent access by several PROFIBUS masters (master class 2).
- Transfer of different parameters in one access (multiple parameter request).
- Transfer of complete arrays or part of an array possible.
- Only one parameter request is processed at a time (no pipelining).
- A parameter request/response must fit into a data set (max. 240 bytes).
- The task or response header are user data.

9.2.4.2 Structure of orders and responses

Structure of parameter request and parameter response

	Parameter request			Offset
Values for write access only	Job header	Request reference	Request ID	0
		Axis	No. of parameters	2
	1. parameter address	Attribute	No. of elements	4
		Parameter number		6
		Subindex		8
	...			
	nth parameter address	Attribute	No. of elements	
		Parameter number		
		Subindex		
	1. parameter value(s)	Format	No. of values	
		Values		
		...		
	...			
	nth parameter value(s)	Format	No. of values	
		Values		
		...		

	Parameter response			Offset
Values for read access only Error values for negative response only	Response header	Request reference mirrored	Response ID	0
		Axis mirrored	No. of parameters	2
	1. parameter value(s)	Format	No. of values	4
		Values or error values		6
		...		
	...			
	nth parameter value(s)	Format	No. of values	
		Values or error values		
		...		

Description of fields in DPV1 parameter request and response

Field	Data type	Values	Remark
Request reference	Unsigned8	0x01 ... 0xFF	
	Unique identification of the request/response pair for the master. The master changes the request reference with each new request. The slave mirrors the request reference in its response.		
Request ID	Unsigned8	0x01 0x02	Read request Write request
	Specifies the type of request. In the case of a write request, the changes are made in a volatile memory (RAM). A save operation is needed in order to transfer the data to the non-volatile memory (p0977).		
Response ID	Unsigned8	0x01 0x02 0x81 0x82	Read request (+) Write request (+) Read request (-) Write request (-)
	Mirrors the request identifier and specifies whether request execution was positive or negative. Negative means: Cannot execute part or all of request. The error values are transferred instead of the values for each subresponse.		
Drive object number	Unsigned8	0x00 ... 0xFF	Number
	Setting for the drive object number of a drive unit with more than one drive object. Different drive objects with separate parameter number ranges can be accessed over the same DPV1 connection.		
No. of parameters	Unsigned8	0x01 ... 0x27	No. 1 ... 39 Limited by DPV1 telegram length
	Defines the number of adjoining areas for the parameter address and/or parameter value for multi-parameter requests. The number of parameters = 1 for single requests.		
Attribute	Unsigned8	0x10 0x20 0x30	Value Description Text (not implemented)
	Type of parameter element accessed.		

Field	Data type	Values	Remark
No. of elements	Unsigned8	0x00 0x01 ... 0x75	Special function No. 1 ... 117 Limited by DPV1 telegram length
	Number of array elements accessed.		
Parameter number	Unsigned16	0x0001 ... 0xFFFF	No. 1 ... 65535
	Addresses the parameter accessed.		
Subindex	Unsigned16	0x0000 ... 0xFFFF	No. 0 ... 65535
	Addresses the first array element of the parameter to be accessed.		
Format	Unsigned8	0x02 0x03 0x04 0x05 0x06 0x07 0x08 Other values 0x40 0x41 0x42 0x43 0x44	Data type integer8 Data type integer16 Data type integer32 Data type unsigned8 Data type unsigned16 Data type unsigned32 Data type floating point See PROFIdrive profile V3.1 Zero (without values as a positive subresponse to a write request) Byte Word Double word Error
	The format and number specify the adjoining space containing values in the telegram. Data types in conformity with PROFIdrive Profile shall be preferred for write access. Bytes, words and double words are also possible as a substitute.		
No. of values	Unsigned8	0x00 ... 0xEA	No. 0 ... 234 Limited by DPV1 telegram length
	Specifies the number of subsequent values.		
Error values	Unsigned16	0x0000 ... 0x00FF	Meaning of error values → see table below
	The error values in the event of a negative response. If the values make up an odd number of bytes, a zero byte is appended. This ensures the integrity of the word structure of the telegram.		
Values	Unsigned16	0x0000 ... 0x00FF	
	The values of the parameter for read or write access. If the values make up an odd number of bytes, a zero byte is appended. This ensures the integrity of the word structure of the telegram.		

Error values in DPV1 parameter responses

Table 9- 33 Error values in DPV1 parameter responses

Error value	Meaning	Remark	Additional info
0x00	Illegal parameter number	Access to a parameter which does not exist.	–
0x01	Parameter value cannot be changed	Modification access to a parameter value which cannot be changed.	Subindex
0x02	Lower or upper value limit exceeded	Modification access with value outside value limits.	Subindex
0x03	Invalid subindex	Access to a subindex which does not exist.	Subindex
0x04	No array	Access with subindex to an unindexed parameter.	–
0x05	Wrong data type	Modification access with a value which does not match the data type of the parameter.	–
0x06	Illegal set operation (only reset allowed)	Modification access with a value not equal to 0 in a case where this is not allowed.	Subindex
0x07	Description element cannot be changed	Modification access to a description element which cannot be changed.	Subindex
0x09	No description data	Access to a description which does not exist (the parameter value exists).	–
0x0B	No operating priority	Modification access with no operating priority.	–
0x0F	No text array exists	Access to a text array which does not exist (the parameter value exists).	–
0x11	Request cannot be executed due to operating status	Access is not possible temporarily for unspecified reasons.	–
0x14	Illegal value	Modification access with a value which is within the limits but which is illegal for other permanent reasons (parameter with defined individual values).	Subindex
0x15	Response too long	The length of the present response exceeds the maximum transfer length.	–
0x16	Illegal parameter address	Impermissible or unsupported value for attribute, number of elements, parameter number, subindex or a combination of these.	–
0x17	Illegal format	Write request: illegal or unsupported parameter data format	–
0x18	No. of values inconsistent	Write request: a mismatch exists between the number of values in the parameter data and the number of elements in the parameter address.	–
0x19	Drive object does not exist	You have attempted to access a drive object that does not exist.	–
0x65	Presently deactivated.	You have tried to access a parameter that, although available, does not currently perform a function (e.g. n control set and access to a V/f control parameter).	–
0x6B	Parameter %s [%s]: no write access for the enabled controller	–	–
0x6C	Parameter %s [%s]: unit unknown	–	–
0x6D	Parameter %s [%s]: Write access only in the commissioning state, encoder (p0010 = 4).	–	–

Error value	Meaning	Remark	Additional info
0x6E	Parameter %s [%s]: Write access only in the commissioning state, motor (p0010 = 3).	–	–
0x6F	Parameter %s [%s]: Write access only in the commissioning state, power unit (p0010 = 2).	–	–
0x70	Parameter %s [%s]: Write access only in the quick commissioning mode (p0010 = 1).	–	–
0x71	Parameter %s [%s]: Write access only in the ready mode (p0010 = 0).	–	–
0x72	Parameter %s [%s]: Write access only in the commissioning state, parameter reset (p0010 = 30).	–	–
0x73	Parameter %s [%s]: Write access only in the commissioning state, Safety (p0010 = 95).	–	–
0x74	Parameter %s [%s]: Write access only in the commissioning state, tech. application/units (p0010 = 5).	–	–
0x75	Parameter %s [%s]: Write access only in the commissioning state (p0010 not equal to 0).	–	–
0x76	Parameter %s [%s]: Write access only in the commissioning state, download (p0010 = 29).	–	–
0x77	Parameter %s [%s] may not be written in download.	–	–
0x78	Parameter %s [%s]: Write access only in the commissioning state, drive configuration (device: p0009 = 3).	–	–
0x79	Parameter %s [%s]: Write access only in the commissioning state, define drive type (device: p0009 = 2).	–	–
0x7A	Parameter %s [%s]: Write access only in the commissioning state, data set basis configuration (device: p0009 = 4)	–	–
0x7B	Parameter %s [%s]: Write access only in the commissioning state, device configuration (device: p0009 = 1).	–	–
0x7C	Parameter %s [%s]: Write access only in the commissioning state, device download (device: p0009 = 29).	–	–

Error value	Meaning	Remark	Additional info
0x7D	Parameter %s [%s]: Write access only in the commissioning state, device parameter reset (device: p0009 = 30).	–	–
0x7E	Parameter %s [%s]: Write access only in the commissioning state, device ready (device: p0009 = 0).	–	–
0x7F	Parameter %s [%s]: Write access only in the commissioning state, device (device: p0009 not 0).	–	–
0x81	Parameter %s [%s] may not be written in download.	–	–
0x82	Transfer of the control authority (master) is inhibited by BI: p0806.	–	–
0x83	Parameter %s [%s]: requested BICO interconnection not possible	BICO output does not supply float values. The BICO input, however, requires a float value.	–
0x84	Parameter %s [%s]: parameter change inhibited (refer to p0300, p0400, p0922)	–	–
0x85	Parameter %s [%s]: access method not defined.	–	–
0xC8	Below the valid values.	Modification request for a value that, although within "absolute" limits, is below the currently valid lower limit.	–
0xC9	Above the valid values.	Modification request for a value that, although within "absolute" limits, is below the currently valid lower limit (e.g. governed by the current converter rating).	–
0xCC	Write access not permitted.	Write access is not permitted because an access key is not available.	–

9.2.4.3 Determining the drive object numbers

Further information about the drive system (e.g. drive object numbers) can be determined as follows using parameters p0101 and r0102:

1. The value of parameter r0102 ("Number of drive objects") for drive object/axis 1 is read via a read request.

   Drive object 1 is the Control Unit (CU), which is a minimum requirement for each drive system.

2. Depending on the result of the initial read request, further read requests for drive object 1 are used to read the indices for parameter p0101 ("Drive object numbers"), as specified by parameter r0102.

   Example:
   If the number of drive objects is "5", the values for indices 0 to 4 for parameter p0101 are read. Of course, the relevant indexes can also be read at once.

9.2.4.4 Example 1: read parameters

Requirements

1. The PROFIdrive controller has been commissioned and is fully operational.
2. PROFIdrive communication between the controller and the device is operational.
3. The controller can read and write data sets in conformance with PROFIdrive DPV1.

Task description

Following the occurrence of at least one fault (ZSW1.3 = "1") on drive 2 (also drive object number 2), the active fault codes must be read from the fault buffer r0945[0] ... r0945[7].

The request is to be handled using a request and response data block.

Basic procedure

1. Create a request to read the parameters.
2. Invoke the request.
3. Evaluate the response.

Activity

1. Create the request.

Parameter request			Offset
Request header	Request reference = 25 hex	Request ID = 01 hex	0 + 1
	Axis = 02 hex	No. of parameters = 01 hex	2 + 3
parameter address	Attribute = 10 hex	No. of elements = 08 hex	4 + 5
	Parameter no. = 945 dec		6
	Subindex = 0 dec		8

Information about the parameter request:

- Request reference:

  The value is selected at random from the valid value range. The request reference establishes the relationship between request and response.

- Request ID:

  01 hex → This identifier is required for a read request.

- Axis:

  02 hex → Drive 2, fault buffer with drive- and device-specific faults

- No. of parameters:

  01 hex → One parameter is read.

- Attribute:

  10 hex → The parameter values are read.
- No. of elements:

  08 hex → The actual fault incident with 8 faults is to be read.
- Parameter number:

  945 dec → p0945 (fault code) is read.
- Subindex:

  0 dec → Reading starts at index 0.

1. Initiate parameter request.

   If ZSW1.3 = "1" → Initiate parameter request
2. Evaluate the parameter response.

Parameter response			Offset
Response header	Request reference mirrored = 25 hex	Response ID = 01 hex	0 + 1
	Axis mirrored = 02 hex	No. of parameters = 01 hex	2 + 3
Parameter value	Format = 06 hex	No. of values = 08 hex	4 + 5
	1. value = 1355 dec		6
	2. value = 0 dec		8
	...		...
	8. value = 0 dec		20

Information about the parameter response:

- Request reference mirrored:

  This response belongs to the request with request reference 25.
- Response ID:

  01 hex → Read request positive, values stored as of 1st value
- Axis mirrored, no. of parameters:

  The values correspond to the values from the request.
- Format:

  06 hex → Parameter values are in the Unsigned16 format.
- No. of values:

  08 hex → 8 parameter values are available.
- 1. value ... 8th value

  A fault is only entered in value 1 of the fault buffer for drive 2.

9.2.4.5 Example 2: write parameters (multi-parameter request)

Requirements

1. The PROFIdrive controller has been commissioned and is fully operational.
2. PROFIdrive communication between the controller and the device is operational.
3. The controller can read and write data sets in conformance with PROFIdrive DPV1.

   Special requirements for this example:
4. Control type: Servo with activated "Extended setpoint channel" function module

Task description

Jog 1 and 2 are to be set up for drive 2 (also drive object number 2) via the input terminals of the Control Unit. A parameter request is to be used to write the corresponding parameters as follows:

- BI: p1055 = r0722.3 Jog bit 0
- BI: p1056 = r0722.4 Jog bit 1
- p1058 = 300 1/min Jog 1 speed setpoint
- p1059 = 600 1/min Jog 2 speed setpoint

The request is to be handled using a request and response data block.

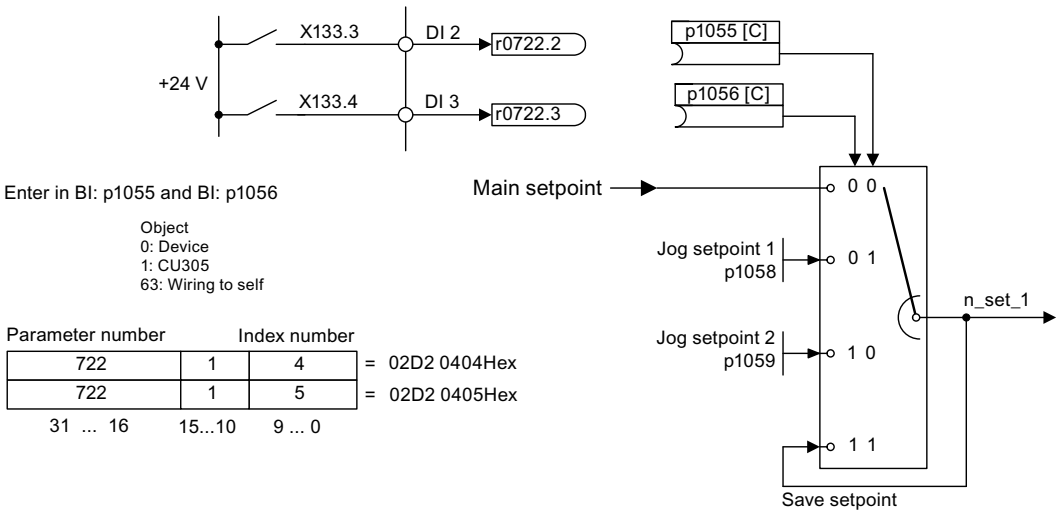

Figure 9-18 Task description for multi-parameter request (example)

Basic procedure

1. Create a request to write the parameters.

2. Invoke the request.
3. Evaluate the response.

Activity

1. Create the request.

Parameter request			Offset
Request header	Request reference = 40 hex	Request ID = 02 hex	0 + 1
	Axis = 02 hex	No. of parameters = 04 hex	2 + 3
1st parameter address	Attribute = 10 hex	No. of elements = 01 hex	4 + 5
	Parameter no. = 1055 dec		6
	Subindex = 0 dec		8
2nd parameter address	Attribute = 10 hex	No. of elements = 01 hex	10 + 11
	Parameter no. = 1056 dec		12
	Subindex = 0 dec		14
3rd parameter address	Attribute = 10 hex	No. of elements = 01 hex	16 + 17
	Parameter no. = 1058 dec		18
	Subindex = 0 dec		20
4th parameter address	Attribute = 10 hex	No. of elements = 01 hex	22 + 23
	Parameter no. = 1059 dec		24
	Subindex = 0 dec		26
4th parameter address	Attribute = 10 hex	No. of elements = 01 hex	22 + 23
	Parameter no. = 1059 dec		24
	Subindex = 0 dec		26
4th parameter address	Attribute = 10 hex	No. of elements = 01 hex	22 + 23
	Parameter no. = 1059 dec		24
	Subindex = 0 dec		26
1st parameter value(s)	Format = 07 hex	No. of values = 01 hex	28 + 29
	Value = 02D2 hex		30
	Value = 0404 hex		32
2nd parameter value(s)	Format = 07 hex	No. of values = 01 hex	34 + 35
	Value = 02D2 hex		36
	Value = 0405 hex		38
3rd parameter value(s)	Format = 08 hex	No. of values = 01 hex	40 + 41
	Value = 4396 hex		42
	Value = 0000 hex		44
4th parameter value(s)	Format = 08 hex	No. of values = 01 hex	46 + 47
	Value = 4416 hex		48
	Value = 0000 hex		50

Information about the parameter request:

- Request reference:

  The value is selected at random from the valid value range. The request reference establishes the relationship between request and response.

- Request ID:

  02 hex → This identifier is required for a write request.

- Axis:

  02 hex → The parameters are written to drive 2.

- No. of parameters

  04 hex → The multi-parameter request comprises 4 individual parameter requests.

1st parameter address ... 4th parameter address

- Attribute:

  10 hex → The parameter values are to be written.

- No. of elements

  01 hex → 1 array element is written.

- Parameter number

  Specifies the number of the parameter to be written (p1055, p1056, p1058, p1059).

- Subindex:

  0 dec → ID for the first array element.

1st parameter value ... 4th parameter value

- Format:

  07 hex → Data type Unsigned32

  08 hex → Data type FloatingPoint

- No. of values:

  01 hex → A value is written to each parameter in the specified format.

- Value:

  BICO input parameter: enter signal source.

  Adjustable parameter: enter value

2. Invoke the parameter request.

3. Evaluate the parameter response.

Parameter response			Offset
Response header	Request reference mirrored = 40 hex	Response ID = 02 hex	0
	Axis mirrored = 02 hex	No. of parameters = 04 hex	2

Information about the parameter response:

- Request reference mirrored:

  This response belongs to the request with request reference 40.
- Response ID:

  02 hex → Write request positive
- Axis mirrored:

  02 hex → The value matches the value from the request.
- No. of parameters:

  04 hex → The value matches the value from the request.

9.3 Communication via PROFIBUS DP

9.3.1 General information about PROFIBUS

General information

PROFIBUS is an open international field bus standard for a wide range of production and process automation applications.

The following standards ensure open, multi-vendor systems:

- International standard EN 50170
- International standard IEC 61158

PROFIBUS is optimized for high-speed, time-critical data communication at field level.

Note

PROFIBUS for drive technology is standardized and described in the following document:
Reference: /P5/ PROFIdrive Profile Drive Technology

CAUTION
Before synchronizing to the isochronous PROFIBUS, all of the pulses of the drive objects must be inhibited - also for those drives that are not controlled via PROFIBUS.

⚠ CAUTION
No CAN cables must be connected to interface X126. If CAN cables are connected, the CU305 and other CAN bus nodes could be seriously damaged.

Master and slave

- Master and slave properties

Table 9- 34 Master and slave properties

Properties	Master	Slave
As bus node	Active	Passive
Send messages	Permitted without external request	Only possible on request by master
Receive messages	Possible with no restrictions	Only receive and acknowledge permitted

- Master

  Masters are categorized into the following classes:

  – Master class 1 (DPMC1):

    Central automation stations that exchange data with the slaves in cyclic and acyclic mode. Communication between the masters is also possible.

    Examples: SIMATIC S7, SIMOTION

  – Master class 2 (DPMC2):

    Devices for configuration, commissioning, operator control and monitoring during bus operation. Devices that only exchange data with the slaves in acyclic mode.

    Examples: Programming devices, human machine interfaces

- Slaves

  With respect to PROFIBUS, the SINAMICS drive unit is a slave.

Bus access method

PROFIBUS uses the token passing method, i.e. the active stations (masters) are arranged in a logical ring in which the authorization to send is received within a defined time frame.

Within this time frame, the master with authorization to send can communicate with other masters or handle communication with the assigned slaves in a master/slave procedure.

PROFIBUS telegram for cyclic data transmission and acyclic services

Each drive unit that supports cyclic process data exchange uses a telegram to send and receive all the process data. A separate telegram is sent in order to perform all the acyclic services (read/write parameters) under a single PROFIBUS address. The acyclic data is transmitted with a lower priority after cyclic data transmission.

The overall length of the telegram increases with the number of drive objects that are involved in exchanging process data.

9.3.2 Commissioning PROFIBUS

9.3.2.1 General information about commissioning

Interfaces and diagnostic LED

A PROFIBUS interface with LEDs and address switches is available on the Control Unit.

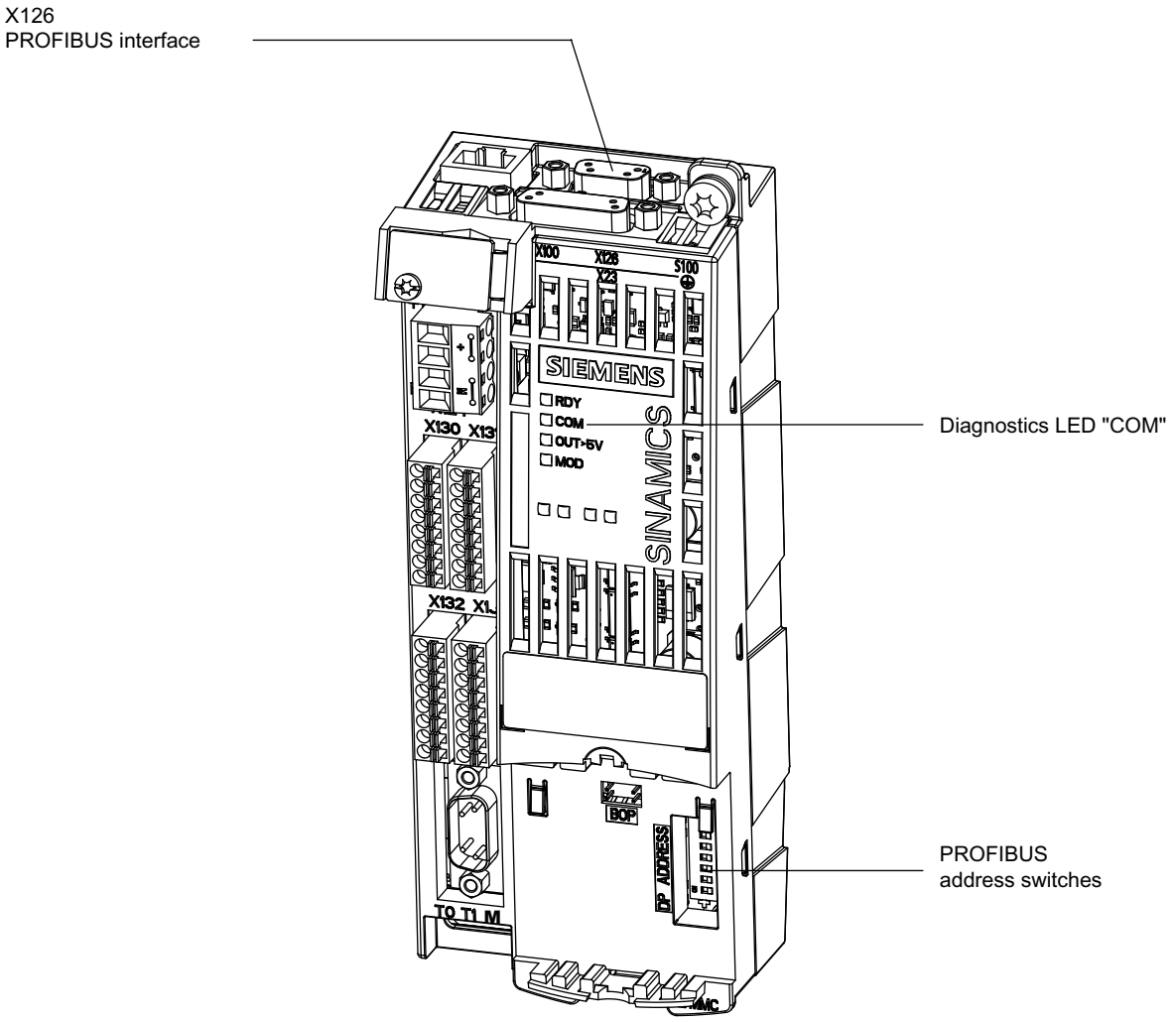

Figure 9-19 Interfaces and diagnostic LED

- PROFIBUS interface

  The PROFIBUS interface is described in the following documentation:

  References: SINAMICS S110 Equipment Manual

- PROFIBUS diagnostic LED

Note

A teleservice adapter can be connected to the PROFIBUS interface (X126) for remote diagnostics purposes.

Setting the PROFIBUS address

Two methods are available for setting the PROFIBUS address:

1. Via the PROFIBUS address switches on the Control Unit
   - In this case, p0918 is read-only and simply displays the set address.
   - A change is not effective until POWER ON.
2. Via p0918
   - You can only use this method when all the PROFIBUS address switches from S1 to S7 are set to ON or OFF.
   - Address changes made via parameters must be saved in a non-volatile memory using the "Copy from RAM to ROM" function.
   - A change is not effective until POWER ON.

Example:

Setting the PROFIBUS address using the PROFIBUS address switches on the Control Unit.

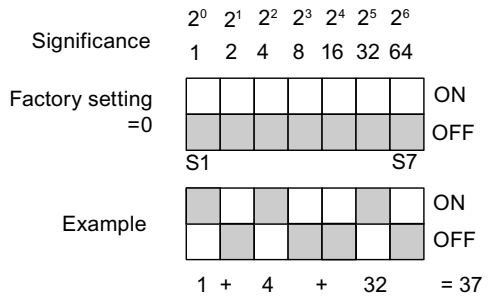

Figure 9-20 Example: PROFIBUS address via PROFIBUS address switch on Control Unit

Note

The factory settings are "ON" or "OFF" for all switches. With these two settings, the PROFIBUS address is set by parameterization.

Parameter p0918 is unique to the Control Unit (see Control Unit). The factory setting is 126.

Address 126 is used for commissioning. Permitted PROFIBUS addresses are 1 ... 126.

If more than one CU is connected to a PROFIBUS line, the address settings must differ from the factory settings. Note that each address can only be assigned once on a PROFIBUS line. This can be achieved using the address switch or by adjustable parameter p0918 accordingly. The setting can be made by connecting the 24 V supply step by step and resetting p0918, for example.

The address setting on the switch is displayed in r2057.

Each change made to the bus address is not effective until POWER ON.

Device master file

A device master file provides a full and clear description of the features of a PROFIBUS slave.

The GSD files can be found at the following locations:

- On the CD for the STARTER commissioning tool

  Order no. 6SL3072-0AA00-0AGx

Device identification

An identification parameter for individual slaves facilitates diagnostics and provides an overview of the nodes on the PROFIBUS.

The information for each slave is stored in the following CU-specific parameter:
r0964[0...6] device identification

Bus terminating resistor and shielding

Reliable data transmission via PROFIBUS depends, amongst other things, on the setting for the bus terminating resistors and the shielding for the PROFIBUS cables.

- Bus terminating resistor

  The bus terminating resistors in the PROFIBUS plugs must be set as follows:

  – First and last nodes in the line: switch on terminating resistor
  – Other nodes in the line: switch off terminating resistor

- Shielding for the PROFIBUS cables

  The cable shield in the plug must be connected at both ends with the greatest possible surface area.

  References: SINAMICS S110 Equipment Manual

9.3.2.2 Commissioning procedure

Preconditions and assumptions for commissioning

PROFIBUS slave

- The PROFIBUS address to be set for the application is known.
- The telegram type for each drive object is known by the application.

PROFIBUS master

- The communication properties of the SINAMICS S110 slave must be available in the master (GSD file or Drive ES slave OM).

Commissioning steps (example with SIMATIC S7)

1. Set the PROFIBUS address on the slave.
2. Set the telegram type on the slave.
3. Carry out the following in HWConfig:
   - Connect the drive to PROFIBUS and assign an address.
   - Set the telegram type.

     The same telegram type as on the slave should be set for every drive object exchanging process data via PROFIBUS.

     The master can send more process data than the slave uses. A telegram with a larger PZD number than is assigned for the drive object STARTER can be configured on the master. The PZDs not supplied by the drive object are filled with zeros.

     The setting "without PZD" can also be defined on a node or object.
4. The I/O addresses must be assigned in accordance with the user program.

9.3.2.3 Diagnostics options

The standard slave diagnostics can be read online in the HW config.

9.3.2.4 SIMATIC HMI addressing

You can use a SIMATIC HMI as a PROFIBUS master (master class 2) to access SINAMICS directly. With respect to SIMATIC HMI, SINAMICS behaves like a SIMATIC S7. For accessing drive parameters, the following simple rule applies:

- Parameter number = data block number
- Parameter sub-index = bit 0 ... 9 of data block offset
- Drive object number = bit 10 ... 15 of data block offset

Pro Tool and WinCC flexible

The SIMATIC HMI can be configured flexibly with "Pro Tool" or "WinCC flexible".
The following specific settings for drives must be observed when configuration is carried out with Pro Tool or WinCC flexible.
Controllers: Protocol always "SIMATIC S7 - 300/400"

Table 9- 35 Other parameters

Field	Value
Network parameter profile	DP
Network parameter baud rate	Any
Communication partner address	PROFIBUS address of the drive unit
Communication partner slot/subrack	don’t care, 0

Table 9- 36 Tags: "General" tab

Field	Value
Name	Any
Control	Any
Type	Depending on the addressed parameter value, e.g.: INT: for integer 16 DINT: for integer 32 WORD: for unsigned 16 REAL: for float
Area	DB
DB (data block number)	Parameter number 1 ... 65535
DBB, DBW, DBD (data block offset)	Drive object No. and sub-index bit 15 ... 10: Drive object No. 0 ... 63 bit 9 ... 0: Sub-index 0 ... 1023 or expressed differently DBW = 1024 * drive object No. + sub-index
Length	Not activated
Acquisition cycle	Any
No. of elements	1
Decimal places	Any

Note

- You can operate a SIMATIC HMI together with a drive unit independently of an existing control.
  A basic "point-to-point" connection can only be established between two nodes (devices).
- The "variable" HMI functions can be used for drive units. Other functions cannot be used (e.g. "messages" or "recipes").
- Individual parameter values can be accessed. Entire arrays, descriptions, or texts cannot be accessed.

9.3.2.5 Monitoring: telegram failure

When monitoring telegram failure, SINAMICS differentiates between two cases:

1. Telegram failure with a bus fault

After a telegram failure and the additional monitoring time has elapsed (p2047), bit r2043.0 is set to "1" and alarm A01920 is output. Binector output r2043.0 can be used for an emergency stop, for example.
Once the delay time (p2044) has elapsed, fault F01910 is output. Fault F01910 triggers fault response OFF2 (pulse inhibit) for the infeed and OFF3 (emergency stop) for SERVO/VECTOR. If no OFF response is to be triggered, the fault response can be reparameterized accordingly.
Fault F01910 can be acknowledged immediately. The drive can then be operated even without PROFIdrive.

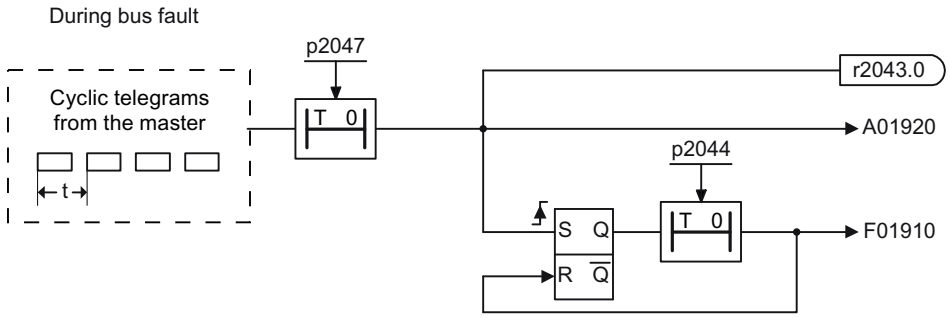

Figure 9-21 Monitoring telegram failure with a bus fault

2. Telegram failure with a CPU stop

After telegram failure, bit r2043.0 is set to "1". Binector output r2043.0 can be used for an emergency stop, for example.
Once the delay time (p2044) has elapsed, fault F01910 is output. Fault F01910 triggers fault response OFF2 (pulse inhibit) for the infeed and OFF3 (emergency stop) for SERVO/VECTOR. If no OFF response is to be triggered, the fault response can be reparameterized accordingly.
Fault F01910 can be acknowledged immediately. The drive can then be operated even without PROFIdrive.

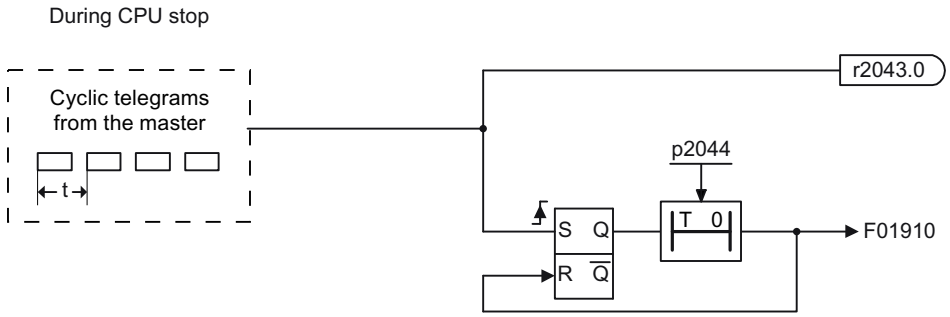

Figure 9-22 Monitoring telegram failure with a CPU stop

Note

The additional monitoring time parameter p2047 is only useful for cyclic communication. During isochronous communication, a telegram failure should be recorded without delay, in order to respond as quickly as possible.

9.3.3 Motion Control with PROFIBUS

Motion Control /Isochronous drive link with PROFIBUS

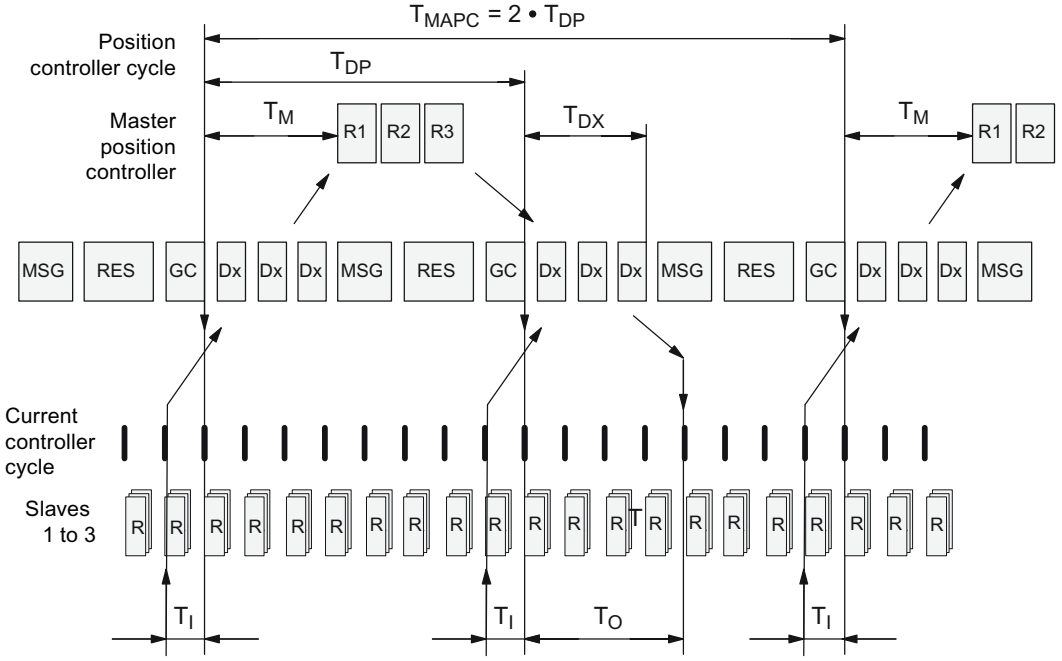

Figure 9-23 Motion Control/Isochronous drive link with PROFIBUS, optimized cycle with T_{MAPC} = 2 • T_{DP}

Sequence of data transfer to closed-loop control system

1. Position actual value G1_XIST1 is read into the telegram image at time T_I before the start of each cycle and transferred to the master in the next cycle.
2. Closed-loop control on the master starts at time T_M after each position controller cycle and uses the current actual values read previously from the slaves.
3. In the next cycle, the master transmits the calculated setpoints to the telegram image of the slaves. The speed setpoint command NSOLL_B is issued to the closed-loop control system at time T_O after the beginning of the cycle.

Designations and descriptions for Motion Control

Table 9- 37 Time settings and meanings

Name	Limit	Description
T_{BASE_DP}	250 µs	Time basis for T_{DP}
T_{DP}	$T_{DP} \geq T_{DP_MIN}$	DP cycle time T_{DP} = Dx + MSG + RES + GC T_{DP} = integer multiple • T_{BASE_DP} T_{DP} = 1 ms T_{DP_MAX} =32 ms

Name	Limit	Description
T_{MAPC}		Master application cycle time This is the time frame in which the master application generates new setpoints (e.g. in the position controller cycle). T_{MAPC} = integer multiple * T_{DP}
T_{BASE_IO}	250 µs	Time basis for T_I, T_O
T_I	$T_{I_MIN} \leq T_I < T_{DP}$	Time of actual-value sensing This is the time at which the actual position value is captured before the start of each cycle. T_I = integer multiple of T_{BASE_IO} When $T_I = 0$: $T_I = T_{DP}$ T_{I_MIN} corresponds to the current controller cycle of the drive object (servo) in the drive unit (= 250 µs).
T_O	$T_{DX} + T_{O_MIN} \leq T_O \leq T_{DP}$	Time of setpoint transfer This is the time at which the transferred setpoints (speed setpoint) are accepted by the closed-loop control system after the start of the cycle. T_O = integer multiple of T_{BASE_IO} When $T_O = 0$: $T_O \doteq T_{DP}$ T_{O_MIN} corresponds to the speed controller cycle of the drive object (servo) in the drive unit (= 250 µs).
T_{DX}	$T_{DX} < T_{DP}$	Data exchange time This is the time required within one cycle for transferring process data to all available slaves.
T_{PLL_W}	-	PLL window
T_{PLL_D}	-	PLL delay time
GC		Global Control Telegram (Broadcast Telegram)
Dx		Data_Exchange This service is used to implement user data exchange between master and slave 1 - n.
MSG		Acyclic service This service is used to implement user data exchange between master and slave 1 - n on an acyclical basis.
RES		Reserve: "Active pause" until the isochronous cycle has expired
R		Calculation time for speed or position controller in the master or slave
T_M		Master time Start of closed-loop master control

Setting criteria for times

- Cycle (T_{DP})
  - T_{DP} must be set to the same value for all bus nodes.
  - $T_{DP} > T_{DX}$ and $T_{DP} > T_O$

    T_{DP} is thus large enough to enable communication with all bus nodes.

    NOTICE

    After T_{DP} has been changed on the PROFIBUS master, the drive system must be switched on (POWER ON) or parameter p0972 = 1 (reset drive unit) must be set.

- T_I and T_O
  - Setting the times in T_I and T_O to be as short as possible reduces the dead time in the position control loop.
  - $T_O > T_{DX} + T_{Omin}$
- A tool can be used for settings and optimization (e.g. HW Config in SIMATIC S7).

Minimum times for reserves

Table 9- 38 Minimum times for reserves

Data	Time required [µs]
Base load	300
Per slave	20
Per byte of user data	1.5
One additional class 2 master	500

User data integrity

User data integrity is verified in both transfer directions (master ↔ slave) by a sign of life (4-bit counter).

The sign of life counters are incremented from 1 to 15 and then start again at 1.

- Master sign of life
  - STW2.12 ... STW2.15 are used for the master sign of life.
  - The master sign of life counter is incremented in each master application cycle (TMAPC).
  - The number of sign-of-life errors tolerated can be set via p0925.
  - p0925 = 65535 deactivates sign-of-life monitoring on the slave.
  - Monitoring

    The master sign of life is monitored on the slave and any sign-of-life errors are evaluated accordingly.

    The maximum number of tolerated master sign-of-life errors with no history can be set via p0925.

    If the number of tolerated sign-of-life errors set in p0925 is exceeded, the response is as follows:

    – A corresponding message is output.

    – The value zero is output as the slave sign of life.

    – Synchronization with the master sign of life is started.
- Slave sign of life
  - ZSW2.12 ... ZSW2.15 are used for the slave sign of life.
  - The slave sign of life counter is incremented in each DP cycle (T_{DP}).

9.3.4 Slave-to-slave communication

9.3.4.1 General information

Description

With PROFIBUS DP, the master addresses all of the slaves one after the other in a DP cycle. In this case, the master transfers its output data (setpoints) to the particular slave and receives as response the input data (actual values). Fast, distributed data transfer between drives (slaves) is possible using the "slave-to-slave communication" function without direct involvement from the master.

The following terms are used for the functions described here:

- Slave-to-slave communication
- Data Exchange Broadcast (DXB.req)
- Slave-to-slave communication (is used in the following)

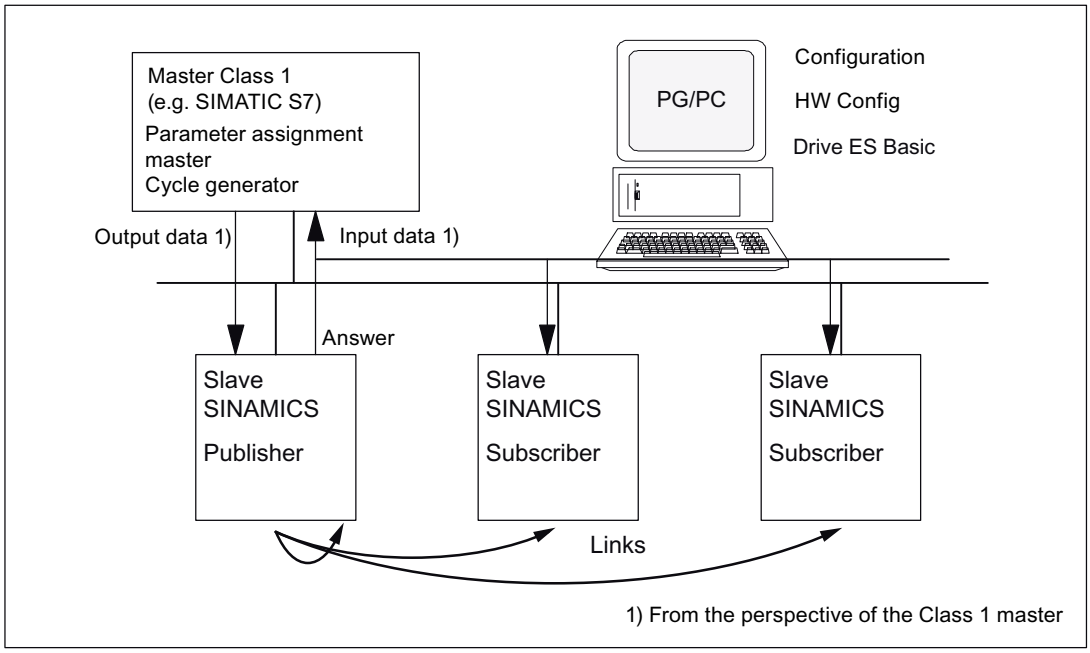

Figure 9-24 Slave-to-slave communication with the publisher-subscriber model

Publisher

With the "slave-to-slave communication" function, at least one slave must act as the publisher.

The publisher is addressed by the master when the output data are transferred with a different layer 2 function code (DXB.req). The publisher then sends its input data to the master with a broadcast telegram to all bus nodes.

Subscriber

The subscribers evaluate the broadcast telegrams, sent from the publishers, and use the data which has been received as setpoints. The setpoints are used, in addition to the setpoints received from the master, corresponding to the configured telegram structure (p0922).

Links and taps

The links configured in the subscriber (connections to publisher) contain the following information:

- From which publisher is input data received?
- Which input data are there?
- Where do the additional setpoints come in?

Several taps are possible within a link. Several input data or input data areas, which are not associated with one another, can be used as setpoint via a tap.

Links are possible to the device itself. This means, e.g. for a Double Motor Module, data can be transferred from drive A to B. This internal link corresponds, as far as the timing is concerned, to a link via PROFIBUS.

Prerequisites and supplementary conditions

The following supplementary conditions should be observed for the "slave-to-slave communication" function:

- Drive ES Basic V5.3 SP3 or higher
- Firmware version V4.3 or higher
- Number of process data, max. per drive
- Number of links to publishers
- Number of taps per link

Applications

For example, the following applications can be implemented using the "slave-to-slave communication" function:

- Axis couplings (this is practical for isochronous mode)
- Specifying binector connections from another slave

9.3.4.2 Setpoint assignment in the subscriber

Setpoints

Information about setpoints:

- Number of setpoint

  When bus communication is being established, the master signals the slave the number of setpoints (process data) to be transferred using the configuring telegram (ChkCfg).

- Contents of the setpoints

  The structure and contents of the data are determined using the local process data configuration for the "SINAMICS slave".

- Operation as "standard" slave

  The drive unit (slave) only receives its setpoints as output data from the master.

- Operation as subscriber

  When a slave is operated as a subscriber, some of the setpoints are defined by one or more publishers rather than by the master.

  The slave is informed of the assignment via the parameterization and configuration telegram when bus communication is being established.

9.3.4.3 Activating/parameterizing slave-to-slave communications

The "slave-to-slave communication" function must be activated both in the publishers as well as in the subscribers, whereby only the subscriber is to be configured. The publisher is automatically activated during bus startup.

Activation in the Publisher

The master is informed abut which slaves are to be addressed as publishers with a different layer 2 function code (DXB request) via the configuration of the subscriber links.

The publisher then sends its input data not only to the master but also as a broadcast telegram to all bus nodes.

These settings are made automatically via the bus configuration tool (e.g. HW Config).

Activation in the Subscriber

The slave, which is to be used as Subscriber, requires a filter table. The slave must know which setpoints are received from the master and which are received from a publisher.

The filter table is created automatically via the bus configuration tool (e.g. HW Config).

The following diagram shows the information contained in the filter table.

Parameterizing telegram (SetPrm)

The filter table is transferred, as dedicated block from the master to the slave with the parameterizing telegram when a bus communication is established.

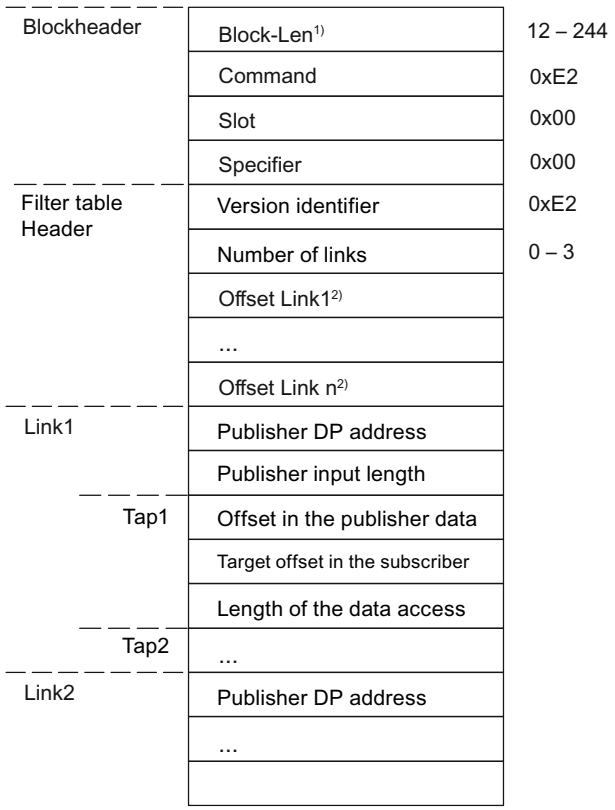

1) Specification in bytes
2) Calculated from Version ID

Figure 9-25 Filter block in the parameterizing telegram (SetPrm)

Configuration telegram (ChkCfg)

Using the configuration telegram, a slave knows how many setpoints are to be received from the master and how many actual values are to be sent to the master.

For slave-to-slave communication, a special space ID is required for each tap. The PROFIBUS configuration tool (e.g. HW Config) generates this ID. The ID is then transferred with the ChkCfg into the drive devices that operate as subscribers.

9.3.4.4 Commissioning of the PROFIBUS slave-to-slave communication

The commissioning of slave-to-slave communication between two SINAMICS drive devices using the additional Drive ES Basic package is described below in an example.

Settings in HW Config

The project below is used to describe the settings in HW Config, using the example "Standard telegrams".

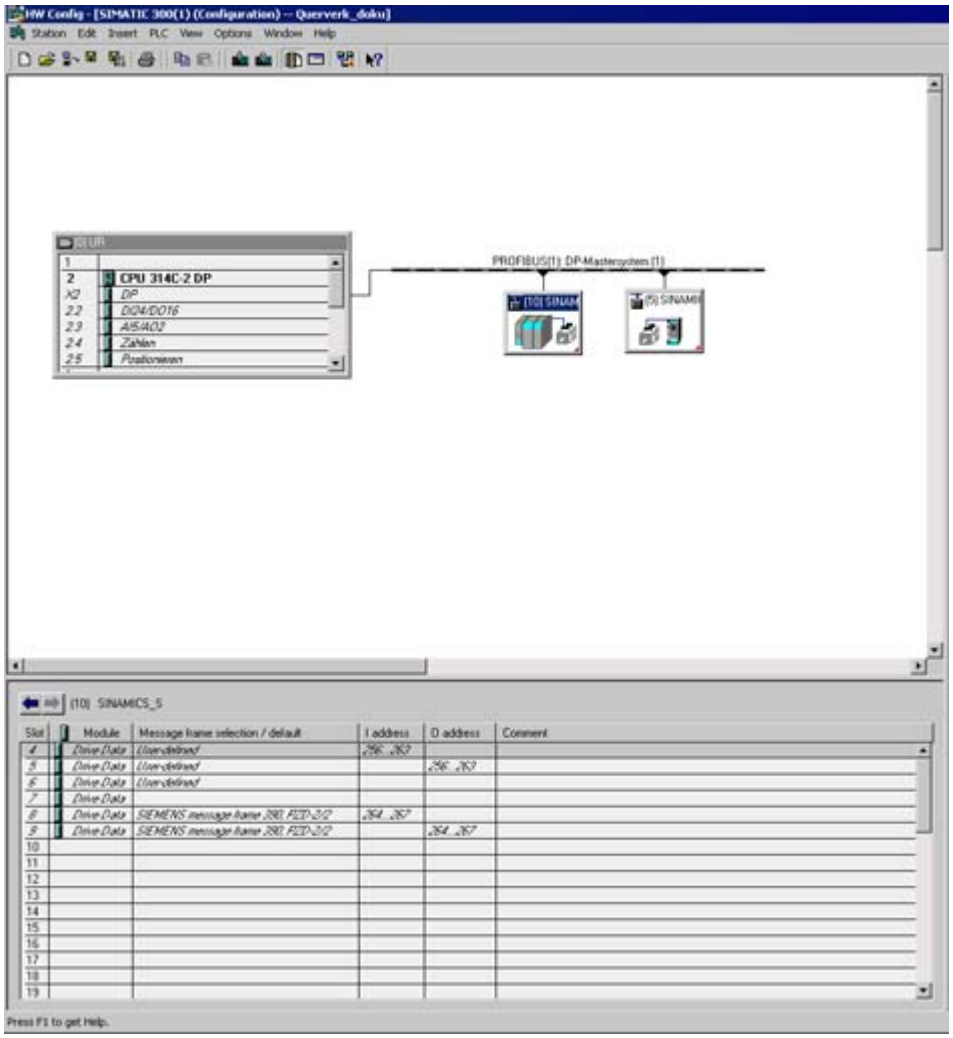

Figure 9-26 Example project of a PROFIBUS network in HW Config

Procedure

1. Select a slave (e.g. SINAMICS S) and use its properties to configure the telegram for the connected drive object.

2. Select a SINAMICS S as a slave and use its properties dialog to configure the telegram portions for the individual drive objects.

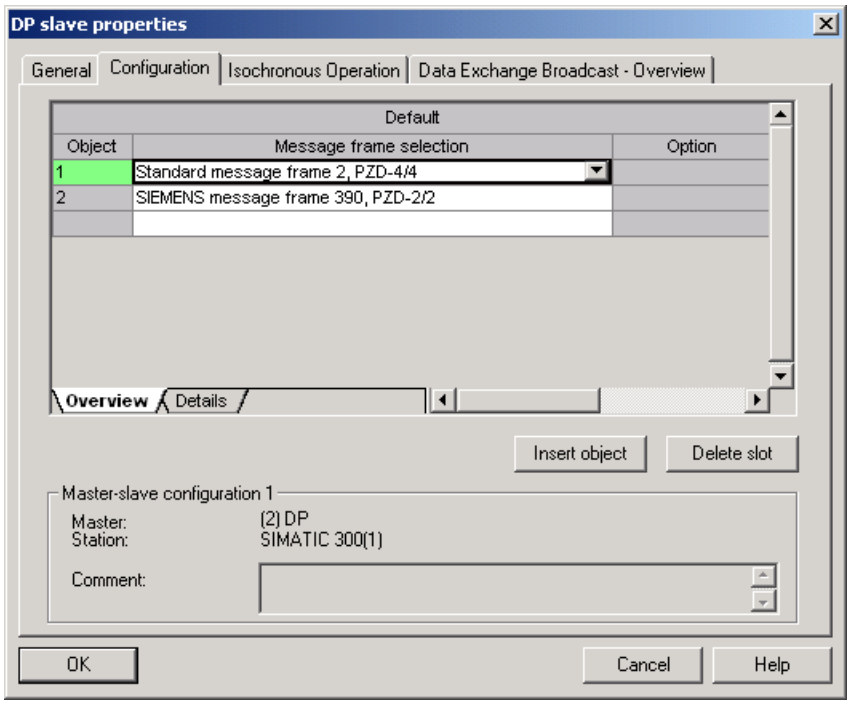

Figure 9-27 Telegram selection for drive object

3. Then switch to the detailed view.
Slots 4/5 contain the actual and setpoint values for the first drive object, e.g. SERVO.
Slots 7/8 are the telegram portion for the actual and setpoint values for the second drive object, e.g. CU.

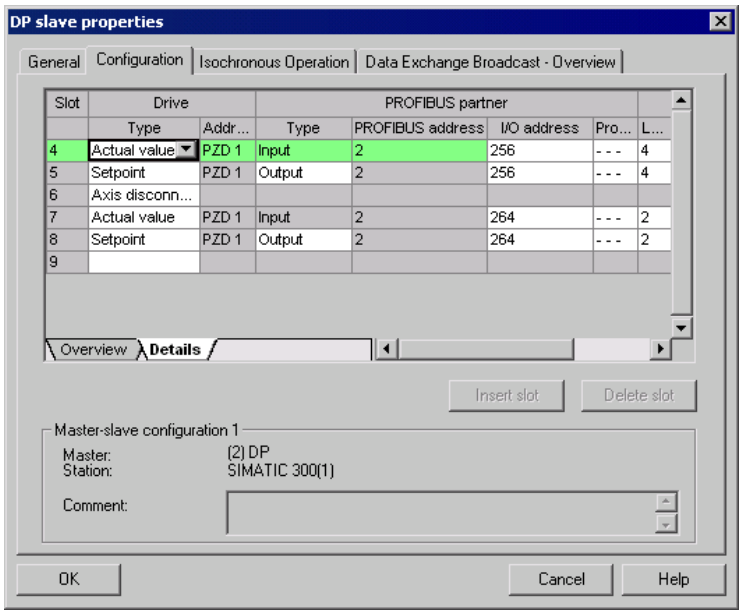

Figure 9-28 Detail view of slave configuration

4. The "Insert slot" button is used to create a new setpoint slot for the first drive object behind the existing setpoint slot.

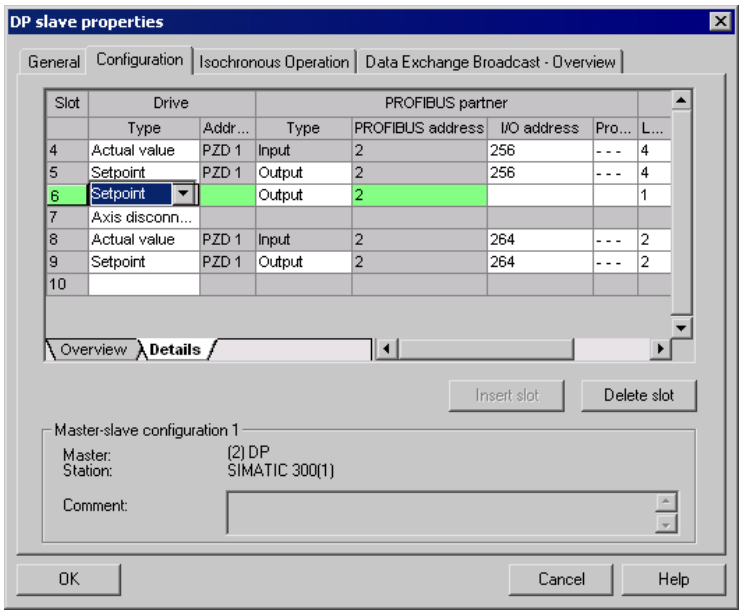

Figure 9-29 Insert new slot

5. Assign the setpoint slot the type "slave-to-slave communication".
6. In the column, select the PROFIBUS DP address of the publisher.
   This displays all PROFIBUS DP slaves from which actual value data can be requested. It also provides the possibility of sharing data via slave-to-slave communication within the same drive device.

7. The "I/O address" column displays the start address for every drive object.
   Select the start address of the data of the drive object to be read. This is 268 in the example.
   If the complete data of the Publisher are not read, set this via the "Length" column. You may also offset the start address for the request, so that data can be read out in the middle of the drive object telegram portion.

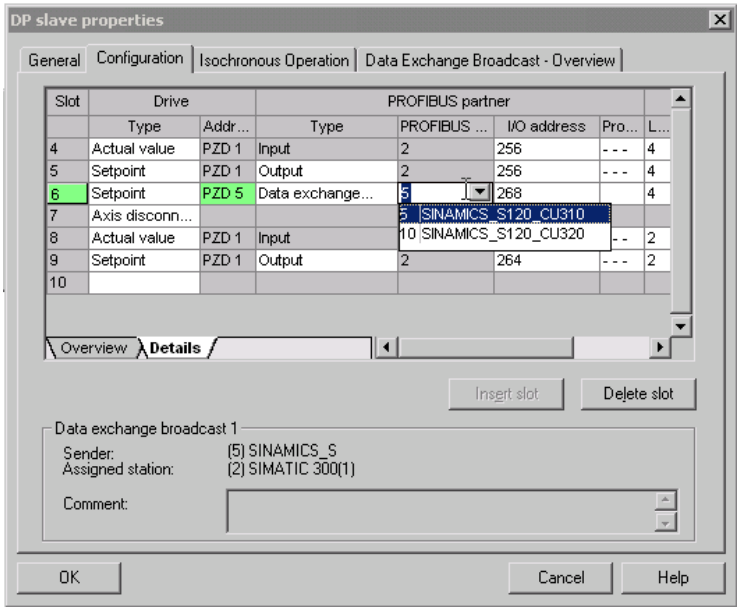

Figure 9-30 Configuring the slave-to-slave communication nodes

8. The "Data Exchange Broadcast - Overview" tab shows you the configured slave-to-slave communication relationships which correspond to the current status of the configuration in HW Config.

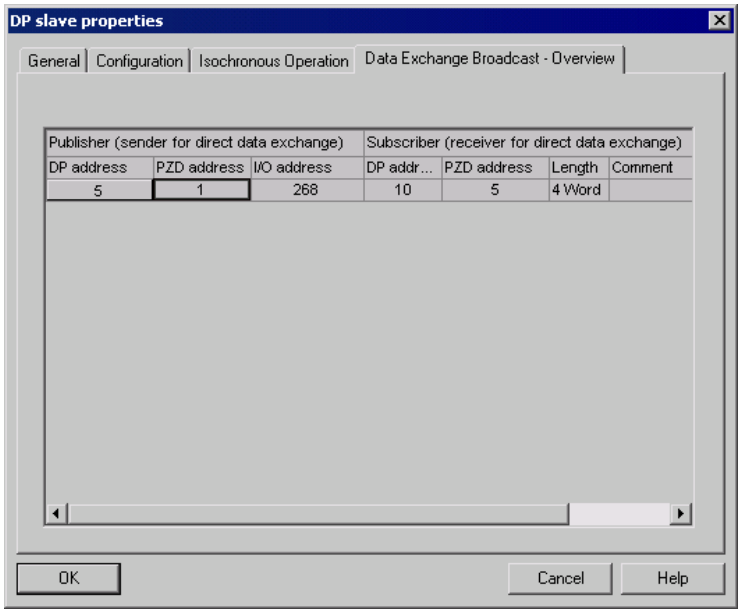

Figure 9-31 Data Exchange Broadcast - Overview

9. After the slave-to-slave communication link has been created, instead of showing "Standard telegram 2" for the drive object, "User-defined" appears in the configuration overview.

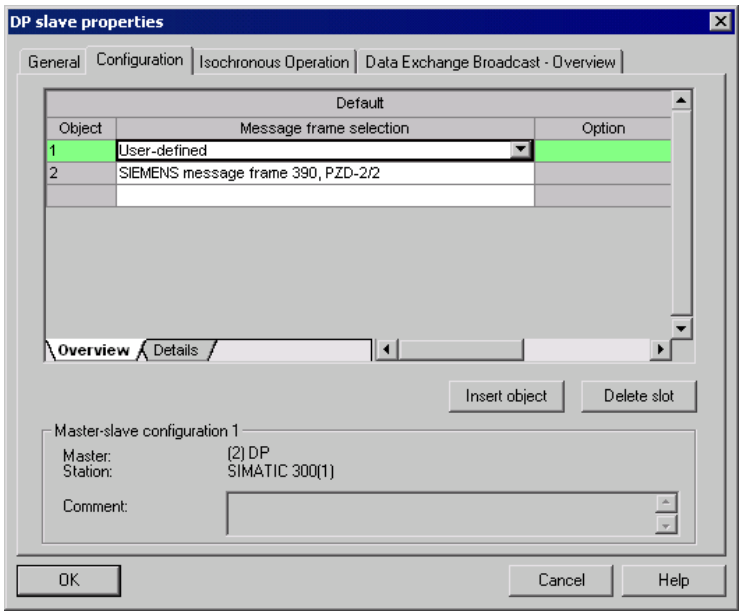

Figure 9-32 Telegram assignment for slave-to-slave communication

10. The details after creation of the slave-to-slave communication link for a drive object of the SINAMICS S drive device are as follows:

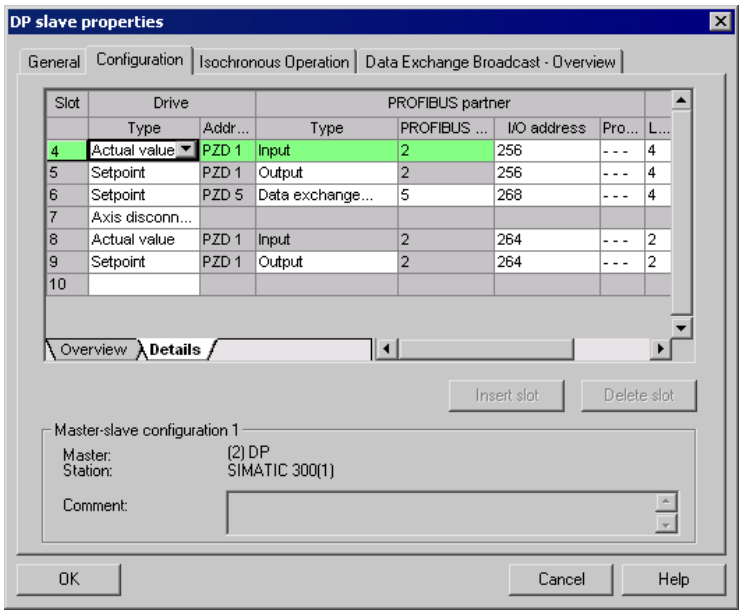

Figure 9-33 Details after the creation of the slave-to-slave communication link

11. You need to adjust the telegrams accordingly for each drive object of the selected drive device which is to actively participate in slave-to-slave communication.

Commissioning in STARTER

Slave-to-slave communication is configured in HWConfig and is simply an extension of an existing telegram. Telegrams can be extended in STARTER (p0922 = 999).

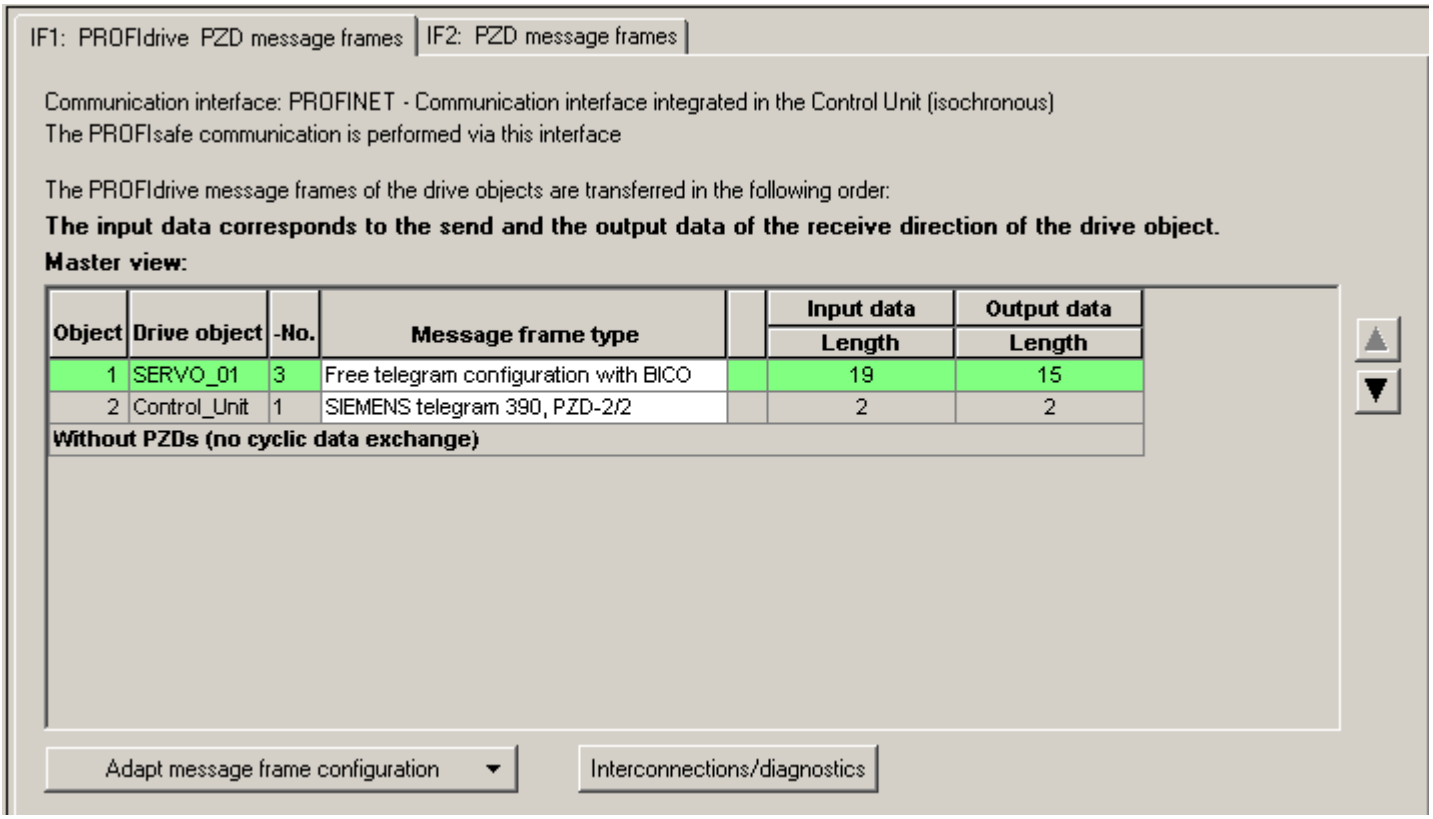

Figure 9-34 Configuring the slave-to-slave communication links in STARTER

To complete the configuration of slave-to-slave communication for the drive objects, the telegram portions of the drive objects in STARTER must be matched to those in the HW Config and extended. The configuration is made centrally via the configuration of the respective drive device.

Procedure

1. In the overview for the PROFIBUS telegram, you can access the telegram portions of the drive objects, here SERVO_01. Select the telegram type "Free telegram configuration with BICO" for the configuration.

2. Enter the telegram lengths for the input data and output data according to the settings in HW Config. For slave-to-slave communication links, the input data consists of the telegram portion of the master and the slave-to-slave communication data.
3. Then, in the telegram selection, set the telegram portion to the "Standard telegram" (in the example: Standard telegram 2), which results in a split display of the telegram types (standard telegram + telegram extension). The telegram extension represents the telegram portion of slave-to-slave communication.

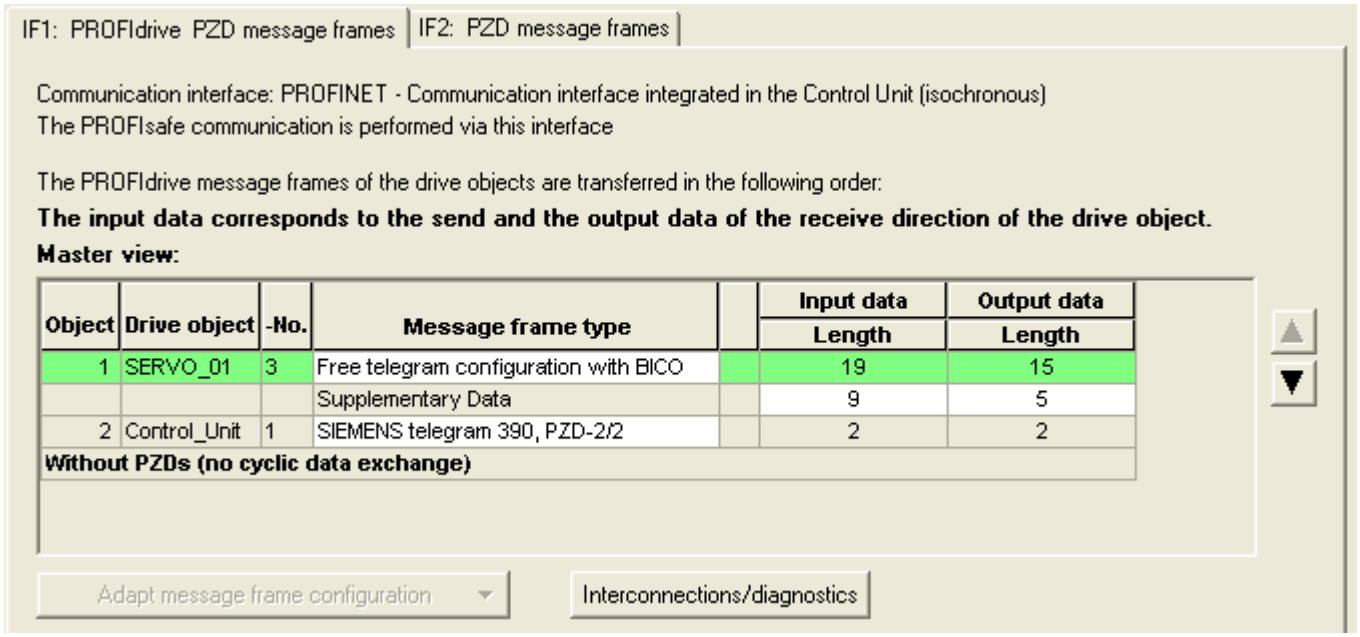

Figure 9-35 Display of the telegram extension

By selecting the item "Communication → PROFIBUS" for the drive object "SERVO_01" in the project navigator, you get the structure of the PROFIBUS telegram in the receive and send direction.
The telegram extension from PZD5 is the portion for slave-to-slave communication.

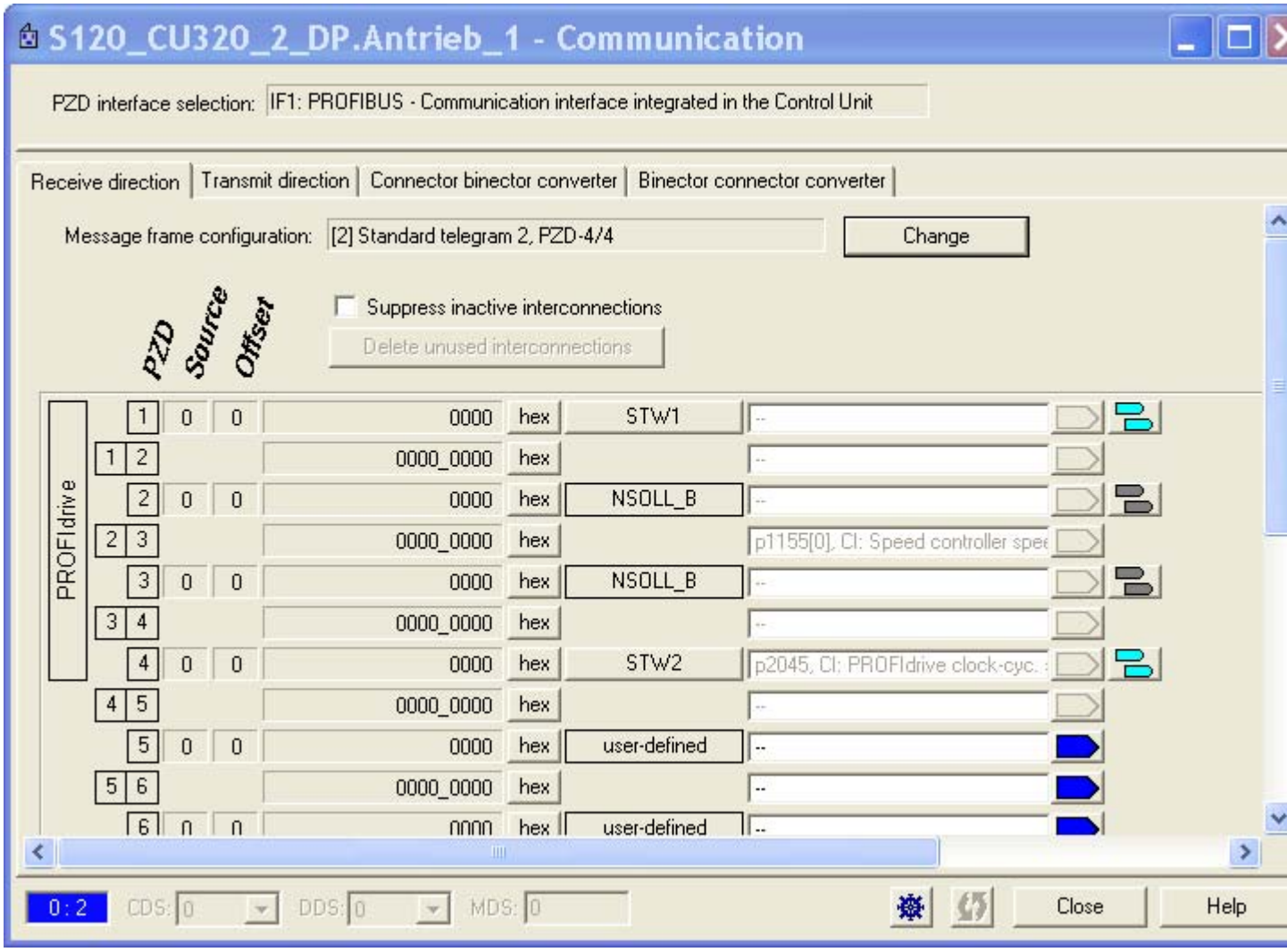

Figure 9-36 Configuring the PROFIBUS slave-to-slave communication in STARTER

To connect the drive objects to the process data which is received via slave-to-slave communication, you also need to connect the appropriate connectors to the corresponding signal sinks. A list for the connector shows all signals that are available for interconnection.

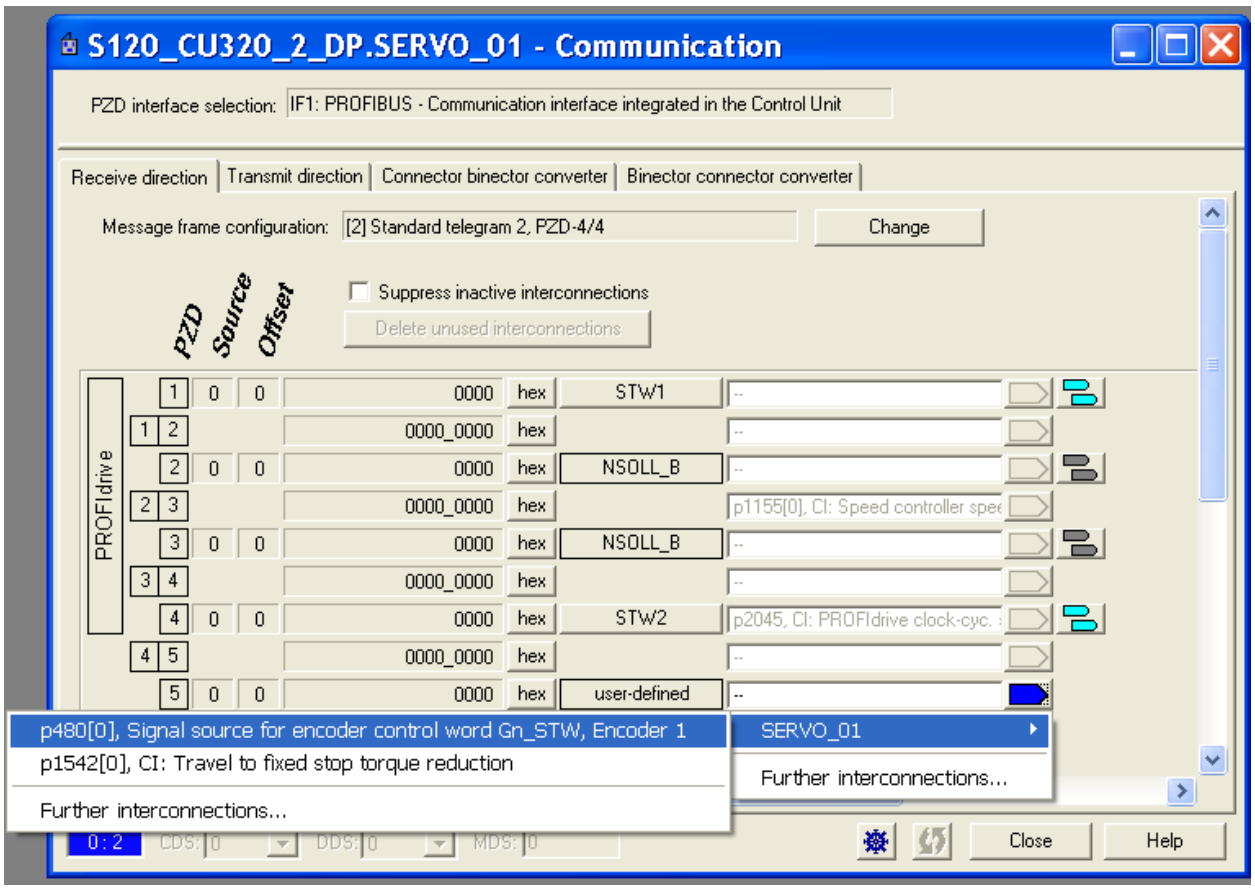

Figure 9-37 Combinding the PZDs for slave-to-slave communication with external signals

9.3.4.5 GSD file

Generic station description file (GSD)

A special generic station description file exists for the SINAMICS family to permit integration of the PROFIBUS slave-to-slave communication in the SINAMICS drive.

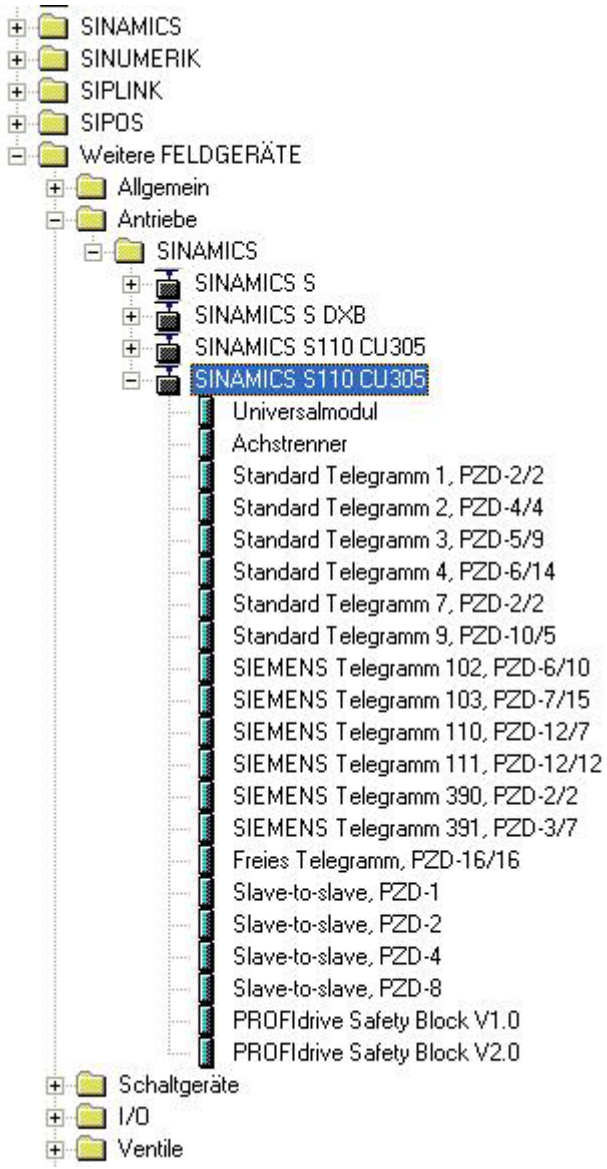

Figure 9-38 Hardware catalog of the generic station description file with slave-to-slave communication functionality

The SINAMICS S DXB GSD file contains standard telegrams, free telegrams and slave-to-slave telegrams for configuring slave-to-slave communication. The user must take these telegram parts and an axis delimiter after each DO to compose a telegram for the drive unit.

The processing of a generic station description file in HW Config is covered by the SIMATIC documentation.

9.3.4.6 Diagnosing the PROFIBUS slave-to-slave communication in STARTER

Diagnostics

Since the PROFIBUS slave-to-slave communication is implemented on the basis of a broadcast telegram, only the subscriber can detect connection or data faults, e.g. via the Publisher data length (see "Configuration telegram").

The Publisher can only detect and report an interruption of the cyclic connection to the DP master (A01920, F01910). The broadcast telegram to the subscriber will not provide any feedback. A fault of a subscriber must be fed back via slave-to-slave communication. In case of a "master drive" 1:n, however, the limited quantity framework (see "Links and requests") should be observed. It is not possible to have n subscribers report their status via slave-to-slave communication directly to the "master drive" (Publisher)!

For diagnostic purposes, there are the diagnostic parameters r2075 ("PROFIBUS diagnostics, receive telegram offset PZD") and r2076 ("PROFIBUS diagnostics, send telegram offset PZD"). The parameter r2074 ("PROFIBUS diagnostics, receive bus address PZD") displays the DP address of the setpoint source of the respective PZD.

r2074 and r2075 enable the source of a slave-to-slave communication relationship to be verified in the Subscriber.

Note

The Subscribers do not monitor the existence of an isochronous Publisher sign of life.

Faults and alarms with PROFIBUS slave-to-slave communication

The alarm A01945 signals that the connection to a least one Publisher of the drive device is missing or has failed. Any interruption to the Publisher is also reported by the fault F01946 at the affected drive object. A failure of the Publisher will therefore only affect the respective drive objects.

More detailed information on the messages can be found in

References: SINAMICS S120/150 List Manual

9.4 Communication via PROFINET IO

9.4.1 General information about PROFINET IO

9.4.1.1 Real-time (RT) and isochronous real-time (IRT) communication

Real-time communication

When communication takes place via TCP/IP, the resultant transmission times may be too long and non-deterministic to meet production automation requirements. When communicating time-critical IO user data, PROFINET IO therefore uses its own real-time channel, rather than TCP/IP.

Determinism

Determinism means that a system will react in a predictable ("deterministic") manner. With PROFINET IO, it is possible to precisely determine (predict) transmission times.

PROFINET IO with RT (Real Time)

Real time means that a system processes external events over a defined period. Process data and alarms are always transmitted in real time (RT) within the PROFINET IO system. RT communication provides the basis for data exchange with PROFINET IO. Real-time data are treated as a higher priority than TCP(UDP)/IP data. Transmission of time-critical data takes place at guaranteed time intervals.

PROFINET IO with IRT (Isochronous Real Time)

Isochronous Real Time Ethernet: Real time property of PROFINET IO where IRT telegrams are transmitted deterministically via planned communication paths in a defined sequence to achieve the best possible synchronism and performance between the IO controller and IO device (drive unit). This is also known as time-scheduled communication whereby knowledge about the network structure is utilized. IRT requires special network components that support planned data transfer.
Cycle times of minimum 500 µs and a jitter accuracy of less than 1 µs can be achieved when this transmission method is implemented.

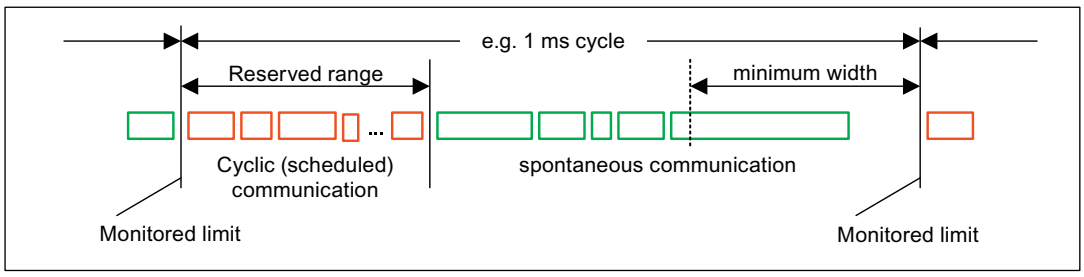

Figure 9-39 Bandwidth distribution/reservation, PROFINET IO

9.4.1.2 Data transfer

Properties

The PROFINET interface on a drive unit supports the simultaneous operation of:

- IRT – isochronous real-time Ethernet
- RT – real-time Ethernet
- Standard Ethernet services (TCP/IP, LLDP, UDP and DCP)

PROFIdrive telegram for cyclic data transmission, acyclic services

Telegrams to send and receive process data are available for each drive object of a drive unit with cyclic process data exchange.
In addition to cyclic data transfer, acyclic services can also be used for parameterizing and configuring the drive unit. These acyclic services can be utilized by the IO supervisor or IO controller.

Sequence of drive objects in cyclic data transmission

The sequence of drive objects is displayed via a list in p0978[0...15] where it can also be changed.

Note

The sequence of drive objects in HW Config must be the same as that in the drive (p0978).

9.4.1.3 General information about PROFINET IO for SINAMICS

General information

PROFINET IO is an open Industrial Ethernet standard for a wide range of production and process automation applications. PROFINET IO is based on Industrial Ethernet and observes TCP/IP and IT standards.

Signal processing in real time and determinism is important in industrial networks. PROFINET IO satisfies these requirements.

The following standards ensure open, multi-vendor systems:

- International standard IEC 61158

PROFINET IO is optimized for high-speed, time-critical data transfers at field level.

PROFINET IO

Within the context of Totally Integrated Automation (TIA), PROFINET IO is the systematic development of the following systems:

- PROFIBUS DP, the established field bus,
  and
- Industrial Ethernet, the communications bus for the cell level.

Experience gained from both systems was and is being integrated into PROFINET IO. As an Ethernet-based automation standard defined by PROFIBUS International (PROFIBUS user organization), PROFINET IO is a manufacturer-independent communication and engineering model.

PROFINET IO defines every aspect of the data exchange between IO controllers (devices with so-called "master functionality" and the IO devices (those with so-called "slave functionality") as well as parameterization and diagnostic processes. An IO system is configured by virtually the same method used for PROFIBUS.

A PROFINET IO system is assembled from the following devices:

- The IO controller controls automation tasks.
- An IO device is controlled and monitored by an IO controller. An IO device consists of several modules and submodules.
- IO supervisor is an engineering tool typically based on a PC that is used to parameterize and diagnose individual IO devices (drive units).

IO device: Drive units with PROFINET interface

- SINAMICS S120 with CU320-2 DP and inserted CBE20
- SINAMICS S120 with CU320-2 PN
- SINAMICS S120 with CU310-2 PN

Cycle communication using PROFINET IO with IRT or using RT is possible on all drive units equipped with a PROFINET interface. This means that problem-free communication using other standard protocols is guaranteed within the same network.

Note

PROFINET for drive technology is standardized and described in the following document:

PROFIBUS Profile PROFIdrive – Profile Drive Technology

Version V4.1, May 2006,

PROFIBUS User Organization e. V.

Haid-und-Neu-Straße 7,

D-76131 Karlsruhe

http://www.profibus.com,

Order no. 3.172, spec. Chapter 6

- IEC 61800-7

CAUTION
The cyclic PZD channel for PROFIBUS DP is initially deactivated when the **CBE20** is plugged in and for the CU320 2 DP. It can however be activated again with parameter (p8839) (see chapter "Parallel operation of communication interfaces").

9.4.1.4 Addresses

MAC address

Each PROFINET interface is assigned a worldwide unique device identifier in the factory. This 6-byte long device identifier is the MAC address. The MAC address is divided up as follows:

- 3 bytes manufacturer's ID and
- 3 bytes device identifier (consecutive number).

The MAC address is on the corresponding rating plate (CU305-PN).

e.g.: 08-00-06-6B-80-C0

IP address

To allow a PROFINET device to be addressed as a node on Industrial Ethernet, this device also requires an IP address that is unique within the network. The IP address is made up of 4 decimal numbers with a range of values from 0 through 255. The decimal numbers are separated by a period. The IP address is made up of

- The address of the (sub-) network and
- The address of the node (generally called the host or network node)

IP address assignment

The TCP/IP protocol is a prerequisite for establishing a connection and parameterization. This is the reason that an IP address is required.

The IP addresses of IO devices can be assigned by the IO controller and always have the same sub-network mask as the IO controller. In this case, the IP address is not stored permanently. The IP address entry is lost after POWER ON/OFF. If the IP address is to be stored in a non-volatile memory, the address must be assigned using the Primary Setup Tool (PST).

This can also be performed with HW Config of STEP 7, where the function is called "Edit Ethernet node".

Note

If the network is part of an existing Ethernet company network, obtain the information (IP address) from your network administrator.

Device name (NameOfStation)

When it is shipped, an IO device does not have a device name. An IO device can only be addressed by an IO controller, for example, for the transfer of project engineering data (including the IP address) during startup or for user data exchange in cyclic operation, after it has been assigned a device name with the IO supervisor.

NOTICE
The device name must be stored retentively using either the Primary Setup Tool (PST) or with HW Config of STEP 7.

Replacing the Control Unit CU305-DP (IO device)

If the IP address and device name are stored in non-volatile memory on a suitable memory card, this data is also forwarded with the Control Unit memory card.

If a complete Control Unit needs to be replaced due to a device or module defect, the new Control Unit automatically parameterizes and configures using the data on the memory card. Following this, cyclic exchange of user data are restarted. The memory card allows module exchange without an IO supervisor when a fault occurs in a PROFINET device.

9.4.1.5 PROFINET: Address parameters

Overview of important parameters (see SINAMICS S110 List Manual)

For integrated PROFINET interface

- p8920[0...239] PN Name of station
- p8921[0...3] PN IP Address of station
- p8922[0...3] PN Default gateway of station
- p8923[0...3] PN Subnet mask of station
- p8925 PN interface configuration
- p8929 PN Number of remote controllers
- r8930[0...239] PN Name of station active
- r8931[0...3] PN IP Address of station active
- r8932[0...3] PN Default gateway of station active
- r8933[0...3] PN Subnet mask of station active
- r8935[0...5] PN MAC address of station
- r8936[0...1] PN State of the cyclical connections
- r8937[0...5] PN Diagnostics

9.4.2 Hardware setup

9.4.2.1 Structuring CU305 with PROFINET

PROFINET interface for CU305 PN

A PROFINET interface with 2 ports is integrated in the CU305 PN module.

Note

The ports must not be interconnected in such a way that a ring topology is created.

References

- The PROFINET interface on the CU305 PN unit is described in the document: SINAMICS S110 Manual.

Clock generation via PROFINET IO (isochronous communication)

The SINAMICS S110 with CU305 PN can only assume the role of a synchronization slave within a PROFINET IO network.

The following applies for a CU305 PN:

- Transmission type IRT, IO device is synchronization slave and isochronous, send clock cycle is applied to bus: Control Unit synchronizes with the bus and the send clock cycle becomes the cycle for the Control Unit.
- RT or IRT (option drive unit "not isochronous") has been configured. The SINAMICS does not use a local clock (clock configured in SINAMICS).

Telegrams

PROFIdrive telegrams are available for implementing cyclic communication via PROFINET IO (see section "Communication according to PROFIdrive", cyclic communication).

DCP flashing

This function is used to check the correct assignment to a module and its interfaces. This function is supported by SINAMICS S110 with CU305 PN.

1. In HW Config or STEP7 Manager, select the menu item "Target system" > "Ethernet" > "Edit Ethernet node".
2. The "Edit Ethernet node" dialog box opens.
3. Click on the "Browse" button.
4. The "Browse Network" dialog box opens and displays the connected nodes.
5. After the SINAMICS S110 with CU305 PN has been selected as a node, activate the "DCP flashing" function by means of the "Flash" button.

The "DCP flashing" function is activated on the RDY (READY LED 2 Hz, green/orange or red/orange) LED display on the CU305PN.

The LED will continue to flash as long as the dialog is open. When the dialog is closed, the LED will go out automatically. The function is available as of STEP7 V5.3 SP1 via Ethernet.

STEP 7 Routing

The CU305 does not support STEP 7 routing between PROFIBUS and PROFINET IO.

Connecting the IO supervisor

You can go online with the STARTER in a number of ways, which are illustrated below:

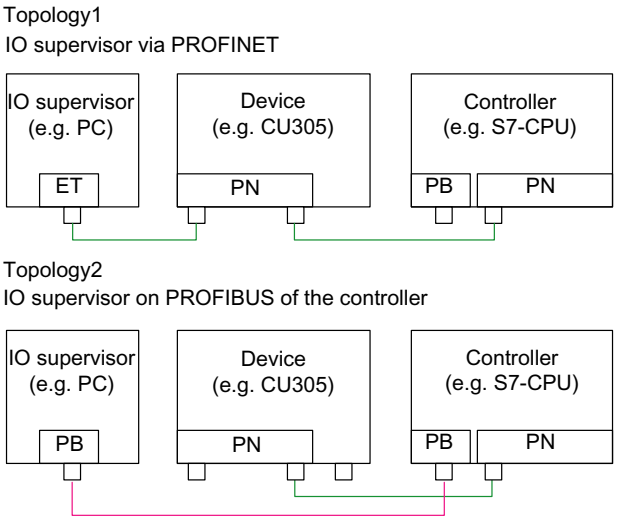

Figure 9-40 Connecting the IO supervisor

9.4.3 RT classes for PROFINET IO

PROFINET IO is a scalable realtime communication system based on Ethernet technology. The scalable approach is expressed with three realtime classes.

RT

RT communication is based on standard Ethernet. The data are transferred via prioritized Ethernet telegrams. Because standard Ethernet does not support any synchronization mechanisms, isochronous operation is not possible with PROFINET IO with RT! The real-time capability is comparable with the present PROFIBUS DP solutions with 12 MBaud, i.e. a sufficiently large bandwidth portion is available for the parallel transmission of IT services on the same line.

The real update cycle in which cyclic data are exchanged depends on the bus load, the devices used and the quantity framework of the I/O data. The update cycle is a multiple of the send cycle.

IRT

Two options are available with this RT class:

- IRT "high flexibility"
- IRT "high performance".

Software preconditions for configuring IRT:

- STEP 7 5.4 SP4 (HW Config)

Note

For further information about configuring the PROFINET interface for the I/O controller and I/O device, please refer to the following document: SIMOTION SCOUT Communication System Manual.

IRT "high flexibility"

The telegrams are sent cyclically in a deterministic cycle (Isochronous Real Time). The telegrams are exchanged in a bandwidth reserved by the hardware. One IRT time interval and one standard Ethernet time interval are created for each cycle.

Note

IRT "high flexibility" cannot be used for isochronous applications.

IRT "high performance"

In addition to the bandwidth reservation, the telegram traffic can be further optimized by configuring the topology. This enhances the performance during data exchange and the deterministic behavior. The IRT time interval can thus be further optimized or minimized with respect to IRT "high flexibility".

In addition to the isochronous data transfer provided by IRT, even the application itself (position control cycle, IPO cycle) can be isochronous in the devices. This is an essential requirement for closed-loop axis control and synchronization via the bus. Isochronous data transfer with cycle times well below one millisecond and with a deviation in the cycle start (jitter) of less than a microsecond provide sufficient performance reserves for demanding motion control applications.

The RT classes IRT "high flexibility" and IRT "high performance" can be selected as options in the synchronization settings configuration area of HW Config. In the description below, both these classes are simply referred to as "IRT".

In contrast to standard Ethernet and PROFINET IO with RT, the telegrams for PROFINET IO with IRT are transmitted according to a schedule.

Comparison between RT and IRT

Table 9- 39 Comparison between RT and IRT

RT class	RT	IRT "high flexibility"	IRT "high performance"
Transfer mode	Switching based on the MAC address; prioritization of the RT telegrams possible using Ethernet-Prio (VLAN tag)	Switching using the MAC address; bandwidth reservation by reserving an IRT "high flexibility" interval in which only IRT "high flexibility" frames are transferred but, for example, no TCP/IP frames	Path-based switching according to a topology-based plan; no transmission of TCP/IP frames and IRT "high flexibility" frames in the IRT "high performance" interval.
Isochronous application in the IO controller	No	No	Yes
Determinism	Variance of the transmission duration by started TCP/IP telegrams	Guaranteed transmission of the IRT "high flexibility" telegrams in the current cycle by the reserved bandwidth.	Exactly planned transfer; times for transmission and receiving are guaranteed for any topologies.
Reload the network configuration after a change	Not relevant	Only when the size of the IRT "high flexibility" interval needs to be modified (reservation of position is possible)	Whenever the topology or the communication relationships change
Maximum switching depth (number of switches in one line)	10 at 1 ms	61	32
For possible send cycles, see subitem "Send cycles and update cycles for RT classes" in table "Adjustable send cycles and update cycles"			

Set the RT class

The RT class is set by means of the properties of the controller interface of the IO controller. If RT class IRT "high performance" is set, it is not possible to operate any IRT "high flexibility" devices on the IO controller and vice versa. IO devices with RT can always be operated, regardless of the IRT class setting.

You can set the RT class in the HW Config for the associated PROFINET device.

1. In HW Config, double-click on item PROFINET interface in the module.

   The "Properties" dialog box is opened.

2. Select the RT class under RT class on the "Synchronization" tab.
3. Once you have selected "IRT", you can also choose between option "high flexibility" and "high performance".
4. Confirm with "OK".

Synchronization domain

The sum of all devices to be synchronized form a synchronization domain. The whole domain must be set to a single, specific RT class (real-time class) for synchronization, Different synchronization domains can communicate with one another via RT.

For IRT, all IO devices and IO controllers must be synchronized with a common synchronization master.

RT allows an IO controller to communicate with a drive unit outside a synchronization domain or "through" another synchronization domain. As of version 5.4 SP1, STEP 7 supports multiple synchronization domains on a single Ethernet subnet.

Example:

- Synchronization domain IRT : SIMOTION 2 with SINAMICS
- SINAMICS, which is assigned to the IO system of SIMOTION 1, is arranged in the topology in such a way that its RT communication must be conducted through the IRT synchronization domain.

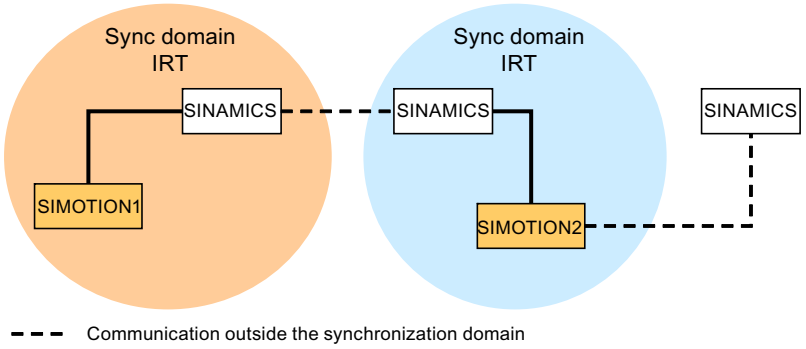

Figure 9-41 RT communication across the limits of synchronization domains

Update cycles and send cycles for RT classes

Definition of update time/send cycle:
If we take a single IO device in the PROFINET IO system as an example, this device has been supplied with new data (outputs) by the IO controller and has transferred new data (inputs) to the IO controller within the update time. The send cycle is the shortest possible update cycle.

All cyclic data are transferred within the send cycle. The actual send cycle that can be set depends on various factors:

- Bus load
- Type of devices used
- Computing capacity available in the IO controller
- Supported send clocks in the participating PROFINET devices of a synchronization domain A typical send cycle is e.g. 1 ms

The table below specifies the reduction ratios which can be set between the send cycle and the update times for IRT "high performance", IRT "high flexibility", and RT.

Table 9- 40 Settable send cycles and update cycles

Send cycle		Reduction ratio between update and send cycles	
		RT IRT "high flexibility" 4)	IRT "high performance"
Range "even" 1)	250, 500, 1000 µs	1,2,4,8,16,32,64,128,256,512	1,2,4,8,16 2)
	2000 µs	1,2,4,8,16,32,64,128,256	1,2,4,8,16 2)
	4000 µs	1,2,4,8,16,32,64,128	1,2,4,8,16 2)
Range "uneven" 3)	375, 625, 750, 875, 1125, 1250 µs ... 3875 µs (increment 125 µs)	not supported 5)	1

Note

There is no intersection between the send cycles for the "even" and "uneven" ranges!

Explanations for the above table:

1) It is only possible to set send cycles from the "even" range when IO devices with RT class "RT" are assigned to a synchronization domain. Likewise, only the reduction ratios from the "even" range can be set for a send cycle setting from the "even" range.

2) It is generally only possible to set a reduction ratio of 1:1 between the update time and send cycle for IO devices (ET200S IM151-3 PN HS, SINAMICS S) which are operated in isochronous mode. In this case, the update cycle mode must always be set to "fixed factor" (under I/O device properties, "IO cycle" tab, "Mode" pulldown menu). This means that STEP 7 will not automatically adjust the update cycle and thus the update cycle will always correspond to the send cycle.

3) The send cycles from the "uneven" range can be set only if a synchronization domain does not include any IO devices with RT class "RT". Likewise, only the reduction ratios from the "uneven" range can be set for a send cycle setting from the "uneven" range.

4) Isochronous operation is not compatible with IRT "high flexibility".

5) Uneven send cycles can be used only if the IO systems assigned to the synchronization domain do not include any RT or IRT "high flexibility" devices.

Furthermore, the send cycles which can actually be set are determined by the intersection of the send cycles supported by all the devices in the synchronization domain.

The reduction ratio between the update cycle of an IO device and the send cycle is set in the "Properties" of the PROFINET interface for the relevant device.

Send cycles for SINAMICS drive units

A SINAMICS drive unit with PROFINET interface which supports IRT permits send cycle settings of between 0.5 ms and 4.0 ms in a 250 µs time frame.

Topology rules

Topology rules for RT

- A topology can be, but need not be configured for RT. If a topology has been configured, the devices must be wired in accordance with the topology.
- Otherwise, the wiring between devices is entirely optional.

Topology rules for IRT

- Mixed operation is not supported by STEP 7 V5.4 SP4, i.e. IRT "high performance" cannot be combined with IRT "high flexibility" in the same synchronization domain.
- A synchronization domain with IRT "high performance" can contain a maximum of one IRT "high performance" island. "Island" means that the devices must be interconnected to match the configured topology. A synchronization master must be positioned in the relevant island.
- IRT "high flexibility" is subject to the same topology rules as IRT "high performance", the only exception being that a topology does not need to be configured. However, if a topology has been configured, the devices must be wired to match the topology.

Device selection in HW Config

Hardware catalog:
The drive unit from the appropriate unit family entry in the hardware catalog must be configured. For the RT class IRT, these are all entries with the end identification ...PN-V2.2.

GSD:
The names of GSD files for devices which contain IRT end in …PN-V2.2.

9.4.4 Selection of the PROFINET variant

SINAMICS S110 supports the PROFINET variant:

- PROFINET version 2.2 (RT class IRT)

The PROFINET variant required is stored in a separate UFW file for each variant. The pointer file **optboard.txt** contains the names of the UFW files to be loaded. The pointer file refers to PROFINET V2.2 by default.

Table 9- 41 UFW file and selection in the pointer file

UFW file and folder on memory card	Functionality	Pointer file content
/SIEMENS/SINAMICS/CODE/CB/ CBE20_1.UFW	PROFINET V2.2	CBE20=1

Identification of firmware version:
The OMI diagnostic channel, parameter r8858 can be read to identify which firmware version of PROFINET interface is currently loaded.

9.4.5 PROFINET GSD

For integration into a PROFINET network, SINAMICS S110 supports two different PROFINET GSD versions (device master file):

- PROFINET GSD for compact modules
- PROFINET GSD with subslot configuring

PROFINET GSD for compact modules

With the PROFINET GSD for compact modules, you can precisely configure a complete module which corresponds to a drive object. Each of these modules involves two subslots: The Parameter Access Point (PAP) and a PZD telegram for transferring process data. You can identify the PROFINET GSD for compact modules by the following structure of the file name:
GSDML-V2.25-Siemens-Sinamics_S110-20100803.xml (example)

PROFINET GSD with subslot configuring

PROFINET GSD with subslot configuring allows standard telegrams to be combined with a PROFIsafe telegram - and if required, a telegram extension. Each of the modules has four subslots: The Module Access Point (MAP), the PROFIsafe telegram, a PZD telegram to transfer process data and where relevant, a telegram for PZD extensions. You can identify the PROFINET GSD with subslot configuring by the following structure of the file name:
GSDML-V2.2-Siemens-Sinamics_S110_SL-20100803.xml (example)

The following table shows the possible submodules depending on the particular Drive Object.

Table 9- 42 Submodules depending on the particular Drive Object

Module	Subslot 1 MAP	Subslot 2 PROFIsafe	Subslot 3 PZD telegram	Subslot 4 PZD extension	Max. number of PZD
Servo	MAP	Telegram 30	Telegrams: 1...111 free PZD-16/16	PZD-2/2, -2/4, -2/6	20/28
Control Unit	MAP	Reserved	Telegrams: 390, 391, 392, 393, 394 free PZD-4/4	Reserved	5/21

Note:

The telegrams in subslots 2, 3 and 4 can be freely configured, i.e. they can also remain empty.

Configuring

Configuring the three versions is only briefly sketched out in the following:

- Compact module:
  - Insert a module "DO Servo/Servo/...".
  - Assign the I/O addresses.
- Subslot configuring without new functionality:
  - Insert a module "DO with telegram xyz".
  - Insert a submodule "PZD telegram xyz".
  - Assign the I/O addresses.
- Subslot configuring with optional PROFIsafe and PZD extension:
  - Insert a module "DO Servo/Servo/...".
  - Insert the optional submodule "PROFIsafe telegram 30".
  - Insert a submodule "PZD telegram xyz".
  - Insert the optional submodule "PZD extension".
  - Assign the I/O addresses for the module and the submodules.

You will find a detailed description for processing a GSD file in HW Config in the SIMATIC documentation.

9.4.6 Motion Control with PROFINET

Motion Control/Isochronous drive link with PROFINET

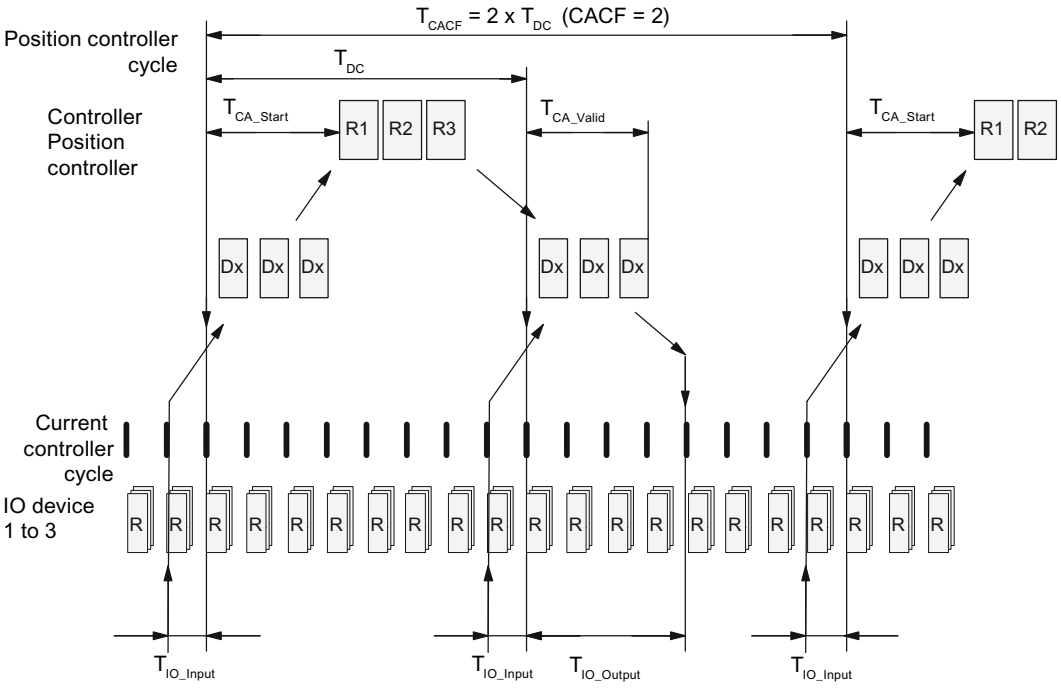

Figure 9-42 Motion Control/Isochronous drive link with PROFINET, optimized cycle with CACF = 2

Sequence of data transfer to closed-loop control system

1. Position actual value G1_XIST1 is read into the telegram image at time T_{IO_Input}before the start of each cycle and transferred to the master in the next cycle.
2. Closed-loop control on the master starts at time T_{CA_Start} after each position controller cycle and uses the current actual values read previously from the slaves.
3. In the next cycle, the master transmits the calculated setpoints to the telegram image of the slaves. The speed setpoint command NSOLL_B is issued to the closed-loop control system at time T_{IO_Output} after the beginning of the cycle.

Designations and descriptions for motion control

Table 9- 43 Time settings and meanings

Name	Limit value	Description
T_{DC_BASE}	-	Time basis for cycle time T_{DC} calculation: T_{DC_BASE} =T_DC_BASE • 31.25 µs = 4 • 31.25 µs = 125 µs
T_{DC}	T_DC_MIN ≤ T_DC ≤ T_DC_MAX	Cycle time T_{DC} = T_DC • T_{DC_BASE} ,T_DC: Integer factor T_{DC_MIN} = T_DC_MIN • T_{DC_BASE} = 4•125 µs = 500 µs T_{DC_MAX} = T_DC_MAX • T_{DC_BASE} = 32•125 µs = 4 ms
T_{CACF}	CACF = 1-14	IO controller application cycle time This is the time frame in which the IO controller application generates new setpoints (e.g. in the position controller cycle). Calculation example: T_{CACF} = CACF• T_DC= 2•500 µs = 1 ms
T_{CA_Valid}	T_{CA_Valid} < T_{DC}	Time, measured from the beginning of the cycle, at which the actual values of all IO devices for the controller application process (position control) are available.
T_{CA_Start}	T_{CA_Start} > T_{CA_Valid}	Time, measured from the beginning of the cycle, at which the controller application process (position control) starts.
T_{IO_BASE}		Time base for T_{IO_Input}, T_{IO_Output} T_{IO_BASE} =T_IO_BASE • 1 ns= 125000 • 1 ns = 125 µs
T_{IO_Input}	T_IO_InputMIN ≤ T_IO_Input < T_DC	Time of actual value acquisition This is the time at which actual values are acquired before a new cycle starts. T_{IO_Input} = T_IO_Input • T_{IO_BASE} T_IO_Input: integer factor
	$T_{IO_InputMIN}$	Minimum value for T_{IO_Input} Calculation: $T_{IO_InputMIN}$ = T_IO_InputMIN • T_{IO_BASE} = 375 µs
T_{IO_Output}	T_IO_Output_valid + T_IO_OutputMIN ≤ T_IO_Output < T_DC	Time of setpoint transfer This is the time, calculated from the beginning of the cycle, at which the transferred setpoints (speed setpoint) are accepted by the closed-loop control system. T_{IO_Output} = T_IO_Output • T_{IO_BASE} T_IO_Output: integer factor
	$T_{IO_OutputMIN}$	Minimum value for T_{IO_Output} Calculation: $T_{IO_OutputMIN}$ = T_IO_OutputMIN • T_{IO_BASE} = 250 µs
	T_IO_Output_valid	The time after which the new control output data (setpoints) are available for the drive object.
Dx		Data_Exchange This service is used to implement user data exchange between the IO controller and IO device 1 - n.
R or Rx		Computation time, current or position controller

Setting criteria for times

- Cycle (T_{DC})
  - T_{DC} must be set to the same value for all bus nodes. T_{DC} is a multiple of SendClock.
  - $T_{DC} > T_{CA_Valid}$ and $T_{DC} \geqq T_{IO_Output}$

    T_{DC} is thus large enough to enable communication with all bus nodes.
- T_{IO_Input} and T_{IO_Output}
  - Setting the times in T_{IO_Input} and T_{IO_Output} to be as short as possible reduces the dead time in the position control loop.
  - $T_{IO_Output} > T_{CA_Valid} + T_{IO_Output_MIN}$
- Settings and optimization can be done via a tool (e.g. HWConfig in SIMATIC S7).

User data integrity

User data integrity is verified in both transfer directions (IO controller <—> IO device) by a sign of life (4-bit counter).

The sign-of-life counters are incremented from 1 to 15 and then start again at 1.

- IO controller sign of life
  - STW2.12 ... STW2.15 are used as the IO controller sign of life.
  - The IO controller sign-of-life counter is incremented in each IO controller application cycle (T_{CACF}).
  - The number of sign-of-life errors tolerated can be set via p0925.
  - p0925 = 65535 deactivates sign-of-life monitoring on the IO device.
  - Monitoring

    The IO controller sign of life is monitored on the IO device and any sign-of-life errors are evaluated accordingly.

    The maximum number of tolerated IO controller sign-of-life errors with no history can be set via p0925.

    If the number of tolerated sign-of-life errors set in p0925 is exceeded, the response is as follows:

    1. A corresponding message is output.
    2. The value zero is output as the IO device sign of life.
    3. A new synchronization with the IO controller sign of life is started.
- IO device sign of life
  - ZSW2.12 ... ZSW2.15 are used as the IO device sign of life.
  - The IO device sign-of-life counter is incremented in each DC cycle (T_{DC}).

9.4.7 PROFINET with 2 controllers

9.4.7.1 Settings for SINAMICS S

SINAMICS S110 permits the simultaneous connection of an automation control (A-CPU) and a Safety control (F-CPU) to a Control Unit via PROFINET.

For this communication, SINAMICS S only supports the standard telegram 30 of the Safety control.

The following diagram shows the essential structure of this connection variant, using CU305-PN as an example.

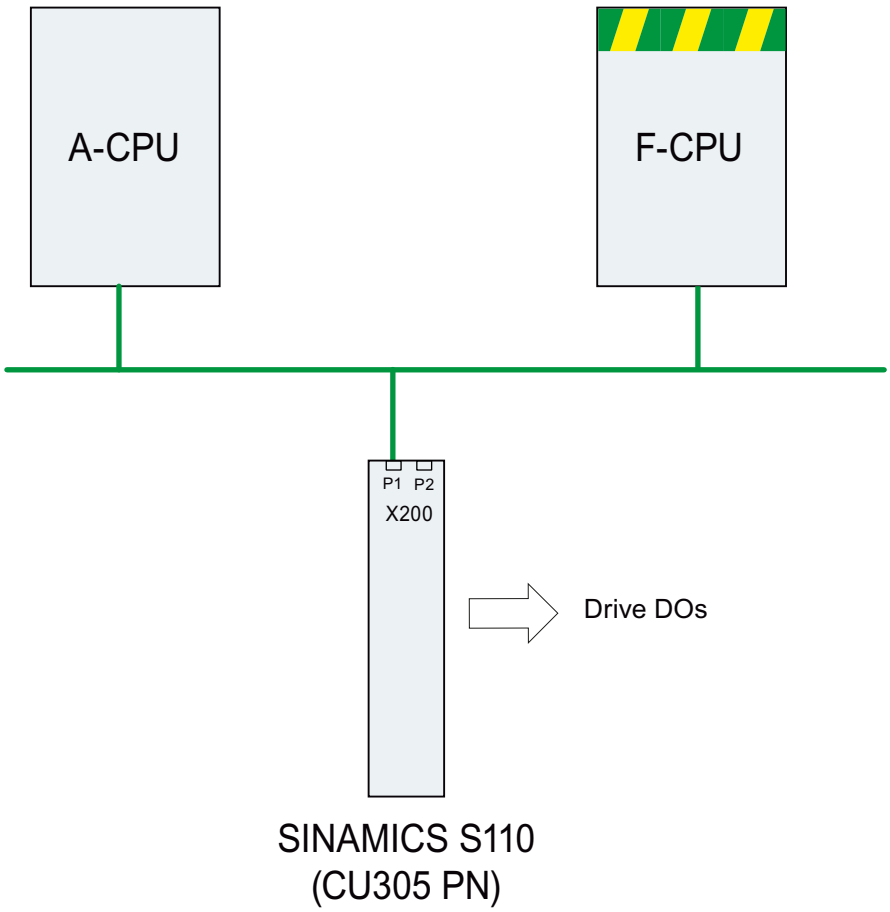

Figure 9-43 PROFINET topology overview

Example

The following diagram shows an example configuration of a SINAMICS S110 with 3 axes. The A-CPU sends the standard telegram 105 and the standard telegram 102. The F-CPU sends two PROFIsafe telegrams 30.

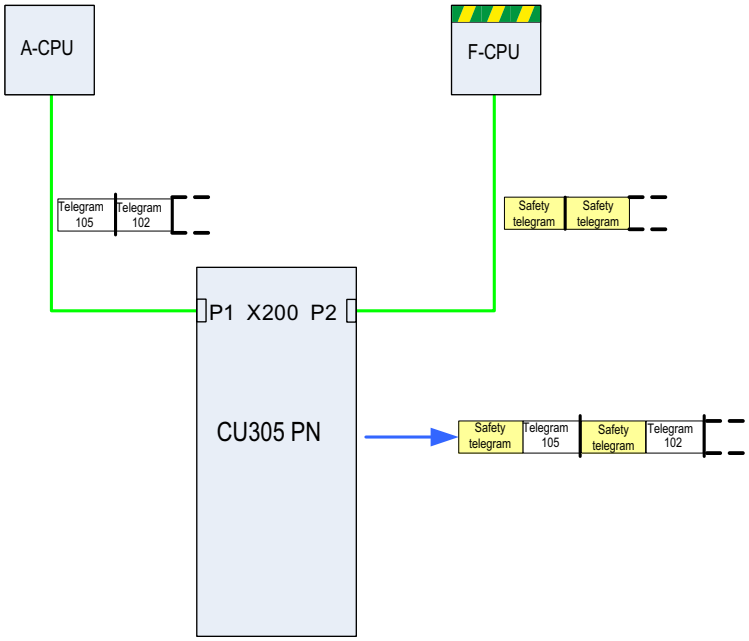

Figure 9-44 Example communication sequence

Configuration

Proceed as follows to configure the connection:

- Use parameter p8929 = 2 to specify that data from 2 controls is to be received via the PROFINET-interface.
- Enable PROFIsafe with parameter p9601.3 = p9801.3 = 1.
- Configure the PROFINET communication in **HW Config** (see section "Configuring the controls").
- When the system is booting, because p8929 = 2, SINAMICS S recognizes that PROFINET telegrams from 2 controls are expected, and structures the communication according to the configuration in **HW Config**.

Note

When booting, SINAMICS S needs the configuration data of the A-CPU first, and then establishes the cyclic communication to this CPU – taking into account the expected PROFIsafe telegrams.

As soon as SINAMICS S has subsequently received the configuration of the F-CPU, cyclic communication is also established here and the PROFIsafe telegrams are taken into account.

⚠ CAUTION

Failure of a CPU

If a CPU fails, communication with the other CPUs is not interrupted. Communication via both channels works independently of each other.

If a CPU fails, communication with the other CPUs continues to function without interruption. Fault messages regarding the failed component are output. Resolve the fault and acknowledge the messages, then communication with the failed CPU will be re-established automatically.

9.4.7.2 Configuring the controls

You have two options for configuring both the controls A-CPU and F-CPU in **HW Config** : Configure

- both controls using the Shared Device function in a common project or
- each control in a separate project.

Note

You can find more detailed information on configuring with **HW Config** in the STEP7 documentation.

Both controls in a common project

- Both controls are in a common project:

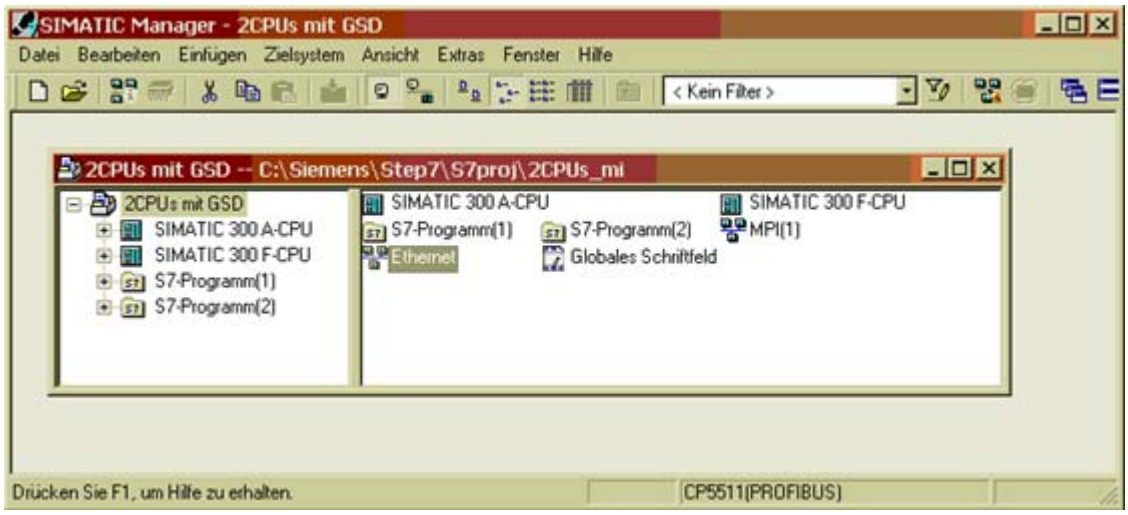

Figure 9-45 Both CPUs in a STEP7 project

- Add the A-CPU to a SINAMICS PROFINET device with GSD. Configure the subslots according to the data to be transmitted.

Note

You yourself must ensure that the configuration of the A-CPU and the F-CPU is appropriate for the desired communication behavior.

- Copy the SINAMICS PROFINET device and add it to the F-CPU as a Shared Device. Configure a drive object without data and then a Servo drive object which only contains the subslot for the PROFIsafe telegram 30.

Each control in a separate project.

- Each control is in a separate project.
- Add the A-CPU to a SINAMICS PROFINET device with GSD. Configure the subslots according to the data to be transmitted.

Note

You yourself must ensure that the configuration of the A-CPU and the F-CPU is appropriate for the desired communication behavior.

- Add the F-CPU to a SINAMICS PROFINET device with GSD.
- Configure a drive object without data and then a Servo drive object which only contains the subslot for the PROFIsafe telegram 30.

9.4.7.3 Overview of important parameters

Overview of important parameters (see SINAMICS S110 List Manual)

- p8929 PN Number of remote controllers
- p9601 SI enable, functions integrated in the drive (CPU 1)
- p9801 SI enable, functions integrated in the drive (CPU 2)

9.5 Communication using USS

9.5.1 Configuring the USS interface

After switching the fieldbus interface to "USS" in STARTER, configure the interface in the **Communication → Fieldbus** dialog.

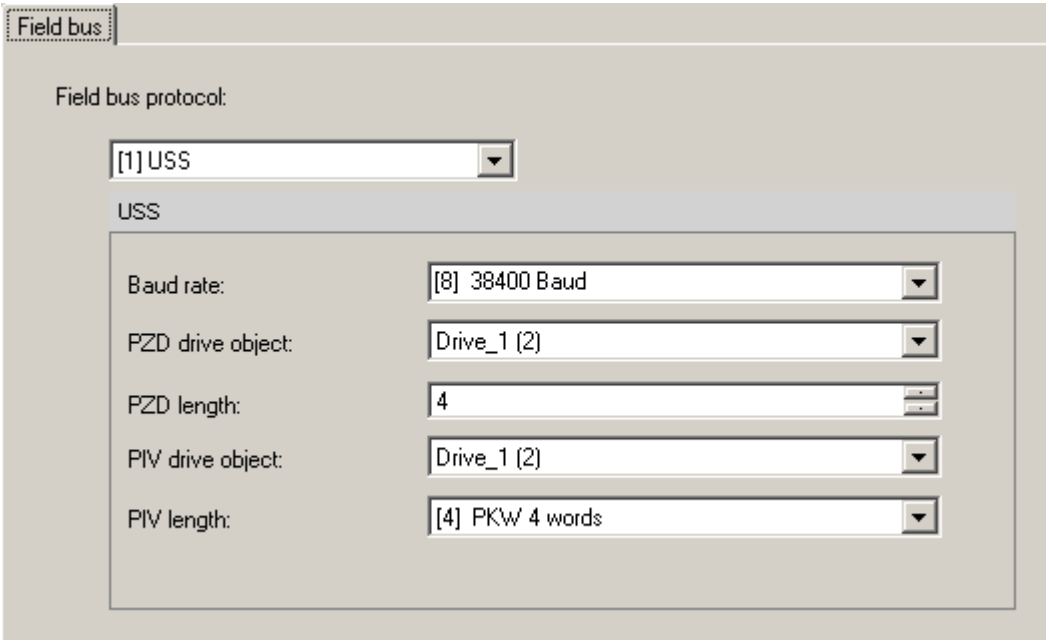

Figure 9-46 USS interface configuration

Set the following parameters here:

- Baud rate
- PZD drive object
- PZD length
- PIV drive object
- PIV length

For details on parameters, please refer to the SINAMICS S110 List Manual.

Overview of important parameters (see SINAMICS S110 List Manual)

- p2020 fieldbus interface baud rate
- p2021 fieldbus interface address
- p2022 fieldbus interface USS PZD number
- p2023 fieldbus interface USS PIV number
- p2030 fieldbus interface protocol selection
- p2035 fieldbus interface USS drive object number

9.5.2 Transferring PZD

Prerequisite

The communications interface must be set to USS protocol.

Defining the process data to be transferred

To define the process data (PZD) to be transferred, proceed as follows:

1. Select **<drive> → Communication** in STARTER.

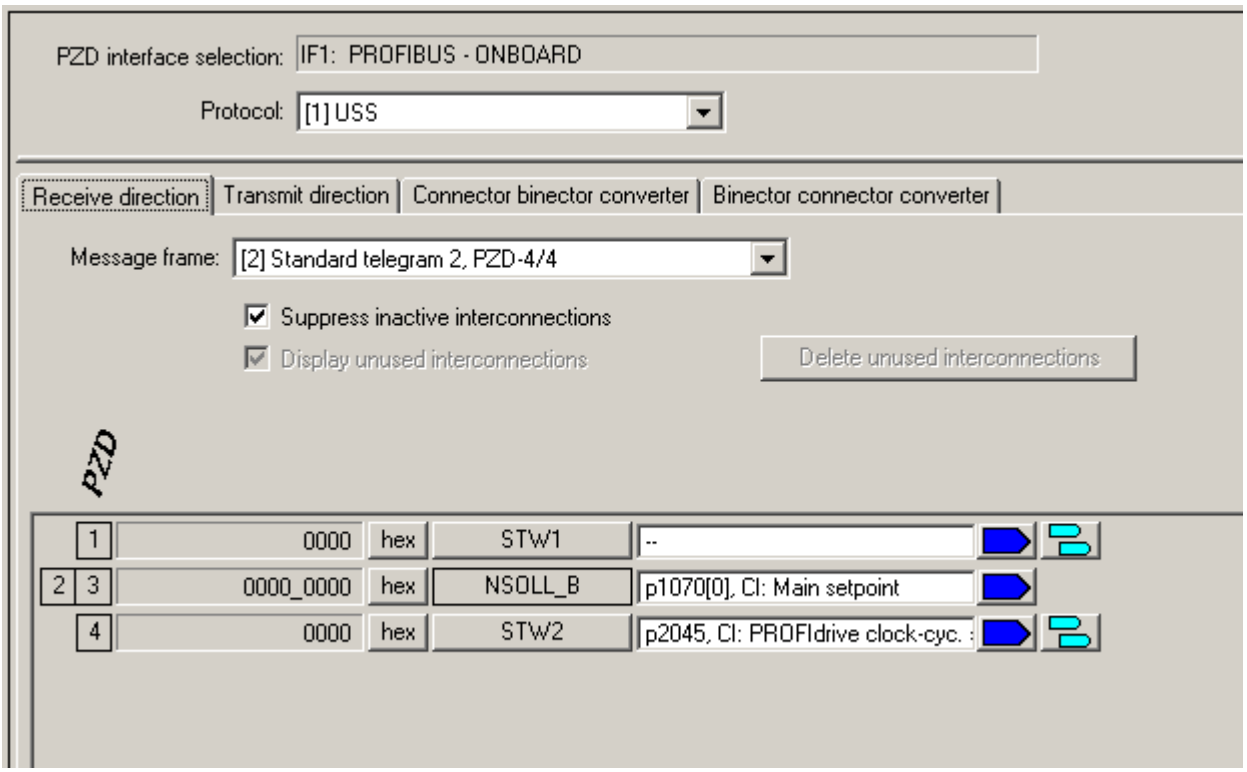

Figure 9-47 USS: Defining the PZD receive direction

2. Define the process data (PZD) you want to receive on the **Receive direction** tab.
3. Define the process data (PZD) you want to send on the **Send direction** tab.

9.5.3 General information about communication with USS over RS485

General information

Communication using the USS protocol takes place over the RS485 interface with a maximum of 31 slaves. The following character frame applies for the USS telegram:

For information about connection, please refer to the Equipment Manual.

9.5.4 Structure of a USS telegram

Description

The structure of a typical USS telegram is shown in the figure below.

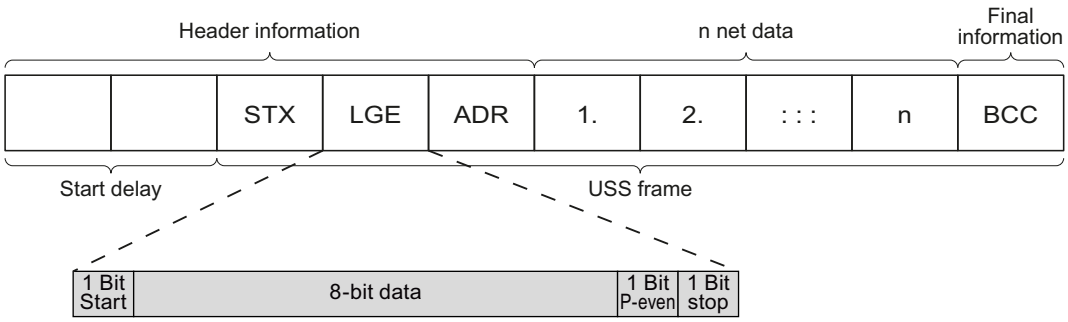

Figure 9-48 Structure of a USS telegram

Telegrams with both a variable and fixed length can be used. This can be selected using parameters p2022 and p2023 to define the length of the PZD and the PKW.

The most common application using a fixed length is shown below:

STX	1 byte	
LGE	1 byte	
ADR	1 byte	
Net data	PKW	8 bytes (4 words: PKE + IND + PWE1 + PWE2)
	PZD	4 bytes (2 words: PZD1 + PZD2)
BCC	1 byte	
Total:	16 bytes (LGE indicates 14 bytes, because STX and LGE were not counted in LGE)	

Start delay

The duration of the start delay must at least be as long as the time for two characters and depends on the baud rate.

Table 9- 44 Duration of the start delay

Baud rate in bits/s	Transmission time per character (= 11 bits)	Transmission time per bit	Min. start delay
9600	1.146 ms	104.170 µs	> 2.291 ms
19200	0.573 ms	52.084 µs	> 1.146 ms
38400	0.286 ms	26.042 µs	> 0.573 ms
57600	0.191 ms	17.361 µs	> 0.382 ms
115200	0.059 ms	5.340 µs	> 0.117 ms

Note: The time between two characters must be shorter than the start delay.

STX

The STX block is a single-byte ASCII STX character (0x02) and indicates the beginning of the message.

LGE

LGE is a single-byte block and specifies the number of bytes that follow in the telegram. It is defined as the sum of

- User data characters (quantity n)
- Address byte (ADR)
- Block check character (BCC)

The actual overall telegram is, of course, two bytes longer because STX and LGE are not counted in LGE.

ADR

The ADR range is a single byte which contains the address of the slave node (e.g. inverter). The individual bits in the address byte are addressed as follows:

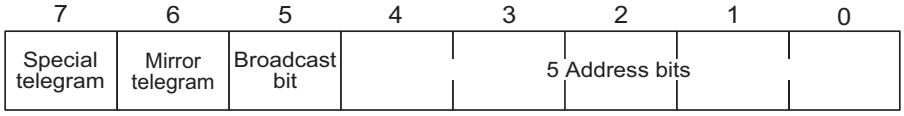

- Bit 5 is the broadcast bit.

  Note

  The Broadcast function is not supported in the current software version.

- Bit 6 = 1 indicates a mirror telegram.
  The node address is evaluated and the addressed slave returns the telegram to the master unchanged.

Bit 5 = 0, bit 6 = 0 and bit 7 = 0 indicate normal data communication for devices. The node address (bit 0 to bit 4) is evaluated.

BCC

BCC stands for Block Check Character. It is an exclusive OR checksum (XOR) over all telegram bytes with the exception of the BCC itself.

9.5.5 User data range of the USS telegram

Basic parameters for communication with USS protocol via the RS485 interface

p2020	Fieldbus interface baud rate: 2400 … 187500 baud
p2021	Fieldbus interface address: 0 … 30
p2022	Fieldbus interface USS PZD number: 0 … 2 … 16 words
p2023	Fieldbus interface USS PIV number: [0 no PKW component, 3 (3 words), 4 (4 words), 127 (variable length)]
p2029	Fieldbus interface error statistics: 0 ... 7 ()
p2030	Fieldbus interface protocol selection: (0 no protocol, 1 USS, 2 PROFIBUS)
p2035	Fieldbus interface USS PIV Drive object number
p2040	Fieldbus interface monitoring time: 0 … 65535 ms. 0 = no monitoring
r2050	CO: IF1 PROFIdrive PZD receive word
p2051	CI: IF1 PROFIdrive PZD send word
r2053	IF1 PROFIdrive diagnostics PZD send word
p2080 … p2089	BI: Binector-connector converter, status word x
r2090 … r2099	BO: IF1 PROFIdrive PZD1 receive bit-serial

Structure of the user data

The user data range of the USS protocol is used to transmit application data. This comprises the parameter channel data and the process data (PZD).

The user data occupy the bytes within the USS frame (STX, LGE, ADR, BCC). The size of the user data can be configured using parameters p2023 and p2022. The structure and sequence of the parameter channel and process data (PZD) are shown in the figure below.

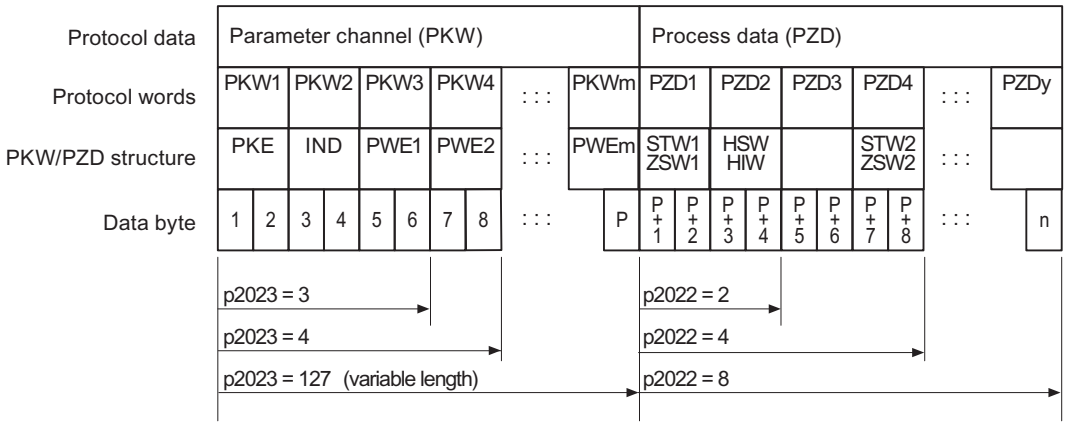

Figure 9-49 USS user data structure

The length for the parameter channel is determined by parameter p2023 and the length for the process data is specified by parameter p2022. If neither the parameter channel nor the PZD are required, the relevant parameters can be set to zero ("PKW only" or "PZD only").

It is not possible to transfer "PKW only" and "PZD only" alternatively. If both channels are required, they must be transferred together.

9.5.6 Data structure of the USS parameter channel

Description

The USS protocol defines for inverters the user data structure via which a master can access the slave inverter. The parameter channel can be used to monitor and change any parameters in the inverter.

Parameter channel

Process data can be edited and monitored (written/read) via the parameter channel, as described below. The parameter channel can be set to a fixed length of 3 or 4 data words or to a variable length.

The first data word always contains the parameter identifier (PKE) and the second contains the parameter index.

The third, fourth and subsequent data words contain parameter values, texts and descriptions.

Parameter identifier (PKE), first word

The parameter identifier (PKE) is always a 16-bit value.

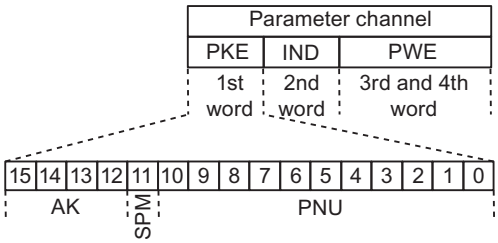

Figure 9-50 PKE structure

- Bits 0 to 10 (PNU) contain the remainder of the parameter number (value range 1 to 61999).

For parameter numbers ≥ 2000, an offset must be added that is defined using the upper bits of the IND byte.

- Bit 11 (SPM) is reserved and always = 0.
- Bits 12 to 15 (AK) contain the request or response identifier.

The significance of the request identifier for request telegrams (master → inverter) is described in the following table.

Table 9- 45 Request identifier (master → inverter)

Request identifier	Description	Response identifier	
		Positive	Negative
0	No request	0	7
1	Request parameter value	1 / 2	7
2	Change parameter value (word)	1	7
3	Change parameter value (double word)	2	7
4	Request descriptive element [1]	3	7
6	Request parameter value [1] [2]	4 / 5	7
7	Change parameter value (word) [1] [2]	4	7
8	Change parameter value (double word) [1] [2]	5	7
1) The required element of the parameter description is specified in IND (second word). 2) Identifier 1 is identical to identifier 6, ID 2 is identical to 7, and 3 is identical to 8. We recommend that you use identifiers 6, 7, and 8.			

The significance of the response identifier for response telegrams (inverter → master) is described in the following table. The request identifier determines which response identifiers are possible.

Table 9- 46 Response identifier (inverter → master)

Response identifier	Description
0	No response
1	Transfer parameter value (word)
2	Transfer parameter value (double word)
3	Transfer descriptive element 1)
4	Transfer parameter value (field, word) 2)
5	Transfer parameter value (field, double word) 2)
6	Transfer number of field elements
7	Request cannot be processed, task cannot be performed (with error number)
1) The required element of the parameter description is specified in IND (second word). 2) The required element of the indexed parameter is specified in IND (second word).	

If the response identifier is 7 (request cannot be processed), one of the error numbers listed in the following table will be saved in parameter value 2 (PWE2).

Table 9- 47 Error numbers for the response "Request cannot be processed"

No.	Description	Remarks
0	Impermissible parameter number (PNU)	Parameter does not exist
1	Parameter value cannot be changed	The parameter can only be read
2	Minimum/maximum not achieved or exceeded	–
3	Wrong subindex	–
4	No field	An individual parameter was addressed with a field request and subindex > 0
5	Wrong parameter type / wrong data type	Confusion of word and double word
6	Setting is not permitted (only resetting)	Index is outside the parameter field[]
7	The descriptive element cannot be changed	Description cannot be changed
11	Not in "master control" mode	Change request without "master control" mode (see p0927)
12	Keyword missing	–
17	Request cannot be processed on account of the operating state	The current inverter status is not compatible with the received request
101	Parameter number is currently deactivated	Dependent on the operating mode of the inverter
102	Channel width is insufficient	Communication channel is too small for response
104	Illegal parameter value	The parameter can only assume certain values
106	Request not included / task is not supported	After request identifier 5,11,12,13,14,15
200/201	Changed minimum/maximum not achieved or exceeded	The maximum or minimum can be limited further during operation
204	The available access authorization does not cover parameter changes	–

Parameter index (IND) second word

The field subindex is simply referred to as "subindex" in the PROFIdrive profile.

Data transfer structure

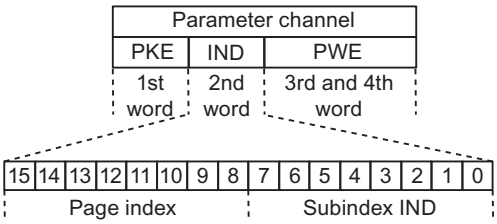

Figure 9-51 IND structure

- The field subindex is an 8-bit value that is transferred in the low-value byte (bits 0 to 7) of the parameter index (IND).
- The task of selecting parameter pages for additional parameters is performed in this case by the higher-value byte (bits 8 to 15) of the parameter index. This structure meets the requirements of the USS specification.

  Example: Coding a parameter number in PKE and IND for "p2029, Index 5"

PKE		IND		PWE1		PWE2	
xx	1D	80	05				

Rules for the parameter range

The bit for selecting the parameter page functions as follows:

When it is set to 1, an offset of 2000 is applied in the inverter to the parameter number (PNU) in the parameter channel request before transfer.

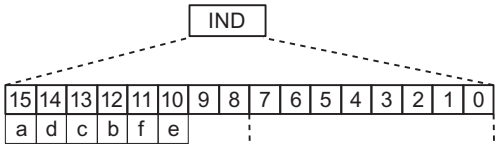

Figure 9-52 IND page index

Table 9- 48 Rules for setting PNU

Parameter range	Page index						Bit		Hex value	+ PNU
	a	d	c	b	f	e	9	8		
0000 … 1999	0	0	0	0	0	0	0	0	0x00	0 – 7CF
2000 … 3999	1	0	0	0	0	0	0	0	0x80	0 – 7CF
4000 … 5999	0	0	0	1	0	0	0	0	0x10	0 – 7CF
6000 … 7999	1	0	0	1	0	0	0	0	0x90	0 – 7CF
8000 … 9999	0	0	1	0	0	0	0	0	0x20	0 – 7CF
…	…	…	…	…	…	…	…	…	…	…
32,000 … 33,999	0	0	0	0	0	1	0	0	0x04	0 – 7CF
…	…	…	…	…	…	…	…	…	…	…
64,000 … 65,999	0	0	0	0	1	0	0	0	0x08	0 – 7CF

Table 9- 49 Coding example for a parameter number in PKE and IND for p2029, index 5

	PKE		IND	
Decimal	xx	29	128	05
Hex	xx	1D	80	05

Parameter value (PWE)

With communication over USS, the number of PWEs can vary. One PWE is required for 16-bit values. Two PWEs are required if 32-bit values are exchanged.

Note

U8 data types are transferred as U16 with the upper byte set to zero. U8 fields therefore require one PWE per index.

A parameter channel of 3 words represents a typical data telegram for exchanging 16-bit data or alarms. The mode with a fixed word length of 3 is used when p2023 = 3.

A parameter channel for 4 words is a typical data telegram for exchanging 32-bit data variables and requires p2023 = 4.

A parameter channel with a variable length is used with p2023 = 127. The telegram length between the master and slave can vary in terms of the number of PWEs.

When the length of the parameter channel is fixed (p2023 = 3 or 4), the master must always send either 3 or 4 words in the parameter channel accordingly. Otherwise the slave will not respond to the telegram. The response of the slave will also comprise 3 or 4 words. For a fixed length, 4 should be used because 3 is insufficient for many parameters (i.e. double words). For a variable length of parameter channel (p2023 = 127), the master will only send the number of words necessary for the task in the parameter channel. The response telegram is also no longer than necessary.

Rules for editing requests/responses

- A request or a response can only be referred to one parameter.
- The master must constantly repeat a request until it receives a suitable response.
- The master recognizes the response to a request that it sent by:
  - Evaluating the response identifier
  - Evaluating the parameter number (PNU)
  - Evaluating the parameter index (IND), if necessary, or
  - Evaluating the parameter value PWE, if necessary.
- The complete request must be sent in a telegram. Request telegrams cannot be subdivided. The same applies to responses.
- If response telegrams contain parameter values, the drive always returns the current parameter value when it repeats response telegrams.

9.5.7 Time-out and other errors

Telegram timeouts

The character runtime is important for timeout monitoring:

Table 9- 50 Character runtime

Baud rate in bits/s	Transmission time per character (= 11 bits)	Transmission time per bit	Character runtime
9600	1.146 ms	104.170 µs	1.146 ms
19200	0.573 ms	52.084 µs	0.573 ms
38400	0.286 ms	26.042 µs	0.286 ms
115200	0.059 ms	5.340 µs	0.059 ms

The figure below shows the meaning of "Residual runtime":

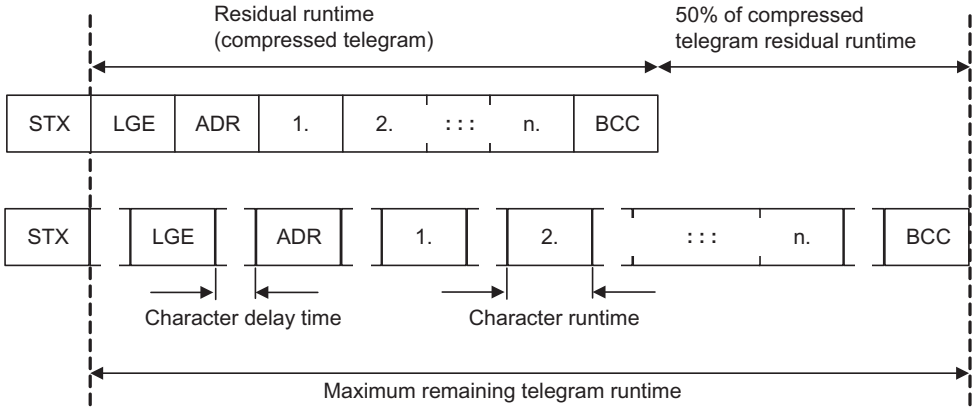

Figure 9-53 Residual runtime and character delay time

The character delay time can be zero, but it must always be lower than the start delay time.

The figure below shows the different delay times and transmission times:

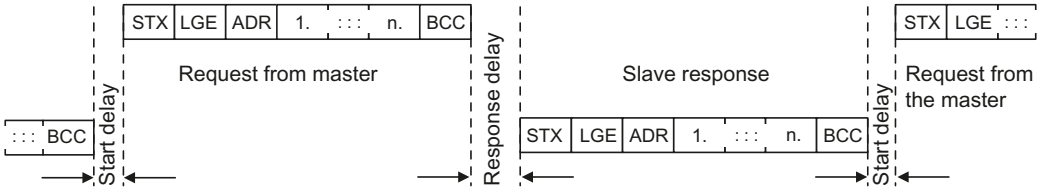

Figure 9-54 Start delay and response delay

Character delay time	Off time between characters; must be less than 2x character runtime, but can also be zero
Start delay	Off time between USS messages; must be > 2 * character runtime.
Response delay	Processing time of the slave; must be < 20 ms, but larger than the start delay.
Residual runtime	< 1.5 * (n + 3) * character runtime (whereby n = number of data bytes)
"Slave transfer"/ "Master transfer"	Sum of "Start delay", "Response delay" and "Residual runtime"

The master must check the following times:

- "Response delay" Response time of the slave to a USS request
- "Residual runtime" Transmission time of the response telegram sent from the slave

The slave must check the following times:

- "Start delay" Off time between USS messages
- "Residual runtime" Transmission time for a request telegram coming from the master

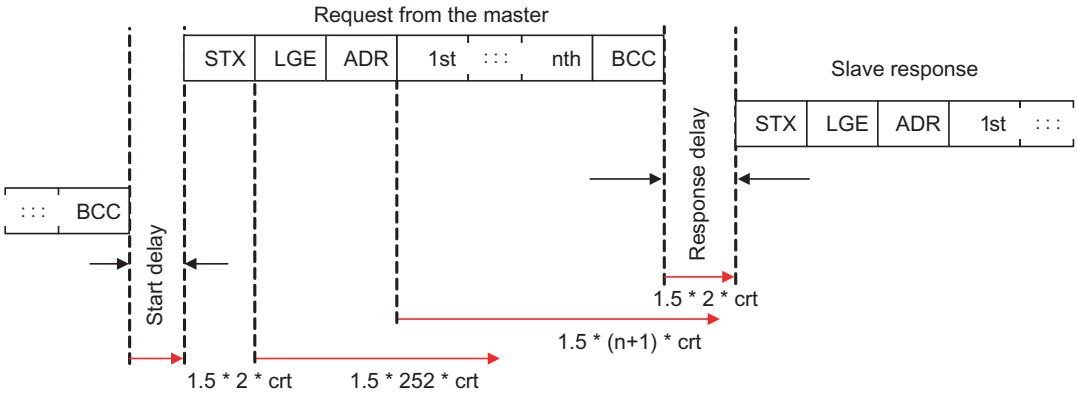

Figure 9-55 Timeout checks on the USS slave

The figure above shows the timeout ranges that have been verified on the USS slave. "crt" means "Character run time". The maximum range is a factor of 1.5. "Start delay" and minimum "Response delay" are values that are predefined in the software. The "Residual runtimes" monitor values that can cause a timeout if they are exceeded on the receipt of characters.

Process timeouts

Parameter p2040 determines the monitoring time for the received process data via the fieldbus interface in ms. If no process data is received within this time, message F01910 is output.

Monitoring is switched off if p2040 = 0.

9.5.8 USS process data channel (PZD)

Description

In this area of the telegram, process data (PZD) is continuously exchanged between the master and slave. Depending on the direction of transmission, the process data channel contains either request data for the USS slave or response data for the USS master. The request contains control words and setpoints for the slaves and the response contains status words and actual values for the master.

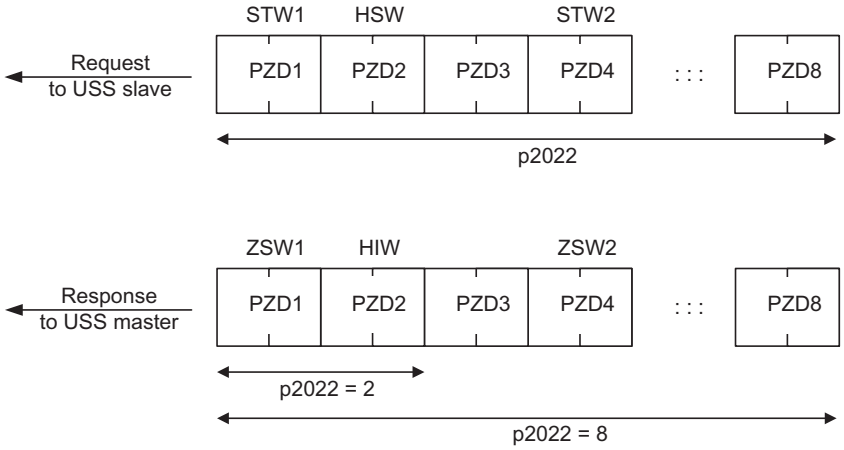

Figure 9-56 Process data channel

The number of PZD words in a USS telegram is defined by parameter p2022. The first two words are:

- Control word 1 (STW1) and main setpoint (HSW)
- Status word 1 (ZSW1) and main setpoint (HIW)

If P2022 is greater than or the same as 4, the additional control word (STW2) is transferred as the fourth PZD word (default setting).

The sources of all other PZD are defined by parameter p2051 for an RS485 interface.

Basic information about the drive system 10

10.1 Parameter

Parameter types

The following adjustable and display parameters are available:

- Adjustable parameters (write/read)

  These parameters have a direct impact on the behavior of a function.

  Example: Ramp-up and ramp-down time of a ramp-function generator

- Display parameters (read only)

  These parameters are used to display internal variables.

  Example: Current motor current

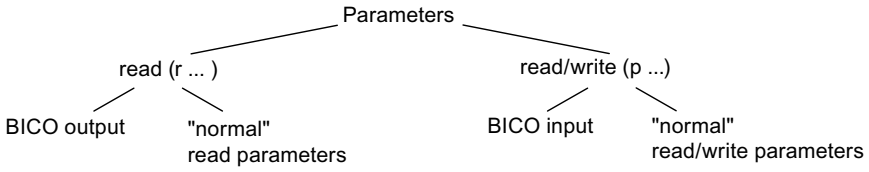

Figure 10-1 Parameter types

All these drive parameters can be read and changed via PROFIBUS using the mechanisms defined in the PROFIdrive profile.

Parameter categories

The parameters of the individual drive objects are categorized into data sets as follows:

- Data-set-independent parameters

  These parameters exist only once per drive object.

- Data-set-dependent parameters

  These parameters can exist a multiple number of times for each drive object and can be addressed via the parameter index for reading and writing. A distinction is made between various types of data set:

  – CDS: Command Data Set

    By parameterizing several command data sets and switching between them, the drive can be operated with different pre-configured signal sources.

  – DDS: Drive Data Set

    The drive data set contains the parameters for switching between different drive control configurations.

The CDS and DDS can be switched over during normal operation. Further types of data set also exist, however these can only be activated indirectly by means of a DDS changeover.

- EDS Encoder Data Set
- MDS Motor Data Set

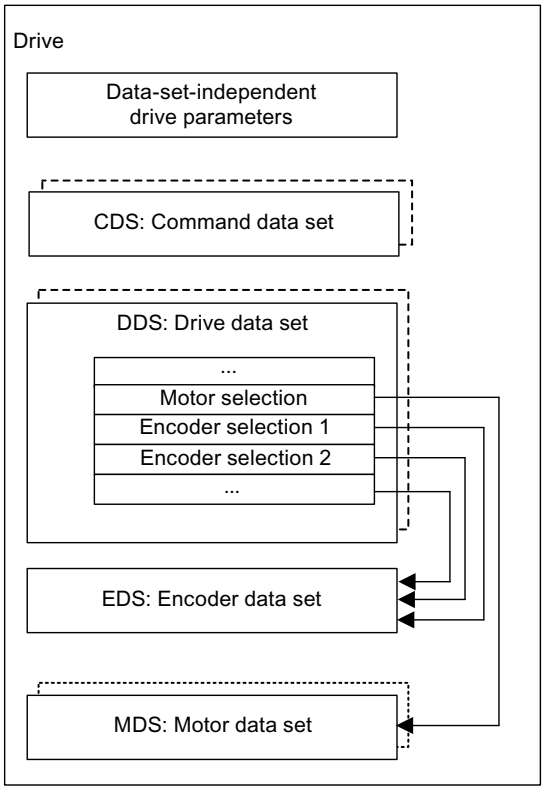

Figure 10-2 Parameter categories

Saving parameters in a non-volatile memory

The modified parameter values are stored in the volatile RAM. When the drive system is switched off, this data is lost.

So that the changes can be restored, the data must be saved as follows in a non-volatile manner in the Control Unit.

- Save parameters - device and drive

  p0977 = 1; automatically reset to 0

- Save the parameters with STARTER

  See "Copy RAM to ROM" function

NOTICE
The power supply to the Control Unit may first be switched off after saving has finished (i.e. after saving has started, wait until it has finished and parameter p0977 has the value 0 once more).

Resetting parameters

The parameters can be reset to the factory setting as follows:

- Reset parameters - current drive object

  p0970 = 1; automatically reset to 0

- Reset parameters - all parameters drive object "Control Unit"

  p0009 = 30 parameter reset

  p0976 = 1; automatically reset to 0

Access level

The parameters are subdivided into access levels. The SINAMICS S110 List Manual specifies the access level at which the parameter can be displayed and modified. The required access levels 0 to 4 can be set in p0003.

Table 10- 1 Access levels

Access level	Remark
0 User-defined	Parameter from the user-defined list
1 Standard	Parameters for the simplest operator functions (e.g. p1120 = ramp-function generator ramp-up time).
2 Extended	Parameters to handle the basic functions of the device.
3 Expert	Expert knowledge is already required for this parameter (e.g. knowledge about BICO parameterization).
4 Service	Please contact your local Siemens office for the password for parameters with access level 4 (Service). It must be entered into p3950.

Note

Parameter p0003 is only available on the drive object Control Unit.

10.2 Data sets

10.2.1 CDS: Command Data Set

CDS: Command Data Set

The BICO parameters (binector and connector inputs) are grouped together in a command data set. These parameters are used to interconnect the signal sources of a drive.

By parameterizing several command data sets and switching between them, the drive can be operated with different pre-configured signal sources.

A command data set contains the following (examples):

- Binector inputs for control commands (digital signals)
  - ON/OFF, enable signals (p0844, etc.)
  - Jog (p1055, etc.)
- Connector inputs for setpoints (analog signals)
  - CI: Speed controller speed setpoint 1 (p1155)
  - Torque limits and scaling factors (p1522, p1523, p1528, p1529)

SINAMICS S110 can manage 2 command data sets.

The following parameters are available for selecting command data sets and for displaying the currently selected command data set:

The binector input p0810 is used to select a command data set.

- p0810 BI: Command data set selection CDS bit 0

If a command data set that does not exist is selected, the current data set remains active. The selected data set is displayed using parameter (r0836).

Example: Changeover between command data set 0 and 1

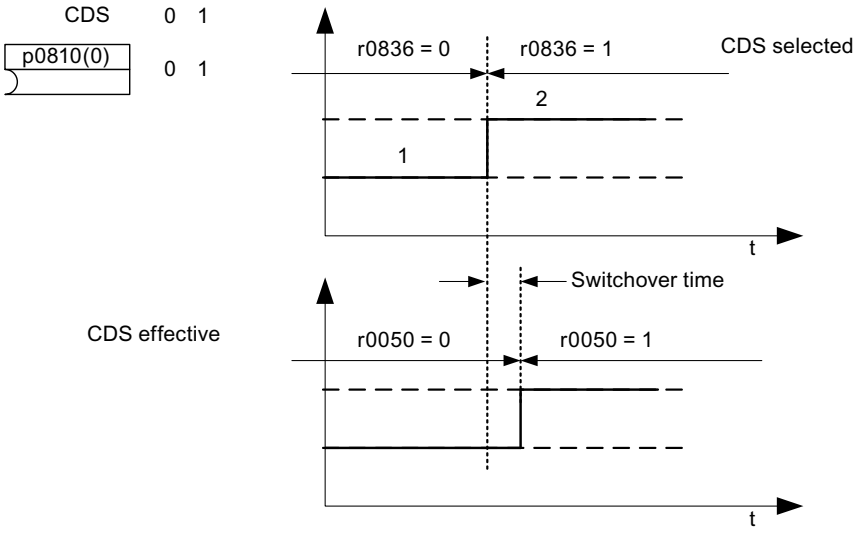

Figure 10-3 Switching the command data set (example)

10.2.2 DDS: Drive Data Set

DDS: Drive Data Set

A drive data set contains various adjustable parameters that are relevant with respect to open and closed-loop drive control:

- Numbers of the assigned motor and encoder data sets:
  - p0186: Assigned motor data set (MDS)
  - p0187: Assigned encoder data set (EDS)
  - p0188: Assigned encoder data set (EDS; for the external encoder)
- Various control parameters, e.g.:
  - Fixed speed setpoints (p1001 to p1004)
  - Speed limits min./max. (p1080, p1082)
  - Characteristic data of ramp-function generator (p1120 ff)
  - Characteristic data of controller (p1240 ff)
  - ...

The parameters that are grouped in the drive data set are identified in the SINAMICS S110 List Manual by "Data Set DDS" and are assigned an index [0...n].

SINAMICS S110 can manage up to 2 drive data sets. The number of drive data sets is configured with p0180. The parameters of the drive data sets are switched with an index. This simplifies the selection between the drive configurations (control type, motor, encoder); for example, you can switch drive data sets to change between an SMI motor and a second motor whose encoder is connected via encoder interface X23.

The binector input p0820 is used to select a drive data set.

- p0820 BI: Drive data set selection DDS, bit 0

If the DDS is switched over, the EDS and MDS are automatically switched over with it.

10.2.3 EDS: Encoder Data Set

EDS: Encoder Data Set

An encoder data set contains various adjustable parameters describing the connected encoder for the purpose of configuring the drive.

- Adjustable parameters, e.g.:
  - Encoder interface component number (p0141)
  - Encoder component number (p0142)
  - Encoder type selection (p0400)

The parameters grouped together in the encoder data set are identified in column D (data set) of the expert list by the letter "E" and assigned the index [0].

SINAMICS S110 only supports one encoder, which is assigned via parameter p0187 (encoder 1: motor encoder) or p0188 (encoder 2: external encoder) to a drive data set. Only one of the two encoders can be used at a time.

With SINAMICS S110, the only possible change is between encoder data set 0 and "encoderless".

10.2.4 MDS: Motor Data Set

MDS: Motor Data Set

A motor data set contains various adjustable parameters describing a connected motor for the purpose of configuring the drive. It also contains certain display parameters with calculated data.

- Adjustable parameters, e.g.:
  - Motor component number (p0131)
  - Motor type selection (p0300)
  - Rated motor data (p0304 ff)
  - ...
- Display parameters, e.g.:
  - Calculated rated data (p0330 ff)
  - ...

The parameters that are grouped in the motor data set are identified in the SINAMICS S110 List Manual by "Data Set MDS" and are assigned an index [0...n].

The motor data set is assigned to a drive data set via parameter p0186.

A motor data set can only be changed using a DDS changeover. The motor data set changeover is, for example, used for:

- Switching over different motors
- Switching over different windings in a motor (e.g. star-delta changeover)
- Adapting the motor data

SINAMICS S110 can manage up to 2 motor data sets. The number of motor data sets in p0130 must not exceed the number of drive data sets in p0180.

10.2.5 Integration

Function diagrams (see SINAMICS S110 List Manual)

- 8560 Command Data Sets (CDS)
- 8565 Drive Data Sets (DDS)
- 8575 Motor Data Sets (MDS)
- 8580 Power unit Data Set, PDS

Overview of important parameters (see SINAMICS S110 List Manual)

Adjustable parameters

- p0130 Motor data sets (MDS) number
- p0139 Copy motor data set (MDS)
- p0140 Encoder data sets (EDS) number
- p0180 Drive data sets (DDS) number
- p0186 Motor data set (MDS) number
- p0187 Encoder 1 encoder data set number
- p0188 Encoder 2 encoder data set number
- p0809 Copy command data set (CDS)
- p0810 BI: Command data set selection CDS bit 0
- p0819[0...2] Copy drive data set DDS
- p0820 BI: Drive data set selection DDS, bit 0

10.2.6 Using data sets

Copying a command data set

Set parameter p0809 as follows:

1. p0809[0] = number of the command data set to be copied (source)
2. p0809[1] = number of the command data to which the data is to be copied (target)
3. p0809[2] = 1

Start copying.

Copying is finished when p0809[2] = 0.

Note

In STARTER, you can copy the command data sets (Drive → Configuration → "Command data sets" tab).

You can select the displayed command data set in the relevant STARTER screens.

Copying a drive data set

Set parameter p0819 as follows:

1. p0819[0] = Number of the drive data set to be copied (source)
2. p0819[1] = Number of the drive data set to which the data is to be copied (target)
3. p0819[2] = 1

Start copying.

Copying is finished when p0819[2] = 0.

Note

In STARTER, you can copy the drive data sets (Drive → Configuration → "Drive data sets" tab).

You can select the displayed drive data set in the relevant STARTER screens.

Copying the motor data set

Set parameter p0139 as follows:

1. p0139[0] = Number of the motor data set that is to be copied (source)
2. p0139[1] = Number of the motor data set which should be copied into (target)
3. p0139[2] = 1

Start copying.

Copying has been completed, if p0139[2] = 0.

Note

In STARTER, you can set the drive data sets via the drive configuration.

Uncommissioned data sets

Drive commissioning can be completed even if non-commissioned data sets (EDS, MDS, DDS) are available.

Uncommissioned data sets are marked as "uncommissioned".

The attributes are displayed in STARTER or in the expert list or OPs.

Activation of these data sets is not permitted and will be rejected with an error. Assigning these data sets to a drive data set (DDS) is only possible with a commissioning step (p0009 ≠ 0, p0010 ≠0).

Note

If there is no DDS with the attribute "commissioned", the assigned drive axis remains in the controller inhibit.

10.3 Working with the memory card

This chapter describes the basic functions of the memory card for SINAMICS S110.

⚠ CAUTION

Switching on the CU305 with the memory card inserted

Depending on the data on the inserted memory card and the CU305, SINAMICS S110 performs certain actions automatically when the system is switched on (see the descriptions below). Please note the information in these descriptions, as operator errors may lead to data loss or an incorrect drive response.

If you want to upgrade a number of differently parameterized devices, please use one card to back up the parameters and another for the firmware update. We only recommend saving firmware and parameters to the same memory card for the purpose of spare part installation.

Basics:

The CU305, the SINAMICS S110 Control Unit, manages three memory areas:

1. A volatile memory, the RAM, also called working memory.
2. A non-volatile memory, the ROM, also called Flash memory.
3. An optionally available portable memory card. The CU305 only accepts memory cards which have been prepared for SINAMICS S110 by Siemens.

During operation, SINAMICS S110 uses the work memory. It is here that all project data and application programs for operation are stored.

To save the current data from the work memory, you must copy it to non-volatile memory **before** shutting down. More detailed information appears in "RAM to ROM" in the commissioning section of this manual.

An optional memory card is used to save a variety of parameter data sets and transfer them to other S110 systems in order to install firmware updates or carry out series commissioning. A memory card is absolutely essential if you wish to use the Extended Functions supported by Safety Integrated.

Parameter data sets

Parameter data sets combine all the parameters for a project, including the project itself. Parameter data sets differ on the basis of drive configuration (power unit, motor, encoder, etc. used) and application (e.g. function modules, type of control).

Up to two parameter data sets with the indices 0 and 10 can be saved in the ROM.

Up to 101 parameter data sets (indices 0, ..., 100) can be saved on the memory card.

Parameter data sets can be loaded or copied from the memory card to the ROM.

The parameter data set active in the RAM has the index 0.

10.3.1 Using parameter data sets

Parameter backup

There are several ways of copying parameter data sets from non-volatile memory to the memory card:

- Automatic backup of parameters to the memory card when the system is switched off/on:

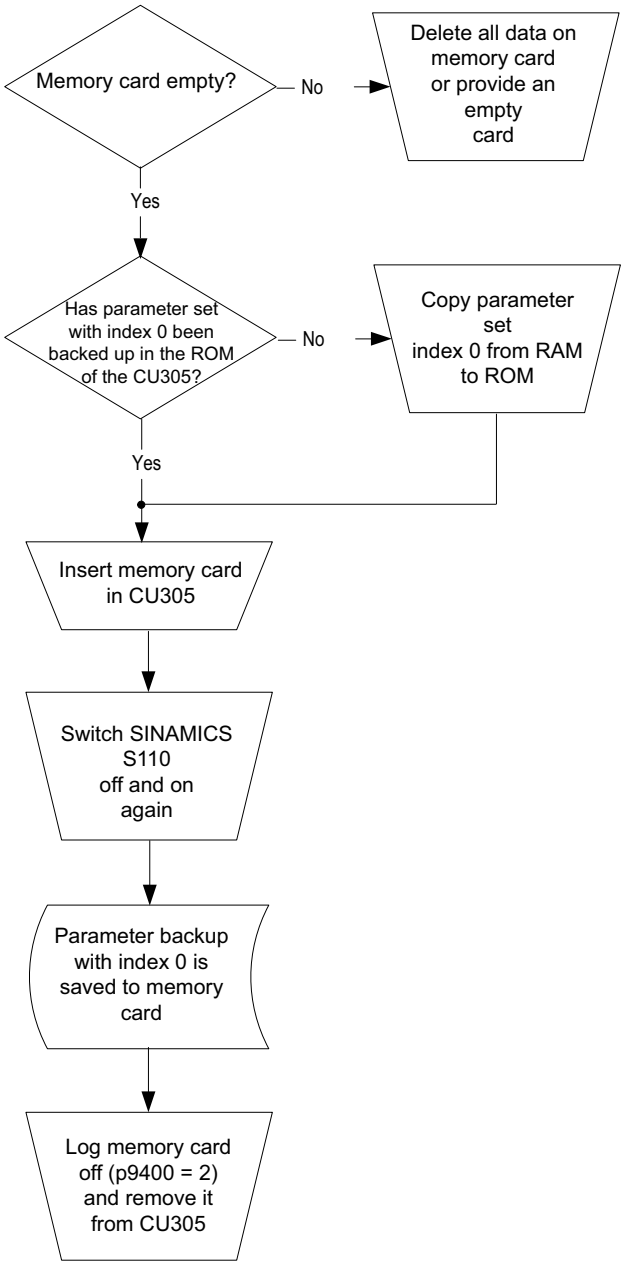

Figure 10-4 Parameter backup

Alternatively, you can back up parameter sets without switching the CU305 off/on as follows:

- The system is switched on:
  - Insert a memory card into the CU305.
  - Execute command "RAM to ROM" (p0977 = 1). The up-to-date parameter data set is copied automatically, first to the "ROM" and then to the memory card (in the latter case as a data set with the index 0). If the memory card already contains a parameter data set with the index 0, this will be overwritten without a prompt appearing.
- The system is switched on:

  The user starts data transmission from the ROM to the memory card with parameters p0802, p0803 and p0804:
  - p0802 = (0...100) as target (to the memory card), p0803 = (0/10/11/12) as source (from the "ROM"), and p0804 = 1.

Note

RAM to ROM transfer will overwrite the content of an inserted memory card.

When a memory card is inserted, the RAM to ROM command (p0977[1]) will copy the parameter data set with the index 0 from the ROM to the memory card. Any parameter data set previously saved to index 0 will be overwritten.

Series commissioning (copying parameter sets)

There are several ways of copying parameter data sets from the memory card to non-volatile memory:

⚠ CAUTION

The parameter data set in the "ROM" is overwritten during system start-up.

Parameters already backed up to the CU305 with the setting 0 will be overwritten during the following process!

- Automatic copying of the parameter data set with index 0 from the memory card when the system is switched off/on:

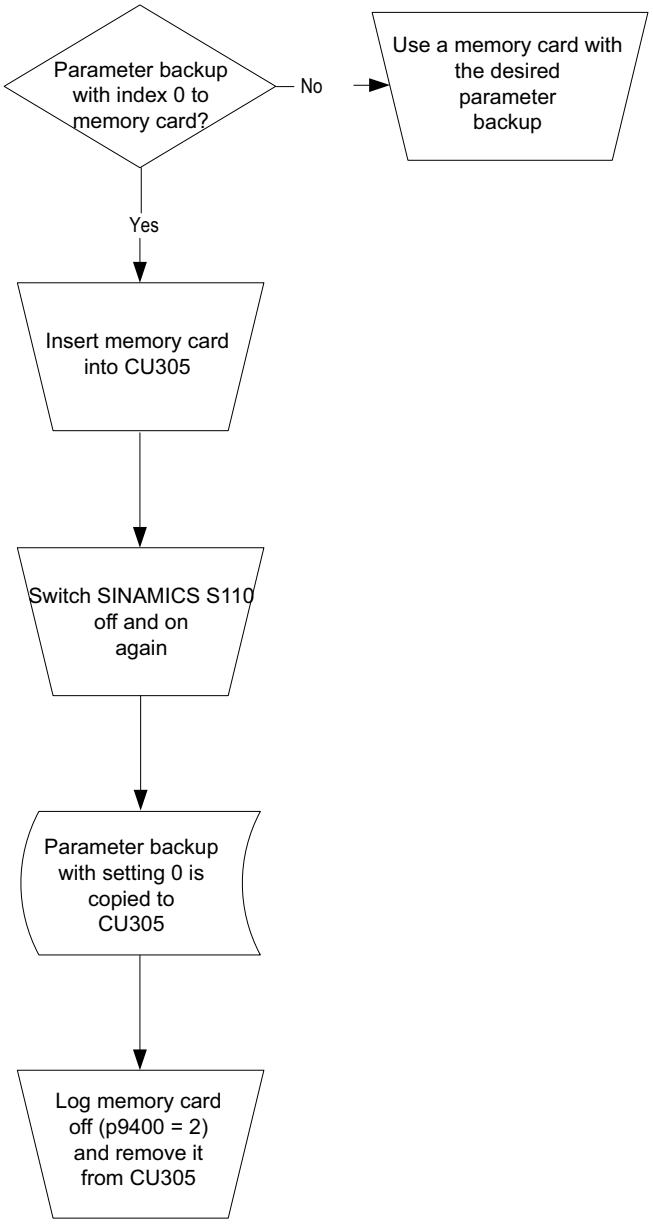

Figure 10-5 Series commissioning

Alternatively, you can copy parameter sets from the memory card to the CU305 without switching the CU305 off/on as follows:

- The system is switched on. The user starts data transmission from the memory card to the ROM with parameters p0802, p0803 and p0804:
  - p0802 = (0...100) as source (from the memory card), p0803 = (0/10/11/12) as target (to the "ROM"), and p0804 = 2.

Note

Saving/loading all parameters via p0976 and p0977:

You can save or reload all parameters via parameters p0976 and p0977. For more details, refer to the parameter description in the SINAMICS S110 List Manual.

10.3.2 Working with firmware versions

Firmware update/downgrade

The firmware must be updated if the functional scope is extended in a more recent version and the corresponding functions need to be used.

The firmware must be downgraded if, for example, you want to use a lower version when installing a spare part on a CU305 already upgraded with a higher version.

A firmware update/downgrade may take a few minutes. The RDY (READY) LED on the CU305 lights up red (without flashing) to indicate the process is running.

Once all updates/downgrades are complete, the RDY (READY) and COM LEDs on the Control Unit flash red at a frequency of 0.5 Hz and the relevant RDY (READY) LED on the component flashes green/red at 2 Hz. To activate the firmware, carry out a POWER ON for all components.

For automatic updates/downgrades when switching the system off/on, proceed as follows:

⚠ CAUTION

Factory setting after firmware downgrades

With a downgrade, there is a risk of errors in the conversion of the parameters!

We recommend:

- Back up the parameters on a memory card before carrying out the downgrade.
- After a downgrade, re-establish the factory settings.
- Afterwards, copy the parameterization back into the CU305 (see section "Handling parameter datasets").

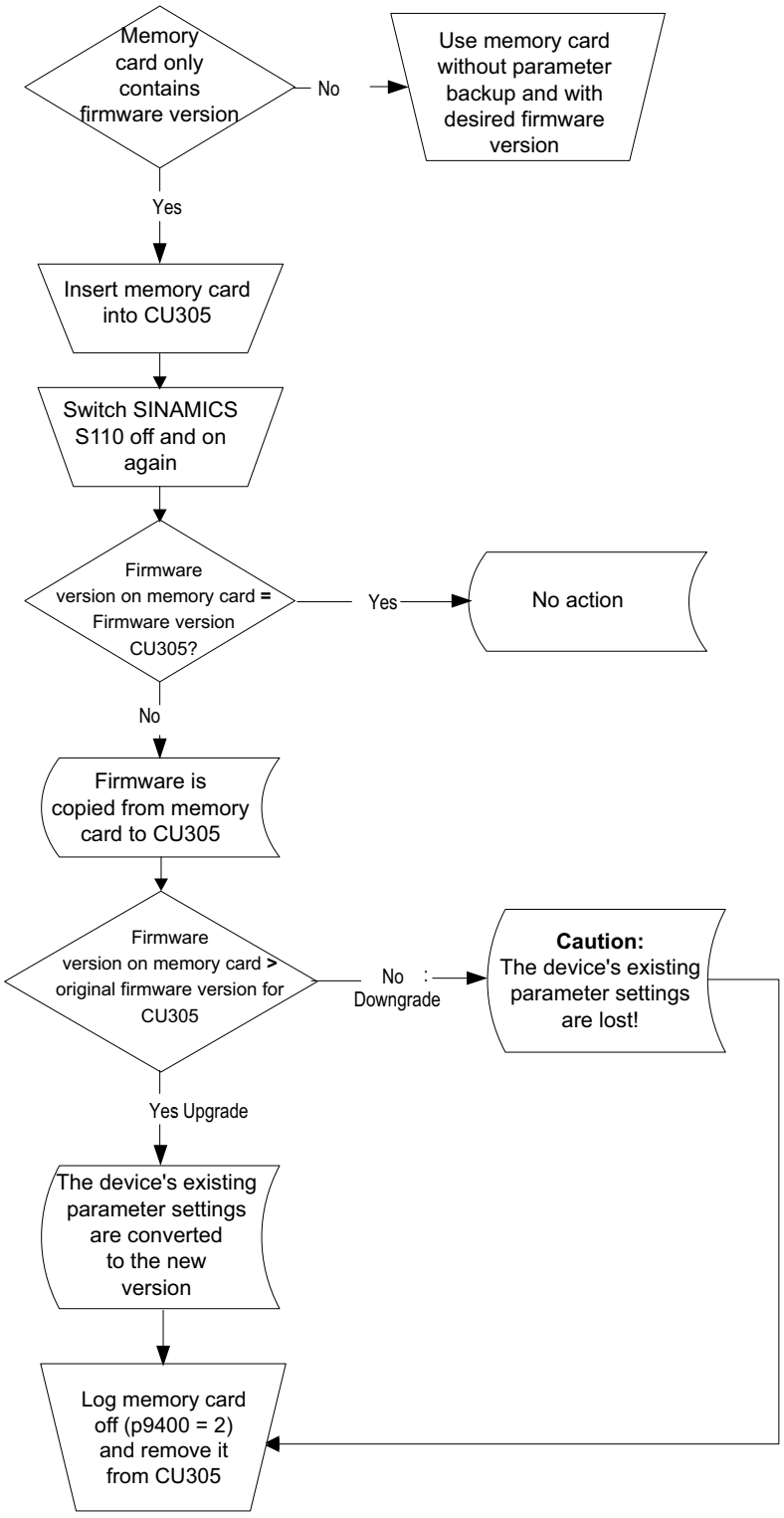

Figure 10-6 Firmware update/downgrade

10.3.3 Replacing the device

A CU305 has failed. You want to replace the device but retain the firmware version. You receive a new CU305 with the firmware version currently on release at the time of delivery.

To replace a device, proceed as follows:

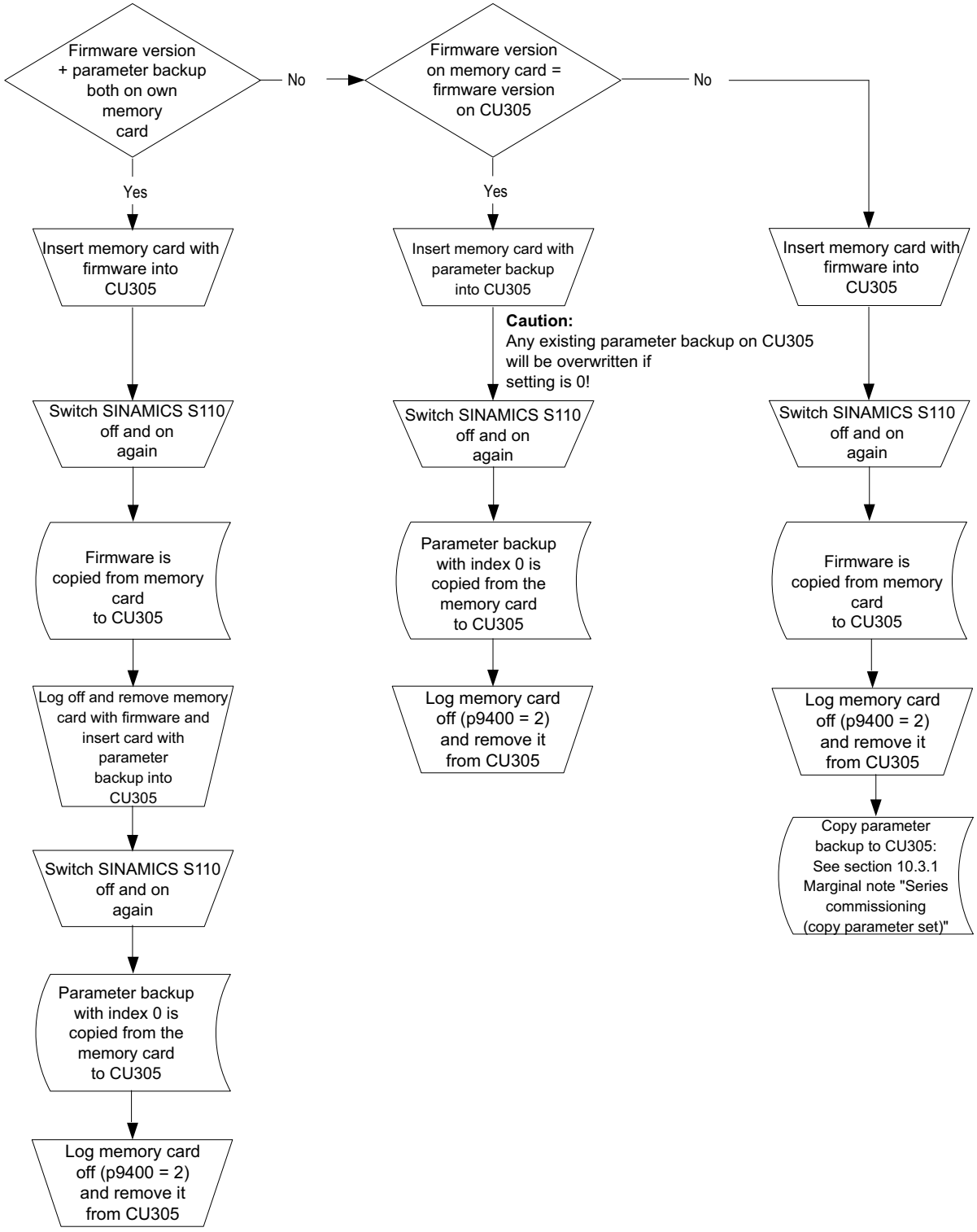

Figure 10-7 Replacing the device

10.3.4 Removing the memory card safely

CAUTION
The file system on the memory card may be destroyed if the card is removed without requesting and confirming this action in advance via the "Safe removal" function. If this happens, the memory card no longer works and has to be repaired.

If you want to remove the memory card from the device, proceed as follows:

- Set parameter p9400 = 2.
- Wait until the value of parameter p9400 changes to "3": The memory card can now be removed safely.
- If the value of parameter p9400 changes to "100", the memory card **cannot** be removed safely. Wait until the memory card is no longer being accessed and make a repeat request for safe removal via p9400 = 2.

10.3.5 Integration

Overview of important parameters (see SINAMICS S110 List Manual)

- p0977: Save all parameters
- p0802: Data transfer with memory card as source/target
- p0803: Data transfer with device memory as source/target
- p0804: Start data transfer
  - p0804 = 1 : Transfer from the memory card to non-volatile device memory
  - p0804 = 2: Transfer from non-volatile device memory to the memory card
  - If an error occurs during transfer of parameter data, this is also displayed in parameter p0804 (p0804 = 1001, 1002, 1003, or 1100).
- p7827 Firmware update progress indicator
- p9400 Remove card safely

10.4 BICO technology: Interconnecting signals

10.4.1 Description

Description

Every drive contains a large number of interconnectable input and output variables and internal control variables.

BICO technology (Binector Connector Technology) allows the drive to be adapted to a wide variety of conditions.

Digital and analog signals, which can be interconnected as required by means of BICO parameters, are identified by the prefix BI, BO, CI, or CO in their parameter name.

These parameters are identified accordingly in the parameter list or in the function diagrams.

Note

The STARTER commissioning tool is recommended when using BICO technology.

10.4.2 Binectors, connectors

Binectors, BI: Binector Input, BO: Binector Output

A binector is a digital (binary) signal without a unit which can assume the value 0 or 1.

Binectors are subdivided into binector inputs (signal sink) and binector outputs (signal source).

Table 10- 2 Binectors

Abbreviation	Symbol	Name	Description
BI		Binector input (signal sink)	Can be interconnected to a binector output as source. The number of the binector output must be entered as a parameter value.
BO		Binector output (signal source)	Can be used as a source for a binector input.

Connectors, CI: Connector Input, CO: Connector Output

A connector is a digital signal, e.g. in 32-bit format. It can be used to emulate words (16 bits), double words (32 bits) or analog signals. Connectors are subdivided into connector inputs (signal sink) and connector outputs (signal source).

Table 10- 3 Connectors

Abbreviation	Symbol	Name	Description
CI		Connector input (signal sink)	Can be interconnected to a connector output as source. The number of the connector output must be entered as a parameter value.
CO		Connector output (signal source)	Can be used as a source for a connector input.

10.4.3 Interconnecting signals using BICO technology

To interconnect two signals, a BICO input parameter (signal sink) must be assigned to the required BICO output parameter (signal source).

The following information is required for connecting a binector/connector input to a binector/connector output:

- Binectors: Parameter number, bit number, and drive object ID
- Connectors with no index: Parameter number and drive object ID
- Connectors with index: Parameter number, index, and drive object ID
- Data type (signal source for connector output parameter)

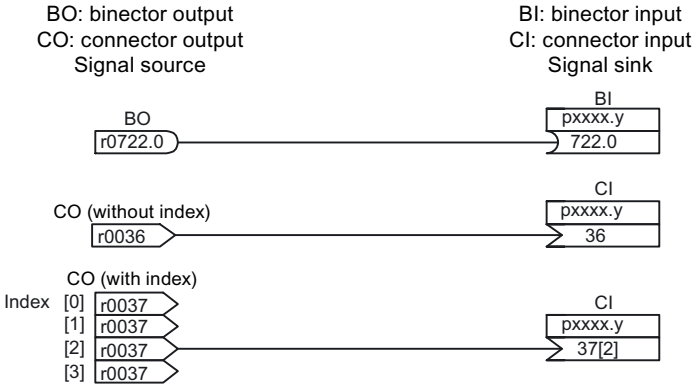

Figure 10-8 Interconnecting signals using BICO technology

Note

A connector input (CI) cannot be interconnected with any connector output (CO, signal source). The same applies to the binector input (BI) and binector output (BO).
For each CI and BI parameter, the parameter list shows under "data type" the information on the data type of the parameter and the data type of the BICO parameter.
For CO parameters and BO parameters, only the data type of the BICO parameter is shown.
Notation:
Data types BICO input: Data type parameter / Data type BICO parameter
Example: Unsigned32 / Integer16
Data types BICO output: Data type BICO parameter
Example: FloatingPoint32

The possible interconnections between the BICO input (signal sink) and the BICO output (signal source) are listed in the following documents:
References: SINAMICS S110 List Manual
Section "Explanation of list of parameters", table "Possible combinations for BICO interconnections".

The BICO parameter interconnection can be implemented in different command data sets (CDS). The different interconnections are activated by switching data sets. Interconnections across drive objects are also possible.

10.4.4 Internal encoding of the binector/connector output parameters

The internal codes are required for writing BICO input parameters via PROFIBUS, for example.

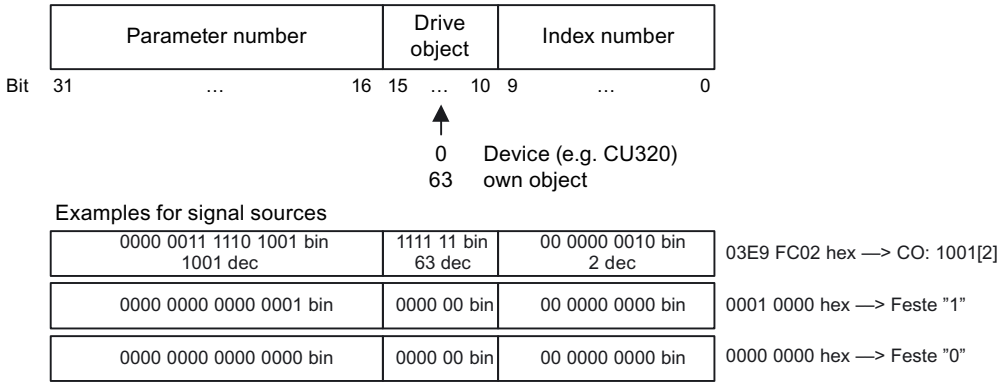

Figure 10-9 Internal encoding of the binector/connector output parameters

10.4.5 Sample interconnections

Example: Interconnection of digital signals

Suppose you want to operate a drive via terminals DI 0 and DI 1 on the Control Unit using jog 1 and jog 2.

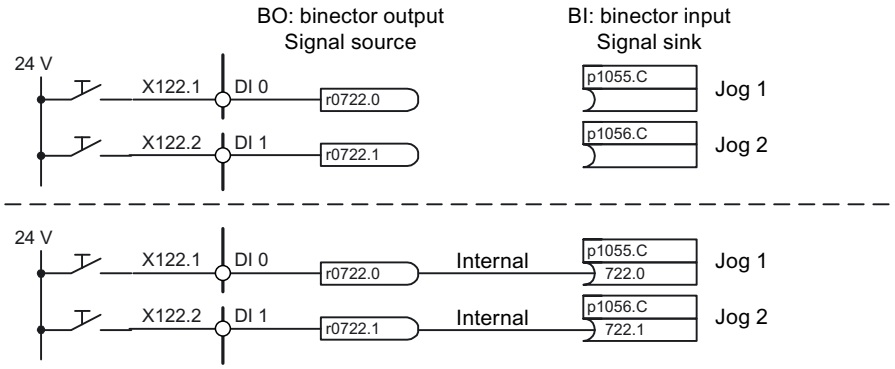

Figure 10-10 Interconnection of digital signals (example)

10.4.6 BICO technology:

Copying drives

When a drive is copied, the interconnection is copied with it.

Binector-connector converters and connector-binector converters

Binector-connector converter

- Several digital signals are converted to a 32-bit integer double word or to a 16-bit integer word.
- p2080[0...15] BI: PROFIdrive PZD send bit-serial

Connector-binector converter

- A 32-bit integer double word or a 16-bit integer word is converted to individual digital signals.
- p2099[0...1] CI: PROFIdrive PZD selection receive bit-serial

Fixed values for interconnection using BICO technology

The following connector outputs are available for interconnecting any fixed value settings:

- p2900[0...n] CO: Fixed value_%_1
- p2901[0...n] CO: Fixed value_%_2
- p2930[0...n] CO: Fixed value_M_1

Example:

These parameters can be used to interconnect the scaling factor for the main setpoint or to interconnect an additional torque.

10.4.7 Scaling

Signals for the analog outputs

Table 10- 4 List of signals for analog outputs

Signal	Parameter	Unit	Normalization (100 % = ...)
Speed setpoint before the setpoint filter	r0060	RPM	p2000
Speed actual value motor encoder	r0061	RPM	p2000
Speed actual value	r0063	RPM	p2000
Drive output frequency	r0066	Hz	Reference frequency
Absolute current actual value	r0068	Aeff	p2002
Actual DC link voltage value	r0070	V	p2001
Total torque setpoint	r0079	Nm	p2003
Actual active power	r0082	kW	r2004
Control deviation	r0064	RPM	p2000
Modulation depth	r0074	%	Reference modulation depth
Current setpoint, torque-generating	r0077	A	p2002
Current actual value, torque-generating	r0078	A	p2002
Flux setpoint	r0083	%	Reference flux
Flux actual value	r0084	%	Reference flux
Speed controller PI torque output	r1480	Nm	p2003
Speed controller I torque output	r1482	Nm	p2003

Changing scaling parameters p2000 to p2007

CAUTION
If a per unit representation is selected and the reference parameter is subsequently changed (e.g. p2000), the per unit values of some control parameters are automatically adapted so that the control behavior does not change.

10.5 Inputs/outputs

10.5.1 Overview of inputs/outputs

The following digital/analog inputs/outputs are available:

Table 10- 5 Overview of inputs/outputs

Component	Digital			Analog	
	Inputs	Bidirectional inputs/outputs	Outputs	Inputs	Outputs
CU305	11[1)]	4[2)]	1	1	–
1) Variable: floating or non-floating 2) 4 of these are "high-speed inputs"					

Note

For detailed information about the hardware properties of I/Os, please refer to:
Reference: SINAMICS S110 Equipment Manual Control Units

For detailed information about the structural relationships between all I/Os of a component and their parameters, please refer to the function diagrams in:
Reference: SINAMICS S110 List Manual

10.5.2 Digital inputs/outputs

Digital inputs

Properties

- The digital inputs are "high active".
- An open input is interpreted as "low".
- Fixed debouncing setting

  Delay time = 1 to 2 current controller cycles (250 µs)
- Availability of the input signal for further interconnection
  - inverted and not inverted as a binector output
  - as a connector output
- Simulation mode settable and parameterizable.
- Isolation block by block, set by jumper.
  - Jumper open: electrically isolated.
    The digital inputs function only if a reference ground is connected.
  - Jumper closed, non-floating.
    The reference potential of the digital inputs is the ground of the Control Unit.

Function diagrams (see SINAMICS S110 List Manual)

- 2020 Digital inputs, electrically isolated (DI 0 ... DI 3)
- 2021 Digital inputs, electrically isolated (DI 16 ... DI 19)
- 2022 Digital inputs, electrically isolated (DI 20 ... DI 22)
- 2030 Digital inputs/outputs, bidirectional (DI/DO 8 ... DI/DO 9)
- 2031 Digital inputs/outputs, bidirectional (DI/DO 10 ... DI/DO 11)

Digital output

Properties

- Separate power supply for the digital outputs.
- Source of output signal can be selected by parameter.
- Signal can be inverted by parameter.
- Status of output signal can be displayed
  - as a binector output
  - as a connector output

Note

Before the digital output can function, its own electronics power supply must be connected.

Function diagrams (see SINAMICS S110 List Manual)

- 2032 digital output (DO 16)

Bidirectional digital inputs/outputs

Properties

- Can be parameterized as digital input or output.
- When set as digital input:
  - Four "high-speed inputs" on Control Unit

    If these inputs are used, for example, for the "flying measurement" function, they act as "high-speed inputs" with virtually no time delay when the actual value is saved.
  - The properties of the "pure" digital outputs apply.
- When set as digital output:
  - The properties of the "pure" digital output apply.
- Sharing of bidirectional input/output resources by the CU and higher-level control (see section "Use of bidirectional inputs/outputs on the CU")

Function diagrams (see SINAMICS S110 List Manual)

- 2030 Bidirectional digital inputs/outputs (DI/DO 8 ... DI/DO 9)
- 2031 Bidirectional digital inputs/outputs (DI/DO 10 ... DI/DO 11)

10.5.3 Analog Input

Properties

- Hardware input filter set permanently
- Simulation mode parameterizable
- Adjustable offset
- Signal can be inverted via binector input
- Adjustable absolute-value generation
- Noise suppression (p0768)
- Enabling of inputs via binector input
- Output signal available via connector output
- Scaling
- Smoothing

NOTICE
Scaling parameters p0757 to p0760 do not limit the voltage/current values.

Function diagram (see SINAMICS S110 List Manual)

- 2040 Analog input (AI)

10.6 Replacing SMI and DQI components

Replacement of SINAMICS Sensor Module Integrated or DRIVE-CLiQ Sensor Integrated

If a defect occurs in a SINAMICS Sensor Module Integrated (SMI) or a DRIVE-CLiQ Sensor Integrated (DQI), contact your local Siemens office for a repair.

10.7 System sampling times

The software functions installed in the system are executed cyclically at different sampling times.

The sampling times of the functions are pre-assigned automatically when the drive unit is configured.

- Current controller 250 µs
- Speed controller 250 µs
- Flux controller 250 µs
- Setpoint channel 4,000 µs
- Position controller 1,000 µs
- Positioning 4,000 µs
- Technology controller 4,000 µs

For p0092 = 1, the sampling times are pre-assigned so that isochronous operation together with a control is possible. If isochronous operation is not possible due to incorrect sampling time settings, then an appropriate message is output (A01223, A01224). Before the automatic configuration, parameter p0092 must be set to "1" in order that the sampling times are appropriately pre-set.

- p0009 Device commissioning, parameter filter
- p0092 Isochronous PROFIBUS operation, pre-assignment/check
- p0097 Selects the drive object type
- p1800 Pulse frequency
- r9780 SI monitoring clock cycle (Control Unit)
- r9880 SI monitoring clock cycle (Motor Module)

10.8 Licensing

Description

SINAMICS S110 requires that a license purchased specifically for this purpose is assigned to the hardware if the Extended Functions of Safety Integrated are to be used. In doing this you will receive a license key, which links the Extended Functions of Safety Integrated with the hardware electronically. In order to assign the license to the hardware, you must have a memory card (this also has to be purchased separately).

The license key is an electronic license stamp declaring that one or more software licenses have been purchased.

Actual customer verification of the license for the software that is subject to license is called a certificate of license.

Note

Refer to the order documentation (e.g. catalogs) for information on basic functions and functions subject to license.

System response where license is insufficient for an option

An insufficient option license is indicated via the following alarm and LED on the Control Unit:

- A13000 License not sufficient
- RDY LED flashes green/red at 0.5 Hz

NOTICE
The drive system can only be operated with an insufficient option license during commissioning and servicing. The drive requires a sufficient license in order for it to operate normally.

System response where license is insufficient for a function module

An insufficient function module license is indicated via the following fault and LED on the Control Unit:

- F13010 Function module license, not licensed
- The OFF1 response brings the drive to a standstill.
- RDY LED permanently lit

NOTICE
The drive system cannot be operated if the license for a function module is insufficient. The drive requires a sufficient license in order for it to operate normally.

Properties of the license key

- Is assigned to a specific memory card.
- Saved in non-volatile memory.
- Is not transferrable.
- Can be acquired using the "WEB License Manager" from a license database.

Generating a license key via the "WEB License Manager"

The following information is required:

- Serial number for the memory card
- License number and delivery note number of the license (on the Certificate of License)

1. Call up the "WEB License Manager".
   http://www.siemens.com/automation/license
2. Choose "Direct access".
3. Enter the license number and delivery note number of the license.
   → Click "Next".
4. Enter serial number.
5. Select a product, e. g. "SINAMICS S CU3xx".
   → Click "Next".
6. Choose "Available license numbers".
   → Click "Next".
7. Check the assignment.
   → Click "Assign".
8. When you are sure that the license has been correctly assigned, click "OK".
9. The license key is displayed and can be entered.

Entering the license key

Note

You need to insert the memory card into the Control Unit before entering the license key.

With the STARTER commissioning tool, the ASCII characters are not entered in code, but the letters and numbers in the license key can be input directly as they appear on the license certificate.
In this case, the ASCII coding is processed by STARTER in the background.

Example of a license key:

E1MQ-4BEA = 69 49 77 81 45 52 66 69 65 dec (ASCII characters)

Procedure for entering a license key (see example):

p9920[0] = E 1st character

...

p9920[8] = A 9th character

Note

When changing p9920[x] to the value 0, all of the following indices are also set to 0.

After the license key has been entered, it has to be activated as follows:

- p9921 = 1 Licensing, activate license key

  The parameter is automatically reset to 0

Entering the license key with BOP20

If you use the BOP20 to enter the license key, you will need to use the ASCII code for the key (see above for an example). In the table below, you can enter the characters in the license key and the corresponding decimal numbers.

Table 10- 6 License key table

Letter/number												
decimal												

ASCII code

Table 10- 7 Excerpt of ASCII code

Letter/number	decimal	Letter/number	decimal
-	45	I	73
0	48	J	74
1	49	K	75
2	50	L	76
3	51	M	77
4	52	N	78
5	53	O	79
6	54	P	80
7	55	Q	81
8	56	R	82
9	57	S	83
A	65	T	84
B	66	U	85
C	67	V	86
D	68	W	87
E	69	X	88
F	70	Y	89
G	71	Z	90
H	72	Blanks	32

Overview of important parameters (see SINAMICS S110 List Manual)

- p9920 Licensing, enter license key
- p9921 Licensing, activate license key

Appendix 11

11.1 Availability of SW functions

In conjunction with the Control Unit, SINAMICS S110 Version 4.1 supports the following functions:

No.	SW function
1	Control type: Servo Control
2	Fixed clock cycles • Current controller 250 µs • Speed controller 250 µs • Position controller 1 ms • EPOS 4 ms
3	Data sets • 2 DDS • 2 MDS • 1 EDS • 2 CDS
4	Supported motor series • 1FK6; 1FK7 • 1FT6; 1FT7 • 1PH7; 1PH8 • 1LA
5	Safety Integrated functions • Basic Functions STO, SBC, SS1 controllable via on-board terminal (F-DI 0); license-free and require no encoder. If Basic Functions are used via PROFIsafe, a license and encoder with safety capability are still required at the present time. • Extended Functions SS1 (with SAM), SS2, SOS, SLS, SSM controllable via on-board terminal (F-DI 0…2) or PROFIsafe, require both a license and an encoder with Safety capability. • Note: Safe Brake Relay is needed to use the SBC function.
6	EPos with 16 traversing blocks
7	Free Blocks
8	Technology controller
9	Vdc controller (contains Vdc_min control)
10	Automatic restart
11	15 fixed speed setpoints
12	1 speed setpoint filter

No.	SW function
13	2 current setpoint filters
14	Extended brake control
15	Armature short-circuit brake
16	Speed controller optimization
17	Motor identification
18	Pole position identification

In conjunction with the Control Unit, Version 4.3 SP1 of SINAMICS S110 supports the following new functions:

No.	SW function
1	Pulse/direction interface for positioning mode on an S7-1200
2	Communication • USS (alternative to PROFIBUS via X21 on a CU305-DP) for positioning mode on an S7-1200 • PROFIBUS slave-to-slave communication
3	Data sets • 2 EDS (1 EDS per DDS)
4	SSI encoder evaluation on integrated encoder evaluation (X23) for SSI encoder without incremental tracks
5	V/f characteristic in Servo control mode, not only as a diagnostic function, but also enabled for general operation
6	Safety Integrated functions • Control of Basic Functions via PROFIsafe • Extended Functions: SLS (Safely Limited Speed) and SBR (Safe Brake Ramp), encoderless use now also possible for induction motors • Extended Functions: Safe Speed Monitor now has its own limit parameter. Previously, the same parameter (p9546) as for the SAM shutdown speed was used
7	Improved usability for SMI spare part installation: • Automatic backup of motor and encoder data • Can be operated with an empty SMI without even reducing the comparison level • An SMI with data already written to it can be deleted and then used as an SMI spare part • Fault message if incorrect data recorded to an SMI
8	Setpoint-based utilization display instead of the previous actual-value-based utilization display

In conjunction with the Control Unit, Version 4.4 of SINAMICS S110 supports the following new functions:

No.	SW function
1	Safety Integrated functions • SLS without encoder for synchronous motors • SSM without encoder for synchronous motors • SDI (Safe Direction) for synchronous and induction motors (with and without encoder)
2	Communication • PROFINET address can be written via parameter (e.g. when completely generating the project offline) • Shared device for SINAMICS S PROFINET modules: CU305 PN
3	
4	
5	
6	
7	
8	

11.2 Availability of hardware components

Table 11- 1 Hardware components available as of 01.2011

No.	HW component	Order number	Version	Revisions
1	CU305 PN		4.4	new
2	IOP for CU305	Release of IOP is scheduled for approximately April 2011	4.4	–

11.3 List of abbreviations

Note:

The following list of abbreviations includes all abbreviations and their meanings used in the entire SINAMICS user documentation.

Abbreviation	Source of abbreviation	Meaning
A		
A...	Alarm	Alarm
AC	Alternating Current	Alternating current
ADC	Analog Digital Converter	Analog digital converter
AI	Analog Input	Analog input
AIM	Active Interface Module	Active Interface Module
ALM	Active Line Module	Active Line Module
AO	Analog Output	Analog output
AOP	Advanced Operator Panel	Advanced Operator Panel
APC	Advanced Positioning Control	Advanced Positioning Control
AR	Automatic Restart	Automatic restart
ASC	Armature Short Circuit	Armature short circuit
ASCII	American Standard Code for Information Interchange	American standard code for information interchange
ASM	Asynchronmotor	Induction motor
B		
BERO	-	Contactless proximity switch
BI	Binector Input	Binector input
BIA	Berufsgenossenschaftliches Institut für Arbeitssicherheit	Germany's Institute for Occupational Safety and Health
BICO	Binector Connector Technology	Binector connector technology
BLM	Basic Line Module	Basic Line Module
BO	Binector Output	Binector output
BOP	Basic Operator Panel	Basic Operator Panel

Abbreviation	Source of abbreviation	Meaning
C		
C	Capacitance	Capacitance
C...	-	Safety message
CAN	Controller Area Network	Serial bus system
CBC	Communication Board CAN	Communication board CAN
CD	Compact Disc	Compact Disc
CDC	Crosswise data comparison	Crosswise data comparison
CDS	Command Data Set	Command data set
CF Card	CompactFlash Card	CompactFlash Card
CI	Connector Input	Connector input
CLC	Clearance Control	Clearance control
CNC	Computer Numerical Control	Computer numerical control
CO	Connector Output	Connector output
CO/BO	Connector Output/Binector Output	Connector/binector output
COB ID	CAN Object Identification	CAN Object identification
COM	Common contact of a changeover relay	Center contact of a changeover contact
COMM	Commissioning	Commissioning
CP	Communication Processor	Communication processor
CPU	Central Processing Unit	Central processing unit
CRC	Cyclic Redundancy Check	Cyclic redundancy check
CSM	Control Supply Module	Control Supply Module
CU	Control Unit	Control Unit
CUA	Control Unit Adapter	Control Unit Adapter
CUD	Control Unit DC MASTER	Control Unit DC MASTER
D		
DAC	Digital Analog Converter	Digital analog converter
DC	Direct Current	DC current
DC link	DC link	DC link
DCB	Drive Control Block	Drive Control Block
DCC	Drive Control Chart	Drive Control Chart
DCC	Data Cross Check	Crosswise data comparison
DCN	Direct Current Negative	DC current negative
DCP	Direct Current Positive	DC current positive
DDS	Drive Data Set	Drive data set
DI	Digital Input	Digital input
DI/DO	Digital Input/Digital Output	Digital input/output bidirectional
DMC	DRIVE-CLiQ Hub Module Cabinet	DRIVE-CLiQ Hub Module Cabinet
DME	DRIVE-CLiQ Hub Module External	DRIVE-CLiQ Hub Module External
DO	Digital Output	Digital output
DO	Drive Object	Drive object

Abbreviation	Source of abbreviation	Meaning
DP	Decentralized Peripherals	Distributed IOs
DPRAM	Dual Ported Random Access Memory	Memory with dual access ports
DRAM	Dynamic Random Access Memory	Dynamic memory
DRIVE-CLiQ	Drive Component Link with IQ	Drive Component Link with IQ
DSC	Dynamic Servo Control	Dynamic Servo Control
E		
EASC	External Armature Short Circuit	External armature short circuit
EDS	Encoder Data Set	Encoder data set
ESD	Electrostatic Sensitive Devices	Electrostatic sensitive devices
ELCB	Earth Leakage Circuit Breaker	Earth leakage circuit breaker
ELP	Earth Leakage Protection	Earth leakage protection
EMC	Electromagnetic Compatibility	Electromagnetic compatibility
EMF	Electromagnetic Force	Electromagnetic force
EMC	Electromagnetic compatibility	Electromagnetic compatibility
EN	European standard	European standard
EnDat	Encoder Data Interface	Encoder interface
EP	Enable Pulses	Pulse enable
EPOS	Einfachpositionierer	Basic positioner
ES	Engineering System	Engineering System
ESB	Equivalent circuit diagram	Equivalent circuit diagram
ESD	Electrostatic Sensitive Devices	Electrostatic sensitive devices
ESR	Extended Stop and Retract	Extended stop and retract
F		
F...	Fault	Fault
FAQs	Frequently Asked Questions	Frequently asked questions
FBL	Free Blocks	Free function blocks
FCC	Function Control Chart	Function Control Chart
FCC	Flux Current Control	Flux current control
FD	Function Diagram	Function diagram
F-DI	Failsafe Digital Input	Fail-safe digital input
F-DO	Failsafe Digital Output	Fail-safe digital output
FEM	Fremderregter Synchronmotor	Separately excited synchronous motor
FEPROM	Flash EPROM	Non volatile read and write memory
FG	Function Generator	Function generator
FI	-	Fault current
FOC	Fiber-Optic Cable	Fiber-optic cable
FP	Function diagram	Function diagram
FPGA	Field Programmable Gate Array	Field Programmable Gate Array

Abbreviation	Source of abbreviation	Meaning
FW	Firmware	Firmware
G		
GB	Gigabyte	Gigabyte
GC	Global Control	Global Control Telegram (Broadcast Telegramm)
GND	Ground	Reference potential for all signal and operating voltages, usually defined as 0 V (also referred to as G)
GSD	Generic Station Description	Generic station description: Describes the characteristics of a PROFIBUS slave
GSV	Gate Supply Voltage	Gate Supply Voltage
GUID	Globally Unique Identifier	Globally unique identifier
H		
HF	High Frequency	High frequency
HFD	Hochfrequenzdrossel	High-frequency reactor
HMI	Human Machine Interface	Human machine interface
HTL	High-Threshold Logic	Logic with a high fault threshold
HW	Hardware	Hardware
I		
I/O	Input/Output	Input/output
I2C	Inter-Integrated Circuit	Internal serial data bus
IASC	Internal Armature Short Circuit	Internal armature short circuit
IBN	Inbetriebnahme	Commissioning
ID	Identifier	Identification
IE	Industrial Ethernet	Industrial Ethernet
IEC	International Electrotechnical Commission	International Electrotechnical Commission
IF	Interface	Interface
IGBT	Insulated Gate Bipolar Transistor	Insulated gate bipolar transistor
IGCT	Integrated Gate-Controlled Thyristor	Semiconductor power switch with integrated control electrode
IL	Impulslöschung	Pulse cancelation
IP	Internet Protocol	Internet Protocol
IPO	Interpolator	Interpolator
IT	Isolé Terré	Non-grounded three-phase power supply
IVP	Internal Voltage Protection	Internal voltage protection
J		
JOG	Jogging	Jogging

Abbreviation	Source of abbreviation	Meaning
K		
KIP	Kinetische Pufferung	Kinetic buffering
Kp	-	Proportional gain
KTY	-	Special temperature sensor
L		
L	-	Formula symbol for inductance
LED	Light Emitting Diode	Light Emitting Diode
LIN	Linear motor	Linear motor
LSB	Least Significant Bit	Least significant bit
LSC	Line-Side Converter	Line-side converter
LSS	Line Side Switch	Line side switch
LU	Length Unit	Length unit
M		
M	-	Formula symbol for torque
M	Masse	Reference potential for all signal and operating voltages, usually defined as 0 V (also referred to as GND)
MB	Megabyte	Megabyte
MCC	Motion Control Chart	Motion Control Chart
MDS	Motor Data Set	Motor data set
MLFB	Maschinenlesbare Fabrikatebezeichnung	Machine-Readable Product Code
MMC	Man-Machine Communication	Man-machine communication
MMC	Micro Memory Card	Micro memory card
MSB	Most Significant Bit	Most significant bit
MSC	Motor-Side Converter	Motor-side converter
MSCY_C1	Master Slave Cycle Class 1	Cyclic communication between master (Class 1) and slave
MSR	Motorstromrichter	Motor-side converter
MT	Machine Tool	Machine tool
N		
N. C.	Not Connected	Not connected
N...	No Report	No message or internal message
NAMUR	Normenarbeitsgemeinschaft für Mess- und Regeltechnik in der chemischen Industrie	Standardization association for measurement and control in the chemical industry
NC	Normally Closed (contact)	NC contact
NC	Numerical Control	Numerical control
NEMA	National Electrical Manufacturers Association	Standardization body in the US
NM	Nullmarke	Zero mark
NO	Normally Open (contact)	NO contact

Abbreviation	Source of abbreviation	Meaning
NSR	Netzstromrichter	Line-side converter
NVRAM	Non-Volatile Random Access Memory	Non-volatile read/write memory
O		
OA	Open Architecture	Open Architecture
OC	Operating Condition	Operating condition
OEM	Original Equipment Manufacturer	Original Equipment Manufacturer
OLP	Optical Link Plug	Fiber-optic bus connector
OMI	Option Module Interface	Option module interface
P		
p...	-	Adjustable parameters
PB	PROFIBUS	PROFIBUS
PC	Position Controller	Position Controller
PcCtrl	PC Control	Control for master
PD	PROFIdrive	PROFIdrive
PDS	Power unit Data Set	Power unit data set
PE	Protective Earth	Protective earth
PELV	Protective Extra Low Voltage	Protective extra low voltage
PEM	Permanenterregter Synchronmotor	Permanent-magnet synchronous motor
PG	Programmiergerät	Programming device
PI	Proportional Integral	Proportional integral
PID	Proportional Integral Differential	Proportional integral differential
PLC	Programmable Logic Controller	Programmable logic controller
PLL	Phase-Locked Loop	Phase-locked loop
PN	PROFINET	PROFINET
PNO	PROFIBUS Nutzerorganisation	PROFIBUS user organization
PPI	Point-to-Point Interface	Point-to-point interface
PRBS	Pseudo Random Binary Signal	White noise
PROFIBUS	Process Field Bus	Serial data bus
PS	Power Supply	Power supply
PSA	Power Stack Adapter	Power Stack Adapter
PTC	Positive Temperature Coefficient	Positive temperature coefficient
PTP	Point-To-Point	Point-to-Point
PWM	Pulse Width Modulation	Pulse width modulation
PZD	Prozessdaten	Process data
R		
r...	-	Display parameters (read-only)
RAM	Random Access Memory	Read/write memory
RCCB	Residual Current Circuit Breaker	Residual current operated circuit breaker
RCD	Residual Current Device	Residual current operated circuit breaker
RCM	Residual Current Monitor	Residual current monitor

Abbreviation	Source of abbreviation	Meaning
RFG	Ramp-Function Generator	Ramp-function generator
RJ45	Registered Jack 45	Term for an 8-pin socket system for data transmission with shielded or non-shielded multi-wire copper cables
RKA	Rückkühlanlage	Cooling unit
RO	Read Only	Read only
RPDO	Receive Process Data Object	Receive process data object
RS232	Recommended Standard 232	Interface standard for cable-connected serial data transmission between a sender and receiver (also known under EIA232)
RS485	Recommended Standard 485	Interface standard for a cable-connected differential, parallel, and/or serial bus system (data transmission between a number of senders and receivers, also known under EIA485)
RTC	Real Time Clock	Real time clock
RZA	Raumzeigerapproximation	Space vector approximation
S		
S1	-	Uninterrupted duty
S3	-	Intermittent duty
SBC	Safe Brake Control	Safe brake control
SBH	Sicherer Betriebshalt	Safe operating stop
SBR	-	Safe acceleration monitoring
SCA	Safe Cam	Safe cam
SD Card	SecureDigital Card	Secure digital memory card
SE	Sicherer Software-Endschalter	Safe software limit switch
SG	Sicher reduzierte Geschwindigkeit	Safely reduced speed
SGA	Sicherheitsgerichteter Ausgang	Safety-related output
SGE	Sicherheitsgerichteter Eingang	Safety-related input
SH	Sicherer Halt	Safe standstill
SI	Safety Integrated	Safety Integrated
SIL	Safety Integrity Level	Safety Integrity Level
SLM	Smart Line Module	Smart Line Module
SLP	Safely-Limited Position	Safely-limited position
SLS	Safely Limited Speed	Safely limited speed
SLVC	Sensorless Vector Control	Vector control without encoder
SM	Sensor Module	Sensor Module
SMC	Sensor Module Cabinet	Sensor Module Cabinet
SME	Sensor Module External	Sensor Module External
SN	Sicherer Software-Nocken	Safe software cam
SOS	Safe Operating Stop	Safe operating stop

Abbreviation	Source of abbreviation	Meaning
SP	Service Pack	Service pack
SPC	Setpoint Channel	Setpoint channel
SPI	Serial Peripheral Interface	Serial interface for connecting peripherals
SS1	Safe Stop 1	Safe stop 1 (monitored for time and ramping up)
SS2	Safe Stop 2	Safe stop 2
SSI	Synchronous Serial Interface	Synchronous serial interface
SSM	Safe Speed Monitor	Safe feedback for speed monitoring (n < nx)
SSP	SINAMICS Support Package	SINAMICS support package
STO	Safe Torque Off	Safe torque off
STW	Steuerwort	Control word
T		
TB	Terminal Board	Terminal Board
TIA	Totally Integrated Automation	Totally Integrated Automation
TM	Terminal Module	Terminal module
TN	Terre Neutre	Grounded three-phase supply network
Tn	-	Integral time
TPDO	Transmit Process Data Object	Transmit process data object
TT	Terre Terre	Grounded three-phase supply network
TTL	Transistor-Transistor Logic	Transistor-transistor logic
Tv	-	Rate time
U		
u.d.	under development	Under development: This feature is not currently available
UL	Underwriters Laboratories Inc.	Underwriters Laboratories Inc.
UPS	Uninterruptible Power Supply	Uninterruptible power supply
UTC	Universal Time Coordinated	Universal time coordinated
V		
VC	Vector Control	Vector control
Vdc	-	DC link voltage
VdcN	-	Partial DC link voltage negative
VdcP	-	Partial DC link voltage positive
VDE	Verband Deutscher Elektrotechniker	Association of German electrical engineers
VDI	Verein Deutscher Ingenieure	Association of German Engineers
VPM	Voltage Protection Module	Voltage Protection Module
Vpp	Volt peak-to-peak	Volt peak-to-peak
VSM	Voltage Sensing Module	Voltage Sensing Module

Abbreviation	Source of abbreviation	Meaning
X		
XML	Extensible Markup Language	Standard language for Web publishing and document management
Z		
ZM	Zero Mark	Zero mark
ZSW	Zustandswort	Status word

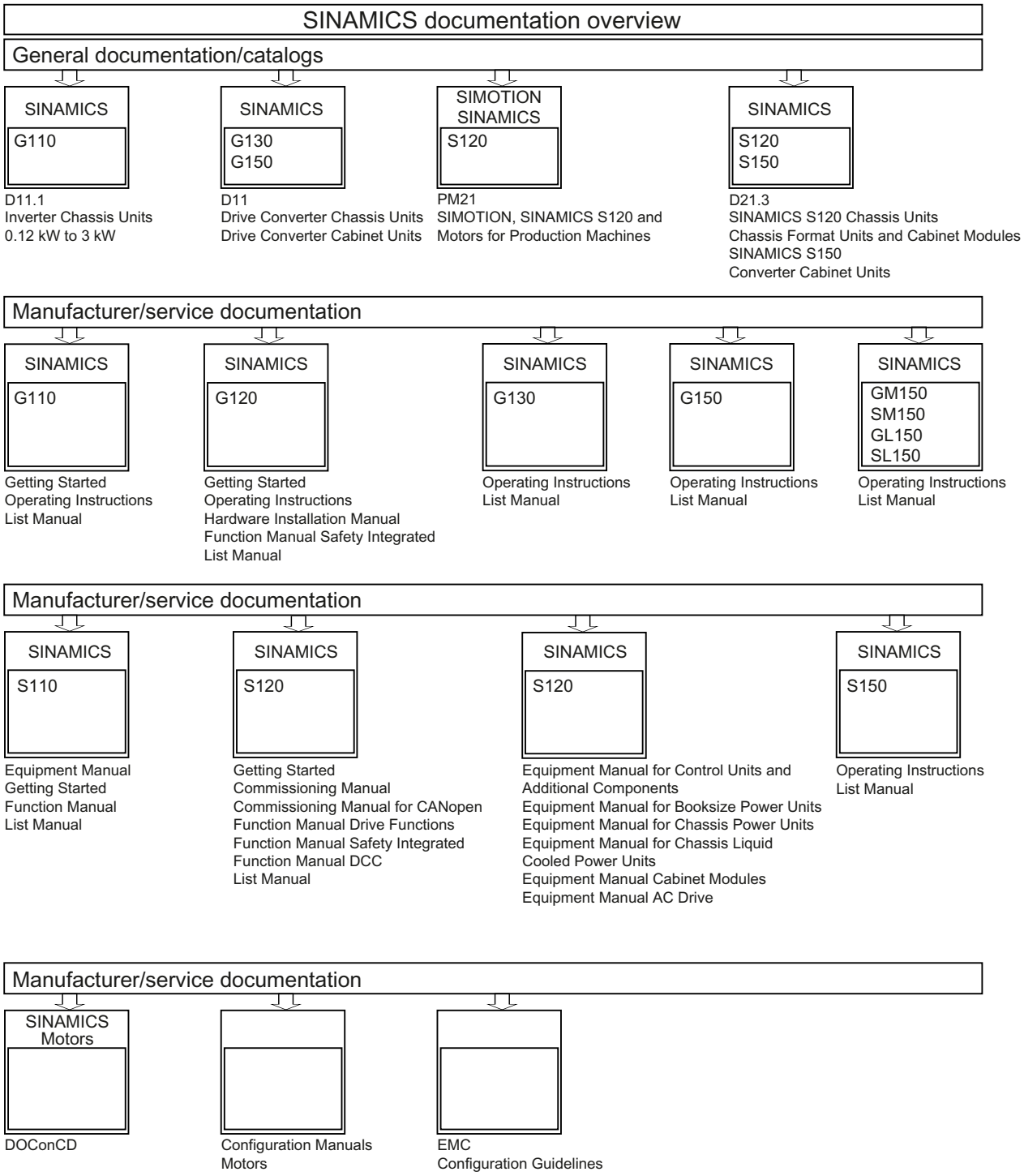
SINAMICS documentation overview
General documentation/catalogs
SINAMICS
G110
D11.1
Inverter Chassis Units
0.12 kW to 3 kW
SINAMICS
G130
G150
D11
Drive Converter Chassis Units
Drive Converter Cabinet Units
SIMOTION
SINAMICS
S120
PM21
SIMOTION, SINAMICS S120 and
Motors for Production Machines
SINAMICS
S120
S150
D21.3
SINAMICS S120 Chassis Units
Chassis Format Units and Cabinet Modules
SINAMICS S150
Converter Cabinet Units
Manufacturer/service documentation
SINAMICS
G110
Getting Started
Operating Instructions
List Manual
SINAMICS
G120
Getting Started
Operating Instructions
Hardware Installation Manual
Function Manual Safety Integrated
List Manual
SINAMICS
G130
Operating Instructions
List Manual
SINAMICS
G150
Operating Instructions
List Manual
SINAMICS
GM150
SM150
GL150
SL150
Operating Instructions
List Manual
Manufacturer/service documentation
SINAMICS
S110
Equipment Manual
Getting Started
Function Manual
List Manual
SINAMICS
S120
Getting Started
Commissioning Manual
Commissioning Manual for CANopen
Function Manual Drive Functions
Function Manual Safety Integrated
Function Manual DCC
List Manual
SINAMICS
S120
Equipment Manual for Control Units and
Additional Components
Equipment Manual for Booksize Power Units
Equipment Manual for Chassis Power Units
Equipment Manual for Chassis Liquid
Cooled Power Units
Equipment Manual Cabinet Modules
Equipment Manual AC Drive
SINAMICS
S150
Operating Instructions
List Manual
Manufacturer/service documentation
SINAMICS
Motors
DOConCD
Configuration Manuals
Motors
EMC
Configuration Guidelines

Index

"

"high-speed inputs",

A

Absolute encoder
    Adjustment, 243
Acceptance test, 448
    SBC (Basic Function), 479
    SBC without encoder, 513
    SLS with encoder (STOP A), 492
    SLS with encoder (STOP B), 495
    SLS with encoder (STOP C), 498
    SLS with encoder (STOP D), 501, 504
    SLS without encoder (STOP A), 514
    SLS without encoder (STOP B), 517
    SOS, 489
    SS1 with encoder, 485
    SS1 with encoder, 485
    SS1 without encoder, 511
    SS1, time and acceleration controlled, 477
    SS2, 486
    SSM, 507
    STO (Basic Function), 475
    STO with encoder, 481
    STO without encoder, 509
Access levels, 657
Acknowledgment, 106
Acknowledgment:Extended, 402
Activating PROFISAFE, 448
Actual position value format
    2-pole resolver, 32
Actual value acquisition, 405
Actual value synchronization
    Encoder, 406
Address
    License manager on the Internet, 686
    Setting the PROFIBUS address, 592
Adjustment
    Absolute encoder, 243
Alarm buffer, 109, 403
Alarm classes
    Faults and alarms, 113
Alarm history, 109, 403
Alarm value, 109, 403
Alarms, 105
    Alarm buffer, 109, 403
    Alarm history, 109, 403
    configure, 110
Analog inputs, 680
    Properties, 683
    Signal processing, 683
Analog outputs, 680
Application classes, 523
Armature short-circuit brake, 193
Armature short-circuit braking
    external, 193
ASCII code
    Licensing, 688
Automatic restart, 191
Axis
    Suspended/hanging, 175

B

Basic Functions via PROFIsafe and terminals, 422
Basic Positioner, 233
Basic positioning
    Referencing, 241
BICO technology
    Converters, 678
    Fixed values, 678
    Interconnecting signals, 676
    What is it?, 674
Bidirectional inputs/outputs, 680
Binector, 675
BOP20
    Control word, drive, 122
    Important functions, 51, 52
Brake control
    Basic, 197
Brake Control
    Extended, 212

C

Calling Safety Integrated, 429
Cam controllers, 228
CBC10, 67
Central probe
    Example, 573

Change password
Safety Integrated, 438
Closed-loop position control, 217
Commissioning
Checklist, 38
PROFIsafe with STARTER, 449
Safety terminals, 436
with STARTER, 46
Communication
about PROFIdrive, 522
via PROFIBUS, 589
Communication Board, 67
Connector, 675
Control Unit
LEDs during booting, 87
Controller setting, automatic
Servo, 148
Copying parameter data sets from non-volatile memory to the memory card, 666
Copying parameter data sets from the memory card to non-volatile memory, 667
Current setpoint filter
Servo, 137

D

Data sets
Command data set (CDS), 658
Drive data set (DDS), 660
Encoder data set (EDS), 661
Motor data set (MDS), 662
Data transfer
PROFINET, 618
DCP flashing, 623
Detail view, 21
Determining the axis number, 583
Determining the object number, 583
Determinism, 617
Device identification, 593
Device name, 621
Diagnosis
Via LEDs on Sensor Module Cabinet SMC20, 91
Diagnostic function, 93
Function generator, 93
Measuring sockets, 101
Trace, 97
V/f control for servo control, 144
Diagnostics
Via LEDs on Sensor Module Cabinet SMC10, 91
Diagnostics via LEDs
Sensor Module Cabinet SMC30, 92
Digital inputs, 680
Bidirectional, 682
If they are not functioning, 681
Properties, 681
Signal processing, 681
Digital outputs, 680
Bidirectional, 682
Properties, 682
Signal processing, 682
Direct setpoint input (MDI), 262
Direction reversal, 203
Downgrade, 669

E

EDS, 661
Enabling PROFIsafe, 422
Encoder
Actual value synchronization, 406
Encoder interface, 558
Find reference mark, 561
Flying measurement, 562
Encoder range, 220
Encoder systems, 405
EPOS, 233
Absolute encoder adjustment, 32
Direct setpoint input (MDI), 262
Flying referencing, 247
Intermediate stop, 254, 264
Jog, 265
Limits, 237
Mechanical system, 235
Reject traversing task, 254, 264
Traversing blocks, 252
ESD information, 7
Example
Setting the PROFIBUS address, 592
Extended acknowledgment, 402

F

F parameters, 451
Fault buffer, 107
Fault response, 399
Fault value, 107
FAULT_CODE, 557
Faults, 113
Acknowledgment, 106
configure, 110
Fault buffer, 107
Faults and alarms, 113
Alarm classes, 113

BICO interconnections, 113
FBLOCKS, 287
Find reference mark, 561
Firmware update/downgrade, 669
Fixed setpoints, 275
Fixed speed setpoints, 275
Flying measurement, 562
Flying referencing
EPOS, 247
Following error monitoring
Dynamic, 228
Forced dormant error detection, 361, 409
Foreword, 3
Free function blocks
Activating the individual function blocks, 298
ADD, 304
AND, 302
Application examples, 287
AVA, 305
BSW, 310
Calculation time load, 299
Commissioning, 298
Configuration and operation, 288
Connection to the drive, 294
DFR, 310
DIF, 314
DIV, 305
Examples, 294
INT, 313
LIM, 311
LVM, 315
MFP, 306
MUL, 304
NOT, 303
NSW, 311
Number of possible different hardware sampling times, 300
OR, 303
Overview, 287
PCL, 306
PDE, 307
PDF, 308
PST, 309
PT1, 312
Range of blocks, 293
RSR, 309
Run sequence, 288
Runtime group, 288
Sampling time, 288
SUB, 304
XOR, 303
Free PDO mapping, 72
Free telegrams, 529
FREEBLOCKS, 287
Function generator
Properties, 94
Function module
Closed-loop position control, 217
Extended brake control, 212
Function modules, 204
Extended monitoring functions, 210
Technology controller, 205
Function of Safely Limited Speed with encoder, 375
Function test, 409
Functions
Fixed speed setpoints, 275
Jog, 271
Motorized potentiometer, 276
Safe brake control (SBC), 357
Safe Torque Off, 352
Servo control, 123
Travel to fixed stop, 170
V/f control for servo control, 144

G

Generator for signals, 93

H

Heartbeat, 69, 81
Hotline, 5

I

Incremental signals, 32
Inputs/outputs
Overview, 680
Interconnecting signals using BICO technology, 676
Interconnection using BICO technology, 676
Intermediate stop
EPOS, 254, 264
IO controller, 619
IO device, 619
IO supervisor, 619
IRT, 624
Comparison with RT, 626
IRT, 624
IRT, 624

J

Jerk limitation, 239
Jog, 265
  EPOS, 265
JOG
  Jog, 271

K

Kinetic buffering, 166

L

LEDs
  For Sensor Module Cabinet SMC10, 91
  For Sensor Module Cabinet SMC20, 91
  on CU305 CAN Control Unit, 89
  on CU305 DP Control Unit, 89
  Sensor Module Cabinet SMC30, 92
License for Basic Functions, 422
License key, 686
Limit exceeded, 399
Limits
  Torque setpoint, 129

M

Main/supplementary setpoint, 278
Manufacturer-specific telegrams, 529
Maximum acceleration, 238
Maximum deceleration, 238
Maximum velocity, 237
Measuring sockets, 101
Message buffer, 403
Messages, 105
  External triggering, 111
Monitoring functions
  extended, 210
Motion Control with PROFIBUS, 574
Motion Monitoring, 334
Motorized potentiometer, 276
Multiturn encoder, 220

N

Node guarding, 69, 81

O

OFF3
  Torque limits, 196
Online operation with STARTER, 50
Operating hours counter, 202
Operation without an encoder
  Servo, 150
Overview of Safety Integrated functions, 336

P

p8604, 81
p8609, 81
p8641, 81
Parameter channel, 645
Parameterization
  using the BOP, 115
Parameterize
  with STARTER, 46
Parameters
  Categories, 655
  Types, 655
PFH value, 345
Pole position identification
  Servo, 162
Position controller, 227
  Monitoring functions, 228
Position tracking
  2-pole resolver, 32
  Load gear, 221
  Measuring gear, 220
Positioning monitoring, 228
Predefined connection set, 72
Probability of failure, 345
Probe
  Central, 573
Process data, 531
Process data, actual values
  G1_XIST1, 544, 564
  G1_XIST2, 544, 565
  G2_XIST1, 544, 567
  G2_XIST2, 544, 567
  NACT_A, 544, 550
  NACT_B, 544, 550
Process data, control words
  A_DIGITAL, 527, 570
  CU_STW, 569
  G1_STW, 532
  G2_STW, 532, 562
  G3_STW, 527
  Gn_STW, 559

MDI_ACC, 542
MDI_DEC, 542
MDI_MOD, 543
MDI_TARPOS, 542
MDI_VELOCITY, 542
MDIAcc, 532
MDIDec, 532
MDIMode, 532, 533
MDIPos, 532
MDIVel, 532
MT_STW, 570
Over, 533
OVERRIDE, 542
POS_STW, 539
POS_STW1, 533
POS_STW2, 533
PosSTW, 533
SATZANW, 532, 538
SI STW (PROFIsafe STW), 423, 425
STW1, 527, 532, 533
STW1 (positioning mode), 535
STW2, 527, 532, 536
Process data, setpoints
KPC, 527
MOMRED, 527, 533, 538
NSOLL_A, 527, 532, 537
NSOLL_B, 527, 532, 537
Process data, status words
AKTSATZ, 544
CU_ZSW, 571
E_DIGITAL, 572
G1_ZSW, 544
G2_ZSW, 544, 567
Gn_ZSW, 563
MELDW, 545, 551
MT_ZSW, 572
POS_ZSW, 554
PosZSW, 545
SI ZSW (PROFIsafe ZSW), 424, 426
XistP, 544
ZSW1, 544, 546
ZSW2, 544, 550
PROFIBUS, 592
Components, 38
Device identification, 593
Device master file, 593
Interface Mode, 531
Master class 1 and 2, 590
Motion Control with PROFIBUS, 574
Setting the address, 592
Sign of life, 601, 634
Slave-to-slave communication, 602
Telegrams, 528
Terminating resistor, 593
PROFIdrive, 522
Controller, Supervisor, Drive Unit, 522
read parameters, 584
Write parameter, 586
Profile velocity mode, 69
PROFINET
Data transfer, 618
PROFINET interface, 622
PROFINET IO, 618
Addresses, 620
IRT, 625
PROFINET IO with IRT, 617
PROFINET IO with RT, 617
PROFINET with 2 controllers, 635
PROFIsafe slot, 450
PROFIsafe with STARTER, 449
Project navigator, 21
Pulse/direction interface, 181

R

Ramp-function generator, 79
Ramp-function generator, extended, 283
Real-time communication, 617
Recorder, 97
Reference variables
Disabling/protecting, 189
Referencing
Basic positioning, 241
Residual risk, 351
Resolver
2-pole, 32
RT
Comparison with IRT, 626
RT class
Set, 626
RT classes
Send cycles, 627
Update cycles, 627

S

Safe Acceleration Monitor
SAM, 336
Safe Acceleration Monitor with encoder
SAM with encoder, 389
Safe actual value acquisition, 405
Safe Brake Control
SBC, 357

Safe Brake Ramp
SBR, 337, 391
Safe Brake Ramp without encoder
SBR without encoder, 391
Safe Direction, 394
With encoder, 394
Safe direction of motion, 394
Safe Operating Stop
SOS, 373, 374
Safe Speed Monitor
SSM, 382
Safe Stop 1
SS1, 355
time controlled, 355
Safe Stop 2
SS2, 370
Safely Limited Speed with encoder
SLS with encoder, 375
Safety Info Channel, 411
Safety Integrated
Change password, 438
Commissioning, 429
Password, 339
Safe brake control (SBC), 357
Safe Stop 1, 355
Safe Torque Off, 352
Series commissioning, 434
Safety Integrated Basic Functions
Stop responses, 359
Safety Integrated password, 339
Safety logbook, 467
Safety slot, 428
Safety Stop 1
SS1, 337
Safety terminals
Commissioning, 436
Safety with an encoder, 336
Safety without an encoder
Safety encoderless, 337
Sampling times, 684
SBC
Safe Brake Control, 357
SBC (Basic Function)
Acceptance test, 479
SBC without encoder
Acceptance test, 513
SDI, 394
With encoder, 394
Without encoder, 396
Series commissioning, 434
Servo
Automatic controller setting, 148
Operation without an encoder, 150
Vdc control, 166
Servo control, 123
Activate setpoint channel, 269
Current controller, 134
Optimization, 147
Speed controller, 123
Torque setpoint, 129
Torque-controlled operation, 127
Travel to fixed stop, 170
V/f control, 144
Servo current controller
Closed-loop current control, 134
Current and torque limitation, 134
Current controller adaptation, 134
Setpoint channel
Direction of rotation limiting, 280
Direction reversal, 280
extended, 269
Fixed speed setpoints, 275
Jog, 271
Main/supplementary setpoint, 278
Motorized potentiometer, 276
Ramp-function generator, extended, 283
Servo amplifier, 269
Setpoint limitation, 281
Setpoint modification, 278
Suppression bandwidths, 281
with, 79
without, 79
Setpoint modification, 278
Setpoint sources, 270
Shared device, 635
SIC
see Safety Info Channel, 411
Signal recording with the trace function, 93
SINAMICS drive unit, 450
Single-encoder system, 405
Singleturn absolute encoder, 32
Singleturn encoder, 220
Slave-to-slave communication
PROFIBUS, 602
SLS
Safely Limited Speed, 375
SLS with encoder (STOP C)
Acceptance test, 498
SLS with encoder (STOP D)
Acceptance test, 504
SLS without encoder (STOP A)
Acceptance test, 514
SLS without encoder (STOP B), 517
SMI replacement

DQI replacement, 683
Sockets for measurement, 101
Software limit switches, 238
SOS
Acceptance test, 489
Safe Operating Stop, 373
Speed controller
Limitations, 123
Properties, 123
Speed controller adaptation, 125
Speed setpoint filter, 124
SS1
Safe Stop 1, 355
SS1 (time controlled)
Safe Stop 1, 355
SS1 with encoder
Acceptance test, 483
SS1 without encoder
Acceptance test, 511
SS1, time and acceleration controlled (Basic Function)
Acceptance test, 477
SS2
Acceptance test, 486
SSI encoder, 32
Incremental signals, 32
SSM
Acceptance test, 507
Safe Speed Monitor, 382
Standard telegrams, 528
STARTER, 449
Connection via serial interface, 40
Important functions, 47
Online operation via PROFIBUS, 50
STARTER toolbars
display, 48
STO
Safe Torque Off, 352
STO (Basic Function)
Acceptance test, 475
STO with encoder
Acceptance test, 481
STO without encoder
Acceptance test, 509
STOP A, 492
STOP B, 495
STOP C, 498
Stop cam, 239
STOP D, 501, 504
STOP E, 399
STOP F, 359, 399
Stop response
Stop A, 359
Stop F, 359
Stop responses, 359
Priorities vis-à-vis Extended Functions, 401
Priority classes, 400
Support, 5
Switches for PROFIBUS address, 592
Switching on inhibited, 546, 548
Switchover
Fixed speed setpoints, 275
Synchronization domain, 627
Synchronous motors
External armature short-circuit, 193
Internal armature short-circuit, 193
System runtime, 202
System sampling times, 684

T

T0, T1, 101
Technology controller, 205
Telegram 111
POS_ZSW1, 555
POS_ZSW2, 557
Telegram 371
STW1, 533
Telegram 700, 411
Telegrams
Layout, 531
Manufacturer-specific, 529
Standard, 528
User-defined, 529
Temperature sensors
SINAMICS components, 33
Test of switch-off signal paths, 361
Test stop, 409
Test stop modes, 441
Timer for forced dormant error detection interval, 441
Tools
STARTER, 46
Torque limits
OFF3, 196
Torque setpoint, 129
Torque-controlled operation, 127
Trace, 97
Trace function, 97
Signal recording, 93
Travel to fixed stop, 170
Traversing blocks, 252
Traversing task
Reject, 254, 264

U

Unit changeover, 187
Update, 627
User interface, 21

V

V/f control
    Servo control, 144
Vdc control
    Servo, 166
Vdc_min control
    Servo, 167
Voltage boost
    Servo, 146
Voltage protection
    Internal, 193

W

WARN_CODE, 557
Working area, 21

Siemens AG
Industry Sector
Drive Technologies
Motion Control Systems
P.O. Box 3180
91050 ERLANGEN
GERMANY

www.siemens.com/motioncontrol

Subject to change
© Siemens AG, 2011