SIPROTEC

Differential Protection 7UT613/63x

V4.60

Manual

Preface

Introduction 1

Functions 2

Mounting and Commissioning 3

Technical Data 4

Appendix A

Literature

Glossary

Index

C53000-G1176-C160-2

Disclaimer of Liability

We have checked the text of this manual for conformity with the hardware and software described. However, since deviations cannot be ruled out entirely, we do not accept liability for complete conformity or for any any errors or omissions.

The information given in this document is reviewed regularly and any necessary corrections will be included in subsequent editions. We appreciate any suggestions for improvement.

We reserve the right to make technical improvements without notice.

Copyright

Copyright© Siemens AG 2006. All rights reserved.

The reproduction, transmission or use of this document or its contents is not permitted without express written authority. Offenders will be liable for damages. All rights reserved, particularly for the purposes of patent application or trademark registration.

Registered Trademarks

SIPROTEC, SINAUT, SICAM and DIGSI are registered trademarks of SIEMENS AG. Other designations in this manual might be trademarks whose use by third parties for their own purposes would infringe the rights of the owner.

Document Version: 4.60.04

Preface

Purpose of this Manual

This manual describes the functions, operation, installation, and commissioning of the 7UT613/63x devices. In particular, one will find:

- Information regarding the configuration of the device and descriptions of device functions and settings → Chapter 2;
- Instruction for mounting and commissioning → Chapter 3,
- List of technical data → Chapter 4;
- As well as a compilation of the most significant data for experienced users → Appendix A.

General information about design, configuration, and operation of SIPROTEC 4 devices are laid down in the SIPROTEC 4 System Description /1/.

Target Audience

Protection engineers, commissioning engineers, personnel concerned with adjustment, checking, and service of selective protective equipment, automatic and control facilities, and personnel of electrical facilities and power plants.

Applicability of this Manual

This manual is valid for: SIPROTEC 4 Differential Protection 7UT613/63x; firmware version V4.60.

Indication of Conformity

CE	This product complies with the directive of the Council of the European Communities on the approximation of the laws of the Member States relating to electromagnetic compatibility (EMC Council Directive 89/336/EEC) and concerning electrical equipment for use within specified voltage limits (Low-voltage directive 73/23 EEC). This conformity has been proved by tests conducted by Siemens AG in accordance with Article 10 of the Council Directive in agreement with the generic standards EN 61000-6-2 and EN 61000-6-4 (for EMC directive) and the standard EN 60255-6 (for low-voltage directive). This device was designed and produced for industrial use. The product conforms to the international standards of the series IEC 60255 and the German standard VDE 0435.

Further Standards

IEEE Std C37.90-*

This product is UL-certified according to the Technical Data:

c UL us LISTED — IND. CONT. EQ. 69CA

c TÜV us — IND. CONT. EQ.

Additional Support

Should further information on the SIPROTEC 4 System be desired or should particular problems arise which are not covered sufficiently for the purchaser's purpose, the matter should be referred to the local Siemens representative.

Training Courses

Individual course offerings may be found in our Training Catalogue, or questions may be directed to our training centre in Nuremberg.

Instructions and Warnings

The warnings and notes contained in this manual serve for your own safety and for an appropriate lifetime of the device. Please observe them!
The following indicators and standard definitions are used:

DANGER

indicates that death, severe personal injury or substantial property damage will result if proper precautions are not taken.

Warning

indicates that death, severe personal injury or substantial property damage can result if proper precautions are not taken.

Caution

indicates that minor personal injury or property damage can result if proper precautions are not taken. This particularly applies to damage on or in the device itself and consequential damage thereof.

Note

indicates information about the device or respective part of the instruction manual which is essential to highlight.



WARNING!

When operating an electrical device, certain parts of the device inevitably have dangerous voltages.

Death, severe personal injury or substantial property damage can result if the device is not handled properly.

Only qualified personnel shall work on and around this equipment. It must be thoroughly familiar with all warnings and safety notices of this manual as well as with the applicable safety regulations.

The successful and safe operation of this device is dependent on proper handling, installation, operation, and maintenance by qualified personnel under observance of all warnings and hints contained in this manual.

Of particular importance are the general installation and safety regulations for work in a high-voltage environment (for example, ANSI, IEC, EN, DIN, or other national and international regulations). These regulations must be observed.

Definition

QUALIFIED PERSONNEL

For the purpose of this instruction manual and product labels, a qualified person is one who is familiar with the installation, construction and operation of the equipment and the hazards involved. In addition, he has the following qualifications:

- Is trained and authorized to energize, de-energize, clear, ground and tag circuits and equipment in accordance with established safety practices.
- Is trained in the proper care and use of protective equipment in accordance with established safety practices.
- Is trained in rendering first aid.

Typographic and Graphical Conventions

To designate terms which refer in the text to information of the device or for the device, the following fonts are used:

`Parameter names`

Designators of configuration or function parameters which may appear word-for-word in the display of the device or on the screen of a personal computer (with DIGSI), are marked in bold letters of a monospace font. The same goes for the titles of menus.

`1234A`

Parameter addresses have the same character style as parameter names. Parameter addresses in overview tables contain the suffix **A**, if the parameter is only available using the option **Display additional settings**.

`Parameter Conditions`

Possible settings of text parameters, which may appear word-for-word in the display of the device or on the screen of a personal computer (with operation software DIGSI), are additionally written in italics. The same goes for the options of the menus.

„`Annunciations“`

Designators for information, which may be output by the relay or required from other devices or from the switch gear, are marked in a monospace type style in quotation marks.

Deviations may be permitted in drawings and tables when the type of designator can be obviously derived from the illustration.

The following symbols are used in drawings:

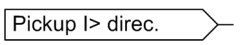

Device-internal logical input signal

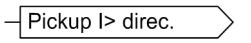

Device-internal (logical) output signal



Internal input signal of an analog quantity

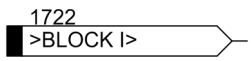

External binary input signal with number (binary input, input indication)

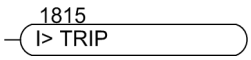

External binary output signal with number (device indication)

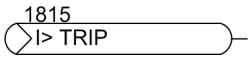

External binary output signal with number (device indication) used as input signal

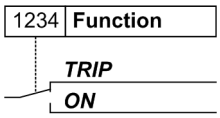

Example of a parameter switch designated **FUNCTION** with the address 1234 and the possible settings ON and OFF

Besides these, graphical symbols are used according to IEC 60617-12 and IEC 60617-13 or symbols derived from these standards. Some of the most frequently used are listed below:

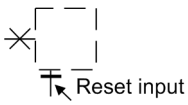

Input signal of an analog quantity

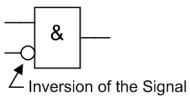

AND gate

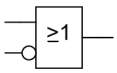

OR gate

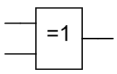

Exclusive OR (antivalence): output is active, if only **one** of the inputs is active

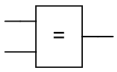

Coincidence gate (equivalence): output is active if **both** inputs are active or inactive at the same time

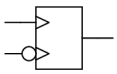

Dynamic inputs (edge–triggered) above with positive, below with negative edge

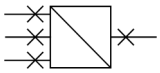

Formation of one analog output signal from a number of analog input signals

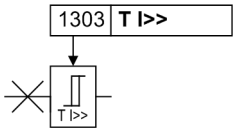

Limit stage with setting address and parameter designator (name)

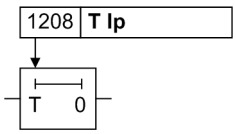

Timer (pickup delay T, example adjustable) with setting address and parameter designator (name)

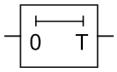

Timer (dropout delay T, example non-adjustable)

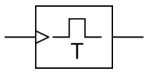

Dynamic triggered pulse timer T (monoflop)

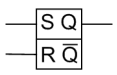

Static memory (RS-flipflop) with setting input (S), resetting input (R), output (Q) and inverted output ($\overline{Q}$)

■

Contents

1 Introduction 17

1.1 Overall Operation 18

1.2 Application Scope 21

1.3 Characteristics 23

2 Functions 31

2.1 General 33
2.1.1 Device 34
2.1.1.1 Setting Notes 34
2.1.1.2 Settings 34
2.1.1.3 Information List 34
2.1.2 EN100-Modul 1 35
2.1.2.1 Function Description 35
2.1.2.2 Setting Notes 35
2.1.2.3 Information List 36
2.1.3 Configuration of the Functional Scope 36
2.1.3.1 Setting Notes 36
2.1.3.2 Settings 43
2.1.4 Power System Data 1 45
2.1.4.1 Topology of the Protected Object 45
2.1.4.2 General Power System Data (Power System Data 1) 65
2.1.4.3 Assignment of Protection Functions to Measuring Locations / Sides 79
2.1.4.4 Circuit Breaker Data 83
2.1.4.5 Settings 84
2.1.4.6 Information List 96
2.1.5 Setting Groups 96
2.1.5.1 Setting Groups 96
2.1.5.2 Setting Notes 97
2.1.5.3 Settings 97
2.1.5.4 Information List 97
2.1.6 Power System Data 2 97
2.1.6.1 Setting Notes 97
2.1.6.2 Settings 100
2.1.6.3 Information List 101

2.2 Differential Protection . . . 104
2.2.1 Functional Description of the Differential Protection . . . 104
2.2.2 Differential Protection for Transformers . . . 113
2.2.3 Differential Protection for Generators, Motors, and Series Reactors . . . 121
2.2.4 Differential Protection for Shunt Reactors . . . 122
2.2.5 Differential Protection for Mini-Busbars and Short Lines . . . 123
2.2.6 Single-phase Differential Protection for Busbars . . . 124
2.2.7 Setting Notes . . . 129
2.2.8 Settings . . . 135
2.2.9 Information List . . . 136

2.3 Restricted Earth Fault Protection . . . 138
2.3.1 Application Examples . . . 138
2.3.2 Function Description . . . 141
2.3.3 Setting Notes . . . 147
2.3.4 Settings . . . 149
2.3.5 Information List . . . 149

2.4 Time Overcurrent Protection for Phase and Residual Currents . . . 150
2.4.1 General . . . 150
2.4.1.1 Definite Time, Instantaneous Overcurrent Protection (UMZ) . . . 150
2.4.1.2 Inverse Time Overcurrent Protection . . . 154
2.4.1.3 Manual Close Command . . . 158
2.4.1.4 Dynamic Cold Load Pickup . . . 158
2.4.1.5 Inrush Restraint . . . 159
2.4.1.6 Fast Busbar Protection Using Reverse Interlocking . . . 160
2.4.2 Time Overcurrent Protection for Phase Currents . . . 161
2.4.2.1 Setting Notes . . . 161
2.4.2.2 Settings . . . 169
2.4.2.3 Information List . . . 171
2.4.3 Time Overcurrent Protection for Residual Current . . . 172
2.4.3.1 Setting Notes . . . 172
2.4.3.2 Settings . . . 176
2.4.3.3 Information List . . . 178

2.5 Time Overcurrent Protection for Earth Current . . . 179
2.5.1 General . . . 179
2.5.2 Definite Time, Instantaneous Overcurrent Protection (UMZ) . . . 179
2.5.3 Inverse Time Overcurrent Protection . . . 181
2.5.4 Manual Close Command . . . 183
2.5.5 Dynamic Cold Load Pickup . . . 183
2.5.6 Inrush Restraint . . . 183
2.5.7 Setting Notes . . . 184
2.5.8 Settings . . . 188
2.5.9 Information List . . . 189

2.6 Dynamic Cold Load Pickup for Time Overcurrent Protection . . . 191
2.6.1 Function Description . . . 191
2.6.2 Setting Notes . . . 193
2.6.3 Settings . . . 194
2.6.4 Information List . . . 195

2.7 Single-Phase Time Overcurrent Protection . . . 196
2.7.1 Function Description . . . 196
2.7.2 High-impedance Differential Protection . . . 198
2.7.3 Tank Leakage Protection . . . 200
2.7.4 Setting Notes . . . 200
2.7.5 Settings . . . 205
2.7.6 Information List . . . 205

2.8 Unbalanced Load Protection . . . 206
2.8.1 Function Description . . . 206
2.8.2 Setting Notes . . . 212
2.8.3 Settings . . . 218
2.8.4 Information List . . . 219

2.9 Thermal Overload Protection . . . 220
2.9.1 General . . . 220
2.9.2 Overload Protection Using a Thermal Replica . . . 220
2.9.3 Overload protection using a thermal replica with ambient temperature influence . . . 223
2.9.4 Hot-Spot Calculation and Determination of the Ageing Rate . . . 223
2.9.5 Setting Notes . . . 226
2.9.6 Settings . . . 230
2.9.7 Information List . . . 231

2.10 RTD-Boxes for Overload Detection . . . 232
2.10.1 Function Description . . . 232
2.10.2 Setting Notes . . . 232
2.10.3 Settings . . . 233
2.10.4 Information List . . . 237

2.11 Overexcitation Protection . . . 239
2.11.1 Function Description . . . 239
2.11.2 Setting Notes . . . 241
2.11.3 Settings . . . 243
2.11.4 Information List . . . 244

2.12 Reverse Power Protection . . . 245
2.12.1 Function Description . . . 245
2.12.2 Setting Notes . . . 246
2.12.3 Settings . . . 249
2.12.4 Information List . . . 249

2.13 Forward Power Supervision. 250
2.13.1 Function Description 250
2.13.2 Setting Notes 251
2.13.3 Settings 253
2.13.4 Information List 254

2.14 Undervoltage Protection 255
2.14.1 Function Description 255
2.14.2 Setting Notes 256
2.14.3 Settings 257
2.14.4 Information List 257

2.15 Overvoltage Protection 259
2.15.1 Function Description 259
2.15.2 Setting Notes 260
2.15.3 Settings 261
2.15.4 Information List 262

2.16 Frequency Protection. 263
2.16.1 Function Description 263
2.16.2 Setting Notes 265
2.16.3 Settings 266
2.16.4 Information List 267

2.17 Circuit Breaker Failure Protection 268
2.17.1 Function Description 268
2.17.2 Setting Notes 272
2.17.3 Settings 274
2.17.4 Information List 275

2.18 External Trip Commands 276
2.18.1 Function Description 276
2.18.2 Setting Notes 277
2.18.3 Settings 277
2.18.4 Information List 278

2.19	Monitoring Functions	279
2.19.1	Measurement Supervision	279
2.19.1.1	Hardware Monitoring	279
2.19.1.2	Software Monitoring	280
2.19.1.3	Monitoring of Measured Quantities	280
2.19.1.4	Setting Notes	285
2.19.1.5	Settings	286
2.19.1.6	Information List	287
2.19.2	Trip Circuit Supervision	288
2.19.2.1	Function Description	288
2.19.2.2	Setting Notes	291
2.19.2.3	Settings	291
2.19.2.4	Information List	291
2.19.3	Malfunction Responses of the Device	291
2.19.3.1	Summary of the most important Monitoring Functions	292
2.19.4	Parameterisation Error	293
2.20	Protection Function Control	294
2.20.1	Pickup Logic for the Entire Device	294
2.20.1.1	General Device Pickup	294
2.20.2	Tripping Logic for the Entire Device	295
2.20.2.1	General Tripping	295
2.21	Disconnection of Measuring Locations	297
2.21.1	Functional Description	297
2.21.2	Information List	299

2.22 Additional Functions . . . 300
2.22.1 Processing of Messages . . . 300
2.22.1.1 General . . . 300
2.22.1.2 Operational Annunciations (Buffer: Event Log) . . . 302
2.22.1.3 Fault Annunciations (Buffer: Trip Log) . . . 302
2.22.1.4 Spontaneous Annunciations . . . 302
2.22.1.5 General Interrogation . . . 303
2.22.1.6 Switching Statistics . . . 303
2.22.2 Measurement . . . 303
2.22.2.1 Display and Transmission of Measured Valuables . . . 303
2.22.2.2 Settings . . . 307
2.22.2.3 Information List . . . 307
2.22.3 Thermal Measurement . . . 310
2.22.3.1 Description . . . 310
2.22.3.2 Information List . . . 311
2.22.4 Differential and Restraining Measured Values . . . 312
2.22.4.1 Function Description . . . 312
2.22.4.2 Information List . . . 313
2.22.5 Set Points for Measured Values . . . 313
2.22.5.1 User Defined Set-Points . . . 313
2.22.6 Energy Metering . . . 314
2.22.6.1 Energy Metering . . . 314
2.22.6.2 Information List . . . 315
2.22.7 Flexible Function . . . 315
2.22.7.1 Function Description . . . 315
2.22.7.2 Setting Notes . . . 317
2.22.7.3 Settings . . . 321
2.22.7.4 Information List . . . 324
2.22.8 Oscillographic Fault Recording . . . 325
2.22.8.1 Function Description . . . 325
2.22.8.2 Setting Notes . . . 326
2.22.8.3 Settings . . . 326
2.22.8.4 Information List . . . 327
2.22.9 Commissioning Aids . . . 327
2.22.9.1 Web Monitor . . . 327

2.23 Average Values, Minimum and Maximum Values . . . 329
2.23.1 Demand Measurement Setup . . . 330
2.23.1.1 Setting Notes . . . 330
2.23.1.2 Settings . . . 330
2.23.2 Min/Max Measurement Setup . . . 330
2.23.2.1 Setting Notes . . . 330
2.23.2.2 Settings . . . 331
2.23.2.3 Information List . . . 331

2.24 Command Processing . . . 332
2.24.1 Control Authorization . . . 332
2.24.1.1 Type of Commands . . . 332
2.24.1.2 Sequence in the Command Path . . . 333
2.24.1.3 Interlocking . . . 334
2.24.1.4 Recording and Acknowledgement of Commands . . . 337
2.24.1.5 Information List . . . 338

3 Mounting and Commissioning 339

3.1 Mounting and Connections 340
3.1.1 Configuration Information 340
3.1.2 Hardware Modifications 345
3.1.2.1 General 345
3.1.2.2 Disassembly 346
3.1.2.3 Switching Elements on Printed Circuit Boards 350
3.1.2.4 Interface Modules 364
3.1.2.5 Reassembly 369
3.1.3 Mounting 369
3.1.3.1 Panel Flush Mounting 369
3.1.3.2 Rack and Cubicle Mounting 370
3.1.3.3 Panel Surface Mounting 372
3.1.3.4 Removing the Transport Protection 373

3.2 Checking Connections 374
3.2.1 Checking Data Connections of Serial Interfaces 374
3.2.2 Checking the System Connections 377

3.3 Commissioning 379
3.3.1 Test Mode / Transmission Block 380
3.3.2 Test Time Synchronisation Interface 380
3.3.3 Testing the System Interface 381
3.3.4 Checking the switching states of the binary Inputs/Outputs 383
3.3.5 Checking the Setting Consistency 385
3.3.6 Secondary Check 389
3.3.7 Circuit Breaker Failure Protection Tests 395
3.3.8 Symmetrical, Primary Current Tests on the Protected Object 397
3.3.9 Zero Sequence Current Tests on the Protected Object 404
3.3.10 Current Tests for Busbar Protection 409
3.3.11 Checking for the Non-assigned Single-phase Current Inputs 411
3.3.12 Checking the Voltage Connections and Polarity Check 412
3.3.13 Testing User-defined Functions 417
3.3.14 Stability Check and Triggering Oscillographic Recordings 418

3.4 Final Preparation of the Device 420

4 Technical Data 421

4.1 General 422
4.1.1 Analogue Inputs 422
4.1.2 Auxiliary Voltage 422
4.1.3 Binary Inputs and Outputs 423
4.1.4 Frequency Measurement via the Positive Phase-sequence Voltage U1 424
4.1.5 Communications Interfaces 425
4.1.6 Electrical Tests 430
4.1.7 Mechanical Tests 432
4.1.8 Climatic Stress Test 432
4.1.9 Service Conditions 433
4.1.10 Constructional Details 434
4.2 Differential Protection 435
4.3 Restricted earth fault protection 441
4.4 Time Overcurrent Protection for Phase and Residual Currents 442
4.5 Time Overcurrent Protection for Earth Current (Starpoint Current) 453
4.6 Dynamic Cold Load Pickup for Time Overcurrent Protection 455
4.7 Single-Phase Time Overcurrent Protection 456
4.8 Unbalanced Load Protection 457
4.9 Thermal Overload 465
4.10 RTD Boxes for Overload Detection 468
4.11 Overload Protection 469
4.12 Reverse Power Protection 471
4.13 Forward active power supervision 472
4.14 Undervoltage Protection 474
4.15 Overvoltage Protection (ANSI 59) 475
4.16 Frequency Protection 476
4.17 Circuit Breaker Failure Protection 478
4.18 External Trip Commands 479
4.19 Monitoring Functions 480
4.20 User-defined Functions (CFC) 481
4.21 Flexible Protection Functions 485
4.22 Additional Functions 487

4.23 Dimensions . . . 491
4.23.1 Panel Surface Mounting (Enclosure Size $^1/_2$) . . . 491
4.23.2 Panel Surface Mounting (Enclosure Size $^1/_1$) . . . 491
4.23.3 Panel Surface and Cabinet Mounting (Enclosure Size $^1/_2$) . . . 492
4.23.4 Panel Surface and Cabinet Mounting (Enclosure Size $^1/_1$) . . . 493
4.23.5 RTD box . . . 494

A Appendix . . . 495

A.1 Ordering Information and Accessories . . . 496
A.1.1 Ordering Information . . . 496
A.1.1.1 Differential Protection 7UT613 for 3 Measuring Locations . . . 496
A.1.1.2 Differential Protection 7UT633 and 7UT635 for 3 to 5 measuring locations . . . 499
A.1.2 Accessories . . . 502

A.2 Terminal Assignments . . . 505
A.2.1 Panel Flush and Cubicle Mounting . . . 505
A.2.2 Panel Surface Mounting . . . 514

A.3 Connection Examples . . . 523
A.3.1 Current Transformer Connection Examples . . . 523
A.3.2 Voltage Transformer Connection Examples . . . 536
A.3.3 Assignment of Protection Functions to Protected Objects . . . 538

A.4 Current Transformer Requirements . . . 539
Current Transformer in accordance with BS 3938/IEC 60044-1 (2000) . . . 540
Current Transformer in accordance with ANSI/IEEE C 57.13 . . . 540

A.5 Default Settings . . . 543
A.5.1 LEDs . . . 543
A.5.2 Binary Input . . . 543
A.5.3 Binary Output . . . 543
A.5.4 Function Keys . . . 544
A.5.5 Default Display . . . 545
A.5.6 Pre-defined CFC Charts . . . 547

A.6 Protocol-dependent Functions . . . 548

A.7 Functional Scope . . . 549

A.8 Settings . . . 552

A.9 Information List . . . 582

A.10 Group Alarms . . . 615

A.11 Measured Values . . . 617

Literature **631**

Glossary **623**

Index **633**

Introduction 1

Differential ProtectionThe SIPROTEC 4 device 7UT613/63x is introduced in this chapter. You are presented with an overview of the scope of application, the properties and functional scope of the 7UT613/63x.

1.1	Overall Operation	18
1.2	Application Scope	21
1.3	Characteristics	23

1.1 Overall Operation

The digital differential protection devices SIPROTEC 4 7UT613/63x are equipped with a powerful microprocessor system. This provides fully numerical processing of all functions in the device, from the acquisition of the measured values up to the output of commands to the circuit breakers

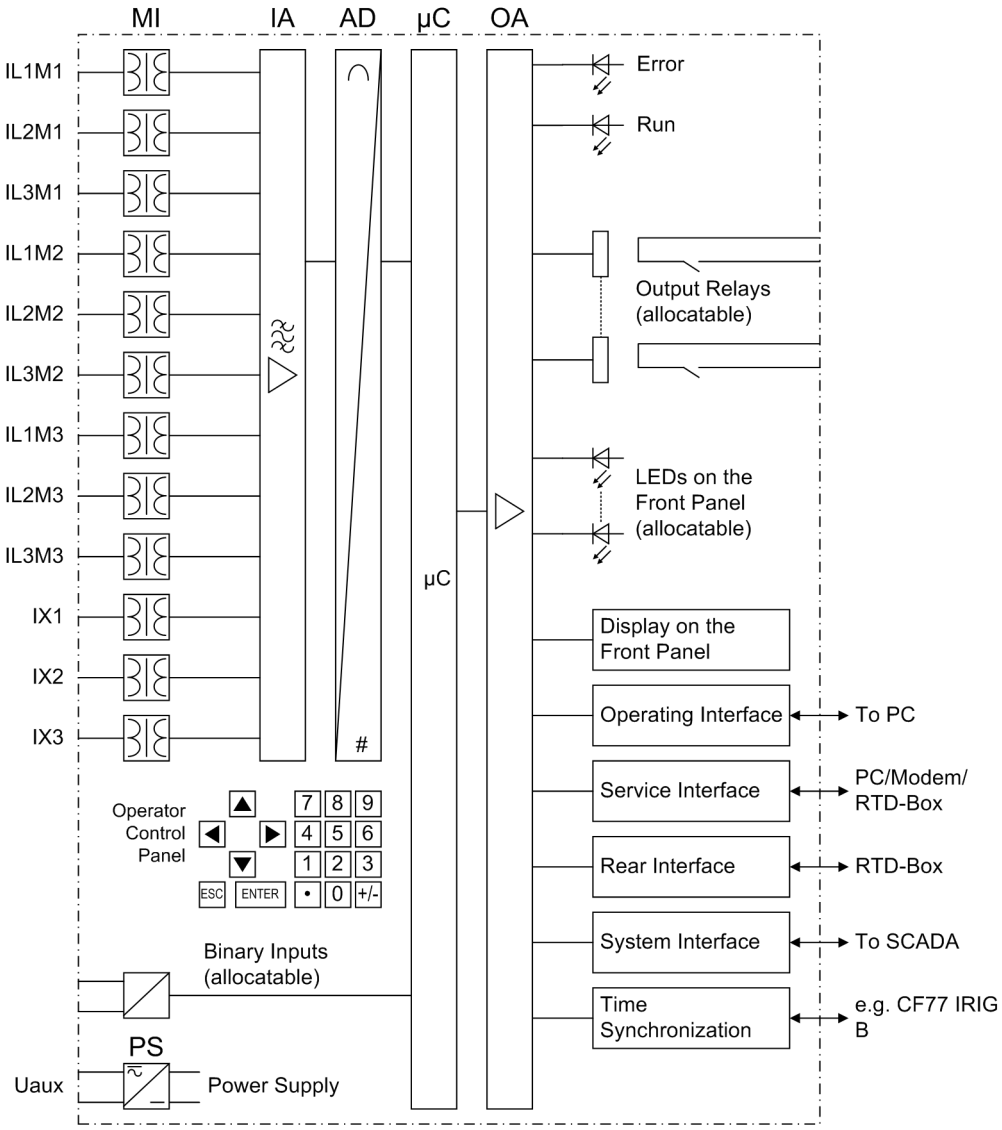

Figure 1-1 Hardware structure of the digital differential current protection relay 7UT613/63x — Example of a 7UT613 for a three-winding transformer with measuring locations M1, M2 and M3, with 3 auxiliary 1-phase inputs X1, X2 and X3

Analogue Inputs

The analogue inputs (AI) transform the currents and voltages derived from the instrument transformers and match them to the internal signal levels for processing in the device. Depending on the version, the device features between 12 current inputs (7UT613/7UT633) and 16 current inputs (7UT635). Three current inputs are provided for the input of the phase currents at each end of the protected zone (= measuring points), further measuring inputs (= additional inputs) may be used for any desired current, e.g. the earth current measured between the starpoint of a transformer winding

and earth, or other single-phase measuring currents. One or two additional inputs can be designed for highly sensitive current detection, This, for example, allows the detection of small tank leakage currents of power transformers or - with an external series resistor - the detection of a voltage (e.g. for high-impedance unit protection).

The versions 7UT613 and 7UT633 can be ordered with 4 additional voltage inputs. 3 of these inputs can be connected to the phase-to-earth voltages. Another voltage input can be used for a single-phase voltage, such as a displacement voltage or any other voltage. In principle, the differential protection is designed such that it can operate without measured voltages. However, the integrated overexcitation protection uses the measuring voltage to calculate the induction in transformers or shunt reactors. In addition, the measuring voltages and the quantities derived from them (induction, power, power factor) can be displayed, annunciated and/or monitored by the device if the voltages are connected.

The analogue signals are then routed to the input amplifier group “IA”.

The input amplifier group IA provides high-resistance termination for the analogue input quantities and contains filters that are optimised for measured value processing with regard to bandwidth and processing speed.

The analogue-to-digital (AD) stage consists of a multiplexor, an analogue-to-digital (A/D) converter and memory components for the transmission of digital signals to the microcomputer system.

Microcomputer system

In addition to the control of the measured values, the actual protection and control functions are processed in the μC microcomputer system. In particular, the following is included:

- filtering and conditioning of measured signals
- continuous monitoring of measured signals
- monitoring of the pickup conditions of the individual protective functions
- Conditioning of the measured signals: i.e. conversion of currents according to the connection group of the protected transformer (when used for transformer differential protection) and matching of the current amplitudes.
- formation of the differential and restraint quantities
- calculation of the RMS values of the currents for overload detection and adjustment of the temperature rise of the protected object
- retrieval of threshold values and time sequences
- processing of signals for the logic functions
- Processing User-defined Logic Functions
- reaching trip command decisions
- Check of control commands and output to switching devices
- storage of indications, fault data and fault values for fault analysis purposes
- Calculation and display/annunciation of measured values and the quantities derived from them
- management of the operating system and its functions, e.g. data storage, real-time clock, communication, interfaces, etc.

The information is provided via output amplifier OA.

Binary Inputs and Outputs

Binary inputs and outputs from and to the computer system are routed via the I/O modules (inputs and outputs). The computer system obtains the information from the system (e.g remote resetting) or from other devices (e.g. blocking commands). These outputs include, in particular, trip commands to switchgear and signals for remote annunciation of important events and conditions.

Front Elements

Devices with operator panel have light emitting diodes (LEDs) and a display screen (LCD) on the front panel to provide information such as measured values, messages related to events or faults, status, and functional status..

Integrated control and numeric keys in conjunction with the LCD facilitate local interaction with the 7UT6. All information of the device can be accessed using the integrated control and numeric keys. The information includes protective and control settings, operating and fault messages, and measured values.

In addition, control of circuit breakers and other equipment is possible from the 7UT6 front panel.

Version 7UT613 provides a 4-line LC display in front, while versions 7UT633 and 7UT635 have a graphic display. The latter also has a key switch and a control key for on-site control of the device.

Serial interfaces

Via the serial **operator** interface in the front panel, communication with a personal computer using the operating program DIGSI is possible. This facilitates a comfortable handling of all device functions.

A serial **service** interface can likewise make communication via PC with the device possible by using DIGSI. This port is especially well suited for the fixed wiring of the devices to the PC or operation via a modem.

All data can be transferred to a central control or monitoring system via the serial **system port.** This interface may be provided with various protocols and physical transmission schemes to suit the particular application.

A further interface is provided for the **time synchronization** of the internal clock via external synchronization sources.

Further communication protocols can be realized via additional interface modules.

The **service** port, or an optional **additional** interface, can also be used to connect a RTD-Box (= resistance temperature detector) for entering external temperatures (e.g. for overload protection).

Power Supply

The functional units described are supplied by a power supply PS with the necessary power in the different voltage levels. Transient dips of the supply voltage, which may occur during short-circuit in the power supply system, are bridged by a capacitor (see also Technical Data).

1.2 Application Scope

The numerical differential protection SIPROTEC 4 7UT613/63x is a fast and selective short-circuit protection for transformers of all voltage levels, for rotating machines, for series and shunt reactors, or for short lines and mini-busbars with 2 to 5 feeders (depending on the version). It can also be used as a single-phase protection for busbars with up to 9 or 12 feeders (depending on the version). The individual application can be configured, which ensures optimum matching to the protected object.

The device is also suited for two-phase connection for use in systems with 16.7 Hz rated frequency.

A major advantage of the differential protection principle is the instantaneous tripping in the event of a short-circuit at any point within the entire protected zone. The current transformers limit the protected zone at the ends towards the network. This rigid limit is the reason why the differential protection scheme shows such an ideal selectivity.

For use as transformer protection, the 7UT613/63x is normally connected to the current transformer sets which limit the power transformer windings against the remainder of the system. The phase displacement and the interlinkage of the currents due to the winding connection of the transformer are matched in the device by calculation algorithms. The earthing conditions of the starpoint(s) can be adapted to the user's requirements and are automatically considered in the matching algorithms. Also, the currents from multiple measuring points on one side of the protected object can be combined.

For use as generator or motor protection, the 7UT613/63x compares the currents in the starpoint leads of the machine and at its terminals. Similar applies for series reactors.

Short lines or mini-busbars with 3 to 5 end or feeders (depending on the version) can be protected as well. "Short" means that the current transformers lead between the CTs and the device do not form an impermissible burden for the CTs.

For transformers, generators, motors, or shunt reactors with earthed starpoint, the current between the starpoint and earth can be measured and used for highly sensitive earth fault protection.

The 9 or 12 measured current inputs (depending on the version) of the device allow for a single-phase protection for busbars with up to 9 or 12 feeders. One 7UT613/63x is used per phase in this case. Alternatively, (external) summation transformers can be installed in order to allow a busbar protection for up to 9 or 12 feeders with one single 7UT613/63x relay.

Where not all analog measuring inputs are needed for the measured values of the protected object, the remaining inputs can be used for other, independent measurement or protection tasks. If a 7UT635 (with 3 three-phase measuring inputs) is used, for instance, on a three-winding transformer, the two remaining measuring inputs can be used for overcurrent protection of a different protected object, e.g. the auxiliaries system circuit.

One or two additional current inputs designed for very high sensitivity are also available. They may be used e.g. for detection of small leakage currents between the tank of transformers or reactors an earth, thus recognising even high-resistance faults. High-resistance voltage measurement is also possible using an external series resistor.

For transformers (including auto-transformers), generators, and shunt reactors, a high-impedance unit protection system can be formed using high-impedance earth fault protection. In this case, the currents of all current transformers (of equal design)

at the ends of the protected zone feed a common (external) high-ohmic resistor The current in this resistor is measured using a high-sensitive current input 7UT613/63x.

The device provides backup time overcurrent protection functions for all types of protected objects. The functions can be enabled for any side or measuring location.

A thermal overload protection function is available for any type of machine. The functions can be enabled for any side. External detectors account for the coolant temperature (by means of an external RTD-box). This allows to calculate and output the hot-spot temperature and the relative ageing rate.

An unbalanced load protection function is provided for the detection of unsymmetrical currents. Phase failures and negative sequence currents, which are especially dangerous for rotating machines, can thus be detected.

Performance functions allow devices with voltage measuring inputs to implement a reverse power protection or monitor the forward power supply(in the power station sector). In the system they can be used for network decoupling. Power results and their components can be emitted as measured values.

The versions with voltage inputs are provided with an integrated overexcitation protection for the detection of excessive induction states in shunt reactions (transformers, shunt reactors). This protection function monitors the ratio U/f, which is proportional to the induction B in the iron core. An imminent iron core saturation, which can occur especially in power stations following (full) load shutdown and/or frequency reduction, is thus detected.

An undervoltage and overvoltage protection is to be integrated into devices with voltage measuring inputs. A 4-stage frequency protection monitors the frequency from the measured voltages.

A version for two-phase application is available for traction supply (transformers or generators) which provides all functions suited for this application (differential protection, restricted earth fault protection, overcurrent protection, overload protection).

With 7UT613/63x two circuit-breaker failure protection functions can be realised. A circuit-breaker failure protection checks the reaction of one circuit breaker after a trip command. It can be assigned to any of the sides of a protected object.

More protection, supervision and measuring functions can be configured with flexible functions. Up to 12 of these functions can be specified; the measured quantities you want to process and which reactions the device is to trigger when under/overshooting adjustable limit values. With that you can create time overcurrent protection and process voltages, power or symmetrical components of measured quantities.

One can configure the calculation of minimum, maximum and/or average values and/or minimum, maximum of the average values of up to 20 selectable measured quantities, thus receiving one's own statistical data.

1.3 Characteristics

General Features

- Powerful 32-bit microprocessor system.
- Complete digital measured value processing and control, from the sampling and digitalization of the analogue input quantities to the initiation of outputs for tripping or closing circuit breakers.
- Complete galvanic and reliable separation between the internal processing circuits of the device and the external measurement, control, and power supply circuits because of the design of the analog input transducers, binary input and output modules, and the DC/DC or AC/DC converters.
- Suitable for power transformers, generator, motors, reactors, or smaller busbar arrangements, as well as for multi-terminal lines and multi-winding transformers
- Easy device operation through an integrated operator panel or by means of a connected personal computer running DIGSI.

Transformer Differential Protection

- Current restraint tripping characteristic
- Restraint feature against high inrush currents with 2nd harmonic
- Restraint feature against transient and steady-state fault currents caused e.g. by overexcitation of transformers, using a further harmonic (3rd or 5th harmonic)
- Insensitivity to DC components and current transformer saturation
- High level of stability even with different degrees of current transformer saturation
- High-speed instantaneous trip in case of high-current transformer faults
- Adjustable to the conditioning of the starpoint(s) of the power transformer
- Increased earth-fault sensitivity during detection of the ground current of an earthed transformer winding
- Integrated matching of the transformer connection group
- Integrated matching of the transformation ratio including different rated currents of the transformer windings

Differential Protection for Generators and Motors

- Current restraint tripping characteristic.
- High sensitivity
- Short tripping time
- Insensitivity to DC components and current transformer saturation
- High level of stability even with different degrees of current transformer saturation
- Independent of the conditioning of the starpoint

Differential Protection for Mini-Busbars and Short Lines

- Tripping characteristic with current restraint
- Short tripping time
- Insensitivity to DC components and current transformer saturation
- High level of stability even with different degrees of current transformer saturation
- Monitoring of the current connections with operation currents

Busbar Protection

- 1-phase differential protection for a busbar with up to 9 or 12 feeders (depending on the version)
- Either one relay per phase or one relay connected via interposed summation current transformers
- Tripping characteristic with current restraint
- Short tripping time
- Insensitivity to DC components and current transformer saturation
- High level of stability even with different degrees of current transformer saturation
- Monitoring of the current connections with operation currents.

Earth Fault Differential Protection

- Earth fault protection for earthed transformer windings, generators, motors, shunt reactors, or starpoint formers
- Short command duration
- High sensitivity for earth faults within the protected zone
- High stability against external earth faults using the magnitude and phase relationship of through-flowing earth current.
- 2 earth-fault differential protection functions possible

High-impedance Unit Protection

- Highly sensitive fault current detection using a common (external) burden resistor
- Short tripping time
- Insensitive against DC components and current transformer saturation
- High stability with optimum matching
- Suitable for earth fault detection on earthed generators, motors, shunt reactors, and transformers, including auto-transformers, with or without earthed starpoint.
- Suitable for any voltage measurement (via the resistor current) for application of high-impedance unit protection

Tank Leakage Protection

- For transformers or reactors the tank of which is installed isolated or with high resistance
- Monitoring of the current flowing between the tank and ground
- Can be connected via a „normal“ current input of the device or the special highly sensitive current input (3 mA smallest setting).

Time Overcurrent Protection for Phase Currents and Residual Current

- Two definite time delayed overcurrent stages for each of the phase currents and the residual (threefold zero sequence) current, can be assigned to any of the sides of the protected object or to any measuring point
- Additionally, one inverse time delayed overcurrent stage for each of the phase currents and the residual current
- Selection of various inverse time characteristics of different standards is possible, alternatively a user defined characteristic can be specified
- The stages can be combined as desired, different characteristics can be selected for phase currents on the one hand and the residual current on the other
- External blocking facility for any stage (e.g. for reverse interlocking)

- Instantaneous tripping possible at any stage when closing onto a short-circuit
- Inrush restraint using the second harmonic of the measured current
- Dynamic switchover of the time overcurrent protection settings, e.g. during cold-load start-up of the power plant
- 3 time overcurrent protection functions for phase currents and residual current

Time Overcurrent Protection for Earth Current

- Two definite time delayed overcurrent stages for the earth current, e.g. current between starpoint and earth
- Additionally, one inverse time delayed overcurrent stage for the earth current
- Selection of various inverse time characteristics of different standards is possible, alternatively a user defined characteristic can be specified
- The three can be combined as desired
- External blocking facility for any desired stage (e.g. for reverse interlocking)
- Instantaneous trip when switching on a dead fault with any desired stage
- Inrush restraint function with 2nd harmonic
- Dynamic switchover of the time overcurrent parameters, e.g. during cold-loaded start-up of the power plant
- 2 time overcurrent protection functions are possible for earth current

1-phase Overcurrent Protection

- Two definite time delayed overcurrent stages which can be combined as desired
- For any 1-phase overcurrent detection
- Can be assigned to the „normal “1-phase current input or to the highly sensitive current input
- Suitable for detection of very small current (e.g. for high-impedance unit protection or tank leakage protection)
- Suitable for detection of any desired AC voltage using an external series resistor (e.g. for high-impedance unit protection)
- External blocking facility for any stage

Unbalanced Load Protection

- Evaluation of the negative sequence system of the three phase currents of any desired side of the protected object or any three-phase measuring point
- Two definite time delayed negative sequence current stages and one additional inverse time delayed negative sequence current stage
- Selection of various inverse time characteristics of different standards is possible, alternatively a user defined characteristic can be specified
- The stages can be combined as desired.
- Trip blocking on detection of broken wire
- Thermal characteristic with adjustable negative sequence factor and adjustable cooldown time.

Thermal Overload Protection

- Thermal replica of current-initiated heat losses
- True RMS current calculation
- Can be assigned to any desired side of the protective object
- Adjustable thermal warning stage
- Adjustable current warning stage
- With or without including the ambient or coolant temperature (by means of external resistance temperature detector via RTD-box)
- Alternative evaluation of the hot-spot temperature according to IEC 60354 with calculation of the reserve power and ageing rate (by means of external resistance temperature detector via RTD-box)
- 2 breaker failure protection functions possible

Overexcitation Protection (device with voltage measurement inputs)

- Processing of the voltage/frequency ration U/f, which represents the induction B of a shunt reactance (transformer, shunt reactor)
- Adjustable warning and tripping stage (with independent delay time)
- Inverse standard characteristic or user-defined trip characteristic for calculation of the thermal stress, selectable

Reverse Power Protection (Device with Voltage Measurement Inputs)

- Real power calculation from positive sequence components
- Short operating time or exact calculation of the active power via 16 cycles
- Exact real power calculation for small power factor by compensating the error angle of the measuring locations
- Insensitive to power fluctuations
- Short-time stage with external criteria, e.g. with closed emergency tripping

Forward Power Monitoring (devices with measuring voltage inputs)

- Real power calculation from positive sequence components
- Supervision of overvoltage (P>) or undervoltage (P<) of power with individually adjustable power limits
- Short operating time or exact calculation of the active power via 16 cycles
- Automatic blocking of stage P< for recognised measured voltage failure or wire break in CT secondary circuit

Undervoltage Protection (Device with Voltage Measurement Inputs)

- Two-stage three-phase undervoltage measurement
- Evaluation of positive sequence component of the connected voltages, therefore independent of asymmetries
- Automatic blocking for measuring voltage failure
- Adjustable dropout ratio

Overvoltage Protection (Device with Voltage Measurement Inputs)

- Two-stage three-phase overvoltage measurement
- Evaluation of the largest of the three phase-to-ground voltages or the largest of the three phase-to-phase voltages (largest of the three phase-to-phase voltages (can be set)
- Adjustable dropout ratio

Frequency Protection (devices with measured voltage inputs)

- Three underfrequency stages and one overfrequency stage
- Frequency measurement via the positive sequence component of the voltages
- Insensitive to harmonics and abrupt phase angle changes
- Adjustable undervoltage threshold

Circuit Breaker Failure Protection

- With monitoring of current flow through each breaker pole on any side of the protected object
- Supervision of the breaker position possible (if breaker auxiliary contacts or feedback signal available)
- Initiation by each of the internal protection functions
- Start by external trip functions possible
- Single-stage or two-stage
- Short dropout and overshoot times
- 2 breaker failure protection functions are possible

External Direct Trip

- Tripping of either circuit breaker by an external device via binary inputs
- Inclusion of external commands into the internal processing of information and trip commands
- With or without trip time delay
- 2 breaker failure protection functions possible

Processing of external information

- Inclusion of external signals (user defined information) in internal information processing
- Pre-defined transformer annunciations for Buchholz protection and oil gassing
- Transmission to output relays, LEDs, and via serial system interfaces to central control and data storage facilities

Flexible Functions

- Up to 12 individually configurable protection or monitoring functions
- Input quantities can be selected from all the connected 3-phase or 1-phase measured quantities
- Also possible from the measured or combined input quantities: symmetrical components, power components, frequency
- Standard logic with supervision of the input quantities to over/undershooting of an adjustable limit value
- Settable time and dropout delay
- External blocking via „Blocking on Measured Quantities Failure“ parameterisable
- Editable message texts
- Additional determination and output of up to 20 mean values from measured quantities or calculated values
- Additional determination and output of up to 20 mean values from measured quantities or calculated values

User-defined Logic Functions (CFC)

- Freely programmable combination of internal and external signals for the implementation of user-defined logic functions
- All usual logic functions
- Time delays and limit value inquiries

Commissioning, Operation

- Isolation of one side or measuring point for maintenance work: the isolated line or measuring point is withdrawn from the differential protection system processing, without affecting the remainder of the protection system
- Comprehensive support facilities for operation and commissioning
- Indication of all measured values, amplitudes and phase relation
- Indication of the calculated differential and restraint currents
- Integrated help tools can be visualised by means of a standard browser: Phasor diagrams of all currents of all sides and measuring locations of the protected object are displayed as a graph.
- Connection and direction checks as well as interface check

Monitoring Functions

- Availability of the device is greatly increased because of self-monitoring of the internal measurement circuits, power supply, hardware, and software
- Supervision of the current transformer secondary circuits of symmetry and phase sequence
- Monitoring of the voltage transformer circuits (if voltage inputs are available) for symmetry, voltage sum and phase rotation
- Supervision of the voltage transformer circuits (if voltage inputs are available) for voltage failure with fast function blocking that measure undervoltages
- Checking the consistency of protection settings regarding the protected object and possible assignment of the current inputs: Blocking of the differential protection system in case of inconsistent settings which could lead to a malfunction
- Trip circuit supervision is possible.
- Broken wire supervision for the secondary CT circuits with fast phase segregated blocking of the differential protection functions and the unbalanced load protection in order to avoid spurious tripping.

Further Functions

- Battery-buffered real-time clock, which may be synchronised via a synchronisation signal (e.g. DCF77, IRIG B via satellite receiver), binary input or system interface
- Continuous calculation and display of operational measured values on the front of the device; indication of measured quantities of all sides of the protected object
- Fault event memory (trip log) for the last 8 network faults (faults in the power system), with real-time assignment
- Fault recording memory and transmission of the data for analogue and user-defined binary signals with a maximum time range of about 5s
- Switching Statistics: Recording of the trip commands issued by the device, as well as recording of the fault current data and accumulation of the interrupted fault currents

- Communication with central control and data storage equipment possible via serial interfaces (depending on the individual ordering variant) by means of data cable, modem or optical fibres Various transmission protocols are provided for this purpose.

■

Functions 2

This chapter describes the individual functions available on the SIPROTEC 4 device 7UT613/63x. It shows the setting possibilities for each function in maximum configuration. Guidelines for establishing setting values and, where required, formulae are given.

Additionally, on the basis of the following information, it may be defined which functions are to be used.

2.1	General	33
2.2	Differential Protection	104
2.3	Restricted Earth Fault Protection	138
2.4	Time Overcurrent Protection for Phase and Residual Currents	150
2.5	Time Overcurrent Protection for Earth Current	179
2.6	Dynamic Cold Load Pickup for Time Overcurrent Protection	191
2.7	Single-Phase Time Overcurrent Protection	196
2.8	Unbalanced Load Protection	206
2.9	Thermal Overload Protection	220
2.10	RTD-Boxes for Overload Detection	232
2.11	Overexcitation Protection	239
2.12	Reverse Power Protection	245
2.13	Forward Power Supervision	250
2.14	Undervoltage Protection	255
2.15	Overvoltage Protection	259
2.16	Frequency Protection	263
2.17	Circuit Breaker Failure Protection	268
2.18	External Trip Commands	276
2.19	Monitoring Functions	279
2.20	Protection Function Control	294
2.21	Disconnection of Measuring Locations	297
2.22	Additional Functions	300

2.23	Average Values, Minimum and Maximum Values	329
2.24	Command Processing	332

2.1 General

A few seconds after the device is switched on, the default display appears on the LCD. In the 7UT613/63x the measured values are displayed.

The function parameters, i.e. settings of function options, threshold values, etc., can be entered via the front panel of the device or by means of a PC connected to the operator or service interface of the device utilising DIGSI. Password No. 5 is required to modify individual settings. Operation via DIGSI is described in the SIPROTEC system description /1/ .

In this section you make the basic decisions regarding the proper interaction between your substation, its measuring points, the analogue device connections and the various protective functions of the device. Because of the comprehensive range of features provided by the devices of the 7UT613/63x family, this section is quite extensive. The device is portrayed here as completely as possible with regard to the system to be protected together with its measuring points, i.e. the current and voltage transformers, and what effects are to be expected of the protective functions of the device.

In a first step (Section 2.1.3) you should specify what type of plant component you want to protect, since the scope of additional features offered depends on the type of the main protected object. Moreover you have to decide which protective functions you want to use, because not all of the functions integrated in the device are necessary, useful or even possible for any relevant case of application.

In the next step (section 2.1.4), you describe the topology of the protected object. i.e. the arrangement of the protected object, its sides (windings for transformers, sides for generators/motors, ends for lines, feeders for busbars), and the measuring locations which will provide the respective measured values.

After entering some General Power System Data (frequency, phase sequence), you inform the device in section 2.1.4 of the properties of the main protected object. Object properties include the ratings and (in the case of transformers) the starpoint treatment, vector group and, where applicable, the auto-transformer winding.

Subsection 2.1.4 also deals with the CT data which must be set to ensure that the currents acquired at the various measuring locations are evaluated in the device with the correct scale factor.

The above information is sufficient to describe the protected object to the device's main protection function, i.e. the differential protection. For the other protection functions, you select in section 2.1.6 the measured values which will be processed by you and in which way.

The same section 2.1.6 provides information with regard to how to set the circuit breaker data, and finding out about setting groups and how to use them. Last but not least, you can set general data which are not dependent on any protection functions.

2.1.1 Device

2.1.1.1 Setting Notes

The parameters for the tripping logic of the entire device and the circuit breaker test have already been set in section 2.1.4.

Address 201 **FltDisp.LED/LCD** also decides whether the alarms that are allocated to local LEDs and the spontaneous displays that appear on the local display after a fault should be displayed on every pickup of a protection function (***Target on PU***) or whether they should be stored only when a tripping command is given (***Target on TRIP***).

For devices with graphical display, use address 202 **Spont. FltDisp.** to specify whether or not a spontaneous annunciation will appear automatically on the display (***YES***) or not (***NO***). For devices with text display such indications will appear after a system fault by any means.

In devices with text display, the start page of the basic display can be selected under address 204 **Start image DD**.

2.1.1.2 Settings

Addr.	Parameter	Setting Options	Default Setting	Comments
201	FltDisp.LED/LCD	Target on PU Target on TRIP	Target on PU	Fault Display on LED / LCD
202	Spont. FltDisp.	NO YES	NO	Spontaneous display of flt.annunciations
204	Start image DD	image 1 image 2 image 3 image 4 image 5 image 6 image 7	image 1	Start image Default Display

2.1.1.3 Information List

No.	Information	Type of Information	Comments
-	Reset LED	IntSP	Reset LED
-	Test mode	IntSP	Test mode
-	DataStop	IntSP	Stop data transmission
-	UnlockDT	IntSP	Unlock data transmission via BI
-	>Light on	SP	>Back Light on
-	SynchClock	IntSP_Ev	Clock Synchronization
-	HWTestMod	IntSP	Hardware Test Mode
1	Not configured	SP	No Function configured
2	Non Existent	SP	Function Not Available
3	>Time Synch	SP_Ev	>Synchronize Internal Real Time Clock

No.	Information	Type of Information	Comments
5	>Reset LED	SP	>Reset LED
15	>Test mode	SP	>Test mode
16	>DataStop	SP	>Stop data transmission
51	Device OK	OUT	Device is Operational and Protecting
52	ProtActive	IntSP	At Least 1 Protection Funct. is Active
55	Reset Device	OUT	Reset Device
56	Initial Start	OUT	Initial Start of Device
67	Resume	OUT	Resume
69	DayLightSavTime	OUT	Daylight Saving Time
70	Settings Calc.	OUT	Setting calculation is running
71	Settings Check	OUT	Settings Check
72	Level-2 change	OUT	Level-2 change
73	Local change	OUT	Local setting change
109	Frequ. o.o.r.	OUT	Frequency out of range
125	Chatter ON	OUT	Chatter ON
320	Warn Mem. Data	OUT	Warn: Limit of Memory Data exceeded
321	Warn Mem. Para.	OUT	Warn: Limit of Memory Parameter exceeded
322	Warn Mem. Oper.	OUT	Warn: Limit of Memory Operation exceeded
323	Warn Mem. New	OUT	Warn: Limit of Memory New exceeded

2.1.2 EN100-Modul 1

2.1.2.1 Function Description

An **EN100-Modul 1** allows to integrate the 7UT613/63x into 100 Mbit Ethernet communication networks used by process control and automation systems and running IEC 61850 protocols. This standard provides consistent inter-relay communication without gateways or protocol converters. This allows open and interoperable use of SIPROTEC 4 devices even in heterogeneous environments. In parallel to the process control integration of the device, this interface can also be used for communication with DIGSI and for inter-relay communication via GOOSE.

2.1.2.2 Setting Notes

Interface Selection No settings are required for operation of the Ethernet system interface module (IEC 61850, **EN100-Modul 1**). If the device is equipped with such a module (see MLFB), the module is automatically configured to the interface available for it, namely ***Port B***.

2.1.2.3 Information List

No.	Information	Type of Information	Comments
009.0100	Failure Modul	IntSP	Failure EN100 Modul
009.0101	Fail Ch1	IntSP	Failure EN100 Link Channel 1 (Ch1)
009.0102	Fail Ch2	IntSP	Failure EN100 Link Channel 2 (Ch2)

2.1.3 Configuration of the Functional Scope

The devices 7UT613/63x contain a series of protective and additional functions. The scope of hardware and firmware is matched to these functions. Additionally, the control functions can be in accordance with the system requirements. In addition, individual functions may be enabled or disabled during configuration, or interaction between functions may be adjusted. Functions not to be used in the actual 7UT613/63x device can thus be masked out.

Example for the configuration of the scope of functions:

7UT613/63x devices are intended to be used for busbars and transformers. Overload protection should only be applied on transformers. If the device is used for busbars this function is set to ***Disabled***, for the transformers this function is set to ***Enabled***.

The available protection and additional functions can be configured as ***Enabled*** or ***Disabled***. For various functions, a choice may be presented between several options which are explained below. Functions configured as ***Disabled*** are not processed by the 7UT613/63x. There are no indications, and associated settings (functions, limit values) are not displayed during detailed settings.

2.1.3.1 Setting Notes

Determination of the Functional Scope

Configuration settings can be entered using a PC and the software program DIGSI and transferred via the front serial port or the rear service interface. The operation via DIGSI is explained in the SIPROTEC System Description/1/.

In order to change **configuration parameter,** entering of **password no. 7** (for parameter set) is required. Without the password, the settings may be read, but may not be modified and transmitted to the device.

Function scope and, if necessary, the available options are set in the **Function Scope** dialogue box to match plant requirements.



Note

The available functions and default settings depend on the order variant of the device.

Special characteristics are set out in detail below. The annex includes a list of the functions with the suitable protective objects.

Parameter Group Changeover Function

If the parameter group changeover function is desired, address 103 **Grp Chge OPTION** should be set to ***Enabled***. In this case, it is possible to apply up to four different groups of settings for the function parameters. During normal operation, a convenient and fast switch-over between these setting groups is possible. The setting ***Disabled*** implies that only one function parameter setting group can be applied and used.

Protected Object

The definition of the **PROT. OBJECT** (address 105) is important for the correct assignment of the setting parameters and the possible inputs and outputs and functions of the device. This object is defined as the main protected object which is intended to be protected by the differential protection. It should be mentioned here that further parts of the power plant can be protected by other part functions if not all measured current inputs of the device are necessary for the differential protection of the main protected object. The settings for the protected object and the following protection functions are irrespective of how the protection functions act on the protected object and which measuring locations (current transformers) are available.

- Normal Power transformers with separate windings are set as **PROT. OBJECT** = ***3 phase transf.*** regardless of the number of windings, vector groups and the earthing conditions of the starpoints. This is also valid if a neutral earthing reactor is situated within the protected zone. If the differential protection shall cover a generator or motor and a unit-connected power transformer (also with more than 2 windings), the protected object is also declared as transformer protection.
- For **PROT. OBJECT** = ***1 phase transf.*** phase input L2 is not connected. This option is suited especially to single-phase power transformers with 16.7 Hz (traction transformers). Single-phase transformers are generally treated as three-phase protected objects.
- g60For auto-transformers select **PROT. OBJECT** = ***Autotransf.***, regardless whether the auto-transformer has one or more further separate windings. This option is also applicable for shunt reactors if current transformers are installed at both sides of the connection points.
- If three single-phase auto-transformers are arranged as a power transformer bank (see figure 2-1), the connections of the starpoint leads of the windings are accessible and often provided with current transformers. Here, it is possible, instead of a normal transformer differential protection via an entire power transformer bank, to realise three single-phase current comparison circuits via each auto transformer winding. In figure 2-1 the protected zone of each phase is shaded.

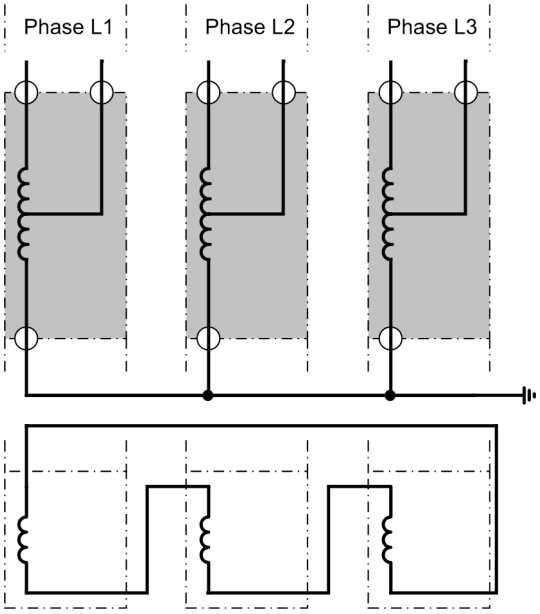

Figure 2-1 Transformer bank, consisting of 3 single-phase auto-transformers with current comparison via each single phase

- Such current comparison is more sensitive to 1-phase earth faults in one of the transformers than the normal differential protection. This has a certain importance considering that 1-phase earth faults are the most probable faults in such banks.
- On the other hand, the compensation winding cannot and must not be included into this protection even if it is accessible and equipped with current transformers. This application variant is based on the current law in that all currents flowing into a winding must total to zero.
- If this protection variant is desired, set address 105 to **PROT. OBJECT** = ***Autotr. node***.
- Equal setting is valid for generators and motors. The setting **PROT. OBJECT** = ***Generator***/***Motor*** also applies to series reactors and shunt reactors, if a complete 3-phase set of current transformers is connected to both sides.
- For the operation of mini-busbars set **PROT. OBJECT** = ***3ph Busbar***. The maximum number of feeders is determined by the number of three-phase measurement inputs of the device. 7UT613 and 7UT633 allow a maximum number of 3, 7UT635 a maximum of 5 measuring locations. This setting applies also to short lines which are terminated by two sets of current transformers. „Short “ means that the current transformer connections from the CTs to the device cause no impermissible burden for the current transformers.
- If the device is used as busbar as 1-phase device or via summation transformer as 3-phase device, the setting **PROT. OBJECT** = ***1ph Busbar*** applies. The maximum number of feeders is determined by the number of single-phase measurement inputs of the device (7UT613 and 7UT633 provide up to 9, 7UT635 up to 12 measurement inputs).

Differential Protection

The differential protection is the main protective function of the device. Address 112 **DIFF. PROT.** is thus set to ***Enabled***.

Restricted Earth Fault Protection

The **Restricted earth fault protection** (address 113 **REF PROT.**) compares the sum of the phase currents flowing into the three-phase protected object together with the current flowing into the earthed starpoint. Further information is given in section 2.3.

Note that this is not applicable to the protected object busbar (address 105 **PROT. OBJECT**= ***1ph Busbar*** and address 105 **PROT. OBJECT**= ***3ph Busbar***).

Restricted Earth Fault Protection 2

Likewise, address 114 **REF PROT. 2** is valid for the second possible restricted earth fault protection

Dynamic Pickup Switching for Overcurrent Protection

The dynamic parameter switching (address 117 **COLDLOAD PICKUP**) permits temporary switching to alternative pickup values in case of overcurrent protection function for phase currents, zero sequence currents and earth currents. Further information is given in section 2.6.

Overcurrent Protection for Phase Currents

To select the characteristic group according to which the phase overcurrent time protection is to operate use address 120 **DMT/IDMT Phase**. This protection is not applicable for single-phase busbar protection (address105 **PROT. OBJECT** = ***1ph Busbar***). If it is only used as definite time overcurrent protection (O/C), set ***Definite Time***. In addition to the definite time overcurrent protection an inverse time overcurrent protection may be configured, if required. The latter operates according to an IEC-characteristic (***TOC IEC***), to an ANSI-characteristic (***TOC ANSI***) or to a user-defined characteristic. In the latter case, the trip time characteristic (***User Defined PU***) or both the trip time characteristic and the reset time characteristic (***User def. Reset***) are configured. For the characteristics please refer to Technical Data.

Overcurrent Protection for Phase Currents 2 and 3

In the case of 7UT613/63x it is possible to use two additional phase overcurrent protection functions. One overcurrent protection can thus be implemented independently on various sides of the main protection object or three-phase measuring locations. In the case of **DMT/IDMT Phase2** a selection can be made under the address 130 from the same options as for the first overcurrent protection. The same applies under address 132 for **DMT/IDMT Phase3**. The selected options can be equal to or different for all of the three overcurrent protection functions.

Overcurrent Protection for Zero Sequence Currents

The type of characteristics used for the zero sequence (residual) overcurrent time protection can be set in address 122 **DMT/IDMT 3IO**. The same options are available as for the phase overcurrent protection. However, for zero sequence current time overcurrent protection the settings may be different to the settings selected for phase time overcurrent protection. This protection function always acquires the residual current 3I0 of the supervised side. This current is calculated from the sum of the corresponding phase currents. This measuring location may be different from that of the phase overcurrent protection. Note that the zero sequence overcurrent protection is not possible on single-phase protected objects (address 105 **PROT. OBJECT** = ***1 phase transf.*** or ***1ph Busbar***).

Overcurrent Protection for Zero Sequence Currents 2 and 3

At 7UT613/63x it is possible to use two additional zero sequence overcurrent protection functions. Zero sequence current can thus be detected independently on various three-phase measuring locations. For **DMT/IDMT 3IO 2** under address 134 the same options can be selected again independently. The same applies under address 136 for **DMT/IDMT 3IO 3**. The selected options can be equal to or different from the three overcurrent protection functions.

Time Overcurrent Protection for Earth Current

There is another earth current time overcurrent protection which is independent from the before-described zero sequence time overcurrent protection. This protection, to be configured in address 124 **DMT/IDMT Earth**, acquires the current connected to a single-phase current measuring input. In most cases, it is the starpoint current of an earthed starpoint (for transformers, generators, motors or shunt reactors). For this protection you may select one of the characteristic types, the same way as for the phase time overcurrent protection, no matter which characteristic has been selected for the latter.

Overcurrent Protection for Earth Current 2 (Starpoint Current)

For earth current detection in 7UT613/63x a second earth current overcurrent protection is available with which a further single-phase overcurrent protection can be realised. If, for example, a transformer YNyn0 is earthed at both starpoints, the in-flowing earth current can be monitored in each starpoint. Naturally, both earth current overcurrent protection functions can be used completely independently at different points of your system for the detection of single-phase currents. For **DMT/IDMT Earth2** under address 138 a selection can be made from the same options independently for the other overcurrent protection functions.

Single-phase Overcurrent Protection

A single-phase definite-time overcurrent protection **DMT 1PHASE** for different user requirements is available in address 127. This protection function is very well suited e.g. for highly sensitive tank leakage protection or high-impedance unit protection. A high-sensitivity current input can be used for this purpose.

Asymmetrical Load Protection

The asymmetrical load protection monitors the asymmetrical current (negative sequence system) in three-phase protected objects. In address 140 **UNBALANCE LOAD** the trip time characteristics can be set to definite time (***Definite Time***), additionally operate according to an IEC–characteristic (***TOC IEC***) or to an ANSI–characteristic (***TOC ANSI***). It can also be supplemented by a thermal stage (***DT/thermal***). The asymmetrical load protection is normally not possible in single-phase applications (address 105 **PROT. OBJECT** = ***1 phase transf.*** or ***1ph Busbar***).

Thermal Overload Protection

In address 142 **THERM. OVERLOAD** the user can additionally choose one of the two methods of overload detection. Note that the overload protection for single-phase busbar protection (address 105 **PROT. OBJECT** = ***1ph Busbar***) is not possible. If the overload protection is not required, set to ***Disabled***. Furthermore, the following is available:

- Overload protection with a thermal replica according to IEC 60255-8,
- Overload protection with calculation of hot-spot temperature and the aging rate according to IEC 60354
- Overload protection using a thermal replica with ambient temperature influence

In the first case it can still be selected whether only the overtemperature in the thermal replica, resulting from the ohmic losses in the windings of the protected object must be detected, or whether the total temperature under consideration of the coolant or environmental temperature must be calculated.

If the coolant or environmental temperature must be taken into consideration, a RTD-box must be connected to the device (see below), via which the coolant or environmental temperature is entered into the device. In this case set address 142 **THERM. OVERLOAD** = ***th repl w. sens*** (thermal replica with temperature measurement).

If there is no possibility to measure the coolant or environmental temperature and to pass to the device, address 142 **THERM. OVERLOAD** = ***th rep w.o. sen*** (thermal replica without temperature measurement) can be set. In this case the device calcu-

lates the overtemperature in the protected object from the flowing current, with reference to the permissible temperature. This method is characterised by its easy handling and a low number of setting values.

Detailed knowledge about the protected object, the environment and cooling is required for overcurrent protection with hot-spot calculation in accordance with IEC 60354; it is advisable in case of transformers with integrated temperature detectors. For this method, set address to 142 **THERM. OVERLOAD** = ***IEC354***. For further details see section 2.9

Overload Protection 2

In case of 7UT613/63x it is possible to use an additional overload protection. In case of a transformer, for example, the overtemperature of two windings can thus be detected by means of current measurement or, apart from a transformer, the windings of a shunt reactor can be monitored. For **THERM.OVERLOAD2** under address 144 select from the same options as for the first overload protection.

RTD-boxes for Overload

If, in case of an overload with thermal replica, the coolant temperature must be taken into consideration, or if an overload protection with hot-spot calculation in accordance with IEC 60354 is used (address 142 **THERM. OVERLOAD** = ***th repl w. sens*** or ***IEC354***), at least one RTD-box 7XV5662–xAD must be connected at the service interface or an additional interface of the device, which informs the device with regard to the coolant temperature. The additional interface is set in address 190 **RTD-BOX INPUT**. The possible interfaces are dependent on the version of 7UT613/63x (cf. Ordering Information and Accessories in the Appendix). ***Port C*** (service interface) is available in all versions. Depending on the device version, ***Port D*** is also possible.

RTD-box Type

If RTD-boxes with 7UT613/63x are operated, set the number and type of transfer of measuring locations (RTD = Resistance Temperature Detector) under address 191 **RTD CONNECTION**: ***6 RTD simplex*** or ***6 RTD HDX*** (with one RTD-box) or ***12 RTD HDX*** (with two RTD-boxes). The settings have to comply with those of the RTD-box.



Note

The assignment with regard to which temperature measuring point shall be used for which overload protection will be effected later during setting of the protection functions.

Overexcitation Protection

The overexcitation protection is used to detect increased overflux or overinduction conditions in generators and transformers, especially in power station unit transformers, which cause impermissible temperature rise in the iron. Note that the overexcitation protection (address 143 **OVEREXC. PROT.**) can only be used if the device is equipped with voltage measurement inputs and voltages are connected. This protection is not applicable for single-phase busbar protection (address105 **PROT. OBJECT** = ***1ph Busbar***). For further details see section 2.11

Reverse Power Protection

The reverse power protection (address 150 **REVERSE POWER**) protects mainly a turbine-generator unit during failure of energy to the prime mover. It can be applied, for example, as disconnection criterion in the system. It can only be used in three-phase protected objects, thus not at address 105 **PROT. OBJECT** = ***1 phase transf.*** or ***1ph Busbar***. The reverse current protection requires that the device is connected to a voltage transformer set and, together with a connected current trans-

former, allows for a reasonable calculation of the active power. The definition of the reverse direction is explained in detail elsewhere.

Forward Power Monitoring

The forward power monitoring (address 151 **FORWARD POWER**) can monitor a protected object with regard to undershooting as well as exceeding of a preset active power. It can only be used in three-phase protected objects, thus not at address 105 **PROT. OBJECT** = ***1 phase transf.*** or ***1ph Busbar***. The forward power monitoring requires that the device is connected to a voltage transformer set and, together with a connected current transformer, allows for a reasonable calculation of the active power. The definition of the forward direction is explained in detail elsewhere.

Undervoltage Protection

Undervoltage protection (address 152 **UNDERVOLTAGE**) detects voltage dips in electrical machines and avoids inadmissible operating states and possible loss of stability in electrical devices. It can only be used in three-phase protected objects, thus not at address 105 **PROT. OBJECT** = ***1 phase transf.*** or ***1ph Busbar***. It is normally only possible in device variant that have a voltage measuring input.

Overvoltage Protection

The overvoltage protection (address 153 **OVERVOLTAGE**) protects the system from impermissible voltage increases, thus avoiding damage to its insulation. It can only be used in three-phase protected objects, thus not at address 105 **PROT. OBJECT** = ***1 phase transf.*** or ***1ph Busbar***. It is normally only possible in device variant that have a voltage measuring input.

Frequency Protection

The frequency protection (address 156 **FREQUENCY Prot.**) has the task to detect increased or decreased frequencies in the power station sector. It can be applied, for example, as load shedding in the system. It can only be used in three-phase protected objects, thus not at address 105 **PROT. OBJECT** = ***1 phase transf.*** or ***1ph Busbar***. As the frequency is derived from the measuring voltage, this is only possible in device versions with voltage measuring inputs.

Circuit-breaker Failure Protection

The circuit-breaker protection (address 170 **BREAKER FAILURE**) is applicable to any circuit breaker. The assignment is carried out at a later stage. Note that in a single-phase busbar protection (address 105 **PROT. OBJECT** = ***1ph Busbar***) it is not possible.

Circuit-breaker Failure Protection 2

7UT613/63x provides a second circuit-breaker failure protection (address 171 **BREAKER FAIL. 2**) for an additional circuit breaker in the system. The information applicable to the first applies here.

Measuring Location Disconnection

The disconnection of the measuring location (address 180 **DISCON.MEAS.LOC**) is a help function for commissioning and revision works in the system.

Measured Value Monitoring

The different methods of measured value monitoring (address 181 **M.V. SUPERV**) are set out in detail in section 2.19.1. Voltages can of course also be monitored if the device provides voltage inputs.

Trip Circuit Supervision

For trip circuit monitoring, under address 182 **Trip Cir. Sup.**, a selection can be made with regard to operation with two binary inputs (***2 Binary Inputs***) or only one binary input (***1 Binary Input***). The inputs must be potential-free.

External Trip Command

The possibilities of two trip commands from external sources can be configured in addresses 186 **EXT. TRIP 1** and 187 **EXT. TRIP 2**.

Flexible Functions

7UT613/63x provides flexible functions that can be used for protection, monitoring or measuring tasks. Should you wish to apply these functions, this must be determined here.

up to 20 flexible protection and monitoring functions are possible,

up to 20 average values from measured values or calculated values and

up to 20 minimum or maximum values for measured values or calculated values.

At this point, only select the respective required number. The configuration of this function, i.e. which input variables are most relevant, and the setting of function parameters is carried out at a later stage, see section 2.22.7.

2.1.3.2 Settings

Addr.	Parameter	Setting Options	Default Setting	Comments
103	Grp Chge OPTION	Disabled Enabled	Disabled	Setting Group Change Option
105	PROT. OBJECT	3 phase transf. 1 phase transf. Autotransf. Autotr. node Generator/Motor 3ph Busbar 1ph Busbar	3 phase transf.	Protection Object
112	DIFF. PROT.	Disabled Enabled	Enabled	Differential Protection
113	REF PROT.	Disabled Enabled	Disabled	Restricted earth fault protection
114	REF PROT. 2	Disabled Enabled	Disabled	Restricted earth fault protection 2
117	COLDLOAD PICKUP	Disabled Enabled	Disabled	Cold Load Pickup
120	DMT/IDMT Phase	Disabled Definite Time TOC IEC TOC ANSI User Defined PU User def. Reset	Disabled	DMT / IDMT Phase
122	DMT/IDMT 3I0	Disabled Definite Time TOC IEC TOC ANSI User Defined PU User def. Reset	Disabled	DMT / IDMT 3I0
124	DMT/IDMT Earth	Disabled Definite Time TOC IEC TOC ANSI User Defined PU User def. Reset	Disabled	DMT / IDMT Earth

Addr.	Parameter	Setting Options	Default Setting	Comments
127	DMT 1PHASE	Disabled Enabled	Disabled	DMT 1Phase
130	DMT/IDMT Phase2	Disabled Definite Time TOC IEC TOC ANSI User Defined PU User def. Reset	Disabled	DMT / IDMT Phase 2
132	DMT/IDMT Phase3	Disabled Definite Time TOC IEC TOC ANSI User Defined PU User def. Reset	Disabled	DMT / IDMT Phase 3
134	DMT/IDMT 3I0 2	Disabled Definite Time TOC IEC TOC ANSI User Defined PU User def. Reset	Disabled	DMT / IDMT 3I0 2
136	DMT/IDMT 3I0 3	Disabled Definite Time TOC IEC TOC ANSI User Defined PU User def. Reset	Disabled	DMT / IDMT 3I0 3
138	DMT/IDMT Earth2	Disabled Definite Time TOC IEC TOC ANSI User Defined PU User def. Reset	Disabled	DMT / IDMT Earth 2
140	UNBALANCE LOAD	Disabled Definite Time TOC IEC TOC ANSI DT/thermal	Disabled	Unbalance Load (Negative Sequence)
142	THERM. OVERLOAD	Disabled th rep w.o. sen th repl w. sens IEC354	Disabled	Thermal Overload Protection
143	OVEREXC. PROT.	Disabled Enabled	Disabled	Overexcitation Protection (U/f)
144	THERM.OVERLOAD2	Disabled th rep w.o. sen th repl w. sens IEC354	Disabled	Thermal Overload Protection 2
150	REVERSE POWER	Disabled Enabled	Disabled	Reverse Power Protection
151	FORWARD POWER	Disabled Enabled	Disabled	Forward Power Supervision
152	UNDERVOLTAGE	Disabled Enabled	Disabled	Undervoltage Protection
153	OVERVOLTAGE	Disabled Enabled	Disabled	Overvoltage Protection

Addr.	Parameter	Setting Options	Default Setting	Comments
156	FREQUENCY Prot.	Disabled Enabled	Disabled	Over / Underfrequency Protection
170	BREAKER FAILURE	Disabled Enabled	Disabled	Breaker Failure Protection
171	BREAKER FAIL. 2	Disabled Enabled	Disabled	Breaker Failure Protection 2
180	DISCON.MEAS.LOC	Disabled Enabled	Disabled	Disconnect measurment location
181	M.V. SUPERV	Disabled Enabled	Enabled	Measured Values Supervision
182	Trip Cir. Sup.	Disabled 2 Binary Inputs 1 Binary Input	Disabled	Trip Circuit Supervision
186	EXT. TRIP 1	Disabled Enabled	Disabled	External Trip Function 1
187	EXT. TRIP 2	Disabled Enabled	Disabled	External Trip Function 2
190	RTD-BOX INPUT	Disabled Port C Port D	Disabled	External Temperature Input
191	RTD CONNECTION	6 RTD simplex 6 RTD HDX 12 RTD HDX	6 RTD simplex	Ext. Temperature Input Connection Type

2.1.4 Power System Data 1

2.1.4.1 Topology of the Protected Object

Measured Value Inputs

The devices of the 7UT613/63x family comprise various types with different function facilities and different hardware scope which latter determines the number of available analog inputs. Dependent on the ordering type, the following analog inputs are provided:

Table 2-1 Analog measuring inputs

Type	For 3-phase protected objects[1]			For busbar 1-phase			Voltage 3-phase	Voltage 1-phase
	Current 3-phase[1]	Current (auxiliary)		Current 1-phase	Current (auxiliary)			
		1-phase	sensitive[2]		1-phase	sensitive[2]		
7UT613	3	3	1	9	3	1	1	1
7UT633	3	3	1	9	3	1	1	1
7UT635	5	1	1	—	—	—	—	—
	4	4	2	12	4	2	—	—

[1] also applicable for single-phase power transformers

[2] selectable, contained in the number of 1-phase inputs

Terminology

The large variety of connection facilities of the device requires to create an exact image of the topology of the protected object. The device must be informed in which way the measured quantities derived from the measured value inputs of the device have to be processed by the different protection functions.

The topology of the protected object comprises the totality of all information: how the protected object (or several objects) is arranged, which current transformer sets supply the currents flowing into the protected object(s), and which voltages (if available) are measured at which location of the protected object. Thus, the result of the topological consideration is a complete replica of the protected object(s) with all available measuring locations. It will be decided at a later stage which measured quantities should be used by which protection functions (section 2.1.6).

Distinction must be made between the Main Protected Object and other protected objects. The main protected object is that to which the main protection function, i.e. the differential protection, is applied. This is the power transformer, generator, motor, etc. as stated under address 105 **PROT. OBJECT**.

The main protected object has 2 or more sides. The sides of a power transformer are the winding terminals, a generator or motor is terminated by the terminal side and the starpoint side. In case of combined objects like generators and transformers in unit connection the sides are the exterior terminals. The expression „side“ is applied exclusively to the main protected object.

The currents flowing into the protected object are taken from the measuring locations. These are represented by the current transformers which limit the protected zone. They may be or may not be identical with the sides. Differences between measurement locations and sides arise, for example, if a power transformer winding (= 1 side) is fed from 2 galvanically connected lead wires via 2 sets of current transformers (measuring locations).

The measuring locations which feed a side of the main protected object are the assigned measuring locations. If the device provides more 3-phase current measuring inputs than are needed for the allocation to the sides of the main protected object, the remaining measuring points are called non-assigned measuring points. These can be used for other protection, supervision, and measuring purposes which process 3-phase currents, e.g. restricted earth fault protection, time overcurrent protection, unbalanced load protection, overload protection, or simply for display of measured values. The non-assigned measuring points thus detect currents of a further protected object.

Depending on the device version, one to four single-phase auxiliary current inputs for auxiliary transformers. These can be used for processing of 1-phase currents, e.g. the earth current between a winding starpoint and earth, or the leakage current between a transformer tank and earth. They can also be assigned to the main protected object or can be non-assigned. If they are assigned to a side of the main protected object, they can be processed by the differential protection (example: inclusion of the starpoint current in the differential current). The currents of the non-assigned auxiliary inputs can be processed by other protection functions (example: detection of a tank leakage current by the single-phase overcurrent protection, or they can also be combined with other non-assigned 3-phase measuring points (example: restricted earth fault protection on a protected object other than the main protected object).

Figure 2-2 illustrates the terminology by an example. Note that the example is not practicable in this arrangement as it contains more connections than possible; it serves only for clarification of the terminology.

The main protected object is a two-winding transformer YNd with an earthed starpoint at the Y-side. Side **S1** is the upper voltage side (Y), side **S2** is the lower voltage side (d). This definition of the sides for the main protected object (and only for it) is the basis for the formation of the differential and restraint currents used in the differential protection.

For the side **S1** 2 measuring locations **M1** and **M2** exist. The currents that are measured there belong to the side **S1**, their sum flowing on side 1 in the protected zone of the main protected object. The position of the busbar isolator is not important here. Likewise, the polarity of the currents is not yet considered under topology aspects.

At the lower voltage side, side **S2** also has two measuring locations because of its branch point to the auxiliaries system circuit: **M3** and **M4**. The sum of these currents flows into the low voltage side (**S2**) of the main protected object.

The 4 measuring locations**M1** to **M4** are assigned to the sides of the main protected object, thus assigned measuring locations. They are the basis for the measured value processing of three-phase currents for the differential protection. Basically, the same applies to a single-phase transformer; Here, only the measured currents of the measuring locations are connected in two-phase.

Measuring location **M5** is not assigned to the main protected object, but to the cable feeder, which is not related in any way to the transformer. **M5** is thus a non-assigned measuring location. The currents of this measuring location can be used for other protection functions, e.g. for 3-phase overcurrent protection for protection of the cable feeder.

In 3-phase busbar protection there is no difference between measuring locations and sides; both correspond with the feeders of the busbar.

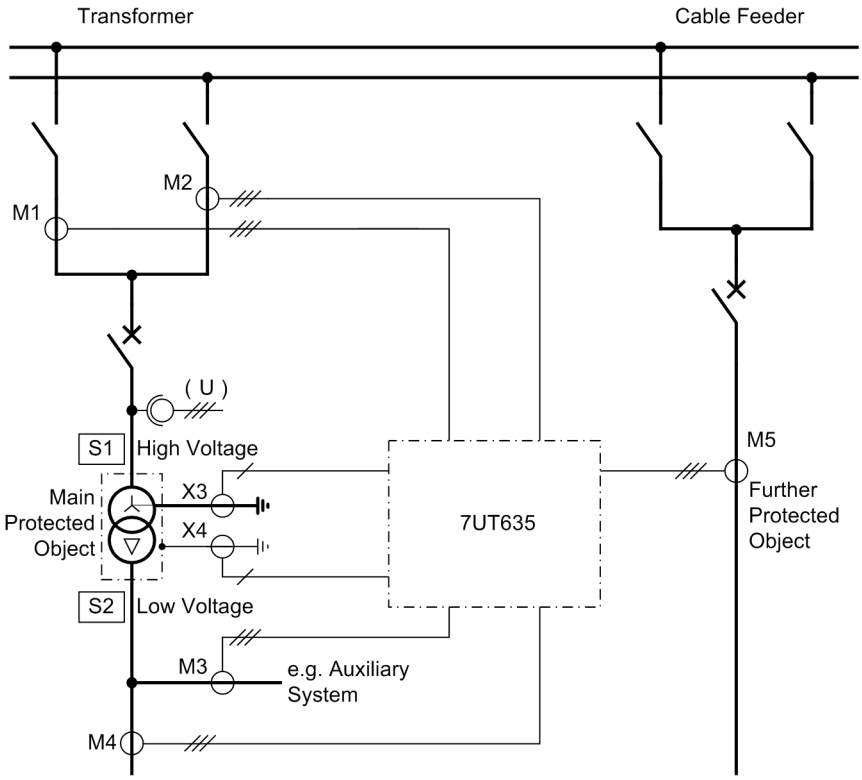

Figure 2-2 Example for the terminology of a topology

Sides:

S1 High voltage side of the main protected object (power transformer)

S2 Low voltage side of the main protected object (power transformer)

Measuring locations 3-phase, assigned:

M1 Measuring location, assigned to the main protected object, side 1

M2 Measuring location, assigned to the main protected object, side 1

M3 Measuring location, assigned to the main protected object, side 2

M4 Measuring location, assigned to the main protected object, side 2

Measuring locations 3-phase, non-assigned:

M5 Measuring location, not assigned to the main protected object

Auxiliary measuring locations, 1-phase:

X3 Measuring location, assigned to the main protected object, side 1

X4 Measuring location, not assigned to the main protected object

The auxiliary measuring location **X3** provides the starpoint current of the transformer. It is assigned to side 1 of the main protected object as an assigned measuring location. This measuring location can be used by the differential protection function for the formation of the differential current. For the restricted earth fault protection operating at the higher voltage winding, it can supply the starpoint current of side 1.

The auxiliary measuring location **X4** is not assigned to the main protected object, because it is not required by the differential protection. It is a non-assigned measuring location which is used to detect the tank earth fault current and to feed it via the single-phase measuring input IX4 to the single-phase overcurrent protection used for tank leakage protection. Although tank leakage protection is in a broader sense part of the transformer protection, **X4** is not assigned to the main protection function because

single-phase overcurrent protection is an autonomous protection function without any relation to a specific side.

Figure 2-3 shows an example of a topology which in addition to the main protected object (the three-winding transformer) has another protected object (the neutral reactor) with a three-phase measuring location and an additional 1-phase measuring location assigned to it. While in the main protected object one side can be fed from various measuring locations (this is the case for the high-voltage side **S1** of the transformer, which is fed by **M1** and **M2**), no sides are defined for the additional protected object. Nevertheless, other protection functions (not the differential protection) can act on it, such as the overcurrent protection (3-phase on **M5**), the earth overcurrent protection (1-phase on **X4**), or the restricted earth fault protection, which compares the triple zero sequence current from **M5** with the earth fault current of **X4**.

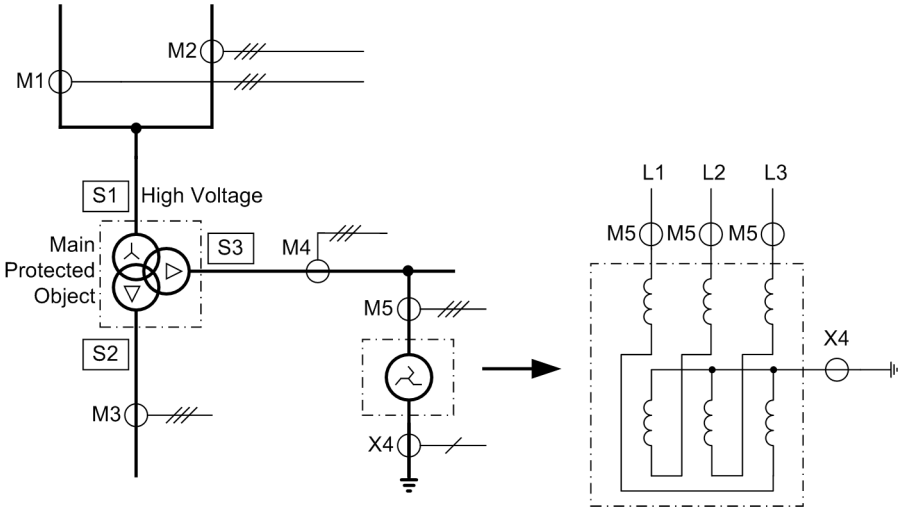

Figure 2-3 Topology of a three-winding transformer as main protected object and a neutral reactor arranged outside of the protected zone as a further protected object; right hand three-phase illustration of the neutral reactor

Sides:

S1 High voltage side of the main protected object (power transformer)

S2 Low voltage side of the main protected object (power transformer)

S3 Tertiary winding side of the main protected object (power transformer)

Measuring locations 3-phase, assigned:

M1 Measuring location, assigned to the main protected object, side 1

M2 Measuring location, assigned to the main protected object, side 1

M3 Measuring location, assigned to the main protected object, side 2

M4 Measuring location, assigned to the main protected object, side 3

Measuring locations 3-phase, non-assigned:

M5 Measuring location, not assigned to the main protected object, associated with the neutral reactor

Auxiliary measuring locations, 1-phase:

X4 Measuring location, not assigned to the main protected object, associated with the neutral reactor

Determining the Topology

You have to determine the topology of the main protected object and further objects (if applicable). The following clarifications are based on the examples given above and the terminology defined above. Further examples will be given where needed. The necessary and possible settings depend on the type of main protected object as defined during configuration of the scope of functions (section 2.1.3).

The measuring locations for a single-phase power transformer are treated like 3-phase measuring locations: From the point of view of measured value conditioning, the single-phase transformer is handled as a three-phase transformer with missing phase (L2).



Note

If you have changed the protected object, you will have to check and re-adjust all topological data.



Note

When configuring the topology proceed exactly in the order given below. Some of the following settings and setting possibilities depend on settings performed before. In DIGSI the tabs (setting sheets) under Power System Data 1 should be edited from the left tab to the right.

First of all, number the sides of the main protected object consecutively, next number the measuring locations, beginning with those for the main object, then for the remaining. In the example (Figure 2-2) there are 2 sides **S1** and **S2**, the 5 measuring locations are **M1** to **M5**.

The following sequence of sides is advised:

- For power transformers, start with the higher voltage side, as well for generator/transformer units or motor/transformer units.
- For auto-transformers, the common winding must be declared as side 1 and side 2, further taps shall follow (if applicable), then a delta winding (if applicable). Side 5 is not permitted here.
- For generators, start with the terminal side.
- For motors and shunt reactors, start with the current supply side.
- For series reactors, lines, and busbars, there is no preferred side.

Side determination plays an important role for all of the following settings.

Proceed to number the measuring locations, beginning with those which are assigned to the main protected object. Take the order of side numbering, next the non-assigned measuring locations (if used). Refer also to Figure 2-2.

Proceed numbering the auxiliary measuring locations (1-phase), again in the order: assigned locations and then further (if used).

Note

The determination of the sides and measuring locations is imperative for all further setting steps. It is also important that the currents from the measuring locations (current transformers) are connected to the associated analogue current inputs of the device: The currents of measuring location **M1** must be connected to the device at measuring locations $\mathbf{I_{L1M1}}$, $\mathbf{I_{L2M1}}$, $\mathbf{I_{L3M1}}$ (in single-phase transformers $\mathbf{I_{L2M1}}$), is omitted!

The topological data can be altered only with a PC using DIGSI.

Global Data for 3-Phase Measuring Locations

Determine the total number of 3-phase current measuring locations (= connected current transformer sets) which are connected to the device. Enter this number in address 211 **No Conn.MeasLoc** (number of connected measuring locations). 7UT613 and 7UT633 allow a maximum number of 3, 7UT635 a maximum of 5 measuring locations. The examples in Figures 2-2 and 2-3 contain 5 measuring locations each.

The number of 3-phase measuring locations assigned to the main protected object are set in address 212 **No AssigMeasLoc** (number of assigned measuring locations). Of course, this number cannot be higher than that of address 211. The difference **No Conn.MeasLoc** – **No AssigMeasLoc** is the number of non-assigned three-phase measuring locations. Both examples in the Figures 2-2 and 2-3 show five of the four assigned 3-phase measuring locations: **M1** to **M4**. **M5** is a non-assigned measuring location.

The number of sides associated with the main protected object is set in address 213 **NUMBER OF SIDES**. In the example of figure 2-2, the protected object is a power transformer with 2 windings; the number of sides is 2: S1 and S2. In the example of Figure 2-3, the main protected object is a power transformer with 3 windings; the number of sides is ***3***. In case of an auto-transformer, a maximum of 4 sides is permissible (see below).

Of course, the number of sides can be equal to the number of measuring locations (but never greater). The example in Figure 2-4 shows a three-winding power transformer with one set of current transformers at each side. In this example: **No AssigMeasLoc** = ***3*** and **NUMBER OF SIDES** = ***3***.

No distinction between sides and measuring locations is made in case of a busbar. Both correspond to the feeders. Therefore, address 213 is missing if address 105 **PROT. OBJECT** = ***3ph Busbar*** has been set.

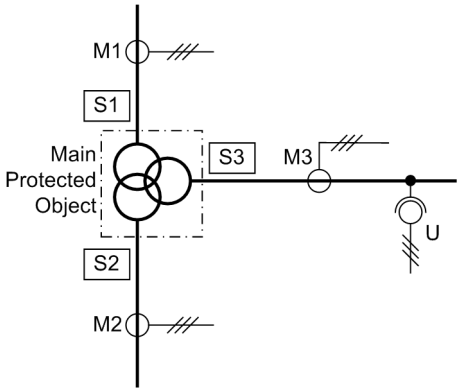

Figure 2-4 Example of a topology on a three-winding transformer

Sides:

S1 High voltage side of the main protected object (power transformer)

S2 Low voltage side of the main protected object (power transformer)

S3 Tertiary winding side of the main protected object (power transformer)

Measuring locations 3-phase, assigned:

M1 Measuring location, assigned to the main protected object, side 1

M2 Measuring location, assigned to the main protected object, side 2

M3 Measuring location, assigned to the main protected object, side 3

Special Considerations on Auto-Transformers

As mentioned above, the common windings on auto-transformers must always be defined as **S1** and **S2**. A third side may be present if the compensation winding is dimensioned as power winding (tertiary winding) and accessible (figure 2-5). In this example we have **3** sides and **4** assigned measuring locations. During parametrization of the auto-transformer, one must always start with the auto-winding.

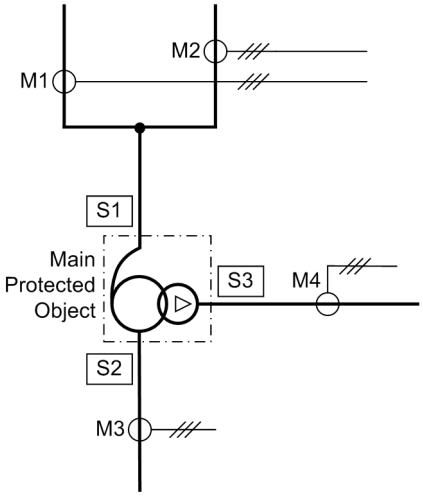

Figure 2-5 Topology of an auto-transformer with a compensation winding which is used as tertiary winding

Sides:

S1 High voltage side of the main protected object (auto-transformer)

S2 Low voltage side of the main protected object (auto-transformer)

S3 Tertiary winding side (accessible compensation winding) of the main protected object

Measuring locations 3-phase, assigned:

M1 Measuring location, assigned to the main protected object, side 1

M2 Measuring location, assigned to the main protected object, side 1

M3 Measuring location, assigned to the main protected object, side 2

M4 Measuring location, assigned to the main protected object, side 3

A further tap of the winding can also be used as the third side. Be aware that the numbering sequence always starts with the auto-connected winding: full winding, taps, and then accessible delta winding if required.

Auto-Transformer Banks

If three single-phase auto-transformers are arranged as a power transformer bank, the connections of the starpoint leads of the auto-windings are accessible and often provided with current transformers. During configuration of the functional scope in section 2.1.3 you have decided whether a differential protection must be realised via the entire transformer bank, or whether you prefer a current comparison via the winding of each phase by means of current law.

Differential protection over the entire power transformer bank:

Regarding the first case, figure 2-6 gives an example of a 3-phase presentation. In this example we have **3** sides and **3** assigned three-phase measuring locations. The auto-connected winding terminals form the sides **S1** (full winding) and **S2** (tap) with the assigned 3-phase measuring locations **M1** and **M2**. As the delta winding functions both as the tertiary winding and the compensation winding, it is the third side **S3** with measuring location **M3**.

The currents measured in the starpoint connections are not immediately required. However, you can assign it to a further three-phase measuring location. The device then calculates the current sum as earth current, if this had been set accordingly in the differential protection (see section 2.2.7).

The sum of the three currents measured in the starpoint leads can be connected to an auxiliary 1-phase current input of the device (illustrated dotted) in order to use it for restricted earth fault protection and/or time overcurrent protection. This auxiliary measuring location **X3** is then assigned to both sides **S1** and **S2**, since the current entering the protected object at **X3** must be compared with the sum of the currents at both sides. More details with regard to the assignment are discussed later.

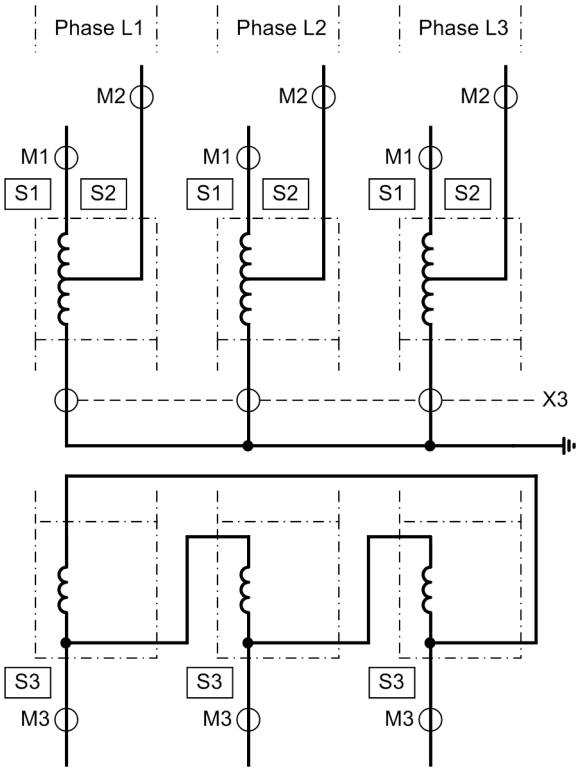

Figure 2-6 Topology of a transformer bank consisting of 3 single-phase auto-transformers with compensation winding dimensioned as accessible tertiary winding

Sides:

S1 High voltage side of the auto-connected winding of the main protected object

S2 Low voltage side (tap) of the auto-connected winding of the main protected object

S3 Tertiary winding side (accessible compensation winding) of the main protected object

Measuring locations 3-phase, assigned:

M1 Measuring location, assigned to the main protected object, side 1

M2 Measuring location, assigned to the main protected object, side 2

M3 Measuring location, assigned to the main protected object, side 3

Auxiliary measuring locations, 1-phase, assigned to the main object (current sum of the CT set):

X3 Measuring location, assigned to the main protected object, side 1 and 2

Current comparison for common winding of an auto-transformer:

If during configuration of the functional scope in section 2.1.3 a pure current comparison via each winding has been selected, then the example of figure 2-7 applies. Besides the common winding terminals of the sides **S1** (full winding) and **S2** (tap) with the assigned 3-phase measuring locations ***M1*** and ***M2***, one more side **S3** is defined at the starpoint terminals with the 3-phase measuring location ***M3***. In this way, a current comparison can be realised over each of the three transformer windings, i.e. each phase with its 3 measuring locations.

Such current comparison is more sensitive to 1-phase earth faults in one of the transformers than the normal differential protection. This has a certain importance considering that 1-phase earth faults are the most probable faults in such banks. By means of the parameter setting at address 105 **PROT. OBJECT** = ***Autotransf.Autotr. node***, the current comparison protection of the auto-transf. node is supported.

On the other hand, the compensation winding cannot and must not be included into this protection even if it is accessible and equipped with current transformers. This application variant is based on the current law in that all currents flowing in to a winding must total to zero. In auto-transformers with stabilising winding, the stabilising winding should be protected separately (e.g. with time overcurrent protection). During setting of address 105 **PROT. OBJECT** = ***Autotransf.***, a stabilising winding can be included.

The current transformer **X1** in figure 2-7 is not required. In order to realise an earth overcurrent protection or a restricted earth fault protection in this arrangement, you can feed the sum of the three currents measured at ***M3*** to an auxiliary 1-phase current input of the device. An example of a connection, where a measuring location ***M3*** serves as 3-phase measuring location for the current comparison and where simultaneously the total current $3I_0$ of the transformer set is led to a 1-phase measuring location I_{X1} of the device, is available in the annex.

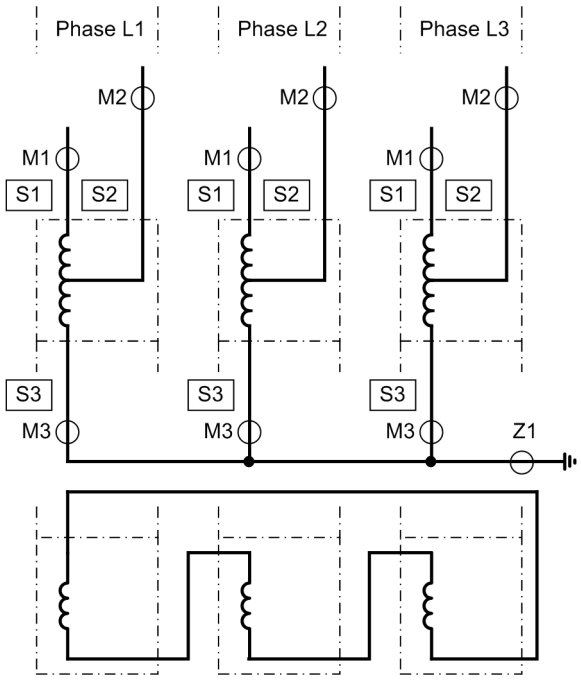

Figure 2-7 Topology of a transformer bank consisting of 3 single-phase auto-transformers, topology definitions for a current comparison protection for each phase

Sides:

S1 High voltage side of the auto-connected winding of the main protected object

S2 Low voltage side (tap) of the auto-connected winding of the main protected object

S3 Starpoint side of the auto-connected winding of the main protected object

Measuring locations 3-phase, assigned:

M1 Measuring location, assigned to the main protected object, side 1

M2 Measuring location, assigned to the main protected object, side 2

M3 Measuring location, assigned to the main protected object, side 3

Auxiliary measuring locations, 1-phase, assigned to the main object:

X1 Measuring location, assigned to the main protected object, side 1 and 2

Global Data for 1-Phase Busbar Protection

If the device is used as busbar protection, either as single-phase protection or as three-phase protection via external summation transformers, set the number of feeders of the busbar in address 216 **NUMBER OF ENDS**. The minimum number amounts to ***3*** ends (with less than that the operation of a 7UT613/63x would not make sense).

The maximum number of feeders amounts to ***9***ends in 7UT613 and 7UT633 and ***12*** in 7UT635.

Assignment of 3-phase Measuring Locations

After determination of the global data, the 3-phase measuring locations must be assigned to the sides of the main protected object. Only few meaningful combinations are possible for this assignment because of the condition that always **NUMBER OF SIDES** ≤ **No AssigMeasLoc** ≤ **No Conn.MeasLoc** and that a protected object provides at least 2 sides. In order to exclude impossible combinations at all, only those addresses of the following lists are requested which correspond to the global settings of addresses 211, 212, and 213. Furthermore, only meaningful setting options appear.

If the global data are implausible, the device does not find any meaningful combination of assignment possibilities. In this case you will find address 230 **ASSIGNM. ERROR**, which shows one of the following options:

- ***No AssigMeasLoc*** the number of assigned measuring locations is implausible;
- ***No of sides*** the number of sides is implausible.

This parameter cannot be changed. It merely informs you about the implausibility of the global settings. If it appears, you cannot make any further assignments. Recheck in this case carefully the addresses 211, 212, and 213 and correct the settings.

Only one of the variety of the following listed assignment parameter is possible. But in the actual case, only one address appears, namely the address which corresponds to the above mentioned number of sides and assigned measuring locations. The measuring location and side are separated by a comma, e.g. ***3M,2S*** means 3 assigned measuring locations at 2 sides.

Only the combinations possible for the number of measuring locations and sides appear as setting options. The measuring locations of the same side are connected by a „**+**“ sign; the side sequence by a comma. In the following, all possibilities are explained.

Address 220 **ASSIGNM. 2M,2S** appears if **2** assigned measuring locations (address 212) have been selected for **2** sides (address 213). Only one option is possible:

- ***M1,M2***, i.e. the 2 measuring locations are assigned: M1 to side S1, M2 to side S2.

Since no other possibilities exist there are no further options.

Address 221 **ASSIGNM. 3M,2S** appears if **3** assigned measuring locations (address 212) have been selected for **2** sides (address 213). The following options are possible:

- ***M1+M2,M3***, i.e. the 3 measuring locations are assigned: M1 and M2 to side S1, M3 to side S2.
- ***M1,M2+M3***, i.e. the 3 measuring locations are assigned: M1 to side S1, M2 and M3 to side S2.

Address 222 **ASSIGNM. 3M,3S** appears if **3** assigned measuring locations (address 212) have been selected for **3** sides (address 213). Only one option is possible:

- ***M1,M2,M3***, i.e. the **3** measuring locations are assigned: M1 to side S1, M2 to side S2, M3 to side S3. This corresponds to the examples in figures 2-4 and 2-6, 2-7.

The further assignment possibilities can only occur in 7UT635 since 7UT613 and 7UT633 provide a maximum of 3 three-phase current inputs (cf. table 2-1).

Address 223 **ASSIGNM. 4M,2S** appears if **4** assigned measuring locations (address 212) have been selected for **2** sides (address 213). The following options are possible:

- ***M1+M2,M3+M4***, i.e. the 4 measuring locations are assigned: M1 and M2 to side S1, M3 and M4 to side S2. This corresponds to the example in Figure 2-2 (M5 is not assigned there).
- ***M1+M2+M3,M4***, i.e. the 4 measuring locations are assigned: M1 and M2 and M3 to side S1, M4 to side S2.
- ***M1,M2+M3+M4***, i.e. the 4 measuring locations are assigned: M1 to side S1, M2 and M3 and M4 to side S2.

Address 224 **ASSIGNM. 4M,3S** appears if **4** assigned measuring locations (address 212) have been selected for **3** sides (address 213). The following options are possible:

- ***M1+M2,M3,M4***, i.e. the 4 measuring locations are assigned: M1 and M2 to side S1, M3 to side S2, M4 to side S3. This corresponds to the examples in Figures 2-3 and 2-5.
- ***M1,M2+M3,M4***, i.e. the 4 measuring locations are assigned: M1 to side S1, M2 and M3 to side S2, M4 to side S3.
- ***M1,M2,M3+M4***, i.e. the 4 measuring locations are assigned: M1 to side S1, M2 to side S2, M3 and M4 to side S3.

Address 225 **ASSIGNM. 4M,4S** appears if **4** assigned measuring locations (address 212) have been selected for **4** sides (address 213). Only one option is possible:

- ***M1,M2,M3,M4***, i.e. the 4 measuring locations are assigned: M1 to side S1, M2 to side S2, M3 to side S3, M4 to side S4.

Address 226 **ASSIGNM. 5M,2S** appears if **5** assigned measuring locations (address 212) have been selected for **2** sides (address 213). The following options are possible:

- ***M1+M2+M3,M4+M5***, i.e. the 5 measuring locations are assigned: M1 and M2 and M3 to side S1, M4 and M5 to side S2.
- ***M1+M2,M3+M4+M5***, i.e. the 5 measuring locations are assigned: M1 and M2 to side S1, M3 and M4 and M5 to side S2.
- ***M1+M2+M3+M4,M5***, i.e. the 5 measuring locations are assigned: M1 and M2 and M3 and M4 to side S1, M5 to side S2.
- ***M1,M2+M3+M4+M5***, i.e. the 5 measuring locations are assigned: M1 to side S1, M2 and M3 and M4 and M5 to side S2.

Address 227 **ASSIGNM. 5M,3S** appears if **5** assigned measuring locations (address 212) have been selected for **3** sides (address 213). The following options are possible:

- ***M1+M2,M3+M4,M5***, i.e. the 5 measuring locations are assigned: M1 and M2 to side S1, M3 and M4 to side S2, M5 to side S3.
- ***M1+M2,M3,M4+M5***, i.e. the 5 measuring locations are assigned: M1 and M2 to side S1, M3 to side S2, M4 and M5 to side S3.
- ***M1,M2+M3,M4+M5***, i.e. the 5 measuring locations are assigned: M1 to side S1, M2 and M3 to side S2, M4 and M5 to side S3.
- ***M1+M2+M3,M4,M5***, i.e. the 5 measuring locations are assigned: M1 and M2 and M3 to side S1, M4 to side S2, M5 to side S3.
- ***M1,M2+M3+M4,M5***, i.e. the 5 measuring locations are assigned: M1 to side S1, M2 and M3 and M4 to side S2, M5 to side S3.
- ***M1,M2,M3+M4+M5***, i.e. the 5 measuring locations are assigned: M1 to side S1, M2 to side S2, M3 and M4 and M5 to side S3.

Address 228 **ASSIGNM. 5M,4S** appears if **5** assigned measuring locations (address 212) have been selected for **4** sides (address 213). The following options are possible:

- ***M1+M2,M3,M4,M5***, i.e. the 5 measuring locations are assigned: M1 and M2 to side S1, M3 to side S2, M4 to side S3, M5 to side S4.
- ***M1,M2+M3,M4,M5***, i.e. the 5 measuring locations are assigned: M1 to side S1, M2 and M3 to side S2, M4 to side S3, M5 to side S4.

- ***M1,M2,M3+M4,M5***, i.e. the 5 measuring locations are assigned: M1 to side S1, M2 to side S2, M3 and M4 to side S3, M5 to side S4.
- ***M1,M2,M3,M4+M5***, i.e. the 5 measuring locations are assigned: M1 to side S1, M2 to side S2, M3 to side S3, M4 and M5 to side S4.

Address 229 **ASSIGNM. 5M,5S** appears if **5** assigned measuring locations (address 212) have been selected for **5** sides (address 213). Only one option is possible:

- ***M1,M2,M3,M4,M5***, i.e. the 5 measuring locations are assigned: M1 to side S1, M2 to side S2, M3 to side S3, M4 to side S4, M5 to side S5.

Assignment of Sides in Auto-Transformers

If auto-transformers are protected the additional question arises how the sides of the protected object are to be handled by the main protection function, the differential protection. As mentioned above, various possibilities exist how the sides are defined. Further information is necessary in order to achieve an exact replica of the auto-transformer. Therefore, the following addresses only apply to auto-transformers (address 105 **PROT. OBJECT** = ***Autotransf.*** or ***Autotr. node***).

Both of the following tables show which version of configuration is supported for ***Autotransf.*** and for a ***Autotr. node*** and which principle of the transformer is applied. The earth winding is included as a side due to the parameterisation.

Table 2-2 Configuration Versions in an auto transformer

Number of sides	Configuration types of the side			
	SIDE 1	SIDE 2	SIDE 3	SIDE 4
2	auto-connected	auto-connected	—	—
3	auto-connected	auto-connected	auto-connected	—
3	auto-connected	auto-connected	compensation.	—
3	auto-connected	auto-connected	earth.electrode	—
4	auto-connected	auto-connected	auto-connected	auto-connected
4	auto-connected	auto-connected	auto-connected	compensation.
4	auto-connected	auto-connected	auto-connected	earth.electrode
4	auto-connected	auto-connected	compensation.	auto-connected
4	auto-connected	auto-connected	compensation.	compensation.
4	auto-connected	auto-connected	compensation.	earth.electrode

Table 2-3 Configuration Versions in an auto transformer node

Number of sides	Configuration types of the side			
	SIDE 1	SIDE 2	SIDE 3	SIDE 4
3	auto-connected	auto-connected	earth.electrode	—
4	auto-connected	auto-connected	auto-connected	earth.electrode

address 241 **SIDE 1** of the auto-transformer must be assigned to a ***auto-connected*** (primary winding, as recommended above). This is imperative and, therefore, cannot be changed.

Address 242 **SIDE 2** of the auto-transformer must also be assigned to an ***auto-connected*** (secondary tap as recommended above). This is imperative and, therefore, cannot be changed.

For the sides 3 and 4, alternatives exist. If the auto-transformer provides another tap, the side thereof is declared as ***auto-connected***.

In the example in figure 2-6 is for a **PROT. OBJECT** = ***Autotransf.*** the side S3 the tertiary winding, thus the accessible and load capable compensation winding. In this example the setting would be:

Address 243 **SIDE 3** = ***compensation***.

This option is only possible for **PROT. OBJECT** = ***Autotransf.***.

In the examples of figure 2-7 for **PROT. OBJECT** = ***Autotr. node*** side 3 is facing the earthing electrode of the transformer. Here:

Address 243 **SIDE 3** = ***earth.electrode***.

This option is only possible if **PROT. OBJECT** = ***Autotransf.*** or if **PROT. OBJECT** = ***Autotr. node***, if no further side has been assigned.

The same applied to address 244 **SIDE 4** = ***earth.electrode***

In summary we can say: the sides S1 and S2 are imperatively assigned to the connections of the auto-connected winding. For **SIDE 3** and **SIDE 4** you have to select the option corresponding to the topology: ***auto-connected*** (for another tap of the auto-connected winding), ***compensation*** (for an accessible and load-capable compensation winding) or ***earth.electrode*** (for the earthed side of the auto-connected windings).

Assignment of Auxiliary 1-phase Measuring Locations

Each of the auxiliary (1-phase) current inputs must now be assigned in the addresses 251 to 254. The number of auxiliary inputs depends on the device type (cf. Table 2-1). In 7UT635 all inputs IX1 to IX3 are only available as additional 1-phase measuring inputs if they are not needed for a fifth 3-phase measuring location, i.e. if only four 3-phase measuring locations are needed.

The auxiliary inputs can be assigned to a side or a measuring location, or they can remain non-assigned. If you have assigned exactly one measuring location to a side, this side is equivalent to the measuring location.

Single-phase auxiliary measured currents are used in the following cases:

1. In differential protection, to include the starpoint current of an earthed transformer winding (either directly or via a neutral earthing reactor in the protected zone);
2. In restricted earth fault protection, to compare the starpoint current of an earthed winding (transformer, generator, motor, shunt reactor, neutral earthing reactor) with the zero sequence current from the phase currents;
3. In earth fault overcurrent protection, to detect the earth fault current of an earthed winding or neutral earthing reactor;
4. In single-phase overcurrent protection, to detect any 1-phase current ;
5. For operational limit monitoring tasks and/or display of measured values.

- 1st case: It is essential to assign the 1-phase input to that side of the main protected object whose incoming phase currents are to be compared with the earth fault current. Make sure that you assign the 1-phase input to the correct side. In case of transformers, this can only be a side with an earthed starpoint (directly or via a neutral earthing transformer in the protected zone).

  In the example shown in Figure 2-2, the auxiliary measuring location **X3** must be assigned to side **S1**. Once the device has been "informed" of this assignment, the current measured at current input IX3 will be reliably interpreted as the current flowing to the starpoint of the high-voltage winding (side 1).

  in the example shown in Figure 2-6 the additional measuring location **X3** must be assigned to the common winding. This winding, however, has 2 sides with 2 three-phase measuring locations. **X3** is assigned to side **S1**. Since the device has been informed in address 105 **PROT. OBJECT** = ***Autotransf.*** that the protected object is an auto-transformer, and via the assignment of sides 1 and 2 that these belong to the common winding, it is obvious that X3 belongs to the common winding, and that it is therefore assigned to sides**S1 and S2**. The result is the same if X3 is assigned to side S2. For the auto-transformer, it is therefore irrelevant which voltage side of the common winding (start of winding or any tap) the starpoint current is assigned to.
- 2nd case: For this case, the same considerations apply as for the 1st case. In the case of generators, motors or shunt reactors, select the terminal side. You can also use in the 2nd case a measuring location that is not assigned to the main protected object. In the example shown in Figure 2-3, you can use the restricted earth fault protection for the neutral reactor: The auxiliary measuring location X4 is in this case assigned to the measuring location M5. This informs the device that the measured values of the non-assigned measuring location M5 (3-phase) must be compared with the measured value of the additional measuring location X4 (1-phase).

  in the example shown in Figure 2-6 the additional measuring location **X3** must be assigned to the common winding. This winding, however, has 2 sides with 2 three-phase measuring locations. **X3** is assigned to side **S1**. Since the device has been informed in address 105 **PROT. OBJECT** = ***Autotransf.*** that the protected object is an auto-transformer, and via the assignment of sides 1 and 2 that these belong to the common winding, it is obvious that X3 belongs to the common winding, and that it is therefore assigned to sides**S1 and S2**. The result is the same if X3 is assigned to side S2. For the auto-transformer, it is therefore irrelevant which voltage side of the common winding (start of winding or any tap) the starpoint current is assigned to.
- 3rd case: Here again, the auxiliary measuring location must be assigned to that side whose earth fault current is to be processed. You can also use a measuring location that is not assigned to the main protected object. Please note that this auxiliary G96

  measuring location will provide not only the measured value for the earth fault overcurrent protection but also circuit breaker information (current flow and manual-close detection) from the corresponding 3-phase measuring location.

  One can also proceed as described in cases 4 and 5, if the current used by the earth fault overcurrent protection cannot be assigned to a specific side or 3-phase measuring location.

- 4th and 5th case: In these cases you set the parameter for the assignment of the auxiliary measuring location to ***conn*** / ***not assig.*** (connected but not assigned). The auxiliary measuring location is then assigned to neither a specific side of the main protected object nor to any other 3-phase measuring location. These protection and measuring functions do not need any information on their assignment to a 3-phase measuring location because they only process 1-phase currents.
- General advice: If you want to use a 1-phase auxiliary measuring location both for a function as per the 3rd to 5th case and for the 1st or 2nd case, you must of course assign it as described in the 1st and 2nd case.

If the device is equipped with a 1-phase measuring input but you do not need it, leave the setting ***Not connected*** unchanged (not connected).

Of the addresses described in the following paragraphs, only those available in your device will be displayed. Please keep in mind

- that in 7UT613 and 7UT633 only the auxiliary inputs IX1 to IX3 are available, and that they can be assigned to not more than 3 sides or 3-phase measuring locations;
- that in 7UT635 the auxiliary inputs IX1 to IX3 cannot be assigned to the measuring location M5, since in this device either M5 or IX1 to IX3 are available.

Addresses 251 **AUX. CT IX1**, 252 **AUX. CT IX2**, 253 **AUX. CT IX3** and 254 **AUX. CT IX4** determine to which side of the main protected object or to which 3-phase measuring location the single-phase measuring input IX1, IX2, IX3 or IX4 is assigned. Set the side or measuring location, or no assignment at all, as described above.

High-Sensitivity Additional 1-phase Measuring Locations

Depending on the version, the devices of the 7UT613/63x family are equipped with 1 or 2 auxiliary high-sensitivity measuring inputs which can detect currents as low as 3mA present at the input. These inputs can be used for single-phase overcurrent protection.

The single-phase independent overcurrent protection is suited e.g. for high-sensitivity tank leakage protection or for a high-impedance differential protection (cf. section 2.7), if a high-sensitivity measuring input is used.

If you want to use such a high-sensitivity current measuring input, you can specify this to the device at the addresses 255 and 256.

In 7UT613 and 7UT633, input IX3 can be used as a high-sensitivity input. Set address 255 **AUX CT IX3 TYPE** to ***sensitiv input*** if IX3 is used as a high-sensitivity input; otherwise leave the setting ***1A*** / ***5A input*** unchanged.

In 7UT635 the input IX3 can be used as a high-sensitivity input provided that it is not used for a fifth 3-phase measuring location, i.e. that only four 3-phase measuring locations are needed. In this case, set address 255 **AUX CT IX3 TYPE** = ***sensitiv input***, if IX3 is used as a high-sensitivity input.

The input IX4 is always available as a single-phase input in 7UT635 and can be set at address 256 **AUX CT IX4 TYPE** as ***sensitiv input*** or ***1A*** / ***5A input***.

Assignment of the Voltage-measuring Inputs

The 7UT613 and 7UT633 (not the 7UT635) can be provided with voltage measuring inputs. The 3-phase set of voltage inputs and the fourth voltage input can each be assigned to one side or one measuring location or to the busbar voltage (for busbar protection).

Measured voltages can be used in 7UT613/63x for the overexcitation protection, the undervoltage protection, the overvoltage protection, the reverse power protection, the

forward power monitoring, the frequency protection, or for measuring tasks like the display of voltages or the calculation and output of power and energy metering.

Figure 2-8 shows the various possible voltage assignments (which, of course do not occur all at the same time in practice). Address 261 must be set to **VT SET**.

- For voltage measurement at **Ua** the voltages are measured on ***Side 1*** of the main protected object.
- For voltage measurement at **Ub**, the voltages at the ***Measuring loc.2*** are measured that are assigned to side 1 of the main protected object.
- For voltage measurement at **Uc** the voltages are measured at the ***Busbar*** (only possible in busbar protection).
- For voltage measurement at **Ud**, voltages at the ***Measuring loc.3*** are measured that are not assigned to the main protected object.
- For voltage measurement at **Ue** the voltages are measured on ***Side 2*** of the main protected object.

As these examples show, you can select sides, busbars, assigned or non-assigned measuring locations. In 1-phase busbar protection, voltages can only be measured on the ***Busbar***.

In practice, the voltage assignment depends therefore on the voltages which the device is expected to receive and process. Of course, voltage transformers must be installed at the appropriate locations and connected to the device.

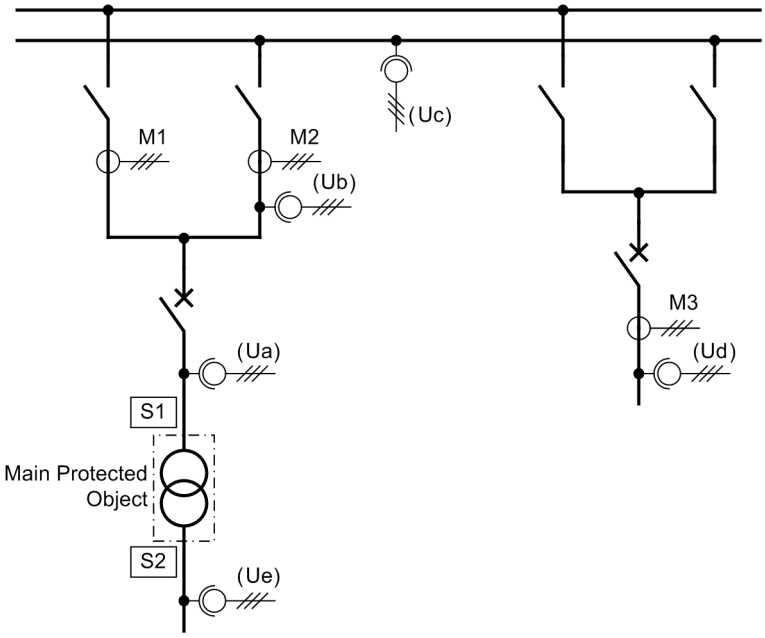

Figure 2-8 Examples of measured voltage assignment

Voltage assignment:

Ua Voltage is measured at side S1 of the main protected object (power transformer)

Ub Voltage is measured at the measuring location M2, assigned to side 1 of the main protected object

Uc Voltage is measured at a busbar

Ud Voltage is measured at the non-assigned measuring location M3

Ue Voltage is measured at side S2 of the main protected object (power transformer)

If the voltage transformers represented as **Ua** do not exist in your system, you can, for instance, use the voltages at ***Measuring loc.2*** (represented as **Ub**), as they are electrically identical (assuming that the circuit breaker is closed). The device then assigns the voltage automatically to side 1 and calculates the power of the side from this voltage and the current of side S1, which is the sum of the currents from the measuring locations M1 and M2.

If no voltages are connected, set ***Not connected***.

If the overflux protection function is used, you must choose (and connect) a voltage that is suitable for overflux protection. For transformers it must be a non-regulated side, since a proportional relationship between the quotient U/f and the iron core induction B is found only there. If, for example in figure 2-8 the winding at side 1 has a voltage controller, ***Side 2*** must be selected.

For the power protection functions it is important that the voltages are measured at such locations where the currents are flowing from which the power will be calculated. If, for example, the power is relevant that is flowing from the high-voltage side (side S1) into the transformer, as shown in figure 2-8, the assignment is set at address 261 **VT SET** = ***Side 1***. At the measuring locations **M1** and **M2** the flowing currents are multiplied by the voltage at **Ua**, in order to obtain the power.

In case of reverse power protection for a generator, the currents are usually measured in the starpoint leads and the voltages at the terminal side (figure 2-9). It is also advisable here to not to assign the voltage to measuring location **M2** or to side **S2**, but to measuring location **M1** or to side **S1**. For the power calculation the voltages at **U** with currents at **M1** are taken into consideration. It is thus ensured that the active power supply of the generator from the network is evaluated as reverse power.

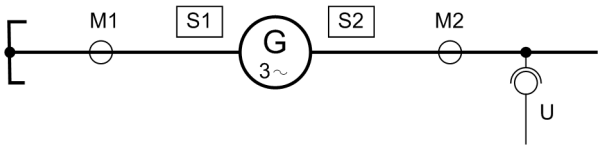

Figure 2-9 Power measurement at generator

If you have the choice to assign a side or a measuring location to the main protected object as shown in figure 2-9 (**S1** is identical to **M1**), such assignment of the side is preferable, because the power can be set later directly in the (mostly known) reference values. As the nominal data of the main protected object are known to the device, no conversion of reference values to secondary values will be required.

The under- and overvoltage protection and the frequency protection also use the voltages connected to the device. Select the side or measuring location here, which is electrically connected to the voltage transformer set.

Should the voltages not be required for the protection functions, select the voltages that must be indicated or transferred as operational measured values during operation, or on the basis of which you wish to calculate the power.

For the 1-phase voltage measurement input U4, likewise a side or measuring location can be selected at address 262 **VT U4** - irrespective of the assignment of the 3-phase voltage inputs. This measuring input is frequently used for the displacement voltage, measured at the e-n windings of the voltage transformer set, but you can also use it for detection of any other measured voltage. In this case set **VT U4** = ***conn*** / ***not assig.*** (connected, but not assigned). If no voltage is needed at the 1-phase voltage input, set ***Not connected*** (not connected).

As different connections are possible, you must now specify in the device how the connected 1-phase voltage should be interpreted. This is done at address 263 **VT U4 TYPE**. Set ***Udelta transf.*** if the voltage assigned acc. to address 262 is a displacement voltage. It can also be any phase-to-earth voltage (e.g. ***UL1E transform.***), or a phase-to-phase voltage (e.g. ***UL12 transform.***). If U4 is connected to a voltage which is assigned to no side or measuring location, set ***Ux transformer***.

2.1.4.2 General Power System Data (Power System Data 1)

General

The device requires some plant and power system data in order to be able to adapt its functions accordingly, dependent on the actual application. The data required include for instance rated data of the substation and the measuring transformers, polarity and connection of the measured quantities, if necessary features of the circuit breakers, and others. There are also certain parameters common to all functions, i.e. not associated with a specific protection, control or monitoring function. These data can only be changed from a PC running DIGSI and are discussed in this section.

Rated Frequency

The rated frequency of the power system is set under address 270 **Rated Frequency**. The available rated frequencies are ***50 Hz***, ***60 Hz*** and ***16,7 Hz***.

Phase Sequence

Under address 271 **PHASE SEQ.** the presetting for clockwise rotation ***L1 L2 L3*** can be changed if a power plant has an anticlockwise rotation ***L1 L3 L2***. The phase sequence has no influence on the vector group conversion of the differential protection as long as the identical phase rotation is present on all sides of the protected object. This setting is irrelevant for single-phase application and is not accessible.

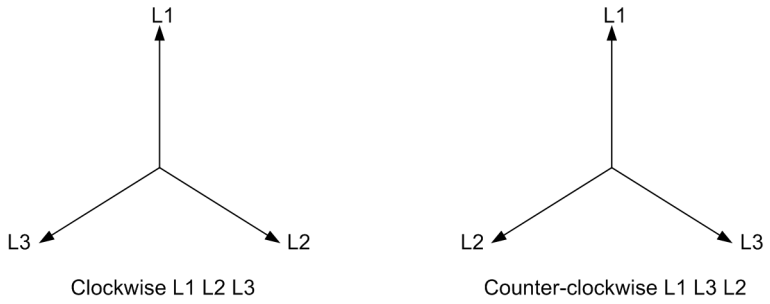

Figure 2-10 Phase rotation

Temperature Unit

The temperature of the hot-spot temperature calculation can be displayed in ***Celsius*** or ***Fahrenheit***. This applies in particular for the output of the hot-spot temperature if you are using the overload protection with hot-spot calculation. Set the desired temperature unit in address 276 **TEMP. UNIT**. Changing temperature units does not mean that setting values which are linked to these temperature units will automatically be converted. They have to be re-entered into their corresponding valid addresses.

Object Data with Transformers

Transformer data are required if the device is used for differential protection for transformers, i.e. if the following was set with the configuration of the protection functions (functional scope) under address 105 **PROT. OBJECT** = ***3 phase transf.*** or ***1 phase transf.*** or ***Autotr. node***. In cases other than that, these settings are not available.

Please observe the definition of the sides which you have performed during setting of the topology of the main protected object (cf. Determining the Topology). Generally, side 1 is the reference winding having a current phase angle of 0° and no vector group indicator. Usually this is the higher voltage winding of the transformer.

The object data contain information about each of the sides of the protected object as defined in the topology statements. No data of the sides which are not assigned are requested here. They will be entered at a later date (margin heading „Object Data for Further Protected Objects“).

For side 1 the device needs the following information:

- The primary rated voltage U_N in kV (phase-to-phase) under address 311 **UN-PRI SIDE 1**.
- The primary rated apparent power under address 312 **SN SIDE 1**. Note that the power ratings of the windings of power transformers with more than 2 windings may differ. Here, the rating of the winding assigned to side 1 is decisive. The power must always be entered as a primary value, even if the device is generally configured in secondary values. The device calculates the rated current of the protected winding from this power.
- The starpoint condition under address 313 **STARPNT SIDE 1**: ***Earthed*** or ***Isolated***. If the starpoint is earthed via a current-limiting circuit (e.g. low-resistive) or via a Petersen-coil (high-reactive), set ***Earthed***, too. The starpoint is also treated as ***Earthed*** if a starpoint former (neutral earthing reactor) is installed within the protected zone of the winding.
- The mode of interconnection of the transformer windings under address 314 **CONNECTION S1**. If side 1 is that of the high-voltage side of the transformer, this is normally the capital letter of the vector group according to IEC (***Y*** or ***D***). For auto-transformers and single-phase transformers, only ***Y*** is permitted.

If the transformer winding is regulated, not the actual rated voltage of the winding U_{NB} is used, but rather the voltage which corresponds to the average current of the regulated range.

$$U_N = 2 \cdot \frac{U_{max} \cdot U_{min}}{U_{max} + U_{min}} = \frac{2}{\frac{1}{U_{max}} + \frac{1}{U_{min}}}$$

with U_{max}, U_{min} at the limits of the tap changer.

Calculation example:

Transformer	YNd5
	35 MVA
	110 kV/20 kV
	Y–winding with tap changer ±20 %

This results for the regulated winding (110 kV) in:

maximum voltage	U_{max} = 132 kV
minimum voltage	U_{min} = 88 kV

Voltage setting (address 311)

$$\text{UN-PRI SIDE1} = \frac{2}{\frac{1}{U_{max}} + \frac{1}{U_{min}}} = \frac{2}{\frac{1}{132\ \text{kV}} + \frac{1}{88\ \text{kV}}} = 105.6\ \text{kV}$$

For side 2, the same considerations apply as for the side 1: The primary rated voltage **UN-PRI SIDE 2** (under address 321), the starpoint condition **STARPNT SIDE 2** (under address 323). Observe strictly the assignment of the side according to the topological definitions made before.

The primary rated apparent power under address 322 **SN SIDE 2** is that of the winding assigned to side 2. Concerning power transformers with more than two windings, the windings may have different power ratings. The power must always be entered as a primary value, even if the device is generally configured in secondary values. The device calculates the rated current of the protected winding from this power.

The mode of connection **CONNECTION S2** (address 324) and the vector group numeral **VECTOR GRP S2** (address 325) must match the transformer data of the transformer windings at side 2. The vector group numeral states the phase displacement of side 2 against the reference winding, side 1. It is defined according to IEC as the multiple of 30°. If the higher voltage side is the reference (side 1), you may take the data directly from the vector group designation. For instance, for a transformer Yd5 is **CONNECTION S2** = ***D*** and **VECTOR GRP S2** = ***5***. Every vector group from 0 to 11 can be set provided it is possible (for instance, Yy, Dd and Dz allow only even, Yd, Yz and Dy allow only odd numerals). For the auto-connected winding of auto-transformers and for single-phase transformers, only ***Y 0*** is permissible.

If a reference winding other than the higher voltage one is used, it must be noted that this changes the vector group numeral: e.g. a Yd**5** transformer is regarded from the lower voltage side as Dy**7**.

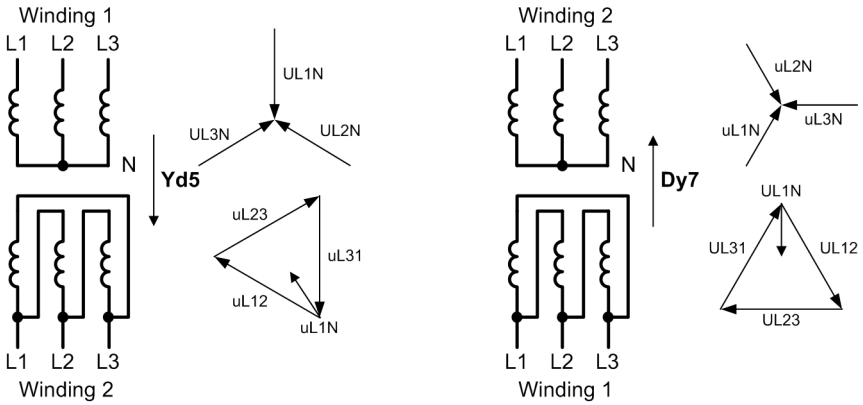

Figure 2-11 Change of the transformer vector group if the lower voltage side is the reference side — example

If the power transformer includes more than 2 windings or assigned sides, similar considerations apply for the further windings (winding 4 and 5 only with 7UT635). If you have declared the starpoint connections of an auto-transformer bank as a separate side in order to establish a current comparison protection for each of the windings (refer also to Figure 2-7 and the respective notes under „Auto-Transformer Banks“), no settings will be presented for this side as they would have no meaning for this application. If in an auto-transformer side S3 or S4 is a compensation winding, the mode of connection is always assumed to be „D“, and only odd-numbered vector groups can be selected for these sides.

For the winding assigned to side 3, the following data are relevant:

- Address 331 **UN-PRI SIDE 3** the primary rated voltage (consider regulating range),
- Address 332 **SN SIDE 3** the primary rated apparent power,
- Address 333 **STARPNT SIDE 3** the starpoint treatment,
- Address 334 **CONNECTION S3** the winding connection mode,
- Address 335 **VECTOR GRP S3** the vector group numeral.

For the winding assigned to side 4, the following data are relevant:

- Address 341 **UN-PRI SIDE 4** the primary rated voltage (consider regulating range),
- Address 342 **SN SIDE 4** the primary rated apparent power,
- Address 343 **STARPNT SIDE 4** the starpoint conditioning,
- Address 344 **CONNECTION S4** the winding connection mode,
- Address 345 **VECTOR GRP S4** the vector group numeral.

For the winding assigned to side 5, the following data are relevant:

- Address 351 **UN-PRI SIDE 5** the primary rated voltage (consider regulating range),
- Address 352 **SN SIDE 5** the primary rated apparent power,
- Address 353 **STARPNT SIDE 5** the starpoint conditioning,
- Address 354 **CONNECTION S5** the winding connection mode,
- Address 355 **VECTOR GRP S5** the vector group numeral.

The device automatically computes from these data of the protected transformer and its windings the current-matching formulae which are required to match the vector group and the different rated winding currents. The currents are converted such that the sensitivity of the protection always refers to the power rating of the transformer. In case of different rating of the windings, the rated apparent power of the most powerful winding is the rated apparent power of the transformer. In general, no circuits are required for matching of the vector group and no manual calculations for converting of rated current are normally necessary.

Object Data with Generators, Motors and Reactors

Using the 7UT613/63x for protection of generators or motors, the following must have been set when configuring the scope of functions (see section Functional Scope, address 105): **PROT. OBJECT** = ***Generator***/***Motor***. These settings also apply for series and shunt reactors if a complete set of current transformers is connected to both sides. In cases other than that, these settings are not available.

With address 361 **UN GEN**/**MOTOR** you inform the device of the primary rated voltage (phase-to-phase) of the machine to be protected.

The primary rated power set under address 362 **SN GEN**/**MOTOR** is the direct primary rated apparent power of the machine. The power must always be entered as a primary value, even if the device is generally configured in secondary values. The device calculates the rated current of the protected object and its sides from this power and the rated voltage. This is the reference for all referred values.

Object Data with Mini-Busbars, Branch-Points, Short Lines (3-phase)

These data are only required if the device is used as 3-phase differential protection for mini busbars or short lines. When configuring the scope of functions (see Scope of Functions, address 105), the following must have been set: **PROT. OBJECT** = ***3ph Busbar***. In cases other than that, these settings are not available.

The primary rated voltage (phase-to-phase) 370 **UN BUSBAR** is important for voltage-dependent protection functions (such as overexcitation protection, voltage protection, frequency protection, power protection functions). It also influences the calculation of the operational measured values.

The feeders of a busbar may be rated for different currents. For instance, an overhead line may be able to carry higher load than a cable feeder or a transformer feeder. You can define a primary rated current for each side (feeder) of the protected object; this current will be the reference for all referred values. These ratings may differ from the rated currents of the associated current transformers which latter will be entered at a later stage (current transformer data). Figure 2-12 shows the example of a busbar with 3 feeders.

Additionally, a rated current for the entire busbar as the main protected object can be determined. The currents of all measuring locations assigned to the main object are converted such that the values of the differential protection are referred to this rated current of the main protected object, here the busbar. If the current rating of the busbar is known, set this rated current in address 371 **I PRIMARY OP.**. If no rated current of the busbar is defined, you should select the highest of the rated currents of the sides (= feeders). In Figure 2-12, the rated object current (busbar current) would be 1000 A.

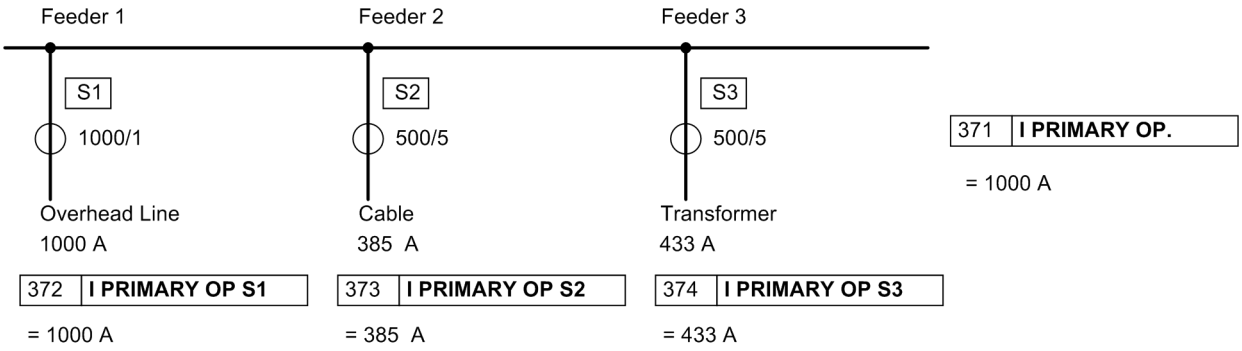

Figure 2-12 Rated current of the sides of a busbar with 3 feeders (set address 105 **PROT. OBJECT** = ***3ph Busbar***)

The object data concern only data of the protected main object as defined in the topology. No data of the sides which are not assigned are requested here. They will be entered at a later date (margin heading „Object Data for Further Protected Objects“).

Under address 372 **I PRIMARY OP S1**, set the rated primary current of the feeder 1. As mentioned above, the sides and the assigned measurement locations are identical for busbars.

The same considerations apply for the further sides:

- Address 373 **I PRIMARY OP S2** for side (feeder) 2,
- Address 374 **I PRIMARY OP S3** for side (feeder) 3,
- Address 375 **I PRIMARY OP S4** for side (feeder) 4,
- Address 376 **I PRIMARY OP S5** for side (feeder) 5.

Addresses 375 and 376, are omitted in 7UT613 and 7UT633 since these versions allow only for 3 sides.

Object Data with Busbars (1-phase Connection) with up to 6 or 9 or 12 Feeders

These busbar data are only required if the device is used for single-phase busbar differential protection. When configuring the scope of functions (see Scope of Functions, address 105), the following must have been set: **PROT. OBJECT** = ***1ph Busbar***. In cases other than that, these settings are not available. 7UT613 and 7UT633 allow up to 9, 7UT635 up to 12 feeders.

With address 370 **UN BUSBAR** you inform the device of the primary rated voltage (phase-to-phase). This setting has no effect on the protective functions but influences the displays of the operational measured values.

The feeders of a busbar may be rated for different currents. For instance, an overhead line may be able to carry higher load than a cable feeder or a transformer feeder. You can define a primary rated current for each feeder of the protected object; this current will be the reference for all referred values. These ratings may differ from the rated currents of the associated current transformers which latter will be entered at a later stage (current transformer data). Figure 2-12 shows the example of a busbar with 3 feeders.

Additionally, a rated current for the entire busbar as the main protected object can be determined. The currents of all measuring locations assigned to the main object are converted such that the values of the differential protection are referred to this rated current of the main protected object, here the busbar. If the current rating of the busbar is known, set this rated current in address 371 **I PRIMARY OP.**. If no rated current of the busbar is defined, you should select the highest of the rated currents of the sides (= feeders). In Figure 2-12, the rated object current (busbar current) would be 1000 A.

Under address 381 **I PRIMARY OP 1**, set the rated primary current of feeder 1.

The same considerations apply for the further feeders:

- Address 382 **I PRIMARY OP 2** for feeder 2,
- Address 383 **I PRIMARY OP 3** for feeder 3,
- Address 384 **I PRIMARY OP 4** for feeder 4,
- Address 385 **I PRIMARY OP 5** for feeder 5,
- Address 386 **I PRIMARY OP 6** for feeder 6,
- Address 387 **I PRIMARY OP 7** for feeder 7,
- Address 388 **I PRIMARY OP 8** for feeder 8,
- Address 389 **I PRIMARY OP 9** for feeder 9,
- Address 390 **I PRIMARY OP 10** for feeder 10,
- Address 391 **I PRIMARY OP 11** for feeder 11,
- Address 392 **I PRIMARY OP 12** for feeder 12.

In 7UT613 and 7UT633 addresses 390 to 392 are omitted, since these versions only permit 9 feeders.

If one 7UT613/63x is used per phase, set the same rated current and voltage of a feeder for all three devices. For the identification of the phases for fault annunciations and measured values each device is to be informed on the phase to which it is assigned. This is to be set in address 396 **PHASE SELECTION**.

Object Data for Further Protected Objects

The object data described in the previous paragraphs relate to the main protected object whose sides and measuring locations have been assigned according to section 2.1.4.1. If you have defined further protected objects in your topology, a number of non-assigned measuring locations will be left. The rated values of these are requested now.

The considerations concerning rated voltages and current are the same as for the main protected object. Only those of the following addresses will appear during setting

which relate to the non-assigned measuring locations, according to the set topology. Since the main protected object provides at least 2 measuring locations (differential protection would make no sense with fewer), M1 and M2 will never appear here.

Address 403 **I PRIMARY OP M3** requests the rated primary operating current at the measuring location M3 provided this is not assigned to the main protected object.

Address 404 **I PRIMARY OP M4** requests the rated primary operating current at the measuring location M4 provided this is not assigned to the main protected object.

Address 405 **I PRIMARY OP M5** requests the rated primary operating current at the measuring location M5 provided this is not assigned to the main protected object.

Addresses 404 and 405, are omitted in 7UT613 and 7UT633 since these versions allow only 3 measuring locations.

Voltage data have only a meaning in 7UT613 or 7UT633 if the device is equipped with voltage inputs. In case the 3-phase voltage inputs relate to the main protected object, the rated voltages have already been set. But, if 3-phase voltage measurement is intended at a measuring location which is not assigned to the main protected object, e.g. in address 261 **VT SET** a non-assigned ***Measuring loc.3*** is selected, then you have to enter the rated voltage of this measuring location in address 408 **UN-PRI M3**. This is a precondition for correct display and transmission of measured values (voltages, powers). Similar considerations apply to address 409 **UN-PRI U4**.

Current Transformer Data for 3-phase Measuring Locations

The rated primary operational currents for the protected object and its sides derive from the object data. The data of the current transformer sets at the sides of the protected object generally differ slightly from the object data before-described. They can also be completely different. Currents have to have a clear polarity to ensure correct function of the differential protection and restricted earth fault protection as well as for correct display of operational measured values (power etc.).

Therefore the device must be informed about the current transformer data. For 3-phase protected objects, this is done by entering rated currents and the secondary starpoint position of the current transformer sets.

In address 512 **IN-PRI CT M1** the rated primary current of the current transformer set of measuring location M1 is set, in address 513 **IN-SEC CT M1** the rated secondary current. Please make sure that the sides were defined correctly (see subsection 2.1.4.1, margin heading „Assignment of 3-phase Measuring Locations“). Please also make sure that the rated secondary transformer currents match the setting for the rated currents of these measuring inputs of the device. Otherwise the device will calculate incorrect primary data, and malfunction of the differential protection may occur.

Indication of the starpoint position of the current transformers determines the polarity of the currents. To inform the device of the starpoint position in relation to the measuring location 1, use address 511 **STRPNT->OBJ M1** (starpoint versus object: ***YES*** or ***NO***). Figure 2-13 shows some examples for this setting.

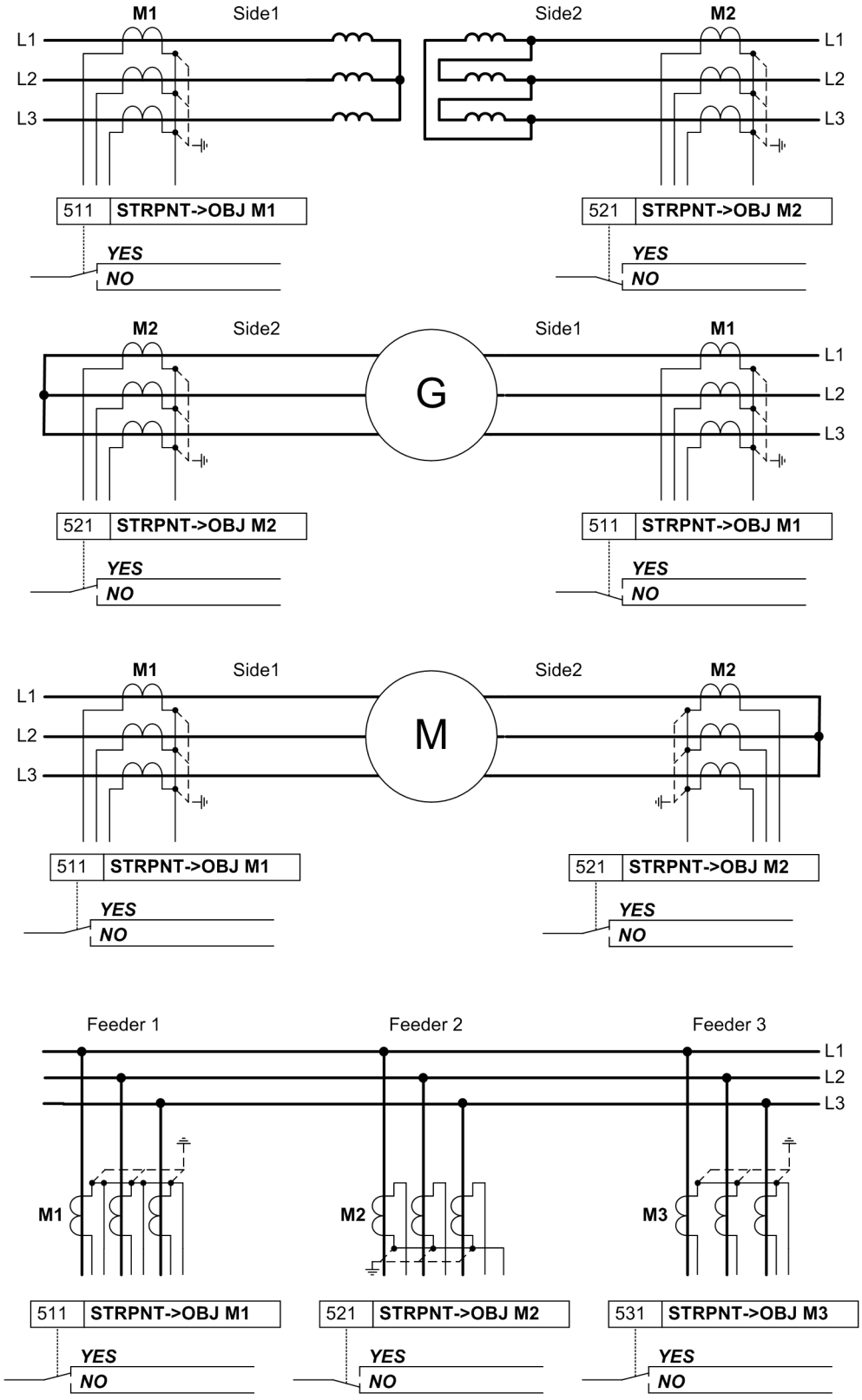

Figure 2-13 Position of CT starpoints at 3-phase measuring locations - example

Similar applies for the further measuring locations (assigned or non-assigned to the main protected object). Only those addresses will appear during setting which are available in the actual device version.

Measuring Location 2

- Address 521 **STRPNT->OBJ M2** starpoint position of CTs for measuring location M2,
- Address 522 **IN-PRI CT M2** prim. rated current of CTs for measuring location M2,
- Address 523 **IN-SEC CT M2** sec. nominal current CT for measuring location M2,

Measuring Location 3

- Address 531 **STRPNT->OBJ M3** starpoint position of CT for measuring location M3,
- Address 532 **IN-PRI CT M3** prim. rated current of CTs for measuring location M3,
- Address 533 **IN-SEC CT M3** sec. nominal current CT for measuring location M3,

Measuring Location 4

- Address 541 **STRPNT->OBJ M4** starpoint position of CT for measuring location M4,
- Address 542 **IN-PRI CT M4** prim. rated current of CTs for measuring location M4,
- Address 543 **IN-SEC CT M4** sec.. rated current of CTs for measuring location M4.

Measuring Location 5

- Address 551 **STRPNT->OBJ M5** starpoint position of CTs for measuring location M5,
- Address 552 **IN-PRI CT M5** prim. rated current of CTs for measuring location M5,
- Address 553 **IN-SEC CT M5** sec. nominal current CT for measuring location M5,

If the device is applied as transverse differential protection for generators or motors, special considerations must be observed for the CT connections: In a healthy operational state all currents flow into the protected object, i.e. in contrast to the other applications. Therefore you have to set a „wrong“ polarity for one of the current transformer sets. The part windings of the machine windings correspond to the „sides“.

One example is illustrated in figure 2-14. Although the starpoints of both current transformer sets are looking towards the protected object, the opposite setting is to be selected for “side 2”: **STRPNT->OBJ M2** = ***NO***.

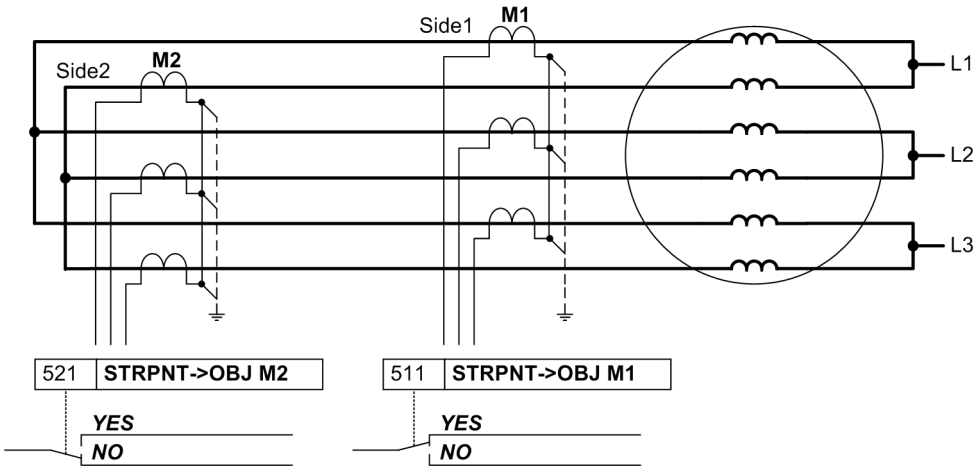

Figure 2-14 Current transformer starpoints in transverse differential protection - example

Current Transformer Data for Single-phase Busbar Protection

The operational nominal currents of each feeder have already been set under margin heading „Object Data with Busbars (1-phase Connection) with up to 9 or 12 Feeders“. The feeder currents are referred to these nominal feeder currents. However, the rated currents of the current transformers may differ from the nominal feeder currents. Therefore, the device must be informed about the current transformer data, too. In figure
2-15 the rated CT currents are 1000 A (feeder 1), 500 A (feeder 2 and 3).

If rated currents have already been matched by external equipment (e.g. by matching transformers), the rated current value, used as a base value for the calculation of the external matching transformers, is to be indicated uniform. Normally, it is the rated operational current. The same applies if external summation transformers are used.

Indicate the rated primary transformer current for each feeder. The interrogation only applies to data of the number of feeders determined during the configuration according to section 2.1.4, margin heading „Global Data for 1-phase Busbar Protection“ (address 216 **NUMBER OF ENDS**).

For rated secondary currents please make sure that rated secondary transformer currents match with the rated current of the corresponding current input of the device. Rated secondary currents of a device can be matched. If summation transformers are used, the rated current at the outgoing side is usually 100 mA. For rated secondary currents a value of **0.1** A is therefore set for all feeders.

Indication of the starpoint position of the current transformers determines the polarity of the current transformers. Set for each feeder if the starpoint is looking towards the busbar or not. Figure 2-15 shows an example of 3 feeders in which the transformer starpoint in feeder 1 and feeder 3 are looking towards the busbar, unlike feeder 2.

If external interposed transformers are used, it is presumed that these are connected with correct polarity.

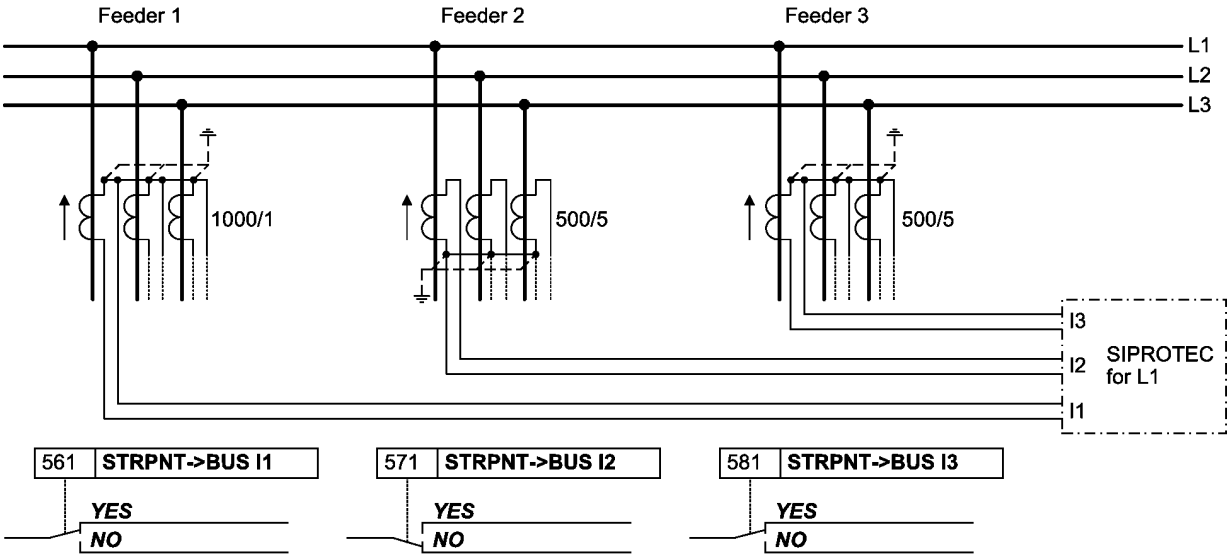

Figure 2-15 Position of the CT starpoints — example for phase L1 of a busbar with 3 feeders

Hereinafter the parameters for the individual feeders:

Feeder 1

- Address 561 **STRPNT->BUS I1** = transformer starpoint versus busbar for feeder 1,
- Address 562 **IN-PRI CT I1** = rated primary transformer current for feeder 1,
- Address 563 **IN-SEC CT I1** = rated secondary transformer current for feeder 1.

Feeder 2

- Address 571 **STRPNT->BUS I2** = transformer starpoint versus busbar for feeder 2,
- Address 572 **IN-PRI CT I2** = rated primary transformer current for feeder 2,
- Address 573 **IN-SEC CT I2** = rated secondary current for feeder 2.

Feeder 3

- Address 581 **STRPNT->BUS I3** = transformer starpoint versus busbar for feeder 3,
- Address 582 **IN-PRI CT I3** = rated primary transformer current for feeder 3,
- Address 583 **IN-SEC CT I3** = rated secondary current for feeder 3.

Feeder 4

- Address 591 **STRPNT->BUS I4** = transformer starpoint versus busbar for feeder 4,
- Address 592 **IN-PRI CT I4** = rated primary transformer current for feeder 4,
- Address 593 **IN-SEC CT I4** = rated secondary current for feeder 4.

Feeder 5

- Address 601 **STRPNT->BUS I5** = transformer starpoint versus busbar for feeder 5,
- Address 602 **IN-PRI CT I5** = rated primary transformer current for feeder 5,
- Address 603 **IN-SEC CT I5** = rated secondary current for feeder 5.

Feeder 6

- Address 611 **STRPNT->BUS I6** = transformer starpoint versus busbar for feeder 6,
- Address 612 **IN-PRI CT I6** = rated primary transformer current for feeder 6,
- Address 613 **IN-SEC CT I6** = rated secondary current for feeder 6.

Feeder 7

- Address 621 **STRPNT->BUS I7** = transformer starpoint versus busbar for feeder 7
- Address 622 **IN-PRI CT I7** = rated primary transformer current for feeder 7,
- Address 623 **IN-SEC CT I7** = rated secondary current for feeder 7.

Feeder 8

- Address 631 **STRPNT->BUS I8** = transformer starpoint versus busbar for feeder 8,
- Address 632 **IN-PRI CT I8** = rated primary transformer current for feeder 8,
- Address 633 **IN-SEC CT I8** = rated secondary current for feeder 8.

Feeder 9

- Address 641 **STRPNT->BUS I9** = transformer starpoint versus busbar for feeder 9,
- Address 642 **IN-PRI CT I9** = rated primary transformer current for feeder 9,
- Address 643 **IN-SEC CT I9** = rated secondary current for feeder 9.

The following settings are only available in 7UT635:

Feeder 10

- Address 651 **STRPNT->BUS I10** = transformer starpoint versus busbar for feeder 10,
- Address 652 **IN-PRI CT I10** = rated primary transformer current for feeder 10,
- Address 653 **IN-SEC CT I10** = rated secondary current for feeder 10.

Feeder 11

- Address 661 **STRPNT->BUS I11** = transformer starpoint versus busbar for feeder 11,
- Address 662 **IN-PRI CT I11** = rated primary transformer current for feeder 11,
- Address 663 **IN-SEC CT I11** = rated secondary current for feeder 11.

Feeder 12

- Address 671 **STRPNT->BUS I12** = transformer starpoint versus busbar for feeder 12,
- Address 672 **IN-PRI CT I12** = rated primary transformer current for feeder 12,
- Address 673 **IN-SEC CT I12** = rated secondary current for feeder 12.

Current Transformer Data for 1-phase Further Current Inputs

The number of 1-phase further current inputs depends on the device version. Such inputs are used for detection of the starpoint current of an earthed winding of a transformer, generator, or motor, shunt reactor, or neutral reactor, or for different 1-phase measuring purposes. The assignment has already been carried out in Subsection 2.1.4, margin heading „Assignment of Auxiliary 1-phase Measuring Locations“, the assignment of the protection functions will be done in section „Assignment of the Protection Functions to the Measuring Locations/Sides“. These settings concern exclusively the current transformer data, regardless of whether or not they belong to the main protected object.

The device requests also the polarity and rated currents of the connected 1-phase CTs. The clarifications below comprise all possible settings, in the actual case only those addresses will appear which are available in the actual version and defined in the topology.

Enter the primary rated current of each further 1-phase current transformer which is connected and assigned to a further 1-phase current input of the device. Please note the previous assignment of the measuring locations (see section 2.1.4.1, margin heading „Assignment of Auxiliary 1-phase Measuring Locations“).

Distinction must be made for the secondary rated currents whether the 1-phase current input is a „normal“ or a „high-sensitivity“ input of the device:

If a „normal“ input is concerned, set the secondary current in the same way as for the 3-phase current inputs. Please make sure that the rated secondary CT current matches the rated current of the corresponding current input of the device. Rated secondary currents of the device can be matched.

If a „high-sensitivity“ current input is used, no rated secondary current is defined. In order to calculate primary values for such measuring inputs (e.g. for setting in primary values or for output of primary measured values), the conversion factor I_{Nprim}/I_{Nsec} of the current transformer is set.

The polarity of a 1-phase current input is important for correct function of the differential protection and the restricted earth fault protection. If only the magnitude of the current is of interest (e.g. for earth overcurrent protection or single-phase overcurrent protection) the polarity is irrelevant, Even though a high-sensitive 1-phase current input has been selected, the polarity setting is omitted as it only processes the current amount.

For polarity information, set to which device terminal **the** side of the current transformer facing the earth electrode is connected, i.e. not the side facing the starpoint itself. The secondary earthing point of the CT is of no interest. Figure 2-16 shows the alternatives using as an example an earthed transformer winding for auxiliary current IX1.

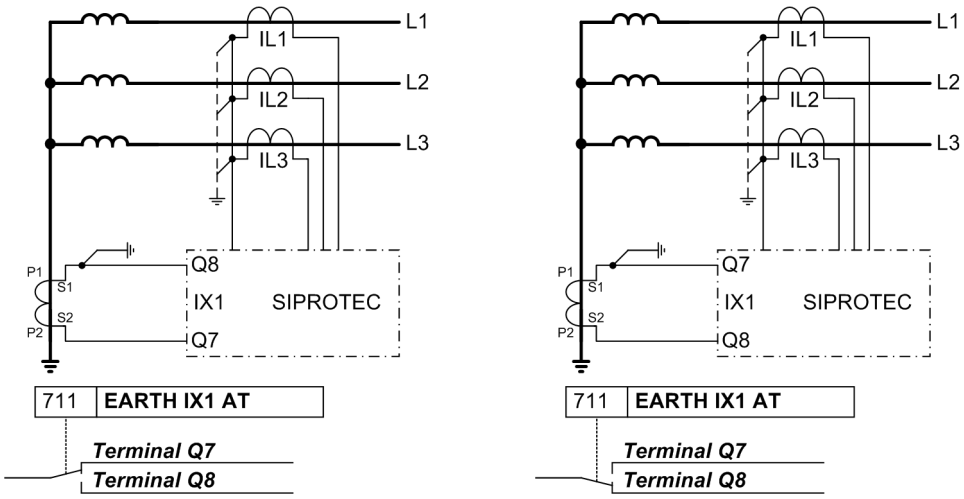

Figure 2-16 Polarity check for 1-phase current inputs IX1

The following applies for the (max. 4, dependent on device version on connections) 1-phase current inputs:

For the auxiliary measuring input X1

- Address 711 **EARTH IX1 AT** with the options ***Terminal Q7*** or ***Terminal Q8***,
- Address 712 **IN-PRI CT IX1** = primary rated CT current,
- Address 713 **IN-SEC CT IX1** = secondary rated CT current.

For the auxiliary measuring input X2

- Address 721 **EARTH IX2 AT** with the options ***Terminal N7*** or ***Terminal N8***,
- Address 722 **IN-PRI CT IX2** = primary rated CT current,
- Address 723 **IN-SEC CT IX2** = secondary rated CT current.

For the auxiliary measuring input X3

- Address 731 **EARTH IX3 AT** with the options ***Terminal R7*** or ***Terminal R8*** (not for high-sensitivity input),
- Address 732 **IN-PRI CT IX3** = primary rated CT current,
- Address 733 **IN-SEC CT IX3** = sec. rated CT current (not for high-sensitivity input),
- Address 734 **FACTOR CT IX3** = CT transform. ratio (only for high-sensitivity input).

For the auxiliary measuring input X4

- Address 741 **EARTH IX4 AT** with the options ***Terminal P7*** or ***Terminal P8*** (not for high-sensitivity input),
- Address 742 **IN-PRI CT IX4** = primary rated CT current,
- Address 743 **IN-SEC CT IX4** = sec. rated CT current (not for high-sensitivity input),
- Address 744 **FACTOR CT IX4** = CT transform. ratio (only for high-sensitivity input).

Note

For devices in panel surface mounted housing, terminal designations apply as per table 2-4.

Table 2-4 Terminal designation with surface mounted housing

Flush mounted housing	Corresponds to surface mounted housing, terminal			1-phase current input
	7UT613	7UT633	7UT635	
Terminal Q7	22	47	47	IX1
Terminal Q8	47	97	97	
Terminal N7	11	36	36	IX2
Terminal N8	36	86	86	
Terminal R7	18	43	43	IX3
Terminal R8	43	93	93	
Terminal P7	–	–	32	IX4
Terminal P8	–	–	82	

Voltage Transformer Data

If the device is equipped with measuring voltage inputs and these inputs are assigned, the voltage transformer data are of relevance.

For the 3-phase voltage input, you set at address 801 **UN-PRI VT SET** the primary rated VT voltage (phase-to-phase), and at address 802 **UN-SEC VT SET** the secondary rated VT voltage.

If the reverse power protection with high-precision active power measurement is used, a correction of the angle faults of the current and voltage transformers is particularly important, as in this case a very low active power is computed from a very high apparent power (for small cos φ). In other cases, absolute compliance with the angle of measured values is usually not required. In 7UT613/63x angle errors are corrected in the voltage paths. The question of which current transformer set refers to the correction, is thus irrelevant, and an influence on the currents for differential protection and all current functions by this correction is avoided. All power functions are corrected on the other side. The angle correction is not important to the pure voltage functions (overexcitation protection, undervoltage protection, overvoltage protection, frequency protection), as the precise phase angle of the voltages is not relevant there. Set the resulting angle difference of the current and voltage transformers relevant for the reverse power protection under address 803 **CORRECT. U Ang**. In electrical machines, determination of the corrective value is possible at primary commissioning of the machine.

For the 1-phase voltage input, you set at address 811 **UN-PRI VT U4** the primary rated voltage of the connected 1-phase voltage transformer, and at address 812 **UN-SEC VT U4** the secondary voltage. The addresses 811 and 812 must be set if the U4 transformer set has a different reference than the **VT SET**.

If the single-phase voltage input of a U4 transformer is a Uen transformer and equally assigned like the main transformer set, then a different transformation ratio of the single-phase voltage transformer from the three-phase voltage transformer set can be set under address 816 **Uph / Udelta**. If the single-phase voltage input at the open delta winding e-n of the voltage transformer set is connected, the voltage transformation of the transformer is normally as follows:

$$\frac{U_{N\,prim}}{\sqrt{3}} / \frac{U_{N\,sec}}{\sqrt{3}} / \frac{U_{N\,sec}}{3}$$

Factor Uph/Uen (secondary voltage) 3/sqrt(3) = $\sqrt{3} \approx$ **1.73** must be used. For other transformation ratios, e.g. if the residual voltage is formed by an interposed transformer set, the factor must be adapted accordingly. This factor is of importance for the monitoring of the measured values and the scaling of the measurement and disturbance recording signals.

If the U4 transformer set is a Uen transformer, then address 817 **Uph(U4)/Udelta** must be set.

817 **Uph(U4)/Udelta** (0.10-9.99 ; without 0)

2.1.4.3 Assignment of Protection Functions to Measuring Locations / Sides

Main Protection Function = Differential Protection

The main protected object, i.e. the protected object which has been selected at address 105 **PROT. OBJECT** during the configuration of the protection function, is always defined by its sides, each of which can have one or multiple measuring locations assigned to them (section 2.1.4 under „Assignment of 3-phase Measuring Locations“ and subsequent margin headings. Combined with the object and transformer data according to subsection „General Power System Data“, the sides define unambiguously the manner in which to process the currents supplied by the measuring locations (CT sets) for the main protection function, differential protection (section 2.2.1).

In the example shown in Figure 2-2, the 3-phase measuring locations **M1** and **M2** have been assigned to side **S1** (high-voltage side of the transformer). This ensures that the summated currents flowing through M1 and M2 towards the protected object are evaluated as currents flowing into the transformer side S1. Likewise, the currents flowing through **M3** and **M4** towards the protected object are evaluated as currents flowing into the transformer. Where an external current flows in via M4 and out again through M3, the sum of $\underline{I}_{M3} + \underline{I}_{M4} = 0$, i.e. no current flows into the protected object at that point. Nevertheless both currents are used for restraint of the differential protection. For more details, please refer to the description of the differential protection function (subsection 2.2.1).

By the assignment of the auxiliary measuring location **X3** to side S1 of the transformer, it is defined that the 1-phase earth fault current measured at X3 flows into the starpoint of the high-voltage winding, (subsection 2.1.4, „Topology of the Protected Object“ under margin heading „Assignment of Auxiliary 1-phase Measuring Locations“).

As the topology thus provides for the differential protection a full description of the protected object with all its sides and measuring locations, no further information is required for this function. There are, however, various possibilities to enter information for the other protection functions.

Restricted Earth Fault Protection

Normally, the restricted earth fault protection (section 2.3) is assigned to one side of the main protected object, namely the side with the earthed starpoint. In the example shown in Figure 2-2, this would be the side **S1**; therefore, address 413 **REF PROT. AT** would be set to ***Side 1*** The 3-phase measuring locations **M1** and **M2** have been assigned to this side during the definition of the topology. Therefore, the sum of the currents $\underline{I}_{M1} + \underline{I}_{M2}$ is considered to be flowing into side S1 of the transformer.

By the assignment of the auxiliary measuring location **X3** to side **S1** of the transformer, it is defined that the 1-phase earth fault current measured at X3 flows into the starpoint of the higher voltage winding, (subsection 2.1.4, „Topology of the Protected Object“ under margin heading „Assignment of Auxiliary 1-phase Measuring Locations“).

If the main protected object is an auto-transformer, the restricted earth fault protection must use the currents of both power supply circuits of the auto-connected winding, since it cannot be determined which portion of the earth fault current from the earthing electrode goes to the full winding and which to the tap. In Figure 2-6 the currents of the 3-phase measuring locations **M1** and **M2** flow into the auto-connected winding, the 1-phase earth fault current is measured at the auxiliary measuring location **X3**. The 3-phase measuring location M3 is irrelevant for the restricted earth fault protection.

Since the assignment of the 3-phase measuring locations and of the auxiliary measuring location is also defined by the topology, you only need to set ***auto-connected*** for the restricted earth fault protection **REF PROT. AT**. This is also true if the auto-connected winding has more than one tap.

But the restricted earth fault protection can also act upon an object other than the main protected object. In Figure 2-3 the main protected object is a three-winding transformer with the sides S1, S2 and S3. The 3-phase measuring location **M5**, on the other hand, belongs to the neutral reactor. You have now the option to use the restricted earth fault protection for this reactor. Since for this further protected object no sides are defined, you can assign here the restricted earth fault protection to the 3-phase measuring location M5, which is not assigned to the main protected object: set address 413 **REF PROT. AT** to ***n.assigMeasLoc5***.

By the assignment of the auxiliary measuring location **X4** to the 3-phase measuring location M5, it is defined that the 1-phase earth fault current measured at X4 belongs to the neutral reactor connected to M5 (subsection „Topology of the Protected Object“ under margin heading „Assignment of Auxiliary 1-phase Measuring Locations“).

7UT613/63x provides a second earth fault differential protection. A earth fault differential protection for both of the windings can be implemented in a YNyn transformer, for example, that is earthed at both starpoints. Or use the first earth fault differential protection for an earthed transformer winding and the second for a further protective object, e.g. a neutral reactor. Set address 414 **REF PROT. 2 AT** in accordance with the aspects as for the first earth fault differential protection.

Further 3-phase Protection Functions

A reminder: the single-phase power transformer is treated like a three-phase power transformer (without phase L2). Therefore, the three-phase protection functions apply also for this (except the overcurrent protection for zero sequence current and asymmetrical load protection).

These further protection functions can operate on the main protected object or on a further protected object. The possibilities depend on the definitions made in the topology.

For the main protection object, you normally choose one side for which the protection function will be effective. If in the example shown in Figure 2-2 you want to use the time overcurrent protection for phase currents (Section 2.4.1) as a backup protection on the high-voltage side, you set address 420 **DMT/IDMT Ph AT** to ***Side 1***. The phase overcurrent protection then acquires the sum of the currents flowing through the measuring locations M1 and M2 (for each phase) towards the transformer.

You can also set the phase overcurrent protection to be effective for one single measuring location of the main protected object. If in the same example you want to use the overcurrent protection as a protection for the auxiliaries system circuit, you set address 420 **DMT/IDMT Ph AT** to ***Measuring loc.3***.

Finally, you can also set the overcurrent protection to be effective for another protection object, i.e. assign it to a 3-phase measuring location which is not assigned to the main protection object. To do so, you select that measuring location. In the example shown in Figure 2-2, you can use the overcurrent protection as a protection for the cable feeder by setting address 420 **DMT/IDMT Ph AT** to ***Measuring loc.5***.

As the above examples show, the protection function can be assigned as desired. Generally speaking:

- Where a 3-phase protection function is assigned to a measuring location, the currents are acquired at this location, regardless of whether it is assigned to the main protected object or not.
- Where a 3-phase protection function is assigned to a side (of the main protected object), the sum of the currents flowing in at this side from the measuring locations assigned to it is acquired (for each phase).
- Please note also that the earth overcurrent protection will receive from the auxiliary measuring location assigned here not only its measured value, but also circuit breaker information (current flow and manual-close detection).

The same basic principles apply to the two additional overcurrent protection functions. With reference to the example in figure 2-2, the first overcurrent protection can be determined as reserve protection at the high-voltage side by setting address 420 **DMT/IDMT Ph AT**= ***Side 1*** (as above), the second overcurrent protection as protection of the station's own requirement feeder (address 430 **DMT/IDMT Ph2 AT** = ***Measuring loc.3***) and the third overcurrent protection as protection of the cable feeder (address 432 **DMT/IDMT Ph3 AT** = ***Measuring loc.5***).

The same applies also to the assignment of the overcurrent protection for zero sequence current (section 2.4.1) in address 422 **DMT/IDMT 3IO AT**. Please keep in mind that this protection function acquires the sum of the phase currents and is therefore considered as a three-phase protection function. The assignment, however, can differ from the assignment used by the overcurrent protection for phase currents. This means that in the example shown in figure 2-2, the overcurrent protection can be easily used for phase currents (**DMT/IDMT Ph AT**) at the higher voltage side of the transformer (***Side 1***), and the overcurrent protection for residual currents (**DMT/IDMT 3IO AT**) at the lower voltage side (***Measuring loc.4***).

The two additional protection functions in addresses 434 **DMT/IDMT3IO-2AT** can also be assigned to the second residual current overcurrent protection and address 436 **DMT/IDMT3IO-3AT** to the third residual overcurrent protection.

The same options exist for the unbalanced load protection (address 440 **UNBAL. LOAD AT**, section 2.8), which can also be used at a side of the main protection object or at any - assigned or non-assigned - 3-phase measuring location.

The overload protection (section 2.9) always refers to one side of the main protected object. Consequently, address 442 **THERM. O/L AT** allows to select only a side, not a measuring location.

Since the cause for overload comes from outside of the protected object, the overload current is a traversing current. Therefore it does not necessarily have to be detected at the infeeding side.

- For transformers with tap changer the overload protection is assigned to the non-regulated side as it is the only side where we have a defined relation between rated current and rated power.
- For generators, the overload protection is usually on the starpoint side.
- For motors and shunt reactors, the overload protection is connected to the current transformers of the feeding side.
- For series reactors or short cables, any side can be selected.
- For busbar sections or overhead lines, the overload protection is, generally, not used since climate and weather conditions (air temperature, wind) change too quickly and it is therefore not reasonable to calculate the temperature rise. In this case, however, a current-dependent alarm stage is able to warn of an imminent overload.

The same applies to the second overload protection that is assigned to a side under address 444 **THERM. O/L 2 AT**.

The overexcitation protection (section 2.11) is only possible for devices with voltage connection, and requires a measuring voltage to be connected and declared in the topology (section „Topology of the Protected Object“ under margin heading „Assignment of Voltage Measuring Inputs“). It is not necessary to assign the protection function, since it always evaluates the three-phase measuring voltage at the voltage input, and the frequency derived from it. The same applies to the undervoltage protection, the overvoltage protection and the frequency protection.

When using the circuit breaker failure protection (section 2.17) (address 470 **BREAKER FAIL.AT**) please make sure that the assignment of this protection function corresponds to that side or measuring location whose current actually flows through the circuit breaker to be monitored. In the example shown in Figure 2-2, the assignment must be set in address **BREAKER FAIL.AT** to ***Side 1*** if you want to monitor the circuit breaker of the high-voltage side, since both currents flow through the breaker (via M1 and M2). If on the other hand you want to monitor the circuit breaker of the cable feeder, you set address **BREAKER FAIL.AT** to ***Measuring loc.5***. When assigning the circuit breaker failure protection function, make sure that the breaker auxiliary contacts or feedback information are correctly configured and assigned.

If you do not wish to assign any measuring location or side to the circuit breaker failure protection because you want only the breaker position to be processed, set **BREAKER FAIL.AT** to ***Ext. switchg. 1***. In this case, the protection handles only the breaker position but not any current flow for its operation. This allows even to monitor a circuit breaker the current of which is not connected to the device. But you have to ensure that the feedback information of this breaker is correctly connected and configured.

With the second circuit breaker failure protection an additional circuit breaker can be monitored. The aspects regarding the assignment in address 471 **BREAKER FAIL2AT** correspond with those for the first circuit breaker failure protection.

Further 1-phase Protection Functions

The 1-phase protection functions evaluate the 1-phase measuring current of 1-phase additional measuring input. It is irrelevant in this context whether the connect current belongs to the main protected object or not. Only the current connected to the additional measuring input is decisive.

The device must now be informed which current is to be evaluated by the 1-phase protection functions.

Address 424 **DMT/IDMT E AT** assigns the time overcurrent protection for earth current (section 2.5) to a 1-phase additional measuring input. In most cases this will be the current flowing in the neutral leads of an earthed winding, measured between the starpoint and the earth electrode. In figure 2-2 the auxiliary measuring location X3 would be a good choice; so you set here ***AuxiliaryCT IX3***. As this protection function is autonomous, i.e. independent of any other protection function, any 1-phase additional measuring input can be used. This requires, however, that it is not a high-sensitivity measuring input and, of course, that it is connected. Please note also that the earth overcurrent protection will receive from the auxiliary measuring location assigned here not only its measured value, but also circuit breaker information (current flow and manual-close detection).

The second earth overcurrent protection can be assigned to another single-phase measuring location according to the same aspects under address 438 **DMT/IDMT E2 AT**.

Address 427 **DMT 1PHASE AT** assigns the single-phase time overcurrent protection (section 2.7). This protection function is mainly used for high-sensitivity current measurement, e.g. for tank leakage protection or high-impedance differential protection. Therefore a high-sensitivity 1-phase additional measuring input is particularly suited for it. In figure 2-2 this would be the auxiliary measuring location X4; so you set this address to ***AuxiliaryCT IX4***. However, it is also possible to assign this protection function to any other additional measuring input used, regardless of its sensitivity.

2.1.4.4 Circuit Breaker Data

Circuit Breaker Status

Various protection and ancillary functions require information on the status of the circuit breaker for faultless operation. Command processing makes also use of the feedback information from the switching devices.

If, for instance, the circuit breaker failure protection is used to monitor the reaction of a specific circuit breaker (CB), the protection device must know the measuring location at which the current flowing through the breaker is acquired, and the binary inputs which provide information on the breaker status. During the configuration of the binary inputs you merely assigned the (physical) binary inputs to the (logic) functions. The device, however, must also know to which measuring location(s) the circuit breaker is assigned.

The breaker failure protection — and thus the circuit breaker that is monitored by it — is normally assigned to a measuring location or to a side (see above, under margin heading „Further 3-Phase Protection Functions“). You can therefore set addresses 831 to 835 **SwitchgCBaux S1** to **SwitchgCBaux S5** if a side is concerned, or addresses 836 to 840 **SwitchgCBaux M1** to **SwitchgCBaux M5** if a measuring location is concerned.

You can, alternatively, monitor any desired circuit breaker, exclusively by means of the CB position indication, i.e. without consideration of current flow. In this case you must have selected 470 under address **BREAKER FAIL.AT** ***Ext. switchg. 1***. You have then to select the corresponding breaker feedback information under address 841 **SwitchgCBaux E1** (switching device auxiliary contact of external breaker).

Select the address which corresponds to the assignment of the circuit breaker failure protection. There, you choose from the following options:

1. If during the configuration of the binary inputs you have defined the circuit breaker as a control object, and allocated the appropriate feedback indications, you choose these feedback indications to determine the circuit breaker position, e.g. „Q0“. The breaker position is then automatically derived from the circuit breaker Q0.
2. If during the configuration of the binary inputs you have generated a single-point indication which is controlled by the NC or NO auxiliary contacts of the circuit breaker, you select this indication.
3. If during the configuration of the binary inputs you have generated a double indication which is controlled by the NC or NO auxiliary contact of the circuit breaker (feedback from the protected object), you select this indication.
4. If you have generated appropriate indications using CFC, you can select these indications.

In any case, you must make sure that the selected option indicates also the position of the monitored circuit breaker. If you have not yet generated an indication for control and feedback of the breaker to be monitored you should do so now. Detailed information is given in the SIPROTEC 4 System Description.

Example:

The group „Control Devices“ of the configuration matrix contains a double-point indication „Q0“. Assuming this should be the breaker to be monitored, you have determined during configuration the physical inputs of the device at which the feedback indications of the breaker Q0 arrive. For example, if the breaker failure protection should monitor the breaker at the high-voltage side (= Side 1) of the transformer in Figure 2-2 you set:

Address 831 **SwitchgCBaux S1** (because breaker at Side S1 is monitored) = „Q0“ (because indication „Q0“ indicates feedback of the breaker).

Of course, you can define any desired input indication which indicates the breaker position via an correspondingly assigned physical input.

Manual Close Indication of a Circuit Breaker

If a protection function is to make use of an external manual-close command indicated via a binary input, you must have selected that logical input indication during the configuration of the binary inputs that corresponds to the side or measuring location to which the protection function is assigned. From the internal control, the device uses the same switching objects that were selected at the addresses 831 to 840.

Example:

If you have assigned the time overcurrent protection for phase currents to measuring location M4 and want it to receive the manual-close command from circuit breaker CB2, you connect the Close command for breaker CB2 to a binary input and allocate that input to „>ManualClose M4“ (No 30354).

Command Duration

The minimum trip command duration 851 is set in address **TMin TRIP CMD**. This duration is valid for all protection functions which can issue a trip command. This parameter can only be altered in DIGSI at **Display Additional Settings**.

2.1.4.5 Settings

Addresses which have an appended "A" can only be changed with DIGSI, under Additional Settings.

Addr.	Parameter	Setting Options	Default Setting	Comments
211	No Conn.MeasLoc	2 3 4 5	3	Number of connected Measuring Locations
212	No AssigMeasLoc	2 3 4 5	3	Number of assigned Measuring Locations
213	NUMBER OF SIDES	2 3 4 5	3	Number of Sides

Addr.	Parameter	Setting Options	Default Setting	Comments
216	NUMBER OF ENDS	3 4 5 6 7 8 9 10 11 12	6	Number of Ends for 1 Phase Busbar
220	ASSIGNM. 2M,2S	M1,M2	M1,M2	Assignment at 2 assig.Meas.Loc./ 2 Sides
221	ASSIGNM. 3M,2S	M1+M2,M3 M1,M2+M3	M1+M2,M3	Assignment at 3 assig.Meas.Loc./ 2 Sides
222	ASSIGNM. 3M,3S	M1,M2,M3	M1,M2,M3	Assignment at 3 assig.Meas.Loc./ 3 Sides
223	ASSIGNM. 4M,2S	M1+M2,M3+M4 M1+M2+M3,M4 M1,M2+M3+M4	M1+M2,M3+M4	Assignment at 4 assig.Meas.Loc./ 2 Sides
224	ASSIGNM. 4M,3S	M1+M2,M3,M4 M1,M2+M3,M4 M1,M2,M3+M4	M1+M2,M3,M4	Assignment at 4 assig.Meas.Loc./ 3 Sides
225	ASSIGNM. 4M,4S	M1,M2,M3,M4	M1,M2,M3,M4	Assignment at 4 assig.Meas.Loc./ 4 Sides
226	ASSIGNM. 5M,2S	M1+M2+M3,M4+M5 M1+M2,M3+M4+M5 M1+M2+M3+M4,M5 M1,M2+M3+M4+M5	M1+M2+M3,M4+M5	Assignment at 5 assig.Meas.Loc./ 2 Sides
227	ASSIGNM. 5M,3S	M1+M2,M3+M4,M5 M1+M2,M3,M4+M5 M1,M2+M3,M4+M5 M1+M2+M3,M4,M5 M1,M2+M3+M4,M5 M1,M2,M3+M4+M5	M1+M2,M3+M4,M5	Assignment at 5 assig.Meas.Loc./ 3 Sides
228	ASSIGNM. 5M,4S	M1+M2,M3,M4,M5 M1,M2+M3,M4,M5 M1,M2,M3+M4,M5 M1,M2,M3,M4+M5	M1+M2,M3,M4,M5	Assignment at 5 assig.Meas.Loc./ 4 Sides
229	ASSIGNM. 5M,5S	M1,M2,M3,M4,M5	M1,M2,M3,M4,M5	Assignment at 5 assig.Meas.Loc./ 5 Sides
230	ASSIGNM. ERROR	No AssigMeasLoc No of sides	without	Assignment Error
241	SIDE 1	auto-connected	auto-connected	Side 1 is assigned to
242	SIDE 2	auto-connected	auto-connected	Side 2 is assigned to
243	SIDE 3	auto-connected compensation earth.electrode	auto-connected	Side 3 is assigned to
244	SIDE 4	auto-connected compensation earth.electrode	compensation	Side 4 is assigned to

Addr.	Parameter	Setting Options	Default Setting	Comments
251	AUX. CT IX1	Not connected conn/not assig. Side 1 earth Side 2 earth Side 3 earth Side 4 earth MeasLoc.1 earth MeasLoc.2 earth MeasLoc.3 earth MeasLoc.4 earth	Not connected	Auxiliary CT IX1 is used as
252	AUX. CT IX2	Not connected conn/not assig. Side 1 earth Side 2 earth Side 3 earth Side 4 earth MeasLoc.1 earth MeasLoc.2 earth MeasLoc.3 earth MeasLoc.4 earth	Not connected	Auxiliary CT IX2 is used as
253	AUX. CT IX3	Not connected conn/not assig. Side 1 earth Side 2 earth Side 3 earth Side 4 earth MeasLoc.1 earth MeasLoc.2 earth MeasLoc.3 earth MeasLoc.4 earth	Not connected	Auxiliary CT IX3 is used as
254	AUX. CT IX4	Not connected conn/not assig. Side 1 earth Side 2 earth Side 3 earth Side 4 earth Side 5 earth MeasLoc.1 earth MeasLoc.2 earth MeasLoc.3 earth MeasLoc.4 earth MeasLoc.5 earth	Not connected	Auxiliary CT IX4 is used as
255	AUX CT IX3 TYPE	1A/5A input sensitive input	1A/5A input	Type of auxiliary CT IX3
256	AUX CT IX4 TYPE	1A/5A input sensitive input	1A/5A input	Type of auxiliary CT IX4
261	VT SET	Not connected Side 1 Side 2 Side 3 Measuring loc.1 Measuring loc.2 Measuring loc.3 Busbar	Measuring loc.1	VT set UL1, UL2, UL3 is assigned

Addr.	Parameter	Setting Options	Default Setting	Comments
262	VT U4	Not connected conn/not assig. Side 1 Side 2 Side 3 Measuring loc.1 Measuring loc.2 Measuring loc.3 Busbar	Measuring loc.1	VT U4 is assigned
263	VT U4 TYPE	Udelta transf. UL1E transform. UL2E transform. UL3E transform. UL12 transform. UL23 transform. UL31 transform. Ux transformer	Udelta transf.	VT U4 is used as
270	Rated Frequency	50 Hz 60 Hz 16,7 Hz	50 Hz	Rated Frequency
271	PHASE SEQ.	L1 L2 L3 L1 L3 L2	L1 L2 L3	Phase Sequence
276	TEMP. UNIT	Celsius Fahrenheit	Celsius	Unit of temperature measurement
311	UN-PRI SIDE 1	0.4 .. 800.0 kV	110.0 kV	Rated Primary Voltage Side 1
312	SN SIDE 1	0.20 .. 5000.00 MVA	38.10 MVA	Rated Apparent Power of Transf. Side 1
313	STARPNT SIDE 1	Earthed Isolated	Earthed	Starpoint of Side 1 is
314	CONNECTION S1	Y D Z	Y	Transf. Winding Connection Side 1
321	UN-PRI SIDE 2	0.4 .. 800.0 kV	11.0 kV	Rated Primary Voltage Side 2
322	SN SIDE 2	0.20 .. 5000.00 MVA	38.10 MVA	Rated Apparent Power of Transf. Side 2
323	STARPNT SIDE 2	Earthed Isolated	Earthed	Starpoint of Side 2 is
324	CONNECTION S2	Y D Z	Y	Transf. Winding Connection Side 2

Addr.	Parameter	Setting Options	Default Setting	Comments
325	VECTOR GRP S2	0 1 2 3 4 5 6 7 8 9 10 11	0	Vector Group Numeral of Side 2
331	UN-PRI SIDE 3	0.4 .. 800.0 kV	11.0 kV	Rated Primary Voltage Side 3
332	SN SIDE 3	0.20 .. 5000.00 MVA	10.00 MVA	Rated Apparent Power of Transf. Side 3
333	STARPNT SIDE 3	Earthed Isolated	Earthed	Starpoint of Side 3 is
334	CONNECTION S3	Y D Z	Y	Transf. Winding Connection Side 3
335	VECTOR GRP S3	0 1 2 3 4 5 6 7 8 9 10 11	0	Vector Group Numeral of Side 3
341	UN-PRI SIDE 4	0.4 .. 800.0 kV	11.0 kV	Rated Primary Voltage Side 4
342	SN SIDE 4	0.20 .. 5000.00 MVA	10.00 MVA	Rated Apparent Power of Transf. Side 4
343	STARPNT SIDE 4	Earthed Isolated	Earthed	Starpoint of Side 4 is
344	CONNECTION S4	Y D Z	Y	Transf. Winding Connection Side 4
345	VECTOR GRP S4	0 1 2 3 4 5 6 7 8 9 10 11	0	Vector Group Numeral of Side 4

Addr.	Parameter	Setting Options	Default Setting	Comments
351	UN-PRI SIDE 5	0.4 .. 800.0 kV	11.0 kV	Rated Primary Voltage Side 5
352	SN SIDE 5	0.20 .. 5000.00 MVA	10.00 MVA	Rated Apparent Power of Transf. Side 5
353	STARPNT SIDE 5	Earthed Isolated	Earthed	Starpoint of Side 5 is
354	CONNECTION S5	Y D Z	Y	Transf. Winding Connection Side 5
355	VECTOR GRP S5	0 1 2 3 4 5 6 7 8 9 10 11	0	Vector Group Numeral of Side 5
361	UN GEN/MOTOR	0.4 .. 800.0 kV	21.0 kV	Rated Primary Voltage Generator/Motor
362	SN GEN/MOTOR	0.20 .. 5000.00 MVA	70.00 MVA	Rated Apparent Power of the Generator
370	UN BUSBAR	0.4 .. 800.0 kV	110.0 kV	Rated Primary Voltage Busbar
371	I PRIMARY OP.	1 .. 100000 A	200 A	Primary Operating Current of Busbar
372	I PRIMARY OP S1	1 .. 100000 A	200 A	Primary Operating Current Side 1
373	I PRIMARY OP S2	1 .. 100000 A	200 A	Primary Operating Current Side 2
374	I PRIMARY OP S3	1 .. 100000 A	200 A	Primary Operating Current Side 3
375	I PRIMARY OP S4	1 .. 100000 A	200 A	Primary Operating Current Side 4
376	I PRIMARY OP S5	1 .. 100000 A	200 A	Primary Operating Current Side 5
381	I PRIMARY OP 1	1 .. 100000 A	200 A	Primary Operating Current End 1
382	I PRIMARY OP 2	1 .. 100000 A	200 A	Primary Operating Current End 2
383	I PRIMARY OP 3	1 .. 100000 A	200 A	Primary Operating Current End 3
384	I PRIMARY OP 4	1 .. 100000 A	200 A	Primary Operating Current End 4
385	I PRIMARY OP 5	1 .. 100000 A	200 A	Primary Operating Current End 5
386	I PRIMARY OP 6	1 .. 100000 A	200 A	Primary Operating Current End 6
387	I PRIMARY OP 7	1 .. 100000 A	200 A	Primary Operating Current End 7
388	I PRIMARY OP 8	1 .. 100000 A	200 A	Primary Operating Current End 8
389	I PRIMARY OP 9	1 .. 100000 A	200 A	Primary Operating Current End 9
390	I PRIMARY OP 10	1 .. 100000 A	200 A	Primary Operating Current End 10
391	I PRIMARY OP 11	1 .. 100000 A	200 A	Primary Operating Current End 11
392	I PRIMARY OP 12	1 .. 100000 A	200 A	Primary Operating Current End 12

Addr.	Parameter	Setting Options	Default Setting	Comments
396	PHASE SELECTION	Phase 1 Phase 2 Phase 3	Phase 1	Phase selection
403	I PRIMARY OP M3	1 .. 100000 A	200 A	Primary Operating Current Meas. Loc. 3
404	I PRIMARY OP M4	1 .. 100000 A	200 A	Primary Operating Current Meas. Loc. 4
405	I PRIMARY OP M5	1 .. 100000 A	200 A	Primary Operating Current Meas. Loc. 5
408	UN-PRI M3	0.4 .. 800.0 kV	110.0 kV	Rated Primary Voltage Measuring Loc. 3
409	UN-PRI U4	0.4 .. 800.0 kV	110.0 kV	Rated Primary Voltage U4
413	REF PROT. AT	Side 1 Side 2 Side 3 Side 4 Side 5 auto-connected n.assigMeasLoc3 n.assigMeasLoc4 n.assigMeasLoc5	Side 1	Restricted earth fault prot. assigned to
414	REF PROT. 2 AT	Side 1 Side 2 Side 3 Side 4 Side 5 auto-connected n.assigMeasLoc3 n.assigMeasLoc4 n.assigMeasLoc5	Side 1	Restricted earth fault prot2 assigned to
420	DMT/IDMT Ph AT	Side 1 Side 2 Side 3 Side 4 Side 5 Measuring loc.1 Measuring loc.2 Measuring loc.3 Measuring loc.4 Measuring loc.5	Side 1	DMT / IDMT Phase assigned to
422	DMT/IDMT 3I0 AT	Side 1 Side 2 Side 3 Side 4 Side 5 Measuring loc.1 Measuring loc.2 Measuring loc.3 Measuring loc.4 Measuring loc.5	Side 1	DMT / IDMT 3I0 assigned to

Addr.	Parameter	Setting Options	Default Setting	Comments
424	DMT/IDMT E AT	no assig. poss. AuxiliaryCT IX1 AuxiliaryCT IX2 AuxiliaryCT IX3 AuxiliaryCT IX4	AuxiliaryCT IX1	DMT / IDMT Earth assigned to
427	DMT 1PHASE AT	no assig. poss. AuxiliaryCT IX1 AuxiliaryCT IX2 AuxiliaryCT IX3 AuxiliaryCT IX4	AuxiliaryCT IX1	DMT 1Phase assigned to
430	DMT/IDMT Ph2 AT	Side 1 Side 2 Side 3 Side 4 Side 5 Measuring loc.1 Measuring loc.2 Measuring loc.3 Measuring loc.4 Measuring loc.5	Side 1	DMT / IDMT Phase 2 assigned to
432	DMT/IDMT Ph3 AT	Side 1 Side 2 Side 3 Side 4 Side 5 Measuring loc.1 Measuring loc.2 Measuring loc.3 Measuring loc.4 Measuring loc.5	Side 1	DMT / IDMT Phase 3 assigned to
434	DMT/IDMT3I0-2AT	Side 1 Side 2 Side 3 Side 4 Side 5 Measuring loc.1 Measuring loc.2 Measuring loc.3 Measuring loc.4 Measuring loc.5	Side 1	DMT / IDMT 3I0 2 assigned to
436	DMT/IDMT3I0-3AT	Side 1 Side 2 Side 3 Side 4 Side 5 Measuring loc.1 Measuring loc.2 Measuring loc.3 Measuring loc.4 Measuring loc.5	Side 1	DMT / IDMT 3I0 3 assigned to
438	DMT/IDMT E2 AT	no assig. poss. AuxiliaryCT IX1 AuxiliaryCT IX2 AuxiliaryCT IX3 AuxiliaryCT IX4	AuxiliaryCT IX1	DMT / IDMT Earth 2 assigned to

Addr.	Parameter	Setting Options	Default Setting	Comments
440	UNBAL. LOAD AT	Side 1 Side 2 Side 3 Side 4 Side 5 Measuring loc.1 Measuring loc.2 Measuring loc.3 Measuring loc.4 Measuring loc.5	Side 1	Unbalance Load (Neg. Seq.) assigned to
442	THERM. O/L AT	Side 1 Side 2 Side 3 Side 4 Side 5	Side 1	Thermal Overload Protection assigned to
444	THERM. O/L 2 AT	Side 1 Side 2 Side 3 Side 4 Side 5	Side 1	Thermal Overload Protection2 assigned to
470	BREAKER FAIL.AT	Side 1 Side 2 Side 3 Side 4 Side 5 Measuring loc.1 Measuring loc.2 Measuring loc.3 Measuring loc.4 Measuring loc.5 Ext. switchg. 1	Side 1	Breaker Failure Protection assigned to
471	BREAKER FAIL2AT	Side 1 Side 2 Side 3 Side 4 Side 5 Measuring loc.1 Measuring loc.2 Measuring loc.3 Measuring loc.4 Measuring loc.5 Ext. switchg. 1	Side 1	Breaker Failure Protection 2 assigned to
511	STRPNT->OBJ M1	YES NO	YES	CT-Strpnt. Meas. Loc.1 in Dir. of Object
512	IN-PRI CT M1	1 .. 100000 A	200 A	CT Rated Primary Current Meas. Loc. 1
513	IN-SEC CT M1	1A 5A	1A	CT Rated Secondary Current Meas. Loc. 1
521	STRPNT->OBJ M2	YES NO	YES	CT-Strpnt. Meas. Loc.2 in Dir. of Object
522	IN-PRI CT M2	1 .. 100000 A	2000 A	CT Rated Primary Current Meas. Loc. 2

Addr.	Parameter	Setting Options	Default Setting	Comments
523	IN-SEC CT M2	1A 5A	1A	CT Rated Secondary Current Meas. Loc. 2
531	STRPNT->OBJ M3	YES NO	YES	CT-Strpnt. Meas. Loc.3 in Dir. of Object
532	IN-PRI CT M3	1 .. 100000 A	2000 A	CT Rated Primary Current Meas. Loc. 3
533	IN-SEC CT M3	1A 5A	1A	CT Rated Secondary Current Meas. Loc. 3
541	STRPNT->OBJ M4	YES NO	YES	CT-Strpnt. Meas. Loc.4 in Dir. of Object
542	IN-PRI CT M4	1 .. 100000 A	2000 A	CT Rated Primary Current Meas. Loc. 4
543	IN-SEC CT M4	1A 5A	1A	CT Rated Secondary Current Meas. Loc. 4
551	STRPNT->OBJ M5	YES NO	YES	CT-Strpnt. Meas. Loc.5 in Dir. of Object
552	IN-PRI CT M5	1 .. 100000 A	2000 A	CT Rated Primary Current Meas. Loc. 5
553	IN-SEC CT M5	1A 5A	1A	CT Rated Secondary Current Meas. Loc. 5
561	STRPNT->BUS I1	YES NO	YES	CT-Starpoint I1 in Direction of Busbar
562	IN-PRI CT I1	1 .. 100000 A	200 A	CT Rated Primary Current I1
563	IN-SEC CT I1	1A 5A 0.1A	1A	CT Rated Secondary Current I1
571	STRPNT->BUS I2	YES NO	YES	CT-Starpoint I2 in Direction of Busbar
572	IN-PRI CT I2	1 .. 100000 A	200 A	CT Rated Primary Current I2
573	IN-SEC CT I2	1A 5A 0.1A	1A	CT Rated Secondary Current I2
581	STRPNT->BUS I3	YES NO	YES	CT-Starpoint I3 in Direction of Busbar
582	IN-PRI CT I3	1 .. 100000 A	200 A	CT Rated Primary Current I3
583	IN-SEC CT I3	1A 5A 0.1A	1A	CT Rated Secondary Current I3
591	STRPNT->BUS I4	YES NO	YES	CT-Starpoint I4 in Direction of Busbar
592	IN-PRI CT I4	1 .. 100000 A	200 A	CT Rated Primary Current I4
593	IN-SEC CT I4	1A 5A 0.1A	1A	CT Rated Secondary Current I4
601	STRPNT->BUS I5	YES NO	YES	CT-Starpoint I5 in Direction of Busbar

Addr.	Parameter	Setting Options	Default Setting	Comments
602	IN-PRI CT I5	1 .. 100000 A	200 A	CT Rated Primary Current I5
603	IN-SEC CT I5	1A 5A 0.1A	1A	CT Rated Secondary Current I5
611	STRPNT->BUS I6	YES NO	YES	CT-Starpoint I6 in Direction of Busbar
612	IN-PRI CT I6	1 .. 100000 A	200 A	CT Rated Primary Current I6
613	IN-SEC CT I6	1A 5A 0.1A	1A	CT Rated Secondary Current I6
621	STRPNT->BUS I7	YES NO	YES	CT-Starpoint I7 in Direction of Busbar
622	IN-PRI CT I7	1 .. 100000 A	200 A	CT Rated Primary Current I7
623	IN-SEC CT I7	1A 5A 0.1A	1A	CT Rated Secondary Current I7
631	STRPNT->BUS I8	YES NO	YES	CT-Starpoint I8 in Direction of Busbar
632	IN-PRI CT I8	1 .. 100000 A	200 A	CT Rated Primary Current I8
633	IN-SEC CT I8	1A 5A 0.1A	1A	CT Rated Secondary Current I8
641	STRPNT->BUS I9	YES NO	YES	CT-Starpoint I9 in Direction of Busbar
642	IN-PRI CT I9	1 .. 100000 A	200 A	CT Rated Primary Current I9
643	IN-SEC CT I9	1A 5A 0.1A	1A	CT Rated Secondary Current I9
651	STRPNT->BUS I10	YES NO	YES	CT-Starpoint I10 in Direction of Busbar
652	IN-PRI CT I10	1 .. 100000 A	200 A	CT Rated Primary Current I10
653	IN-SEC CT I10	1A 5A 0.1A	1A	CT Rated Secondary Current I10
661	STRPNT->BUS I11	YES NO	YES	CT-Starpoint I11 in Direction of Busbar
662	IN-PRI CT I11	1 .. 100000 A	200 A	CT Rated Primary Current I11
663	IN-SEC CT I11	1A 5A 0.1A	1A	CT Rated Secondary Current I11
671	STRPNT->BUS I12	YES NO	YES	CT-Starpoint I12 in Direction of Busbar
672	IN-PRI CT I12	1 .. 100000 A	200 A	CT Rated Primary Current I12
673	IN-SEC CT I12	1A 5A 0.1A	1A	CT Rated Secondary Current I12

Addr.	Parameter	Setting Options	Default Setting	Comments
711	EARTH IX1 AT	Terminal Q7 Terminal Q8	Terminal Q7	Earthing electrod IX1 connected to
712	IN-PRI CT IX1	1 .. 100000 A	200 A	CT rated primary current IX1
713	IN-SEC CT IX1	1A 5A	1A	CT rated secondary current IX1
721	EARTH IX2 AT	Terminal N7 Terminal N8	Terminal N7	Earthing electrod IX2 connected to
722	IN-PRI CT IX2	1 .. 100000 A	200 A	CT rated primary current IX2
723	IN-SEC CT IX2	1A 5A	1A	CT rated secondary current IX2
731	EARTH IX3 AT	Terminal R7 Terminal R8	Terminal R7	Earthing electrod IX3 connected to
732	IN-PRI CT IX3	1 .. 100000 A	200 A	CT rated primary current IX3
733	IN-SEC CT IX3	1A 5A	1A	CT rated secondary current IX3
734	FACTOR CT IX3	1.0 .. 300.0	60.0	Factor: prim. over sek. current IX3
741	EARTH IX4 AT	Terminal P7 Terminal P8	Terminal P7	Earthing electrod IX4 connected to
742	IN-PRI CT IX4	1 .. 100000 A	200 A	CT rated primary current IX4
743	IN-SEC CT IX4	1A 5A	1A	CT rated secondary current IX4
744	FACTOR CT IX4	1.0 .. 300.0	60.0	Factor: prim. over sek. current IX4
801	UN-PRI VT SET	1.0 .. 1200.0 kV	110.0 kV	VT Rated Prim. Voltage Set UL1, UL2, UL3
802	UN-SEC VT SET	80 .. 125 V	100 V	VT Rated Sec. Voltage Set UL1, UL2, UL3
803	CORRECT. U Ang	-5.00 .. 5.00 °	0.00 °	Angle correction UL1, UL2, UL3 - VT
811	UN-PRI VT U4	1.0 .. 1200.0 kV	110.0 kV	VT Rated Primary Voltage U4
812	UN-SEC VT U4	80 .. 125 V	100 V	VT Rated Secondary Voltage U4
816	Uph / Udelta	0.10 .. 9.99	1.73	Matching ratio Phase-VT to Open-Delta-VT
817	Uph(U4)/Udelta	0.10 .. 9.99	1.73	Matching ratio Ph-VT(U4) to Open-DeltaVT
831	SwitchgCBaux S1	(Setting options depend on configuration)	Q0	Switchgear / CBaux at Side 1
832	SwitchgCBaux S2	(Setting options depend on configuration)	None	Switchgear / CBaux at Side 2
833	SwitchgCBaux S3	(Setting options depend on configuration)	None	Switchgear / CBaux at Side 3
834	SwitchgCBaux S4	(Setting options depend on configuration)	None	Switchgear / CBaux at Side 4
835	SwitchgCBaux S5	(Setting options depend on configuration)	None	Switchgear / CBaux at Side 5

Addr.	Parameter	Setting Options	Default Setting	Comments
836	SwitchgCBaux M1	(Setting options depend on configuration)	None	Switchgear / CBaux at Measuring Loc. M1
837	SwitchgCBaux M2	(Setting options depend on configuration)	None	Switchgear / CBaux at Measuring Loc. M2
838	SwitchgCBaux M3	(Setting options depend on configuration)	None	Switchgear / CBaux at Measuring Loc. M3
839	SwitchgCBaux M4	(Setting options depend on configuration)	None	Switchgear / CBaux at Measuring Loc. M4
840	SwitchgCBaux M5	(Setting options depend on configuration)	None	Switchgear / CBaux at Measuring Loc. M5
841	SwitchgCBaux E1	(Setting options depend on configuration)	None	Switchgear / CBaux at ext. location 1
851A	TMin TRIP CMD	0.01 .. 32.00 sec	0.15 sec	Minimum TRIP Command Duration

2.1.4.6 Information List

No.	Information	Type of Information	Comments
5145	>Reverse Rot.	SP	>Reverse Phase Rotation
5147	Rotation L1L2L3	OUT	Phase Rotation L1L2L3
5148	Rotation L1L3L2	OUT	Phase Rotation L1L3L2

2.1.5 Setting Groups

Four independent groups of parameters can be set for the device functions. During operation, you may switch between setting groups locally, via binary inputs (if so configured), via the operator or service interface using a personal computer, or via the system interface.

2.1.5.1 Setting Groups

Purpose of Setting Groups

A setting group includes the setting values for all functions that have been selected as ***Enabled*** during configuration of the functional scope. In the 7UT613/63x device, four independent setting groups (***Group A*** to ***Group D***) are available. Whereas setting values and options may vary, the selected scope of functions is the same for all groups.

Setting groups enable the user to save the corresponding settings for each application. Settings may be loaded quickly. While all setting groups are stored in the relay, only one setting group may be active at a given time. If multiple setting groups are not required, Group ***Group A*** is the default selection.

If the changeover option is desired, group changeover must be set to **Grp Chge OPTION** = ***Enabled*** during configuration of the functional scope (address 103). For the setting of the function parameters, each of the required 4 setting groups ***Group A*** to ***Group D*** must be configured.

More details on how to navigate between the setting groups, to copy and reset setting groups, and how to switch over between the setting groups during operation, can be found in the SIPROTEC 4 System Description /1/.

The preconditions for switching from one setting group to another via binary inputs is described in the Subsection „Mounting and Commissioning“.

2.1.5.2 Setting Notes

CHANGE Activates the setting group switching (address 302), only possible, if the setting group switching feature in the function selection has been set to **Enabled**.

2.1.5.3 Settings

Addr.	Parameter	Setting Options	Default Setting	Comments
302	CHANGE	Group A Group B Group C Group D Binary Input Protocol	Group A	Change to Another Setting Group

2.1.5.4 Information List

No.	Information	Type of Information	Comments
-	Group A	IntSP	Group A
-	Group B	IntSP	Group B
-	Group C	IntSP	Group C
-	Group D	IntSP	Group D
7	>Set Group Bit0	SP	>Setting Group Select Bit 0
8	>Set Group Bit1	SP	>Setting Group Select Bit 1

2.1.6 Power System Data 2

The general protection data (**P.System Data 2**) include settings associated with all functions rather than a specific protection, monitoring or control function. In contrast to the **P.System Data 1** as discussed before, they can be changed over with the setting groups and set on the operator panel of the device. Only a subset of the information contained in the information list can appear, depending on the version and the selected protected object.

2.1.6.1 Setting Notes

Sign of Power For all protective and additional functions, in which the polarity of the measured values plays a role, the definition of signs is important. As a matter of principle, currents and power are defined positive when flowing into the protected object. The consistency of

the polarity of currents thus needs to be ensured by means of the polarity settings set out in the section General System Data.

Apart from currents and voltages, protection and additional functions use the same definition of current direction as a matter of principle. This applies to 7UT613/63x thus also to reverse power protection, forward power monitoring, operational measured values for power and work, and, if required, user-defined flexible protection functions. When the device is delivered from the factory, its power and operating values are defined in such manner that power in the direction of the protected object is considered positive: Active components and inductive reactive components in the direction of the protected object are positive. The same applies to the power factor cos φ

It is occasionally desired to define the power draw of the protected object (e.g. as seen from the busbar) as positive. The signs for these components can be inverted by using parameter address 1107 **P,Q sign**.

Please ensure that the definition of signs conforms with the direction of the reverse power protection and the forward power monitoring when using these power functions. In case of a generator in accordance with figure “Power Measurement on a Generator” (in section "Topology of the Protected Object", margin heading "Assignment of Voltage Measuring Inputs") where the voltage measuring location **U** is assigned to the current measuring location **M1**, the default setting ***not reversed*** is not inverted, because the in-flowing current into the generator from the starpoint at **M1** together with the measured voltage at **U** results in positive power. However, if the voltage at **U** is assigned to the current measuring location **M2**, **P,Q sign** = ***reversed*** must be set, because the current flowing out of the generator with**U** is supposed to be positive power.

Circuit Breaker Status

In order to function optimally, several protection and supplementary functions require information regarding the state of the circuit breaker. Command processing makes also use of the feedback information from the switching devices.

If, for instance, the circuit breaker failure protection is used to monitor the reaction of a specific circuit breaker by evaluating the current flow, the protection device must know the measuring location at which the current through the breaker is acquired.

In addition to such circuit breaker information, as may be available from the feedback indications provided by the circuit breaker auxiliary contacts, the device evaluates the electrical criteria that determine that a circuit breaker cannot be open if a current is flowing through it. This current criterion is defined by a pre-determined current value **I-REST**, below which an open breaker is detected.

As the topologies encountered in a system can be quite complex, the circuit breaker can be assigned to a measuring location or to a side.

In 3-phase protected objects a residual current for each of the up to 5 possible sides of the main protected object can be set and for each of the up to 5 possible measuring locations. In this device, the options are of course restricted to the sides and measuring locations that actually exist and have been specified by the topology. The maximum range of possible addresses includes:

Address 1111	PoleOpenCurr.S1 for side 1 of the main protected object,
Address 1112	PoleOpenCurr.S2 for side 2 of the main protected object,
Address 1113	PoleOpenCurr.S3 for side 3 of the main protected object,
Address 1114	PoleOpenCurr.S4 for side 4 of the main protected object,
Address 1115	PoleOpenCurr.S5 for side 5 of the main protected object.

Address 1121	PoleOpenCurr.M1 for measuring location 1,
Address 1122	PoleOpenCurr.M2 for measuring location 2,
Address 1123	PoleOpenCurr.M3 for measuring location 3,
Address 1124	PoleOpenCurr.M4 for measuring location 4,
Address 1125	PoleOpenCurr.M5 for measuring location 5.

If parasitic currents (e.g. through induction) can be excluded when the circuit breaker is open, these settings may normally be very sensitive. Otherwise the settings must be increased correspondingly. In most cases the setting can be the same for all addresses displayed.

However, please note that current summation measuring errors may occur on the sides which are fed by multiple measuring locations.

In the 1-phase busbar protection, you can set such an open-pole current for each of the up to 9 feeders (7UT613 and 7UT633 for 1-phase connection with or without summation CT) or 12 feeders (7UT635 with or without summation CT) of the busbar. The maximum range of possible addresses includes:

Address 1131	PoleOpenCurr I1 for feeder 1,
Address 1132	PoleOpenCurr I2 for feeder 2,
Address 1133	PoleOpenCurr I3 for feeder 3,
Address 1134	PoleOpenCurr I4 for feeder 4,
Address 1135	PoleOpenCurr I5 for feeder 5,
Address 1136	PoleOpenCurr I6 for feeder 6,
Address 1137	PoleOpenCurr I7 for feeder 7,
Address 1138	PoleOpenCurr I8 for feeder 8,
Address 1139	PoleOpenCurr I9 for feeder 9,
Address 1140	PoleOpenCurrI10 for feeder 10,
Address 1141	PoleOpenCurrI11 for feeder 11,
Address 1142	PoleOpenCurrI12 for feeder 12.

Finally, it is also possible to monitor the residual currents at the auxiliary measuring locations. These residual currents are needed by the dynamic cold-load pickup feature of the earth overcurrent protection, if no side or measuring location is assigned to the earth overcurrent protection. The maximum range of possible addresses includes:

Address 1151	PoleOpenCurrIX1 for further measuring location 1,
Address 1152	PoleOpenCurrIX2 for further measuring location 2,
Address 1153	PoleOpenCurrIX3 for further measuring location 3,
Address 1154	PoleOpenCurrIX4 for further measuring location 4.

Please remember to also allocate all binary inputs that are needed to generate a manual close pulse for the various protection functions (FNos 30351 to 30360).



Note

In the following settings overview, the values are referred to the rated current of the assigned side (I/I_{NS}).

2.1.6.2 Settings

The table indicates region-specific presettings. Column C (configuration) indicates the corresponding secondary nominal current of the current transformer.

Addr.	Parameter	C	Setting Options	Default Setting	Comments
1107	P,Q sign		not reversed reversed	not reversed	sign of P,Q
1111	PoleOpenCurr.S1		0.04 .. 1.00 I/InS	0.10 I/InS	Pole Open Current Threshold Side 1
1112	PoleOpenCurr.S2		0.04 .. 1.00 I/InS	0.10 I/InS	Pole Open Current Threshold Side 2
1113	PoleOpenCurr.S3		0.04 .. 1.00 I/InS	0.16 I/InS	Pole Open Current Threshold Side 3
1114	PoleOpenCurr.S4		0.04 .. 1.00 I/InS	0.16 I/InS	Pole Open Current Threshold Side 4
1115	PoleOpenCurr.S5		0.04 .. 1.00 I/InS	0.16 I/InS	Pole Open Current Threshold Side 5
1121	PoleOpenCurr.M1	1A	0.04 .. 1.00 A	0.04 A	Pole Open Current Threshold Meas.Loc. M1
		5A	0.20 .. 5.00 A	0.20 A	
1122	PoleOpenCurr.M2	1A	0.04 .. 1.00 A	0.04 A	Pole Open Current Threshold Meas.Loc. M2
		5A	0.20 .. 5.00 A	0.20 A	
1123	PoleOpenCurr.M3	1A	0.04 .. 1.00 A	0.04 A	Pole Open Current Threshold Meas.Loc. M3
		5A	0.20 .. 5.00 A	0.20 A	
1124	PoleOpenCurr.M4	1A	0.04 .. 1.00 A	0.04 A	Pole Open Current Threshold Meas.Loc. M4
		5A	0.20 .. 5.00 A	0.20 A	
1125	PoleOpenCurr.M5	1A	0.04 .. 1.00 A	0.04 A	Pole Open Current Threshold Meas.Loc. M5
		5A	0.20 .. 5.00 A	0.20 A	
1131	PoleOpenCurr I1	1A	0.04 .. 1.00 A	0.04 A	Pole Open Current Threshold End 1
		5A	0.20 .. 5.00 A	0.20 A	
		0.1A	0.004 .. 0.100 A	0.004 A	
1132	PoleOpenCurr I2	1A	0.04 .. 1.00 A	0.04 A	Pole Open Current Threshold End 2
		5A	0.20 .. 5.00 A	0.20 A	
		0.1A	0.004 .. 0.100 A	0.004 A	
1133	PoleOpenCurr I3	1A	0.04 .. 1.00 A	0.04 A	Pole Open Current Threshold End 3
		5A	0.20 .. 5.00 A	0.20 A	
		0.1A	0.004 .. 0.100 A	0.004 A	
1134	PoleOpenCurr I4	1A	0.04 .. 1.00 A	0.04 A	Pole Open Current Threshold End 4
		5A	0.20 .. 5.00 A	0.20 A	
		0.1A	0.004 .. 0.100 A	0.004 A	
1135	PoleOpenCurr I5	1A	0.04 .. 1.00 A	0.04 A	Pole Open Current Threshold End 5
		5A	0.20 .. 5.00 A	0.20 A	
		0.1A	0.004 .. 0.100 A	0.004 A	

Addr.	Parameter	C	Setting Options	Default Setting	Comments
1136	PoleOpenCurr I6	1A	0.04 .. 1.00 A	0.04 A	Pole Open Current Threshold End 6
		5A	0.20 .. 5.00 A	0.20 A	
		0.1A	0.004 .. 0.100 A	0.004 A	
1137	PoleOpenCurr I7	1A	0.04 .. 1.00 A	0.04 A	Pole Open Current Threshold End 7
		5A	0.20 .. 5.00 A	0.20 A	
		0.1A	0.004 .. 0.100 A	0.004 A	
1138	PoleOpenCurr I8	1A	0.04 .. 1.00 A	0.04 A	Pole Open Current Threshold End 8
		5A	0.20 .. 5.00 A	0.20 A	
		0.1A	0.004 .. 0.100 A	0.004 A	
1139	PoleOpenCurr I9	1A	0.04 .. 1.00 A	0.04 A	Pole Open Current Threshold End 9
		5A	0.20 .. 5.00 A	0.20 A	
		0.1A	0.004 .. 0.100 A	0.004 A	
1140	PoleOpenCurrI10	1A	0.04 .. 1.00 A	0.04 A	Pole Open Current Threshold End 10
		5A	0.20 .. 5.00 A	0.20 A	
		0.1A	0.004 .. 0.100 A	0.004 A	
1141	PoleOpenCurrI11	1A	0.04 .. 1.00 A	0.04 A	Pole Open Current Threshold End 11
		5A	0.20 .. 5.00 A	0.20 A	
		0.1A	0.004 .. 0.100 A	0.004 A	
1142	PoleOpenCurrI12	1A	0.04 .. 1.00 A	0.04 A	Pole Open Current Threshold End 12
		5A	0.20 .. 5.00 A	0.20 A	
		0.1A	0.004 .. 0.100 A	0.004 A	
1151	PoleOpenCurrIX1	1A	0.04 .. 1.00 A	0.04 A	Pole Open Current Threshold AuxiliaryCT1
		5A	0.20 .. 5.00 A	0.20 A	
1152	PoleOpenCurrIX2	1A	0.04 .. 1.00 A	0.04 A	Pole Open Current Threshold AuxiliaryCT2
		5A	0.20 .. 5.00 A	0.20 A	
1153	PoleOpenCurrIX3	1A	0.04 .. 1.00 A	0.04 A	Pole Open Current Threshold AuxiliaryCT3
		5A	0.20 .. 5.00 A	0.20 A	
1154	PoleOpenCurrIX4	1A	0.04 .. 1.00 A	0.04 A	Pole Open Current Threshold AuxiliaryCT4
		5A	0.20 .. 5.00 A	0.20 A	

2.1.6.3 Information List

No.	Information	Type of Information	Comments
-	>QuitG-TRP	IntSP	>Quitt Lock Out: General Trip
-	G-TRP Quit	IntSP	Lock Out: General TRIP
126	ProtON/OFF	IntSP	Protection ON/OFF (via system port)
236.2127	BLK. Flex.Fct.	IntSP	BLOCK Flexible Function
301	Pow.Sys.Flt.	OUT	Power System fault
302	Fault Event	OUT	Fault Event

No.	Information	Type of Information	Comments
311	FaultConfig/Set	OUT	Fault in configuration / setting
312	GenErrGroupConn	OUT	Gen.err.: Inconsistency group/connection
313	GenErrEarthCT	OUT	Gen.err.: Sev. earth-CTs with equal typ
314	GenErrSidesMeas	OUT	Gen.err.: Number of sides / measurements
501	Relay PICKUP	OUT	Relay PICKUP
511	Relay TRIP	OUT	Relay GENERAL TRIP command
545	PU Time	VI	Time from Pickup to drop out
546	TRIP Time	VI	Time from Pickup to TRIP
576	IL1S1:	VI	Primary fault current IL1 side1
577	IL2S1:	VI	Primary fault current IL2 side1
578	IL3S1:	VI	Primary fault current IL3 side1
579	IL1S2:	VI	Primary fault current IL1 side2
580	IL2S2:	VI	Primary fault current IL2 side2
581	IL3S2:	VI	Primary fault current IL3 side2
582	I1:	VI	Primary fault current I1
583	I2:	VI	Primary fault current I2
584	I3:	VI	Primary fault current I3
585	I4:	VI	Primary fault current I4
586	I5:	VI	Primary fault current I5
587	I6:	VI	Primary fault current I6
588	I7:	VI	Primary fault current I7
30060	Gen CT-M1:	VI	General: Adaption factor CT M1
30061	Gen CT-M2:	VI	General: Adaption factor CT M2
30062	Gen CT-M3:	VI	General: Adaption factor CT M3
30063	Gen CT-M4:	VI	General: Adaption factor CT M4
30064	Gen CT-M5:	VI	General: Adaption factor CT M5
30065	Gen VT-U1:	VI	General: Adaption factor VT UL123
30067	par too low:	VI	parameter too low:
30068	par too high:	VI	parameter too high:
30069	settingFault:	VI	setting fault:
30070	Man.Clos.Det.M1	OUT	Manual close signal meas.loc. 1 detected
30071	Man.Clos.Det.M2	OUT	Manual close signal meas.loc. 2 detected
30072	Man.Clos.Det.M3	OUT	Manual close signal meas.loc. 3 detected
30073	Man.Clos.Det.M4	OUT	Manual close signal meas.loc. 4 detected
30074	Man.Clos.Det.M5	OUT	Manual close signal meas.loc. 5 detected
30075	Man.Clos.Det.S1	OUT	Manual close signal side 1 is detected
30076	Man.Clos.Det.S2	OUT	Manual close signal side 2 is detected
30077	Man.Clos.Det.S3	OUT	Manual close signal side 3 is detected
30078	Man.Clos.Det.S4	OUT	Manual close signal side 4 is detected
30079	Man.Clos.Det.S5	OUT	Manual close signal side 5 is detected
30251	IL1M1:	VI	Primary fault current IL1 meas. loc. 1
30252	IL2M1:	VI	Primary fault current IL2 meas. loc. 1
30253	IL3M1:	VI	Primary fault current IL3 meas. loc. 1
30254	IL1M2:	VI	Primary fault current IL1 meas. loc. 2
30255	IL2M2:	VI	Primary fault current IL2 meas. loc. 2
30256	IL3M2:	VI	Primary fault current IL3 meas. loc. 2

No.	Information	Type of Information	Comments
30257	IL1M3:	VI	Primary fault current IL1 meas. loc. 3
30258	IL2M3:	VI	Primary fault current IL2 meas. loc. 3
30259	IL3M3:	VI	Primary fault current IL3 meas. loc. 3
30260	IL1M4:	VI	Primary fault current IL1 meas. loc. 4
30261	IL2M4:	VI	Primary fault current IL2 meas. loc. 4
30262	IL3M4:	VI	Primary fault current IL3 meas. loc. 4
30263	IL1M5:	VI	Primary fault current IL1 meas. loc. 5
30264	IL2M5:	VI	Primary fault current IL2 meas. loc. 5
30265	IL3M5:	VI	Primary fault current IL3 meas. loc. 5
30266	IL1S3:	VI	Primary fault current IL1 side3
30267	IL2S3:	VI	Primary fault current IL2 side3
30268	IL3S3:	VI	Primary fault current IL3 side3
30269	IL1S4:	VI	Primary fault current IL1 side4
30270	IL2S4:	VI	Primary fault current IL2 side4
30271	IL3S4:	VI	Primary fault current IL3 side4
30272	IL1S5:	VI	Primary fault current IL1 side5
30273	IL2S5:	VI	Primary fault current IL2 side5
30274	IL3S5:	VI	Primary fault current IL3 side5
30275	I8:	VI	Primary fault current I8
30276	I9:	VI	Primary fault current I9
30277	I10:	VI	Primary fault current I10
30278	I11:	VI	Primary fault current I11
30279	I12:	VI	Primary fault current I12
30351	>ManualClose M1	SP	>Manual close signal measurement loc. 1
30352	>ManualClose M2	SP	>Manual close signal measurement loc. 2
30353	>ManualClose M3	SP	>Manual close signal measurement loc. 3
30354	>ManualClose M4	SP	>Manual close signal measurement loc. 4
30355	>ManualClose M5	SP	>Manual close signal measurement loc. 5
30356	>ManualClose S1	SP	>Manual close signal side 1
30357	>ManualClose S2	SP	>Manual close signal side 2
30358	>ManualClose S3	SP	>Manual close signal side 3
30359	>ManualClose S4	SP	>Manual close signal side 4
30360	>ManualClose S5	SP	>Manual close signal side 5

2.2 Differential Protection

The differential protection represents the main protection feature of the device. It is based on current comparison under consideration of the transformation ratio of the transformer.7UT613/63x is suitable for unit protection of transformers, generators, motors, reactors, short lines, and (under observance of the available number of analogue current inputs) and (under observance of the available number of analogue current inputs) busbars. Protection of generator/transformer units, transformer/winding combinations or transformer/starpoint former, can also be realised. 7UT613 and 7UT633 allow up to 3, 7UT635 allows up to 5 three-phase measuring locations.

7UT613/63x can also be used as a single-phase device. In this case, 7UT613 and 7UT633 allow up to 9, 7UT635 allows up to 12 measuring locations, e.g. currents from a busbar with up to 9 or 12 feeders.

The protected zone is selectively limited by the CTs at its ends.

2.2.1 Functional Description of the Differential Protection

Processing of the measured values depends on the way the differential protection is used. This section discusses first the differential protection function in general, regardless of the type of protected object. A single-phase system is referred to. Particulars with regard to the individual protected objects follow thereafter.

Basic Principle with Two Sides

Differential protection is based on current comparison. It makes use of the fact that a protected object carries always the same current i (dashed line in 2-17 below) at its two sides in healthy operation. This current flows into one side of the considered zone and leaves it again on the other side. A difference in currents is a clear indication of a fault within this section. If the actual current transformation ratio is the same, the secondary windings of the current transformers **CT1** and **CT2** at the sides of the protected object can be connected to form a closed electric circuit with a secondary current $\underline{\mathbf{I}}$; a measuring element **M**, which is connected to the electrical balance point, remains at zero current in healthy operation.

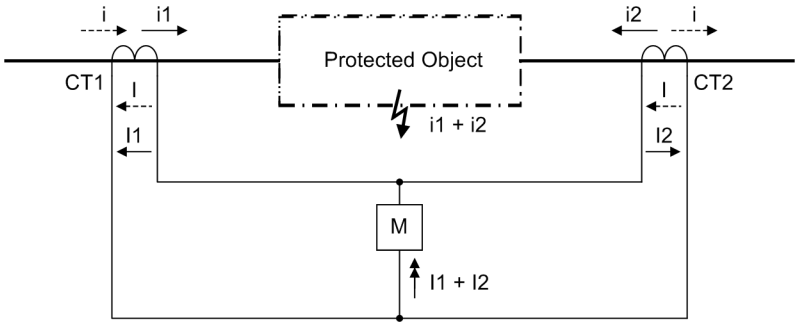

Figure 2-17 Basic principle of differential protection for two sides (single-phase illustration)

When a fault occurs in the zone limited by the transformers, a current $i_1 + i_2$, which is proportional to the fault currents $\underline{I}_1 + \underline{I}_2$ flowing in from both sides is fed to the measuring element. As a result, the simple circuit shown in Figure 2-17 ensures a reliable tripping of the protection if the fault current flowing into the protected zone during a fault is high enough for the measuring element **M** to respond.

All following considerations are based on the convention that all currents flowing into the protected zone are defined as positive unless explicitly stated otherwise.

Basic Principle with more than Two Sides

For protected objects with three or more sides or for busbars, the differential principle is expanded in that the total of all currents flowing into the protected object is zero in healthy operation, whereas in case of a fault the total in-flowing current is equal to the fault current.

See figure 2-18 as an example for four feeders. The three-winding transformer in figure 2-19 has 4 measuring locations, so it is treated by the differential protection like a „4-winding“ transformer.

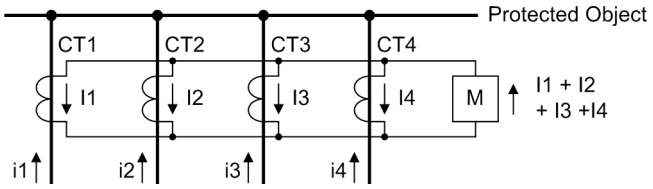

Figure 2-18 Basic principle of differential protection for four ends (single-phase illustration)

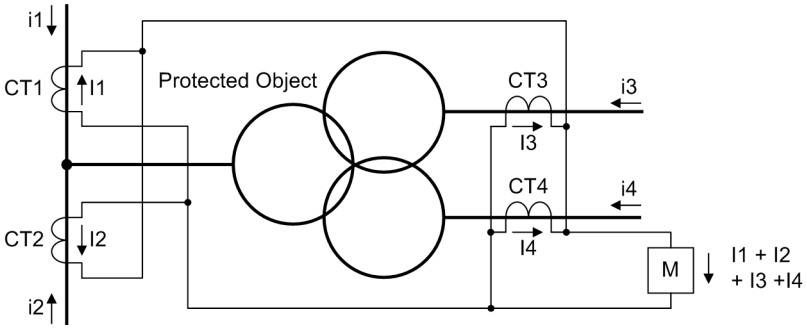

Figure 2-19 Basic principle of differential protection for 4 measuring locations — example of a three-winding power transformer with 4 measuring locations (single-phase illustration)

Current Restraint

When an external fault causes a heavy current to flow through the protected zone, differences in the magnetic characteristics of the current transformers **CT1** and **CT2** (figure 2-17) under conditions of saturation may cause a significant current flow through the measuring element **M**. If it is greater than the respective pickup threshold, the device can trip even though no fault occurred in the protected zone. Current restraint (stabilisation) prevents such erroneous operation.

In differential protection systems for protected objects with two terminals, a restraining quantity is normally derived from the current difference $|\underline{I}_1 - \underline{I}_2|$ or from the arithmetical sum $|\underline{I}_1| + |\underline{I}_2|$. Both methods are equal in the relevant ranges of the stabilisation characteristics. For protected objects with more than two ends, such as multi-winding transformers, busbars etc, only the arithmetical sum method is possible. The latter method is used in 7UT613/63x for all protected objects. The following definitions apply for 2 measuring points:

a tripping or differential current

$$I_{diff} = |\underline{I}_1 + \underline{I}_2|$$

and the stabilisation or restraining current

$I_{stab} = |\underline{I}_1| + |\underline{I}_2|$

The current sum definition is extended for more than 2 measurement locations, e.g. for 4 measuring locations (figure 2-18 or 2-19), therefore:

$I_{diff} = |\underline{I}_1 + \underline{I}_2 + \underline{I}_3 + \underline{I}_4|$

$I_{stab} = |\underline{I}_1| + |\underline{I}_2| + |\underline{I}_3| + |\underline{I}_4|$

I_{diff} is derived from the fundamental frequency current and produces the tripping effect quantity, I_{stab} counteracts this effect.

To clarify the situation, three important operating conditions with ideal and matched measurement quantities are considered.

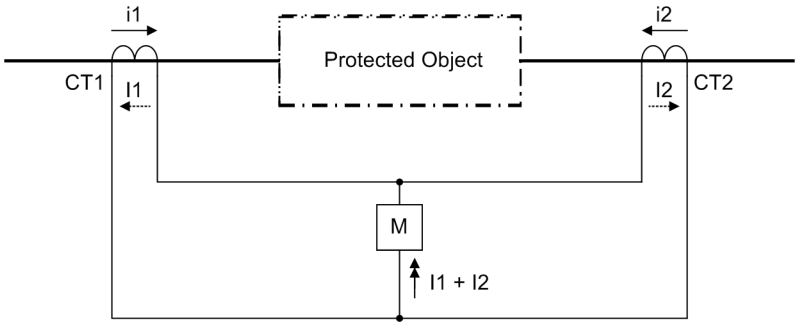

Figure 2-20 Definition of current direction

1. Through-flowing current under undisturbed conditions or external fault:

   $\underline{I}_1$ flows into the protected zone, $\underline{I}_2$ leaves the protected zone, i.e. is negative according tot he definition of signs, therefore $\underline{I}_2 = -\underline{I}_1$;

   moreover $|\underline{I}_2| = |\underline{I}_1|$

   $I_{diff} = |\underline{I}_1 + \underline{I}_2| = |\underline{I}_1 - \underline{I}_1| = 0$

   $I_{stab} = |\underline{I}_1| + |\underline{I}_2| = |\underline{I}_1| + |\underline{I}_1| = 2 \cdot |\underline{I}_1|$

   No tripping effect ($I_{diff} = 0$); the stabilisation (I_{stab}) corresponds to double the through-flowing current.

2. Internal short-circuit, e.g. fed with equal currents each side:

   The following applies $\underline{I}_2 = \underline{I}_1$; moreover $|\underline{I}_2| = |\underline{I}_1|$

   $I_{diff} = |\underline{I}_1 + \underline{I}_2| = |\underline{I}_1 + \underline{I}_1| = 2 \cdot |\underline{I}_1|$

   $I_{stab} = |\underline{I}_1| + |\underline{I}_2| = |\underline{I}_1| + |\underline{I}_1| = 2 \cdot |\underline{I}_1|$

   Tripping effect (I_{diff}) and restraint value (I_{stab}) are equal and correspond to the total fault.

3. Internal short-circuit, fed from one side only:

   The following applies $\underline{I}_2 = 0$

   $I_{diff} = |\underline{I}_1 + \underline{I}_2| = |\underline{I}_1 + 0| = |\underline{I}_1|$

   $I_{stab} = |\underline{I}_1| + |\underline{I}_2| = |\underline{I}_1| + 0 = |\underline{I}_1|$

   Tripping quantity (I_{diff}) and stabilising quantity (I_{stab}) are equal and correspond to the single-sided fault current.

This result shows that for internal fault $I_{diff} = I_{stab}$. Thus, the characteristic of internal faults is a straight line with the slope 1 (45°) in the operation diagram (dash-dotted fault characteristic in figure 2-21).

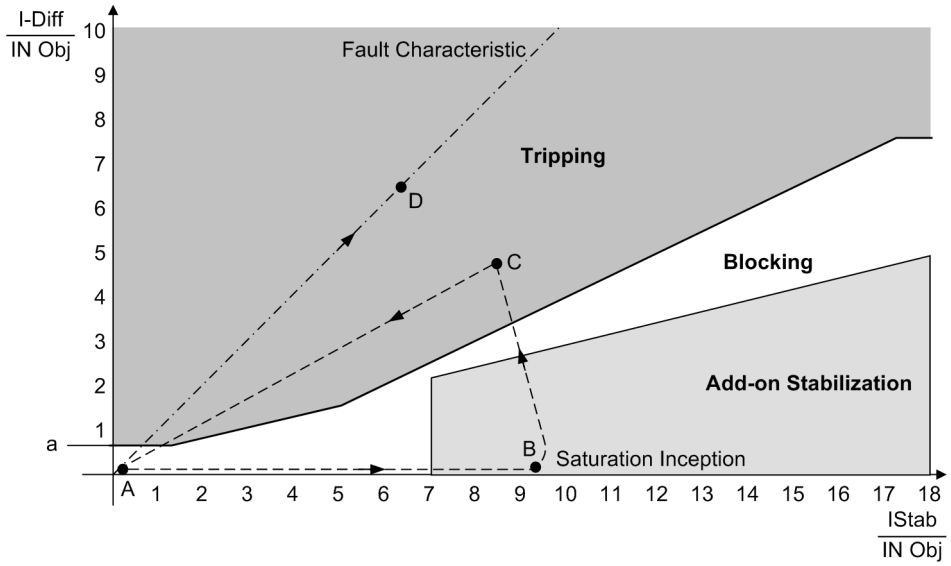

Figure 2-21 Tripping characteristic of the differential protection and fault characteristic

Add-on Restraint during External Faults

Saturation of the current transformers caused by high fault currents and/or long system time constants are uncritical for internal faults (fault in the protected zone), since the measured value deformation is found in the differential current as well in the restraint current, to the same extent. The fault characteristic as illustrated in figure 2-21 also applies in principle in this case. Of course, the fundamental wave of the current must exceed at least the pickup threshold (branch **a**).

During an external fault which produces a high through-flowing fault current causing current transformer saturation, a considerable differential current can be simulated, especially when the degree of saturation is different at the two sides. If the quantities I_{diff}/I_{stab} result in an operating point which lies in the trip area of the operating characteristic, trip signal would be the consequence if there were no special measures.

7UT613/63x provides a saturation indicator which detects such phenomena and initiates add-on restraint (stabilisation) measures. The saturation indicator considers the dynamic behaviour of the differential and restraint quantity.

The dotted line in figure 2-21 shows the instantaneous currents during an external fault with transformer saturation on one side.

Immediately after the fault (**A**), the short-circuit currents rise strongly, causing a correspondingly high restraint current (2 × through-flowing current). At the instant of CT saturation (**B**), a differential quantity is produced and the restraint quantity is reduced. In consequence, the operating point I_{diff}/I_{stab} may move into the tripping area (**C**).

In contrast, the operating point moves immediately along the fault characteristic (**D**) when an internal fault occurs since the restraint (stabilisation) current will barely be higher than the differential current.

Current transformer saturation during external faults is detected by the high initial restraining current which moves the operating point briefly into the add-on restraint area. The saturation indicator makes its decision within the first quarter cycle after fault inception. When an external fault is detected, the differential protection is blocked for a selectable time. This blocking is cancelled as soon as the operation point I_{diff}/I_{stab} is stationary (i.e. throughout at least one cycle) within the tripping zone near the fault characteristic (≥ 80 % of the fault characteristic slope). This allows consequential faults in the protected area to be quickly recognised even after an external fault involving current transformer saturation.

The add-on restraint acts individually per phase. It can be determined by a setting parameter whether only the phase with detected external fault is blocked when this restraint criterion is fulfilled or also the other phases of the differential stage.

A further stabilisation (restraint) comes into effect when differential secondary currents are simulated by different transient behaviour of the current transformer sets. This differential current is caused by different DC time constants in the secondary circuits during through-current conditions, i.e. the equal primary DC components are transformed into unequal secondary DC components due to different time constants of the secondary circuits. This produces a DC component in the differential current which increases the pickup values of the differential stage for a short period.

Identification of DC Components

A further restraint comes into effect when differential secondary currents are simulated by different transient behaviour of the current transformer sets. This differential current is caused by different DC time constants in the secondary circuits during through-current conditions, i.e. the equal primary DC components are transformed into unequal secondary DC components due to different time constants of the secondary circuits. This produces a DC component in the differential current which increases the pickup values of the differential stage for a short period. In this case, characteristic 1 is increased by factor 2.

Harmonic Stabilisation

In transformers and shunt reactors in particular, high short-time magnetising currents may be present during power-up (inrush currents). These currents enter the protected zone but do not exit it again. They thus produce differential quantities, as they seem like single-end fed fault currents. Also during parallel connection of transformers, or an overexcitation of a power transformer, differential quantities may occur due to magnetising currents caused by increased voltage and/or decreased frequency.

The inrush current can amount to a multiple of the rated current and is characterised by a considerable 2nd harmonic content (double rated frequency), which is practically absent during a short-circuit. If the second harmonic content in the differential current exceeds a selectable threshold, tripping is blocked by the differential current threshold.

Apart from the second harmonic, another harmonic can be selected in 7UT613/63x to cause blocking. The 3rd or the 5th harmonic are selectable.

Steady-state overexcitation is characterised by odd harmonics. The 3rd or 5th harmonic is suitable to detect overexcitation. As the third harmonic is often eliminated in transformers (e.g. in a delta winding), the fifth harmonic is more commonly used.

Converter transformers also produce odd harmonics which are practically absent in the case of an internal short-circuit.

The differential currents are analysed for harmonic content. For frequency analysis digital filters are used which perform a Fourier analysis of the differential currents. As soon as the harmonics' content exceeds the set thresholds, a restraint of the respective phase evaluation is started. The filter algorithms are optimised for transient behaviour such that additional measures for stabilisation during dynamic conditions are not necessary.

Since the harmonic restraint operates individually per phase, the protection is fully operative even when the transformer is switched onto a single-phase fault, whereby inrush currents may possibly be present in one of the healthy phases. It is, however, possible to set the protection in a way that when the permissible harmonic content in the current of only one single phase is exceeded, not only the phase with the inrush current but also the remaining phases of the differential stage are blocked. This cross-block can be limited to a selectable duration.

Fast Unrestrained Trip with High-Current Faults

High-current faults in the protected zone may be cleared instantaneously without regard to the restraint currents when the current amplitude excludes an external fault. If the protected object has a high direct impedance (transformers, generators, series reactors), a threshold can be found which can never be exceeded by a through-fault current. This threshold (primary) is, for example, for a power transformer.

$$\frac{1}{u_{sc\ transf}} \cdot I_{Ntransf}$$

The differential protection of the 7UT613/63x provides such an unstabilised high-current trip stage. This stage can operate even when, for example, a considerable second harmonic is present in the differential current caused by current transformer saturation by a DC component in the fault current, which could be interpreted by the inrush restraint function as an inrush current.

Fast tripping uses both the fundamental component of the differential current as well as instantaneous values. Instantaneous value processing ensures fast tripping even if the current fundamental component was strongly attenuated by current transformer saturation. Due to the possible DC offset after fault inception, the instantaneous value stage operates only above twice the set threshold.

Increase of the Pickup Value on Startup

The increase of pickup value is especially suited for motors. In contrast to the inrush current of transformers the inrush current of motors is a traversing current. Differential currents, however, can emerge if current transformers still contain different remanent magnetisation before energise. Therefore, the transformers are energised from different operation points of their hysteresis. Although differential currents are usually small, they can be harmful if the differential protection is set very sensitive.

An increase of the pickup value on startup provides additional security against overfunctioning when a non-energised protection object is switched in. As soon as the restraint current of one phase has undershot a settable value **I-REST. STARTUP**, the increase of the pickup value is activated. As the restraint current is twice the through-flowing current in normal operation, its undershooting of that threshold is a criterion for detecting that the protected object is not energised. The pickup value **I-DIFF>** and the other branches of the IDiff> stage are now increased by a settable factor (figure 2-22).

The return of the restraint current indicates the startup. After a settable time **T START MAX** the increase of the characteristic is undone. Current ratios I_{diff}/I_{stab} close to the fault characteristic (≥ 80 % of the fault characteristic slope) cause tripping even before the time **T START MAX** has lapsed.

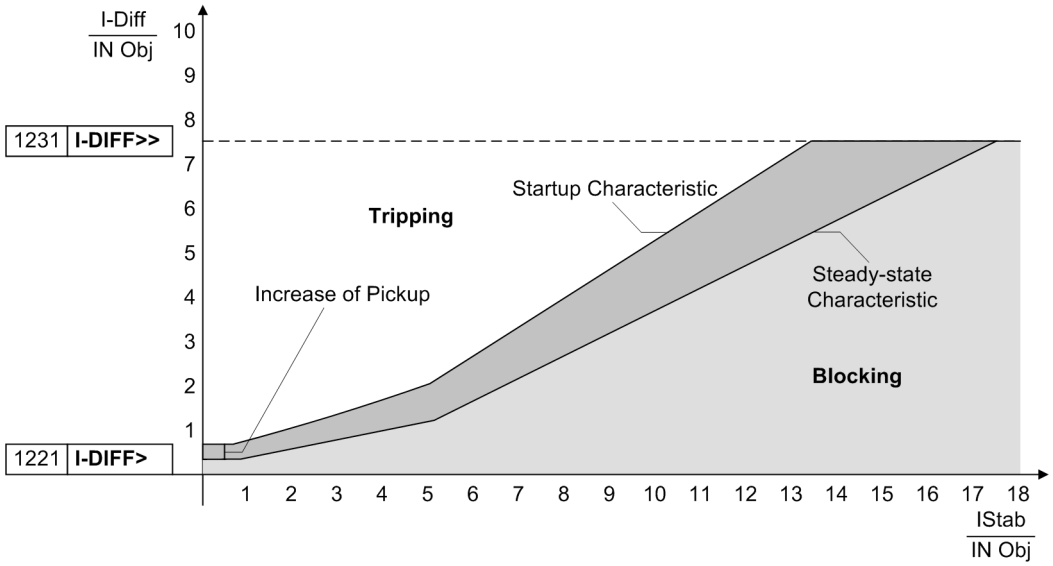

Figure 2-22 Increase of pickup value of the stage on startup

Tripping Characteristic

Figure 2-23 illustrates the complete tripping characteristic of the 7UT613/63x. The characteristic branch **a** represents the sensitivity threshold of the differential protection (setting **I-DIFF>**) and considers constant error currents such as magnetising currents.

Branch **b** considers current-proportional errors which may result from transformation errors of the main CTs or the input CTs of the device, or which for example may be caused by mismatching or by the influence of tap changers in transformers with voltage control.

For high currents which may give rise to current transformer saturation, characteristic branch **c** provides for additional restraint.

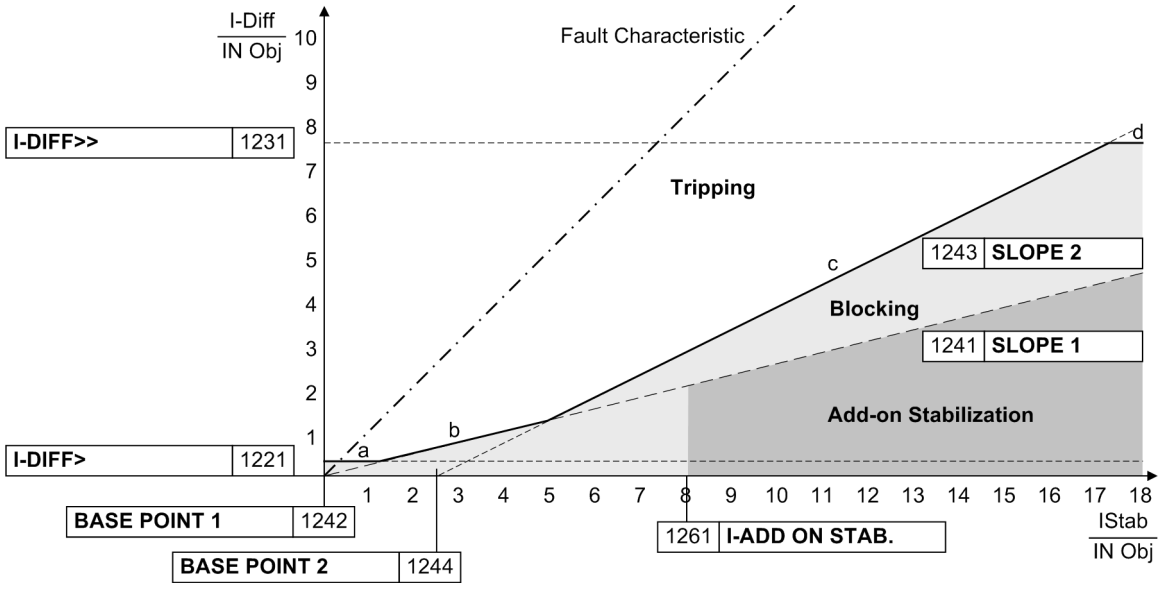

Figure 2-23 Tripping characteristic of the differential protection

Differential currents above branch **d** cause immediate trip regardless of the restraining quantity and harmonic content (setting **I-DIFF>>**). This is the operating range of the „Fast Unrestrained Trip with High-current Faults“.

The area of **add-on restraint** is the operational area of the saturation indicator (see margin heading „Add-on Restraint during External Faults“).

The values I_{diff} and I_{stab} are assigned to the trip characteristic by the differential protection. If the quantities result in an operating point which lies in the trip area, a trip signal is given. If the current conditions I_{diff} /I_{stab} appear near the fault characteristic ($\geq$ 9 80 % of the slope of the fault characteristic), tripping occurs even when the trip characteristic has been excessively increased due to add-on stabilisation, startup or DC current detection.

Fault Detection, Dropout

Normally, a differential protection does not need a „pickup“, since the condition for a fault detection is identical to the trip condition. Like all SIPROTEC 4 devices, however, the differential protection feature of the 7UT613/63x has a pickup that is the starting point for a number of subsequent activities. The pickup marks the beginning of a fault. This is necessary e.g. for creating fault logs and fault records. However, internal functions also require the instant of fault inception even in case of an external fault, e.g. the saturation indicator which has to operate correctly in case of an external fault.

As soon as the fundamental wave of the differential current exceeds approximately 85 % of the set value or the restraining current reaches 85 % of the add-on restraint area, the protection picks up. A pickup signal is also issued when the high-speed trip stage for high-current faults picks up.

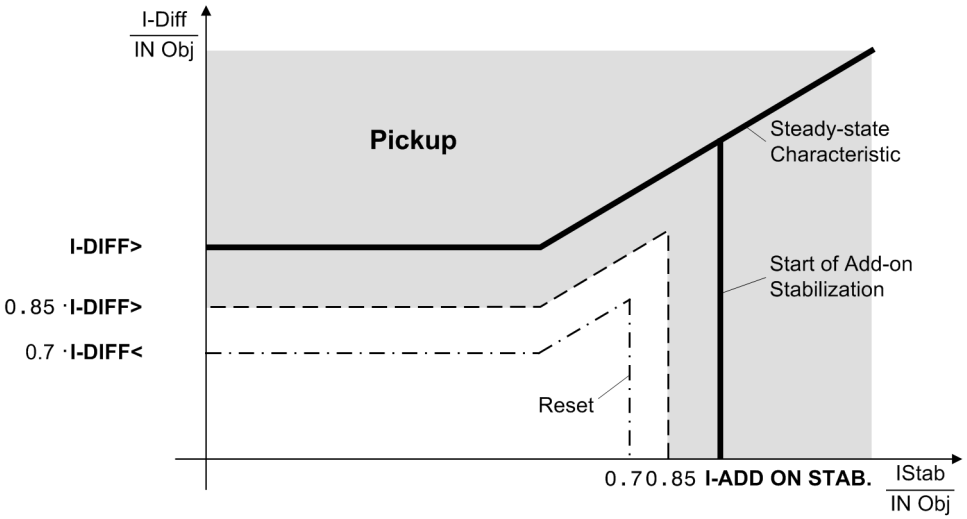

Figure 2-24 Pickup of the Differential Protection

If restraint by higher-order harmonics is activated, the system first performs a harmonic analysis (approx. 1 cycle) to check the restraint conditions as the case may be. Otherwise, tripping occurs as soon as the tripping conditions are fulfilled.

For special cases, the trip command can be delayed. The following logic diagram illustrates the tripping logic.

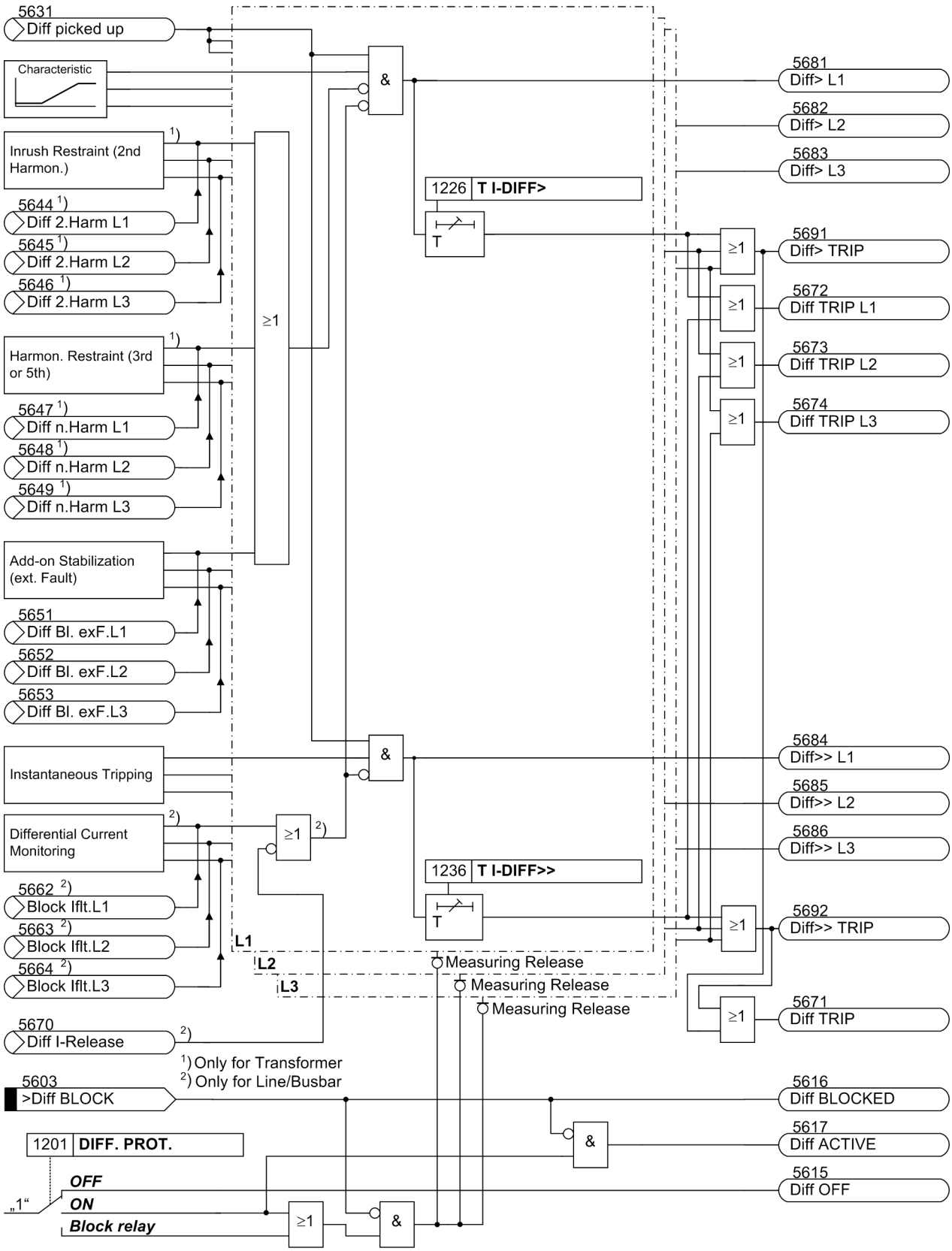

Figure 2-25 Tripping logic of the differential protection (simplified)

A dropout is detected when, during 2 cycles, pick-up is no longer recognised in the differential value, i.e. the differential current has fallen below 70 % of the set value, and the other pickup conditions are no longer fulfilled either.

If a trip command has not been initiated, the fault is considered ended on dropout.

If a trip command had been initiated, it is maintained for the minimum command duration set in the general device data for all protection functions (see also 2.1.4). The trip command will not be reset until all other dropout conditions mentioned above are fulfilled as well.

2.2.2 Differential Protection for Transformers

Matching of the Measured Values

In power transformers, generally, the secondary currents of the current transformers are not equal when a current flows through the power transformer, but depend on the transformation ratio and the connection group of the protected power transformer, and the rated currents of the current transformers. The currents must therefore be matched in order to become comparable.

Matching to the various power transformer and current transformer ratios and of the phase displacement according to the vector group of the protected transformer is performed purely mathematically. As a rule, external matching transformers are not required.

The input currents are converted in relation to the power transformer rated currents. This is achieved by entering the rated transformer data, such as rated power, rated voltage and rated primary currents of the current transformers, into the protection device (Subsection „General Power System Data“ under margin heading „Object Data with Transformers“, and „Current Transformer Data for 3-phase Measuring Locations“).

Figure 2-26 shows an example of magnitude matching. The primary nominal currents of the two sides (windings) S1 (378 A) and S2 (1663 A) are calculated from the rated apparent power of the transformer (72 MVA) and the nominal voltages of the windings (110 kV and 25 kV). Since the nominal currents of the current transformers deviate from the nominal currents of the power transformer sides, the secondary currents are multiplied with the factors k1 and k2. After this matching, equal current magnitudes are achieved at both sides under nominal conditions of the power transformer.

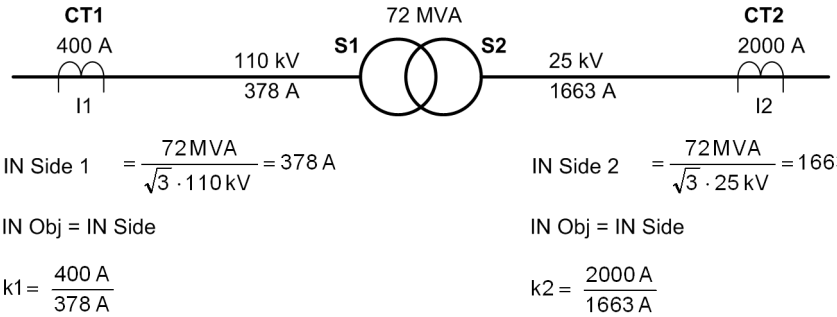

Figure 2-26 Magnitude matching — example of a two-winding power transformer (phase relation not considered)

Concerning power transformers with more than two windings, the windings may have different power ratings. In order to achieve comparable currents for the differential protection, all currents are referred to the winding (= side) with the highest power rating. This apparent power is named the rated power of the protected object.

Figure 2-27 shows an example of a three-winding power transformer. Winding 1 (S1) and 2 (S2) are rated for 72 MVA; The settings recommended are the same as in figure 2-26. But the third winding (S3) has 16 MVA rating (e.g. for auxiliary supply). The rated current of this winding (= side of the protected object) results in 924 A. On the other hand, the differential protection has to process comparable currents. Therefore, the currents of this winding must be referred to the rated power of the protected object, i.e. 72 MVA. This results in a rated current (i.e. the current under nominal conditions of the protected object, 72 MVA) of 4157 A. This is the base value for the third winding: These currents must be multiplied by the factor k3.

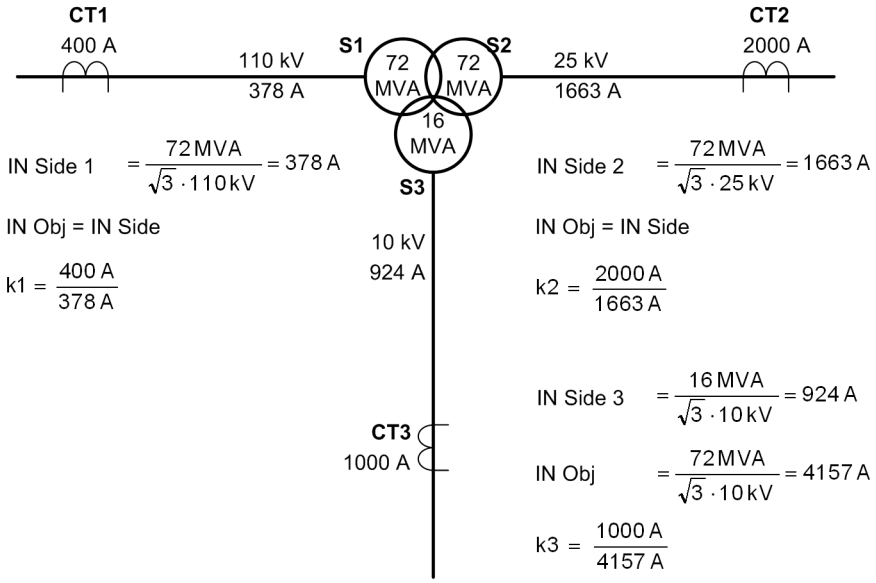

Figure 2-27 Magnitude matching — example of a three-winding power transformer (phase relation not considered)

The device carries out this magnitude matching internally, based on the nominal values set according to Subsection „General Power System Data“ under margin heading „Object Data with Transformers“, and „Current Transformer Data for 3-phase Measuring Locations“). Once the vector group has been entered, the protective device is capable of performing the current comparison according to fixed formulae.

Conversion of the currents is performed by programmed coefficient matrices which simulate the difference currents in the transformer windings. All conceivable vector groups (including phase exchange) are possible. In this regard, the conditioning of the starpoint(s) of the power transformer is also essential.

Non-earthed Transformer Starpoint

Figure 2-28 illustrates an example for a power transformer Yd5 (wye-delta with 150° phase displacement) without any earthed starpoint. The figure shows the windings (above) and the vector diagrams of symmetrical currents (below). The general form of the matrix equation is:

$$(I_m) = k \cdot (K) \cdot (I_n)$$

- (I_m) Matrix of the matched currents $\underline{I}_A$, $\underline{I}_B$, $\underline{I}_C$,
- k Constant factor for magnitude matching,
- (C) Coefficient matrix, dependent on the vector group,
- $(\underline{I}_n)$ Matrix of the phase currents $\underline{I}_{L1}$, $\underline{I}_{L2}$, $\underline{I}_{L3}$.

On the left (delta) winding, the matched currents $\underline{I}_A$, $\underline{I}_B$, $\underline{I}_C$ are derived from the difference of the phase currents $\underline{I}_{L1}$, $\underline{I}_{L2}$, $\underline{I}_{L3}$. On the right (wye) side, the matched currents are equal to the phase currents (magnitude matching not considered).

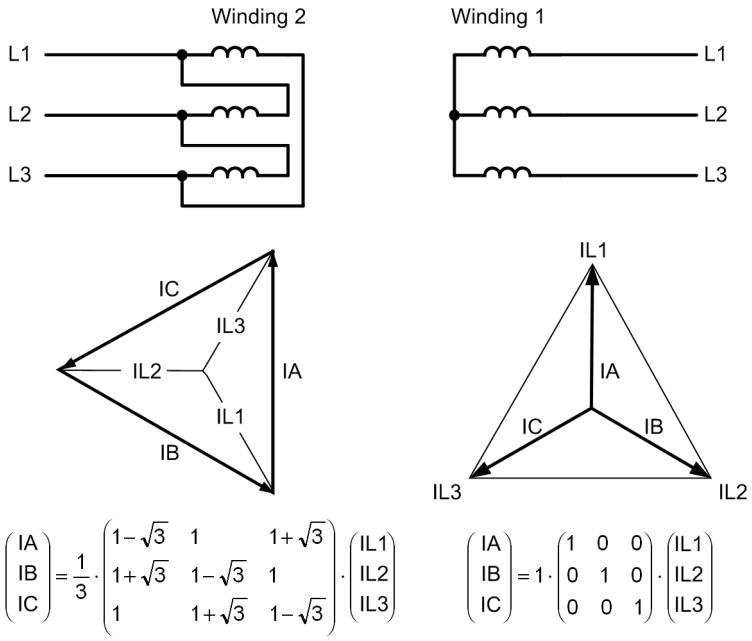

Figure 2-28 Matching the transformer vector group, example Yd5 (magnitudes not considered)

Since there is no point earthed within the protected zone, no considerable zero sequence current can be produced within the protected zone in case of an earth fault outside the protected zone, regardless whether or not the system starpoint is earthed anywhere else in the system. In case of an earth fault within the protected zone, a zero sequence current may occur at a measuring location if the system starpoint is earthed anywhere else or another earth fault is present in the system (double earth fault in a non-earthed system). Thus, zero sequence currents are of no concern for the stability of the differential protection as they cannot occur in case of external faults.

However, in case of internal earth faults, the zero sequence currents are practically fully included in the differential quantity because they pass the measuring points from outside. Even higher earth fault sensitivity during internal earth fault is possible by means of the time overcurrent protection for zero sequence currents (section 2.4.1) and/or the single-phase time overcurrent protection (section 2.7),

Earthed Starpoint

Differential protection makes use of the fact that the total of all currents flowing into the protected object is zero in healthy operation. If the starpoint of a power transformer winding is connected to earth, a current can flow into the protected zone across this earth connection in case of earth faults. Consequently, this current should be included in the current processing in order to obtain a complete image of the in-flowing quantities. Figure 2-29 shows an external earth fault which produces an out-flowing zero sequence current ($-I_{L3} = -3 \cdot I_0$), which corresponds with the in-flowing starpoint current ($I_{St} = 3 \cdot I_0$). As a result, these currents cancel each other out.

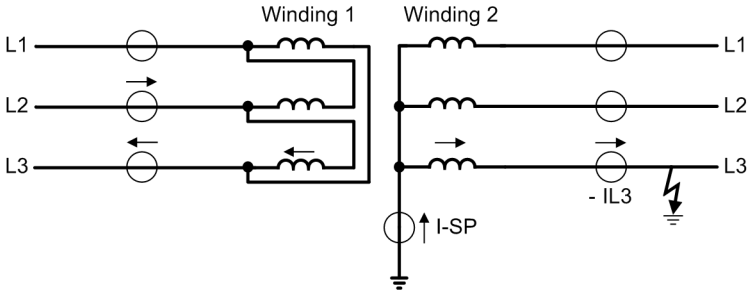

Figure 2-29 Example for an earth fault outside a transformer with current distribution

The complete matrix equation for the earthed side (right) is in this case, including all in-flowing currents:

$$\begin{pmatrix} \underline{I}_A \\ \underline{I}_B \\ \underline{I}_C \end{pmatrix} = 1 \cdot \begin{pmatrix} 1 & 0 & 0 \\ 0 & 1 & 0 \\ 0 & 0 & 1 \end{pmatrix} \cdot \begin{pmatrix} \underline{I}_{L1} \\ \underline{I}_{L2} \\ \underline{I}_{L3} \end{pmatrix} + \frac{1}{3} \cdot \begin{pmatrix} \underline{I}_{SP} \\ \underline{I}_{SP} \\ \underline{I}_{SP} \end{pmatrix}$$

$\underline{I}_{SP}$ corresponds to $-3\ \underline{I}_0$ in case of through-flowing current. The zero sequence current is included in case of an internal fault (from $\underline{I}_0 = {}^1/_3\ \underline{I}_{SP}$); in case of an external earth fault, the zero sequence current component of the line currents $3 \cdot \underline{I}_0 = (\underline{I}_{L1} + \underline{I}_{L2} + \underline{I}_{L3})$ (negative here) is compensated by the starpoint current $\underline{I}_{SP}$. In this way, almost full sensitivity (with zero sequence current) is achieved for internal earth faults and full elimination of the zero sequence current in case of external earth faults. For consideration of the earth fault current, the advanced parameter diff protection with measured earth current, side x must be switched on (addresses 1211 **DIFFw.IE1-MEAS** to 1215 **DIFFw.IE5-MEAS** = ***YES***).

Even higher earth fault sensitivity during internal earth fault is possible by means of the restricted earth fault protection (section 2.3).

Starpoint Current not Available

In many cases, however, the starpoint current is not available. The total summation of the in-flowing currents is thus not possible because I_{SP} is missing. In order to avoid false formation of the differential current, the zero sequence current must be eliminated from the line currents ($-I_{L3} = -3 \cdot I_0$).

Figure 2-30 shows an example of a YNd5 vector group with earthed starpoint on the Y-side.

In figure 2-30 on the left side, the zero sequence currents cancel each other because of the calculation of the current differences. This complies with the fact that zero sequence current is not possible outside the delta winding. On the right side, the zero sequence current must be eliminated if the starpoint current cannot be included. This results from the matrix equation, e.g. for I_A:

$^1/_3 \cdot (2\ \underline{I}_{L1} - 1\ \underline{I}_{L2} - 1\ \underline{I}_{L3}) = {}^1/_3 \cdot (3\ \underline{I}_{L1} - \underline{I}_{L1} - \underline{I}_{L2} - \underline{I}_{L3}) = {}^1/_3 \cdot (3\ \underline{I}_{L1} - 3\ \underline{I}_0) = (\underline{I}_{L1} - \underline{I}_0)$.

Zero sequence current elimination achieves that fault currents which flow via the transformer during earth faults in the network in case of an earth point in the protected zone (transformer starpoint or starpoint former by neutral earth reactor) are rendered harmless without any special external measures. Refer e.g. to Figure 2-30: Because of the earthed starpoint, a zero sequence current occurs on the right side during a network fault but not on the left side. Comparison of the phase currents, without zero sequence current elimination and without inclusion of the starpoint current, would cause a wrong result (current difference in spite of an external fault).

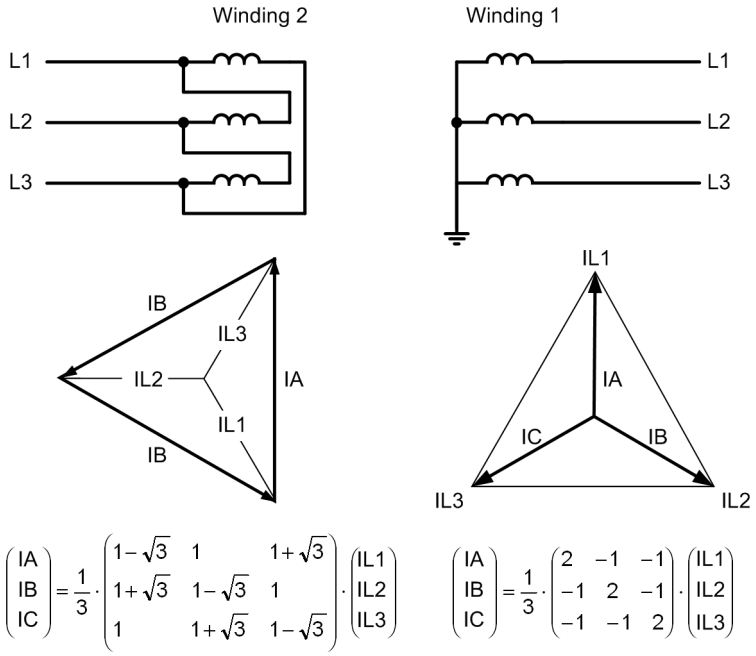

Figure 2-30 Matching the transformer vector group, example YNd5 (magnitudes not considered)

Figure 2-31 shows an example of an earth fault on the delta side outside the protected zone if an earthed starpoint former (zigzag winding) is installed within the protected zone. Here, a zero sequence current occurs on the right side but not on the left, as above. If the starpoint former were outside the protected zone (i.e. CTs between power transformer and starpoint former), the zero sequence current would not pass through the measuring point (CTs) and would not have any harmful effect.

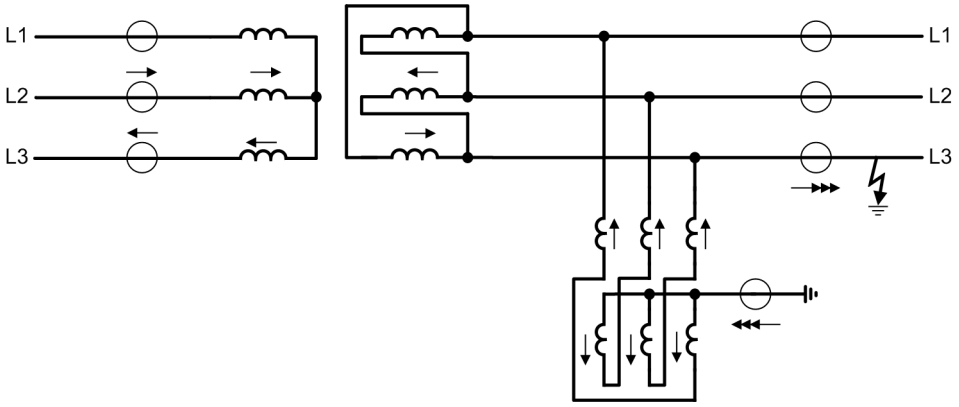

Figure 2-31 Example of an earth fault outside the protected transformer with a neutral earthing reactor within the protected zone

The disadvantage of elimination of the zero sequence current is that the protection becomes less sensitive (factor $^2/_3$ because the zero sequence current amounts to $^1/_3$ in case of an earth fault in the protected area. Therefore, elimination is suppressed in case the starpoint is not earthed (see figure 2-28), or the starpoint current can be included (figure 2-29). If, for example, a surge voltage arrester is connected to the starpoint, one should do without the advantage of that option in order to avoid recognition of a breakdown of the surge voltage arrester as an internal fault. For this purpose, the starpoint of the respective side must be set to ***Earthed*** (addresses 313 **STARPNT SIDE 1**, 323 **STARPNT SIDE 2**, 333 **STARPNT SIDE 3**, 343 **STARPNT SIDE 4**, 353 **STARPNT SIDE 5**).

Use on Auto-Transformers

In order to achieve comparable currents for the differential protection, all currents are referred to the winding (= side) with the highest power rating. This apparent power is named the rated power of the protected object. If this rated apparent power occurs several times, the side with the higher nominal current is selected as reference side.

Auto-connected windings in auto-transformers can only be connected Y(N)y0 (figure 2-32). If the starpoint is earthed, all auto-connected windings connected to the system parts (higher and lower voltage system) are affected. The zero sequence system of both system parts is coupled because of the common starpoint.

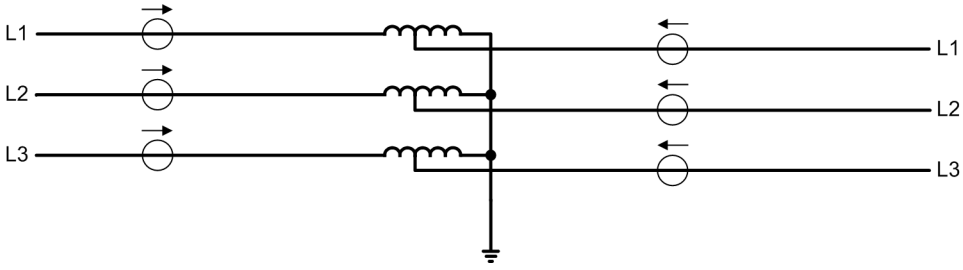

Figure 2-32 Auto-transformer with earthed starpoint

In this case, too, the starpoint current $\underline{I}_{SP}$ would be required for a complete treatment of all currents flowing into the protected zone. If it is not accessible, the zero sequence current from the phase currents must be eliminated. This is achieved by the application of the matrices with zero sequence current elimination. As for separate windings,

the differential protection in case of earth faults in the protected zone is less sensitive by the factor $^2/_3$, because the zero sequence current is $^1/_3$ of the fault current.

If, however, the starpoint current is accessible and connected to the device, then all currents flowing into the protected zone are available. The zero sequence currents in the phases will then be cancelled at the externally located earth faults by the sum of the starpoint current. In case of internally located earth fault, the full sensitivity of the differential protection is ensured. For consideration of the earth fault current, the advanced parameter diff protection with measured earth current, side x must be switched on (addresses 1211 **DIFFw.IE1-MEAS** to 1215 **DIFFw.IE5-MEAS** = ***YES***).

Increased earth fault sensitivity during internal fault can be achieved by using the restricted earth fault protection or the high-impedance differential protection.

Auto-transformer Bank with Current-sum Comparison

A further possibility to increase the earth fault sensitivity is useful for auto-transformer banks where 1 single-phase auto-transformers are arranged to a transformer bank. In this arrangement, single-phase earth faults are the most probable whereas inter-winding faults (between two windings) can be excluded because of the physical separation of the three transformers. A current comparison protection can be built up over each of the auto-connected windings which compares the currents flowing into the „total winding“. However, a further galvanically separated winding (usually delta winding), can not be protected by means of this protection method. A further requirement is that during configuration of the functional scope **PROT. OBJECT** = ***Autotr. mode*** is set and the protection topology is determined accordingly (section 2.1.4, subsection „Topology of the Protected Object“ under margin heading „Auto-transformer Banks“).

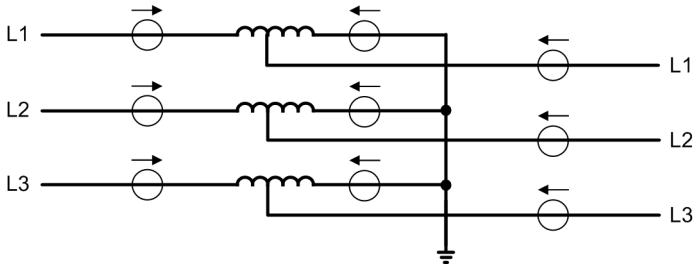

Figure 2-33 Auto-transformer bank with current transformer in starpoint connection

Use on Single-phase Auto-transformers

Single-phase transformers can be designed with one or two windings per side; in the latter case, the winding phases can be wound on one or two iron cores. In order to ensure that optimum matching of the currents would be possible, always two measured current inputs shall be used even if only one current transformer is installed on one phase. The currents are to be connected to the inputs I_{L1} and I_{L3} of the device, they are designated I_{L1} and I_{L3} in the following.

If two winding phases are available, they may be connected either in series (which corresponds to a wye-winding) or in parallel (which corresponds to a delta-winding). The phase displacement between the windings can only be 0° or 180°. Figure 2-34 shows an example of a single-phase power transformer with two phases per side with the definition of the direction of the currents.

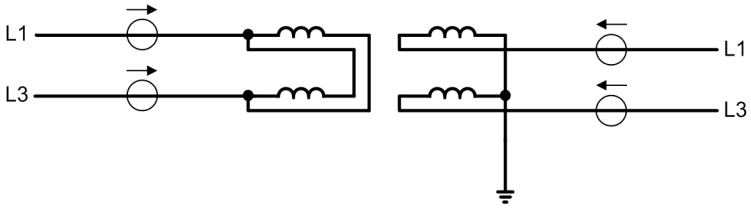

Figure 2-34 Example of a single-phase transformer with current definition

Like with three-phase power transformers, the currents are matched by programmed coefficient matrices which simulate the difference currents in the transformer windings. The common form of these equations is:

$(\underline{I}_m) = k \cdot (K) \cdot (\underline{I}_n)$

with

$(\underline{I}_m)$ - matrix of the matched currents $\underline{I}_A$, $\underline{I}_C$,

k - constant factor for magnitude matching,

(K) - coefficient matrix,

$(\underline{I}_n)$ - matrix of the phase currents $\underline{I}_{L1}$, $\underline{I}_{L3}$.

Since the phase displacement between the windings can only be 0° or 180°, matching is relevant only with respect to the treatment of the zero sequence current (besides magnitude matching). If a „Starpoint“ of the protected transformer winding is not earthed (left in figure 2-34), the phase currents can directly be used.

If the „starpoint“ is earthed (figure 2-34 right side), the zero sequence current must be eliminated unless it can be compensated by considering the „starpoint current“. By eliminating the zero sequence current, fault currents which flow through the transformer during earth faults in the network in case of an earth point in the protected zone (transformer starpoint) are rendered harmless without any special external measures.

The matrices for the left and the right winding as per figure 2-34 are:

$$\begin{pmatrix} \underline{I}_A \\ \underline{I}_C \end{pmatrix} = 1 \cdot \begin{pmatrix} 1 & 0 \\ 0 & 1 \end{pmatrix} \cdot \begin{pmatrix} \underline{I}_{L1} \\ \underline{I}_{L3} \end{pmatrix} \qquad \begin{pmatrix} \underline{I}_A \\ \underline{I}_C \end{pmatrix} = \frac{1}{2} \cdot \begin{pmatrix} 1 & -1 \\ -1 & 1 \end{pmatrix} \cdot \begin{pmatrix} \underline{I}_{L1} \\ \underline{I}_{L3} \end{pmatrix}$$

The disadvantage of elimination of the zero sequence current is that the differential protection becomes less sensitive (by factor $^1/_2$ because the zero sequence current amounts to $^1/_2$ in case of an earth faults in the protected zone). Higher earth fault sensitivity can be achieved if the „starpoint“ current is available, i.e. if a CT is installed in the „starpoint“ connection to earth and this current is fed to the device (figure 2-35). For consideration of the earth fault current, the advanced parameter diff protection with measured earth current, side x must be switched on (addresses 1211 **DIFFw.IE1-MEAS** to 1215 **DIFFw.IE5-MEAS** = ***YES***).

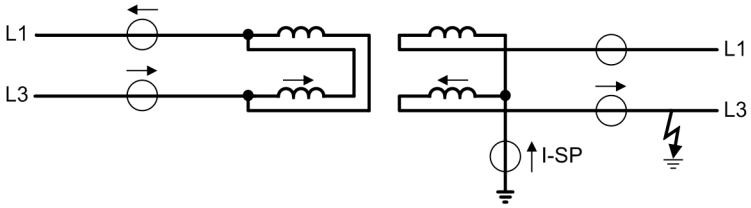

Figure 2-35 Example of an earth fault outside a single-phase transformer with current distribution

The matrix equation in this cases is as follows:

$$\begin{pmatrix} I_A \\ I_C \end{pmatrix} = 1 \cdot \begin{pmatrix} 1 & 0 \\ 0 & 1 \end{pmatrix} \cdot \begin{pmatrix} I_{L1} \\ I_{L3} \end{pmatrix} \qquad \begin{pmatrix} I_A \\ I_C \end{pmatrix} = \frac{1}{2} \cdot \begin{pmatrix} 1 & 0 \\ 0 & 1 \end{pmatrix} \cdot \begin{pmatrix} I_{L1} \\ I_{L3} \end{pmatrix} + \frac{1}{2} \cdot \begin{pmatrix} I_{SP} \\ I_{SP} \end{pmatrix}$$

Where $\underline{I}_{Sp}$ is the current measured in the „Starpoint“ connection.

The zero sequence current is not eliminated. Instead of this, for each phase half of the starpoint current $\underline{I}_{SP}$ is added. The effect is that the zero sequence current is considered in case of an internal ground fault (from $\underline{I}_0 = -1/2 \cdot \underline{I}_{Sp}$), whilst the zero sequence current is eliminated in case of an external fault because the zero sequence current on the terminal side $2 \cdot \underline{I}_0 = (\underline{I}_{L1} + \underline{I}_{L3})$ compensates for the starpoint current $\underline{I}_{Sp}$. Almost full sensitivity (with zero sequence current) is thus achieved for internal earth faults and full elimination of the zero sequence current in case of external earth faults.

Even higher earth fault sensitivity during internal earth fault is possible by means of the restricted earth fault protection (section 2.3).

2.2.3 Differential Protection for Generators, Motors, and Series Reactors

Matching of the Measured Values

Equal conditions apply for generators, motors, and series reactors. The protected zone is limited by the sets of current transformers at each side of the protected object. On generators and motors, the CT are installed in starpoint connection at the terminal side. Since the current direction is normally defined as positive in the direction of the protected object, for differential protection schemes, the definitions shown in figure 2-36 apply.

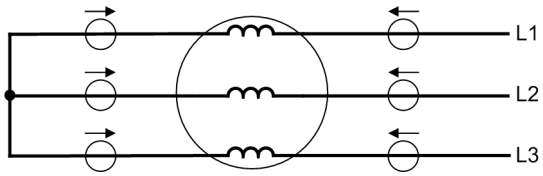

Figure 2-36 Definition of current direction with longitudinal differential protection

The differential protection in 7UT613/63x refers all currents to the rated current of the protected object. The device is informed about the rated machine data during setting: the rated apparent power, the rated voltage, and the rated currents of the current transformers. Measured value matching is therefore reduced to magnitude factors.

Transverse Differential Protection

The use as transverse differential protection involves a special point. For this application, the definition of the current direction is shown in figure 2-37.

For transverse differential protection, the phases connected in parallel constitute the border between the protected zone and the network. A differential current appears in this case only, but always, if there is a current difference within the particular parallel phases so that a fault current in one phase can be assumed.

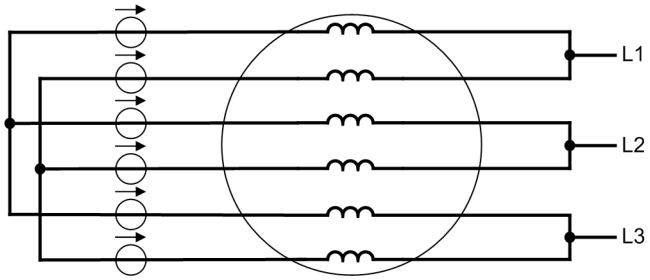

Figure 2-37 Definition of current direction with transverse differential protection

The currents flow into the protected object even in case of healthy operation, in contrast to all other applications. For this reason, the polarity of **one** current transformer set must be reversed, i.e. you must set a „wrong“ polarity, as described in Subsection 2.1.4 under „Current Transformer Data for 3-Phase Measuring Locations“.

Starpoint Conditioning

If the differential protection is used as generator or motor protection, the starpoint condition need not be considered even if the starpoint of the machine is earthed (high- or low-resistant). The phase currents are always equal at both measuring points in case of an external fault. With internal faults, the fault current results always in a differential current.

Nevertheless, increased earth fault sensitivity can be achieved by the„Restricted Earth Fault Protection“ (see section 2.3) or the „High-impedance Differential Protection“ (see section 2.7) .

2.2.4 Differential Protection for Shunt Reactors

If current transformers are available for each phase at both sides of a shunt reactor, the same considerations apply for series reactors.

In most cases, current transformers are installed in the lead phases and in the starpoint connection (see figure 2-38). In this case, comparison of the zero sequence currents is reasonable. The „Restricted Earth Fault Protection“ is most suitable for this application (see 2.3).

If current transformers are installed in the line at both sides of the connection point of the reactor (see figure 2-38), the same conditions as for auto-transformers apply. Such an arrangement is therefore treated like an auto-transformer.

A neutral earthing reactor (starpoint former) outside the protected zone of a power transformer can be treated as a separate protected object provided it is equipped with current transformers like a shunt reactor. The difference is that the starpoint former has a low impedance for zero sequence currents.

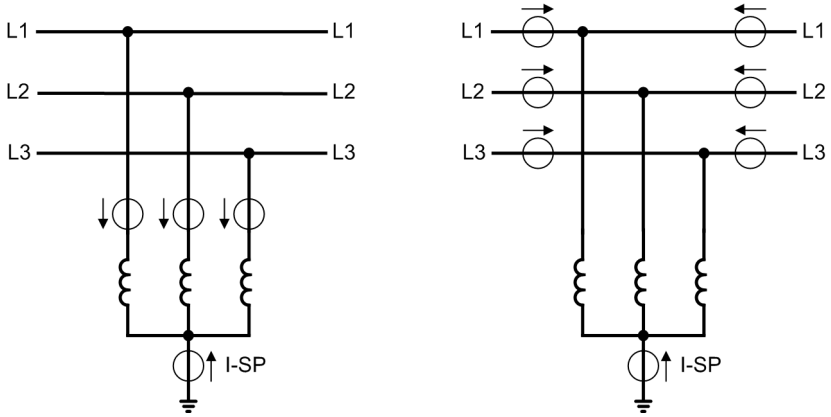

Figure 2-38 Definition of current direction on a shunt reactor

2.2.5 Differential Protection for Mini-Busbars and Short Lines

A mini-busbar or branch-point is defined here as a three-phase, coherent piece of conductor which is limited by sets of current transformers. Examples are short stubs or mini-busbars. The differential protection in this operation mode is not suited to transformers; use the function „Differential Protection for Transformers“ for this application. Even for other inductors, like series or shunt reactors, the busbar differential protection should not be used because of its lower sensitivity.

This operation mode is also suitable for short lines or cables. „Short“ means in this context that the current transformer connections from the CTs to the device do not cause impermissible load to the current transformers. On the other hand, capacitive charging currents do not harm this operation because the differential protection is normally less sensitive with this application.

Since the current direction is normally defined as positive in the direction of the protected object, this results in the definitions as illustrated in figures 2-39 and 2-40.

The models 7UT613 and 7UT633 allow mini-busbars with up to 3 feeder or lines with up to 3 terminals (“Teed lines”) to be protected, 5 feeders can be protected using 7UT635. Figure 2-41 shows the example of a busbar with 4 feeders.

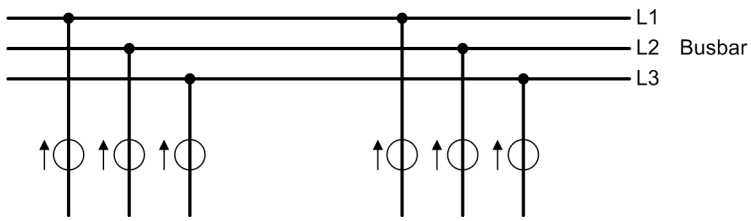

Figure 2-39 Definition of current direction at a branch-point (busbar with 2 feeders)

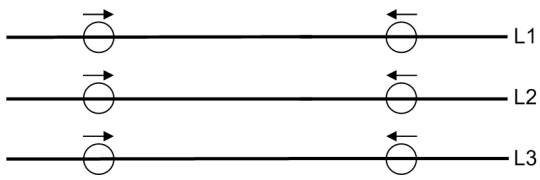

Figure 2-40 Definition of current direction at short lines

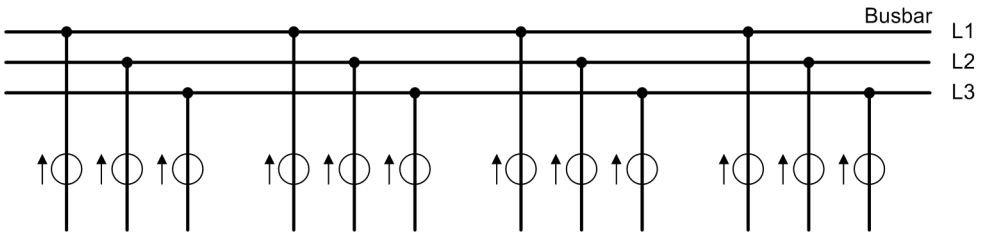

Figure 2-41 Definition of current direction at busbar with 4 feeders

The differential protection feature of the 7UT613/63x refers all currents to the rated current of the protected object. The device is informed during setting about the rated current of the protected object (in this case the busbar or line), and about the primary rated CT currents. Measured value matching is therefore reduced to magnitude factors. The basis for current comparison is the rated busbar current (address 371 **I PRIMARY OP.**). If the feeders or ends have different rated currents, the largest of the three rated currents is used as the basis for the current comparison, and all other currents are converted accordingly. As a rule, no external matching devices are necessary.

Differential Current Monitoring

Whereas a high sensitivity of the differential protection is normally required for transformers, reactors, and rotating machines in order to detect even small fault currents, high fault currents are expected in case of faults on a busbar or a short line so that a higher pickup threshold (above rated current) is conceded here. This allows for a continuous monitoring of the differential currents on a low level. A small differential current in the range of operational currents indicates a fault in the secondary circuit of the current transformers.

This monitor operates phase-selectively. When, during normal load conditions, a differential current is detected in the order of the load current of a feeder, this indicates a missing secondary current, i.e. a fault in the secondary current leads (short-circuit or open-circuit). This condition is annunciated with time delay. The differential protection is blocked in the associated phase at the same time.

Feeder Current Guard

With busbars and short lines, a release of the trip command can be set if a threshold is exceeded by one of the incoming currents. The three phase currents at each measuring location of the protected object are monitored for over-shooting of a set value. Trip command is allowed only when at least one of these currents exceeds a certain (settable) threshold.

2.2.6 Single-phase Differential Protection for Busbars

7UT613/63x Depending on the ordered model, it provides 9 or 12 current inputs of equal design. This allows for a single-phase differential current busbar protection for up to 9 or 12 feeders.

There are two connection possibilities:

- One 7UT613/63x is used for each phase. Each phase of all busbar feeders is connected to one phase dedicated device 7UT613/63x.
- The three phase currents of each feeder are summarised into a single-phase summation current. These currents are fed to one device per feeder.

Phase Dedicated Connection

For each of the phases, a 7UT613/63x is used in case of single-phase connection. The fault current sensitivity is equal for all types of faults. 7UT613 and 7UT633 are suitable for up to 9, 7UT635 for up to 12 feeders.

The differential protection feature of the 7UT613/63x refers all currents to the rated current of the protective object. Therefore, a common rated current must be defined for the entire busbar even if the feeder CTs have different rated currents. This common rated current has been set in address 371 **I PRIMARY OP.**. It is the maximum of the rated currents of all feeders set in the device in the data of the protected object. Measured value matching in the device is thus limited to current quantity factors. No external matching devices are necessary even if the feeders and/or the current transformer sets at the ends of the protected zone have different primary currents.

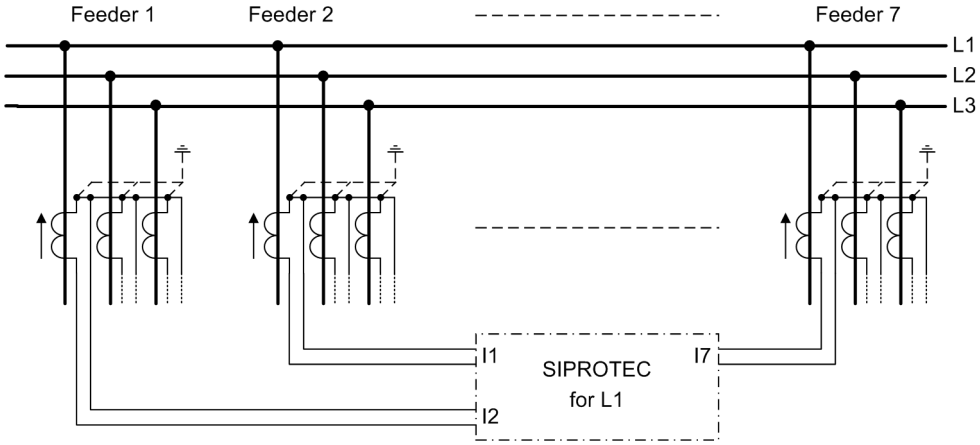

Figure 2-42 Single-phase busbar protection, illustrated L1

Connection via Summation CT

One single device 7UT613/63xis sufficient for a busbar with up to 7 feeders if the device is connected via summation current transformers. The phase currents of each feeder are converted into single-phase current by means of the summation CTs. Current summation is asymmetrical; a different sensitivity is thus valid for different fault types. 7UT613 and 7UT633 are suitable for 9, 7UT635 for 12 feeders.

A common nominal current must be defined for the entire busbar. Matching of the currents can be performed in the summation transformer connections if the feeder CTs have different nominal currents. The output of the summation transformers is normally designed for IM = 100 mA at symmetrical rated busbar current. The nominal current at the device input $I_{N\ Obj}$ = 100 mA is applicable.

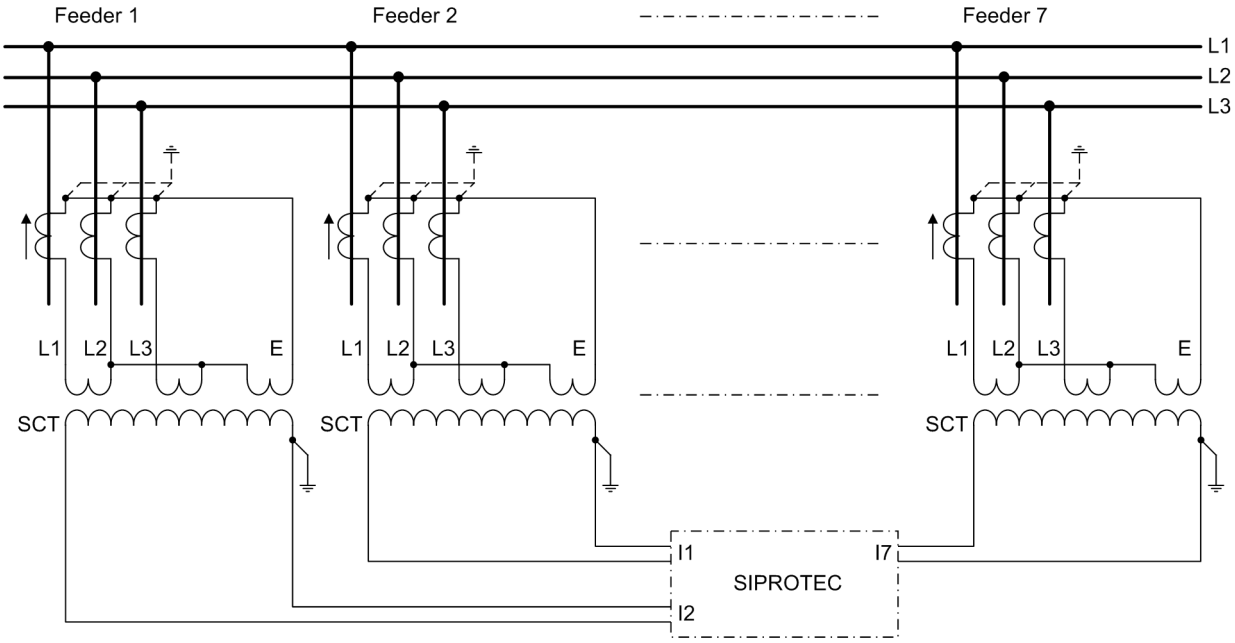

Figure 2-43 Busbar protection with connection via summation current transformers (SCT)

Different schemes are possible for the connection of the current transformers. The same CT connection method must be used for all feeders of a busbar.

The scheme as illustrated in figure 2-44 is the most commonly used. The three input windings of the summation transformer are connected to the CT currents I_{L1}, I_{L3} and I_E. This connection is suitable for all kinds of systems regardless of the conditioning of the system neutral. It is characterised by an increased sensitivity for earth faults.

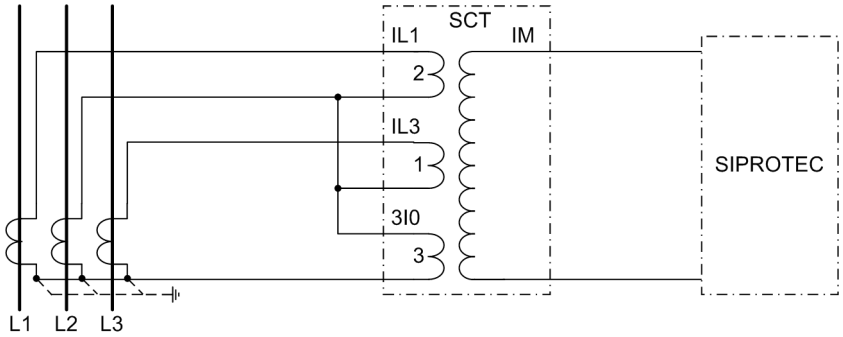

Figure 2-44 Summation Transformer Connection L1-L3-E

For a symmetrical three-phase current (where the earth residual component $I_E = 0$) the single-phase summation current is W = $\sqrt{3}$ times the winding unit value, as shown in figure 2-45, i.e. the summation flux (ampere turns) is the same as it would be for single-phase current $\sqrt{3}$ times the value flowing through the winding with the least number of turns (ratio 1). For three-phase symmetrical fault currents equal to rated current 1 x I_N, the secondary single-phase current is I_M = 100 mA. All relay characteristic operating values are based on this type of fault and this current.

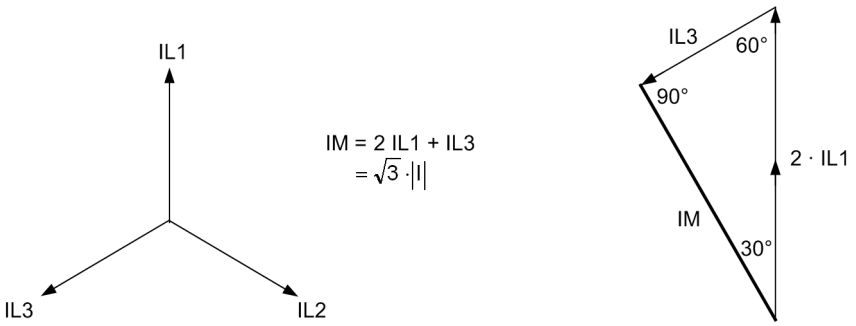

Figure 2-45 Summation of the currents in the summation transformer on connection L1-L3-E

For the connection L1-L3-E (see figure 2-44), the weighting factors W of the summation currents IM for the various fault conditions and the ratios to that given by the three-phase symmetrical faults are shown in table 2-5. On the right hand side is the complementary multiple of rated current I_M = 100 mA which W/√3 would have to be in order to arrive at the summation current I_1. If the current setting values are multiplied with this factor, the actual pickup values result.

Table 2-5 Fault conditions and weighting factors for the CT connection L1-L3-E

Fault	W	W/√3	I_1 for I_M = 100 mA
L1-L2-L3 (sym.)	√3	1,00	1.00 · I_N
L1-L2	2	1,15	0.87 · I_N
L2-L3	1	0,58	1.73 · I_N
L3-L1	1	0,58	1.73 · I_N
L1-E	5	2,89	0.35 · I_N
L2-E	3	1,73	0.58 · I_N
L3-E	4	2,31	0.43 · I_N

The table shows that the differential protection is more sensitive to earth faults and to double earth faults than to those without earth path component. This increased sensitivity is due to the fact that the summation transformer winding in the CT starpoint connection (I_E, residual current (refer to figure 2-44) has the largest number of turns and thus the weighting factor W = 3.

If the higher earth current sensitivity is not necessary, connection according to figure 2-46 can be used. This is reasonable in earthed systems with particularly low zero sequence impedance where earth fault currents may be larger than those under two-phase fault conditions. With this connection, the values given in Table 2-6 below can be recalculated for the seven possible fault conditions in solidly earthed networks.

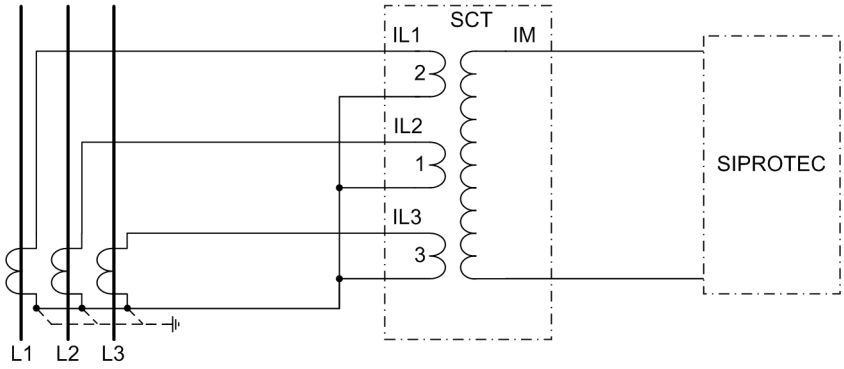

Figure 2-46 Summation transformer connection L1-L2-L3 with decreased earth fault sensitivity

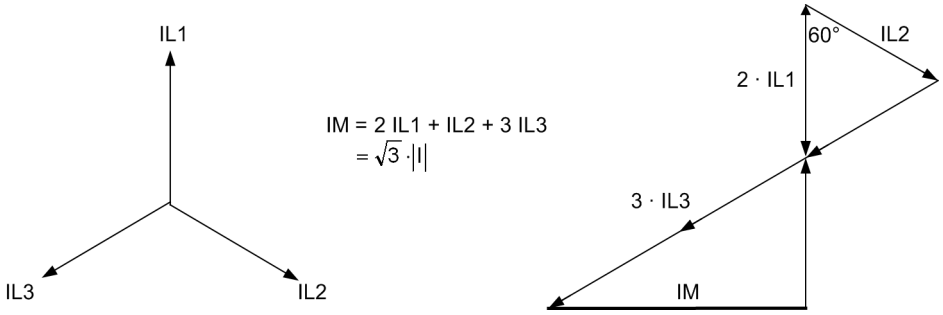

Figure 2-47 Summation of the currents in the summation transformer on connection L1-L2-L3

Table 2-6 Fault conditions and weighting factors for the CT connection L1-L2-L3

Fault	W	W/√3	I_1 for I_M = 100 mA
L1-L2-L3 (sym.)	√3	1,00	1.00 ·I_N
L1-L2	1	0,58	1.73 ·I_N
L2-L3	2	1,15	0.87 I_N
L3-L1	1	0,58	1.73 ·I_N
L1-E	2	1,15	0.87 ·I_N
L2-E	1	0,58	1.73 ·I_N
L3-E	3	1,73	0.58 ·I_N

Comparison with the values in the table 2-5 or L1-L3-E shows that under earth fault conditions the weighting factor W is less than with the standard connection. Thus the thermal loading is reduced to 36 %, i.e. $(1.73/2.89)^2$.

The described connections are examples. Certain phase preferences (especially in systems with non-earthed neutral) can be obtained by cyclic or acyclic exchange of the phases. Further increase of the earth current can be performed by introducing an auto-CT in the residual path, as a further possibility.

The type 4AM5120 is recommended for summation current transformers. These transformers have different input windings which allow for summation of the currents with the ratio 2 : 1 : 3 as well as matching of different primary currents of the main CTs to a certain extent. Figure 2-48 shows the winding arrangement.

The nominal input current of each summation CT must match the nominal secondary current of the connected main CT set. The output current of the summation CT (= input

current of the 7UT613/63x) amounts to I_N = 0.1 A at nominal conditions, with correct matching.

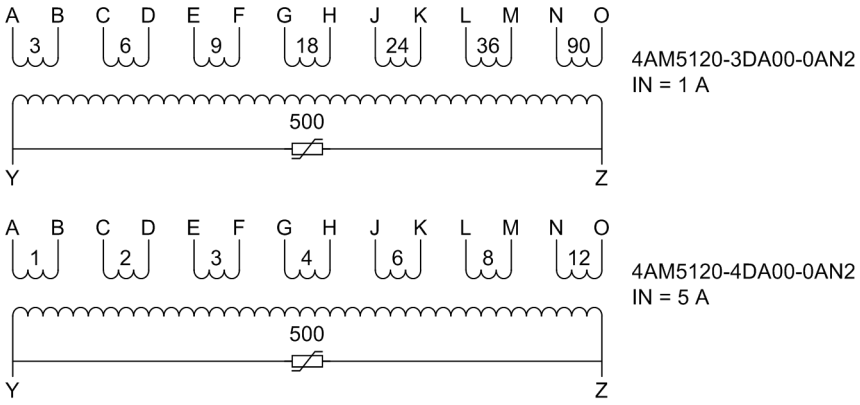

Figure 2-48 Winding arrangement of summation and matching transformers 4AM5120

Differential Current Monitoring

Whereas a high sensitivity of the differential protection is normally required for transformers, reactors, and rotating machines in order to detect even small fault currents, high fault currents are expected in case of faults on a busbar so that a higher pickup threshold (above rated current) is conceded here. This allows for a continuous monitoring of the differential currents on a low level. A small differential current in the range of operational currents indicates a fault in the secondary circuit of the current transformers.

When, during normal load conditions, a differential current is detected in the order of the load current of a feeder, this indicates a missing secondary current, i.e. a fault in the secondary current leads (short-circuit or open-circuit). This condition is annunciated with time delay. The differential protection is blocked at the same time.

Feeder Current Guard

With busbars a release of the trip command can be set if a threshold is exceeded by one of the incoming currents. The currents of each feeder are monitored for overshooting of a set value. Trip command is allowed only when at least one of these currents exceeds a certain (settable) threshold.

2.2.7 Setting Notes

General

Differential protection is only effective and available if this function was set during configuration of the Functional Scope **DIFF. PROT.** = ***Enabled*** (address 112) . If the function is not required ***Disabled*** is to be set.

Additionally, the type of protected object must be decided during configuration (address 105 **PROT. OBJECT**). Only those parameters are offered which are reasonable for the selected type of protected object; all remaining are suppressed.

The differential protection can be switched 1201 or **DIFF. PROT.** in address ***ON OFF***. The option ***Block relay*** allows to operate the protection but the trip output relay is blocked.

Note

When delivered from factory, the differential protection is switched OFF. The reason is that the protection must not be in operation unless at least the connection group (of a transformer) and the matching factors have been set before. Without proper settings, the device may show unexpected reactions (incl. tripping)!

Starpoint Conditioning

If there is a current transformer in the starpoint connection of an earthed transformer winding, i. e. between starpoint and earth electrode, the starpoint current may be taken into consideration for calculations of the differential protection. The earth-fault sensitivity is thus ensured.

If a starpoint is earthed but the earth current is not available, the zero sequence current is eliminated automatically in order to avoid a faulty reaction by the differential protection in case of an external earth fault; the following parameters are then omitted. Equally, the parameters are not available for sides of the protected object that are not earthed. The device has been informed about the earthing conditions during setting of the object properties (section „General Power System Data“ under margin heading „Object Data with Transformers“, addresses 313, 323, 333, 343 and/or 353 and section „Topology of the Protected Object“ under margin heading Assignment of Further „1-phase Measuring Locations“).

The conclusion is: If the starpoint of a side of the protected power transformer is earthed and the starpoint current is fed to the device (via a further 1-phase current input) you can, nevertheless, leave the default setting for inclusion of the earth current unchanged in address 1211 **DIFFw.IE1-MEAS** for side 1 on „Yes“.

This parameter can only be altered with DIGSI under **Additional Settings**. The same considerations apply to any other or additional earthed sides:

- 1212 **DIFFw.IE2-MEAS** for side 2 if earthed,
- 1213 **DIFFw.IE3-MEAS** for side 3 if earthed,
- 1214 **DIFFw.IE4-MEAS** for side 4 if earthed,
- 1215 **DIFFw.IE5-MEAS** for side 5 if earthed.

During setting ***YES*** the corresponding earth current will be considered by the differential protection.

In auto-transformers the earth current flowing in the winding can be considered even if a complete three-phase CT set has been installed as illustrated in figure 2-6, where instead of measuring location Z3 also the three phase currents can be connected to a three-phase measuring input of the device. The device then calculates the sum of the three currents and uses it as earth current. Set address 1216 **DIFFw.IE3phMEAS** to ***YES***. It is required to assign the respective three-phase measuring location to one side and to declare it as earth winding (the side of the auto-connected winding facing the earth electrode). This parameter can only be altered in DIGSI at **Display Additional Settings**.

Differential Current Monitoring

With busbar protection or short-line protection differential current can be monitored. At address 1208 **I-DIFF> MON.** the monitoring can be set to ***ON*** and ***OFF***. Its use is only sensible if one can distinguish clearly between operational error currents caused by missing transformer currents and fault currents caused by a fault in the protected object.

The pickup value **I-DIFF> MON.** (address 1281) must be high enough to avoid a pickup caused by a transformation error of the current transformers and by minimum mismatching of different current transformers. On the other hand, the pickup value must lie clearly below the differential protection (**I-DIFF>**, address 1221); otherwise no differentiation between operational errors caused by missing secondary currents and fault currents due to short-circuit in the protected object would be possible. The pickup value is referred to the rated current of the protected object. Time delay **T I-DIFF> MON.** (address 1282) applies to the annunciation and blocking of the differential protection. This setting ensures that blocking with the presence of faults (even of external ones) is avoided. The time delay usually amounts to a few seconds.

Feeder Current Guard

With busbars and short lines a release of the trip command can be set if one of the incoming currents is exceeded. The differential protection only trips if one of the measured currents exceeds the threshold **I> CURR. GUARD** (address 1210). The pickup value is referred to the rated current of the respective side. With setting 0.00 I/InS (presetting) this release criterion will not be used.

If the feeder current guard is set (i. e. to a value of > 0), the differential protection will not trip before the release criterion is given. This is also the case if, in conjunction with very high differential currents, the extremely fast instantaneous value scheme has detected the fault already after a few milliseconds.

Trip Characteristic Differential Current

The parameters of the tripping characteristic are set in addresses 1221 to 1265. Figure 2-49 illustrates the meaning of the different settings. The numbers at the different branches of the characteristic signify the addresses of the settings.

I-DIFF> (address 1221) is the pickup value of the differential current. This is the total fault current into the protected object, regardless of the way this is distributed between the sides. The pickup value is referred to the rated current of the protected object. You may select a high sensitivity (small pickup value) for transformers (presetting $0.2 \cdot I_{N\,Obj}$). With reactors, generators and motors the sensitivity can be set even higher, provided that the current transformer sets are of similar design. A higher value (above rated current) should be selected for lines and busbars. Higher measuring tolerances must be expected if the rated currents of the current transformers differ extensively from the rated current of the protected object, or if there are multiple measuring locations.

$$\frac{1}{u_{sc\ transf}} \cdot I_{Ntransf}$$

In case of busbars and short lines, the through-flowing current can increase substantially, depending on the system. The unstable **I-DIFF>>** stage could trip. In such cases **I-DIFF>>** should be set to ∞.

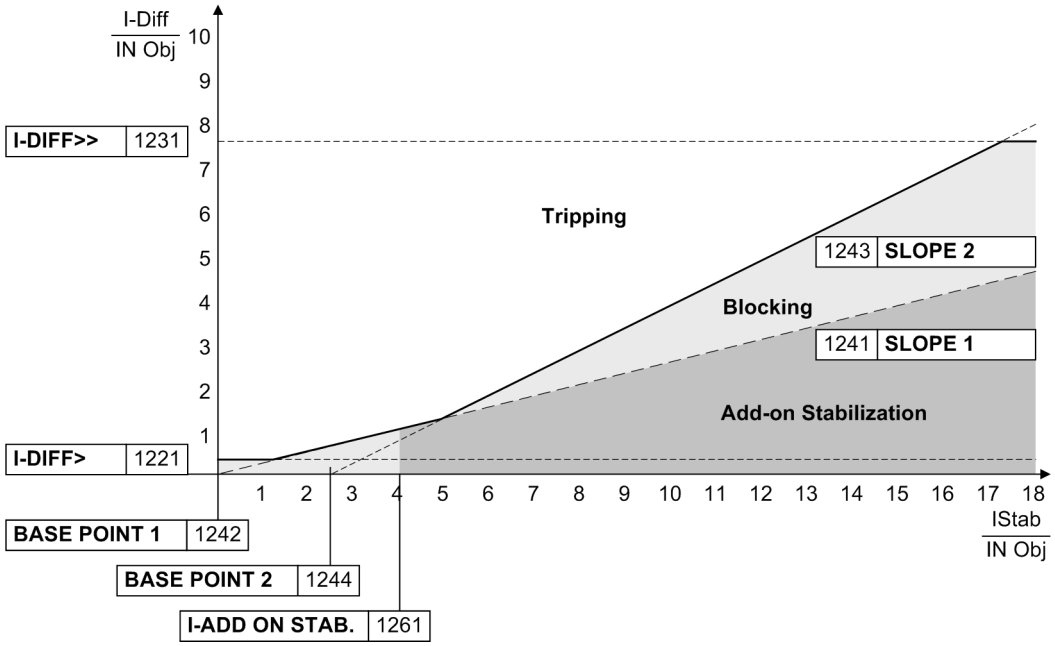

Figure 2-49 Tripping characteristic of the differential protection

The tripping characteristic comprises two further branches. The base point of the first branch is determined by address 1242 **BASE POINT 1** and its slope by address 1241 **SLOPE 1**. This parameter can only be set with DIGSI under **Additional Settings**. This branch covers current-proportional errors. These are mainly errors of the main current transformers and, in case of power transformers with tap changers, differential currents which occur due to the transformer regulating range.

The percentage of this differential current in this latter case is equal to the percentage of the regulating range provided the rated voltage is corrected according to the description of the 2.1.4 in „Object Data with Transformers“.

The second branch produces a higher restraint in the range of high currents which may lead to current transformer saturation. Its base point is set at address 1244 **BASE POINT 2** and is referred to the rated object current. The slope is set at address 1243 **SLOPE 2**. The restraint during current transformer saturation can be influenced by this parameter branch. A higher gradient results in a higher restraint. This parameter can only be set with DIGSI at **Additional Settings**.

Delay Times

In special cases it may be advantageous to delay the trip signal of the differential protection. For this, an additional delay can be set. The delay time1226 **T I-DIFF>** is started if an internal fault in the protected object has been detected by the $I_{DIFF}>$-stage and the trip characteristic. 1236 **T I-DIFF>>** is the time delay for the tripping stage **I-DIFF>>**. This parameter can only be set with DIGSI at **Additional Settings**. The dropout time of all stages is determined by the minimum trip time duration of all protection functions.

All setting times are additional delay times which do not include the operating times (measuring time, dropout time) of the protective function.

The increase of the pickup value on startup

The increase of the pickup value on startup serves as an additional safety against overfunctioning when a non-energised protection object is connected. At address 1205 **INC.CHAR.START** it can be switched to ***ON*** or ***OFF***. Especially for motors or motor/transformer units in block connection it should be set to ***ON***.

The restraint current value **I-REST. STARTUP** (address 1251) is the value of the restraining current which is likely to be undershot before startup of the protected object takes place. This parameter can only be set with DIGSI at **Additional Settings**. Please be aware of the fact that the restraint current is twice the traversing operational current. The pre-set value of 0.1 represents 0.05 times the rated current of the protected object.

Address 1252 **START-FACTOR** determines by which factor the pickup value of the $_{\text{Diff>}}$ stage is to be increased on startup. The characteristic of this stage increases by the same factor. The $I_{Diff>>}$ stage is not affected. For motors or motor/transformer in unit connection, a value of ***2*** is normally adequate. This parameter can only be set with DIGSI under **Additional Settings**.

The increase of the pickup value is set back to its original value after time period **T START MAX** (address 1253) has passed.

Add-on Restraint

In systems with very high traversing currents a dynamic add-on restraint is enabled for external faults. The initial value is set at address 1261 **I-ADD ON STAB.**. The value is referred to the rated current of the protected object. The slope is the same as for characteristic branch **b** (**SLOPE 1**, address 1241). This parameter can only be set with DIGSI at **Additional Settings**. Please note that the fact that the restraint current is the arithmetical sum of the currents flowing into the protected object, i.e. it is twice the traversing current. The additional stabilisation does not influence the stage **I-DIFF>>**.

The maximum duration of the add-on restraint after detection of an external fault is set to multiples of an AC-cycle (address 1262 **T ADD ON-STAB.**). This parameter can only be set with DIGSI at **Additional Settings**. The add-on restraint is disabled automatically even before the set time period expires as soon as the device has detected that the operation pointI_{diff}/I_{stab} stationary (i.e. via at least one cycle) within the tripping zone near the fault characteristic ($\geq$ 80 % of the fault characteristic slope).

Add-on restraint operates individually per phase, but blocking can be extended to all three phases (so-called crossblock function). By means of address 1263 **CROSSB. ADD ON** it can be determined how long the crossblock should be effective. This parameter can only be set with DIGSI at **Additional Settings**. Here, too, setting is in multiple of one AC-cycle. If **0 Per.** cycle is set, crossblock is ineffective, i.e. only the phase with detected external fault will be blocked. Otherwise all phases will be blocked. in this case the same setting as for 1262 **T ADD ON-STAB.** is advisable. When set to ∞, the crossblock function is always effective.

Harmonic Restraint

Restraint with harmonic content is available only when the device is used as transformer protection, i.e. the **PROT. OBJECT** (address 105) is a ***3 phase transf.*** or ***1 phase transf.*** or ***Autotransf.*** or ***Autotr. node***. This function is also used for shunt reactors if current transformers are installed at both sides of the connection points.

The inrush restraint function with 2nd harmonic can be switched in address 1206 **INRUSH 2.HARM.** ***OFF*** and ***ON***. It is based on evaluation of the 2nd harmonic present in the switch-on inrush current. The ratio of 2nd harmonics to the fundamental (address 1271, **2. HARMONIC**) is set to I_{2fN}/I_{fN} = 15 % as default setting. It can be used without being changed. To provide more restraint in exceptional cases, where energising conditions are particularly unfavourable, a smaller value can be set at the afore-

mentioned address. The restraint with harmonics does not influence the stage **I-DIFF>>**.

The inrush restraint can be extended by the so-called "crossblock" function. This means that on harmonic content overshoot in only one phase all three phases of the differential stage $I_{DIFF>}$ stage are blocked. The duration for which the crossblock function is active can be limited at address 1272 **CROSSB. 2. HARM**. Setting is in multiple of the AC-cycle. This parameter can only be set with DIGSI at **Additional Settings**. If set to ***0*** (pre-setting is ***3***) the protection can trip when the transformer is switched on a single-phase fault even while the other phases carry inrush current. If set to ∞ the crossblock function remains effective for as long as high-order harmonics are detected in any phase.

Apart from the second harmonic, the 7UT613/63x can provide restraint with a further harmonic. Address 1207 **RESTR. n.HARM.** is used to disable this harmonics restraint, or to select the harmonic for it. Available for selection are the ***3. Harmonic*** and the ***5. Harmonic***.

Steady-state overexcitation of transformers is characterised by odd harmonic content. The 3rd or 5th harmonic is suitable to detect overexcitation. As the third harmonic is often eliminated in transformers (e.g. in a delta winding), the fifth harmonic is more commonly used.

Converter transformers also produce odd harmonics which are practically absent in the case of an internal short-circuit.

The harmonic content intended for blocking the differential protection is set at address 1276 **n. HARMONIC**. For example, if the 5th harmonic restraint is used to avoid trip during overexcitation, 30 % (default setting) are convenient.

Harmonic restraint with the n-th harmonic operates individually per phase. However, it is also possible – as it is for the inrush restraint – to set the protection in such manner that not only the phase with harmonic content overshoot but also the other phases of the differential stage **I-DIFF>** are blocked (so-called "crossblock" function). The duration for which the crossblock function is active can be limited at address 1277 **CROSSB. n.HARM**. Setting is in multiple of the AC-cycle. This parameter can only be set with DIGSI at **Additional Settings**. If set to ***0*** the crossblock function remains effective for as long as high-order harmonics are detected in any phase. When set to ∞, the crossblock function is always active. .

If the differential current exceeds the magnitude set at address 1278 **IDIFFmax n.HM** no n-th harmonic restraint takes place. This parameter can only be altered in DIGSI at **Display Additional Settings**.



Note

The current values I/I_{NO} in the settings overview below always refer to the rated current of the main protected object. The current values I/I_{NS} always refer to the rated current of the relevant side of the main protected object.

2.2.8 Settings

Addresses which have an appended "A" can only be changed with DIGSI, under Additional Settings.

Addr.	Parameter	Setting Options	Default Setting	Comments
1201	DIFF. PROT.	OFF ON Block relay	OFF	Differential Protection
1205	INC.CHAR.START	OFF ON	OFF	Increase of Trip Char. During Start
1206	INRUSH 2.HARM.	OFF ON	ON	Inrush with 2. Harmonic Restraint
1207	RESTR. n.HARM.	OFF 3. Harmonic 5. Harmonic	OFF	n-th Harmonic Restraint
1208	I-DIFF> MON.	OFF ON	ON	Differential Current monitoring
1210	I> CURR. GUARD	0.20 .. 2.00 I/InS; 0	0.00 I/InS	I> for Current Guard
1211A	DIFFw.IE1-MEAS	NO YES	NO	Diff-Prot. with meas. Earth Current S1
1212A	DIFFw.IE2-MEAS	NO YES	NO	Diff-Prot. with meas. Earth Current S2
1213A	DIFFw.IE3-MEAS	NO YES	NO	Diff-Prot. with meas. Earth Current S3
1214A	DIFFw.IE4-MEAS	NO YES	NO	Diff-Prot. with meas. Earth Current S4
1215A	DIFFw.IE5-MEAS	NO YES	NO	Diff-Prot. with meas. Earth Current S5
1216A	DIFFw.IE3phMEAS	NO YES	NO	Diff-Prot.with meas.current earth.electr
1221	I-DIFF>	0.05 .. 2.00 I/InO	0.20 I/InO	Pickup Value of Differential Curr.
1226A	T I-DIFF>	0.00 .. 60.00 sec; ∞	0.00 sec	T I-DIFF> Time Delay
1231	I-DIFF>>	0.5 .. 35.0 I/InO; ∞	7.5 I/InO	Pickup Value of High Set Trip
1236A	T I-DIFF>>	0.00 .. 60.00 sec; ∞	0.00 sec	T I-DIFF>> Time Delay
1241A	SLOPE 1	0.10 .. 0.50	0.25	Slope 1 of Tripping Characteristic
1242A	BASE POINT 1	0.00 .. 2.00 I/InO	0.00 I/InO	Base Point for Slope 1 of Charac.
1243A	SLOPE 2	0.25 .. 0.95	0.50	Slope 2 of Tripping Characteristic
1244A	BASE POINT 2	0.00 .. 10.00 I/InO	2.50 I/InO	Base Point for Slope 2 of Charac.
1251A	I-REST. STARTUP	0.00 .. 2.00 I/InO	0.10 I/InO	I-RESTRAINT for Start Detection
1252A	START-FACTOR	1.0 .. 2.0	1.0	Factor for Increasing of Char. at Start
1253	T START MAX	0.0 .. 180.0 sec	5.0 sec	Maximum Permissible Starting Time
1261A	I-ADD ON STAB.	2.00 .. 15.00 I/InO	4.00 I/InO	Pickup for Add-on Stabilization
1262A	T ADD ON-STAB.	2 .. 250 Cycle; ∞	15 Cycle	Duration of Add-on Stabilization
1263A	CROSSB. ADD ON	2 .. 1000 Cycle; 0; ∞	15 Cycle	Time for Cross-blocking Add-on Stabiliz.

Addr.	Parameter	Setting Options	Default Setting	Comments
1271	2. HARMONIC	10 .. 80 %	15 %	2nd Harmonic Content in I-DIFF
1272A	CROSSB. 2. HARM	2 .. 1000 Cycle; 0; ∞	3 Cycle	Time for Cross-blocking 2nd Harm.
1276	n. HARMONIC	10 .. 80 %	30 %	n-th Harmonic Content in I-DIFF
1277A	CROSSB. n.HARM	2 .. 1000 Cycle; 0; ∞	0 Cycle	Time for Cross-blocking n-th Harm.
1278A	IDIFFmax n.HM	0.5 .. 20.0 I/InO	1.5 I/InO	Limit IDIFFmax of n-th Harm.Restraint
1281	I-DIFF> MON.	0.15 .. 0.80 I/InO	0.20 I/InO	Pickup Value of diff. Current Monitoring
1282	T I-DIFF> MON.	1 .. 10 sec	2 sec	T I-DIFF> Monitoring Time Delay

2.2.9 Information List

No.	Information	Type of In-formation	Comments
5603	>Diff BLOCK	SP	>BLOCK differential protection
5615	Diff OFF	OUT	Differential protection is switched OFF
5616	Diff BLOCKED	OUT	Differential protection is BLOCKED
5617	Diff ACTIVE	OUT	Differential protection is ACTIVE
5620	Diff Adap.fact.	OUT	Diff err.: adverse Adaption factor CT
5631	Diff picked up	OUT	Differential protection picked up
5644	Diff 2.Harm L1	OUT	Diff: Blocked by 2.Harmon. L1
5645	Diff 2.Harm L2	OUT	Diff: Blocked by 2.Harmon. L2
5646	Diff 2.Harm L3	OUT	Diff: Blocked by 2.Harmon. L3
5647	Diff n.Harm L1	OUT	Diff: Blocked by n.Harmon. L1
5648	Diff n.Harm L2	OUT	Diff: Blocked by n.Harmon. L2
5649	Diff n.Harm L3	OUT	Diff: Blocked by n.Harmon. L3
5651	Diff Bl. exF.L1	OUT	Diff. prot.: Blocked by ext. fault L1
5652	Diff Bl. exF.L2	OUT	Diff. prot.: Blocked by ext. fault L2
5653	Diff Bl. exF.L3	OUT	Diff. prot.: Blocked by ext. fault.L3
5657	DiffCrosBlk 2HM	OUT	Diff: Crossblock by 2.Harmonic
5658	DiffCrosBlk nHM	OUT	Diff: Crossblock by n.Harmonic
5660	DiffCrosBlk exF	OUT	Diff: Crossblock by ext. fault
5662	Block Iflt.L1	OUT	Diff. prot.: Blocked by CT fault L1
5663	Block Iflt.L2	OUT	Diff. prot.: Blocked by CT fault L2
5664	Block Iflt.L3	OUT	Diff. prot.: Blocked by CT fault L3
5666	DiffStrtInChaL1	OUT	Diff: Increase of char. phase (start) L1
5667	DiffStrtInChaL2	OUT	Diff: Increase of char. phase (start) L2
5668	DiffStrtInChaL3	OUT	Diff: Increase of char. phase (start) L3
5670	Diff I-Release	OUT	Diff: Curr-Release for Trip
5671	Diff TRIP	OUT	Differential protection TRIP
5672	Diff TRIP L1	OUT	Differential protection: TRIP L1
5673	Diff TRIP L2	OUT	Differential protection: TRIP L2
5674	Diff TRIP L3	OUT	Differential protection: TRIP L3
5681	Diff> L1	OUT	Diff. prot.: IDIFF> L1 (without Tdelay)
5682	Diff> L2	OUT	Diff. prot.: IDIFF> L2 (without Tdelay)
5683	Diff> L3	OUT	Diff. prot.: IDIFF> L3 (without Tdelay)

No.	Information	Type of Information	Comments
5684	Diff>> L1	OUT	Diff. prot: IDIFF>> L1 (without Tdelay)
5685	Diff>> L2	OUT	Diff. prot: IDIFF>> L2 (without Tdelay)
5686	Diff>> L3	OUT	Diff. prot: IDIFF>> L3 (without Tdelay)
5691	Diff> TRIP	OUT	Differential prot.: TRIP by IDIFF>
5692	Diff>> TRIP	OUT	Differential prot.: TRIP by IDIFF>>
5701	Diff L1:	VI	Diff. curr. in L1 at trip without Tdelay
5702	Diff L2:	VI	Diff. curr. in L2 at trip without Tdelay
5703	Diff L3:	VI	Diff. curr. in L3 at trip without Tdelay
5704	Res. L1:	VI	Restr.curr. in L1 at trip without Tdelay
5705	Res. L2:	VI	Restr.curr. in L2 at trip without Tdelay
5706	Res. L3:	VI	Restr.curr. in L3 at trip without Tdelay
5721	Diff CT-I1:	VI	Diff. prot: Adaption factor CT I1
5722	Diff CT-I2:	VI	Diff. prot: Adaption factor CT I2
5723	Diff CT-I3:	VI	Diff. prot: Adaption factor CT I3
5724	Diff CT-I4:	VI	Diff. prot: Adaption factor CT I4
5725	Diff CT-I5:	VI	Diff. prot: Adaption factor CT I5
5726	Diff CT-I6:	VI	Diff. prot: Adaption factor CT I6
5727	Diff CT-I7:	VI	Diff. prot: Adaption factor CT I7
5728	Diff CT-I8:	VI	Diff. prot: Adaption factor CT I8
5729	Diff CT-I9:	VI	Diff. prot: Adaption factor CT I9
5730	DiffCT-I10:	VI	Diff. prot: Adaption factor CT I10
5731	DiffCT-I11:	VI	Diff. prot: Adaption factor CT I11
5732	DiffCT-I12:	VI	Diff. prot: Adaption factor CT I12
5733	Diff CT-M1:	VI	Diff. prot: Adaption factor CT M1
5734	Diff CT-M2:	VI	Diff. prot: Adaption factor CT M2
5735	Diff CT-M3:	VI	Diff. prot: Adaption factor CT M3
5736	Diff CT-M4:	VI	Diff. prot: Adaption factor CT M4
5737	Diff CT-M5:	VI	Diff. prot: Adaption factor CT M5
5738	Diff CT-IX1:	VI	Diff. prot: Adaption factor aux. CT IX1
5739	Diff CT-IX2:	VI	Diff. prot: Adaption factor aux. CT IX2
5740	Diff CT-IX3:	VI	Diff. prot: Adaption factor aux. CT IX3
5741	Diff CT-IX4:	VI	Diff. prot: Adaption factor aux. CT IX4
5742	Diff DC L1	OUT	Diff: DC L1
5743	Diff DC L2	OUT	Diff: DC L2
5744	Diff DC L3	OUT	Diff: DC L3
5745	Diff DC InCha	OUT	Diff: Increase of char. phase (DC)

2.3 Restricted Earth Fault Protection

The restricted earth fault protection detects earth faults in power transformers, shunt reactors, neutral earthing transformers/reactors, or rotating machines, the starpoint of which is led to earth. It is also suitable when a starpoint former is installed within a protected zone of a non-earthed power transformer. A precondition is that a current transformer is installed in the starpoint connection, i.e. between the starpoint and the earthing electrode. The starpoint CT and the phase CTs define the limits of the protected zone exactly. Restricted earth fault protection is not applicable to busbars.

7UT613/63x provides a second earth fault differential protection. The following function description refers to the 1st instance (address 13xx). The 2nd instance is set via addresses 14xx.

2.3.1 Application Examples

Examples are illustrated in the Figures 2-50 to 2-56.

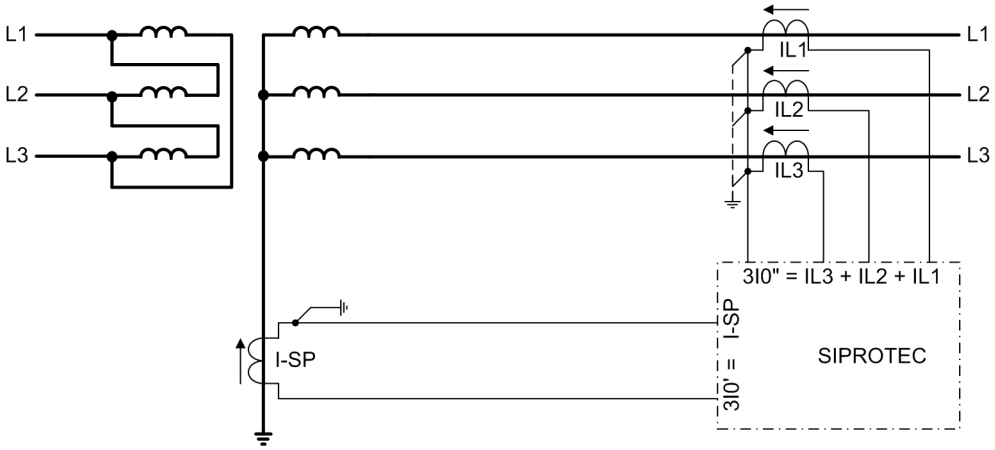

Figure 2-50 Restricted earth fault protection on an earthed transformer winding

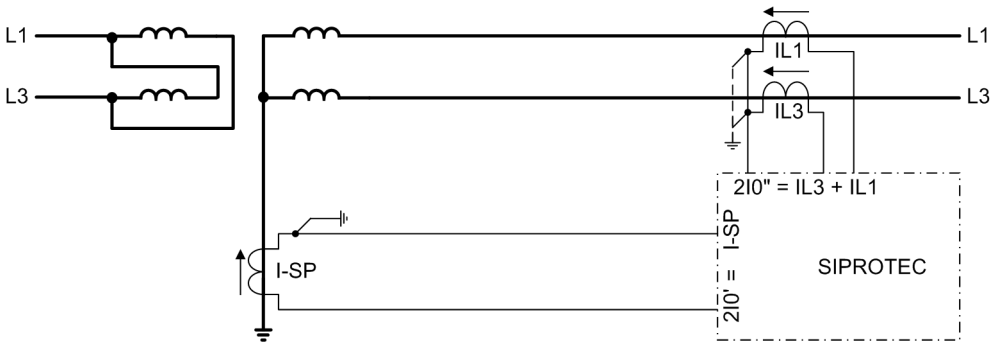

Figure 2-51 Restricted earth fault protection on an earthed winding of a single-phase power transformer

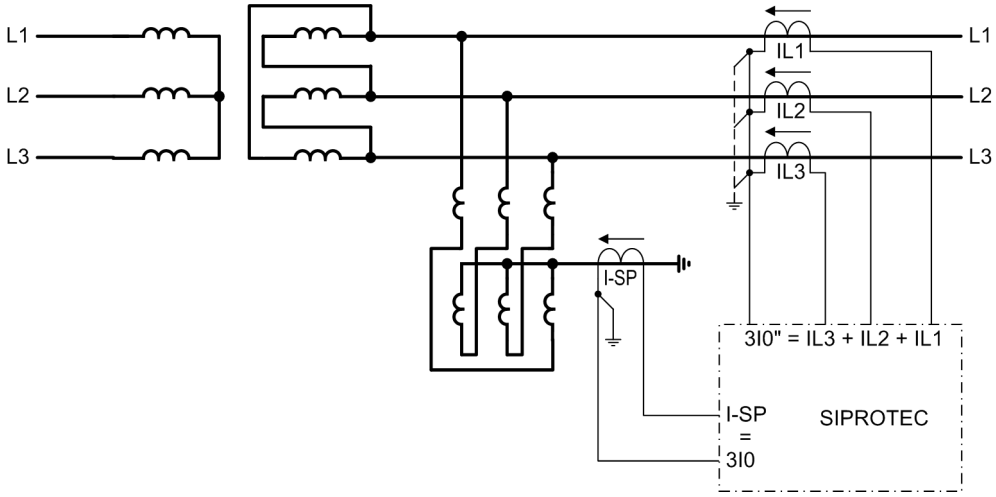

Figure 2-52 Restricted earth fault protection on a non-earthed transformer winding with neutral reactor (starpoint former) within the protected zone

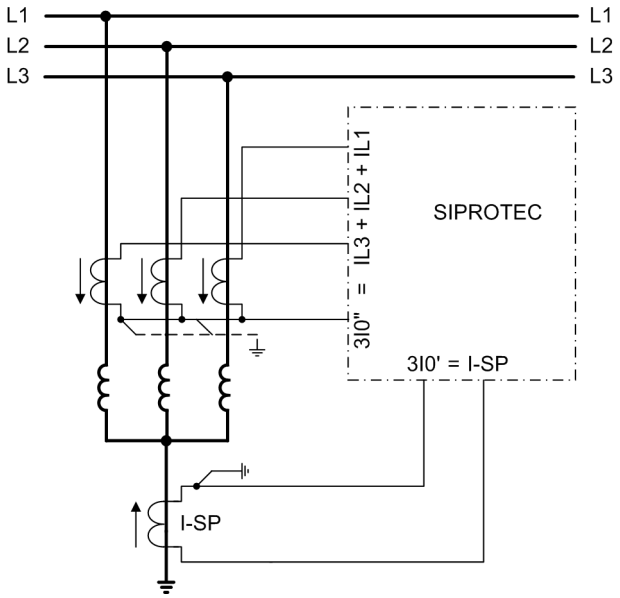

Figure 2-53 Restricted earth fault protection on an earthed shunt reactor with CTs in the reactor leads

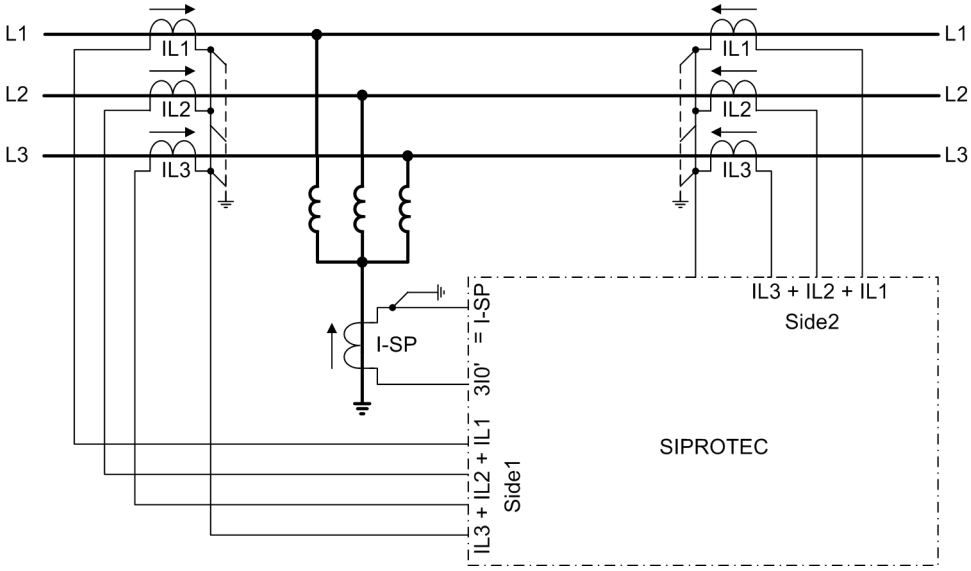

Figure 2-54 Restricted earth fault protection on an earthed shunt reactor with 2 CT sets (treated like an auto-transformer)

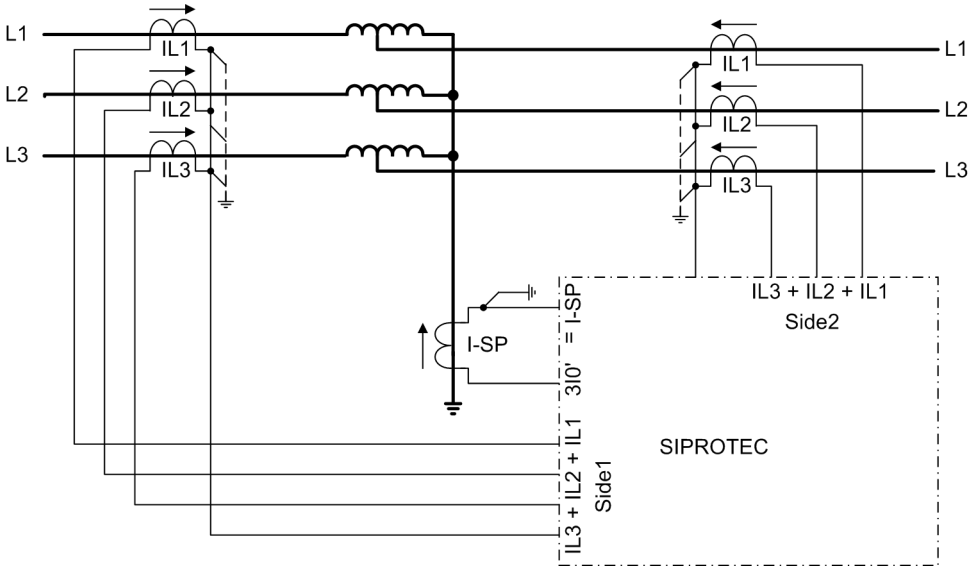

Figure 2-55 Restricted earth fault protection on an earthed auto-transformer

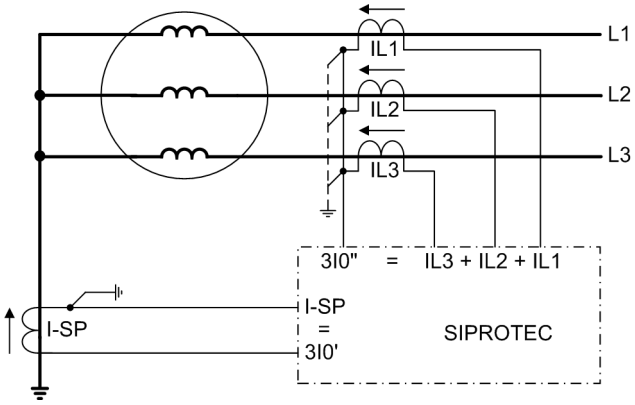

Figure 2-56 Restricted earth fault protection on a generator or motor with earthed starpoint

The restricted earth fault protection can operate on one of the sides of the main protected object (power transformer, generator, motor, reactor) or on a further protected object, according to the topology configured. In case of auto-transformers, it is assigned to the auto-windings. Furthermore, it is presumed that the assignment of the different measuring locations to the sides of the main protected object or to a further protected object as well as the assignment of the 1-phase current input for the starpoint current has been performed correctly according to the Subsection „Topology of the Protected Object“.

The 7UT613/63x is equipped with two such protective functions that can be used independent of each other and at various locations. You can, for example, implement an earth fault differential protection for both of the windings at a YNyn transformer that is earthed at both starpoints. Or use the first earth fault differential protection for an earthed transformer winding and the second for a further protective object, e.g. a neutral reactor. Allocation of both earth fault differential protection functions to the sides or measuring locations are done according to Section „Assignment of protection functions to measuring locations.sides“are performed.

2.3.2 Function Description

Measuring Principle

During healthy operation, no starpoint current $\underline{I}_{Ctrl}$ flows through the starpoint lead. The sum of the phase currents $3I_0 = \underline{I}_{L1} + \underline{I}_{L2} + \underline{I}_{L3}$ is almost zero.

When an earth fault occurs in the protected zone, a starpoint current $\underline{I}_{Ctrl}$ will flow; depending on the earthing conditions of the power system a further earth current may be recognised in the residual current path of the phase current transformers (dashed arrow in Figure 2-57), which is, however, more or less in phase with the starpoint current. All currents which flow into the protected zone are defined positive.

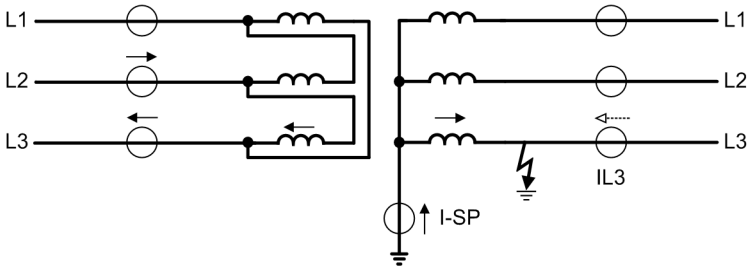

Figure 2-57 Example for an earth fault in a transformer with current distribution

When an earth fault occurs outside the protected zone (Figure 2-58), a starpoint current $\underline{I}_{Ctrl}$ will flow equally; but an equal current 3 $\underline{I}_0$ must flow through the phase current transformers. Since the current direction is normally defined as positive in the direction of the protected object, this current is in phase opposition with $\underline{I}_{Ctrl}$.

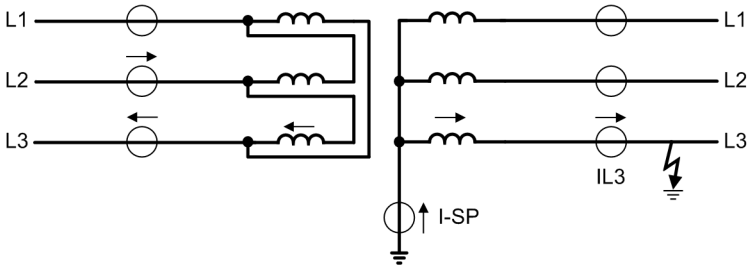

Figure 2-58 Example for an earth fault outside a transformer with current distribution

When a fault without earth connection occurs outside the protected zone, a residual current may occur in the residual current path of the phase current transformers which is caused by different saturation of the phase current transformers under strong through-current conditions. This current could simulate a fault in the protected zone. Measures must be taken to prevent this current from causing a trip. For this, the restricted earth fault protection provides stabilisation methods which differ strongly from the usual stabilisation methods of differential protection schemes since it uses, besides the magnitude of the measured currents, the phase relationship, too.

Evaluation of Measurement Quantities

The earth fault differential protection compares the fundamental wave of the current flowing in the starpoint connection, which is designated as $3\underline{I}_0$' in the following, with the fundamental wave of the sum of the phase currents, which should be designated in the following as $3\underline{I}_0$". Thus, the following applies (Figure 2-59):

$3\underline{I}_0' = \underline{I}_{Ctrl}$

$3\underline{I}_0'' = \underline{I}_{L1} + \underline{I}_{L2} + \underline{I}_{L3}$

Only $3\underline{I}_0$' acts as the tripping effect quantity. During a fault within the protected zone this current is always present.

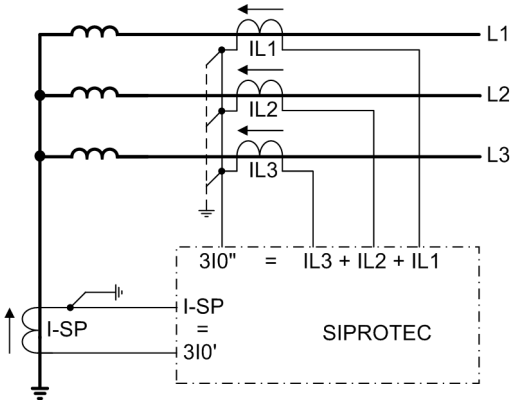

Figure 2-59 Principle of Restricted Earth Fault Protection

For auto-transformers $3\underline{I}_0$" is valid as the sum of all phase currents flowing to auto-connected winding (full winding and tap(s)).

When an earth fault occurs outside the protected zone, another earth currents flows through the phase current transformers. This is, on the primary side, in counter-phase with the starpoint current and has equal magnitude. The maximum information of the currents is evaluated for restraint: the magnitude of the currents and their phase position. The following is defined:

a tripping effect current

$$I_{from} = |3\underline{I}_0'|$$

and the stabilisation or restraining current

$$I_{stab} = k \cdot (|3\underline{I}_0 ' - 3\underline{I}_0"| - |3\underline{I}_0' + 3\underline{I}_0"|)$$

k is a stabilisation factor which will be explained below, at first we assume k = 1. I_{from} produces the tripping effect quantity, I_{stab} counteracts this effect.

To clarify the situation, three important operating conditions with ideal and matched measurement quantities are considered:

1. Through-fault current on an external earth fault:

   $3\underline{I}_0$" is in phase opposition with $3\underline{I}_0$' and of equal magnitude, i.e $3\underline{I}_0$" = $-3\underline{I}_0$'

   $I_{from} = |3\underline{I}_0'|$

   $I_{stab} = |3\underline{I}_0' + 3\underline{I}_0'| - |3\underline{I}_0' - 3\underline{I}_0'| = 2 \cdot |3\underline{I}_0'|$

   The tripping effect current (I_{from}) equals the starpoint current; the restraining quantity (I_{stab}) is double the size.

2. Internal earth fault, fed only from the starpoint

   In this case $3\underline{I}_0$" = 0

   $I_{from} = |3\underline{I}_0'|$

   $I_{stab} = |3\underline{I}_0' - 0| - |3\underline{I}_0' + 0| = 0$

   The tripping effect current (I_{from}) equals the starpoint current, the restraining quantity (I_{stab}) is zero, i.e. full sensitivity during internal earth fault.

3. Internal earth fault, fed from the starpoint and from the system, e.g. with equal earth current magnitude:

   In this case $3\underline{I}_0$" = $3\underline{I}_0$'

   $I_{from} = |3\underline{I}_0'|$

   $I_{stab} = |3\underline{I}_0' - 3I_0'| - |3\underline{I}_0' + 3\underline{I}_0'| = -2 \cdot |3\underline{I}_0'|$

   The tripping effect (I_{REF}) equals the starpoint current; the restraining quantity (I_{stab}) is negative and therefore set to zero, i.e. full sensitivity during internal earth fault.

This result shows that for an internal fault no restraint is effective since the restraining quantity is either zero or negative. Thus, small earth current can cause tripping. In contrast, strong restraint becomes effective for external earth faults. Figure 2-60 shows that the restraint is the strongest when the residual current from the phase current transformers is high (area with negative $3I_0$"/$3I_0$'). With ideal current transformers, $3I_0$" and $3I_0$' opposite and equal, i.e. $3I_0$"/$3I_{'0}$ = –1.

If the starpoint current transformer is designed weaker than the phase current transformers (e.g. by selection of a smaller accuracy limit factor or by higher secondary burden), no trip will be possible under through-fault condition even in case of severe saturation as the magnitude of $3I_0$" (negative) is always higher than that of $3I_0$'.

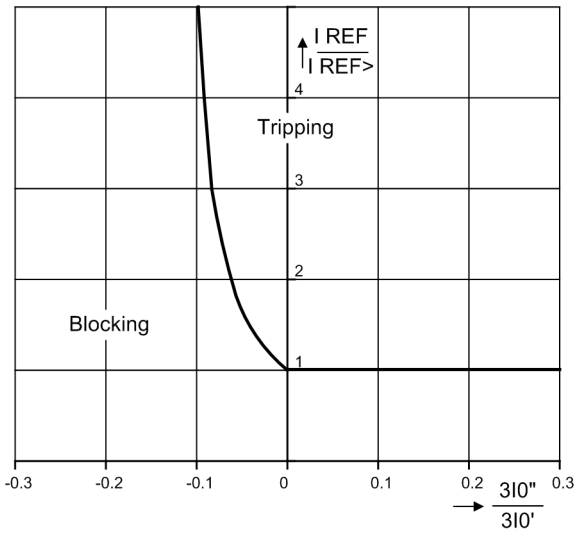

Figure 2-60 Tripping characteristic of the restricted earth fault protection depending on the earth current ratio $3I_0$"/$3I_0$' (both currents in phase + or counter-phase –); I_{REF}> = setting; I_{from} = tripping current

It was assumed in the above examples that the currents $3\underline{I}_0$" and $3\underline{I}_0$' are in counter-phase for external earth faults which is only true for the primary measured quantities. Current transformer saturation may cause phase shifting between the fundamental waves of the secondary currents which reduces the restraint quantity. If the phase displacement $\varphi(3\underline{I}_0"; 3\underline{I}_0') = 90°$ then the restraint quantity is zero. This corresponds to the conventional method of direction determination by use of the vectorial sum and difference comparison.

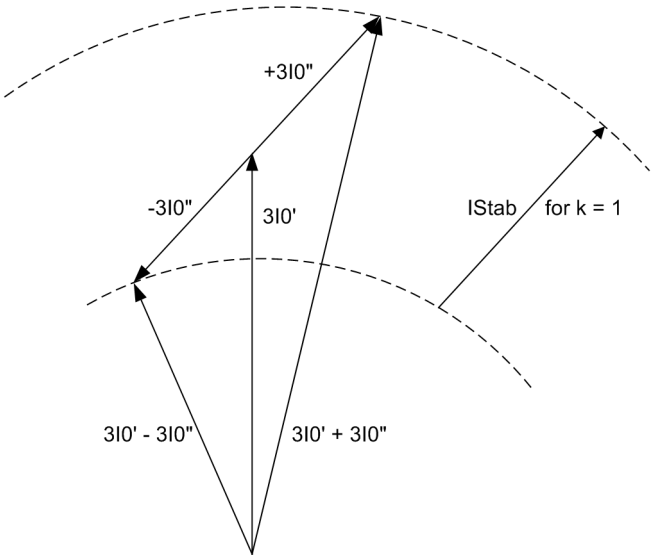

Figure 2-61 Phasor diagram of the restraint quantity during external fault

The restraint quantity can be influenced by means of a factor k. This factor has a certain relationship to the limit angle φ_{Limit}.

This limit angle determines for which phase displacement between $3\underline{I}_0$" and $3\underline{I}_0$' the pickup value for $3\underline{I}_0" = 3\underline{I}_0'$ grows to ∞, i.e. no pickup occurs. In 7UT613/63x k is equal to 4.

The restraint quantity I_{stab} in the above example a) is quadrupled once more; it becomes thus 8 times the tripping effect quantity I_{from}.

The limit angle is $\varphi_{Limit} = 100°$. That means no trip is possible for phase displacement $\varphi(3\underline{I}_0";°3\underline{I}_0')| \geq +100°$.

Figure 2-62 shows the operating characteristics of the restricted earth fault protection dependent of the phase displacement between $3\underline{I}_0$" and $3\underline{I}_0$', for a constant infeed ratio $|3\underline{I}_0"| = |3\underline{I}_0'|$.

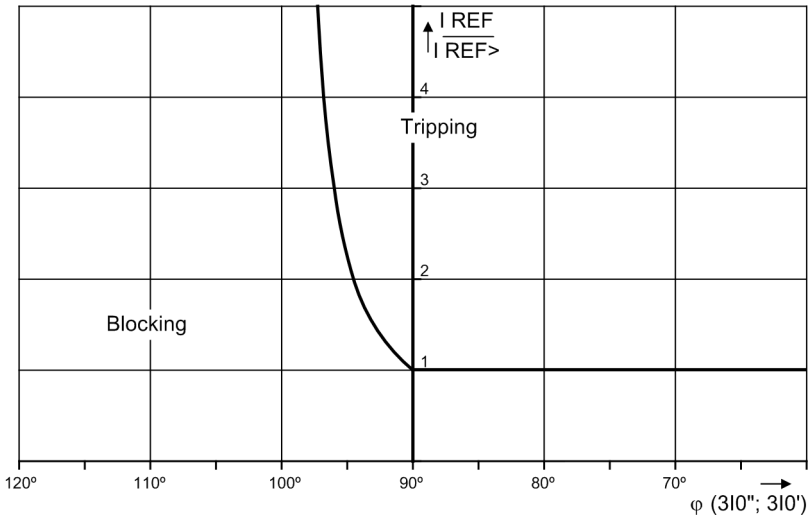

Figure 2-62 Tripping characteristic of the restricted earth fault protection depending on the phase angle between $3I_0$" and $3I_0$' at $3I_0$" = $3I_0$' (180° = external fault)

It is possible to increase the tripping value in the tripping area proportional to the arithmetic sum of all currents, i.e. with the sum of the magnitudes „`IrestREF=`“ i.e. „`IrestRE2=`“ $\Sigma | I | = | I_{L1} | + | I_{L2} | + | I_{L3} | + | I_Z |$ (Figure 2-63). The slope of this restraint characteristic can be set.

Pickup

Normally, a differential protection does not need a „pickup“, since the condition for a fault detection is identical to the trip condition. As with all protective functions the earth fault differential protection has a pickup that displays a precondition for tripping and defines the fault inception instant for a number or further activities.

As soon as the fundamental wave of the differential current exceeds 85 % of the pickup value, fault detection is indicated. In this aspect, the differential current is represented by the sum of all in-flowing currents.

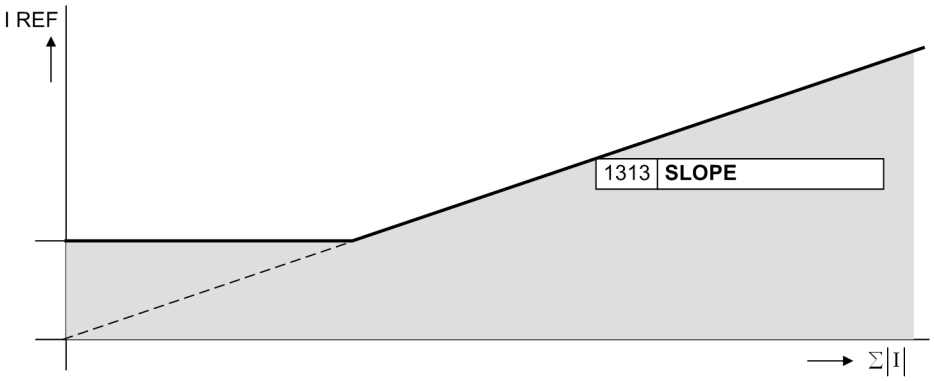

Figure 2-63 Increasing the Pickup Value

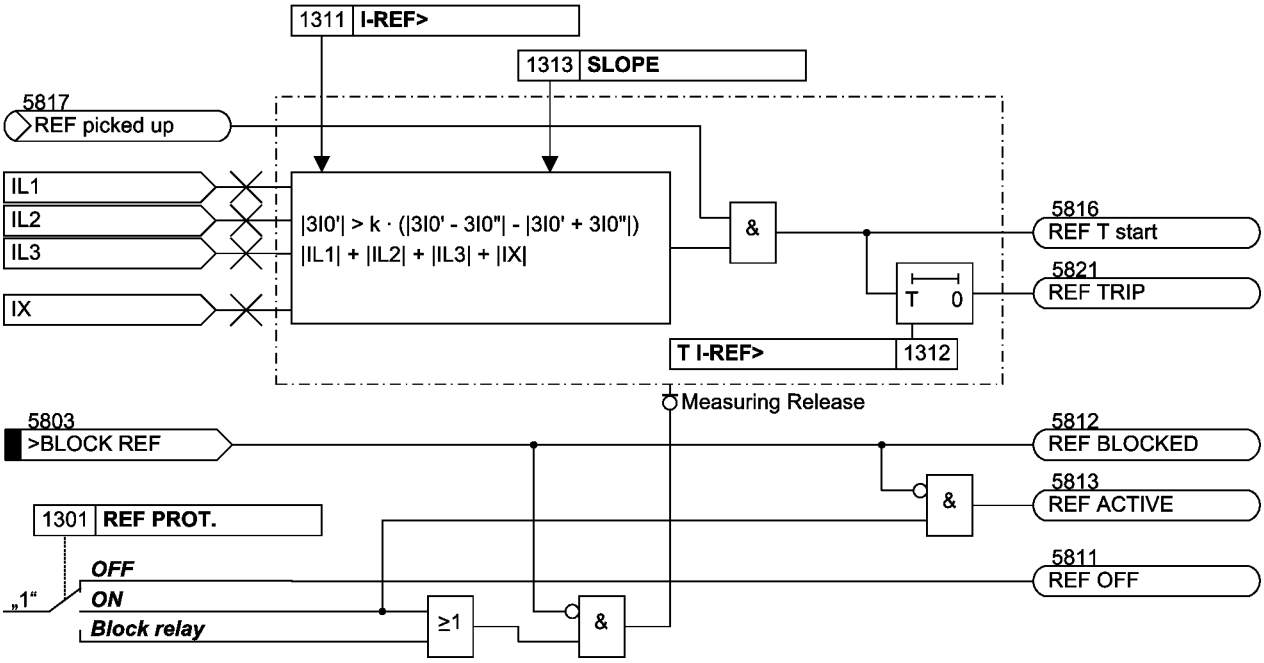

Figure 2-64 Logic diagram of the earth fault protection (simplified)

2.3.3 Setting Notes

General

Note

The first restricted earth fault protection is described in the setting instructions. The parameter addresses and message numbers of the second restricted earth fault protection are described at the end of the setting instructions under „Additional Restricted Earth Fault Protection Functions“.

The restricted earth fault protection can only operate if this function has been set during configuration of the functional scope (section 2.1.4) under address 113 **REF PROT.** to ***Enabled***. If the second restricted earth fault protection is used, it also needs to be set at address 114**REF PROT. 2*Enabled***. Furthermore, a further 1-phase measured current input must be assigned to the same side or measuring location where the starpoint current is to be processed (see section 2.1.4, margin heading „Assignment of Auxiliary 1-phase Measuring Locations“). The restricted earth fault protection itself must have been assigned to this side or measuring location (see section 2.1.4, margin heading „Earth Fault Differential Protection“).

The first restricted earth fault protection can be set at address 1301 **REF PROT.** to enabled (***ON***) or disabled (***OFF***); when set to Block relay, the protection function operates but no trip command is issued. ***Block relay***).

Note

When delivered from factory, the restricted earth fault protection is switched OFF. The reason is that the protection must not be in operation unless at least the assigned side and CT polarity have been properly set before. Without proper settings, the device may show unexpected reactions (incl. tripping)!

The sensitivity of the protection is determined by **I-REF>** setting (address 1311). This is the earth fault current which flows through the starpoint lead of the protected object (transformer, generator, motor, shunt reactor). A further earth current which may be supplied from the network does not influence the sensitivity. The setting value refers to the rated current of the protected side of the main protected object or, in case of a further protected object, to the rated operation current of the corresponding measuring location.

Note

In case of large mismatching, the indication 199.2494

(EarthDiff.Fault: MatchFac I-CT. too lar/sml.) appears. The setting value should then be increased.

The set value can be increased in the tripping quadrant depending on the arithmetic sum of the currents (restraint by the sum of all current magnitudes) which is set at address1313 **SLOPE**. This parameter can only be set with DIGSI at **Additional Settings**. The preset value 0 is normally adequate.

In special cases it may be advantageous to delay the trip signal of the protection. This can be done by setting an additional delay time (address 1312 **T I-REF>**). This parameter can only be set with DIGSI at **Additional Settings**. This additional time delay is usually set to 0. This setting is a pure additional delay time which does not include the inherent operating time of the protection.

Additional Restricted Earth Fault Protection Functions

In the aforementioned description, the first restricted earth fault protection is described respectively. The differences in the parameter addresses and message numbers of the first and second restricted earth fault protection are illustrated in the following table. The positions marked by x are identical.

	Parameter addresses	Message no.
1. Restricted earth fault protection	13xx	199.xxxx(.01)
2. Restricted earth fault protection	14xx	205.xxxx(.01)

Note

In the following parameter overview the current values I/I_{NS} refer to the rated current of the side to be protected of the main protected object. If the restricted earth fault protection is not referred to the main protected object, the rated current of the 3-phase measuring location is the applicable reference value.

2.3.4 Settings

Addresses which have an appended "A" can only be changed with DIGSI, under Additional Settings.

Addr.	Parameter	Setting Options	Default Setting	Comments
1301	REF PROT.	OFF ON Block relay	OFF	Restricted Earth Fault Protection
1311	I-REF>	0.05 .. 2.00 I/InS	0.15 I/InS	Pick up value I REF>
1312A	T I-REF>	0.00 .. 60.00 sec; ∞	0.00 sec	T I-REF> Time Delay
1313A	SLOPE	0.00 .. 0.95	0.00	Slope of Charac. I-REF> = f(I-SUM)

2.3.5 Information List

No.	Information	Type of Information	Comments
199.2404	>BLOCK REF	SP	>BLOCK restricted earth fault prot.
199.2411	REF OFF	OUT	Restricted earth fault is switched OFF
199.2412	REF BLOCKED	OUT	Restricted earth fault is BLOCKED
199.2413	REF ACTIVE	OUT	Restricted earth fault is ACTIVE
199.2421	REF picked up	OUT	Restr. earth flt.: picked up
199.2451	REF TRIP	OUT	Restr. earth flt.: TRIP
199.2491	REF Not avail.	OUT	REF err.: Not available for this object
199.2492	REF Err CTstar	OUT	REF err.: No starpoint CT
199.2494	REF Adap.fact.	OUT	REF err.: adverse Adaption factor CT
199.2631	REF T start	OUT	Restr. earth flt.: Time delay started
199.2632	REF D:	VI	REF: Value D at trip (without Tdelay)
199.2633	REF S:	VI	REF: Value S at trip (without Tdelay)
199.2634	REF CT-M1:	VI	REF: Adaption factor CT M1
199.2635	REF CT-M2:	VI	REF: Adaption factor CT M2
199.2636	REF CT-M3:	VI	REF: Adaption factor CT M3
199.2637	REF CT-M4:	VI	REF: Adaption factor CT M4
199.2638	REF CT-M5:	VI	REF: Adaption factor CT M5
199.2639	REF CTstar:	VI	REF: Adaption factor CT starpnt. wind.

2.4 Time Overcurrent Protection for Phase and Residual Currents

The overcurrent protection is used as backup protection for the short-circuit protection of the main protected object and provides backup protection for external faults which are not promptly disconnected and thus may endanger the protected object. It can also be used as short-circuit protection for a further protected object if it has been assigned to corresponding measuring locations (see Subsection 2.1.4 in „Assignment of Protection Functions to Measuring Locations/Sides“ under „Further 3-phase Protection Functions“) and these are fed into the correct current transformer sets.

Time overcurrent protection for phase currents takes its currents from the side or measuring location to which it is assigned (address 420). Time overcurrent protection for residual current always uses the sum of the phase currents of that side or measuring location to which it is assigned (address 422). The side or measuring location for the phase currents may be different from that of the residual current.

If the main protected object is **PROT. OBJECT** = ***1ph Busbar*** (address 105), the time overcurrent protection is ineffective.

The time overcurrent protection provides two definite time stages (DT) and one inverse time stage (IT) for each the phase currents and the residual current. The latter may operate according to an IEC or an ANSI curve, or to a user defined curve.

7UT613/63x has three overcurrent protection functions for phase and residual currents where each can be used independent of each other at different locations. They can, e.g. be implemented independently on various sides of the main protection object or three-phase measuring locations. Assigning the different protective functions to the sides or one-phase measuring locations are according to Section „Assigning the protective functions to the measuring locations/sides “ is performed.

The pickup and trip messages of all levels, from all O/C phase functions are included in the group indications „Overcurrent PU“ and „OvercurrentTRIP“.

2.4.1 General

The time overcurrent protection provides two definite time stages and one inverse time stage for each of the phase currents and the residual current. The latter may operate according to an IEC or an ANSIuser requirements or a user defined characteristic.

2.4.1.1 Definite Time, Instantaneous Overcurrent Protection (UMZ)

The definite time stages (DT) for phase currents and the threefold zero sequence current (sum of the phase currents) are also available when an inverse time characteristic was configured in the definition of the scope of functions (address 120/130/132 and/or 122/134/136).

Pickup, Tripping

Two definite time stages are available for each the phase currents and the zero sequence current. For the I>>-stages each phase current and the zero sequence current are compared with the common pickup values **I>>** and **3I0>>** and are signalled when exceeded. After the user-defined time delays **T I>>** or **T 3I0>>** have elapsed, trip signals are issued that are also available for each stage. The reset value is approximately 95 % below the pickup value for settings above I_N. For lower values the dropout ratio is reduced in order to avoid intermittent pickup on currents near the pickup value (e.g. 90 % at $0.2 \cdot I_N$).

Figures 2-65 and 2-66 show the logic diagrams for the high-set stages **I>>** and **3I0>>**.

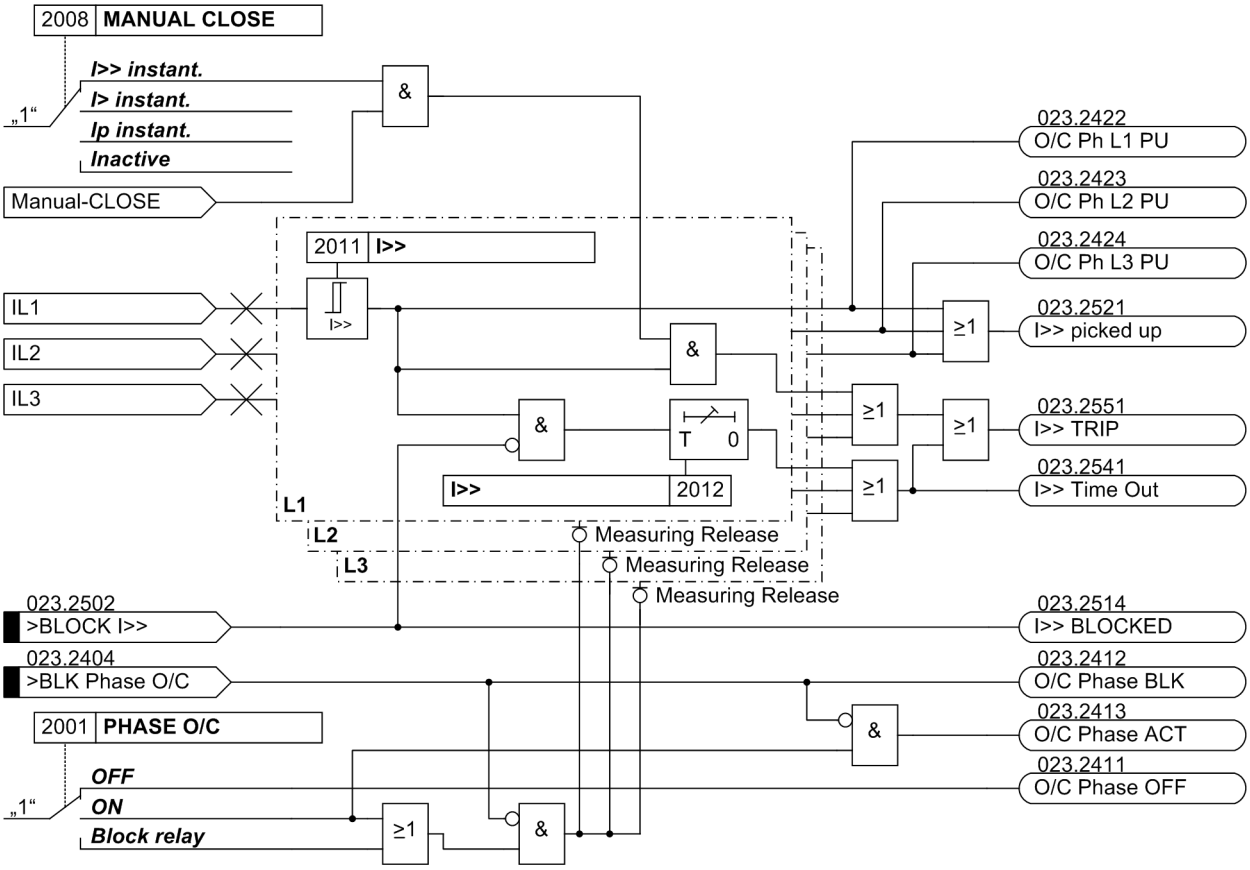

Figure 2-65 Logic diagram of the high-set stages I>> for phase currents (simplified)

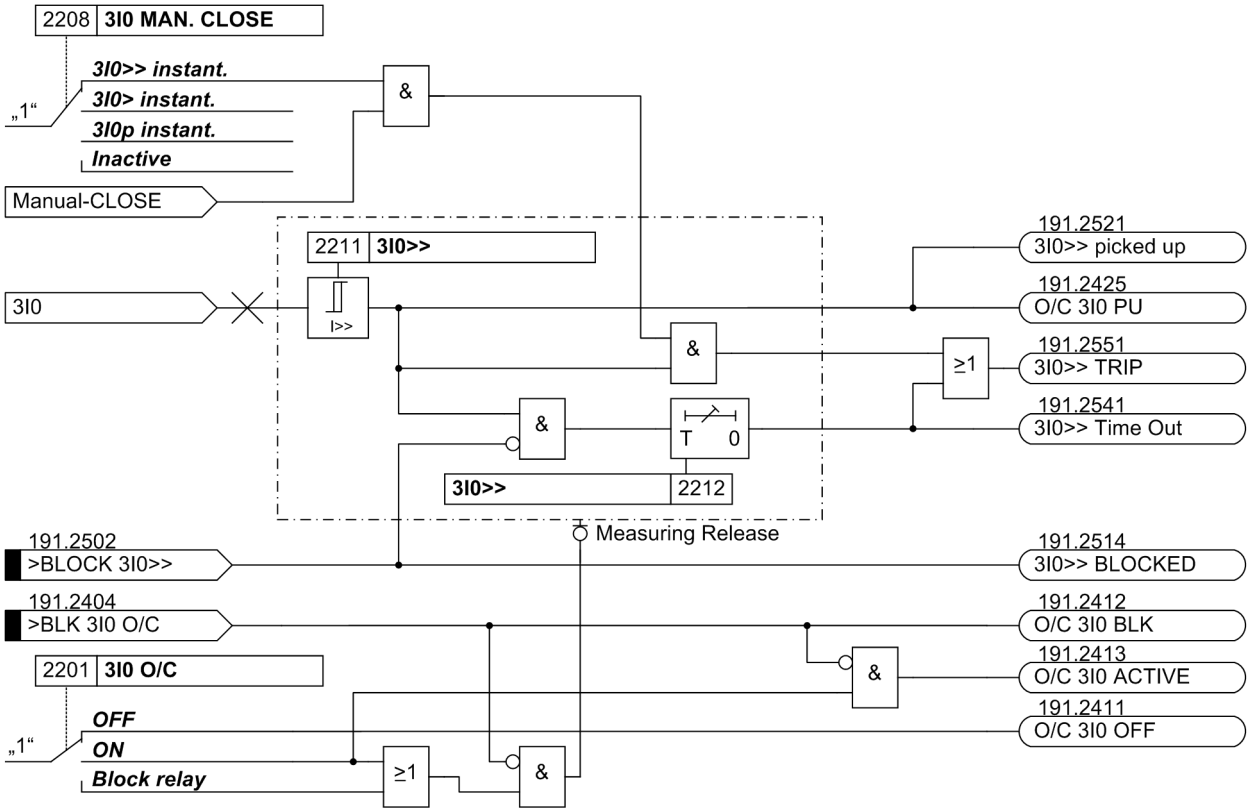

Figure 2-66 Logic diagram of the high-set stages I>> for residual current (simplified)

Each phase current and the zero sequence current 3·I0 are, additionally, compared with the setting value **I>** (common setting for the three phase currents) and **3I0>** (independent setting for 3·I0). If inrush restraint is used, a frequency analysis is performed first. Depending on the detection of inrush currents, either normal pickup annunciations or relevant inrush messages are issued. After user-configured delay times **T I>** or **T 3I0>** have elapsed, a trip signal is issued assuming that no inrush current is detected or inrush restraint is disabled. If inrush restraint is enabled and inrush current is detected, there will be no tripping. Nevertheless, an annunciation is generated indicating that the time expired. Tripping signals and signals on the expiration of time delay are available separately for each stage. The reset values are approximately 95 % below the pickup value for settings above I_N. Lower values require a higher hysteresis in order to avoid intermittent pickup on currents near the pickup value (e.g. 20 % at 0.2 $\cdot I_N$).

Figures 2-67 and 2-68 show the logic diagrams for the overcurrent stages **I>** for phase currents and for the zero sequence current stage**3I0>**.

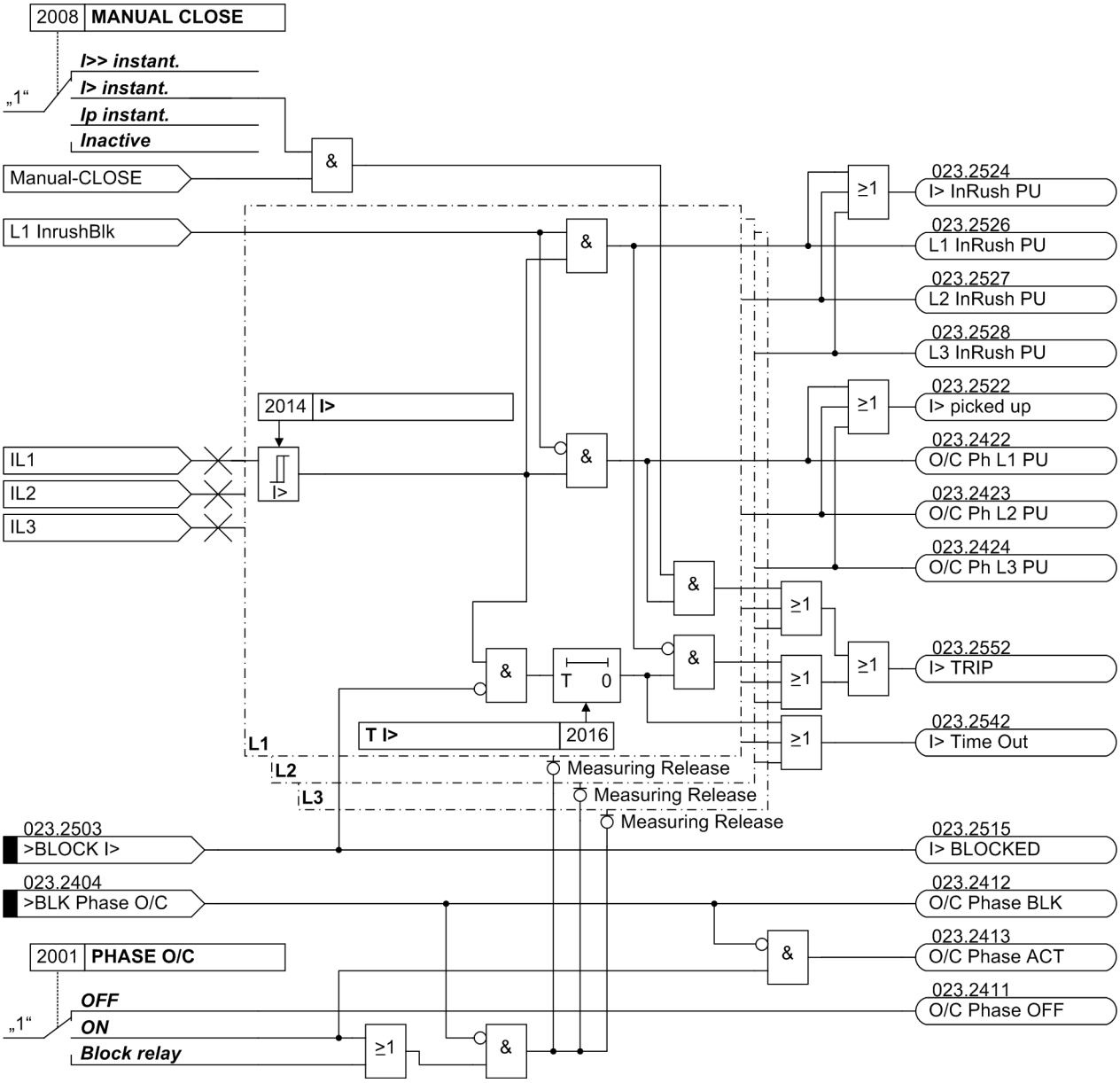

Figure 2-67 Logic diagram of the overcurrent stage I> for phase currents (simplified)

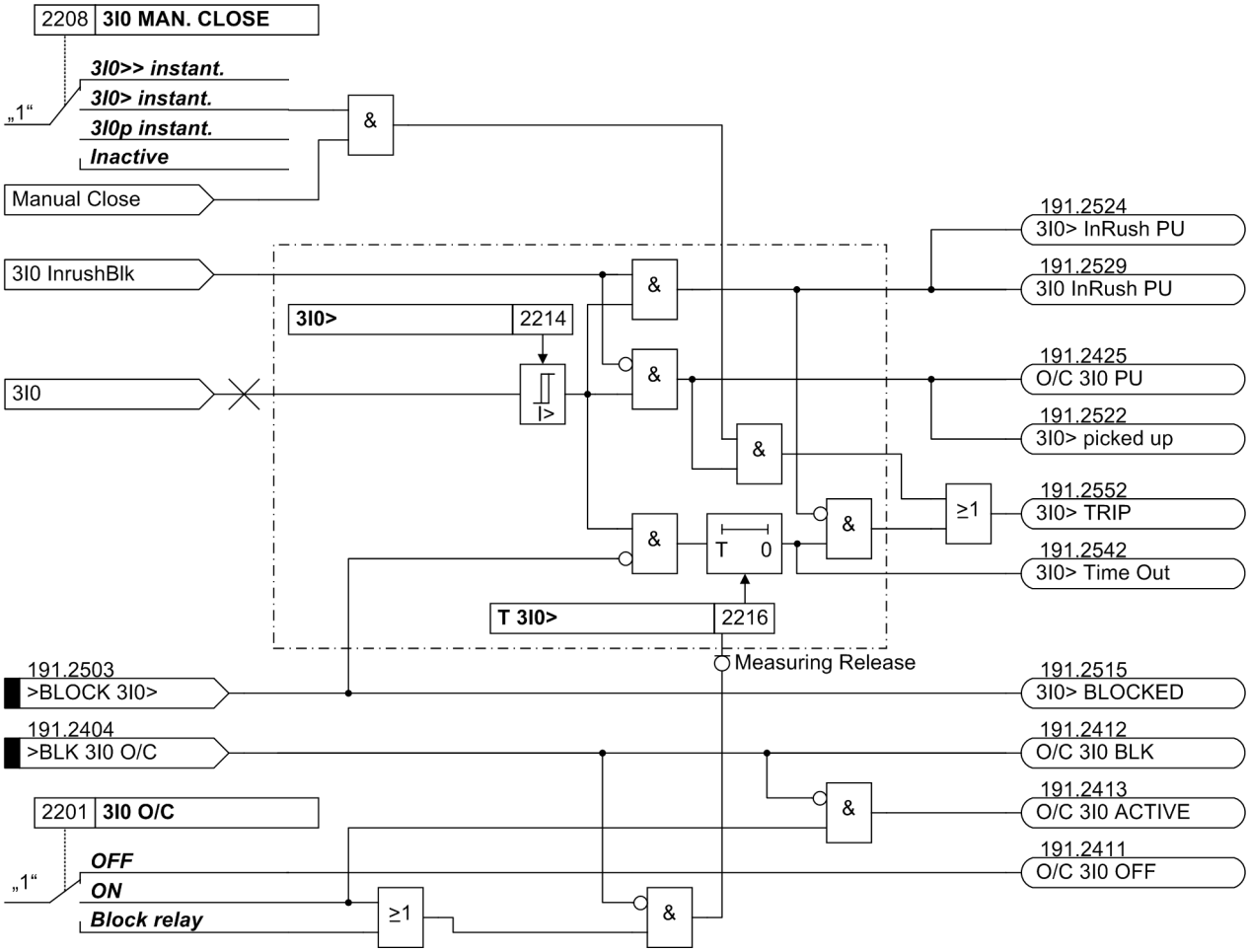

Figure 2-68 Logic diagram for the overcurrent stage 3I0> for residual current (simplified)

The pickup values of all stages **I>** (phases), **3I0>** (zero sequence current), **I>>** (phases), **3I0>>** (zero sequence current) and the time delays associated for each stage can be set individually.

2.4.1.2 Inverse Time Overcurrent Protection

The inverse-time overcurrent protection stages always operate with a characteristic either according to the IEC or the ANSI standards or according to a user-defined characteristic. The characteristics and their equations are displayed in the Technical Data. When configuring one of the inverse time characteristics, definite time stages **I>>** and **I>** are also enabled.

Pickup, Tripping

Each phase current and the zero sequence current (sum of phase currents) are compared individually to a common setting value **Ip** or **3I0p**. If a current exceeds the setting value by 1.1 times, the corresponding stage picks up and is signalled selectively. If inrush restraint is used, a frequency analysis is performed first. Depending on the detection of inrush currents, either normal pickup annunciations or relevant inrush messages are issued. For pickup, the RMS values of the fundamental harmonics are used. During the pickup of an I_p stage, the tripping time is calculated from the flowing fault current by means of an integrating measuring procedure, depending on the se-

lected tripping characteristic. After expiration of this time period, a trip command is output as long as no inrush current is detected or inrush restraint is disabled. If inrush restraint is enabled and inrush current is detected, there will be no tripping. Nevertheless, an annunciation is generated indicating that the time expired.

For the zero sequence current **3I0p** the characteristic can be selected independently of the characteristic used for the phase currents.

The pickup values of the stages **Ip** (phases) and **3I0p** (zero sequence current) and the time multipliers valid for each of these states can be set individually.

Figures 2-69 and 2-70 show the logic diagrams of the inverse overcurrent time protection for phase currents I_p and for the zero sequence currents **3I0p**.

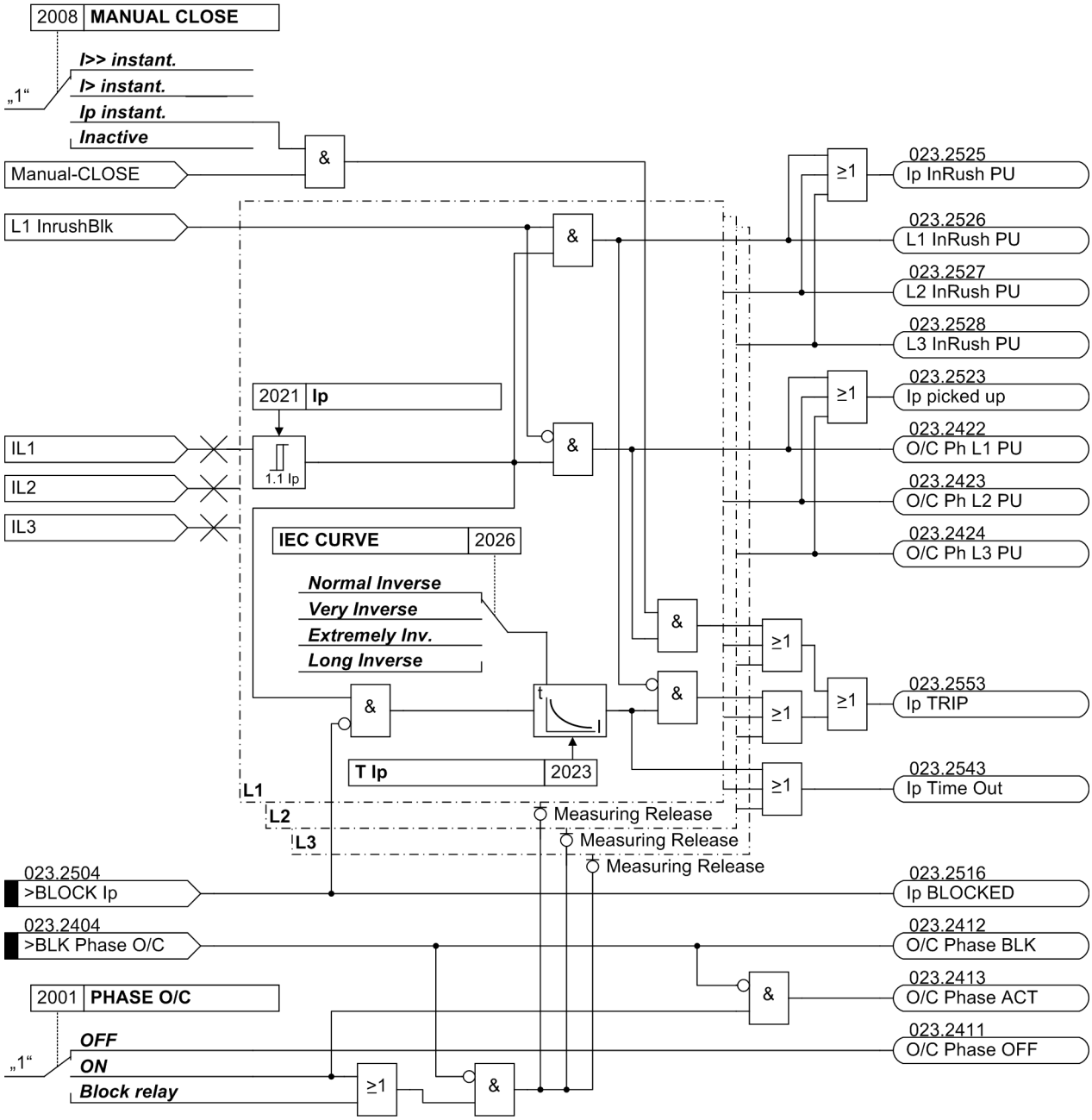

Figure 2-69 Logic diagram of the inverse overcurrent protection for phase currents — example of IEC characteristic (simplified)

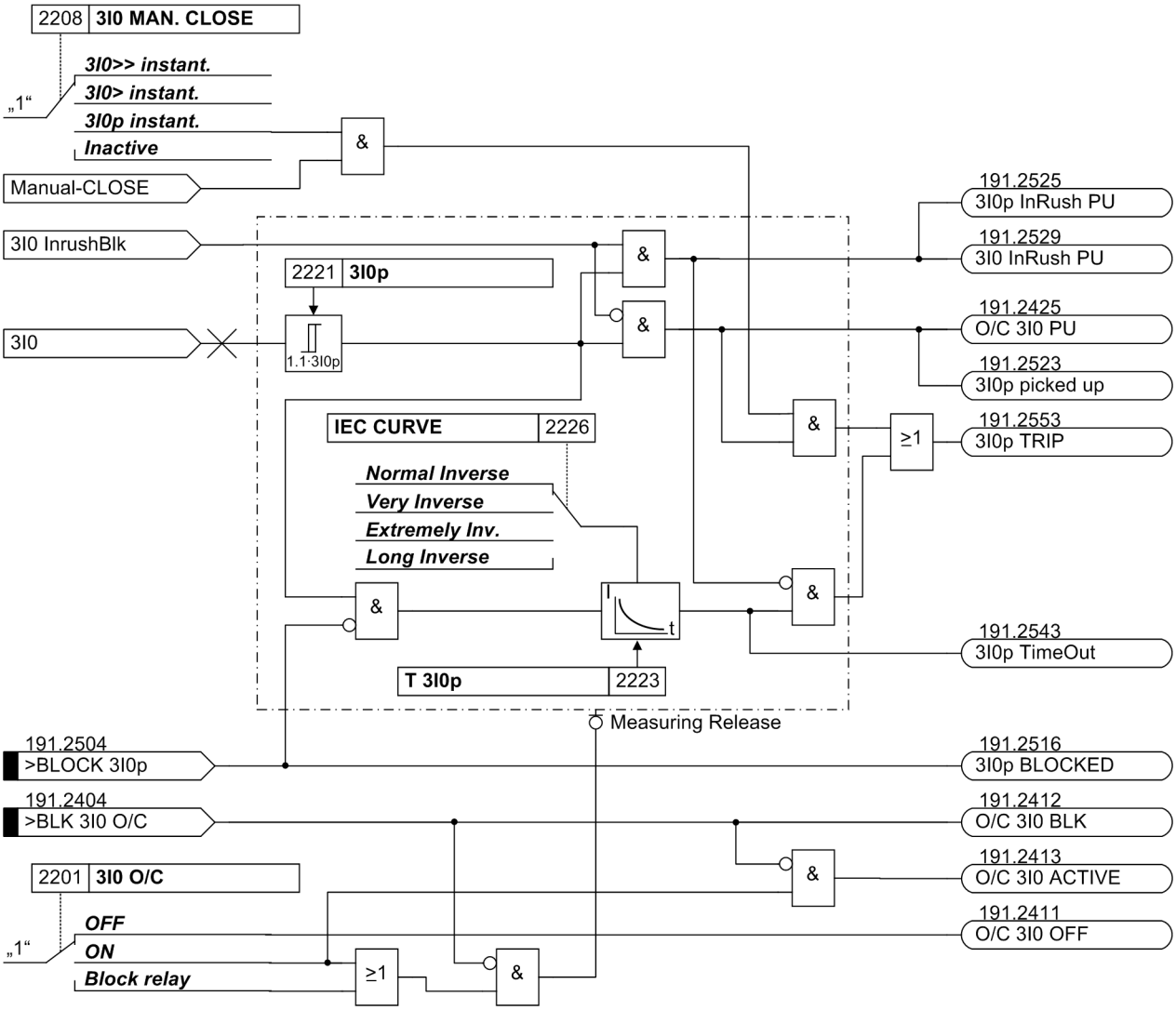

Figure 2-70 Logic diagram of the definite time overcurrent protection for zero sequence current — example of IEC characteristic (simplified)

Dropout

You can determine whether the dropout of a stage is to follow right after the threshold is undershot or whether it is to be evoked by disk emulation. "Right after" means that the pickup drops out when approx. 95 % of the set pickup value is undershot and in a new pickup the time counter starts at zero.

The disk emulation evokes a dropout process (time counter is decrementing) which begins after de-energization and this process corresponds to the reset rotation of a Ferraris disk (explaining its denomination „disk emulation“). In case several faults occur successively, it is ensured that due to the inertia of the Ferraris disk the „history“ is taken into consideration and the time behaviour is adapted. Reset begins as soon as 90 % of the setting value is undershot, in accordance with the dropout curve of the selected characteristic. In the range between the dropout value (95 % of the pickup value) and 90 % of the setting value, the incrementing and the decrementing processes are in idle state.

Disk emulation offers advantages when the grading coordination chart of the time overcurrent protection must be coordinated with other devices in the system on an electro-mechanical or an induction base.

User-Specified Curves

When user-defined curves are utilized, the tripping curve may be defined point by point. Up to 20 pairs of values (current, time) may be entered. With these values the device approximates the characteristic by means of linear interpolation.

If required, the dropout characteristic can also be defined. For the functional description see „Dropout“. If no user-configurable dropout characteristic is desired, dropout is initiated when approx. 95 % of the pickup value is undershot; when a new pickup is evoked, the timer starts again at zero.

2.4.1.3 Manual Close Command

When a circuit breaker is closed onto a faulted protective object, a high speed re-trip by the breaker is often desired. The manual closing feature is designed to remove the delay from one of the time overcurrent stages when the breaker is manually closed onto a fault. The time delay is then bypassed via an impulse from the external control switch. This pulse is prolonged by at least 300 ms. To enable the device to react properly on occurrence of a fault, address 2008A **MANUAL CLOSE** and/or address 2208A **3IO MAN. CLOSE** have to be set accordingly. Thus, the user determines for both stages, the phase and the residual current stage, which pickup value is active with which delay when the circuit breaker is closed manually.

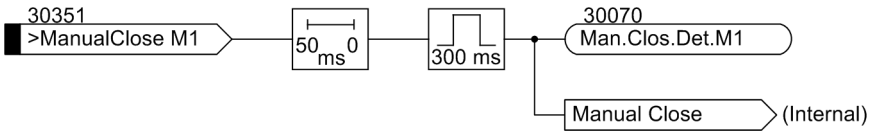

Figure 2-71 Manual close processing (simplified)

Processing of the manual close command can be executed for each measuring location or side. Manual close signal is also generated when an internal control command is given to a breaker which is assigned to the same protection function as the time overcurrent protection, in the Power System Data 1 (Subsection 2.1.4).

Strict attention must be paid that the manual close condition is derived from that circuit breaker which feeds the object that is protected by the time overcurrent protection! The breaker concerning the phase overcurrent protection may be different from that for the zero sequence overcurrent protection, dependent of the assignment of these protection functions.

2.4.1.4 Dynamic Cold Load Pickup

With the dynamic cold load pickup feature, it is possible to dynamically increase the pickup values of the time overcurrent protection stages when dynamic cold load overcurrent conditions are anticipated, i.e. when consumers have increased power consumption after a longer period of dead condition, e.g. in air conditioning systems, heating systems, motors, etc. By allowing pickup values and the associated time delays to increase dynamically, it is not necessary to incorporate cold load capability in the normal settings.

This function of the dynamic cold load pickup conditions is common for all time overcurrent stages and is explained in the section 2.6 „Dynamic Cold Load Pickup for Time

Overcurrent Protection“. The alternative pickup values themselves can be set for each of the stages of the time overcurrent protection.

2.4.1.5 Inrush Restraint

When switching unloaded transformers or shunt reactors on a live busbar, high magnetising (inrush) currents may occur. These inrush currents may be several times the nominal current, and, depending on the size and design of the transformer, may last from several ten milliseconds to several seconds.

Although overcurrent detection is based only on the fundamental harmonic component of the measured currents, false pickup due to inrush might occur since the inrush current may even contain a considerable component of fundamental harmonic.

The time overcurrent protection provides an integrated inrush restraint function This blocks the „normal“ pickup of the I> or I_p stages (not I>>) for phase and residual currents in cash of inrush detection. After detection of inrush currents above a pickup value special inrush signals are generated. These signals also initiate fault annunciations and start the assigned trip delay time. If inrush current is still detected after expiration of the delay time, an annunciation is output only reporting that time elapsed but tripping is suppressed.

The inrush current is characterised by a considerable 2nd harmonic content (double rated frequency) which is practically absent in the case of a short-circuit. If the second harmonic content of a phase current exceeds a selectable threshold, trip is blocked for this phase. The same applies to the zero sequence current.

The inrush restraint has an upper limit: if a certain (adjustable) current value is exceeded, it will no longer be effective, since there must be an internal current-intensive short-circuit. The lower limit is the operating limit of the harmonic filter (0.1 I_N).

Figure 2-72 shows a simplified logic diagram.

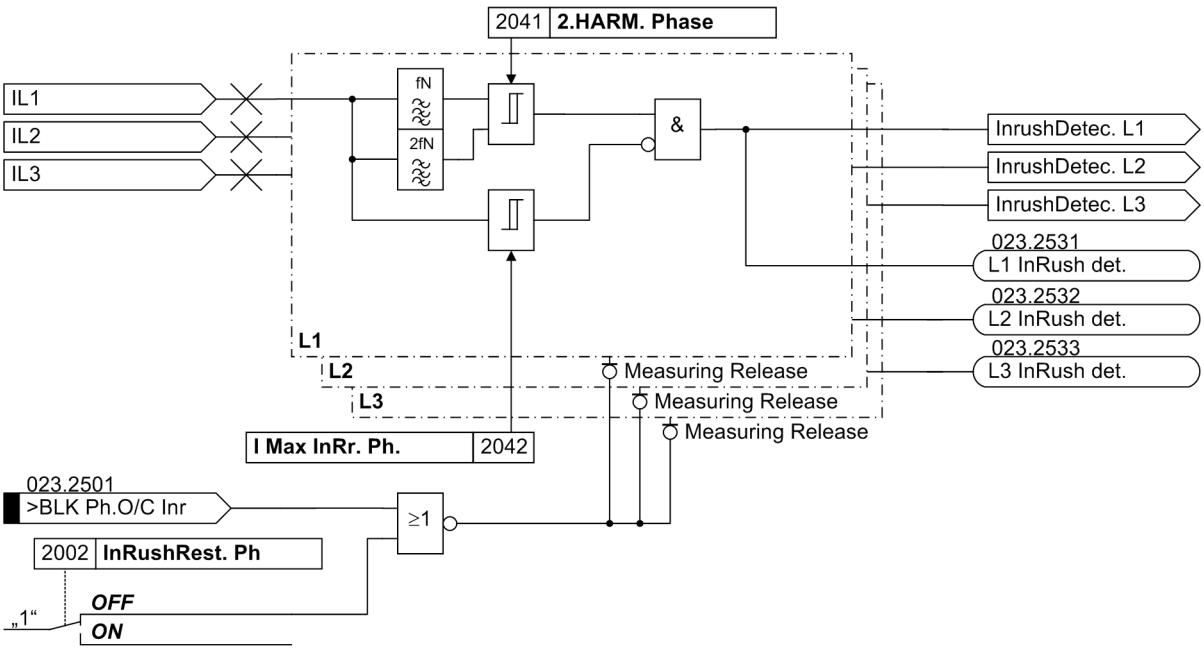

Figure 2-72 Logic diagram of the inrush restraint feature — example for phase currents (simplified)

Since the harmonic restraint operates individually per phase, the protection is fully operative even when e.g. the transformer is switched onto a single-phase fault, whereby inrush currents may possibly be present in one of the healthy phases. However, it is also possible to set the protection such that not only the phase with inrush current exhibiting harmonic content in excess of the permissible value is blocked but also the other phases of the associated stage are blocked (so called "cross-block function"). This cross-block can be limited to a selectable duration. Figure 2-73 shows the logic diagram of this function.

Cross-block refers only to the three phases. Phase inrush currents do not block the residual current stages nor vice versa.

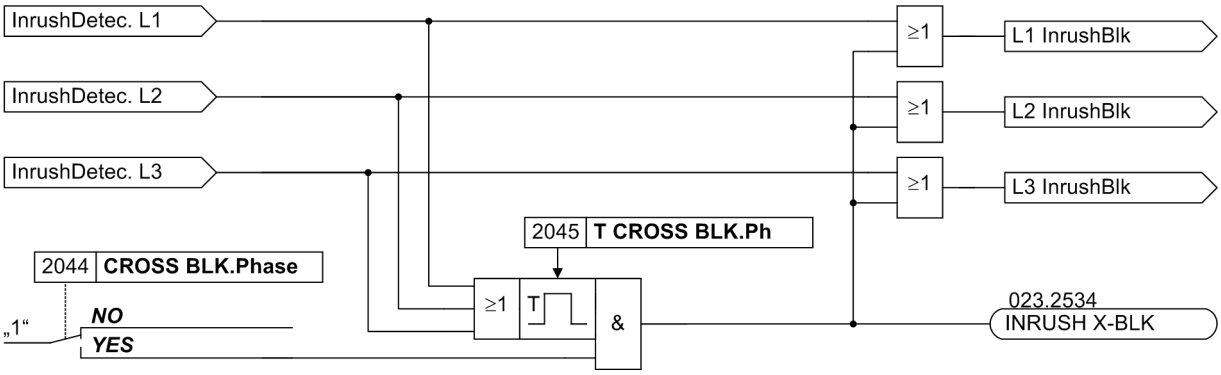

Figure 2-73 Logic diagram of the crossblock function for the phase currents (simplified)

2.4.1.6 Fast Busbar Protection Using Reverse Interlocking

Application Example

Each of the overcurrent stages can be blocked via binary inputs of the relay. A setting parameter determines whether the binary input operates in the “normally open” (i.e. energise input to block) or the “normally closed” (i.e. energise input to release) mode. Thus, the overcurrent time protection can be used as fast busbar protection in star connected networks or in open ring networks (ring open at one location), using the „reverse interlock“ principle. This is used in high voltage systems, in power station auxiliary supply networks, etc., in which cases a transformer feeds from the higher voltage system onto a busbar with several outgoing feeders.

The time overcurrent protection is applied to the lower voltage side. Reverse interlocking means that the overcurrent time protection can trip within a short time **T I>>**, which is independent of the grading time, if it is not blocked by pickup of one of the next downstream time overcurrent relays. It is always the protection element nearest to the fault that will trip with the short time delay since this element cannot be blocked by a protection element located behind the fault. The time stages **T I>** or **T Ip** operate as delayed backup stages. Pickup signals of the load-side protective relay are output as input message (exists separately for the phase current stages and the zero sequence current) to a binary input at the feeder-side protective relay.

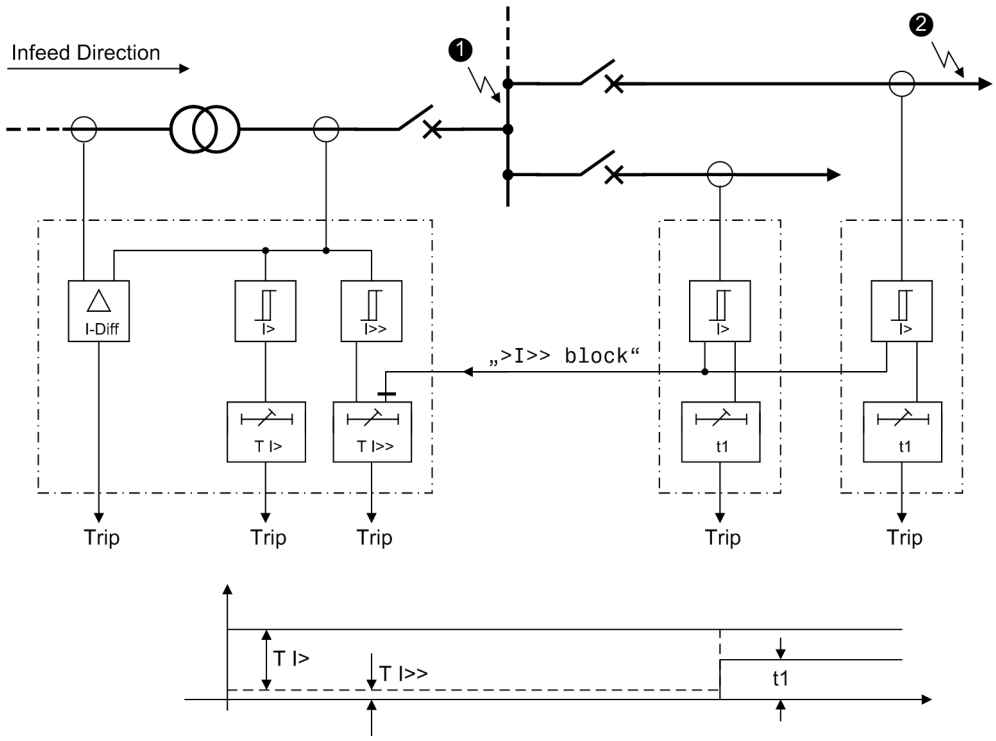

Figure 2-74 Fast busbar protection using reverse interlock — principle

2.4.2 Time Overcurrent Protection for Phase Currents

The function and operation of the definite-time overcurrent protection and of the inverse-time overcurrent protection for residual current is discussed in detail in section „Overcurrent Time Protection - General“ (see subsection 2.4.1).

The following paragraphs contain the specific information for setting the overcurrent protection for phase currents **`Phase O/C`**.

2.4.2.1 Setting Notes

General

Note

The first overcurrent protection for phase currents is described in the setting instructions. The parameter addresses and message numbers of the second and third overcurrent protection are described at the end of the setting instructions under „Additional Overcurrent Protection Functions for Phase Currents“.

During configuration of the functional scope (section 2.1.3) the characteristic type is determined under address 120 **`DMT/IDMT Phase`**. Only the settings for the selected

characteristic can be performed here. The definite time stages I>> and I> are available in all cases.

If a second or third phase overcurrent protection is used, this must be configured accordingly in address 130 **DMT/IDMT Phase2** and 132 **DMT/IDMT Phase3**.

Each protection function must be assigned to a side of the main protected object or another 3-phase current measuring location. This can be carried out separately for each protection function (section 2.1.4 under margin heading „Additional Three-phase Protection Functions“). Consider also the assignment of the measured current inputs of the device against the measuring locations (current transformer sets) of the power plant (section 2.1.4 under margin heading „Assignment of 3-phase Measuring Locations“).



Note

If the time overcurrent protection is assigned to a side of the main protected object, the current values are set referred to the rated current of that side I/I_{NS}. In other cases, current values are set in amps.

At address 2001 **PHASE O/C**, phase overcurrent protection may be switched to ***ON*** or ***OFF***. The option ***Block relay*** allows to operate the protection but the trip output relay is blocked.

Address 2008 **MANUAL CLOSE** determines which phase current stage is to be activated instantaneously with a detected manual close. Settings ***I>> instant.*** and ***I> instant.*** can be set independently from the selected type characteristics;***Ip instant.*** is only available if one of the inverse time stages is configured. This setting can only be made with DIGSI under **Additional Settings**.

If time overcurrent protection is applied on the feeding side of a transformer, select the higher stage I>>, which does not pick up by the inrush current or set the manual close feature to ***Inactive***.

In address 2002 **InRushRest. Ph** inrush restraint (restraint with 2nd harmonic) is enabled or disabled for all phase current stages of time overcurrent protection (except stage I>>). Set ***ON*** if one time overcurrent protection stage is to operate at the supply side of a transformer. Otherwise, retain setting ***OFF***. If you intend to set a very small pickup value for any reason, consider that the inrush restraint function cannot operate below 10 % nominal current (lower limit of harmonic filtering).

High-set Stages I>>

The **I>>** stage (address 2011 or 2212) combined with the **I>** stage or the **Ip** stage, results in a two-stage characteristic. If one stage is not required, the pickup value has to be set to ∞. Stage **I>>** always operates with a defined delay.

If time overcurrent protection is used on the supply side of a transformer, a series reactor, a motor or starpoint of a generator, this stage can also be used for current grading. Setting instructs the device to pick up on faults only inside the protected object but not for traversing fault currents.

Example:

Transformer used in the infeed of a bus supply with the following data:

Transformer	YNd5
	35 MVA
	110 kV/20 kV
	u_{sc} = 15 %
Current Transformer	200 A / 5 A on the 110 kV side

The time overcurrent protection is assigned to the 110 kV side (= feeding side).

The maximum possible three-phase fault current on the 20 kV side, assuming an impressed voltage source on the 110 kV side, is:

$$I_{3polemax} = \frac{1}{u_{sc\ transf}} \cdot I_{Ntransf} = \frac{1}{u_{sc\ transf}} \cdot \frac{S_{Ntransf}}{\sqrt{3} \cdot U_N} = \frac{1}{0.15} \cdot \frac{35\ MVA}{\sqrt{3} \cdot 110\ kV} = 1224.7\ A$$

Assuming a safety margin of 20 %, the following primary setting value results:

Setting value **I>>** = 1.2 · 1224.7 A = 1470 A

For settings with secondary values the currents will be converted for the secondary side of the current transformers.

Secondary setting value:

$$\text{Setting value } I>> = \frac{1470\ A}{200\ A} \cdot 5\ A = 36.7\ A$$

i.e. for fault currents higher than 1470 A (primary) or 36.7 A (secondary) the fault is in all likelihood located in the transformer zone. This fault may be cleared immediately by the overcurrent protection.

When setting in per-unit values, the rated current of the protected object (here equal to the rated current of the side) is cancelled. Thus the formula gives:

$$\frac{I_{3polemax}}{I_{NS}} = \frac{1}{u_{sc\ transf}} = \frac{1}{0.15} = 0.667$$

With the same safety factor results:

Setting value **I>>** = 0.8 · II_{NS} (rated current of the side).

Increased inrush currents, if their fundamental oscillation exceeds the setting value, are rendered harmless by delay times (address 2013**T I>>**). The inrush restraint does not apply to the stages **I>>**.

Using the principle of the „Reverse Interlocking“ the multi-stage function of the time overcurrent protection offers its advantages: Stage **I>>** is used as a fast busbar protection with a short safety delay **T I>>** (e.g. 50 ms). Stage **I>>** is blocked for faults at the outgoing feeders. Stages **I>** or **Ip** serve as backup protection. The pickup values of both elements (**I>** or **Ip** and **I>>**) are set equal. Delay time **T I>** or **T Ip** (IEC characteristic) or **D Ip** (ANSI characteristic) is set in such manner that it overgrades the delay for the outgoing feeders.

If fault protection for motors is applied, it has to be ensured that the setting value **I>>** is smaller than the smallest (two-pole) fault current and higher than the highest startup current. Since the maximum appearing startup current is usually below 1.6x the rated startup current (event in unfavourable conditions), the following setting is adequate for fault current stages **I>>**:

$1.6 \cdot I_{startup} < \mathbf{I>>} < I_{k\ 2pol}$

The potential increase in starting current caused by overvoltage conditions is already accounted for by the 1.6 factor. The I>> stage can trip instantaneously (**T I>>** = ***0.00 s***), since there is no saturation of shunt reactance for motors, other than for transformers.

The set time **T I>>** is an additional delay time and does not include the operating time (measuring time, etc.). The delay can be set to ∞. If set to infinity, the pickup of this function will be indicated but the stage will not trip after pickup. If a pickup threshold is set to ∞, neither a pickup annunciation nor a trip is generated.

Definite Overcurrent Stages I>

The setting of the **I>** stage (address 2014 or 2015) is mainly determined by the maximum operating current. A pickup caused by an overload must be excluded, as the device operates in this mode as fault protection with correspondingly short tripping times and not as overload protection. For lines or busbars a rate of approx. 20 % above the maximum expected (over)load is set, for transformers and motors a rate of approx. 40 %.

The time delays to be set (address 2116 **T I>**) are derived from the coordination chart of the network.

The set times are purely additional time delays that do not include the operating time (measuring time, etc.). The delay can be set to ∞. If set to infinity, the pickup of the corresponding function will be signaled but the stage will not issue a trip command. If a pickup threshold is set to ∞, neither a pickup indication or a trip will be triggered.

Overcurrent Stages I_p with IEC characteristics

The inverse time stages, depending on the configuration („Functional Scope“, address 120 (see section 2.1.3.1), enables the user to select different characteristics.

With the IEC characteristics (address 120 **DMT / IDMT Phase** = ***TOC IEC***) the following options are available at address 2026 **IEC CURVE**:

- ***Normal Inverse*** (inverse, type A according to IEC 60255-3),
- ***Very Inverse*** (very inverse, type B according to IEC 60255-3),
- ***Extremely Inv.*** (extremely inverse, type C according to IEC 60255-3), and
- ***Long Inverse*** (longtime, type B according to IEC 60255-3).

The characteristics and the equations on which they are based, are listed in the „Technical Data“.

If the inverse time trip characteristic is selected, it must be noted that a safety factor of about 1.1 has already been included between the pickup value and the setting value. This means that a pickup will only occur if a current of about 1.1 times the setting value is present.

The current value is set under address 2021 **Ip** or2022 **Ip**. The maximum operating current is of primary importance for the setting. Pickup due to overload should never occur, since the device, in this modem, operates as fault protection with correspondingly short tripping times and not as overload protection.

The corresponding time multiplier is accessible via address 2023 **T Ip**. It must be coordinated with the time grading of the network.

The time multiplier can also be set to ∞. If set to infinity, the pickup of this function will be indicated but the stage will not trip after pickup. If the $_p$ stage is not required at all, select address 120 **DMT / IDMT Phase** = ***Definite Time*** when configuring the protection functions.

If under address 2225 **TOC DROP-OUT** the ***Disk Emulation*** are set, dropout is produced in accordance with the dropout characteristic, as set out in the functional description of the inverse time overcurrent protection in section „Dropout Behaviour“.

Overcurrent Stages I_p with ANSI characteristics

The inverse time stage, depending on the configuration of the functional scope enables the user to select different characteristics.

With the ANSI characteristics (address 120 **DMT/IDMT Phase** = ***TOC ANSI***) the following is made available in address 2027 **ANSI CURVE**:

- ***Definite Inv.***,
- ***Extremely Inv.***,
- ***Inverse***,
- ***Long Inverse***,
- ***Moderately Inv.***,
- ***Short Inverse***, and
- ***Very Inverse***

The characteristics and the formulas on which they are based, are listed in the „Technical Data“.

If the inverse time trip characteristic is selected, it must be noted that a safety factor of about 1.1 has already been included between the pickup value and the setting value. This means that a pickup will only occur if a current of about 1.1 times of the setting value is present.

The current value is set under address 2021 **Ip** or 2022 **Ip**. The maximum operating current is of primary importance for the setting. Pickup due to overload should never occur, since the device, in this modem, operates as fault protection with correspondingly short tripping times and not as overload protection.

The corresponding time multiplier is set at address 2024 **D Ip**. It must be coordinated with the time grading of the network.

The time multiplier can also be set to ∞. If set to infinity, the pickup of this function will be indicated but the stage will not trip after pickup. If the I_p stage is not required at all, select address 120 **DMT/IDMT Phase** = ***Definite Time***.

If disk emulation is set in address 2025 **TOC DROP-OUT**, dropout is produced according to the dropout characteristic. For further information refer to section „Dropout Behaviour“ (see section 2.4.1, margin heading „Dropout Behaviour“).

Dynamic Cold Load Pickup

An alternative set of pickup values can be set for each stage. It may be selected automatically in a dynamic manner during operation (see section 2.6).

For the stages the following alternative values are set:

- For definite time overcurrent protection (phases):
  address 2111 or 2112 for pickup value **I>>**,
  address 2113 for delay time **T I>>**,
  address 2114 or 2115 for pickup value **I>**,
  address 2116 for delay time **T I>**,
- For inverse time overcurrent protection (phases) acc. to IEC curves:
  address 2121 or 2122 for pickup value **Ip**,
  address 2123 for time multiplier **T Ip**;
- For inverse time overcurrent protection (phases) acc. to ANSI curves:
  address 2121 or 2122 for pickup value **Ip**,
  address 2124 for time multiplier **D Ip**;

User-defined Characteristics

For inverse time overcurrent protection the user may define his own tripping and dropout characteristic. For configuration in DIGSI a dialogue box appears. Enter up to 20 pairs of current value and tripping time value.

The characteristics can also be viewed in DIGSI as an illustration.

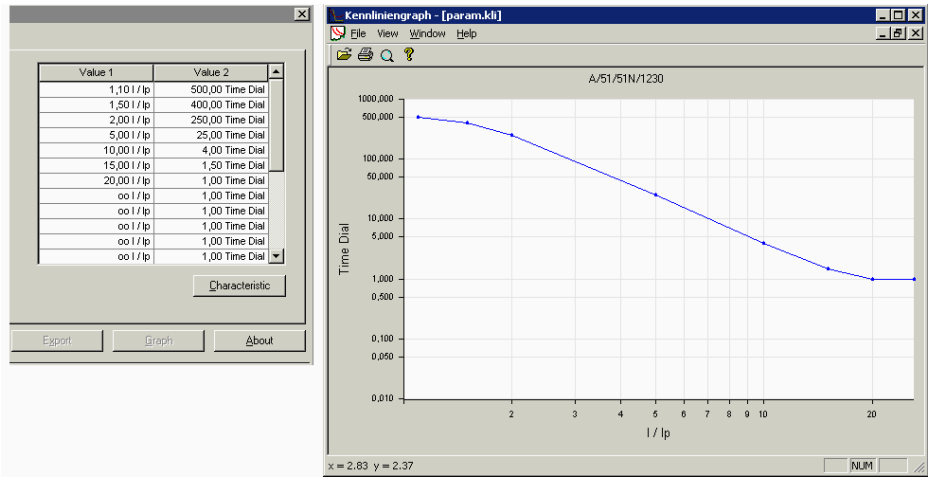

Figure 2-75 Entry and visualisation of a user-specific trip characteristic with DIGSI - example

In order to be able to create a user-defined tripping characteristic, the following must be set during configuration of the scope of functions in address120 **DMT / IDMT Phase**, option ***User Defined PU*** (see section 2.1.3.1). If you also want to specify the dropout characteristic, set ***User def. Reset***.

The value pairs refer to the setting values for current and time.

Since current values are rounded in a specific pattern before they are processed in the device, we recommend to use exactly the same preferred current values you can find in the 2-7 table.

Table 2-7 Preferred values of standardized currents for user-defined **trip characteristics**

I/I_p = 1 to 1.94		I/I_p = 2 to 4.75		I/I_p = 5 to 7.75		I/I_p = 8 to 20	
1.00	1.50	2.00	3.50	5.00	6.50	8.00	15.00
1.06	1.56	2.25	3.75	5.25	6.75	9.00	16.00
1.13	1.63	2.50	4.00	5.50	7.00	10.00	17.00
1.19	1.69	2.75	4.25	5.75	7.25	11.00	18.00
1.25	1.75	3.00	4.50	6.00	7.50	12.00	19.00
1.31	1.81	3.25	4.75	6.25	7.75	13.00	20.00
1.38	1.88					14.00	
1.44	1.94						

The default setting of current values is ∞. They are, therefore, not enabled — and no pickup or tripping of these protective functions will occur.

For specification of a tripping characteristic please note the following:

- The value pairs are to be indicated in continuous order. You may also enter less than 20 value pairs. In most cases, 10 value pairs would be sufficient to be able to define an exact characteristic. A value pair which will not be used, has to be made invalid by entering ∞ for the threshold! Please ensure that a clear and steady characteristic is formed by the value pairs.
- For currents select the values from the above table and add the corresponding time values. Deviating values I/Ip are rounded to the next adjacent value. This, however, will not be indicated.
- Currents smaller than the current value of the smallest characteristic point do not lead to a prolongation of the tripping time. The pickup characteristic (see Figure 2-76, right side) goes parallel to the current axis, up to the smallest characteristic point.
- Currents greater than the current value of the largest characteristic point do not lead to a reduction of the tripping time. The pickup characteristic (see Figure 2-76, right side) goes parallel to the current axis, beginning with the largest characteristic point.

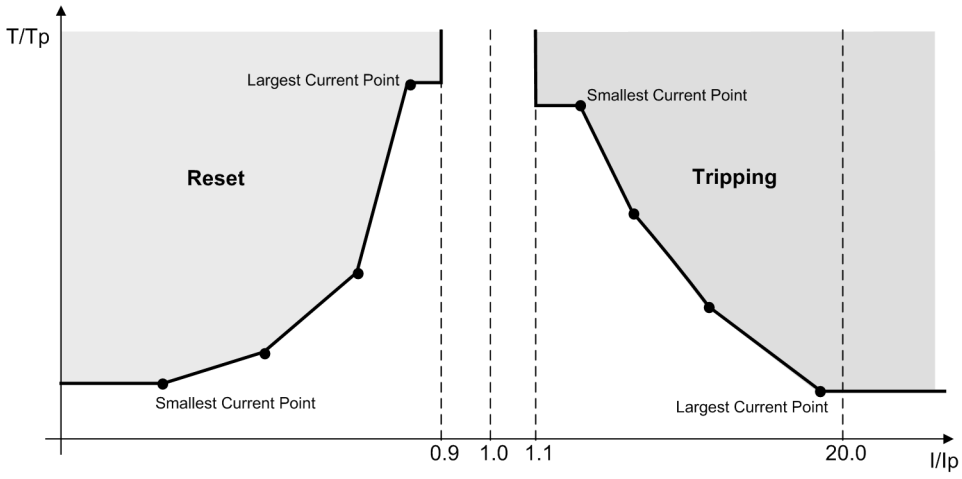

Figure 2-76 User-specified characteristic — example

For specification of a dropout characteristic please note the following:

- For currents select the values from table 2-8 and add the corresponding time values. Deviating values I/I_p are rounded. This, however, will not be indicated.
- Currents greater than the current value of the largest characteristic point do not lead to a prolongation of the dropout time. The dropout characteristic (see Figure 2-76, left side) goes parallel to the current axis, up to the largest characteristic point.
- Currents smaller than the current value of the smallest characteristic point do not lead to a reduction of the dropout time. The dropout characteristic (see Figure 2-76, left side) goes parallel to the current axis, beginning with the smallest characteristic point.
- Currents smaller than 0.05 · times the setting value of currents lead to an immediate dropout.

Table 2-8 Preferred values of standard currents for user-defined **dropout characteristics**

I/I_p = 1 to 0.86		I/I_p = 0.84 to 0.67		I/I_p = 0.66 to 0.38		I/I_p = 0.34 to 0.00	
1.00	0.93	0.84	0.75	0.66	0.53	0.34	0.16
0.99	0.92	0.83	0.73	0.64	0.50	0.31	0.13
0.98	0.91	0.81	0.72	0.63	0.47	0.28	0.09
0.97	0.90	0.80	0.70	0.61	0.44	0.25	0.06
0.96	0.89	0.78	0.69	0.59	0.41	0.22	0.03
0.95	0.88	0.77	0.67	0.56	0.38	0.19	0.00
0.94	0.86						

Inrush Restraint

At address 2002 **InRushRest. Ph** of the general settings, the inrush restraint can be enabled (***ON***) or disabled (***OFF***). Especially for transformers and if overcurrent time protection is used on the supply side, this inrush restraint is required. Function parameters of the inrush restraint are set in „Inrush“.

The inrush restraint is based on an evaluation of the 2nd harmonic present in the inrush current. The ratio of 2nd harmonics to the fundamental component **2.HARM. Phase** (address 2041) is set to I_{2fN}/I_{fN} = 15 % as default setting. It can be used without being changed. To provide more restraint in exceptional cases, where energising conditions are particularly unfavourable, a smaller value can be set in the aforementioned address.

If the current exceeds the value indicated in address 2042 or 2043 **I Max InRr. Ph.**, no restraint will be provoked by the 2nd harmonic.

The inrush restraint can be extended by the so-called "crossblock" function. This means that on harmonic content overshoot in only one phase, all three phases of the I> or $_p$ stage are blocked. At address 2044 **CROSS BLK.Phase** the crossblock function is set to ***YES*** or to ***NO***.

The time period for which the crossblock function is active after detection of inrushes is set in address 2045 **T CROSS BLK.Ph**.

Additional Overcurrent Protection Functions for Phase Currents

In the aforementioned description, the first overcurrent protection for phase currents is described respectively. The differences in the parameter addresses and message numbers of the first, second and third overcurrent protection are illustrated in the following table. The positions marked by x are identical.

	Addresses of the parameters	Addresses of the dynamic parameters	Message no.
1. Overcurrent protection for phase currents	20xx	21xx	023.xxxx(.01)
2. Overcurrent protection for phase currents	30xx	31xx	207.xxxx(.01)
3. Overcurrent protection for phase currents	32xx	33xx	209.xxxx(.01)



Note

If the overcurrent protection is assigned to a side of the main protected object, the respective values apply to the setting of the current values I/I_{NS}, i.e. with reference to the rated current of the side of the main protected object.

2.4.2.2 Settings

Addresses which have an appended "A" can only be changed with DIGSI, under Additional Settings.

The table indicates region-specific presettings. Column C (configuration) indicates the corresponding secondary nominal current of the current transformer.

Addr.	Parameter	C	Setting Options	Default Setting	Comments
2001	PHASE O/C		ON OFF Block relay	OFF	Phase Time Overcurrent
2002	InRushRest. Ph		ON OFF	OFF	InRush Restrained O/C Phase
2008 A	MANUAL CLOSE		I>> instant. I> instant. Ip instant. Inactive	I>> instant.	O/C Manual Close Mode
2011	I>>	1 A	0.10 .. 35.00 A; ∞	4.00 A	I>> Pickup
		5 A	0.50 .. 175.00 A; ∞	20.00 A	
2012	I>>		0.10 .. 35.00 I/InS; ∞	4.00 I/InS	I>> Pickup
2013	T I>>		0.00 .. 60.00 sec; ∞	0.10 sec	T I>> Time Delay
2014	I>	1 A	0.10 .. 35.00 A; ∞	2.00 A	I> Pickup
		5 A	0.50 .. 175.00 A; ∞	10.00 A	
2015	I>		0.10 .. 35.00 I/InS; ∞	2.00 I/InS	I> Pickup
2016	T I>		0.00 .. 60.00 sec; ∞	0.30 sec	T I> Time Delay

Addr.	Parameter	C	Setting Options	Default Setting	Comments
2021	Ip	1 A	0.10 .. 4.00 A	2.00 A	Ip Pickup
		5 A	0.50 .. 20.00 A	10.00 A	
2022	Ip		0.10 .. 4.00 I/InS	2.00 I/InS	Ip Pickup
2023	T Ip		0.05 .. 3.20 sec; ∞	0.50 sec	T Ip Time Dial
2024	D Ip		0.50 .. 15.00 ; ∞	5.00	D Ip Time Dial
2025	TOC DROP-OUT		Instantaneous Disk Emulation	Disk Emulation	TOC Drop-out characteristic
2026	IEC CURVE		Normal Inverse Very Inverse Extremely Inv. Long Inverse	Normal Inverse	IEC Curve
2027	ANSI CURVE		Very Inverse Inverse Short Inverse Long Inverse Moderately Inv. Extremely Inv. Definite Inv.	Very Inverse	ANSI Curve
2031	I/Ip PU T/Tp		1.00 .. 20.00 I/Ip; ∞ 0.01 .. 999.00 TD		Pickup Curve I/Ip - TI/TIp
2032	MofPU Res T/Tp		0.05 .. 0.95 I/Ip; ∞ 0.01 .. 999.00 TD		Multiple of Pickup <-> TI/TIp
2041	2.HARM. Phase		10 .. 45 %	15 %	2nd harmonic O/C Ph. in % of fundamental
2042	I Max InRr. Ph.	1 A	0.30 .. 25.00 A	7.50 A	Maximum Current for Inr. Rest. O/C Phase
		5 A	1.50 .. 125.00 A	37.50 A	
2043	I Max InRr. Ph.		0.30 .. 25.00 I/InS	7.50 I/InS	Maximum Current for Inr. Rest. O/C Phase
2044	CROSS BLK.Phase		NO YES	NO	CROSS BLOCK O/C Phase
2045	T CROSS BLK.Ph		0.00 .. 180.00 sec	0.00 sec	CROSS BLOCK Time O/C Phase
2111	I>>	1 A	0.10 .. 35.00 A; ∞	10.00 A	I>> Pickup
		5 A	0.50 .. 175.00 A; ∞	50.00 A	
2112	I>>		0.10 .. 35.00 I/InS; ∞	10.00 I/InS	I>> Pickup
2113	T I>>		0.00 .. 60.00 sec; ∞	0.10 sec	T I>> Time Delay
2114	I>	1 A	0.10 .. 35.00 A; ∞	4.00 A	I> Pickup
		5 A	0.50 .. 175.00 A; ∞	20.00 A	
2115	I>		0.10 .. 35.00 I/InS; ∞	4.00 I/InS	I> Pickup
2116	T I>		0.00 .. 60.00 sec; ∞	0.30 sec	T I> Time Delay

Addr.	Parameter	C	Setting Options	Default Setting	Comments
2121	Ip	1 A	0.10 .. 4.00 A	4.00 A	Ip Pickup
		5 A	0.50 .. 20.00 A	20.00 A	
2122	Ip		0.10 .. 4.00 I/InS	4.00 I/InS	Ip Pickup
2123	T Ip		0.05 .. 3.20 sec; ∞	0.50 sec	T Ip Time Dial
2124	D Ip		0.50 .. 15.00 ; ∞	5.00	D Ip Time Dial

2.4.2.3 Information List

No.	Information	Type of Information	Comments
023.2404	>BLK Phase O/C	SP	>BLOCK Phase time overcurrent
023.2411	O/C Phase OFF	OUT	Time Overcurrent Phase is OFF
023.2412	O/C Phase BLK	OUT	Time Overcurrent Phase is BLOCKED
023.2413	O/C Phase ACT	OUT	Time Overcurrent Phase is ACTIVE
023.2422	O/C Ph L1 PU	OUT	Time Overcurrent Phase L1 picked up
023.2423	O/C Ph L2 PU	OUT	Time Overcurrent Phase L2 picked up
023.2424	O/C Ph L3 PU	OUT	Time Overcurrent Phase L3 picked up
023.2491	O/C Ph. Not av.	OUT	O/C Phase: Not available for this object
023.2501	>BLK Ph.O/C Inr	SP	>BLOCK time overcurrent Phase InRush
023.2502	>BLOCK I>>	SP	>BLOCK I>>
023.2503	>BLOCK I>	SP	>BLOCK I>
023.2504	>BLOCK Ip	SP	>BLOCK Ip
023.2514	I>> BLOCKED	OUT	I>> BLOCKED
023.2515	I> BLOCKED	OUT	I> BLOCKED
023.2516	Ip BLOCKED	OUT	Ip BLOCKED
023.2521	I>> picked up	OUT	I>> picked up
023.2522	I> picked up	OUT	I> picked up
023.2523	Ip picked up	OUT	Ip picked up
023.2524	I> InRush PU	OUT	I> InRush picked up
023.2525	Ip InRush PU	OUT	Ip InRush picked up
023.2526	L1 InRush PU	OUT	Phase L1 InRush picked up
023.2527	L2 InRush PU	OUT	Phase L2 InRush picked up
023.2528	L3 InRush PU	OUT	Phase L3 InRush picked up
023.2531	L1 InRush det.	OUT	Phase L1 InRush detected
023.2532	L2 InRush det.	OUT	Phase L2 InRush detected
023.2533	L3 InRush det.	OUT	Phase L3 InRush detected
023.2534	INRUSH X-BLK	OUT	Cross blk: PhX blocked PhY
023.2541	I>> Time Out	OUT	I>> Time Out
023.2542	I> Time Out	OUT	I> Time Out
023.2543	Ip Time Out	OUT	Ip Time Out
023.2551	I>> TRIP	OUT	I>> TRIP
023.2552	I> TRIP	OUT	I> TRIP
023.2553	Ip TRIP	OUT	Ip TRIP

2.4.3 Time Overcurrent Protection for Residual Current

The function and operation of the definite-time overcurrent protection and of the inverse-time overcurrent protection for residual current is discussed in detail in the section „Time Overcurrent Protection - General“ above (see subsection 2.4.1). The following paragraphs contain the specific information for setting the overcurrent protection for residual current **3IO 0/C**.

2.4.3.1 Setting Notes

General

Note

The first time overcurrent protection for residual current is described in the setting instructions. The parameter addresses and message numbers of the second and third time overcurrent protection are described at the end of the setting instructions under „Additional Time Overcurrent Protection Functions for Residual Current“.

During configuration of the functional scope (section 2.1.3) the characteristic type for the residual current stages is determined under address 122 **DMT/IDMT 3IO**. Only the settings for the characteristic selected can be performed here. The definite time stages 3I0>> and 3I0> are available in all cases.

If a second or third residual overcurrent protection is used, this must be configured accordingly in addresses 134 **DMT/IDMT 3IO 2** and 136 **DMT/IDMT 3IO 3**.

Each protection function must be assigned to a side of the main protected object or another 3-phase current measuring location. This can be carried out separately from the phase overcurrent protection (section 2.1.4 under margin heading „Additional Three-phase Protection Functions“). Consider also the assignment of the measured current inputs of the device against the measuring locations (current transformer sets) of the power plant (section 2.1.4 under margin heading „Assignment of 3-phase Measuring Locations“).

Note

Note: If the time overcurrent protection is assigned to a side of the main protected object, the current values are set referred to the rated current of that side I/I_{NS}. In other cases, current values are set in amps.

In address 2201 **3IO 0/C**, the time overcurrent protection for residual current can be set to ***ON*** or ***OFF***. The option ***Block relay*** allows to operate the protection but the trip output relay is blocked.

Address 2208A **3IO MAN. CLOSE** determines which of the zero sequence current stages must be activated instantaneously with a detected manual close. Settings ***3IO>> instant.*** and ***3IO> instant.*** can be set independently from the selected type characteristics; ***3IOp instant.*** is only possible if one of the inverse time stages has been configured. The stabilisation does not affect **3IO>>**. This parameter can only be set with DIGSI at **Additional Settings**. For this setting, similar considerations apply as for the phase current stages.

In address 2202 **InRushRest. 3I0** inrush restraint (inrush restraint with 2nd harmonic) is enabled or disabled. Set ***ON*** if the residual current stage of the time overcurrent protection is applied at the supply side of a transformer whose starpoint is earthed. Otherwise, retain setting ***OFF***. If you set a very small pickup value, consider that the inrush restraint function cannot operate below 10 % nominal current (lower limit of harmonic filtering).

High Set Current Stage 3I0>>

If stage **3I0>>** (address 2211 or 2212) is combined with the 3I0> stage or the 3I0p stage, a two-stage characteristic will be the result. If one stage is not required, the pickup value has to be set to ∞. Stage **3I0>>** always operates with a defined delay.

If the protected winding is not earthed, zero sequence current only emerges due to an inner earth fault or double earth fault with one inner base point. Here, the 3I0>> stage is usually not required.

The 3I0>> stage can, for example, be applied for current grading. Please note that the zero sequence system of currents is of importance. For transformers with separate windings, zero sequence systems are usually kept separate (exception: bilateral starpoint earthing or earthed auto-transformer).

Inrush currents can only be created in zero sequence systems if the starpoint of the respective winding is earthed. If the fundamental exceeds the setting value, the inrush currents are rendered harmless by delay times (address 2213 **T 3I0>>**).

„Reverse Interlocking“ is only sensible if the respective winding is earthed. In that case, the multi-stage function of the time overcurrent protection is beneficial: For example, stage **3I0>>** is used as fast busbar protection with a short safety delay **T 3I0>>** (e.g. 50 ms). Stage **3I0>>** is blocked for faults at the outgoing feeders. Stages **3I0>** or **3I0p** serve as backup protection. The pickup values of both elements (**3I0>** or **3I0p** and **3I0>>**) are set equal. Delay time **T 3I0>** or **T 3I0p** (IEC characteristic) or **D 3I0p** (ANSI characteristic) is set in such manner that it overgrades the delay for the outgoing feeders. Here, the grading coordination chart for earth faults, which mostly allows shorter setting times, is of primary importance.

The set time **T 3I0>>**is an additional delay time and does not include the operating time (measuring time, etc.). The delay can be set to ∞. If set to infinity, the pickup of this function will be indicated but the stage will not trip after pickup. If the pickup threshold is set to ∞, neither a pickup annunciation nor a trip is generated.

Definite Time Overcurrent Stage3I0>

The minimum appearing earth fault current is relevant for the setting of the time overcurrent stage **3I0>** (address 2214 or 2215). Please note that, in case of various measuring locations, higher measuring tolerance may occur due to summation errors.

The time delay to be set (parameter 2216 **T 3I0>**) is derived from the grading coordination chart created for the network. For earth currents with earthed network, a separate grading coordination chart with shorter delay times can be set up. If you set a very small pickup value, it must be taken into consideration that the inrush restraint function cannot operate below 10 % nominal current (lower limit of harmonic filtering). An adequate time delay could be reasonable if inrush restraint is used.

The set time is an additional delay time and does not include the operating time (measuring time, etc.). The delay can also be set to ∞. If set to infinity, the pickup of this function will be indicated but the stage will not trip after pickup. If the pickup threshold is set to ∞, neither a pickup annunciation nor a trip is generated.

Inverse Time Overcurrent Stage3I0p with IEC Characteristics

The inverse time stage, depending on the configuration of the functional scope, address 122 (see 2.1.3.1), enables the user to select different characteristics.

With the IEC characteristics (address 122 **DMT/IDMT 3IO** = ***TOC IEC***) the following options are available at address 2226 **IEC CURVE**:

- ***Normal Inverse*** (inverse, type A according to IEC 60255-3),
- ***Very Inverse*** (very inverse, type B according to IEC 60255-3),
- ***Extremely Inv.*** (extremely inverse, type C according to IEC 60255-3), and
- ***Long Inverse*** (longtime, type B according to IEC 60255-3).

The characteristics and the equations on which they are based, are listed in the „Technical Data“.

If the inverse time trip characteristic is selected, it must be noted that a safety factor of about 1.1 has already been included between the pickup value and the setting value. This means that a pickup will only occur if a current of about 1.1 times the setting value is present.

The current value is set under address 2221 or 2222 **3IOp**. The most relevant for this setting is the minimum appearing earth fault current. Please note that, in case of various measuring locations, higher measuring tolerance may occur due to summation errors.

The corresponding time multiplier is accessible via address 2223 **T 3IOp**. This has to be coordinated with the grading coordination chart of the network. For earth currents with earthed network, you can mostly set up a separate grading coordination chart with shorter delay times. If you set a very small pickup value, consider that the inrush restraint function cannot operate below 10 % nominal current (lower limit of harmonic filtering). An adequate time delay could be reasonable if inrush restraint is used.

The time multiplier can also be set to ∞. If set to infinity, the pickup of this function will be indicated but the stage will not trip after pickup. If the Ip stage is not required at all, select address 122 **DMT/IDMT 3IO** = ***Definite Time*** when configuring the protection functions.

If under address 2225 **TOC DROP-OUT** the ***Disk Emulation*** is set, dropout is produced according to the dropout characteristic, as described in subsection „Dropout Behaviour“.

Inverse Time Overcurrent Stage 3I0p with ANSI Characteristics

The inverse time stage, depending on the configuration of the functional scope, address 122 (see 2.1.3.1), enables the user to select different characteristics.

With the ANSI characteristics (address 122 **DMT/IDMT 3IO** = ***TOC ANSI***) the following is made available in address 2227 **ANSI CURVE**:

- ***Definite Inv.***,
- ***Extremely Inv.***,
- ***Inverse***,
- ***Long Inverse***,
- ***Moderately Inv.***,
- ***Short Inverse***, and
- ***Very Inverse***.

The characteristics and the formulas on which they are based, are listed in the „Technical Data“.

If the inverse time trip characteristic is selected, please note that a safety factor of about 1.1 has already been included between the pickup value and the setting value.

This means that a pickup will only occur if a current of about 1.1 times the setting value is present.

The current value is set in address 2221 or 2222 **3I0p**. The most relevant for this setting is the minimum appearing earth fault current. Please consider that measuring tolerances may be higher with multiple measuring locations due to summation errors.

The corresponding time multiplier is set in address 2224 **D 3I0p**. This has to be coordinated with the grading coordination chart of the network. For earth currents with earthed network, you can mostly set up a separate grading coordination chart with shorter delay times.

If you set a very small pickup value, consider that the inrush restraint function cannot operate below 10 % nominal current (lower limit of harmonic filtering). An adequate time delay could be reasonable if inrush restraint is used.

The time multiplier can also be set to ∞. If set to infinity, the pickup of this function will be indicated but the stage will not trip after pickup. If the 3I0p stage is not required at all, select address 122 **DMT/IDMT 3IO** = ***Definite Time*** during configuration of the protection function.

If under address 2225 **TOC DROP-OUT** the ***Disk Emulation*** is set, a dropout in accordance with the dropout characteristic occurs, as described in section „Dropout Behaviour“

Dynamic Cold Load Pickup

An alternative set of pickup values can be set for each stage. It may be selected automatically in a dynamic manner during operation. The following alternative values are set for the stages here (section 2.6).

for definite time overcurrent protection 3I0:

- address 2311 or 2312 for pickup value **3I0>>**,
- address 2313 for delay time **T 3I0>>**,
- address 2314 or 2315 for pickup value **3I0>**,
- address 2316 for delay time **T 3I0>**,

for inverse time overcurrent protection 3I0 acc. to IEC characteristics:

- address 2321 or 2322 for pickup value **3I0p**,
- address 2323 for time multiplier **T 3I0p**;

for inverse time overcurrent protection 3I0 acc. to ANSI characteristics:

- address 2321 or 2322 for pickup value **3I0p**,
- address 2324 for time multiplier **D 3I0p**;

User-Defined Curves

For inverse time overcurrent protection the user may define his own tripping and dropout characteristic. For configuration in DIGSI a dialogue box appears. Enter up to 20 pairs of current and tripping time values.

The procedure is the same as for „Phase Current Stages“ under „User-specific Characteristics“ (see section 2.4.2.1).

To create a user defined tripping characteristic, the following must have been set for configuration of the scope of functions: address 122 **DMT/IDMT 3IO** the option ***User Defined PU***. Should you also wish to specify the dropout characteristic, select option ***User def. Reset***.

Inrush Restraint

At address 2202 **InRushRest. 3IO** of the general settings, the inrush restraint can be enabled (***ON***) or disabled (***OFF***). Especially for transformers and if overcurrent time

protection is activated on the earthed supply side, this inrush restraint is required. Function parameters of the inrush restraint are set in „Inrush“.

The inrush restraint is based on the evaluation of the 2nd harmonic present in the inrush current. The ratio of 2nd harmonics to the fundamental component **2.HARM. 3I0** (address 2241) is set to I_{2fN}/I_{fN} = 15 % as default setting. It can be used without being changed. To provide more restraint in exceptional cases, where energising conditions are particularly unfavourable, a smaller value can be set in the above-mentioned address.

If the current exceeds the value indicated in address 2242 or 2243 **I Max InRr. 3I0**, no restraint will be provoked by the 2nd harmonic.

Additional Time Overcurrent Protection Functions for Residual Current

In the aforegoing description, the respective first time overcurrent protection for residual current has been described. The differences in the parameter addresses and message numbers of the first, second and third time overcurrent protection are illustrated in the following table. The positions marked by x are identical.

	Addresses of the parameters	Addresses of the dynamic parameters	Message no.
1st time overcurrent protection for residual current	22xx	23xx	191.xxxx(.01)
2nd time overcurrent protection for residual current	34xx	35xx	321.xxxx(.01)
3rd time overcurrent protection for residual current	36xx	37xx	323.xxxx(.01)

Note

If the time overcurrent protection is assigned to a side of the main protected object, the current values are set referred to the rated current of that side II/I_{NS}.

2.4.3.2 Settings

Addresses which have an appended "A" can only be changed with DIGSI, under Additional Settings.

The table indicates region-specific presettings. Column C (configuration) indicates the corresponding secondary nominal current of the current transformer.

Addr.	Parameter	C	Setting Options	Default Setting	Comments
2201	3I0 O/C		ON OFF Block relay	OFF	3I0 Time Overcurrent
2202	InRushRest. 3I0		ON OFF	OFF	InRush Restrained O/C 3I0
2208 A	3I0 MAN. CLOSE		3I0>> instant. 3I0> instant. 3I0p instant. Inactive	3I0>> instant.	O/C 3I0 Manual Close Mode

Addr.	Parameter	C	Setting Options	Default Setting	Comments
2211	3I0>>	1A	0.05 .. 35.00 A; ∞	1.00 A	3I0>> Pickup
		5A	0.25 .. 175.00 A; ∞	5.00 A	
2212	3I0>>		0.05 .. 35.00 I/InS; ∞	1.00 I/InS	3I0>> Pickup
2213	T 3I0>>		0.00 .. 60.00 sec; ∞	1.50 sec	T 3I0>> Time Delay
2214	3I0>	1A	0.05 .. 35.00 A; ∞	0.40 A	3I0> Pickup
		5A	0.25 .. 175.00 A; ∞	2.00 A	
2215	3I0>		0.05 .. 35.00 I/InS; ∞	0.40 I/InS	3I0> Pickup
2216	T 3I0>		0.00 .. 60.00 sec; ∞	2.00 sec	T 3I0> Time Delay
2221	3I0p	1A	0.05 .. 4.00 A	0.40 A	3I0p Pickup
		5A	0.25 .. 20.00 A	2.00 A	
2222	3I0p		0.05 .. 4.00 I/InS	0.40 I/InS	3I0p Pickup
2223	T 3I0p		0.05 .. 3.20 sec; ∞	0.50 sec	T 3I0p Time Dial
2224	D 3I0p		0.50 .. 15.00 ; ∞	5.00	D 3I0p Time Dial
2225	TOC DROP-OUT		Instantaneous Disk Emulation	Disk Emulation	TOC Drop-out Characteristic
2226	IEC CURVE		Normal Inverse Very Inverse Extremely Inv. Long Inverse	Normal Inverse	IEC Curve
2227	ANSI CURVE		Very Inverse Inverse Short Inverse Long Inverse Moderately Inv. Extremely Inv. Definite Inv.	Very Inverse	ANSI Curve
2231	I/I0p PU T/TI0p		1.00 .. 20.00 I/Ip; ∞ 0.01 .. 999.00 TD		Pickup Curve 3I0/3I0p - T3I0/T3I0p
2232	MofPU ResT/TI0p		0.05 .. 0.95 I/Ip; ∞ 0.01 .. 999.00 TD		Multiple of Pickup <-> T3I0/T3I0p
2241	2.HARM. 3I0		10 .. 45 %	15 %	2nd harmonic O/C 3I0 in % of fundamental
2242	I Max InRr. 3I0	1A	0.30 .. 25.00 A	7.50 A	Maximum Current for Inr. Rest. O/C 3I0
		5A	1.50 .. 125.00 A	37.50 A	
2243	I Max InRr. 3I0		0.30 .. 25.00 I/InS	7.50 I/InS	Maximum Current for Inr. Rest. O/C 3I0
2311	3I0>>	1A	0.05 .. 35.00 A; ∞	7.00 A	3I0>> Pickup
		5A	0.25 .. 175.00 A; ∞	35.00 A	
2312	3I0>>		0.05 .. 35.00 I/InS; ∞	7.00 I/InS	3I0>> Pickup
2313	T 3I0>>		0.00 .. 60.00 sec; ∞	1.50 sec	T 3I0>> Time Delay
2314	3I0>	1A	0.05 .. 35.00 A; ∞	1.50 A	3I0> Pickup
		5A	0.25 .. 175.00 A; ∞	7.50 A	
2315	3I0>		0.05 .. 35.00 I/InS; ∞	1.50 I/InS	3I0> Pickup
2316	T 3I0>		0.00 .. 60.00 sec; ∞	2.00 sec	T 3I0> Time Delay

Addr.	Parameter	C	Setting Options	Default Setting	Comments
2321	3I0p	1A	0.05 .. 4.00 A	1.00 A	3I0p Pickup
		5A	0.25 .. 20.00 A	5.00 A	
2322	3I0p		0.05 .. 4.00 I/InS	1.00 I/InS	3I0p Pickup
2323	T 3I0p		0.05 .. 3.20 sec; ∞	0.50 sec	T 3I0p Time Dial
2324	D 3I0p		0.50 .. 15.00 ; ∞	5.00	D 3I0p Time Dial

2.4.3.3 Information List

No.	Information	Type of Information	Comments
191.2404	>BLK 3I0 O/C	SP	>BLOCK 3I0 time overcurrent
191.2411	O/C 3I0 OFF	OUT	Time Overcurrent 3I0 is OFF
191.2412	O/C 3I0 BLK	OUT	Time Overcurrent 3I0 is BLOCKED
191.2413	O/C 3I0 ACTIVE	OUT	Time Overcurrent 3I0 is ACTIVE
191.2425	O/C 3I0 PU	OUT	Time Overcurrent 3I0 picked up
191.2491	O/C 3I0 Not av.	OUT	O/C 3I0: Not available for this object
191.2501	>BLK 3I0O/C Inr	SP	>BLOCK time overcurrent 3I0 InRush
191.2502	>BLOCK 3I0>>	SP	>BLOCK 3I0>> time overcurrent
191.2503	>BLOCK 3I0>	SP	>BLOCK 3I0> time overcurrent
191.2504	>BLOCK 3I0p	SP	>BLOCK 3I0p time overcurrent
191.2514	3I0>> BLOCKED	OUT	3I0>> BLOCKED
191.2515	3I0> BLOCKED	OUT	3I0> BLOCKED
191.2516	3I0p BLOCKED	OUT	3I0p BLOCKED
191.2521	3I0>> picked up	OUT	3I0>> picked up
191.2522	3I0> picked up	OUT	3I0> picked up
191.2523	3I0p picked up	OUT	3I0p picked up
191.2524	3I0> InRush PU	OUT	3I0> InRush picked up
191.2525	3I0p InRush PU	OUT	3I0p InRush picked up
191.2529	3I0 InRush PU	OUT	3I0 InRush picked up
191.2541	3I0>> Time Out	OUT	3I0>> Time Out
191.2542	3I0> Time Out	OUT	3I0> Time Out
191.2543	3I0p TimeOut	OUT	3I0p Time Out
191.2551	3I0>> TRIP	OUT	3I0>> TRIP
191.2552	3I0> TRIP	OUT	3I0> TRIP
191.2553	3I0p TRIP	OUT	3I0p TRIP

2.5 Time Overcurrent Protection for Earth Current

2.5.1 General

The time overcurrent protection for earth current is assigned to a 1-phase measured current input of the device. It can be used for any desired single-phase application. Its preferred application is the detection of an earth current between the starpoint of a protective object and its earth electrode (that's why the description). The corresponding one-phase additional measuring input has to be correctly assigned to the one-phase current transformer of the power plant.

This protection can be used in addition to the restricted earth fault protection (Section 2.3). Then it forms the backup protection for earth faults outside the protected zone which are not cleared there.

The time overcurrent protection for earth current provides two definite time stages (O) and one inverse time stage (C). The latter may operate according to an IEC or an ANSI, or a user defined characteristic.

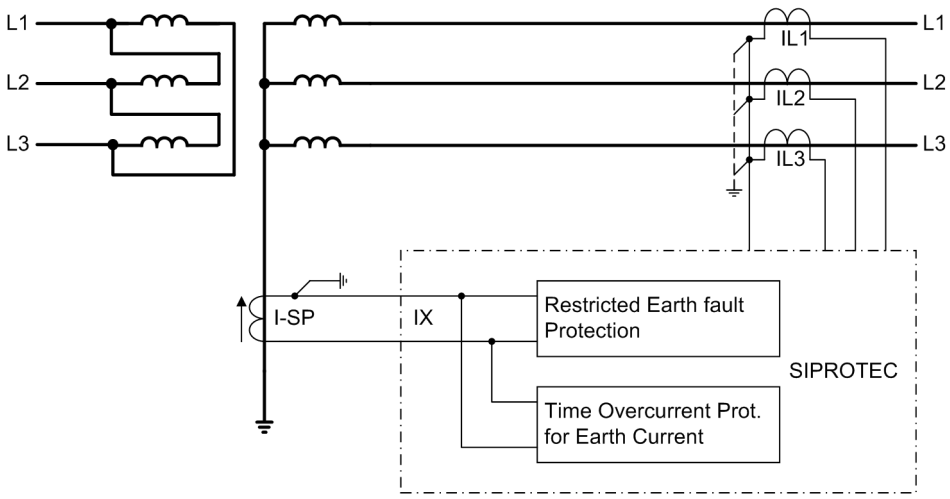

Figure 2-77 Time overcurrent protection as backup protection for restricted earth fault protection

7UT613/63x is provided with two overcurrent functions for earth current, where each can be used independent of each other at different locations. Assigning the different protective functions to the one-phase measuring locations are according to Section „Assigning the protective function to the measuring locations/sides“ performed.

2.5.2 Definite Time, Instantaneous Overcurrent Protection (UMZ)

The definite time stages (O) for earth current are always available even if an inverse time characteristic has been configured in the scope of functions (see Subsection 2.1.3.1).

Pickup, Trip

Two definite time stages are available for the earth current.

For the IE>> stage, the current measured at the assigned 1-phase current input is compared with the setting value **IE>>**. Current above the pickup value is detected and annunciated. When the delay time **T IE>>** has expired, tripping command is issued. The reset value is approximately 95 % below the pickup value for currents above I_N. Lower values require a higher hysteresis in order to avoid intermittent pickup on currents near the pickup value (e.g. 20 % at 0.1 $\cdot I_N$).

The following figure shows the logic diagram for the high-current stage **IE>>**.

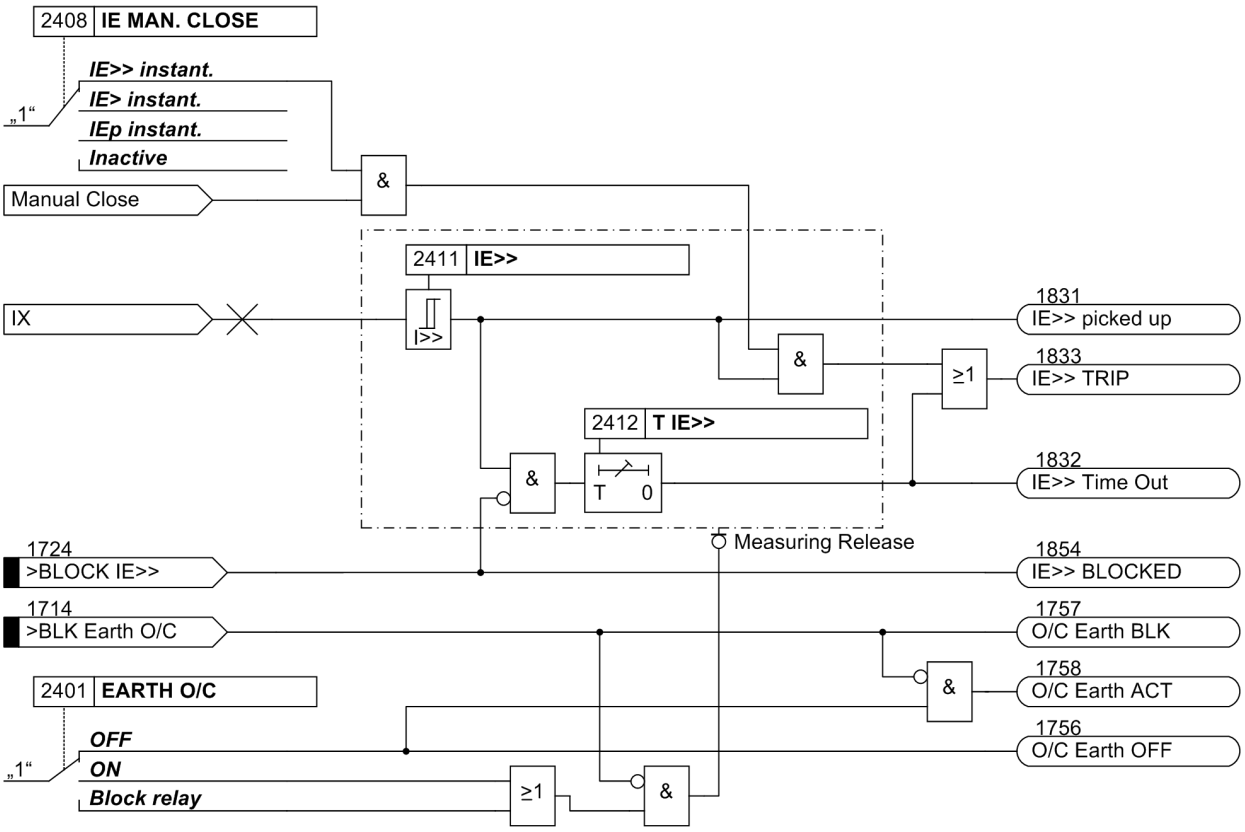

Figure 2-78 Logic diagram of the high-current stage I_E>> for earth current (simplified)

The current detected at the assigned one-phase current measuring input is additionally compared with setting value **IE>**. An annunciation is generated if the value is exceeded. If inrush restraint is used, a frequency analysis is performed first. If an inrush condition is detected, pickup annunciation is suppressed and an inrush message is output instead. If there is no inrush or if inrush restraint is disabled, a tripping command will be output after expiration of delay time **T IE>**. If inrush restraint is enabled and inrush current is detected, there will be no tripping. Nevertheless, an annunciation is generated indicating that the time expired. The dropout value is roughly equal to 95% of the pickup value for currents $I > 0{,}3 \cdot I_N$.

The Figure shows the logic diagram of the overcurrent stage **IE>**.

The pickup values for each of the stages **IE>** and **IE>>** and the delay times can be set individually.

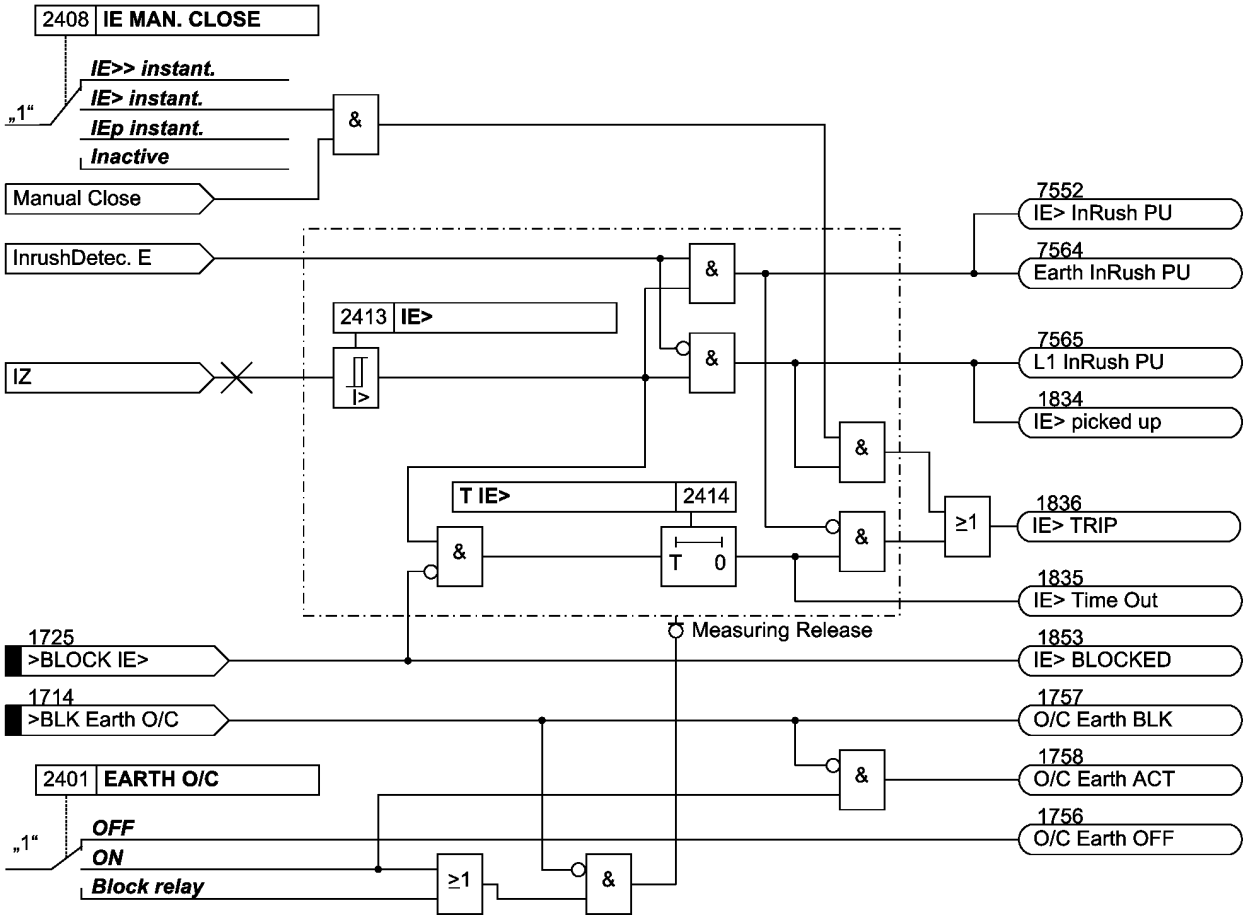

Figure 2-79 Logic diagram of the overcurrent stage I_E> for earth current (simplified)

2.5.3 Inverse Time Overcurrent Protection

The inverse time overcurrent stage operates with a characteristic either according to the IEC- or the ANSI-standard or to a user-defined characteristic. The characteristics and their equations are given in the „Technical Data“. When configuring one of the inverse time characteristics, definite time stages **IE>>** and **IE>** are also enabled.

Pickup, Trip

The current measured at the assigned 1-phase current input is compared with setting value **IEp**. If the current exceeds 1.1 times the set value, the stage picks up and an annunciation is made. If inrush restraint is used, a frequency analysis is performed first. If an inrush condition is detected, pickup annunciation is suppressed and an inrush message is output instead. The RMS value of the fundamental is used for the pickup. During the pickup of an I_{Ep} stage, the tripping time is calculated from the flowing fault current by means of an integrating measuring procedure, depending on the selected tripping characteristic. After expiration of this time period, a trip command is output as long as no inrush current is detected or inrush restraint is disabled. If inrush restraint is enabled and inrush current is detected, there will be no tripping. Nevertheless, an annunciation is generated indicating that the time expired.

The following figure shows the logic diagram of the inverse-time overcurrent protection function.

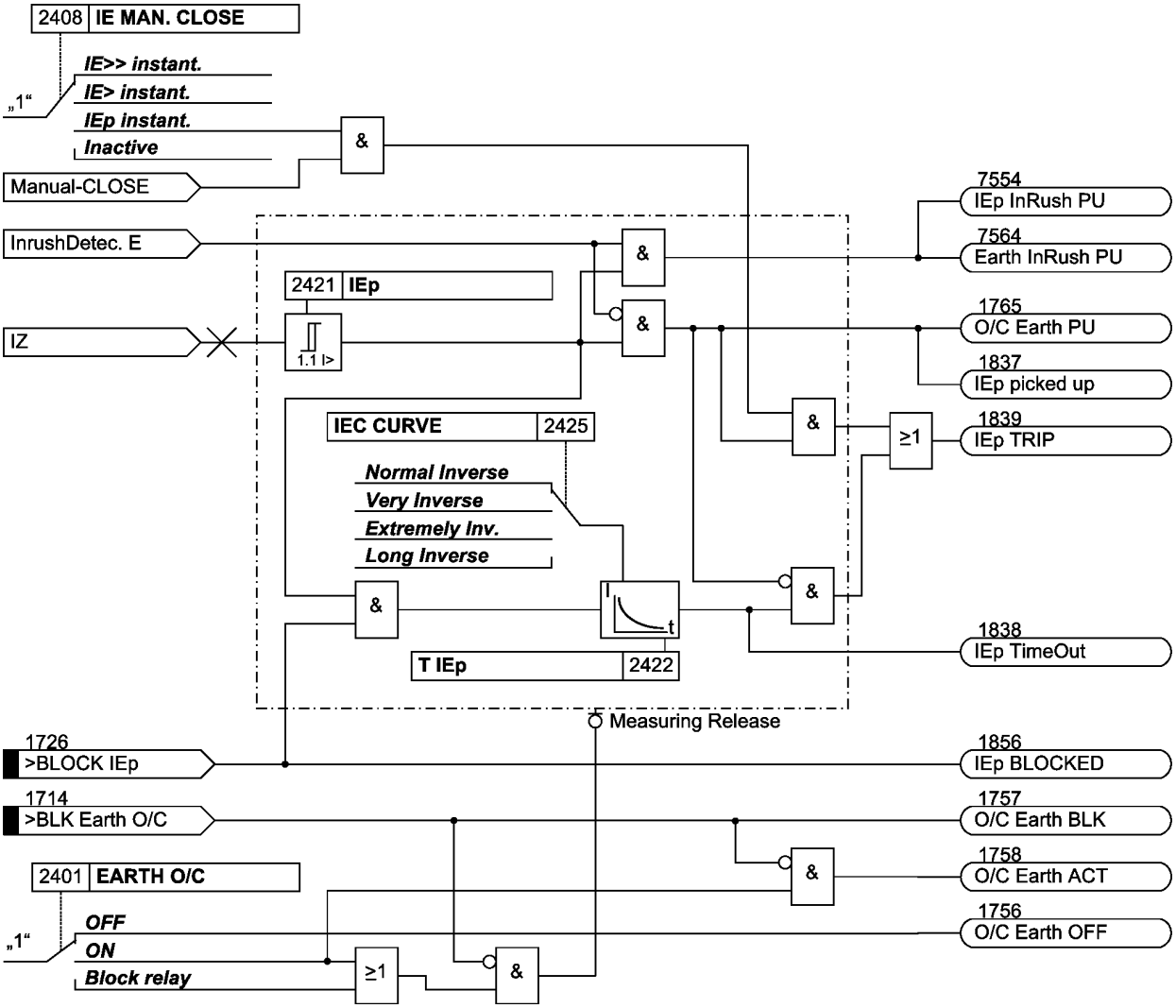

Figure 2-80 Logic Diagram of the Inverse Overcurrent Protection for Earth Currents — example of IEC characteristic (simplified)

Dropout

You can determine whether the dropout of the stage is to follow right after the threshold undershot or whether it is evoked by disk emulation. "Right after" means that the pickup drops out when approx. 95 % of the set pickup value is undershot. For a new pickup the time counter starts at zero.

The disk emulation evokes a dropout process (time counter is decrementing) which begins after de-energisation. This process corresponds to the back turn of a Ferraris-disk (explaining its denomination „disk emulation“). In case several faults occur successively, it is ensured that due to the inertia of the Ferraris disk the „history“ is taken into consideration and the time behaviour is adapted. Reset begins as soon as 90 % of the setting value is undershot, in accordance with the dropout curve of the selected characteristic. In the range between the dropout value (95 % of the pickup value) and 90 % of the setting value, the incrementing and the decrementing process is in idle state. If 5 % of the setting value is undershot, the dropout process is completed, i.e. when a new pickup occurs, the timer starts again at zero.

The disk emulation offers its advantages when the grading coordination chart of the time overcurrent protection is combined with other devices (on electro-mechanical or induction base) connected to the system.

User-defined Characteristics

When user-defined curves are utilised, the tripping curve may be defined point by point. Up to 20 pairs of values (current, time) may be entered. The device then approximates the characteristics by linear interpolation.

If required, the dropout characteristic can also be defined (see function description for „Dropout“. If no user-configurable dropout characteristic is desired, dropout is initiated when approx. a 95 % of the pickup value is undershot; when a new pickup is evoked, the timer starts again at zero.

2.5.4 Manual Close Command

When a circuit breaker is closed onto a faulted protective object, a high speed re-trip by the breaker is often desired. The manual closing feature is designed to remove the delay from one of the time overcurrent stages when the breaker is manually closed onto a fault. The time delay is then bypassed via an impulse from the external control switch. This pulse is prolonged by at least 300 ms. To enable the device to react properly on occurrence of a fault, address 2408A **IE MAN. CLOSE** have to be set accordingly.

Processing of the manual close command can be executed for each measuring location or side. Manual close signal is also generated when an internal control command is given to a breaker which is assigned to the same protection function as the time earth overcurrent protection, in the Power System Data 1 (subsection 2.1.4).

Strict attention must be paid that the manual close condition is derived from **that** circuit breaker which feeds the object that is protected by the earth overcurrent protection!

2.5.5 Dynamic Cold Load Pickup

Dynamic changeover of pickup values is available also for time overcurrent protection for earth current as it is for the time overcurrent protection for phase currents and zero sequence current. Processing of the dynamic cold load pickup conditions is the same for all time overcurrent stages, and is explained in Section 2.6.

The alternative values themselves are individually set for each of the stages.

2.5.6 Inrush Restraint

Earth current time overcurrent protection provides an integrated inrush restraint function which blocks the overcurrent stages

If the second harmonic content of the earth current exceeds a selectable threshold, tripping is blocked.

The inrush stabilisation has an upper limit: If a certain (adjustable) current value is exceeded, it will not be effective any more, since it must then be an internal current-intensive short-circuit. The lower limit is the operating limit of the harmonic filter (0.1 I_N).

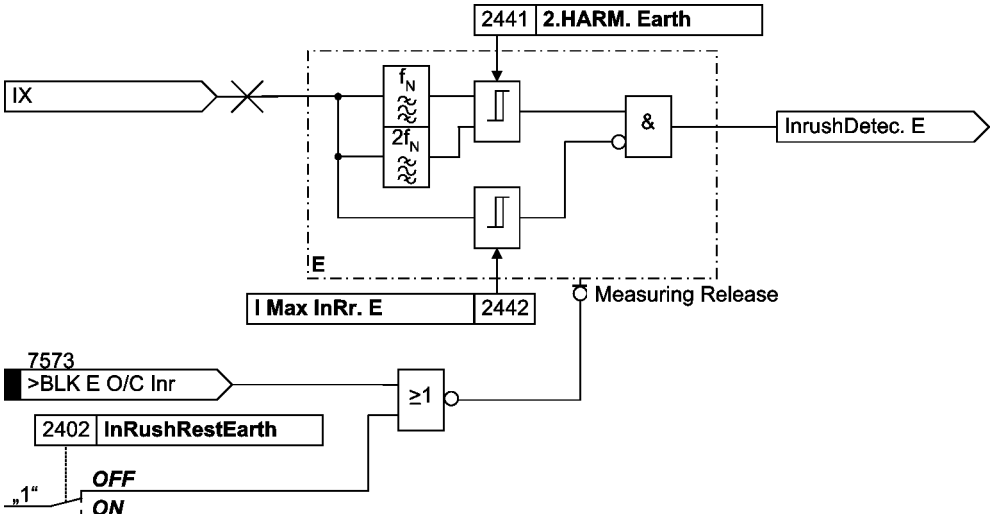

Figure 2-81 Logic diagram of the inrush restraint feature (simplified)

2.5.7 Setting Notes

General

Note

The first time overcurrent protection for earth current is described in the setting instructions. The parameter addresses and message numbers of the second and third time overcurrent protection are described at the end of the setting instructions under „Additional Time Overcurrent Protection Functions for Earth Current“.

During configuration of the functional scope, the characteristic type has been set in address 124. Only the settings for the characteristic selected can be performed here. The definite time stages **IE>>** and **IE>** are always available.

If a second overcurrent protection is used, it also needs to be set at address 138 **DMT/IDMT Earth2** and must be configured accordingly.

The overcurrent protection for earth current is assigned to a 1-phase current measuring input (section 2.1.4 under margin heading „Additional 1-phase Protection Functions“). Consider also the assignment of the 1-phase current input of the device against the current transformer of the power plant (section 2.1.4 under margin heading „Assignment of Auxiliary 1-phase Measuring Locations“).

At address 2401 **EARTH O/C**, time overcurrent protection for earth current can be set to ***ON*** or ***OFF***. The option (***Block relay***) allows to operate the protection function but the trip output relay is blocked.

Address 2408 **IE MAN. CLOSE** determines which earth current stage is to be activated instantaneously with a detected manual close. Settings ***IE>> instant.*** and ***IE> instant.*** can be set independently from the selected type characteristics;***IEp instant.*** is only available if one of the inverse time stages is configured. This parameter can only be altered in DIGSI at **Additional Settings**.

If time overcurrent protection is applied on the feeding side of a transformer, select the higher stage **IE>>**, which does not pick up by the inrush current or set the manual close feature to ***Inactive***.

At address 2402 **InRushRestEarth** inrush restraint (inrush restraint with 2nd harmonic) is enabled or disabled. Set ***ON*** if the protection is applied at the feeding side of an earthed transformer. Otherwise, retain setting ***OFF***.

High-set Stage I_E>>

The **IE>>** stage (address 2411), combined with the IE> stage or the IEp stage, results in a two-stage characteristic. If this stage is not required, the pickup value shall be set to ∞. The **IE>>** stage always operates with a defined delay time.

This current and time setting shall exclude pickup during switching operations. With a certain degree, current grading can also be achieved similar to the corresponding stages of the time overcurrent protection for phase and residual currents. However, zero sequence system quantities must be taken into consideration.

In most cases this stage operates instantaneously. A time delay, however, can be achieved by setting address 2412 **T IE>>**.

The set time is an additional delay time and does not include the operating time (measuring time, etc.). The delay can be set to ∞. If set to infinity, the pickup of this function will be indicated but the stage will not trip after pickup. If the pickup threshold is set to ∞, neither a pickup annunciation nor a trip is generated.

Definite Time Overcurrent Stage I_E>

Using the time overcurrent stage **IE>** (address 2413), earth faults can also be detected with weak fault currents. Since the starpoint current originates from one single current transformer, it is not affected by summation effects evoked by different current transformer errors like, for example, the zero sequence current derived from phase currents. Therefore, this address can be set to very sensitive. Consider that the inrush restraint function cannot operate below 10 % nominal current (lower limit of harmonic filtering). An adequate time delay could be reasonable for very sensitive setting if inrush restraint is used.

Since this stage also picks up with earth faults in the network, the time delay (address 2414 **T IE>**) has to be coordinated with the grading coordination chart of the network for earth faults. In most cases, shorter tripping times than for phase currents may be set since a galvanic separation of the zero sequence systems of the connected power system sections is ensured by a transformer with separate windings.

The set time is an additional delay time and does not include the operating time (measuring time, etc.). The delay can be set to ∞. If set to infinity, the pickup of this function will be indicated but the stage will not trip after pickup. If the pickup threshold is set to ∞, neither a pickup annunciation nor a trip is generated.

Overcurrent Stage I_{Ep} with IEC curves

The inverse time stage, depending on the configuration, enables the user to select different characteristics. In case of IEC characteristics (address 124 **DMT/IDMT Earth** = ***TOC IEC***) the following options are available at address 2425 **IEC CURVE**:

- ***Normal Inverse*** (inverse, type A according to IEC 60255-3),
- ***Very Inverse*** (very inverse, type B according to IEC 60255-3),
- ***Extremely Inv.*** (extremely inverse, type C according to IEC 60255-3), and
- ***Long Inverse*** (longtime, type B according to IEC 60255-3).

The characteristics and the equations on which they are based, are listed in the „Technical Data“.

If the inverse time trip characteristic is selected, it must be noted that a safety factor of about 1.1 has already been included between the pickup value and the setting value. This means that a pickup will only occur if a current of about 1.1 times of the setting value is present.

Using the overcurrent stage **IEp** (address 2421) earth faults can also be detected with weak fault currents. Since the starpoint current originates from one single current transformer, it is not affected by summation effects evoked by different current transformer errors like, for example, the zero sequence current derived from phase currents. Therefore, this address can be set to very sensitive. Consider that the inrush restraint function cannot operate below 10 % nominal current (lower limit of harmonic filtering). An adequate time delay could be reasonable for very sensitive setting if inrush restraint is used.

Since this stage also picks up with earth faults in the network, the time multiplier (address 2422 **T IEp**) has to be coordinated with the grading coordination chart of the network for earth faults. In most cases, shorter tripping times than for phase currents may be set since a galvanic separation of the zero sequence systems of the connected power system sections is ensured by a transformer with separate windings.

The time multiplication factor may also be set to ∞. If set to infinity, the pickup of this function will be indicated but the stage will not trip after pickup. If the **IEp**–stage is not required, select address 124 **DMT / IDMT Earth** = ***Definite Time*** when configuring the protection functions.

If under address 2424 **TOC DROP-OUT** the ***Disk Emulation*** are set, dropout is produced in accordance with the dropout characteristic, as set out in the functional description of the inverse time overcurrent protection under margin heading „Dropout Behaviour“.

Overcurrent Stage I_{Ep} with ANSI Characteristics

The inverse time stage, depending on the configuration, enables the user to select different characteristics. With the ANSI characteristics (address 124 **DMT / IDMT Earth** = ***TOC ANSI***) the following is made available in address 2426 **ANSI CURVE**:

- ***Definite Inv.***,
- ***Extremely Inv.***,
- ***Inverse***,
- ***Long Inverse***,
- ***Moderately Inv.***,
- ***Short Inverse***, and
- ***Very Inverse***.

The characteristics and equations they are based on are listed in the „Technical Data“.

If the inverse time trip characteristic is selected, it must be noted that a safety factor of about 1.1 has already been included between the pickup value and the setting value. This means that a pickup will only occur if a current of about 1.1 times the setting value is present.

Using the time overcurrent stage **IEp** (address 2421) earth faults can also be detected with weak fault currents. Since the starpoint current originates from one single current transformer, it is not affected by summation effects evoked by different current transformer errors like, for example, the zero sequence current derived from phase currents. Therefore, this address can be set to very sensitive. Consider that the inrush restraint function cannot operate below 10 % nominal current (lower limit of harmonic filtering). An adequate time delay could be reasonable for very sensitive setting if inrush restraint is used.

Since this stage also picks up with earth faults in the network, the time delay (address 2423 **D IEp**) has to be coordinated with the grading coordination chart of the network for earth faults. In most cases, shorter tripping times than for phase currents may be set since a galvanic separation of the zero sequence systems of the connected power system sections is ensured by a transformer with separate windings.

The time multiplier can also be set to ∞. If set to infinity, the pickup of this function will be indicated but the stage will not trip after pickup. If stage **IEp** is not required at all, select address 124 **DMT / IDMT Earth** = ***Definite Time*** during configuration of the protection functions.

If at address 2424 **TOC DROP-OUT** the ***Disk Emulation*** is set, dropout is thus produced in accordance with the dropout characteristic, as described under margin heading„ Dropout Behaviour“ in subsection 2.5.

Dynamic Cold Load Pickup

An alternative set of pickup values can be set for each stage. It may be selected automatically in a dynamic manner during operation. For more information on this function, see Section 2.6. For the stages the following alternative values are set here.

for definite time overcurrent protection I_E:

- address 2511 for pickup value **IE>>**,
- address 2512 for delay time **T IE>>**,
- address 2513 for pickup value **IE>**,
- address 2514 for delay time **T IE>**,

for inverse time overcurrent protection I_E acc. to IEC characteristics:

- address 2521 for pickup value **IEp**,
- address 2522 for time multiplier **T IEp**;

for inverse time overcurrent protection I_E acc. to ANSI characteristics:

- address 2521 for pickup value **IEp**,
- address 2523 for time multiplier **D IEp**;

User-Defined Curves

For inverse time overcurrent protection the user may define his own tripping and dropout characteristic. For configuration in DIGSI a dialogue box appears. Enter up to 20 pairs of current value and tripping time value.

The procedure is the same as for phase current stages. See subsection 2.4.2 under margin heading „User-Defined Curves“.

To create a user defined tripping characteristic for earth current, the following has to be set for configuration of the functional scope: address 124 **DMT / IDMT Earth**, option ***User Defined PU***. If you also want to specify the dropout characteristic, set option ***User def. Reset***.

Inrush Restraint

In address 2402 **InRushRestEarth** of the general settings, the inrush restraint can be enabled (***ON***) or disabled (***OFF***). This inrush restraint is only sensible for transformers and if overcurrent time protection is activated on the earthed feeding side. Function parameters of the inrush restraint are set in „Inrush“.

The inrush restraint is based on the evaluation of the 2nd harmonic present in the inrush current. The ratio of 2nd harmonics to the fundamental component **2.HARM. Earth** (address 2441) is set to $I2_{fN}/I_{fN}$ = **15** % as default setting. It can be used without being changed. To provide more restraint in exceptional cases, where energising conditions are particularly unfavourable, a smaller value can be set in the aforementioned address.

If the current exceeds the value indicated in address 2442 **I Max InRr. E**, no restraint will be provoked by the 2nd harmonic.

Additional Overcurrent Protection Functions for Earth Current

In the aforementioned description, the first overcurrent protection is described respectively. The differences in the parameter addresses and message numbers of the first and second overcurrent protection are illustrated in the following table. The positions marked by x are identical.

	Addresses of the parameters	Addresses of the dynamic parameters	Message no.
1. Overcurrent protection for earth current	24xx	25xx	024.xxxx(.01)
2. Overcurrent protection for earth current	38xx	39xx	325.xxxx(.01)

2.5.8 Settings

Addresses which have an appended "A" can only be changed with DIGSI, under Additional Settings.

The table indicates region-specific presettings. Column C (configuration) indicates the corresponding secondary nominal current of the current transformer.

Addr.	Parameter	C	Setting Options	Default Setting	Comments
2401	EARTH O/C		ON OFF Block relay	OFF	Earth Time Overcurrent
2402	InRushRestEarth		ON OFF	OFF	InRush Restrained O/C Earth
2408A	IE MAN. CLOSE		IE>> instant. IE> instant. IEp instant. Inactive	IE>> instant.	O/C IE Manual Close Mode
2411	IE>>	1A	0.05 .. 35.00 A; ∞	1.00 A	IE>> Pickup
		5A	0.25 .. 175.00 A; ∞	5.00 A	
2412	T IE>>		0.00 .. 60.00 sec; ∞	1.50 sec	T IE>> Time Delay
2413	IE>	1A	0.05 .. 35.00 A; ∞	0.40 A	IE> Pickup
		5A	0.25 .. 175.00 A; ∞	2.00 A	
2414	T IE>		0.00 .. 60.00 sec; ∞	2.00 sec	T IE> Time Delay
2421	IEp	1A	0.05 .. 4.00 A	0.40 A	IEp Pickup
		5A	0.25 .. 20.00 A	2.00 A	
2422	T IEp		0.05 .. 3.20 sec; ∞	0.50 sec	T IEp Time Dial
2423	D IEp		0.50 .. 15.00 ; ∞	5.00	D IEp Time Dial
2424	TOC DROP-OUT		Instantaneous Disk Emulation	Disk Emulation	TOC Drop-out Characteristic
2425	IEC CURVE		Normal Inverse Very Inverse Extremely Inv. Long Inverse	Normal Inverse	IEC Curve

Addr.	Parameter	C	Setting Options	Default Setting	Comments
2426	ANSI CURVE		Very Inverse Inverse Short Inverse Long Inverse Moderately Inv. Extremely Inv. Definite Inv.	Very Inverse	ANSI Curve
2431	I/IEp PU T/TEp		1.00 .. 20.00 I/Ip; ∞ 0.01 .. 999.00 TD		Pickup Curve IE/IEp - TIE/TIEp
2432	MofPU Res T/TEp		0.05 .. 0.95 I/Ip; ∞ 0.01 .. 999.00 TD		Multiple of Pickup <-> TI/TIEp
2441	2.HARM. Earth		10 .. 45 %	15 %	2nd harmonic O/C E in % of fundamental
2442	I Max InRr. E	1A	0.30 .. 25.00 A	7.50 A	Maximum Current for Inr. Rest. O/C Earth
		5A	1.50 .. 125.00 A	37.50 A	
2511	IE>>	1A	0.05 .. 35.00 A; ∞	7.00 A	IE>> Pickup
		5A	0.25 .. 175.00 A; ∞	35.00 A	
2512	T IE>>		0.00 .. 60.00 sec; ∞	1.50 sec	T IE>> Time Delay
2513	IE>	1A	0.05 .. 35.00 A; ∞	1.50 A	IE> Pickup
		5A	0.25 .. 175.00 A; ∞	7.50 A	
2514	T IE>		0.00 .. 60.00 sec; ∞	2.00 sec	T IE> Time Delay
2521	IEp	1A	0.05 .. 4.00 A	1.00 A	IEp Pickup
		5A	0.25 .. 20.00 A	5.00 A	
2522	T IEp		0.05 .. 3.20 sec; ∞	0.50 sec	T IEp Time Dial
2523	D IEp		0.50 .. 15.00 ; ∞	5.00	D IEp Time Dial

2.5.9 Information List

No.	Information	Type of Information	Comments
024.2404	>BLK Earth O/C	SP	>BLOCK Earth time overcurrent
024.2411	O/C Earth OFF	OUT	Time Overcurrent Earth is OFF
024.2412	O/C Earth BLK	OUT	Time Overcurrent Earth is BLOCKED
024.2413	O/C Earth ACT	OUT	Time Overcurrent Earth is ACTIVE
024.2425	O/C Earth PU	OUT	Time Overcurrent Earth picked up
024.2492	O/C Earth ErrCT	OUT	O/C Earth err.: No auxiliary CT assigned
024.2501	>BLK E O/C Inr	SP	>BLOCK time overcurrent Earth InRush
024.2502	>BLOCK IE>>	SP	>BLOCK IE>>
024.2503	>BLOCK IE>	SP	>BLOCK IE>
024.2504	>BLOCK IEp	SP	>BLOCK IEp
024.2514	IE>> BLOCKED	OUT	IE>> BLOCKED
024.2515	IE> BLOCKED	OUT	IE> BLOCKED
024.2516	IEp BLOCKED	OUT	IEp BLOCKED
024.2521	IE>> picked up	OUT	IE>> picked up

No.	Information	Type of Information	Comments
024.2522	IE> picked up	OUT	IE> picked up
024.2523	IEp picked up	OUT	IEp picked up
024.2524	IE> InRush PU	OUT	IE> InRush picked up
024.2525	IEp InRush PU	OUT	IEp InRush picked up
024.2529	Earth InRush PU	OUT	Earth InRush picked up
024.2541	IE>> Time Out	OUT	IE>> Time Out
024.2542	IE> Time Out	OUT	IE> Time Out
024.2543	IEp TimeOut	OUT	IEp Time Out
024.2551	IE>> TRIP	OUT	IE>> TRIP
024.2552	IE> TRIP	OUT	IE> TRIP
024.2553	IEp TRIP	OUT	IEp TRIP

2.6 Dynamic Cold Load Pickup for Time Overcurrent Protection

With the dynamic cold load pickup feature, it is possible to dynamically increase the pickup values of the time overcurrent protection stages when dynamic cold load overcurrent conditions are anticipated, i.e. in cases where consumers have increased power consumption after a longer period of dead condition, e.g. in air conditioning systems, heating systems, motors, etc. Thus a general raise of pickup thresholds can be avoided taking into consideration such starting conditions.

2.6.1 Function Description

The dynamic cold load pickup feature operates with the time overcurrent protection functions as described in the above sections2.4.32.5. A set of alternative pickup values can be set for each stage. It is selected automatically-dynamically during operation.



Note

Dynamic cold load pickup is in addition to the four setting groups (A to D) which are configured separately.

There are two methods used by the device to determine if the protected equipment is de-energised:

- Via a binary inputs, an auxiliary contact in the circuit breaker can be used to determine if the circuit breaker is open or closed.
- The current flow monitoring threshold may be used to determine if the equipment is de-energised.

You may select one of these criteria for the time overcurrent protection for phase currents and for that for residual current. The device assigns automatically the correct side or measuring location for current detection or the breaker auxiliary contact in accordance with the assignment of the associated protection functions. The time overcurrent protection for earth current allows the breaker criterion only if it is assigned to a certain side of the protective object (Section 2.1.4, margin heading „The assignment of the 1-phase measuring inputs “); otherwise the current criterion can be used exclusively.

If the device recognises the protected equipment to be de-energised via one of the above criteria, then the alternative pickup values will become effective for the overcurrent stages once a specified time delay **`CB Open Time`** has lapsed. When the protected equipment is re-energised (i.e. the device receives input via a binary input that the assigned circuit breaker is closed or the assigned current flowing through the breaker increases above the current flow monitoring threshold), the active time **`Active Time`** is initiated. Once the active time has elapsed, the pickup values of the overcurrent stages return to their normal settings. The time may be reduced when current values after startup, i.e. after the circuit breaker is closed, fall below all normal pickup values for a set period of time **`Stop Time`**. The start condition for the fast reset time is made up of an OR-combination of the dropout conditions of all time overcurrent elements. When **`Stop Time`** is set to ∞ or binary input is active, no comparison is

made with the „normal“ setpoints. The function is inactive and the fast reset time, if applied, is reset.

If overcurrent elements are picked up while **Active Time** is running, the fault generally prevails until pickup drops out, using the dynamic pickup values. Only then are the parameters set back to „normal“.

If the dynamic cold load pickup function is blocked via the binary input all triggered timers will be immediately reset and all „normal“ settings will be restored. If blocking occurs during an on-going fault with dynamic cold load pickup functions enabled, the timers of all overcurrent stages will be stopped, and then restarted based on their „normal“ duration.

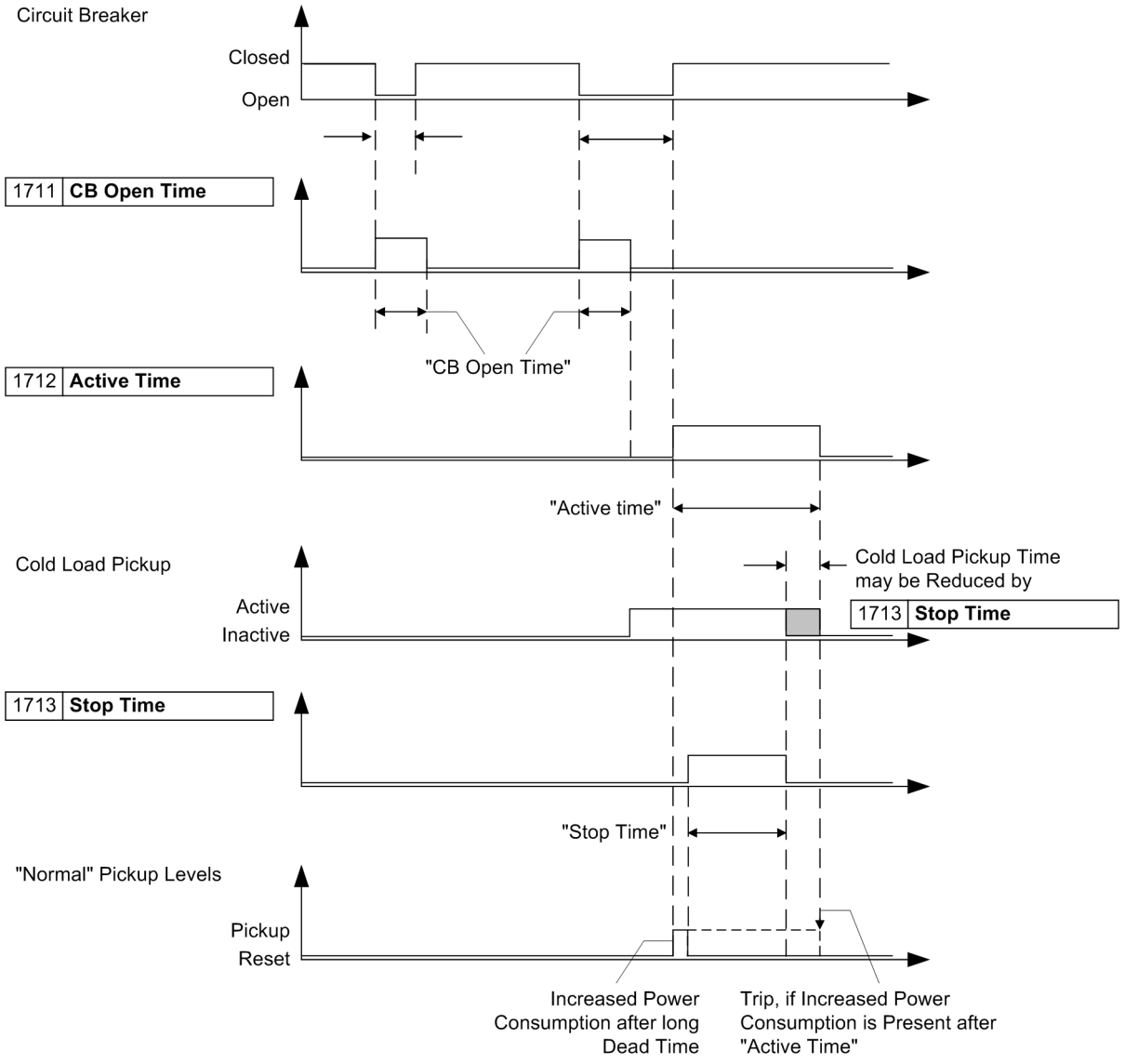

Figure 2-82 Cold Load Pickup Timing Sequence

During power up of the protective relay with an open circuit breaker, the time delay **CB Open Time** is started, and is processed using the „normal“ settings. Therefore, when the circuit breaker is closed, the „normal“ settings are effective.

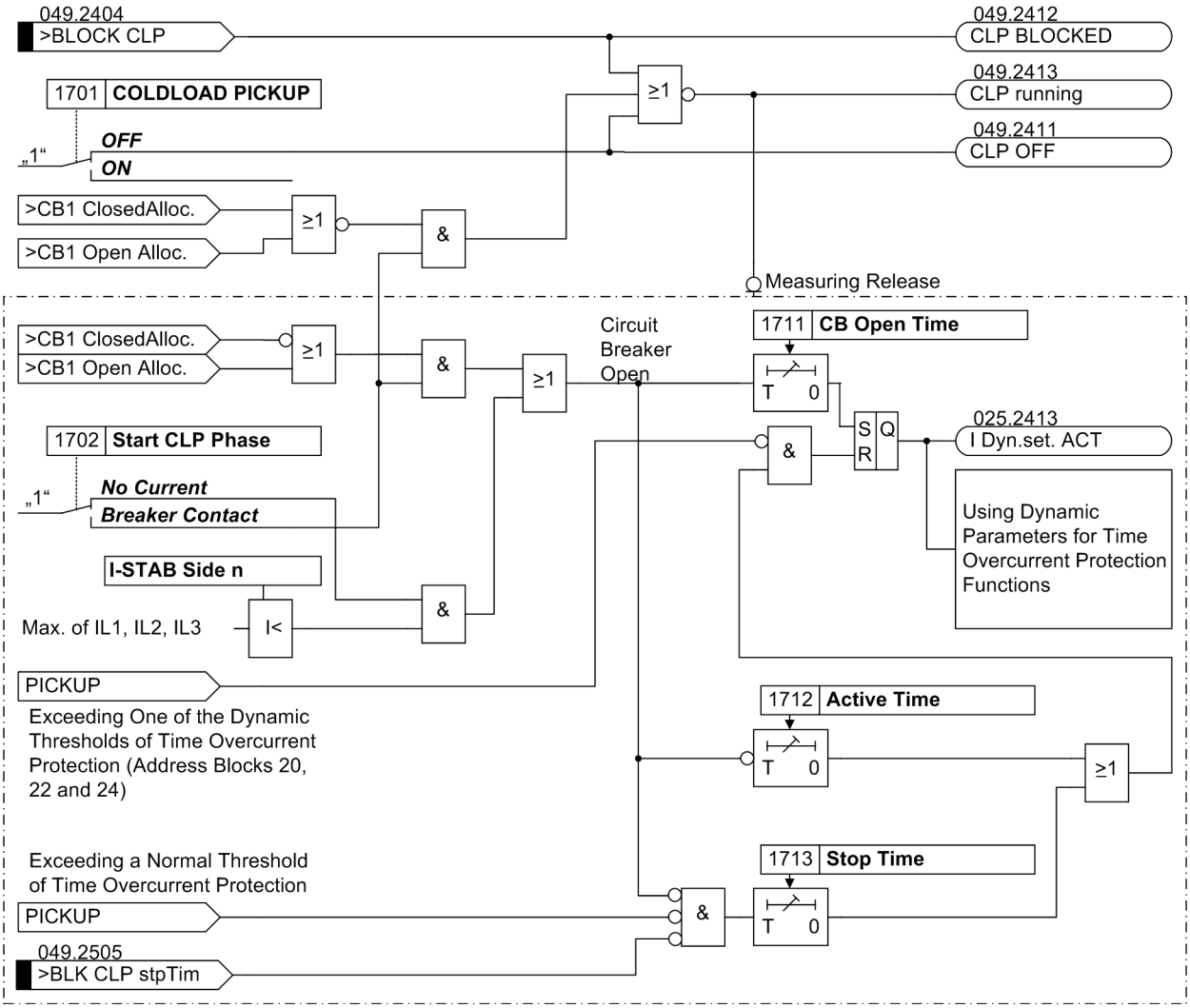

Figure 2-83 Logic diagram for dynamic cold load pickup feature — illustrated for phase overcurrent protection stage on side 1 (simplified)

2.6.2 Setting Notes

General

Dynamic cold load pickup can only be enabled if during configuration of the functional scope was set at the address 117 **COLDLOAD PICKUP**. = ***Enabled*** (see Subsection 2.1.3). If the function is not required ***Disabled*** is to be set. In address 1701 **COLDLOAD PICKUP** the function can be set to ***ON*** or ***OFF***.

Cold Load Criteria

You can determine the criteria for dynamic switchover to the cold load pickup values for all protective functions which allow this switchover. Select the **current criterion** or the breaker position criterion **breaker position**:

- address 1702 **Start CLP Phase**for the phase current stages,
- address 1703 **Start CLP 3IO** for the residual current stages,
- address 1704 **Start CLP Earth** for the earth current.

The current criterion takes the currents of such side or measuring location to which the corresponding protective function is assigned. When using the breaker position crite-

rion, the feedback information of the assigned breaker must inform the device about the breaker position.

The time overcurrent protection for earth current allows the breaker criterion only if an unequivocal relationship exists between its assigned side or measuring location and the feedback information of the breaker (**SwitchgCBaux S1**, **SwitchgCBaux S2** to **SwitchgCBaux M5**, addresses 831 to 840).

Timers

There are no specific procedures on how to set the delay times **CB Open Time**at addresses1711), **Active Time** (address 1712) and **Stop Time** (address 1713). These time delays must be based on the specific loading characteristics of the equipment being protected, and should be set to allow short-term overloads associated with dynamic cold load conditions.

Cold Load Pickup Values

The dynamic pickup values and time delays associated with the time overcurrent stages are set in the related addresses of the stages themselves.

2.6.3 Settings

Addr.	Parameter	Setting Options	Default Setting	Comments
1701	COLDLOAD PICKUP	OFF ON	OFF	Cold-Load-Pickup Function
1702	Start CLP Phase	No Current Breaker Contact	No Current	Start Condition CLP for O/C Phase
1703	Start CLP 3I0	No Current Breaker Contact	No Current	Start Condition CLP for O/C 3I0
1704	Start CLP Earth	No Current Breaker Contact	No Current	Start Condition CLP for O/C Earth
1705	Start CLP Ph 2	No Current Breaker Contact	No Current	Start Condition CLP for O/C Phase 2
1706	Start CLP Ph 3	No Current Breaker Contact	No Current	Start Condition CLP for O/C Phase 3
1707	Start CLP 3I0 2	No Current Breaker Contact	No Current	Start Condition CLP for O/C 3I0 2
1708	Start CLP 3I0 3	No Current Breaker Contact	No Current	Start Condition CLP for O/C 3I0 3
1709	Start CLP E 2	No Current Breaker Contact	No Current	Start Condition CLP for O/C Earth 2
1711	CB Open Time	0 .. 21600 sec	3600 sec	Circuit Breaker OPEN Time
1712	Active Time	1 .. 21600 sec	3600 sec	Active Time
1713	Stop Time	1 .. 600 sec; ∞	600 sec	Stop Time

2.6.4 Information List

No.	Information	Type of Information	Comments
025.2413	I Dyn.set. ACT	OUT	Dynamic settings O/C Phase are ACTIVE
026.2413	IE Dyn.set. ACT	OUT	Dynamic settings O/C Earth are ACTIVE
049.2404	>BLOCK CLP	SP	>BLOCK Cold-Load-Pickup
049.2411	CLP OFF	OUT	Cold-Load-Pickup switched OFF
049.2412	CLP BLOCKED	OUT	Cold-Load-Pickup is BLOCKED
049.2413	CLP running	OUT	Cold-Load-Pickup is RUNNING
049.2505	>BLK CLP stpTim	SP	>BLOCK Cold-Load-Pickup stop timer
192.2413	3I0 Dyn.set.ACT	OUT	Dynamic settings O/C 3I0 are ACTIVE
208.2413	I-2 Dyn.set.ACT	OUT	Dynamic settings O/C Phase-2 are ACTIVE
210.2413	I-3 Dyn.set.ACT	OUT	Dynamic settings O/C Phase-3 are ACTIVE
322.2413	3I0-2 Dyn.s.ACT	OUT	Dynamic settings O/C 3I0-2 are ACTIVE
324.2413	3I0-3 Dyn.s.ACT	OUT	Dynamic settings O/C 3I0-3 are ACTIVE
326.2413	IE-2 Dyn.s. ACT	OUT	Dynamic settings O/C Earth-2 are ACTIVE

2.7 Single-Phase Time Overcurrent Protection

The single-phase time overcurrent protection can be assigned to either of the single-phase measured additional current inputs of the device. This may be a „normal“ input or a high-sensitivity input. In the latter case, a very sensitive pickup threshold is possible (smallest setting 3 mA at the current input).

The single-phase time overcurrent protection comprises two definite time delayed stages which can be combined as desired. If only one stage is required, set the other to ∞.

Examples for application are high-impedance differential protection or high-sensitivity tank leakage protection. These applications are covered in the following subsections.

2.7.1 Function Description

The measured current is filtered by numerical algorithms. Due to high sensitivity, a particularly narrow band filter is used.

For the single-phase I>>-stage, the current measured at the assigned current input is compared with the setting value **1Phase I>>**. Current above the pickup value is detected and annunciated. When the delay time **T I>>** has expired, tripping command is issued. The reset value is approximately 95 % of the pickup value for currents above I_N. For lower values the dropout ratio is reduced in order to avoid intermittent pickup on currents near the setting value (e.g. 90 % at 0.2 · I_N).

When high fault current occurs, the current filter can be bypassed in order to achieve a very short tripping time. This is automatically done when the instantaneous value of the current exceeds the set value I>> stage by at least factor 2 · $\sqrt{2}$.

For the single-phase I>-stage, the current measured at the assigned current input is compared with the setting value **1Phase I>**. Current above the pickup value is detected and annunciated. When the delay time **T I>** has expired, the tripping command is issued. The reset value is approximately 95 % of the pickup value for currents above I_N. Lower values require a higher hysteresis in order to avoid intermittent pickup on currents near the pickup value (e.g. 80 % at 0.1 · I_N).

Both stages form a two-stage definite time overcurrent protection (figure 2-84).

Figure 2-85 illustrates the logic diagram for the single-phase overcurrent stage

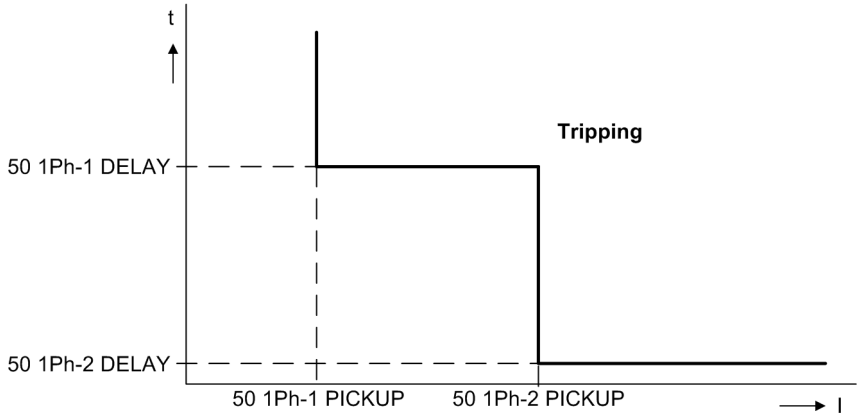

Figure 2-84 Two-stage tripping characteristic of the single-phase time overcurrent protection

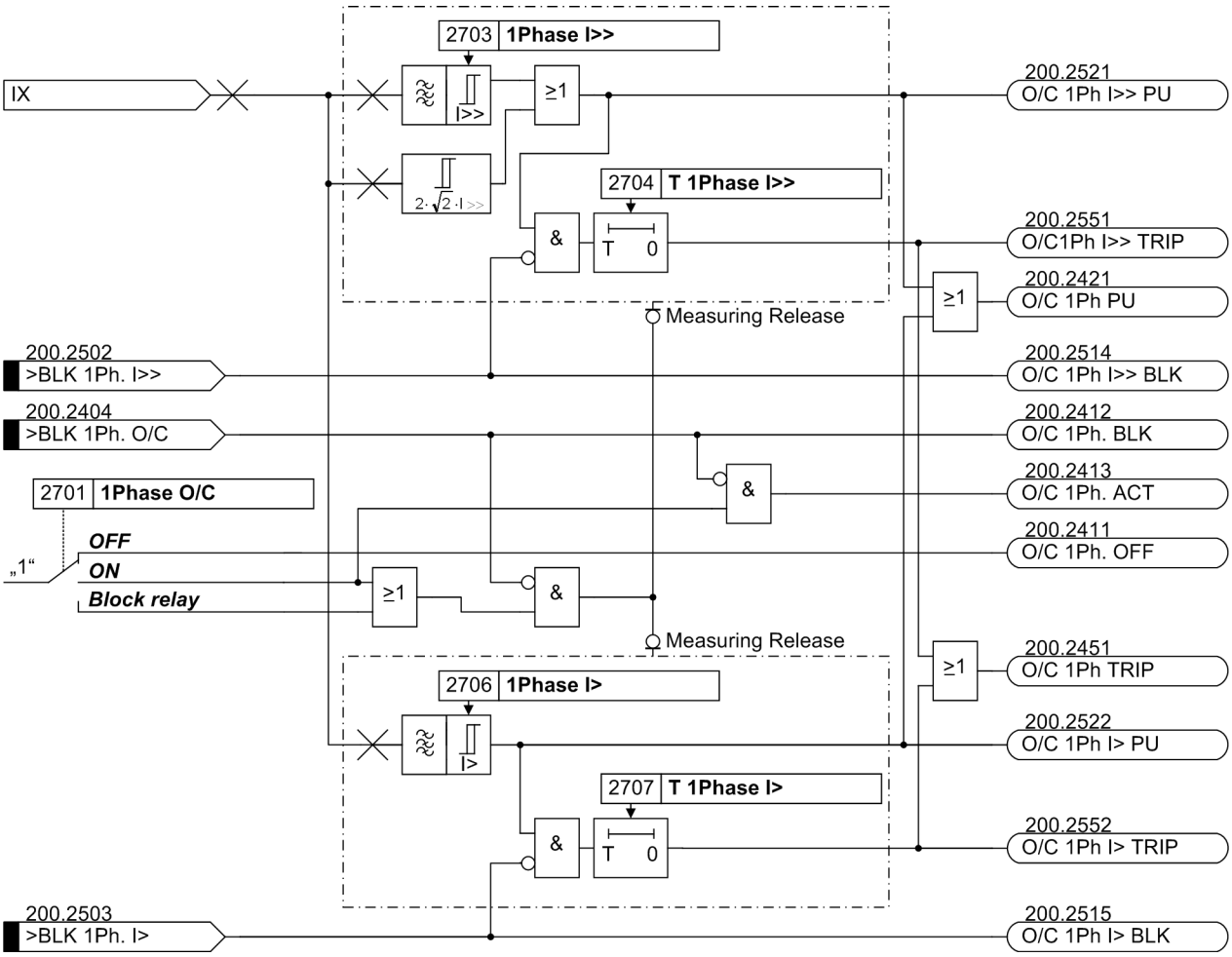

Figure 2-85 Logic diagram of the single-phase overcurrent protection — example for detection of the current at input II_8

2.7.2 High-impedance Differential Protection

Application Example

With the high-impedance scheme all current transformers at the limits of the protection zone operate parallel to a common relatively high-ohmic resistance R whose voltage is measured. With 7UT613/63x the voltage is registered by measuring the current through the external resistor R at the high-sensitivity single-phase current measuring input.

The current transformers have to be of equal design and provide at least a separate core for high-impedance differential protection. They also must have the same transformation ratio and approximately the same knee-point voltage.

With 7UT613/63x, the high-impedance principle is very well suited for detection of earth faults in transformers, generators, motors and shunt reactors in earthed systems. High-impedance differential protection can be used instead of or in addition to the restricted earth fault protection (refer also to Section 2.3).

Figure 2-86 (left side) illustrates an application example for an earthed transformer winding or an earthed motor/generator. The example on the right side shows a non-earthed transformer winding or an non-earthed motor/generator where the earthing of the system is assumed to be somewhere else.

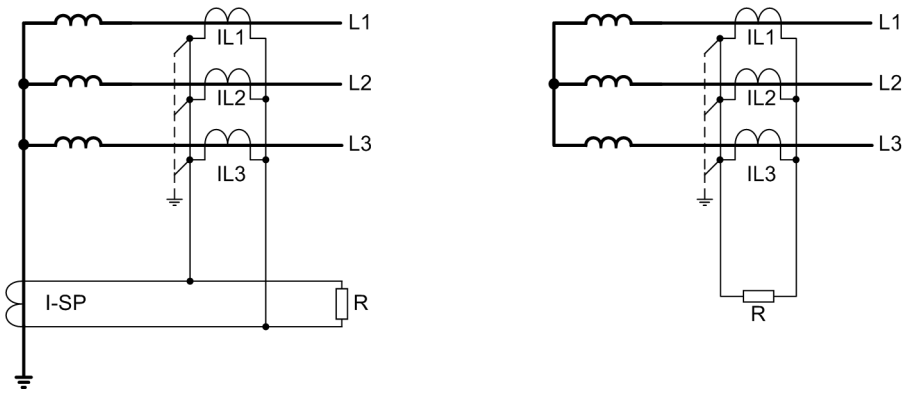

Figure 2-86 Earth fault protection according to the high-impedance principle

High-impedance Principle

|The high-impedance principle is explained on the basis of an earthed transformer winding.

No zero sequence will flow during normal operation, i.e. the starpoint is $I_{St} = 0$ and the line currents $3\,\underline{I}_0 = \underline{I}_{L1} + \underline{I}_{L2} + \underline{I}_{L3} = 0$.

With an external earth fault (left in figure 2-87), which fault current is supplied via the earthed starpoint, the same current is flowing through the transformer starpoint and the phases. The corresponding secondary currents (all current transformers having the same transformation ratio) compensate each other, they are connected in series. Across resistance R only a small voltage is generated. It originates from the inner resistance of the transformers and the connecting cables of the transformers. Even if any current transformer experiences a partial saturation, it will become low-ohmic for the period of saturation and creates a low-ohmic shunt to the high-ohmic resistor R. Thus, the high resistance of the resistor also has a stabilising effect (the so-called resistance stabilisation).

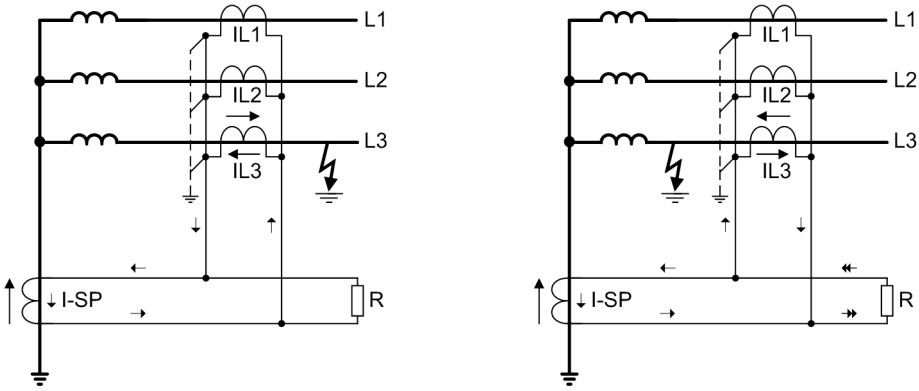

Figure 2-87 Earth fault protection using the high-impedance principle

In case of an earth fault in the protection zone (figure2-87 right) a starpoint current I_{St} will certainly be present. The earthing conditions in the rest of the network determine how strong a zero sequence current from the system is. A secondary current which is equal to the total fault current tries to pass through the resistor R. Since the latter is high-ohmic, a high voltage emerges immediately. Therefore, the current transformers get saturated. The RMS voltage across the resistor approximately corresponds to the knee-point voltage of the current transformers.

Resistance R is dimensioned such that, even with the very lowest earth fault current to be detected, it generates a secondary voltage, which is equal to half the saturation voltage of current transformers (see also notes on "Dimensioning" in subsection 2.7.4).

High-Impedance Protection with 7UT613/63x

With 7UT613/63x a high-sensitivity single-phase measuring input is used for high-impedance protection. As this is a current input, the protection detects current through the resistor instead of the voltage across resistor R.

Figure 2-88 shows the connection example. The 7UT613/63x is connected in series to resistor R and measures its current.

Varistor V limits the voltage when internal faults occur. High voltage peaks emerging with transformer saturation are cut by the varistor. At the same time, voltage is smoothed without reduction of the mean value.

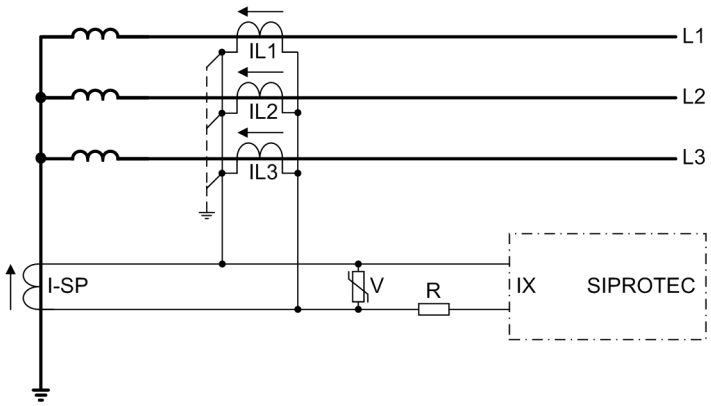

Figure 2-88 Connection scheme for restricted earth fault protection according to the high-impedance principle

For protection against overvoltages it is also important that the device is directly connected to the earthed side of the current transformers so that the high voltage at the resistor can be kept away from the device.

For generators, motors and shunt reactors high-impedance differential protection can be used analogously. All current transformers at the overvoltage side, the undervoltage side and the current transformer at the starpoint have to be connected in parallel when using auto-transformers.

In principle, this scheme can be applied to every protected object. When applied as busbar protection, for example, the device is connected to the parallel connection of all feeder current transformers via the resistor.

2.7.3 Tank Leakage Protection

Application Example

The tank leakage protection has the task to detect earth leakage — even high-ohmic — between a phase and the frame of a power transformer. The tank must be isolated from earth. A conductor links the tank to earth, and the current through this conductor is fed to a current input of the relay. When a tank leakage occurs, a fault current (tank leakage current) will flow through the earthing conductor to earth. This tank leakage current is detected by the single-phase overcurrent protection as an overcurrent; an instantaneous or delayed trip command is issued in order to disconnect all sides of the transformer.

A high-sensitivity single-phase current input is used for tank leakage protection.

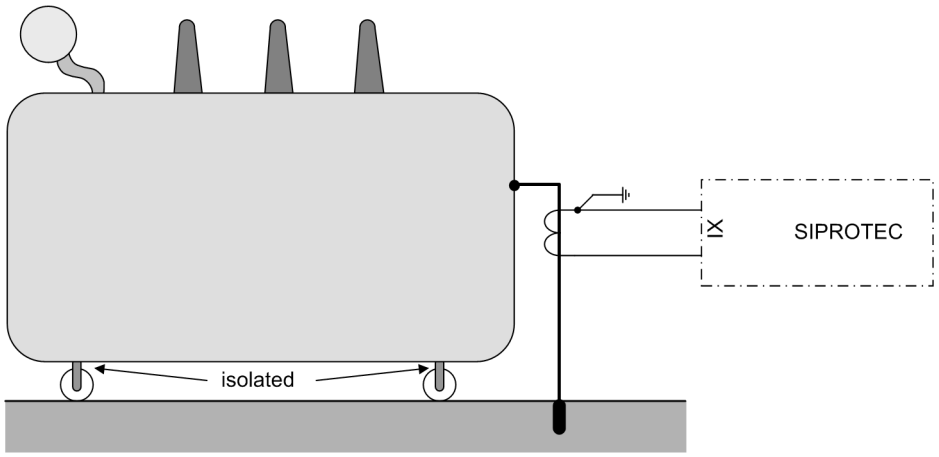

Figure 2-89 Principle of tank leakage protection

2.7.4 Setting Notes

General

the single-phase time overcurrent protection can switched at address 2701 **1Phase O/C** ***ON*** or ***OFF***. The option ***Block relay*** allows to operate the protection but the trip output relay is blocked.

The settings depend on the application. The setting ranges depend on whether a "normal" or a "high-sensitivity" current input is used. This was determined during assignment of the protection function (section 2.1.4 under „Assignment of Protection Functions to the Measuring Locations / Sides“, margin heading „Additional 1-phase

Protection Functions“) and the properties of the 1-phase measuring inputs (section 2.1.4 under „Topology of the Protected Object“, margin heading „High-sensitive 1-phase Additional Measuring Inputs“).

- If you have declared the type of the corresponding 1-phase current input as (address 255 and/or 256) as ***1A*** / ***5A*** ***input***, set the pickup value **1Phase I>>** under address 2702, the pickup value **1Phase I>** under address 2705. If only one stage is required, set the other to ∞.
- If you have declared the type of the corresponding 1-phase current input as (address 255 and/or 256) as ***sensitiv input***, set the pickup value **1Phase I>>** under address 2703, the pickup value **1Phase I>** under address 2706. If only one stage is required, set the other to ∞.

If you require a trip time delay, set it for the I>> stage at address 2704 **T 1Phase I>>**, and for the I> stage at address 2707 **T 1Phase I>**. If no delay time required, set time to 0 s.

The set times are pure delay times which do not include the inherent operating times of the protection stages. If you set a time to ∞, the respective stage does not trip but a pickup annunciation will be signalled.

A detailed description for the use as high-impedance protection and tank leakage protection is set out below.

Use as High-Impedance Differential Protection

When used as high-impedance protection, only the pickup value of the single-phase overcurrent protection is set on the 7UT613/63x to detect overcurrent at the assigned highly sensitive 1-phase current input.

However, the entire function of the high-impedance unit protection is dependent on the coordination of the current transformer characteristics, the external resistor R and the voltage across R. The following three header margins entail information with regard to these considerations.

Current Transformer Data for High-Impedance Protection

All current transformers must have identical transformation ratio and nearly equal knee-point voltage. This is usually the case if they are of equal design and have identical rated data. If the saturation voltage is not stated, it can be approximately calculated from the rated data of a CT as follows:

$$U_S = \left(R_i + \frac{P_N}{I_N^2} \right) \cdot ALF \cdot I_N$$

U_S Saturation voltage

R_i Internal burden of the CT

P_N Rated power of the CT

I_{Nom} Secondary rated current of the current transformer

ALF Nominal accuracy limit factor of the current transformer

Rated current, rated power and accuracy limit factor are usually indicated on the rating plate of the current transformer, e.g.

Current transformer 800/5; 5P10; 30 VA

That means

I_{Nom} = 5 A (from 800/**5**)

n = 10 (from 5P**10**)

P_N = **30** VA

The internal burden is often stated in the test report of the current transformer. If not known, it can be derived from a DC measurement on the secondary winding.

Calculation Example:

Current transformer 800/5; 5P10; 30 VA with $R_i = 0.3\ \Omega$

$$U_S = \left(R_i - \frac{P_N}{I_N^2}\right) \cdot ALF \cdot I_N - \left(0.3\ \Omega + \frac{30\ VA}{(5\ A)^2}\right) \cdot 10 \cdot 5\ A = 75\ V$$

or

Current transformer 800/1; 5P10; 30 VA with $R_i = 5\ \Omega$

$$U_S = \left(R_i - \frac{P_N}{I_N^2}\right) \cdot ALF \cdot I_N = \left(5\ \Omega + \frac{30\ VA}{(1\ A)^2}\right) \cdot 10 \cdot 1\ A = 350\ V$$

Apart from the CT data, the resistance of the longest connection lead between the CTs and the 7UT613/63x device must be known.

Restraint Considerations for High-Impedance Protection

The stability condition is based on the following simplified assumption: If there is an external fault, **one** of the current transformers gets totally saturated. The other ones will continue transmitting their (partial) currents. In theory, this is the most unfavourable case. Since, in practice, it is also the saturated transformer which supplies current, a safety margin is automatically guaranteed.

Figure 2-90 illustrates a simplified equivalent circuit. CT1 and CT2 are assumed as ideal transformers with their inner resistance R_{i1} and R_{i2}. R_a is the resistance of the connecting cables between current transformers and resistor R. They are multiplied by 2 as they have a go and a return line. R_{a2} is the resistance of the longest connecting cable.

CT1 transmits current I_1. CT2 is saturated; this is shown by the dashed short-circuit line. Due to saturation the transformer represents a low-resistance shunt.

A further requirement is $R >> (2R_{a2} + R_{i2})$.

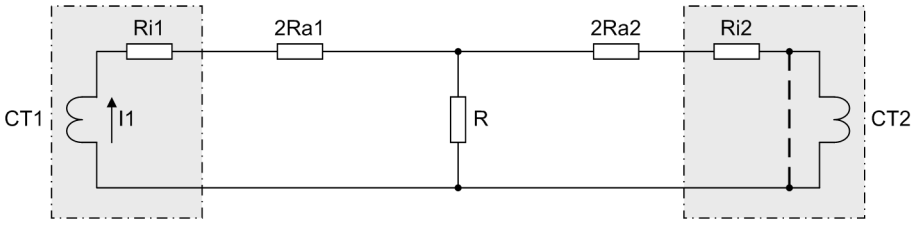

Figure 2-90 Simplified equivalent circuit of a circulating current system for high-impedance protection

The voltage across R is then

$U_R = I_1 \cdot (2R_{a2} + R_{i2})$

Furthermore, it is assumed that the pickup value of the 7UT613/63x corresponds to half the knee-point voltage of the current transformers. The extreme case is thus

$U_R = U_S / 2$

This results in a stability limit I_{SL}, i.e. the maximum through-fault current below which the scheme remains stable:

$$I_{SL} = \frac{U_{KPV}/2}{2 \cdot R_{a2} + R_{i2}}$$

Calculation example:

For the 5 A CT as above with U_S = 75 V and R_i = 0,3 Ω

longest CT connection lead 22 m with 4 mm² cross-section; results in $R_a \approx 0{,}1\ \Omega$

$$I_{SL} = \frac{U_{KPV}/2}{2 \cdot R_{a2} + R_{i2}} = \frac{37.5\ \text{V}}{2 \cdot 0.1\ \Omega + 0.3\ \Omega} = 75\ \text{A}$$

that is 15 × rated current or 12 kA primary.

For the 1-A CT as above with U_S = 350 V and R_i = 5 Ω

longest CT connection lead 107 m with 2,5 mm² cross-section; results in $R_a \approx 0{,}75\ \Omega$

$$I_{SL} = \frac{U_{KPV}/2}{2 \cdot R_{a2} + R_{i2}} = \frac{175\ \text{V}}{2 \cdot 0.75\ \Omega + 5\ \Omega} = 27\ \text{A}$$

that is 27 × rated current or 21.6 kA primary.

Sensitivity Considerations for High-Impedance Protection

As before-mentioned, high-impedance protection is to pick up with approximately half the knee-point voltage of the current transformers. Resistance R can be calculated from it.

Since the device measures the current flowing through the resistor, resistor and measuring input of the device are to be connected in series. Since, furthermore, the resistance shall be high-ohmic (condition: $R >> 2R_{a2} + R_{i2}$, as above mentioned), the inherent resistance of the measuring input can be neglected. The resistance is then calculated from the pickup current I_{an} and half the knee-point voltage:

$$R = \frac{U_{KPV}/2}{I_{pu}}$$

Calculation Example:

For the 5-A CT as above

desired pickup value I_{an} = 0.1 A (corresponding to 16 A primary)

$$R = \frac{U_{KPV}/2}{I_{pu}} = \frac{75\ \text{V}/2}{0.1\ \text{A}} = 375\ \Omega$$

For the 1-A CT as above

desired pickup valueI_{an} = 0.05 A (corresponding to 40 A primary)

$$R = \frac{U_{KPV}/2}{I_{pu}} = \frac{350\ \text{V}/2}{0.05\ \text{A}} = 3500\ \Omega$$

The required short-term power of the resistor is derived from the knee-point voltage and the resistance:

$$P_R = \frac{U_{KPV}^2}{R} = \frac{(75\ V)^2}{375\ \Omega} = 15\ W \qquad \text{for the 5 A CT example}$$

$$P_R = \frac{U_{KPV}^2}{R} = \frac{(350\ V)^2}{3500\ \Omega} = 35\ W \qquad \text{for the 1 A CT example}$$

As this power only appears during earth faults for a short period of time, the rated power can be smaller by approx. factor 5.

The varistor (see figure below) must be dimensioned in such manner that it remains high-ohmic up to the knee-point voltage, e.g.

approx. 100 V for 5-A CT,

approx. 500 V for 1-A CT.

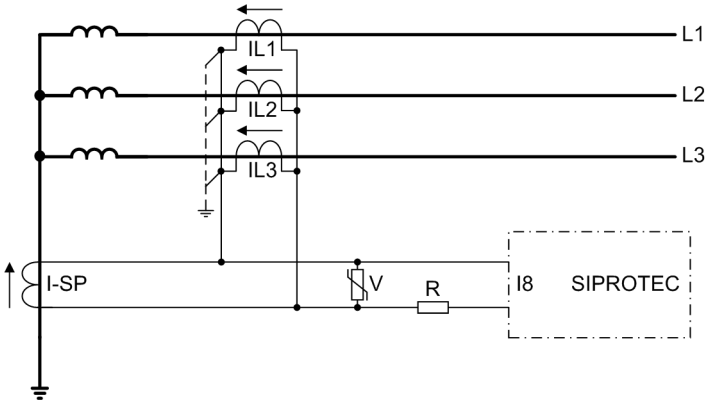

Figure 2-91 Connection scheme for restricted earth fault protection according to the high-impedance principle

The pickup value (0.1 A or 0.05 A in the example) is set in address 2706 **1Phase I>**. The I>> stage is not required (address 2703 **1Phase I>>** = ∞).

The trip command can be delayed under address 2707 **T 1Phase I>**. This time delay is usually set to 0.

If a higher number of current transformers is connected in parallel, e.g. when using as busbar protection with several feeders, the magnetising currents of the transformers connected in parallel cannot be neglected anymore. In this case, the sum total of the magnetising currents at half knee-point voltage (corresponding to the setting value) has to be established. These magnetising currents reduce the current through the resistor R. The actual pickup value thus increases accordingly.

Use as Tank Leakage Protection

If the single-phase time overcurrent protection is used as tank leakage protection, only the pickup value for the respective 1-phase current input is set on 7UT613/63x.

The tank leakage protection is a highly sensitive overcurrent protection which detects the leakage current between the isolated transformer tank and earth. Its sensitivity is set in address 2706 **1Phase I>**. Stage I>> is not used (address 2703 **1Phase I>>** = ∞).

The trip command can be delayed in address 2707 **T 1Phase I>**. Normally, this delay time is set to ***0***.

Note

In the following parameter overview the addresses 2703 and 2706 apply to a high-sensitive current measuring input and are independent from the rated current.

2.7.5 Settings

The table indicates region-specific presettings. Column C (configuration) indicates the corresponding secondary nominal current of the current transformer.

Addr.	Parameter	C	Setting Options	Default Setting	Comments
2701	1Phase O/C		OFF ON Block relay	OFF	1Phase Time Overcurrent
2702	1Phase I>>	1A	0.05 .. 35.00 A; ∞	0.50 A	1Phase O/C I>> Pickup
		5A	0.25 .. 175.00 A; ∞	2.50 A	
2703	1Phase I>>		0.003 .. 1.500 A; ∞	0.300 A	1Phase O/C I>> Pickup
2704	T 1Phase I>>		0.00 .. 60.00 sec; ∞	0.10 sec	T 1Phase O/C I>> Time Delay
2705	1Phase I>	1A	0.05 .. 35.00 A; ∞	0.20 A	1Phase O/C I> Pickup
		5A	0.25 .. 175.00 A; ∞	1.00 A	
2706	1Phase I>		0.003 .. 1.500 A; ∞	0.100 A	1Phase O/C I> Pickup
2707	T 1Phase I>		0.00 .. 60.00 sec; ∞	0.50 sec	T 1Phase O/C I> Time Delay

2.7.6 Information List

No.	Information	Type of Information	Comments
200.2404	>BLK 1Ph. O/C	SP	>BLOCK Time Overcurrent 1Phase
200.2411	O/C 1Ph. OFF	OUT	Time Overcurrent 1Phase is OFF
200.2412	O/C 1Ph. BLK	OUT	Time Overcurrent 1Phase is BLOCKED
200.2413	O/C 1Ph. ACT	OUT	Time Overcurrent 1Phase is ACTIVE
200.2421	O/C 1Ph PU	OUT	Time Overcurrent 1Phase picked up
200.2451	O/C 1Ph TRIP	OUT	Time Overcurrent 1Phase TRIP
200.2492	O/C 1Ph Err CT	OUT	O/C 1Phase err.:No auxiliary CT assigned
200.2502	>BLK 1Ph. I>>	SP	>BLOCK Time Overcurrent 1Ph. I>>
200.2503	>BLK 1Ph. I>	SP	>BLOCK Time Overcurrent 1Ph. I>
200.2514	O/C 1Ph I>> BLK	OUT	Time Overcurrent 1Phase I>> BLOCKED
200.2515	O/C 1Ph I> BLK	OUT	Time Overcurrent 1Phase I> BLOCKED
200.2521	O/C 1Ph I>> PU	OUT	Time Overcurrent 1Phase I>> picked up
200.2522	O/C 1Ph I> PU	OUT	Time Overcurrent 1Phase I> picked up
200.2551	O/C1Ph I>> TRIP	OUT	Time Overcurrent 1Phase I>> TRIP
200.2552	O/C 1Ph I> TRIP	OUT	Time Overcurrent 1Phase I> TRIP
200.2561	O/C 1Ph I:	VI	Time Overcurrent 1Phase: I at pick up

2.8 Unbalanced Load Protection

Unbalanced load protection (negative sequence protection) detects unbalanced loads on the system. In addition, this protection function may be used to detect interruptions, faults, and polarity problems with current transformers. Furthermore, it is useful in detecting phase-to-earth, phase-to-phase, and double phase-to-earth faults with magnitudes lower than the maximum load current.

The tripping circuit monitoring is only sensible in three-phase protected objects. Whereas **PROT. OBJECT** = ***1ph Busbar*** or ***1 phase transf.*** (see Functional Scope, address 105, section 2.1.3.1) the following settings are not available.

In case of generators and motors, unbalanced loads create counter-rotating fields which act on the rotor at double frequency. Eddy currents are induced at the rotor surface leading to local overheating in rotor end zones and slot wedges.

In case of motors with fuses connected in series, a motor operating in single-phase condition due to operation of a fuse, only generates small and pulsing torque so that it is soon thermally strained assuming that the torque required by the machine remains unchanged. In addition, with unbalanced supply voltage it is endangered by thermal overload. Due to the small negative sequence reaction even small voltage asymmetries lead to negative sequence currents.

The negative sequence protection always refers to the three phase currents of the configured side or measuring location (see „Assigning the Functional Scope“, in Subsection 2.1.4).

The unbalanced load protection consists of two definite time stages and one inverse time stage, The latter may operate according to an IEC or an ANSI characteristic. A stage with a power-proportional characteristic (negative sequence current) is possible instead of the inverse time stage.

2.8.1 Function Description

Determination of Unbalanced Load

The unbalanced load protection of 7UT613/63x filters fundamental components from applied the phase currents and dissects them into their symmetrical components. Of this the negative sequence current of the system I_2 is evaluated. If the largest of the three phase currents lies above the minimum current **I-REST** of the one assigned side or measuring location and all phase currents are smaller than 4 times the rated current of the assigned side or measuring location, then the comparison of negative sequence current and setting value can take place.

Definite Time Stages

The definite time characteristic is of two-stage design. When the negative sequence current exceeds the set threshold **I2>** the timer **T I2>** is started and a corresponding pickup message is output. When the negative sequence current exceeds the set threshold **I2>>** of the high-set stage the timer **T I2>>** is started and a corresponding pickup message is output.

When a delay time is expired trip command is issued.

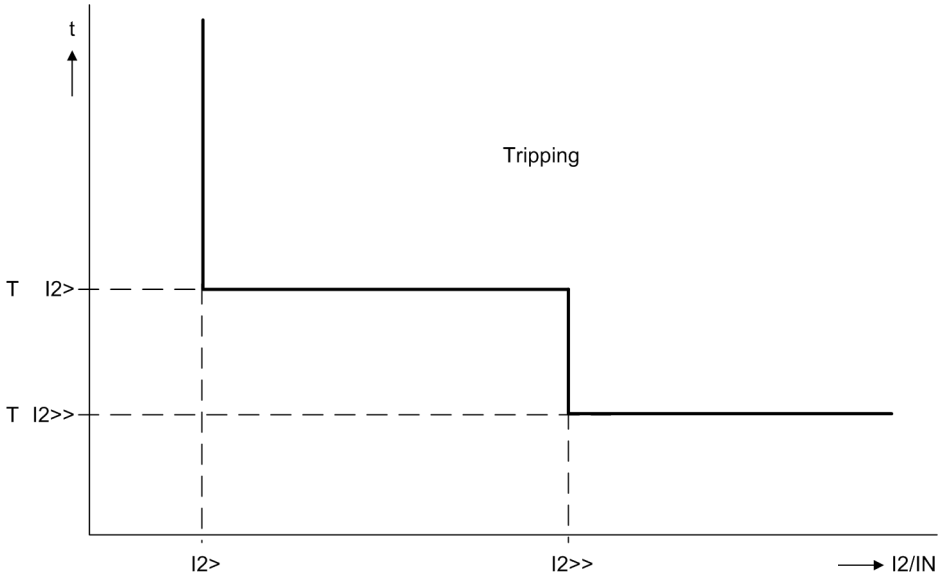

Figure 2-92 Tripping characteristic of the definite time unbalanced load protection

Inverse Time Stage

The inverse time overcurrent stage operates with a tripping characteristic either according to the IEC or the ANSI standard. The characteristics and their equations are given in the „Technical Data“. The definite time elements I2>> and I2> are superimposed on the inverse time curve.

Pickup, Trip

The negative sequence current I_2 is compared to the set value **I2p** . When the negative sequence current exceeds 1.1 times the setting value, a pickup annunciation is generated. The tripping time is calculated from the negative sequence current according to the characteristic selected. After expiration of the time period a tripping command is output. Figure 2-93 shows the qualitative course of the characteristic; the overlapping I2>> stage is represented by a dashed line.

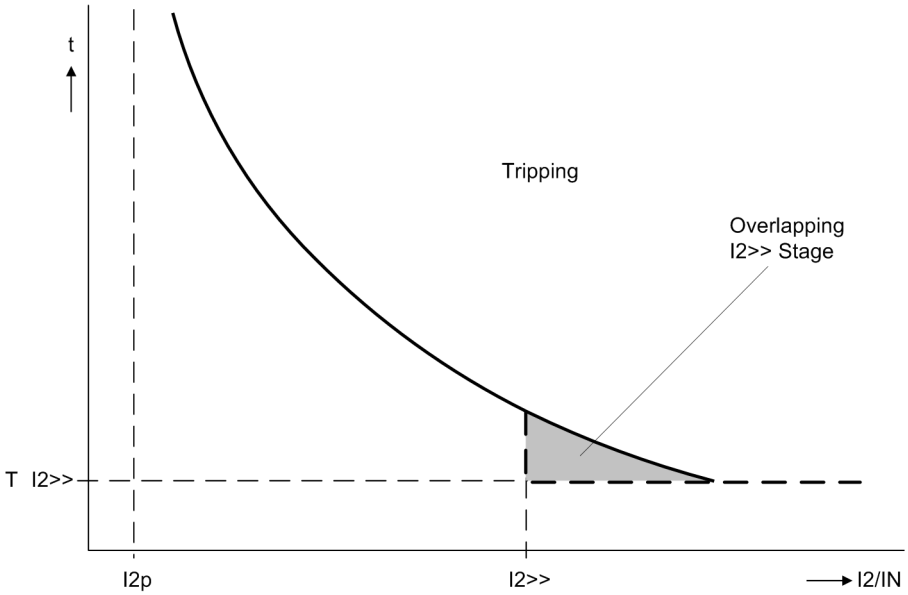

Figure 2-93 Inverse time characteristic for unbalanced load protection

Dropout

It can be determined whether the dropout of the stage is to follow right after the threshold undershot or whether it is evoked by disk emulation. "Right after" means that the pickup drops out when approx. 95 % of the set pickup value is undershot. For a new pickup the time counter starts at zero.

The disk emulation evokes a dropout process (time counter is decrementing) which begins after de-energisation. This process corresponds to the back turn of a Ferraris-disk (explaining its denomination „Disk Emulation“). In case several faults occur successively, it is ensured that due to the inertia of the Ferraris disk the „history“ is taken into consideration and the time behaviour is adapted. This ensures a proper simulation of the temperature rise of the protected object even for extremely fluctuating unbalanced load values. Reset begins as soon as 90 % of the setting value is undershot, in accordance with the dropout curve of the selected characteristic. In the range between the dropout value (95 % of the pickup value) and 90 % of the setting value, the incrementing and the decrementing process is in idle state. If 5 % of the setting value is undershot, the dropout process is completed, i.e. when a new pickup occurs, the timer starts again at zero.

Logic

Figure 2-94 shows the logic diagram for the breaker failure protection with the thermal stage (the IEC characteristic in the example) and the two definite time stages. The protection may be blocked via a binary input. That way, pickups and time stages are reset.

When the tripping criterion leaves the operating range of the unbalanced load protection (all phase currents below the minimum current **I-REST** of the concerned measuring location or side or at least one phase current is greater than $4 \cdot I_N$), the pickups of all unbalanced load stages drop off.

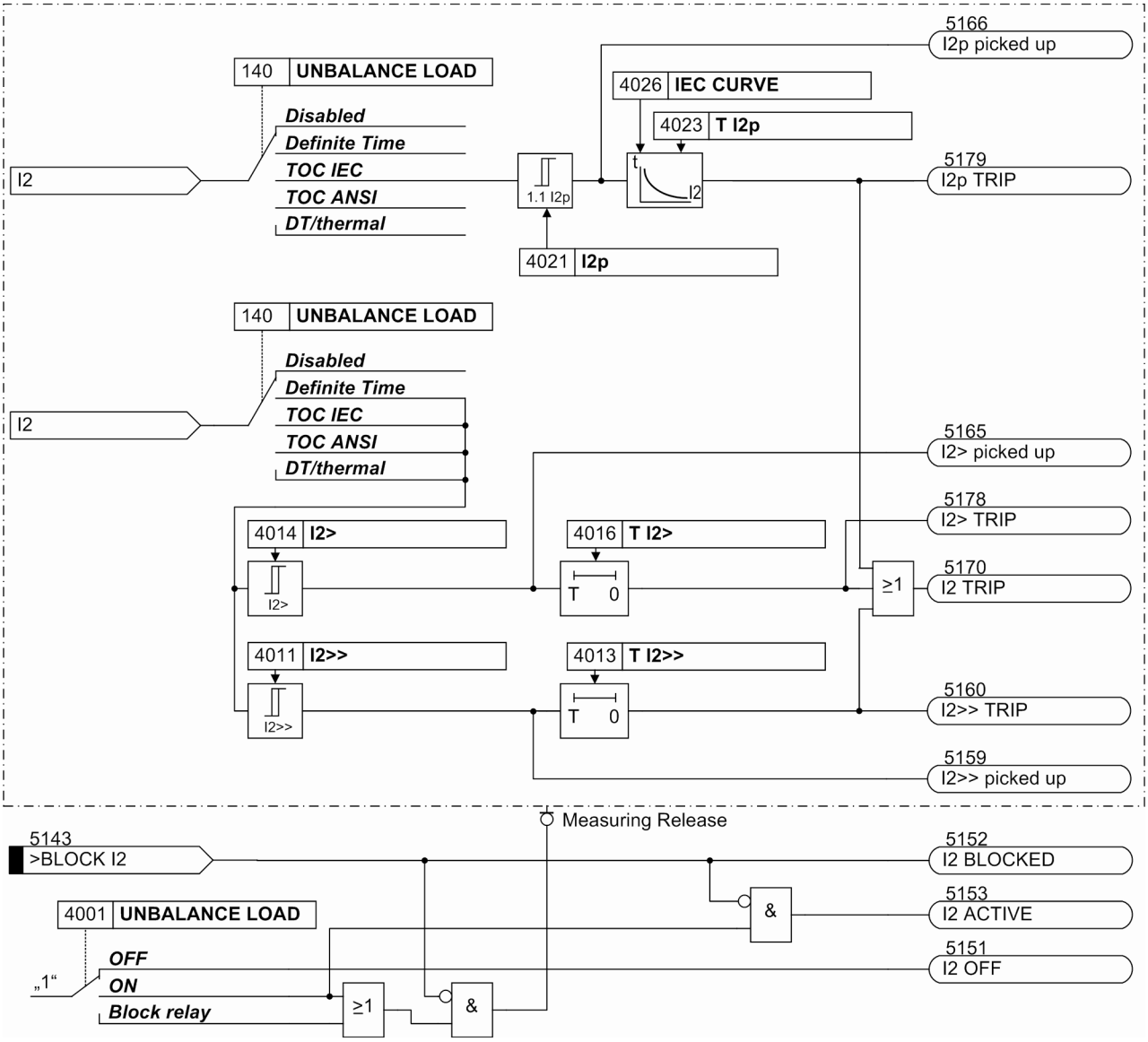

Figure 2-94 Logic diagram of the unbalanced load protection - illustrated for IEC characteristic

Thermal Stage

With the aid of the thermal stages the unbalanced load protection can be well adapted to the thermal loading of the electrical motor rotor during asymmetric load.

Pickup, Warning

The permissible continuous load imbalance is determined with the setting „I2 Permissible“. If this value is exceeded, it applies as "Pickup" for the negative sequence protection. At the same time this sets the alarm stage: After a set time „T WARN“ has expired, a warning message „I2> alarm“is given.

Thermal Characteristic

The thermal characteristic allows an approximate calculation of the thermal loading of the electrical motor rotor by load imbalance in the stator. This follows the simplified equation:

$$t = \frac{K}{\left(\frac{I_2}{I_{Nobj}}\right)^2}$$

with:

t Tripping time

O Asymmetry factor

I2 Negative sequence current

$I_{N\,Obj}$ Rated current of the protective object

The asymmetry factor K designates how long a negative sequence current may flow at nominal machine current. It is therefore the distinctive number of the object to be protected.

If the constantly permissible unbalanced load „I2 ADM“ is exceeded, the summation of the warming negative sequence system power commences. In this context, the current-time-area is calculated constantly to ensure a correct consideration of changing load cases. As soon as the current-time-area $(I_2/I_{NObj})^2 \cdot t$) has exceeded the K asymmetry factor, the thermal characteristic is tripped.

The model of the heating of the object to be protected is limited to 200 % of the thermal tripping limit.

Cool Down, Drop-Out

The „pickup“ of the unbalanced load protection falls back, when the allowable unbalanced load „I2 adm“ is undershot. The thermal image maintains its state and an adjustable cool down time „T COOL DOWN“ is started. In this context, this cool down time is defined as the time required by the thermal replica to cool down from 100 % to 0 %. In synchronous machines this depends on the construction, especially the damper winding. If there is again an asymmetrical loading during the cool-down phase, the previous history is considered. The tripping time would then decrease considerably.

Resulting Characteristic

As the thermal replica only works after exceeding the permissible continuous negative sequence current „I2 adm“, this value is the lower limit for resulting tripping characteristic Fig. 2-95). The area of the thermal replica connects to it with increasing negative sequence current. High negative sequence currents can only be caused by a phase-to-phase short circuit, which must be covered in accordance with the grading coordination chart. The thermal characteristics are therefore cut off by the definite time I_2>>-stage (see above under „Definite time stage (DT)“). The trigger time of the thermal replica does not fall below the trigger time of the I_2>>-stage

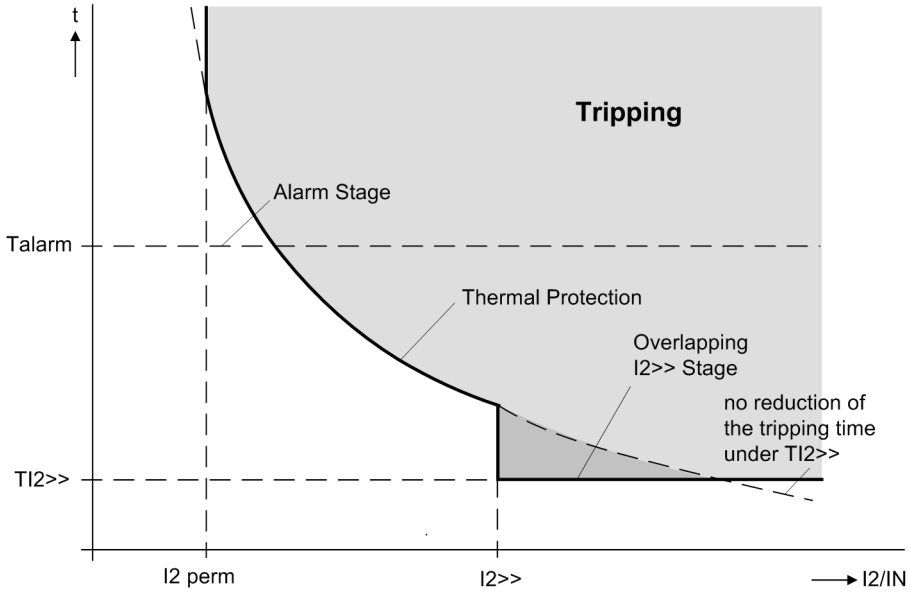

Figure 2-95 Resulting characteristic of the thermal asymmetrical load protection

Logic

Figure 2-96 shows the logic diagram for the breaker failure protection with the thermal stage and the definite time I_2>> stage. The I_2> stage is not represented. It is available in this operating mode, but is generally not required because an own warning level is available. The protection may be blocked via a binary input. That way, pickups and time stages are reset. The content of the thermal replica can be emptied via the binary input „>SLS RES th.repl“ and „>ULP Block“.

When leaving the work area of the negative sequence protection (all phase currents under the minimum current setting „I REST“ for the concerned measuring location or side or at least one phase current is greater than $4 \cdot I_N$) .

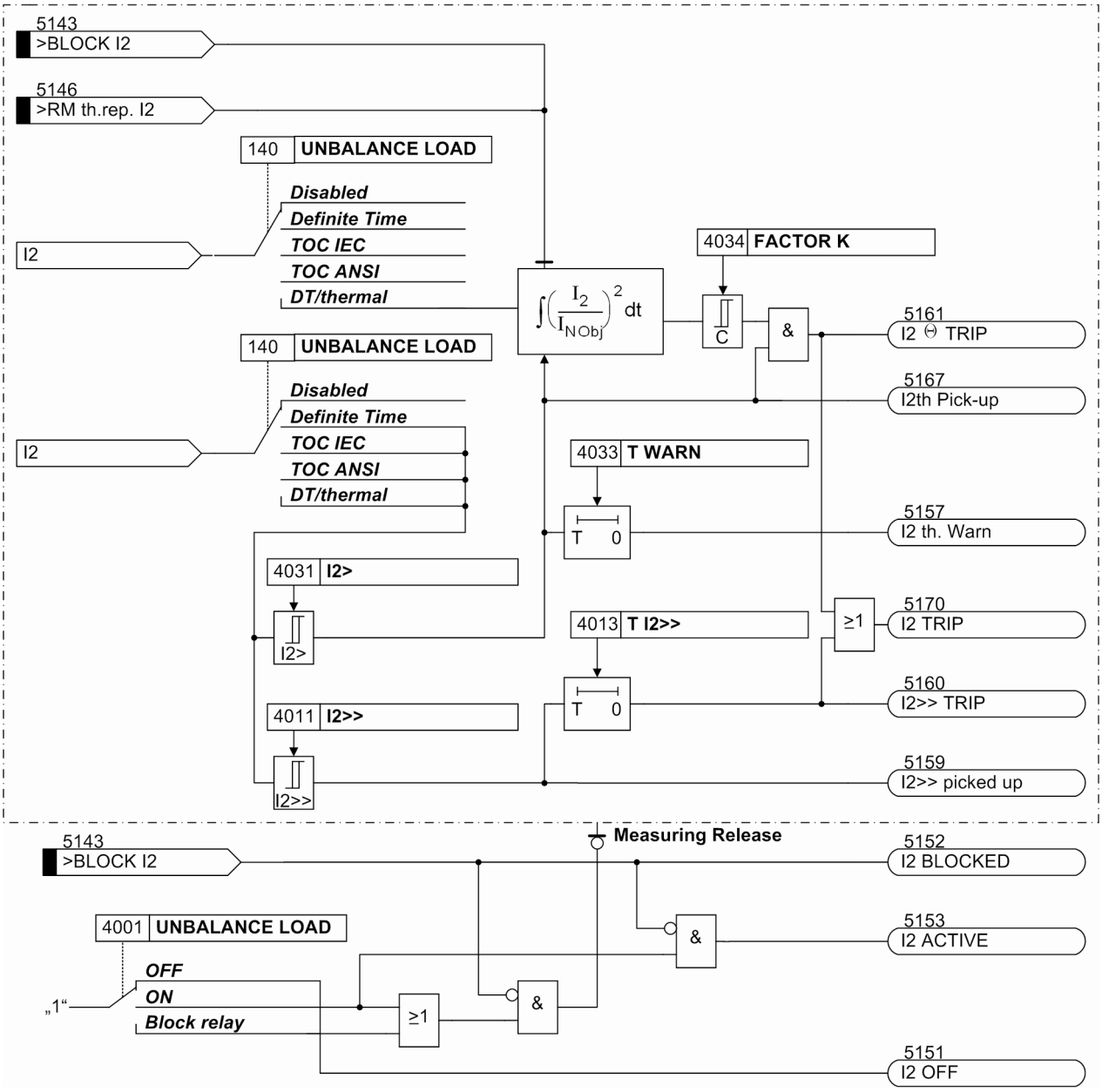

Figure 2-96 Logic diagram of the asymmetrical load protection - illustrated for the thermal stage with I>> stage (simplified)

2.8.2 Setting Notes

General

Unbalanced load protection only makes sense with three-phase protected objects. For **PROT. OBJECT** = ***1ph Busbar*** or ***1 phase transf.*** (address 105) the following settings are not available.

The characteristic type has been determined during configuration of the functional scope under address 140 **UNBALANCE LOAD** (see section 2.1.3.1). Only the settings for the characteristic selected can be performed here. The inverse time curves I_2>> and I_2> are available in all cases.

The unbalanced load protection must have been assigned to a side of the main protected object or another 3-phase current measuring location (Subsection 2.1.4 under margin heading „Further 3-Phase Protection Functions“). Consider also the assignment of the measured current inputs of the device against the measuring locations (current transformer sets) of the power plant (section 2.1.4 under margin heading „Assignment of 3-phase Measuring Locations“).

In address 4001 **UNBALANCE LOAD** the function can be set to ***ON*** or ***OFF***. The option ***Block relay*** allows to operate the protection but the trip output relay is blocked.



Note

If the unbalanced load protection is assigned to a side of the main protected object, the current values are set referred to the rated current of that side I/I_{NS}, as stated in section 2.1.4. In other cases, current values are set in amps.

Definite Time StagesI_2>>, I_2> (O/C)

The two-stage characteristic enables the user to set the upper stage (address 4011 or 4012 **I2>>**) with a short time delay (address 4013 **T I2>>**) and the lower stage (address 4014 or 4015 **I2>**) with a slightly longer time delay (address 4016 **T I2>**). Stage I_2>, for example, can be used as alarm stage, and stage I_2>> as trip stage.

In most cases, stage I_2>> is set in such manner that it does not pick up in case of phase failure. Setting **I2>>** to a percentage higher than 60 % ensures that no tripping is performed with stage I_2 in case of phase failure.

If power supply with current I is provided via just two phases, the following applies for the inverse current:

$$I_2 = \frac{1}{\sqrt{3}} \cdot I = 0.58 \cdot I$$

On the other hand, with more than 60 % negative sequence current, a two-phase fault in the system may be assumed. Therefore, the delay time **T I2>>** must be coordinated with the time grading of the system.

On line feeders, unbalanced load protection may serve to identify low-current unsymmetrical faults below the pickup values of the time overcurrent protection. The following applies

a phase-to-phase fault with current I corresponds to a negative sequence current:

$$I_2 = \frac{1}{\sqrt{3}} \cdot I = 0.58 \cdot I$$

a phase-to-earth current I corresponds to a negative sequence current:

$$I_2 = \frac{1}{3} \cdot I = 0.33 \cdot I$$

With more than 60% unbalanced load, a two-phase fault can be assumed. The delay time thus needs to be coordinated with the system grading for phase-to-phase faults.

If, for example, the asymmetrical load protection has been assigned to an outgoing feeder, the asymmetrical load protection can be set to very sensitive. However, it must be ensured that no asymmetrical load stage can be picked up be operationally permissible asymmetries. With the preset values and secondary rated current 1 A the following fault sensitivities are obtained:

for 2-pole faults: **I2>** = 0.1 A, i.e. fault current as from approx. 0.18 A,

for 1-pole faults: **I2>** = 0.1 A, i.e. earth fault current as from approx. 0.3 A.

I_N = 5 A results in 5 times the secondary value. Consider the current transformer ratios when setting the device with primary values.

For a power transformer, unbalanced load protection may be used as sensitive protection for low magnitude phase-to-earth and phase-to-phase faults. In particular, this application is well suited for delta-wye transformers where low side phase-to-ground faults do not generate a high side zero sequence current.

Since transformers transform symmetrical currents according to the transformation ratio "TR", the relationship between negative sequence currents and total fault current for phase-to-phase faults and phase-to-earth faults are also valid for the transformer as long as the turns ratio "TR" is taken into consideration.

Considering a power transformer with the following data:

Rated apparent power S_{NT}	= 16 MVA
primary nominal voltage U_N	= 110 kV
secondary nominal voltage U_N	= 20 kV
Vector Group	Dyn5
Primary CT set	100 A/1 A

The following faults may be detected at the low side:

If the pickup setting of the device on the high side is set to **I2>** = 0.1 A, then a phase-to-earth fault current of

$$IX1 = 3 \cdot \frac{110\ kV}{20\ kV} \cdot \frac{100\ A}{1\ A} \cdot 0.1\ A = 165\ A$$

for single-phase,

$$IX2 = \sqrt{3} \cdot \frac{110\ kV}{20\ kV} \cdot \frac{100\ A}{1\ A} \cdot 0.1\ A = 95\ A$$

for two-pole faults can be detected. This corresponds to 36 % and 20 % of the transformer nominal current respectively.

To prevent false operation for faults in other zones of protection, the delay time **T I2>** must be coordinated with the time grading of other relays in the system.

For generators and motors, the setting depends on the permissible unbalanced load of the protected object. If the I_2> stage is set to the continuously permissible negative sequence current, it can be used as an alarm stage with a long time delay. The I_2>> stage is then set to a short-term negative sequence current with the delay time permitted here.

Example:

Motor	$I_{N\ Motor}$	=	545 A
	$I_{2\ dd\ prim}$ / $I_{N\ Motor}$	=	0.11 continuous
	$I_{2\ max\ prim}$ / $I_{N\ Motor}$	=	0.55 for T_{max} = 1 s
Current transformer	TR	=	600 A / 1 A
Setting	I2>	=	0.11 · 545 A = 60 A primary or 0.11· 545 A · (1/600) = 0.10 A secondary

Setting	I2>>	=	0.55 · 545 A = 300 A primary or
			0.55· 545 A · (1/600) = 0.50 A secondary
Delay	T I2>>	=	1 s

The inverse curves (see below) permit a consideration of load imbalance per unit of time. However, especially for generators and motors a better adjustment to the protected object can be achieved with the thermal stage (see below under „Thermal Tripping Characteristic“).

Inverse Time ElementI_{2p} for IEC Characteristics

Having selected an inverse time tripping characteristic the thermal load of a machine caused by unbalanced load can be simulated easily. Use the characteristic which is most similar to the thermal asymmetrical load curve of the machine manufacturer.

With the IEC characteristics (address 140 **UNBALANCE LOAD** = ***TOC IEC***) the following options are available at address 4026 **IEC CURVE**:

- ***Normal Inverse*** (inverse, type A according to IEC 60255-3),
- ***Very Inverse*** (very inverse, type B according to IEC 60255-3),
- ***Extremely Inv.*** (extremely inverse, type C according to IEC 60255-3).

The characteristics and equations they are based on are listed in the „Technical Data“.

If an inverse-time characteristic is selected, it must be noted that a safety factor of about 1.1 has already been included between the pickup value and the setting value. This means that a pickup will only occur if an unbalanced load of about 1.1 times the setting value of **I2p** (address 4021 or 4022) is present.

The corresponding time multiplier is accessible via address 4023 **T I2p**.

The time multiplication factor may also be set to ∞. If set to infinity, the pickup of this function will be indicated but the stage will not trip after pickup. If the inverse time stage is not required, select 140 = **UNBALANCE LOAD** in address ***Definite Time*** when configuring the protection functions.

If under address 4025 **I2p DROP-OUT** the ***Disk Emulation***is set, dropout is thus produced in accordance with the dropout characteristic, as described in the function description of the asymmetrical load protection under margin heading „Dropout Behaviour“.

The definite time stages as discussed above under „Definite Time Stages I_2>>, I_2>“ can be used in addition to the inverse-time stage as alarm and tripping stages.

Definite Time Tripping I_{2p} for ANSI Characteristics

The thermal behaviour of a machine can be closely replicated due to negative sequence by means of an inverse time tripping curve. Use the characteristic which is most similar to the thermal asymmetrical load curve of the machine manufacturer.

With the ANSI characteristics (address 140 **UNBALANCE LOAD** = ***TOC ANSI***) the following is made available in address 4027 **ANSI CURVE**:

- ***Extremely Inv.***,
- ***Inverse***,
- ***Moderately Inv.***, and
- ***Very Inverse***.

The characteristics and the equations they are based on are listed in the „Technical Data“.

If an inverse-time characteristic is selected, it must be noted that a safety factor of about 1.1 has already been included between the pickup value and the setting value.

This means that a pickup will only occur if an unbalanced load of about 1.1 times the setting value of **I2p** (address 4021 or 4022) is present.

The corresponding time multiplier is accessible via address 4024 **D I2p**.

The time multiplication factor may also be set to ∞. If set to infinity, the pickup of this function will be indicated but the stage will not trip after pickup. If the inverse time stage is not required, select 140 = **UNBALANCE LOAD** in address ***Definite Time*** when configuring the protection functions.

If under address 4025 **I2p DROP-OUT** the ***Disk Emulation*** has been set, dropout is thus produced in accordance with the dropout characteristic, as described in the function description of the asymmetrical load protection under margin heading „Drop-out Behaviour“.

The „Definite Time StagesI_2>>, I_2>“ as discussed above can be used in addition to the inverse-time stage as alarm and tripping stages.

Thermal Tripping Characteristic

In case of generators and motors, the thermal stage permits a good adjustment of the asymmetrical load protection to the thermal load capacity of the machine due to the asymmetrical load. The first characteristic value is the maximum permanent permissible negative sequence current. For machines of up to 100 MVA with non-salient pole rotors, this typically amounts to a value in a range from 6 % to 8 % of the nominal machine current, and with salient-pole rotors at least 12 %. For larger machines and in cases of doubt, please refer to the instructions of the machine manufacturer. Set this value under address 4031 **I2>**.

As the relevant measuring location for asymmetrical load is usually assigned to the side of the machine to be protected, a conversion of the pickup value is not required, i.e. during permanent permissible asymmetrical load of, for example, 11% it can be set directly under address 4031 **I2>**:

I2> = 0,11 [I/I_{nSide}].

If, however, the asymmetrical load protection must be set in amps secondary during operation, the machine values must be converted.

Example:

Machine	I_N = 483 A
	I_{2perm} = 11 % (salient-pole machine)
Current transformer	500 A/5 A

results under address 4033 in the secondary value

$$I_{2perm} = 483\ A \cdot \frac{5\ A}{500\ A} \cdot 0.11 = 0.53\ A$$

I2> = 0.53 [A].

This permanently permissible negative system current is simultaneously the pickup threshold for the thermal asymmetrical load protection and also the limit for the asymmetrical load warning stage. The delay of the warning indication can be set under address 4033 **T WARN**. Usually approx. 20 s.

The asymmetry factor **FACTOR K** (address 4034) is a measure for the thermal stress of the rotor. It indicates the time for which 100 % asymmetrical load are permissible and corresponds with the permissible thermal energy loss ($K = (I/I_N)^2 \cdot t$). It is indicated by the machine manufacturer or it can be seen on the asymmetrical load diagram of the machine.

In example, figure 2-97, the permanently permissible asymmetrical load amounts to 11 % of the machine internal current and the K-factor K = 20. As the relevant measuring location for asymmetrical load is usually assigned to the side of the machine to be protected, the setting can be effected directly under address 4034 **FACTOR K**:

FACTOR K = 20.

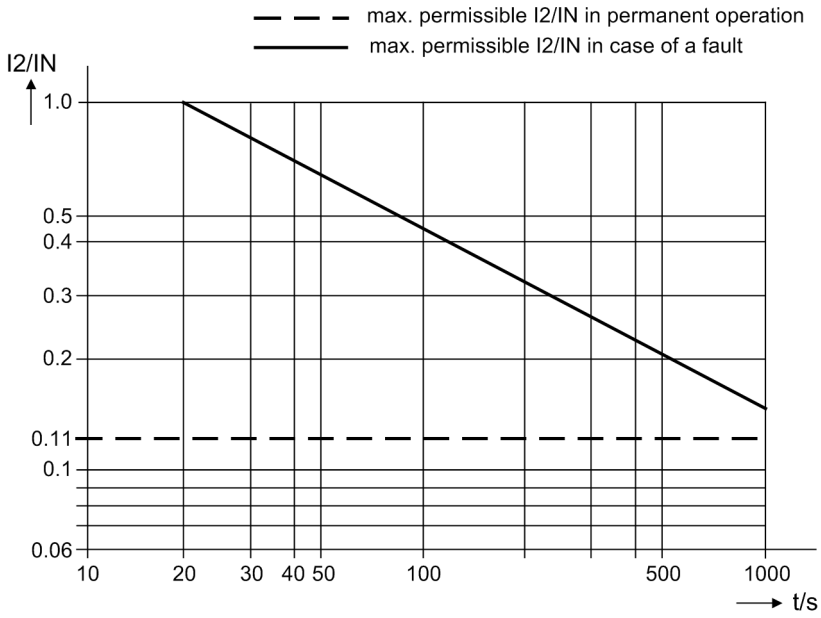

Figure 2-97 Example of a pre-defined asymmetrical load diagram

If, however, the asymmetrical load protection must be set in amps secondary during operation, also the K-factor must be converted as it refers to the machine internal current. The following applies:

$$K_{sec} = K_{Mach} \cdot \left(\frac{I_{N\,Mach}}{I_{N\,CT\,prim}} \right)^2$$

Example:

Machine	I_N = 483 A
	I_{2perm} = 11 % (salient-pole machine)
	K-factor = 20 s
Current transformer	500 A/5 A

results in the setting value under address 4034 **FACTOR K**:

$$\text{FACTOR K} = 20\ \text{s} \cdot \left(\frac{483\ \text{A}}{500\ \text{A}} \right)^2 = 18.7\ \text{s}$$

The setting value 4035 **T COOL DOWN** is defined as the time required by the protected object to cool down from 100 % to 0 % during prior stress with permissible asymmetrical load **I2>**. If the machine manufacturer does not provide this information, the setting value can be calculated by assuming an equal value for cool-down time and

heatup time of the object to be protected. There is the following connection between the asymmetrical factor K and the cool-down time:

$$t_{Cool\text{-}down} = \frac{K}{(I_{2perml} / I_N)^2}$$

Example:

For asymmetry factor K = 20 s and a permanently permissible asymmetrical load of I_2/I_N = 11 % a corresponding cool-down time is derived

$$t_{Cool\text{-}down} = \frac{20\ s}{(0.11)^2} \approx 1650\ s$$

This value does not depend on whether the respective values were set to secondary values, as the current transformation ratios are reduced in numerator and denominator.

The I_2>> stage can additionally be set as reserve stage for network faults, as described above (margin heading „Definite Time StagesI_2>>, I_2> (O/C)“).

Note

The following applies to the parameter overview:

The current values I/I_{NS} refer to the rated current of the side to be protected of the main protected object.

2.8.3 Settings

The table indicates region-specific presettings. Column C (configuration) indicates the corresponding secondary nominal current of the current transformer.

Addr.	Parameter	C	Setting Options	Default Setting	Comments
4001	UNBALANCE LOAD		OFF ON Block relay	OFF	Unbalance Load (Negative Sequence)
4011	I2>>	1A	0.10 .. 3.00 A; ∞	0.50 A	I2>> Pickup
		5A	0.50 .. 15.00 A; ∞	2.50 A	
4012	I2>>		0.10 .. 3.00 I/InS; ∞	0.50 I/InS	I2>> Pickup
4013	T I2>>		0.00 .. 60.00 sec; ∞	1.50 sec	T I2>> Time Delay
4014	I2>	1A	0.10 .. 3.00 A; ∞	0.10 A	I2> Pickup
		5A	0.50 .. 15.00 A; ∞	0.50 A	
4015	I2>		0.10 .. 3.00 I/InS; ∞	0.10 I/InS	I2> Pickup
4016	T I2>		0.00 .. 60.00 sec; ∞	1.50 sec	T I2> Time Delay
4021	I2p	1A	0.10 .. 2.00 A	0.90 A	I2p Pickup
		5A	0.50 .. 10.00 A	4.50 A	
4022	I2p		0.10 .. 2.00 I/InS	0.90 I/InS	I2p Pickup
4023	T I2p		0.05 .. 3.20 sec; ∞	0.50 sec	T I2p Time Dial

Addr.	Parameter	C	Setting Options	Default Setting	Comments
4024	D I2p		0.50 .. 15.00 ; ∞	5.00	D I2p Time Dial
4025	I2p DROP-OUT		Instantaneous Disk Emulation	Instantaneous	I2p Drop-out Characteristic
4026	IEC CURVE		Normal Inverse Very Inverse Extremely Inv.	Extremely Inv.	IEC Curve
4027	ANSI CURVE		Extremely Inv. Inverse Moderately Inv. Very Inverse	Extremely Inv.	ANSI Curve
4031	I2>	1A	0.01 .. 8.00 A; ∞	0.10 A	Continously Permissible Current I2
		5A	0.05 .. 40.00 A; ∞	0.50 A	
4032	I2 tolerance		0.01 .. 0.80 I/InS; ∞	0.16 I/InS	Permissable quiescent unbalanced load
4033	T WARN		0.00 .. 60.00 sec; ∞	20.00 sec	Warning Stage Time Delay
4034	FACTOR K		1.0 .. 100.0 sec; ∞	18.7 sec	Negativ Sequence Factor K
4035	T COOL DOWN		0 .. 50000 sec	1650 sec	Time for Cooling Down

2.8.4 Information List

No.	Information	Type of Information	Comments
5143	>BLOCK I2	SP	>BLOCK I2 (Unbalance Load)
5146	>RM th.rep. I2	SP	>Reset memory for thermal replica I2
5151	I2 OFF	OUT	I2 switched OFF
5152	I2 BLOCKED	OUT	I2 is BLOCKED
5153	I2 ACTIVE	OUT	I2 is ACTIVE
5157	I2 th. Warn	OUT	Unbalanced load: Thermal warning stage
5158	RM th.rep. I2	OUT	Reset memory of thermal replica I2
5159	I2>> picked up	OUT	I2>> picked up
5160	I2>> TRIP	OUT	Unbalanced load: TRIP of current stage
5161	I2 Θ TRIP	OUT	Unbalanced load: TRIP of thermal stage
5165	I2> picked up	OUT	I2> picked up
5166	I2p picked up	OUT	I2p picked up
5167	I2th Pick-up	OUT	Unbalanced load: Pick-up I2 thermal
5168	I2 Adap.fact.	OUT	I2 err.: adverse Adaption factor CT
5170	I2 TRIP	OUT	I2 TRIP
5172	I2 Not avail.	OUT	I2 err.: Not available for this object
5178	I2> TRIP	OUT	I2> TRIP
5179	I2p TRIP	OUT	I2p TRIP

2.9 Thermal Overload Protection

The thermal overload protection prevents damage to the protected object caused by thermal overloading, particularly in case of transformers, rotating machines, power reactors and cables. This protection is not applicable to single-phase busbar protection. It can be assigned to any of the sides of the main protected object, however, not to a non-assigned measuring point.

2.9.1 General

Three methods of overload detection are available in 7UT613/63x:

- Overload calculation using a thermal replica according to IEC 60255-8, without ambient temperature influence
- Overload calculation using a thermal replica according to IEC 60255-8, with ambient temperature influence
- Calculation of the hot-spot temperature and determination of the ageing rate according to IEC 60354.

You may select one of these three methods. The first one is characterised by easy handling and setting; it calculates the overtemperature caused by current heat losses.

For the second one the ambient or coolant temperature is taken into consideration; it calculates the total temperature. It is required that the decisive coolant temperature is signalled to the device via a connected RTD box.

The third needs some knowledge about the protected object and its thermal characteristics and the input of the cooling medium temperature.

7UT613/63xis equipped with two breaker failure protection functions that can be used independent of each other and for different locations of the protective object. One can also work with different starting criteria. The assignment of the protective functions to the protected object are performed as described in section „Assignment of Protection Functions to Measuring Locations/Sides“.

2.9.2 Overload Protection Using a Thermal Replica

Principle

The overload protection of 7UT613/63x can be assigned to one of the sides of the main protected object (selectable). Since the cause of overload is normally outside the protected, the overload current is a through-flow current.

The unit computes the temperature rise according to a thermal single-body model as per the following thermal differential equation

$$\frac{d\Theta}{dt} + \frac{1}{\tau_{th}} \cdot \Theta = \frac{1}{\tau_{th}} \cdot \left(\frac{I}{k \cdot I_{Nobj}} \right)^2$$

T actual valid temperature rise referred to the final temperature rise at maximum permissible current of the assigned side of the protected object $k \cdot I_{N\,Obj}$

τ_{th} thermal time constant for the heating

k k-factor which states the maximum permissible continuous current, referred to the rated current of the assigned side of the protected object

I currently valid RMS current of the assigned side of the protected object

$I_{N\,Obj}$ rated current of the assigned side of the protected object

The protection function thus represents a thermal profile of the equipment being protected (overload protection with memory capability). Both the previous history of an overload and the heat loss to the environment are taken into account.

In steady-state operation the solution of this equation is in an e-function whose asymptote represents the final temperature Θ_{End}. When the overtemperature reaches the first settable temperature threshold Θ_{alarm}, which is below the overtemperature, a warning alarm is given in order to allow a preventive load reduction. When the second temperature threshold, i.e. the final temperature rise or tripping temperature, is reached, the protected object is disconnected from the network. The overload protection can, however, also be set to ***Alarm Only***. In this case only an indication is issued when the final temperature is reached. For setting block. Relay allows to operate the protection but the trip output relay is blocked.

The temperature rises are calculated separately for each phase in a thermal replica from the square of the respective phase current. This guarantees a true RMS value measurement and also includes the effect of harmonic content. The maximum calculated temperature rise of the three phases is decisive for evaluation of the thresholds.

The maximum permissible continuous thermal overload current I_{max} is described as a multiple of the nominal current $I_{N\ Obj}$:

$I_{max} = k \cdot I_{N\ Obj}$

$I_{N\ Obj}$ is the rated current of the assigned side of the protected object:

- For power transformers, the rated power of the assigned winding is decisive. The device calculates this rated current from the rated apparent power of the transformer and the rated voltage of the assigned winding. For transformers with tap changer, the non-regulated side must be used.
- For generators, motors, or reactors, the rated object current is calculated by the device from the set rated apparent power and the rated voltage.
- For short lines, branchpoints or busbars, the rated current of the protected object is directly set.

In addition to the k-factor, the thermal time constant τ_{th} as well as the alarm temperature Θ_{warn} must be entered as settings of the protection.

Apart from the thermal alarm stage, the overload protection also includes a current overload alarm stage I_{warn}, which may give an early warning that an overload current is imminent, even when the temperature rise has not yet reached the alarm or trip temperature rise values.

The overload protection can be blocked via a binary input. In doing so, the thermal images are also reset to zero.

Standstill Time Constant in Machines

The differential equation mentioned above assumes a constant cooling represented by the thermal time constant $\tau_{th} = R_{th} \cdot C_{th}$ (thermal resistance $\times$ thermal capacity). However, the thermal time constant of a self-ventilated machine during standstill differs substantially from that during operation due to the missing ventilation.

Thus, in this case, two time constants exist. This must be considered in the thermal replica. The time constant for cooling is derived from the thermal time constant multiplied by the a factor (usually > 1).

Stand-still of the machine is assumed when the current drops below the threshold **PoleOpenCurr.S1**, **PoleOpenCurr.S2** to **PoleOpenCurr.S5** (the minimum current of the feeding side below which the protected object is assumed to be switched off, refer also to Subsection 2.1.5).

Motor Startup

On startup of electrical machines the overtemperature calculated by the thermal replica may exceed the alarm overtemperature or even the trip overtemperature. In order to avoid an alarm or trip, the starting current is acquired and the resulting increase of temperature rise is suppressed. This means that the calculated temperature rise is kept constant as long as the starting current is detected.

Emergency Starting of Machines

When machines must be started for emergency reasons, operating temperature above the maximum permissible operating temperature can be allowed by blocking the tripping signal via a binary input („>Emer.Start O/L“). After startup and dropout of the binary input, the thermal replica may still be greater than the trip temperature rise. Therefore the thermal replica features a settable run-on time (**T EMERGENCY**) which is started when the binary input drops out. It also suppresses the trip command. Tripping by the overload protection will be defeated until the time interval has lapsed. This binary input only affects the trip command. There is no effect on fault recording, nor does the thermal replica reset.

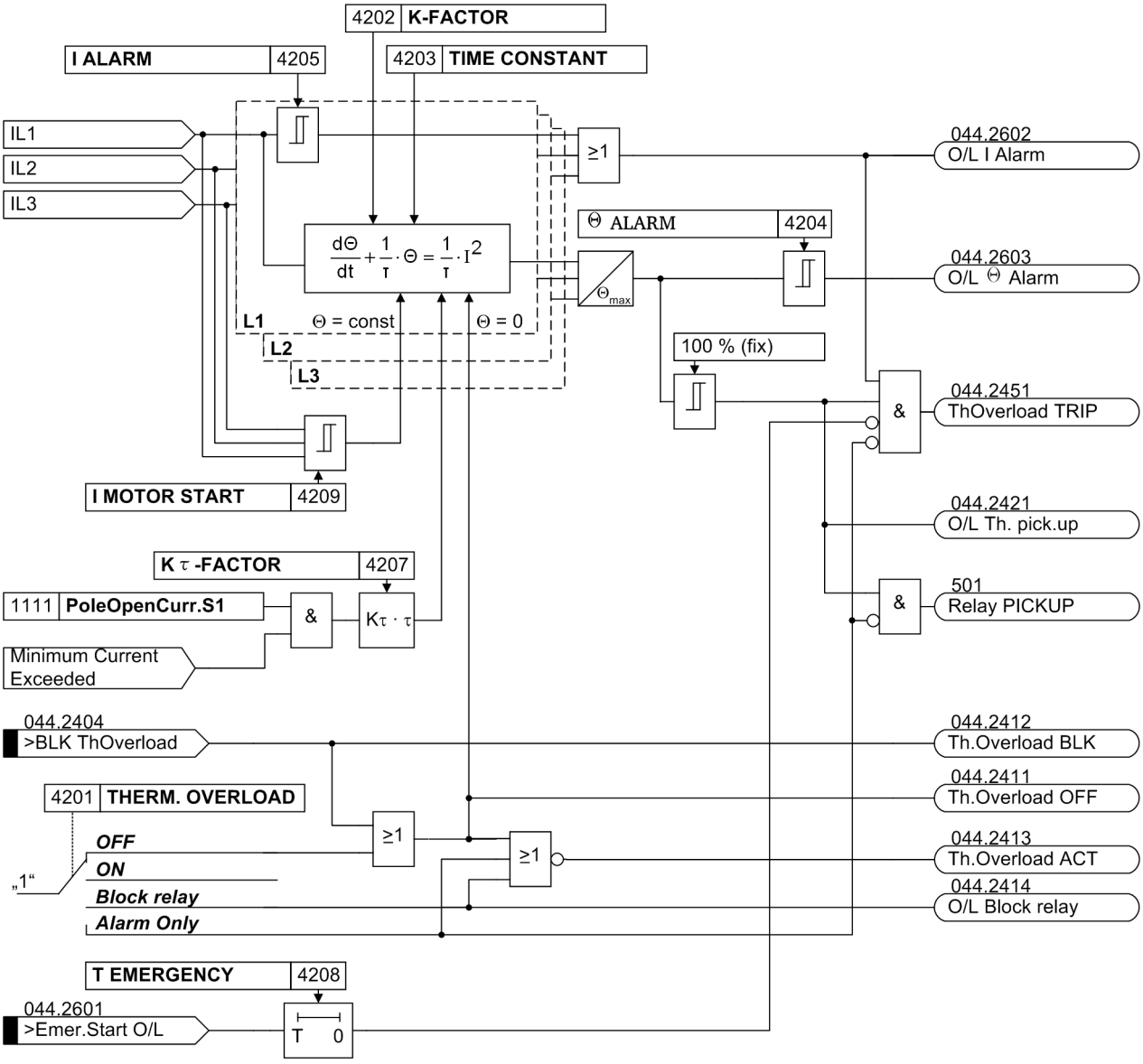

Figure 2-98 Logic diagram of the thermal overload protection (simplified)

2.9.3 Overload protection using a thermal replica with ambient temperature influence

Principle

The calculation basis is based on those of the overload protection, according to Section „Overload protection with Thermal Replica“, the ambient temperature, usually the coolant temperature, is however taken into consideration.

The ambient or coolant temperature has to be measured with a temperature detector in the protected object. The user can install up to 12 temperature measuring points in the protected object. Via one or two RTD boxes and a serial data connection the measuring points inform the overload protection of the 7UT613/63x about the local coolant temperature. One of these points is selected and relevant for the temperature calculation in the overload protection.

The thermal differential equation in Section „Overload Protection using a Thermal Replica“ is extended by one term that considers the ambient temperature ϑ_U. For this the „cold“ state with ϑ_U = 40 °C or 104 °F is assumed (temperature without heating itself). This temperature difference is scaled to the maximum admissible temperature and then designated with Θ_U. The thermal differential equation is

$$\frac{d\Theta}{dt} + \frac{1}{\tau_{th}} \cdot \Theta = \frac{1}{\tau_{th}} \cdot \left(\frac{I}{k \cdot I_{N\,obj}} \right)^2 + \frac{1}{\tau_{th}} \cdot \Theta_U$$

Otherwise the function is the same, as in Section „Overload Protection with a thermal Replica“. To create the relation between current and temperature, the device needs the temperature at rated current of the protected object.

In the event of failure of the temperature input via the thermobox, the device works with an accepted temperature of 40 °C or 104 °F. The result shows the same conditions as with the thermal protection without ambient temperature (Section „Overload Protection with a Thermal Replica“).

2.9.4 Hot-Spot Calculation and Determination of the Ageing Rate

The overload calculation according to IEC 60354 calculates two quantities relevant for the protection function: the relative ageing and the hot-spot temperature in the protected object. The user can install up to 12 temperature measuring points in the protected object. Via one or two RTD boxes and a serial data connection the measuring points inform the overload protection of the 7UT613/63x about the local coolant temperature. **One** of these points is selected to form the relevant point for hot-spot calculation. This point should be situated at the insulation of the upper inner turn of the winding since this is the location of the hottest temperature.

The relative ageing is acquired cyclically and summed up to a total ageing sum.

Cooling Methods

The hot-spot calculation is dependent on the cooling method. Air cooling is always available. Two different methods are distinguished:

- **AN** (**A**ir **N**atural): natural air circulation and
- **AF** (**A**ir **F**orced): forced air circulation (by means of ventilation).

If extra liquid coolants are available, the following types of coolants can be used:

- ***ON*** (**O**il **N**natural = (naturally circulating oil): Because of emerging differences in temperature the coolant (oil) moves within the tank. The cooling effect is not very intense due to its natural convection. This cooling variant, however, is almost noiseless.
- ***OF*** (**O**il **N**atural = forced oil circulation): An oil pump makes the coolant (oil) move within the tank. The cooling effect of this method is therefore more intense than with the ON method.
- ***OD*** (**O**il **D**irected = forced-directed oil circulation): The coolant (oil) is directed through the tank. Therefore the oil flow is intensified for sections which are extremely temperature-intensive. Therefore, the cooling effect is very good. This method has the lowest temperature rise.

Hot-Spot Calculation

The hot-spot temperature of the protected object is an important status value. The hottest spot relevant for the life-time of the transformer is usually situated at the insulation of the upper inner turn. Generally the temperature of the coolant increases from the bottom upwards. The cooling method, however, affects the rate of the temperature drop.

The hot-spot temperature consists of two parts:

- the temperature at the hottest spot of the coolant (included via RTD-box),
- the temperature rise of the winding turn caused by the transformer load.

RTD box 7XV5662-xAD can be used to acquire the temperature of the hottest spot. It captures the temperature value and transmits these to the respective interface of device7UT613/63x. The RTD box 7XV5662-xAD is able to acquire the temperature at up to 6 points of the transformer tank. Up to two RTD boxes of this type can be connected to a 7UT613/63x.

The device calculates the hot-sport temperature from these data and the settings of the main properties. When a settable threshold (temperature alarm) is exceeded, an annunciation and/or a trip is generated.

Hot-spot calculation is done with different equations depending on the cooling method.

For ***ON***–cooling and ***OF***–cooling:

$$\Theta_h = \Theta_o + H_{gr} \cdot k^Y$$

For ***OD***-cooling:

$$\Theta_h = \Theta_o + H_{gr} \cdot k^Y \qquad \text{for } k \le 1$$

$$\Theta_h = \Theta_o + H_{gr} \cdot k^Y + 0.15 \cdot [(\Theta_o + H_{gr} \cdot k^Y) - 98^\circ\,C] \qquad \text{for } k \le 1$$

Θ_h Temperature of the hot spot

Θ_o top oil temperature

H_{gr} hot-spot factor

k load factorI/I_N (measured)

Y winding exponent

In this aspect, the load factor I/I_N is determined from the currents of that side to which the overload protection is assigned. The phase information is taken from the concerned phase in case of generators, motors, etc., or y- or z-connected transformer windings; in case of delta-connected transformer windings the difference current is taken. The rated current is that of the corresponding side.

Ageing Rate Calculation

The life-time of a cellulose insulation refers to a temperature of 98 °C or 208.4 °F in the direct environment of the insulation. Experience shows that an increase of 6K means half the life-time. For a temperature which defers from the basic value of 98 °C (208.4 °F), the relative ageing rate B is given by

$$V = \frac{\text{Ageing at } \Theta_h}{\text{Ageing at } 98^\circ\,C} = 2^{(\Theta_h - 98^\circ\,C)/6}$$

The mean value of the relative ageing rate L is given by the calculation of the mean value of a certain period of time, i.e. from T1 to T2

$$L = \frac{1}{T_2 - T_1} \cdot \int_{T_1}^{T_2} V \, dt$$

With constant rated load, the relative ageing rate L is equal to 1. For values greater than 1, accelerated ageing applies, e.g. if L=2 only half of the life-time is expected compared to the life-time under nominal load conditions.

According to IEC, the ageing range is defined from 80 °C to 140 °C. This is the operating range of the ageing calculation: Temperatures below 80 °C (176 °F) do not extend the calculated ageing rate; values greater than 140 °C (284 °F) do not reduce the calculated ageing rate.

The above-described relative ageing calculation only applies to the insulation of the winding and cannot be used for other failure causes.

Output of Results

The hot-spot temperature is calculated for the winding which corresponds to the side of the protected object configured for overload protection (Subsection 2.1.4, margin heading „Further 3-phase Protection Functions“, address 442). The calculation includes the current of that side and the cooling temperature measured at a certain measuring point. The phase information is taken from the concerned phase in case of generators, motors, etc., or wye- or zigzag-connected transformer windings; in case of delta-connected transformer windings the phase-difference currents are decisive which correspond to the current flowing in the winding.

There are two thresholds which can be set. They output a warning (Stage 1) and an alarm (Stage 2) signal. When the alarm signal is assigned to a trip output, it can also be used for tripping the circuit breaker(s).

For the middle ageing rate, there is also a threshold for each of the warning and the alarm signal.

The status can be read out from the operational measured values at any time. The information includes:

- hot-spot temperature for each winding in °C or °F (as configured),
- relative ageing rate expressed in per unit,
- load backup up to warning signal (Stage 1) expressed in per cent,
- load backup up to alarm signal (Stage 2) expressed in per cent.

Further limit values can be set on the thermobox itself, as in Section „RTD-Boxes for Overload Recognition“

2.9.5 Setting Notes

General



Note

The first thermal overload protection is described in the setting instructions. The parameter addresses and message numbers of the second thermal overload protection are described at the end of the setting instructions under „Additional Thermal Overload Protection Functions“.

The overload protection can be assigned to any desired side of the protected object. Since the cause of the overload current is outside the protected object, the overload current is a through-flowing current, the overload protection may be assigned to a feeding or a non-feeding side. When setting the assignment of the protection functions to the sides of the protected object according to Subsection 2.1.4, margin heading „Further 3-Phase Protection functions“, you have performed this assignment under address 442 **THERM. O/L AT**. Respective notes are given here.

Three methods are available for overload detection, as set out above. During configuration of the functional scope (section 2.1.3.1) it was set under address 142 **THERM. OVERLOAD** whether the overload protection must function according to the thermal replica (**THERM. OVERLOAD** = ***th rep w.o. sen***), if necessary, under inclusion of the environmental or coolant temperature (**THERM. OVERLOAD** = ***th repl w. sens***) or whether the hot-spot calculation according to IEC 60354 must be executed (**THERM. OVERLOAD** = ***IEC354***). In the latter two cases, at least one RTD-box 7XV5662-xAD must be connected to the device in order to digitally inform the device about the coolant temperature. The required data for the RTD-box were set under address 191 **RTD CONNECTION** (section 2.1.3.1).

Under address 4201 **THERM. OVERLOAD** overload protection ***ON*** or ***OFF*** can be set. If address 142 **THERM. OVERLOAD** has been set to ***th rep w.o. sen*** during configuration of the functional scope, the setting ***Alarm Only*** is also possible. With that latter setting the protection function is active but only outputs an alarm when the tripping temperature rise is reached, i.e. the output function is not active. The option ***Block relay*** allows to operate the protection but the trip output relay is blocked.

K-Factor

The rated current of the side of the main protected object which is assigned to the overload protection is taken as the base current for detecting an overload. The setting factor k is set in address 4202 **K-FACTOR**. It is determined by the relation between the permissible thermal continuous current and this rated current:

$$k = \frac{I_{max}}{I_{N\ obj}}$$

The permissible continuous current is at the same time the current at which the e-function of the overtemperature has its asymptote.

When using the method with a thermal replica, it is not necessary to evaluate any absolute temperature nor the trip temperature since the trip temperature rise is equal to the final temperature rise at $k \cdot I_{N\ Obj}$. Manufacturers of electrical machines usually state the permissible continuous current. If no data are available, the **K-FACTOR** is set to 1.1 times the rated current of the assigned side of the protected object. For cables, the permissible continuous current depends on the cross-section, the insulation material, the design and the method of installation, and can be derived from the relevant

tables. As the nominal data of the protected object and the current transformer ratios are known to the device, the **K-FACTOR** can be set immediately.

When using the method with hot-spot calculation according to IEC 60354, setting **K-FACTOR** = 1 is advisable as all remaining parameters refer to the rated current of the assigned side of the protected object.

Time Constant τ for Thermal Replica

The thermal time constant τ_{th} for the thermal replica is set under address 4203 **TIME CONSTANT**. This is also provided by the manufacturer.

Please note that the time constant is set in minutes. Quite often other values for determining the time constant are stated which can be converted into the time constant as follows:

1-s current

$$\frac{\tau_{th}}{\text{min}} = \frac{1}{60} \cdot \left(\frac{\text{permissible 1 s current}}{\text{permissible continuous current}} \right)^2$$

permissible current for application time other than 1 s, e.g. for 0.5 s

$$\frac{\tau_{th}}{\text{min}} = \frac{0.5}{60} \left(\frac{\text{permissible 0.5-s current}}{\text{permissible continuous current}} \right)^2$$

t6-time; this is the time in seconds for which a current of 6 times the rated current of the protected object may flow

$$\frac{\tau_{th}}{\text{min}} = 0.6 \cdot t_6$$

Calculation examples:

Cable with

permissible continuous current 322 A

permissible 1-s current 13.5 kA

$$\frac{\tau_{th}}{\text{min}} = \frac{1}{60} \cdot \left(\frac{13500\ \text{A}}{322\ \text{A}} \right)^2 = \frac{1}{60} \cdot 42^2 = 29.4$$

Setting value **TIME CONSTANT** = 29.4 min

Motor with t6–time 12 s

$$\frac{\tau_{th}}{\text{min}} = 0.6 \cdot 12\ \text{s} = 7.2$$

Setting value **TIME CONSTANT** = 7.2 min

For rotating machines, the thermal time constant set under **TIME CONSTANT** is valid for as long as the machine is running. The machine will cool down significantly slower during stand-still or running down, if it is self-ventilated. This phenomenon is considered by a higher stand-still time constant **Kτ-FACTOR** (address 4207) which is set as a factor of the normal time constant. This parameter can only be set with DIGSI under **Additional Settings**.

If it not necessary to distinguish between different time constants, e.g. with cables, transformers, reactors, etc., retain the factor **Kτ-FACTOR** = **1.0** (default setting).

Environment Temperature Influence in Thermal Replica

If the environmental or coolant temperature must be taken into consideration in the thermal replica, the device must be informed as to which of the temperature detectors (RTD = Resistance Temperature Detector) is applicable. With RTD-box 7XV5662–xAD up to 6 detectors are possible, with 2 boxes up to 12. In case of connection of one RTD-box, under address 4210 **TEMPSENSOR RTD** the number of the applicable temperature detector (1 to 6) must be set, in case of connection of two RTD-boxes under address 4211 **TEMPSENSOR RTD** (1 to 12). Only such address is always available that corresponds with the setting in accordance with the functional scope (section 2.1.3.1) under address 191 **RTD CONNECTION**.

All calculations are performed with standardised quantities. The ambient temperature must also be standardised. The temperature with nominal current of the protected object is used as standardised quantity. Set this temperature under address 4212 **TEMP. RISE I** in °C or under address 4213 **TEMP. RISE I** in °F, depending on which temperature unit was selected in accordance with section 2.1.4.

Alarm Stages with Thermal Replica

By setting a thermal alarm stage Θ **ALARM** (address 4204) an alarm can be released before the tripping temperature is reached, so that a trip can be avoided by early load reduction or by switching over. The percentage refers to the tripping temperature rise. Note that the final temperature rise is proportional to the square of the current.

Example:

k-factor k = 1.1

Nominal current flow results in the following temperature rise:

$$\Theta = \frac{1}{1.1^2} = 0.826$$

The thermal warning stage should be set above temperature rise at nominal current (82.6 %). A sensible setting value would be Θ **ALARM** = 90 %.

The current overload alarm setpoint **I ALARM** (address 4205) is referred to the rated current of the side and should be set equal to or slightly below the permissible continuous current $k \cdot I_{N\,Obj}$. It can also be used instead of the thermal alarm stage. In this case, the thermal alarm stage is set to 100 % and is thus virtually ineffective.

Emergency Start for Motors

The run-on time value to be entered at address 4208 **T EMERGENCY** must ensure that, after an emergency start and dropout of the binary input , the trip command is blocked until the thermal replica has fallen below the dropout threshold. This parameter can only be set with DIGSI under **Additional Settings**.

The startup itself is only recognised if the startup current 4209 set in address **I MOTOR START** is exceeded. Under each load and voltage condition during motor start, the value must be overshot by the actual startup current. With short-time permissible overload the value must not be reached. This parameter can only be set with DIGSI under **Additional Settings**. For other protected objects retain setting ∞. The emergency start is thus disabled.

Temperature Detector for Hot-spot Calculation

For the hot-spot calculation according to IEC 60354 the device must be informed on the type of resistance temperature detectors (RTD) that will be used for measuring the oil temperature, the one relevant for the hot-spot calculation and ageing determination. With a RTD-box 7XV5662x–xAD up to 6 detectors are possible, with 2 boxes up to 12. On connection of **one** RTD-box set under address 4220 **OIL-DET. RTD** the number of the relevant temperature detector (**1** to **6**), on connection of **two** RTD-boxes under address 4221 **OIL-DET. RTD** (**1** to **12**). Only **such** address is always available

that corresponds with the setting in accordance with the functional scope (section 2.1.3.1) under address 191 **RTD CONNECTION**.

The characteristic values of the temperature detectors are set separately, see section RTD-boxes 2.10).

Hot-Spot Stages

There are two annunciation stages for hot-spot temperature. To set a specific hot-spot temperature value (expressed in °C), which is meant to generate the warning signal (stage 1), use address 4222 **HOT SPOT ST. 1**. Use address 4224 **HOT SPOT ST. 2** to indicate the corresponding alarm temperature (stage 2). It can also be used for the tripping of circuit breakers if the outgoing message (No 1542) is allocated to a trip relay.

If address 276**TEMP. UNIT** is set to degree Fahrenheit during configuration of the **Power System Data 1**, thresholds for warning and alarm temperatures have to be expressed in Fahrenheit at addresses 4223 and 4225.

If the temperature unit is changed in address 276, after having set the thresholds for temperature, these thresholds changed for the temperature unit, must be reset in the respective addresses.

Ageing Rate

For ageing rate L thresholds can also be set, i.e. for the warning signal (Stage 1) in address 4226**AG. RATE ST. 1** and for alarm signal (Stage 2) in address 4227**AG. RATE ST. 2**. This information is referred to the relative ageing, i.e. L=1 is reached at 98°C or 208°F at the hot spot. L > 1 refers to an accelerated ageing, L < 1 to delayed ageing.

Cooling Method and Insulation Data

Set in address 4231 **METH.COOLING** which cooling method is used: ***ON*** = **O**il **N**atural for natural cooling, ***OF*** = **O**il **F**orced for oil forced cooling or ***OD***= **O**il **D**irected for oil directed cooling. The definitions under margin heading „Cooling Methods“ in the function description of the hot-spot calculation.

For hot-spot calculation, the device requires winding exponent Y and the hot-spot to top-oil gradient H_{gr}, that can be set under 4232 **Y-WIND.EXPONENT** and 4233 **HOT-SPOT GR**. If the corresponding information is not available, it can be taken from the IEC 60354. An extract from the corresponding table of the standard with the technical data relevant for this project can be found hereinafter.

Table 2-9 Thermal characteristics of power transformers

Cooling method:		Distribution transformers	Medium and large power transformers		
		ONAN	ON..	OF..	OD..
Winding exponent	Y	1.6	1.8	1.8	2.0
Insulation temperature gradient	H_{gr}	23	26	22	29

Additional Thermal Overload Protection Function

In the aforementioned description, the first thermal overload protection is described respectively. The differences in the parameter addresses and message numbers of the first and second thermal overload protection are illustrated in the following table. The positions marked by x are identical.

	Parameter addresses	Message no.
1. thermal overload protection function	42xx	044.xxxx(.01)
2. thermal overload protection function	44xx	204.xxxx(.01)

2.9.6 Settings

Addresses which have an appended "A" can only be changed with DIGSI, under Additional Settings.

Addr.	Parameter	Setting Options	Default Setting	Comments
4201	THERM. OVERLOAD	OFF ON Block relay Alarm Only	OFF	Thermal Overload Protection
4202	K-FACTOR	0.10 .. 4.00	1.10	K-Factor
4203	TIME CONSTANT	1.0 .. 999.9 min	100.0 min	Thermal Time Constant
4204	Θ ALARM	50 .. 100 %	90 %	Thermal Alarm Stage
4205	I ALARM	0.10 .. 4.00 I/InS	1.00 I/InS	Current Overload Alarm Setpoint
4207A	Kτ-FACTOR	1.0 .. 10.0	1.0	Kt-FACTOR when motor stops
4208A	T EMERGENCY	10 .. 15000 sec	100 sec	Emergency Time
4209A	I MOTOR START	0.60 .. 10.00 I/InS; ∞	∞ I/InS	Current Pickup Value of Motor Starting
4210	TEMPSENSOR RTD	1 .. 6	1	Temperature sensor connected to RTD
4211	TEMPSENSOR RTD	1 .. 12	1	Temperature sensor connected to RTD
4212	TEMP. RISE I	40 .. 200 °C	100 °C	Temperature Rise at Rated Sec. Curr.
4213	TEMP. RISE I	104 .. 392 °F	212 °F	Temperature Rise at Rated Sec. Curr.
4220	OIL-DET. RTD	1 .. 6	1	Oil-Detector conected at RTD
4221	OIL Sensor RTD	1 .. 12	1	Oil sensor connected to RTD
4222	HOT SPOT ST. 1	98 .. 140 °C	98 °C	Hot Spot Temperature Stage 1 Pickup
4223	HOT SPOT ST. 1	208 .. 284 °F	208 °F	Hot Spot Temperature Stage 1 Pickup
4224	HOT SPOT ST. 2	98 .. 140 °C	108 °C	Hot Spot Temperature Stage 2 Pickup
4225	HOT SPOT ST. 2	208 .. 284 °F	226 °F	Hot Spot Temperature Stage 2 Pickup
4226	AG. RATE ST. 1	0.200 .. 128.000	1.000	Aging Rate STAGE 1 Pickup
4227	AG. RATE ST. 2	0.200 .. 128.000	2.000	Aging Rate STAGE 2 Pickup
4231	METH. COOLING	ON OF OD	ON	Method of Cooling
4232	Y-WIND.EXPONENT	1.6 .. 2.0	1.6	Y-Winding Exponent
4233	HOT-SPOT GR	22 .. 29	22	Hot-spot to top-oil gradient

2.9.7 Information List

No.	Information	Type of Information	Comments
044.2404	>BLK ThOverload	SP	>BLOCK Thermal Overload Protection
044.2411	Th.Overload OFF	OUT	Thermal Overload Protection OFF
044.2412	Th.Overload BLK	OUT	Thermal Overload Protection BLOCKED
044.2413	Th.Overload ACT	OUT	Thermal Overload Protection ACTIVE
044.2421	O/L Th. pick.up	OUT	Thermal Overload picked up
044.2451	ThOverload TRIP	OUT	Thermal Overload TRIP
044.2491	O/L Not avail.	OUT	Th. Overload Not available for this obj.
044.2494	O/L Adap.fact.	OUT	Th. Overload err.:adverse Adap.factor CT
044.2601	>Emer.Start O/L	SP	>Emergency start Th. Overload Protection
044.2602	O/L I Alarm	OUT	Th. Overload Current Alarm (I alarm)
044.2603	O/L Θ Alarm	OUT	Thermal Overload Alarm
044.2604	O/L ht.spot Al.	OUT	Thermal Overload hot spot Th. Alarm
044.2605	O/L h.spot TRIP	OUT	Thermal Overload hot spot Th. TRIP
044.2606	O/L ag.rate Al.	OUT	Thermal Overload aging rate Alarm
044.2607	O/L ag.rt. TRIP	OUT	Thermal Overload aging rate TRIP
044.2609	O/L No Th.meas.	OUT	Th. Overload No temperature measured

2.10 RTD-Boxes for Overload Detection

For thermal overload protection, taking into consideration the ambient or coolant temperature as well as the overload protection with hot-spot calculation and relative ageing rate determination, the coolant temperature in the protected object or the temperature of the hottest spot of the winding (e.g. of a transformer) is required. At least one resistance temperature detector (RTD) must be installed at the hot-spot location which informs the device about this temperature via an RTD box 7XV5662-xAD. One RTD box is able to process up to 6 RTDs. One or two RTD boxes 7XV5662-xAD can be connected to the device.

2.10.1 Function Description

One RTD box 7XV5662-xAD can be used for up to 6 measuring points (RTDs) in the protected object, e.g. in the transformer tank. The RTD box detects the coolant temperature of each measuring point from the resistance value of the temperature detectors (Pt 100, Ni 100 or Ni 120) connected with a two- or three-wire line and converts it to a digital value. The digital values are output at the serial interface RS485.

One or two RTD boxes can be connected to the service interface of the 7UT613/63x. Thus, up to 6 or 12 measuring points (RTDs) can be processed. For each temperature detector, characteristic data as well as alarm (stage 1) and trip (stage 2) can be set.

The RTD box also acquires thresholds of each single measuring point. The information is then passed on via an output relay. For further information, refer to the instruction manual of the RTD box.

2.10.2 Setting Notes

General

Set the type of temperature detector for RTD 1 (temperature sensor for measuring point 1) at address 9011 **RTD 1 TYPE**. You can choose between ***Pt 100*** Ω, ***Ni 120*** Ω and ***Ni 100*** Ω. If no temperature detector is available for RTD 1, set **RTD 1 TYPE** = ***Not connected***. This parameter can only be set with DIGSI under **Additional Settings**.

Address 9012 **RTD 1 LOCATION** informs the device regarding the mounting location of RTD 1. You can choose between ***Oil***, ***Ambient***, ***Winding***, ***Bearing*** and ***Other***. This parameter can only be set with DIGSI under **Additional Settings**.

Furthermore, in the 7UT613/63x an alarm temperature (stage 1) and a tripping temperature (stage 2) can be set. Depending on the temperature unit selected in the power system data in address 276 **TEMP. UNIT**, the alarm temperature can be selected in degree Celsius (°C) in address 9013 **RTD 1 STAGE 1** or in degree Fahrenheit (°F) in address 9014 **RTD 1 STAGE 1**. The trip temperature expressed in Celsius (°C) is set in address 9015 **RTD 1 STAGE 2**, and under address 9016 **RTD 1 STAGE 2** it can be set in degree Fahrenheit (°F) .

Temperature Detectors

The setting options and addresses of all connected temperature detectors for the first and the second RTD-box are listed in the following parameter overview.

2.10.3 Settings

Addresses which have an appended "A" can only be changed with DIGSI, under Additional Settings.

Addr.	Parameter	Setting Options	Default Setting	Comments
9011A	RTD 1 TYPE	Not connected Pt 100 Ω Ni 120 Ω Ni 100 Ω	Pt 100 Ω	RTD 1: Type
9012A	RTD 1 LOCATION	Oil Ambient Winding Bearing Other	Oil	RTD 1: Location
9013	RTD 1 STAGE 1	-50 .. 250 °C; ∞	100 °C	RTD 1: Temperature Stage 1 Pickup
9014	RTD 1 STAGE 1	-58 .. 482 °F; ∞	212 °F	RTD 1: Temperature Stage 1 Pickup
9015	RTD 1 STAGE 2	-50 .. 250 °C; ∞	120 °C	RTD 1: Temperature Stage 2 Pickup
9016	RTD 1 STAGE 2	-58 .. 482 °F; ∞	248 °F	RTD 1: Temperature Stage 2 Pickup
9021A	RTD 2 TYPE	Not connected Pt 100 Ω Ni 120 Ω Ni 100 Ω	Not connected	RTD 2: Type
9022A	RTD 2 LOCATION	Oil Ambient Winding Bearing Other	Other	RTD 2: Location
9023	RTD 2 STAGE 1	-50 .. 250 °C; ∞	100 °C	RTD 2: Temperature Stage 1 Pickup
9024	RTD 2 STAGE 1	-58 .. 482 °F; ∞	212 °F	RTD 2: Temperature Stage 1 Pickup
9025	RTD 2 STAGE 2	-50 .. 250 °C; ∞	120 °C	RTD 2: Temperature Stage 2 Pickup
9026	RTD 2 STAGE 2	-58 .. 482 °F; ∞	248 °F	RTD 2: Temperature Stage 2 Pickup
9031A	RTD 3 TYPE	Not connected Pt 100 Ω Ni 120 Ω Ni 100 Ω	Not connected	RTD 3: Type
9032A	RTD 3 LOCATION	Oil Ambient Winding Bearing Other	Other	RTD 3: Location
9033	RTD 3 STAGE 1	-50 .. 250 °C; ∞	100 °C	RTD 3: Temperature Stage 1 Pickup

Addr.	Parameter	Setting Options	Default Setting	Comments
9034	RTD 3 STAGE 1	-58 .. 482 °F; ∞	212 °F	RTD 3: Temperature Stage 1 Pickup
9035	RTD 3 STAGE 2	-50 .. 250 °C; ∞	120 °C	RTD 3: Temperature Stage 2 Pickup
9036	RTD 3 STAGE 2	-58 .. 482 °F; ∞	248 °F	RTD 3: Temperature Stage 2 Pickup
9041A	RTD 4 TYPE	Not connected Pt 100 Ω Ni 120 Ω Ni 100 Ω	Not connected	RTD 4: Type
9042A	RTD 4 LOCATION	Oil Ambient Winding Bearing Other	Other	RTD 4: Location
9043	RTD 4 STAGE 1	-50 .. 250 °C; ∞	100 °C	RTD 4: Temperature Stage 1 Pickup
9044	RTD 4 STAGE 1	-58 .. 482 °F; ∞	212 °F	RTD 4: Temperature Stage 1 Pickup
9045	RTD 4 STAGE 2	-50 .. 250 °C; ∞	120 °C	RTD 4: Temperature Stage 2 Pickup
9046	RTD 4 STAGE 2	-58 .. 482 °F; ∞	248 °F	RTD 4: Temperature Stage 2 Pickup
9051A	RTD 5 TYPE	Not connected Pt 100 Ω Ni 120 Ω Ni 100 Ω	Not connected	RTD 5: Type
9052A	RTD 5 LOCATION	Oil Ambient Winding Bearing Other	Other	RTD 5: Location
9053	RTD 5 STAGE 1	-50 .. 250 °C; ∞	100 °C	RTD 5: Temperature Stage 1 Pickup
9054	RTD 5 STAGE 1	-58 .. 482 °F; ∞	212 °F	RTD 5: Temperature Stage 1 Pickup
9055	RTD 5 STAGE 2	-50 .. 250 °C; ∞	120 °C	RTD 5: Temperature Stage 2 Pickup
9056	RTD 5 STAGE 2	-58 .. 482 °F; ∞	248 °F	RTD 5: Temperature Stage 2 Pickup
9061A	RTD 6 TYPE	Not connected Pt 100 Ω Ni 120 Ω Ni 100 Ω	Not connected	RTD 6: Type
9062A	RTD 6 LOCATION	Oil Ambient Winding Bearing Other	Other	RTD 6: Location

Addr.	Parameter	Setting Options	Default Setting	Comments
9063	RTD 6 STAGE 1	-50 .. 250 °C; ∞	100 °C	RTD 6: Temperature Stage 1 Pickup
9064	RTD 6 STAGE 1	-58 .. 482 °F; ∞	212 °F	RTD 6: Temperature Stage 1 Pickup
9065	RTD 6 STAGE 2	-50 .. 250 °C; ∞	120 °C	RTD 6: Temperature Stage 2 Pickup
9066	RTD 6 STAGE 2	-58 .. 482 °F; ∞	248 °F	RTD 6: Temperature Stage 2 Pickup
9071A	RTD 7 TYPE	Not connected Pt 100 Ω Ni 120 Ω Ni 100 Ω	Not connected	RTD 7: Type
9072A	RTD 7 LOCATION	Oil Ambient Winding Bearing Other	Other	RTD 7: Location
9073	RTD 7 STAGE 1	-50 .. 250 °C; ∞	100 °C	RTD 7: Temperature Stage 1 Pickup
9074	RTD 7 STAGE 1	-58 .. 482 °F; ∞	212 °F	RTD 7: Temperature Stage 1 Pickup
9075	RTD 7 STAGE 2	-50 .. 250 °C; ∞	120 °C	RTD 7: Temperature Stage 2 Pickup
9076	RTD 7 STAGE 2	-58 .. 482 °F; ∞	248 °F	RTD 7: Temperature Stage 2 Pickup
9081A	RTD 8 TYPE	Not connected Pt 100 Ω Ni 120 Ω Ni 100 Ω	Not connected	RTD 8: Type
9082A	RTD 8 LOCATION	Oil Ambient Winding Bearing Other	Other	RTD 8: Location
9083	RTD 8 STAGE 1	-50 .. 250 °C; ∞	100 °C	RTD 8: Temperature Stage 1 Pickup
9084	RTD 8 STAGE 1	-58 .. 482 °F; ∞	212 °F	RTD 8: Temperature Stage 1 Pickup
9085	RTD 8 STAGE 2	-50 .. 250 °C; ∞	120 °C	RTD 8: Temperature Stage 2 Pickup
9086	RTD 8 STAGE 2	-58 .. 482 °F; ∞	248 °F	RTD 8: Temperature Stage 2 Pickup
9091A	RTD 9 TYPE	Not connected Pt 100 Ω Ni 120 Ω Ni 100 Ω	Not connected	RTD 9: Type

Addr.	Parameter	Setting Options	Default Setting	Comments
9092A	RTD 9 LOCATION	Oil Ambient Winding Bearing Other	Other	RTD 9: Location
9093	RTD 9 STAGE 1	-50 .. 250 °C; ∞	100 °C	RTD 9: Temperature Stage 1 Pickup
9094	RTD 9 STAGE 1	-58 .. 482 °F; ∞	212 °F	RTD 9: Temperature Stage 1 Pickup
9095	RTD 9 STAGE 2	-50 .. 250 °C; ∞	120 °C	RTD 9: Temperature Stage 2 Pickup
9096	RTD 9 STAGE 2	-58 .. 482 °F; ∞	248 °F	RTD 9: Temperature Stage 2 Pickup
9101A	RTD10 TYPE	Not connected Pt 100 Ω Ni 120 Ω Ni 100 Ω	Not connected	RTD10: Type
9102A	RTD10 LOCATION	Oil Ambient Winding Bearing Other	Other	RTD10: Location
9103	RTD10 STAGE 1	-50 .. 250 °C; ∞	100 °C	RTD10: Temperature Stage 1 Pickup
9104	RTD10 STAGE 1	-58 .. 482 °F; ∞	212 °F	RTD10: Temperature Stage 1 Pickup
9105	RTD10 STAGE 2	-50 .. 250 °C; ∞	120 °C	RTD10: Temperature Stage 2 Pickup
9106	RTD10 STAGE 2	-58 .. 482 °F; ∞	248 °F	RTD10: Temperature Stage 2 Pickup
9111A	RTD11 TYPE	Not connected Pt 100 Ω Ni 120 Ω Ni 100 Ω	Not connected	RTD11: Type
9112A	RTD11 LOCATION	Oil Ambient Winding Bearing Other	Other	RTD11: Location
9113	RTD11 STAGE 1	-50 .. 250 °C; ∞	100 °C	RTD11: Temperature Stage 1 Pickup
9114	RTD11 STAGE 1	-58 .. 482 °F; ∞	212 °F	RTD11: Temperature Stage 1 Pickup
9115	RTD11 STAGE 2	-50 .. 250 °C; ∞	120 °C	RTD11: Temperature Stage 2 Pickup
9116	RTD11 STAGE 2	-58 .. 482 °F; ∞	248 °F	RTD11: Temperature Stage 2 Pickup

Addr.	Parameter	Setting Options	Default Setting	Comments
9121A	RTD12 TYPE	Not connected Pt 100 Ω Ni 120 Ω Ni 100 Ω	Not connected	RTD12: Type
9122A	RTD12 LOCATION	Oil Ambient Winding Bearing Other	Other	RTD12: Location
9123	RTD12 STAGE 1	-50 .. 250 °C; ∞	100 °C	RTD12: Temperature Stage 1 Pickup
9124	RTD12 STAGE 1	-58 .. 482 °F; ∞	212 °F	RTD12: Temperature Stage 1 Pickup
9125	RTD12 STAGE 2	-50 .. 250 °C; ∞	120 °C	RTD12: Temperature Stage 2 Pickup
9126	RTD12 STAGE 2	-58 .. 482 °F; ∞	248 °F	RTD12: Temperature Stage 2 Pickup

2.10.4 Information List

No.	Information	Type of Information	Comments
14101	Fail: RTD	OUT	Fail: RTD (broken wire/shorted)
14111	Fail: RTD 1	OUT	Fail: RTD 1 (broken wire/shorted)
14112	RTD 1 St.1 p.up	OUT	RTD 1 Temperature stage 1 picked up
14113	RTD 1 St.2 p.up	OUT	RTD 1 Temperature stage 2 picked up
14121	Fail: RTD 2	OUT	Fail: RTD 2 (broken wire/shorted)
14122	RTD 2 St.1 p.up	OUT	RTD 2 Temperature stage 1 picked up
14123	RTD 2 St.2 p.up	OUT	RTD 2 Temperature stage 2 picked up
14131	Fail: RTD 3	OUT	Fail: RTD 3 (broken wire/shorted)
14132	RTD 3 St.1 p.up	OUT	RTD 3 Temperature stage 1 picked up
14133	RTD 3 St.2 p.up	OUT	RTD 3 Temperature stage 2 picked up
14141	Fail: RTD 4	OUT	Fail: RTD 4 (broken wire/shorted)
14142	RTD 4 St.1 p.up	OUT	RTD 4 Temperature stage 1 picked up
14143	RTD 4 St.2 p.up	OUT	RTD 4 Temperature stage 2 picked up
14151	Fail: RTD 5	OUT	Fail: RTD 5 (broken wire/shorted)
14152	RTD 5 St.1 p.up	OUT	RTD 5 Temperature stage 1 picked up
14153	RTD 5 St.2 p.up	OUT	RTD 5 Temperature stage 2 picked up
14161	Fail: RTD 6	OUT	Fail: RTD 6 (broken wire/shorted)
14162	RTD 6 St.1 p.up	OUT	RTD 6 Temperature stage 1 picked up
14163	RTD 6 St.2 p.up	OUT	RTD 6 Temperature stage 2 picked up
14171	Fail: RTD 7	OUT	Fail: RTD 7 (broken wire/shorted)
14172	RTD 7 St.1 p.up	OUT	RTD 7 Temperature stage 1 picked up
14173	RTD 7 St.2 p.up	OUT	RTD 7 Temperature stage 2 picked up
14181	Fail: RTD 8	OUT	Fail: RTD 8 (broken wire/shorted)
14182	RTD 8 St.1 p.up	OUT	RTD 8 Temperature stage 1 picked up

No.	Information	Type of Information	Comments
14183	RTD 8 St.2 p.up	OUT	RTD 8 Temperature stage 2 picked up
14191	Fail: RTD 9	OUT	Fail: RTD 9 (broken wire/shorted)
14192	RTD 9 St.1 p.up	OUT	RTD 9 Temperature stage 1 picked up
14193	RTD 9 St.2 p.up	OUT	RTD 9 Temperature stage 2 picked up
14201	Fail: RTD10	OUT	Fail: RTD10 (broken wire/shorted)
14202	RTD10 St.1 p.up	OUT	RTD10 Temperature stage 1 picked up
14203	RTD10 St.2 p.up	OUT	RTD10 Temperature stage 2 picked up
14211	Fail: RTD11	OUT	Fail: RTD11 (broken wire/shorted)
14212	RTD11 St.1 p.up	OUT	RTD11 Temperature stage 1 picked up
14213	RTD11 St.2 p.up	OUT	RTD11 Temperature stage 2 picked up
14221	Fail: RTD12	OUT	Fail: RTD12 (broken wire/shorted)
14222	RTD12 St.1 p.up	OUT	RTD12 Temperature stage 1 picked up
14223	RTD12 St.2 p.up	OUT	RTD12 Temperature stage 2 picked up

2.11 Overexcitation Protection

The overexcitation protection is used to detect increased overflux or overinduction conditions in generators and transformers, especially in power station unit transformers, which cause impermissible temperature rise in the iron. An increase in induction above the rated value leads very quickly to saturation of the iron core and to large eddy current losses which cause impermissible temperature rise in the iron. This protection is not applicable to single-phase busbar protection.

The overexcitation protection picks up when the permissible limit of induction is exceeded in the core of the protected object (e.g. power station unit transformer). Increased induction occurs, for example, when the power station block is disconnected from the system from full-load, and the voltage regulator either does not operate or does not operate sufficiently fast to control the associated voltage rise. Similarly a decrease in frequency (speed), e.g. in island systems, can cause increased induction in the transformer.

2.11.1 Function Description

Measured Values

The use of the overexcitation protection presumes that measured voltages are connected to the device: This is therefore only possible for 7UT613 and 7UT633. Overexcitation protection makes no sense on 1-phase busbar protection and is, therefore, not available for this application.

The overexcitation protection measures the ration voltage/frequency U/f, which is proportional to the induction B in the iron core (with invariable dimensions).

If the quotient UU/f is set in relation to the voltage and frequency under nominal conditions of the protected object U_{NObj}/f_N, a direct measure of the induction B, referred to the induction B/B_{NObj} under nominal conditions, is achieved. All constant quantities cancel each other:

$$\frac{B}{B_{Nobj}} = \frac{\frac{U}{U_{Nobj}}}{\frac{f}{f_N}} = \frac{U/f}{U_{Nobj}/f_N}$$

The benefit of these referred values is that no explicit calculations are necessary. You can enter all values directly referred to the induction under nominal conditions of the protected object. The device has been informed about the rated values of the protected object and the voltage transformer data when setting the object and transformer data.

The maximum of the three phase-to-phase voltages is decisive for the calculation. The voltages are filtered by numerical algorithms. Monitoring is carried out throughout the frequency tagging range.

Characteristics

The overexcitation protection includes two definite time stages and a further thermal characteristic which latter forms an approximate replica of the temperature rise caused by overflux in the protected object.

As soon as a threshold (warning stage **U/f >**) has been exceeded, the pickup indication is output and a timer **T U/f >** starts. A warning message is transmitted subsequently to the expiration of this timer. As soon as a second threshold (warning stage

U/f >>) has been exceeded, another pickup indication is output and a timer **T U/f >>** starts. A trip command is issued subsequent to the expiration of this timer.

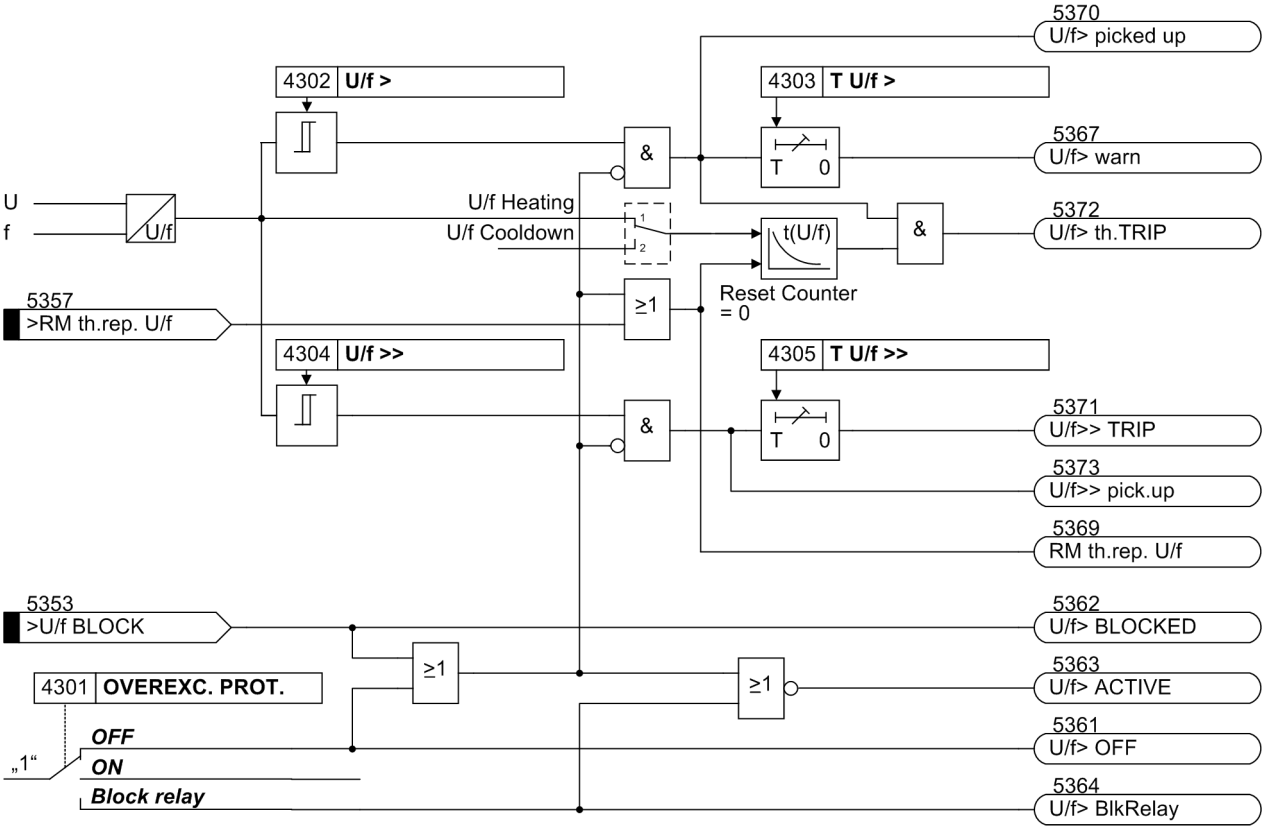

Figure 2-99 Logic diagram of the overexcitation protection (simplified)

The thermal replica is realised by a counter which is incremented in accordance with the value U/f calculated from the measured voltages. A prerequisite is that the U/f value has exceeded the pickup value **U/f >** of the warning stage. If the counter reaches a level corresponding with the set trip characteristic, the trip command is given.

The trip signal is cancelled as soon as the value falls below the pickup threshold and the counter is decremented according to the set cooldown rate.

The thermal characteristic is specified by 8 value pairs concerning the U/f value (referred to nominal value) and the associated trip time T. In most cases, the default characteristic for standard transformers provides for sufficient protection. If this characteristic does not correspond to the actual thermal behaviour of the object to be protected, any desired characteristic can be implemented by entering user-specific trip times for the specified U/f overexcitation values. Intermediate values are determined by a linear interpolation within the device.

The counter can be reset to zero by means of a blocking input or a reset input. The internal upper limit of the thermal replica is 150 % of trip temperature rise.

2.11.2 Setting Notes

General

A precondition for use of the overexcitation protection is that measured voltages are connected to the device and that a 3-phase protected object has been selected during configuration of the protection functions. Additionally, the overexcitation protection can only operate if it has been configured under address143 **OVEREXC. PROT.** =***Enabled***.

In address 4301 **OVEREXC. PROT.**, the overexcitation protection can be switched ***ON*** or ***OFF***. The option ***Block relay*** allows to operate the protection but the trip output relay is blocked.

Definite Time Stages

The limit-value setting at address 4302 **U/f >** is based on the continuously permissible induction value related to the nominal induction (B/B_N) specified by the manufacturer of the object to be protected. This setting determines the pickup of the warning stage as well as the minimum value for the thermal stage (see below).

After the time 4303 address **T U/f >** has expired (approx 10 s) alarm is output.

Strong overexcitation endangers the protected object after short time. The high-set stage 4304 address **U/f >>** should, therefore be only shortly delayed (approx. 1 s) by the time 4305 address**T U/f >>**.

The set times are additional time delays which do not include the inherent operating time (measuring time, drop-out time) of the protection. If you set a time delay to ∞, the associated stage does not trip; nevertheless, a pickup indication is output.

Thermal Stage

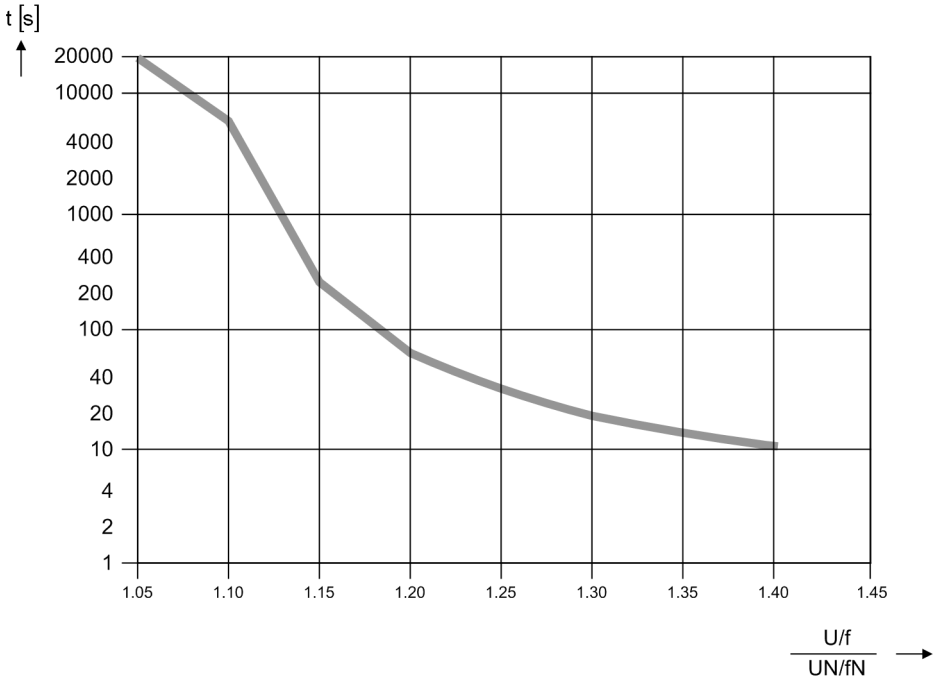

Figure 2-100 Thermal tripping characteristic (with preset values)

The thermal characteristic is intended to simulate the temperature rise of the iron core due to overflux. The heating-up characteristic is approximated by 8 time values for the 8 predefined induction values B/B_{NObj} (reduced U/f). Intermediate values are gained in the device by linear interpolation.

If no instructions of the manufacturer are available, the preset standard characteristic should be used; this corresponds to a standard Siemens transformer (figure 2-100).

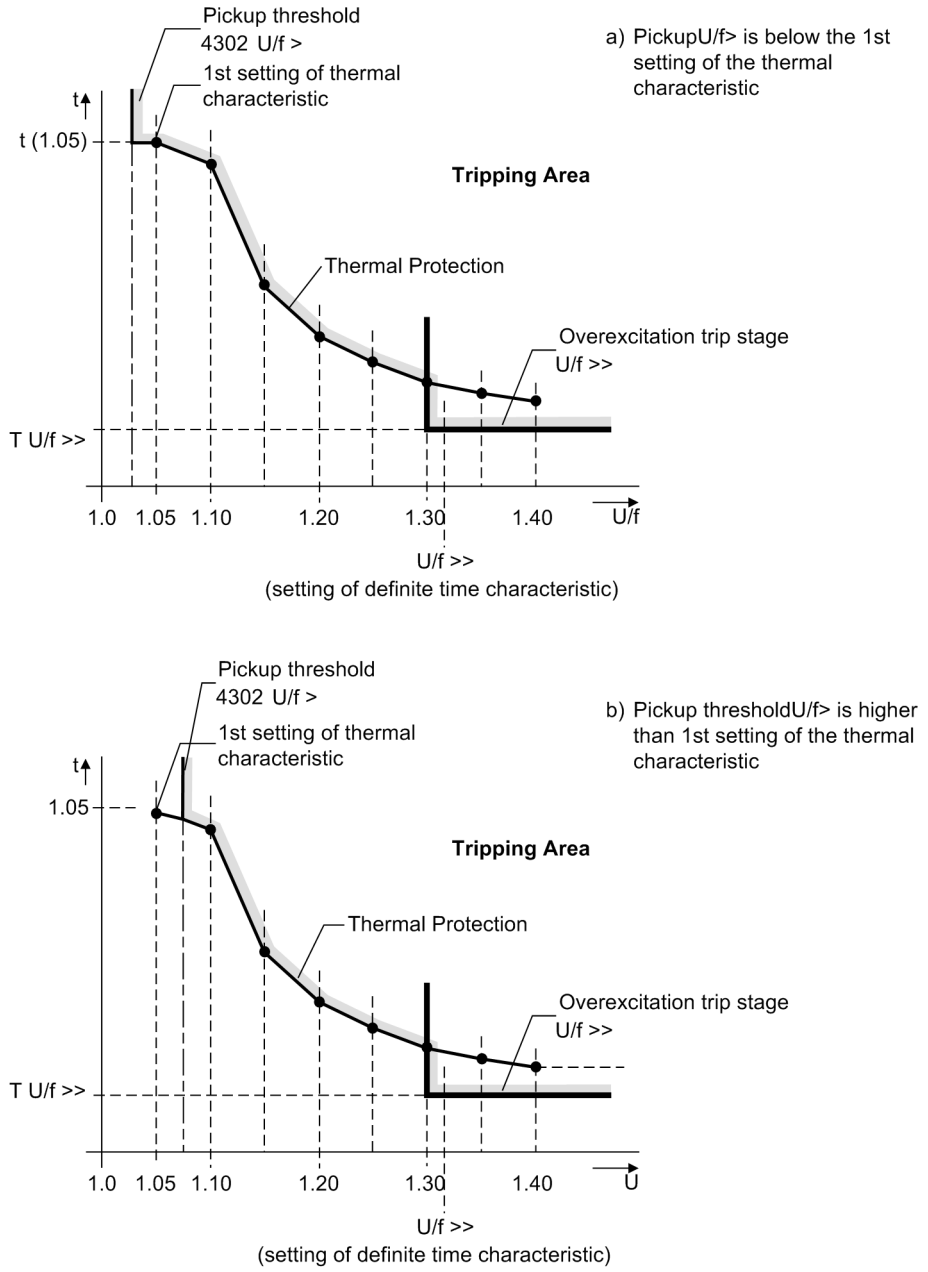

Figure 2-101 Tripping time characteristic of the overexcitation protection

Otherwise, any tripping characteristic can be specified by point-wise entering the delay times for the 8 predefined U/f-values:

Address 4306 t(U/f=1.05)
Address 4307 t(U/f=1.10)
Address 4308 t(U/f=1.15)
Address 4309 t(U/f=1.20)

Address 4310 t(U/f=1.25)
Address 4311 t(U/f=1.30)
Address 4312 t(U/f=1.35)
Address 4313 t(U/f=1.40)

As mentioned above, the thermal characteristic is effective only if the pickup threshold U/f> is exceeded. Figure 2-101 illustrates the behaviour of the protection on the assumption that the setting for the pickup threshold was chosen higher or lower than the first setting value of the thermal characteristic.

Cool-down Time

Tripping by the thermal image is reset at the time of the pickup threshold reset. However, the counter content is counted down to zero with the cooldown time parametrized at address 4314 **T COOL DOWN**. In this context, this parameter is defined as the time required by the thermal replica to cool down from 100 % to 0 %.



Note

All U/f values in the following settings overview are referred to the induction of the protected object under nominal conditions, i.e. U_{NObj}/f_N.

2.11.3 Settings

Addr.	Parameter	Setting Options	Default Setting	Comments
4301	OVEREXC. PROT.	OFF ON Block relay	OFF	Overexcitation Protection (U/f)
4302	U/f >	1.00 .. 1.20	1.10	U/f > Pickup
4303	T U/f >	0.00 .. 60.00 sec; ∞	10.00 sec	T U/f > Time Delay
4304	U/f >>	1.00 .. 1.40	1.40	U/f >> Pickup
4305	T U/f >>	0.00 .. 60.00 sec; ∞	1.00 sec	T U/f >> Time Delay
4306	t(U/f=1.05)	0 .. 20000 sec	20000 sec	U/f = 1.05 Time Delay
4307	t(U/f=1.10)	0 .. 20000 sec	6000 sec	U/f = 1.10 Time Delay
4308	t(U/f=1.15)	0 .. 20000 sec	240 sec	U/f = 1.15 Time Delay
4309	t(U/f=1.20)	0 .. 20000 sec	60 sec	U/f = 1.20 Time Delay
4310	t(U/f=1.25)	0 .. 20000 sec	30 sec	U/f = 1.25 Time Delay
4311	t(U/f=1.30)	0 .. 20000 sec	19 sec	U/f = 1.30 Time Delay
4312	t(U/f=1.35)	0 .. 20000 sec	13 sec	U/f = 1.35 Time Delay
4313	t(U/f=1.40)	0 .. 20000 sec	10 sec	U/f = 1.40 Time Delay
4314	T COOL DOWN	0 .. 20000 sec	3600 sec	Time for cool down

2.11.4 Information List

No.	Information	Type of Information	Comments
5353	>U/f BLOCK	SP	>BLOCK overexcitation protection
5357	>RM th.rep. U/f	SP	>Reset memory of thermal replica U/f
5361	U/f> OFF	OUT	Overexcitation protection is swiched OFF
5362	U/f> BLOCKED	OUT	Overexcitation protection is BLOCKED
5363	U/f> ACTIVE	OUT	Overexcitation protection is ACTIVE
5367	U/f> warn	OUT	Overexc. prot.: U/f warning stage
5369	RM th.rep. U/f	OUT	Reset memory of thermal replica U/f
5370	U/f> picked up	OUT	Overexc. prot.: U/f> picked up
5371	U/f>> TRIP	OUT	Overexc. prot.: TRIP of U/f>> stage
5372	U/f> th.TRIP	OUT	Overexc. prot.: TRIP of th. stage
5373	U/f>> pick.up	OUT	Overexc. prot.: U/f>> picked up
5376	U/f Err No VT	OUT	Overexc. err: No VT assigned
5377	U/f Not avail.	OUT	Overexc. err: Not avail. for this object

2.12 Reverse Power Protection

Reverse power protection is used to protect a turbo-generator unit on failure of energy to the prime mover when the synchronous generator runs as a motor and drives the turbine taking motoring energy from the network. This condition endangers the turbine blades the and must be interrupted within a short time by tripping the network circuit-breaker. For the generator, there is the additional risk that, in case of a malfunctioning residual steam pass (defective stop valves) after the switching off of the circuit breakers, the turbine-generator-unit is speeded up, thus reaching an overspeed. For this reason, the decoupling should only be performed after the detection of active power input into the machine. The reverse power protection can be used as a criteria for the decoupling in the system.

The reverse power protection can only be used for a three-phase protective objects. This understands that the device is connected to a voltage transformer set and that this voltage, together with an assigned corresponding current transformer, allows for a logical calculation of the active power. This is therefore only possible for 7UT613 and 7UT633.

2.12.1 Function Description

Reverse Power Determination

The reverse power supervision in 7UT613/63x calculates the active power from the symmetrical components of the fundamental waves of the voltages and currents.

There are two measurement methods:

- The "precise" measuring procedure is especially suited for reverse power protection on generators, as in this case a very low active power is calculated from a very high apparent power (for small cos φ). The positive sequence systems from voltages and currents are used to obtain a very high accuracy of the last 16 cycles. The evaluation of the positive phase-sequence systems makes the reverse power determination independent of current and voltage asymmetries and corresponds to actual loading of the drive end. By taking the error angles of the voltage and current transformers into account, the active power component is exactly calculated even with very high apparent powers and low cos φ. The angle correction is performed by a correction angle φ_{corr} (see Subsection 2.1.4, "General System data"), which is appropriately determined by the commissioning of the protective device in the system (see Subsection "Installation and Commissioning", "Checking the Voltage Connections and Polarity Check").
- The "fast" measurement also uses the positive-sequence components of currents and voltages that are calculated over a cycle. A short tripping time is hereby achieved. It is therefore well suited in system applications where short tripping times are more desired than high accuracy of real power.

Pickup Seal-In Time

To ensure that frequently occurring short pickups can cause tripping, a selectable prolongation of these pickup signals is provided. Should new fault detection signals appear within this seal-in time the pickup is maintained, so that a delayed tripping can take place.

Delay and Logic

Two delay times are available for the delay of the trip command.

When used as a reverse power protection for generators, bridging a perhaps short power input during synchronisation or during power swings caused by system faults, the trip command is delayed by a selectable time **T-SV-OPEN**. In case of a closed

turbine emergency tripping a short delay **T-SV-CLOSED** is, however, sufficient. The state of the emergency tripping valve must then be given to the device via a binary input "RLS Fast". The delay time **T-SV-OPEN** is still effective as back-up stage.

In other applications only the delay **T-SV-OPEN** is generally needed, as they act independently to the mentioned binary input. Of course you can also use the two-stage protection as needed, in order to - dependent on an external criteria - achieve two different trip delays.

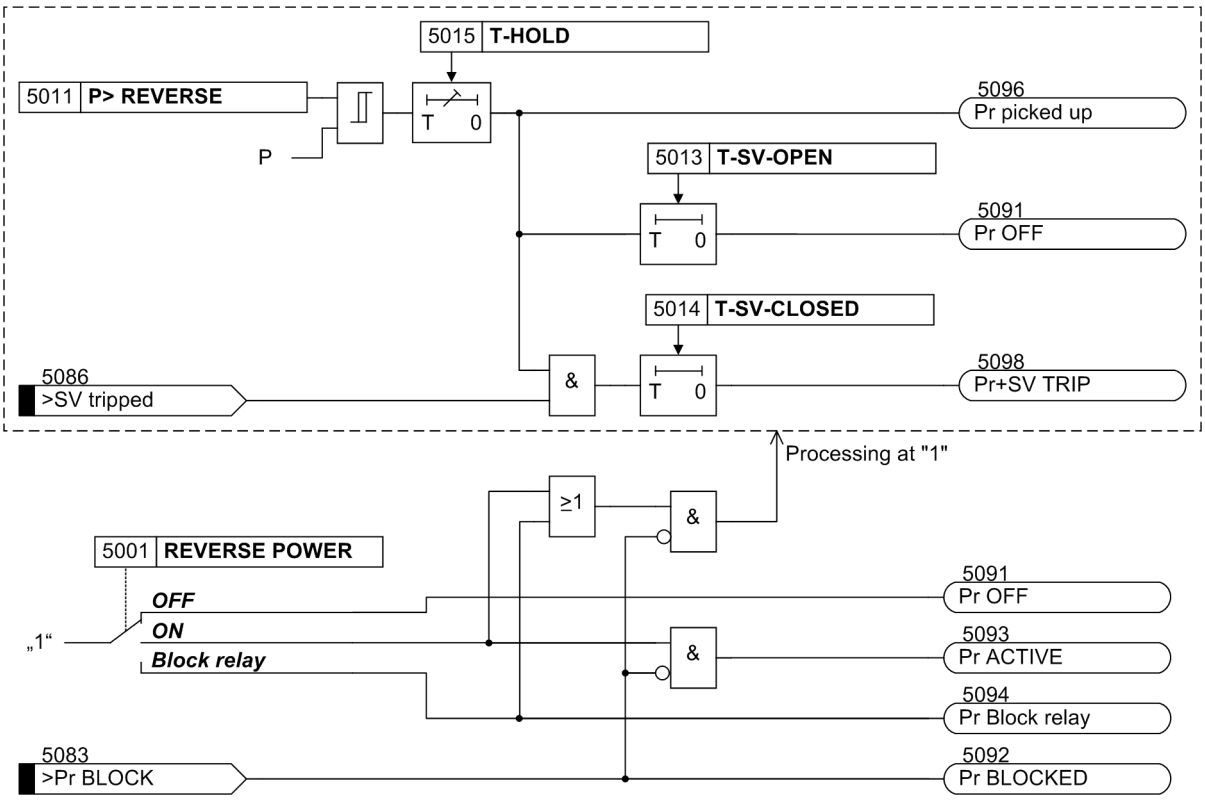

Figure 2-102 Logic diagram of reverse power protection

2.12.2 Setting Notes

General

The application of reverse power protection is only possible in 3-phase protected objects. It can only be assigned to a side of the main protected object or another measuring location. Furthermore, it is a prerequisite that the device is connected to a three-phase voltage transformer set.

The reverse power protection is only effective and accessible if address 150 was set to **REVERSE POWER** ***Enabled*** during configuration of the protection function (section 2.1.3.

Under address 5001 **REVERSE POWER** the reverse power protection can be switched ***ON*** or ***OFF***. The option ***Block relay*** allows to operate the protection but the trip output relay is blocked.

Pickup Value

In case of a reverse power, the turbine set must be disconnected from the system as the turbine operation is not permissible without a certain minimum steam throughout (cooling effect). In case of a gas turbine set, the motor load can also become too heavy for the network.

In case of a turbine generator unit the level of the active power input is mainly determined by the friction losses to be overcome and lies within the following ranges:

Steam turbines:	$P_{Revere}/S_N \approx 1\ \%$ to $3\ \%$
Gas turbines:	$P_{Reverse}/S_N \approx 3\ \%$ to $5\ \%$
Diesel drives:	$P_{Reverse}/S_N > 5\ \%$

It is recommended, however, to measure the reverse power of the turbine generator unit with the protection yourself during primary test (section "Commissioning", "Verification of the Voltage Connections"). As setting value, use approx. half the measured motoring power. The feature to correct angle faults of the current and voltage transformers should be used especially for very large machines with a particularly low motoring energy (see sections 2.1.4 and "Commissioning", "Verification of the Voltage Connections and Directional Check").

If the reverse power protection has been assigned to one side of the machine to be protected, the pickup value of the reverse power can be set as relative value (relevant to machine rated power) under address 5012 **Pr pick-up**. As the reverse power is a negative active power, it is set as a negative value (a positive setting value cannot be set).

However, if the reverse power protection must be set in ampere (secondary) during operation, the reverse power must be recalculated as a secondary value and set under address 5011 **P> REVERSE**. This is the case if the reverse power protection has been assigned to a measuring location and not to a side of the main protected object, thus usually in system applications. The following applies:

$$P_{sec} = P_{prim} \cdot \frac{U_{Nom,\,sec}}{U_{Nom,\,prim}} \cdot \frac{I_{Nom,\,sec}}{I_{Nom,\,prim}}$$

with

P_{sec}	secondary power
U_{Nprim}	primary rated voltage of the voltage transformer (interlinked)
U_{Nsec}	secondary nominal voltage of the voltage transformers (phase-to-phase)
I_{Nprim}	primary rated current of the current transformer
I_{Nsec}	secondary rated current of the current transformer
P_{prim}	primary power

If the primary power is referred to the rated power of the main protected object, it needs to be converted:

$$\left(\frac{P_{obj}}{S_{Nobj}}\right)$$

with

$\left(\frac{P_{obj}}{S_{Nobj}}\right)$ active power referenced to the rated apparent power of the protected object

$S_{N\,Obj}$ Nominal apparent power of protected object

Example:

Generator	5.27 MVA
	6.3 kV
Current transformer	500 A/5 A
Voltage transformer	6300 V/100 V
perm. reverse power	3 % = 0.03

In case of setting related to address 5012

Pr pick-up = - 0,03

In case of setting in Watt secondary address 5011

$$\text{Pr pick-up} = \frac{100\ \text{V}}{20000\ \text{V}} \cdot \frac{5\ \text{A}}{500\ \text{A}} \cdot 0.10 \cdot 16\ \text{MVA} = 80\ \text{W}$$

Pickup Seal-in Time

Intermitting pickups are delayed to the set minimum time by means of the pickup seal-in time under address 5015 **T-HOLD**. Usually, these are not required and set to 0.00 sec. This parameter can only be set with DIGSI at **Additional Settings**. If a trip is desired in case of intermitting reverse power, the maximum time interval that may pass between two pickup impulses must be set here, if it is supposed to be interpreted as a continuous pickup.

Delay Time

The following applies to generator applications: If reverse power without emergency tripping is used, a corresponding time delay must be implemented to bridge any short reverse power states after synchronisation or power swings subsequent to system faults (e.g. 3-pole short circuit). Usually, a delay time 5013 **T-SV-OPEN** of approx. 10.00 sec is set.

In case of faults causing an emergency tripping, the reverse power protection performs a short-time delayed switchoff subsequent to the emergency tripping via an oil-pressure switch or a position switch at the emergency trip valve. Before tripping, it must be ensured that the reverse power is only caused by the missing drive power at the turbine side. A time delay is necessary to bridge the active power swing in case of sudden valve closing, until a steady state active power value is achieved. A time delay 5014 **T-SV-CLOSED** of about 1 to 3 s is sufficient for this purpose, whereas a time delay of about 0.5 s is recommended for gas turbine sets. The set times are additional delay times not including the operating times (measuring time, dropout time) of the protective function. Please note that averaging over 16 periods is executed during "precise" measuring procedures; the operating time is thus respectively higher. This is recommended when used as reverse power protection for generators, this is recommended (default setting address 5016 **Type of meas.** = ***accurate***).

In system applications the delay time depends on the type of application and should overlap with the awaited grading times. The time is important **T-SV-OPEN** (address 5013). The time **T-SV-CLOSED** (address 5014) is usually not required in these cases and set to ∞. As high precision of the active power measurement is usually not required here, address 5016 **Type of meas.** = ***fast*** can be set, thus enabling also

short tripping times. This parameter can only be altered in DIGSI at **Additional Settings**.

If a delay time is set to ∞, not trip is caused by this time, the pickup by reverse power is however indicated.

2.12.3 Settings

Addresses which have an appended "A" can only be changed with DIGSI, under Additional Settings.

The table indicates region-specific presettings. Column C (configuration) indicates the corresponding secondary nominal current of the current transformer.

Addr.	Parameter	C	Setting Options	Default Setting	Comments
5001	REVERSE POWER		OFF ON Block relay	OFF	Reverse Power Protection
5011	P> REVERSE	1A	-3000.0 .. -1.7 W	-8.7 W	P> Reverse Pickup
		5A	-15000.0 .. -8.5 W	-43.5 W	
5012	Pr pick-up		-17.00 .. -0.01 P/SnS	-0.05 P/SnS	Pick-up threshold reverse power
5013	T-SV-OPEN		0.00 .. 60.00 sec; ∞	10.00 sec	Time Delay Long (without Stop Valve)
5014	T-SV-CLOSED		0.00 .. 60.00 sec; ∞	1.00 sec	Time Delay Short (with Stop Valve)
5015A	T-HOLD		0.00 .. 60.00 sec; ∞	0.00 sec	Pickup Holding Time
5016A	Type of meas.		accurate fast	accurate	Type of measurement

2.12.4 Information List

No.	Information	Type of Information	Comments
5083	>Pr BLOCK	SP	>BLOCK reverse power protection
5086	>SV tripped	SP	>Stop valve tripped
5091	Pr OFF	OUT	Reverse power prot. is switched OFF
5092	Pr BLOCKED	OUT	Reverse power protection is BLOCKED
5093	Pr ACTIVE	OUT	Reverse power protection is ACTIVE
5096	Pr picked up	OUT	Reverse power: picked up
5097	Pr TRIP	OUT	Reverse power: TRIP
5098	Pr+SV TRIP	OUT	Reverse power: TRIP with stop valve
5099	Pr CT Fact ><	OUT	Reverse pwr err: CT fact too large/small
5100	Pr VT error	OUT	Reverse power err: Allocation of VT
5101	Pr obj. error	OUT	Reverse pwr err:Not avail. for this obj.

2.13 Forward Power Supervision

The forward power supervision monitors wether the active power undershoots one set value or overshoots a separate second value. Each of these functions can initiate different control functions.

When, for example, with generators operating in parallel, the active power output of one machine becomes so small that other generators could take over this power, then it is often appropriate to shut down the lightly loaded machine. The criteria here is that the forward power supplied into the network falls **below** a certain value.

In some applications it may be useful to give a control command when the issuing real power exceeds a specific value. If only one of two parallel connected transformers is active, the second one can be activated, as soon as the transferred power **exceeds** a preset ratio.

When a fault in a utility network is not cleared within critical time, the utility network should be split or for example, an industrial network with internal supply decoupled from it. As criteria for decoupling, in addition to power flow direction, are undervoltage, overcurrent and/or frequency. As a result, the 7UT6 can also be used for network decoupling.

The forward power supervision can only be used for three-phase protective objects. This understands that the device is connected to a voltage transformer set and that this voltage, together with an assigned corresponding current transformer, allow for a logical calculation of the active power. This is therefore only possible for 7UT613 and 7UT633.

When the circuit breakers are deactivated, the P< stage should be blocked via external signals.

2.13.1 Function Description

Determining Real Power

The forward power supervision in 7UT6 calculates the active power from the symmetrical components of the fundamental waves of the voltages and currents.

There are two measurement methods:

- The "exact" measurement method averages the active power via the last 16 cycles of the measured quantities. The evaluation of the positive phase-sequence systems makes the active power definition independent of current and voltage asymmetries. If an exact derivation of real power at high apparent powers (low cos φ) is desired, it will be necessary to consider the angle error of voltage and current transformers. The angle correction is performed by a correction angle φ_{corr} (see Subsection 2.1.4).
- The "fast" measurement method calculates the positive-sequence components of currents and voltage over a cycle. A short tripping time is hereby achieved. It is therefore well suited in system applications where short tripping times are more desired than high accuracy, e.g. used for purposes of network decoupling.

Time Delay, Logic

The P<-stage as well as the P>-stage each have a time delay. The respective command is issued after end of the resulting delay and each can trigger a control activity.

Every stage can be blocked separately via binary inputs; a another binary input blocks the entire forward power supervision. The P<-stage is blocked internally when the

broken wire or voltage failure is recognised or voltage transformer protection breaker failure (via the respective binary input) is indicated (see also Subsection "Technical Data").

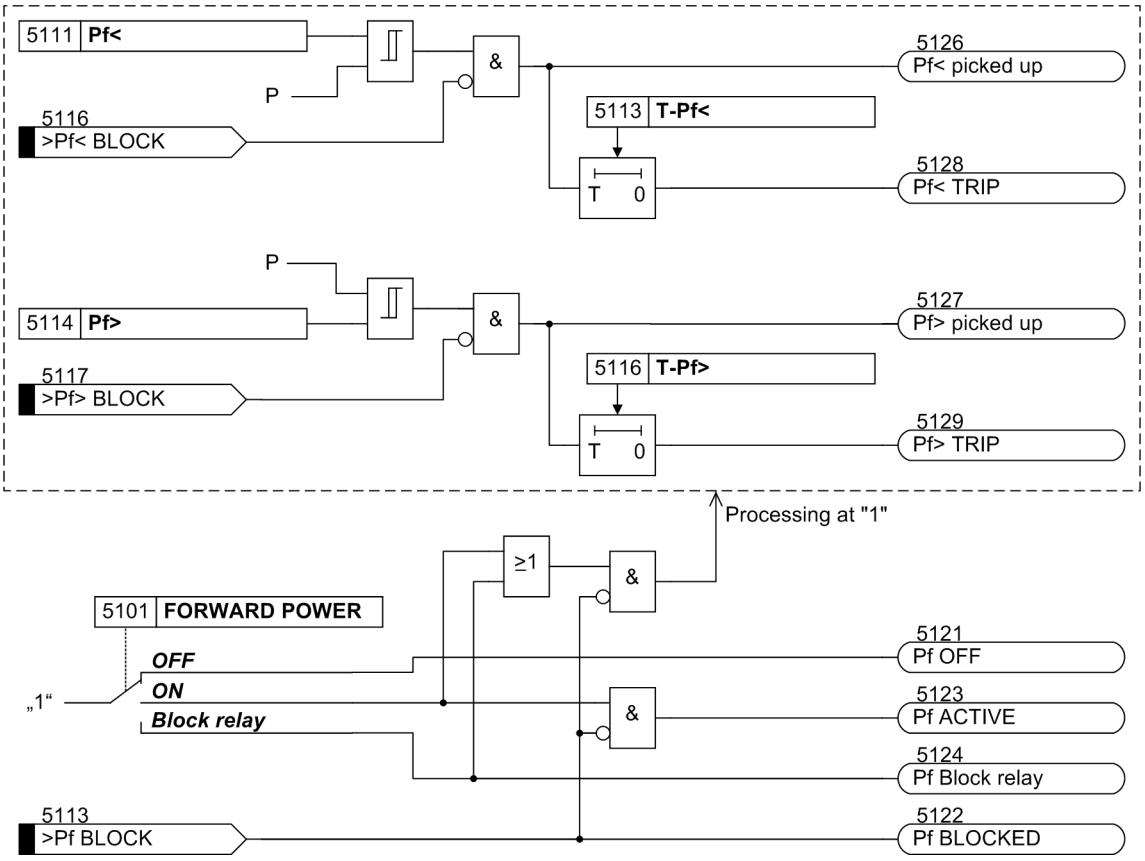

Figure 2-103 Logic diagram of the forward active power supervision

2.13.2 Setting Notes

General

The application of forward power monitoring is only possible in 3-phase protected objects. It can only be assigned to a side of the main protected object or another measuring location. Furthermore, it is a prerequisite that the device is connected to a three-phase voltage transformer set, that permits a sensible calculation of the active power with the respective current transformer connection.

The forward power monitoring can only be effective and is only accessible if it has been set during configuration under address 151 **FORWARD POWER** = ***Enabled*** (section 2.1.3).

Under address 5101 **FORWARD POWER** the forward power monitoring can be switched ***ON*** or ***OFF***. Furthermore, the command can be blocked during enabled monitoring function (***Block relay***).

Pickup Values

For undershooting of a preset active power and the exceeding of another preset active power, one pickup value each must be set.

If the forward power monitoring has been assigned to a side of the protected object, the pickup value can be set directly as reference value (with reference to the nominal

power of the respective side), thus under address 5112 **P< fwd** for undershooting of active power and under address 5115 **P> fwd** for exceeding of active power.

If, however, the forward power monitoring must be set in amps secondary, the active power must be converted to a secondary value. The settings can then be effected under address 5111 **Pf<** for undershooting of active power and under address 5114 **Pf>** for exceeding of active power.

The latter is always the case if the forward power monitoring has been assigned to a measuring location, and not a side of the main protected object.

The following applies to the conversion:

$$P_{sec} = P_{prim} \cdot \frac{U_{Nom,\,sec}}{U_{Nom,\,prim}} \cdot \frac{I_{Nom,\,sec}}{I_{Nom,\,prim}}$$

where

P_{sec}	secondary power
U_{Nprim}	primary rated voltage of the voltage transformer (interlinked)
U_{Nsec}	secondary rated current of the voltage transformer (interlinked)
I_{Nprim}	primary rated current of the current transformer
I_{Nsec}	secondary rated current of the current transformer
P_{prim}	primary power

Example:

Transformer	16 MVA
(winding)	20 kV
Current transformer	500 A/5 A
Voltage transformer	20 kV/100 V
Switching off during P<	10 % = 0.1

Connecting a parallel transformer

Parallel transformer during P> 90 % = 0.9

In case of reference setting (with reference to the sides = winding data)

Address5112 **P< fwd** = 0.10

Address 5115 **P> fwd** = 0.90

When setting in watt secondary, this has the following effect

$$P< = \frac{100\ V}{20000\ V} \cdot \frac{5\ A}{500\ A} \cdot 0.10 \cdot 16\ MVA = 80\ W$$

$$P> = \frac{100\ V}{20000\ V} \cdot \frac{5\ A}{500\ A} \cdot 0.9 \cdot 16\ MVA = 720\ W$$

the setting values

Address 5111 **Pf<** = 80 W

Address 5114 **Pf>** = 720 W

Delay Times

The setting of the delay times depend on the application. In the example of transformer switchover or also in case of generator switchover, a long delay (up to one minute = 60 s) will be set so that short-term load fluctuations do not result in repeated switchover. In case of network splitting, short delays are permitted, which, amongst others, must conform with the time grading of the short-circuit protective relays.

For undershooting of active power, address 5113 **T-Pf<** applies and for the exceeding of active power address 5116 **T-Pf>** applies.

the set times are additional time delays that do not include the operating times (measuring time, dropout time) of the monitoring function. Please note that averaging over 16 periods is executed during "precise" measuring procedures; the operating time is thus respectively higher. If a delay time is set to ∞, this does not result in a trip, however, the pickup will be indicated.

Measuring Procedure

The measuring procedure can be set under address 5117 **MEAS. METHOD**. This parameter can only be set with DIGSI at **Additional Settings**. The option **MEAS. METHOD** = ***accurate*** is mainly required if also small active power from great apparent power must be calculated precisely, e.g. in generator range or in protected objects with high reactive power. Please also note that the operating time in this option is higher due to averaging over 16 periods. A precise measurement requires that the angle errors of the current and voltage transformers are compensated by means of a respective setting of the fault angle in address 803 **CORRECT. U Ang** (see section 2.1.4). Short trip times are possible with this option **MEAS. METHOD** = ***fast*** as the power is determined over one period only.

2.13.3 Settings

Addresses which have an appended "A" can only be changed with DIGSI, under Additional Settings.

The table indicates region-specific presettings. Column C (configuration) indicates the corresponding secondary nominal current of the current transformer.

Addr.	Parameter	C	Setting Options	Default Setting	Comments
5101	FORWARD POWER		OFF ON Block relay	OFF	Forward Power Supervision
5111	Pf<	1A	1.7 .. 3000.0 W	17.3 W	P-forw.< Supervision Pickup
		5A	8.5 .. 15000.0 W	86.5 W	
5112	P< fwd		0.01 .. 17.00 P/SnS	0.10 P/SnS	Pick-up threshold P<
5113	T-Pf<		0.00 .. 60.00 sec; ∞	10.00 sec	T-P-forw.< Time Delay
5114	Pf>	1A	1.7 .. 3000.0 W	164.5 W	P-forw.> Supervision Pickup
		5A	8.5 .. 15000.0 W	822.5 W	
5115	P> fwd		0.01 .. 17.00 P/SnS	0.95 P/SnS	Pick-up threshold P>
5116	T-Pf>		0.00 .. 60.00 sec; ∞	10.00 sec	T-P-forw.> Time Delay
5117A	MEAS. METHOD		accurate fast	accurate	Method of Operation

2.13.4 Information List

No.	Information	Type of Information	Comments
5113	>Pf BLOCK	SP	>BLOCK forward power supervision
5116	>Pf< BLOCK	SP	>BLOCK forw. power superv. Pf< stage
5117	>Pf> BLOCK	SP	>BLOCK forw. power superv. Pf> stage
5121	Pf OFF	OUT	Forward power supervis. is switched OFF
5122	Pf BLOCKED	OUT	Forward power supervision is BLOCKED
5123	Pf ACTIVE	OUT	Forward power supervision is ACTIVE
5126	Pf< picked up	OUT	Forward power: Pf< stage picked up
5127	Pf> picked up	OUT	Forward power: Pf> stage picked up
5128	Pf< TRIP	OUT	Forward power: Pf< stage TRIP
5129	Pf> TRIP	OUT	Forward power: Pf> stage TRIP
5130	Pf> CT fact ><	OUT	Forward pwr err: CT fact too large/small
5131	Pf> VT error	OUT	Forward power error: VT assignment
5132	Pf> Object err	OUT	Forward pwr err:Not avail. for this obj.

2.14 Undervoltage Protection

Undervoltage protection detects voltage dips in electrical machines and avoids inadmissible operating states and possible loss of stability in electrical devices. The stability and permissible torque thresholds of an induction machine is affected by undervoltage. In network coupling this can be used as a criteria for the network decoupling.

The undervoltage protection can only be used for three-phase protective objects. This implies that the device is connected to a voltage transformer. This is therefore only possible for 7UT613 and 7UT633. As the undervoltage protection only gets its measuring information from the connected voltage measurement, it leaves the assignment of currents to one side or a measuring location for the function without coating. Setting causes the same differences as in other protection functions. If the undervoltage protection is assigned to one side of the main protective object or the three-phase busbar, the voltage limits in related values (U/UN) have to be set. The values are set to secondary in volts when assigned to a measuring location.

2.14.1 Function Description

The undervoltage protection in 7UT613/63x uses the positive sequence system from the fundamental harmonic of the connected phase-to-earth voltages. Compared to three single-phase measuring systems, the detection of the positive phase-sequence system is not influenced by 2-pole faults or earth faults.

Overvoltage protection includes two stages. A pickup is signalled as soon as selectable voltage thresholds are undershot. A trip signal is transmitted if a voltage pickup exists for a selectable time.

If a fuse failure (failure of the measuring voltage) is detected, or a voltage transformer protection breaker trip (via a correspondingly marshalled binary input) is indicated (refer also to Subsection 2.19.1), both stages are internally blocked, in order to avoid malfunction of the protection in the event of secondary voltage failure. Each stage can be blocked individually and/or for both stages can be blocked, via binary inputs.

Particular attention must be paid to the status of the interrupted system during undervoltage protection. As protective objects have no primary or measurement voltage, the pickup conditions are therefore always fulfilled. The same can apply after a tripping of the undervoltage protection or another protection function. The undervoltage protection should therefore (according to suitable criteria) be completely blocked externally - e.g. dependent on circuit breaker - via an appropriate binary input.

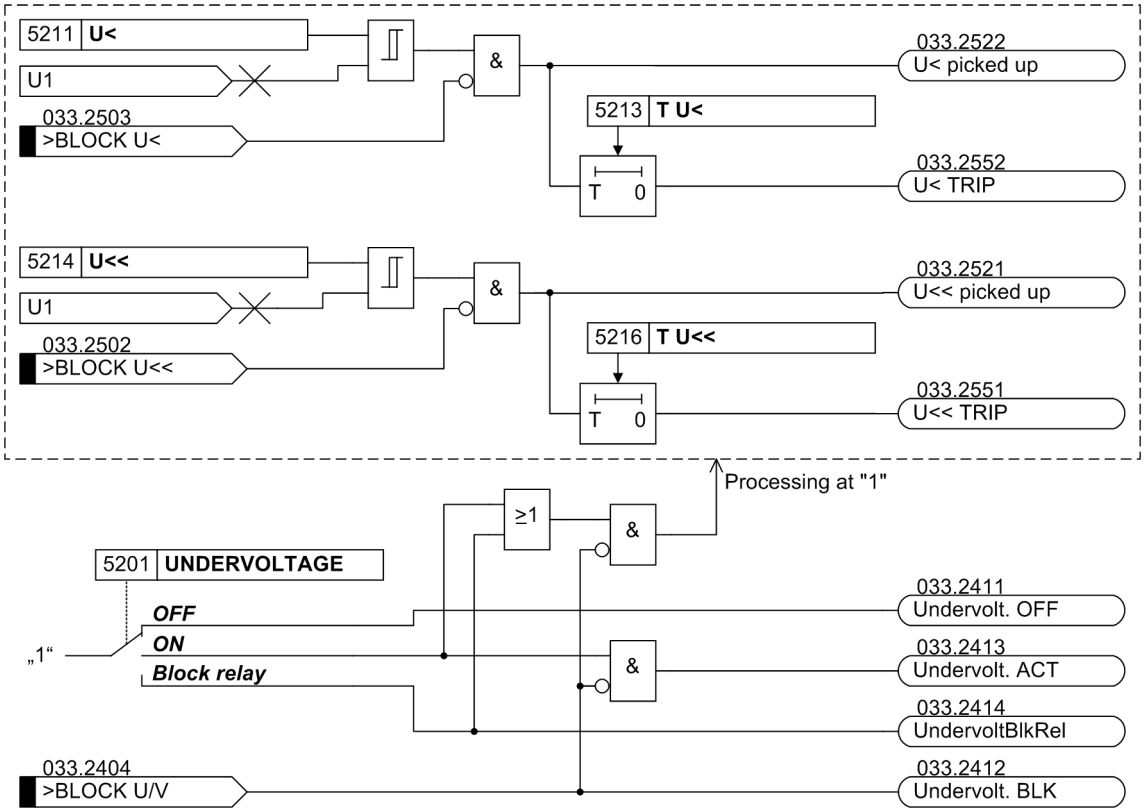

Figure 2-104 Logic diagram of the undervoltage protection

2.14.2 Setting Notes

General

The application of undervoltage protection is only possible in 3-phase protected objects. Furthermore, it is a prerequisite that the device is connected to a three-phase voltage transformer set.

Undervoltage protection is only effective and accessible if address 152 was set to **UNDERVOLTAGE** ***Enabled*** during configuration of the protection function (section 2.1.3).

Under address 5201 **UNDERVOLTAGE** the undervoltage protection ***ON*** or ***OFF*** can be set. Additionally, the command can be blocked if the protection function is enabled (***Block relay***).

Pickup Values, Times

The undervoltage protection consists of two phases. The equivalent of the phase-phase voltage is detected, therefore $\sqrt{3} \cdot U_1$. The setting is thus effected in interlinked values.

The U< stage is set slightly below the minimum operational expected voltage under address 5212 **U<**, if the reference values are relevant, under address 5211 **U<** when setting in volts. This setting method depends on whether the voltage transformer set has been assigned to one side of the main protected object or to any measuring location. Normally, 75 % to 80 % of the nominal voltage is recommended; i.e. 0.75 to 0.80 for reference values or 75 V to 80 V for $U_{N\,sec}$ = 100 V (adjusted accordingly in case of different nominal voltage).

The respective delay time **T U<** (address 5213) is supposed to bridge the permissible short-term voltage dips during continuous undervoltage, which may lead to an unstable operation, however, it is supposed to be switched off within a few seconds.

For the U<< stage, a lower pickup threshold with a short delay should be set so that in case of heavy voltage dips a quick trip can occur, e.g. 65 % of the nominal voltage with 0.5 s delay.

If the undervoltage protection is assigned to one side of the main protected object or the three-phase busbar, the pickup value must be set as reference value under address 5215 **U<<**, e.g. 0.65. When assigned to a measuring location, the value of phase-phase voltage must be set under address 5214 **U<<** in Volt, e.g. 71.5. V at $U_{N\ sec}$ = 110 V (65 % of 110 V).

The set times are additional time delays that do not include the operating time (measuring time, dropout time) of the protection function. If a delay time is set to ∞, this does not result in a trip, however, the pickup will be indicated.

Dropout Ratio

The drop-out ratio can be adjusted to the operating conditions at address 5217 **DOUT RATIO**. This parameter can only be altered in DIGSI at **Additional Settings**.

2.14.3 Settings

Addresses which have an appended "A" can only be changed with DIGSI, under Additional Settings.

Addr.	Parameter	Setting Options	Default Setting	Comments
5201	UNDERVOLTAGE	OFF ON Block relay	OFF	Undervoltage Protection
5211	U<	10.0 .. 125.0 V	75.0 V	U< Pickup
5212	U<	0.10 .. 1.25 U/UnS	0.75 U/UnS	Pick-up voltage U<
5213	T U<	0.00 .. 60.00 sec; ∞	3.00 sec	T U< Time Delay
5214	U<<	10.0 .. 125.0 V	65.0 V	U<< Pickup
5215	U<<	0.10 .. 1.25 U/UnS	0.65 U/UnS	Pick-up voltage U<<
5216	T U<<	0.00 .. 60.00 sec; ∞	0.50 sec	T U<< Time Delay
5217A	DOUT RATIO	1.01 .. 1.20	1.05	U<, U<< Drop Out Ratio

2.14.4 Information List

No.	Information	Type of Information	Comments
033.2404	>BLOCK U/V	SP	>BLOCK undervoltage protection
033.2411	Undervolt. OFF	OUT	Undervoltage protection is switched OFF
033.2412	Undervolt. BLK	OUT	Undervoltage protection is BLOCKED
033.2413	Undervolt. ACT	OUT	Undervoltage protection is ACTIVE
033.2491	U< err. Obj.	OUT	Undervoltage: Not avail. for this obj.
033.2492	U< err. VT	OUT	Undervoltage: error assigned VT

No.	Information	Type of Information	Comments
033.2502	>BLOCK U<<	SP	>BLOCK undervoltage protection U<<
033.2503	>BLOCK U<	SP	>BLOCK undervoltage protection U<
033.2521	U<< picked up	OUT	Undervoltage U<< picked up
033.2522	U< picked up	OUT	Undervoltage U< picked up
033.2551	U<< TRIP	OUT	Undervoltage U<< TRIP
033.2552	U< TRIP	OUT	Undervoltage U< TRIP

2.15 Overvoltage Protection

The overvoltage protection has the task of preventing from insulation problems by protecting electrical equipment against inadmissible abnormally high voltage levels.

High voltages occur in the power station sector, e.g. caused by incorrect manual operation of the excitation system, faulty operation of the automatic voltage regulator, (full) load shedding of a generator, separation of the generator from the system or during island operation.

High voltages can also occur in the network by faulty operation of a voltage regulator on the transformer or on longer weak load.

The overvoltage protection can only be used for three-phase protective objects. This implies that the device is connected to a voltage transformer. This is therefore only possible for 7UT613 and 7UT633. As the overvoltage protection only gets its measuring information from the connected voltage measurement, it leaves the assignment of currents to one side or a measuring location for the function without coating. Setting causes the same differences as in other protection functions. If the overvoltage protection is assigned to one side of the main protective object or the three-phase busbar, the voltage limits in related values (U/UN) have to be set. The values are set to secondary in volts when assigned to a measuring location.

2.15.1 Function Description

The overvoltage protection assesses the largest of the three phase-to-phase voltages or the highest of the three phase-to-earth voltages (adjustable).

Overvoltage protection includes two stages. In case of a high overvoltage, the switchoff is performed with a short-time delay, whereas in case of lower overvoltages, the switchoff is performed with a longer time delay. Voltage limit values and delay times can be set individually for both stages.

Furthermore, the entire overvoltage protection can be blocked vie a binary input.

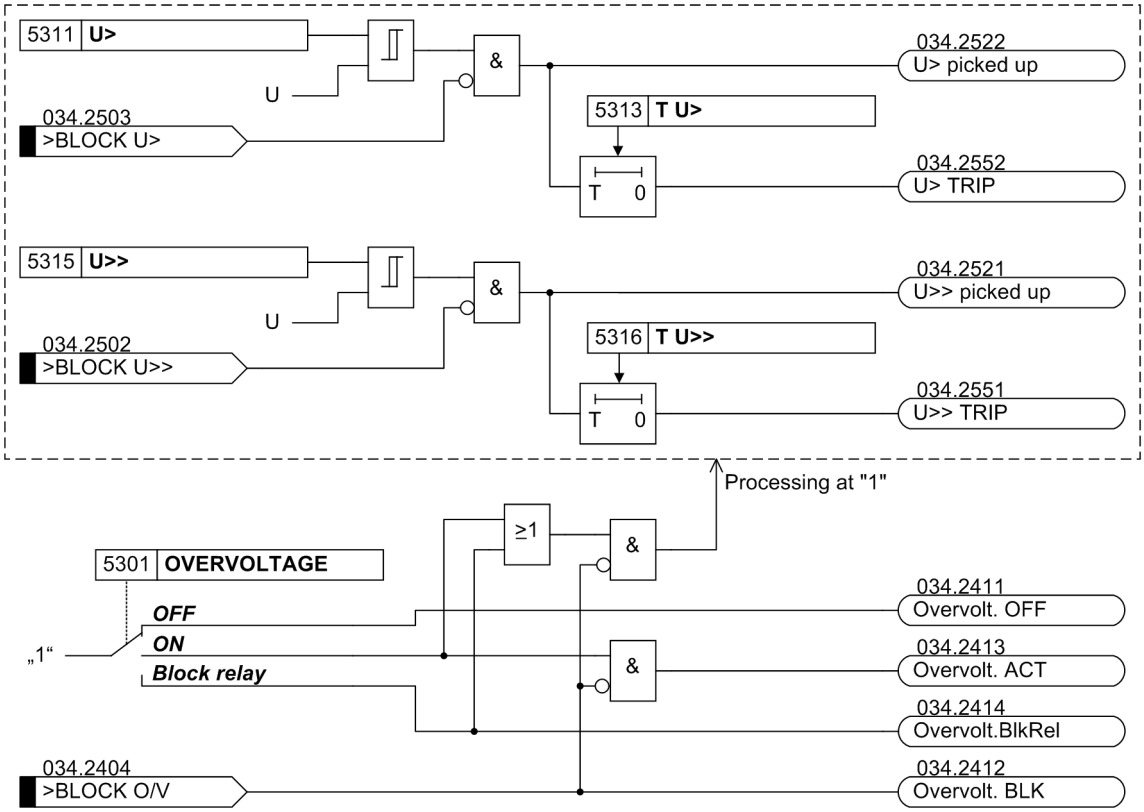

Figure 2-105 Logic diagram of the overvoltage protection

2.15.2 Setting Notes

General

The application of overvoltage protection is only possible in 3-phase protected objects. Furthermore, it is a prerequisite that the device is connected to a three-phase voltage transformer set.

Overvoltage protection is only effective and accessible if address 153 was set to **OVERVOLTAGE** ***Enabled*** during configuration of the protection function (section 2.1.3).

Under address 5301 **OVERVOLTAGE** the overvoltage protection ***ON*** or ***OFF*** can be set. Furthermore, the command can be blocked if the protective function is enabled (***Block relay***).

Pickup Values, Times

Address 5318A **VALUES** serves to specify the measured quantities used by the protection feature. Setting ***U-ph-ph*** evaluates the phase-phase voltages. This is not influenced by displacement voltages that occur during ground connections or earth faults at a certain distance from the grounding point. The setting ***U-ph-e*** of the phase-earth voltage reflects the actual insulation damage against earth and can also be used in an earthed starpoint. This parameter can only be set with DIGSI at **Additional Settings**. Please note that the setting values for the voltages always refer to the phase-phase voltages, even though the measured values phase-earth have been selected.

The settings of the voltage threshold and the timer values depend on the type of application. Stage U> records stationary overvoltages. It is set to approx. 5 % above the maximum stationary operating voltage that is expected in operation. If the overvoltage protection is assigned to one side of the main protected object or the three-phase

busbar, the pickup value must be set as reference value under address 5312 **U>**, e.g. 1.20. When assigned to a measuring location, the value of phase-phase voltage must be set under address 5311 **U>** in Volt , e.g. 132. V at $U_{N\ sec}$ = 110 V (120 % of 110 V).

The corresponding delay time **T U>** (address 5313) should amount to a few seconds so that short-term overvoltages do not result in a trip.

The U>> stage is provided for high overvoltages of short duration. Here, an correspondingly high pickup value is set, e.g. 1.3 to 1.5 times the rated voltage. If the overvoltage protection is assigned to one side of the main protected object or the three-phase busbar, the pickup value must be set as reference value under address 5315 **U>>**, e.g. 1.30. When assigned to a measuring location, the value of phase-phase voltage must be set under address 5314 **U>>** in Volt , e.g. 130. V at $U_{N\ sec}$ = 100 V.

For the delay **T U>>** (address 5316) 0.1 s to 0.5 s are sufficient.

In generators or transformers with voltage regulator, the settings also depend on the speed with which the voltage regulator regulates voltage variations. The protection must not intervene in the regulation process of the faultlessly functioning voltage regulator. The two-stage characteristic must therefore always be above the voltage time characteristic of the regulation procedure.

All setting times are additional time delays which do not include the operating times (measuring time, dropout time) of the protective function. If a delay time is set to ∞, this does not result in a trip, however, the pickup is indicated.

Dropout Ratio

The drop-out ratio can be adjusted to the operating conditions at address 5317 **DOUT RATIO**. This parameter can only be altered in DIGSI at **Additional Settings**.

2.15.3 Settings

Addresses which have an appended "A" can only be changed with DIGSI, under Additional Settings.

Addr.	Parameter	Setting Options	Default Setting	Comments
5301	OVERVOLTAGE	OFF ON Block relay	OFF	Overvoltage Protection
5311	U>	30.0 .. 170.0 V	115.0 V	U> Pickup
5312	U>	0.30 .. 1.70 U/UnS	1.15 U/UnS	Pick-up voltage U>
5313	T U>	0.00 .. 60.00 sec; ∞	3.00 sec	T U> Time Delay
5314	U>>	30.0 .. 170.0 V	130.0 V	U>> Pickup
5315	U>>	0.30 .. 1.70 U/UnS	1.30 U/UnS	Pick-up voltage U>>
5316	T U>>	0.00 .. 60.00 sec; ∞	0.50 sec	T U>> Time Delay
5317A	DOUT RATIO	0.90 .. 0.99	0.95	U>, U>> Drop Out Ratio
5318A	VALUES	U-ph-ph U-ph-e	U-ph-ph	Measurement Values

2.15.4 Information List

No.	Information	Type of Information	Comments
034.2404	>BLOCK O/V	SP	>BLOCK overvoltage protection
034.2411	Overvolt. OFF	OUT	Overvoltage protection is switched OFF
034.2412	Overvolt. BLK	OUT	Overvoltage protection is BLOCKED
034.2413	Overvolt. ACT	OUT	Overvoltage protection is ACTIVE
034.2491	U> err. Obj.	OUT	Overvoltage: Not avail. for this obj.
034.2492	U> err. VT	OUT	Overvoltage: error VT assignment
034.2502	>BLOCK U>>	SP	>BLOCK overvoltage protection U>>
034.2503	>BLOCK U>	SP	>BLOCK overvoltage protection U>
034.2521	U>> picked up	OUT	Overvoltage U>> picked up
034.2522	U> picked up	OUT	Overvoltage U> picked up
034.2551	U>> TRIP	OUT	Overvoltage U>> TRIP
034.2552	U> TRIP	OUT	Overvoltage U> TRIP

2.16 Frequency Protection

The frequency protection function detects abnormally high and low frequencies. If the network frequency lies outside the admissible range, appropriate actions are initiated. For generators, e.g. the machine is separated from the network. Network decoupling or load shedding can be initiated in networks.

A frequency decrease occurs when the system experiences an increase in real power demand or sub-networks that cannot (or not fast enough) be compensated by additional performance generation. Real power demand has to be decreased by load shedding. A faulty frequency, or speed regulation, can also be the cause in the power station sector. Frequency decrease protection is also applied for generators which operate (temporarily) to an island network. This is due to the fact that the reverse power protection cannot operate in case of a drive power failure. The generator can be disconnected from the power system using the frequency decrease protection.

An increase in system frequency occurs when large blocks of load are removed from the system, or again when a malfunction occurs with a generator governor or AGC system. For rotating machines this increased speed means an increased mechanical loading. There is also a risk of self-excitation for generators feeding long lines under no-load conditions.

Frequency protection consists of four frequency elements. Each stage is independent and can initiate different control functions. Three frequency stages are designed for decreased frequency detection (f<, f<<, f<<<), the fourth is an overfrequency stage (f>).

It can also be used for three-phase protective objects. This implies that the device is connected to a voltage transformer. This is therefore only possible for 7UT613 and 7UT633. As the frequency protection only gets its measuring information from the connected voltage measurement, it leaves the assignment of currents to one side or a measuring location for the function without coating. For the setting of the minimum voltage for the frequency measurement: If the line protection for the frequency protection is assigned to a specific side of the protective object or to the three-phase busbar, the voltage threshold is to be set as relative value (U/UN). The value is set to secondary in volts when assigned to a measuring location.

2.16.1 Function Description

The frequency protection in 7UT613/63x uses the positive sequence system from the fundamental harmonic of the connected phase-to-earth voltages. Missing phase voltages or phase-to-phase voltages have no negative affect, as long as the positive sequence system of the voltages is available in sufficient magnitude. If the measurement voltage drops below a settable value **U MIN**, frequency protection is disabled because precise frequency values can no longer be calculated from the signal.

The frequency protection cannot work if voltage or frequency are outside the working range of the frequency protection (see Technical Data). If a frequency stage picks up frequencies at >66 Hz (or >22 Hz at 16,7 Hz nominal frequency), the pickup is maintained. If the frequency increases and exceeds the operational range, or if the positive phase-sequence voltage of 8.6 V as phase-phase voltage or 5 V as non-interlinked voltage is undershot, the pickup is maintained and a trip on overfrequency is thus enabled.

Maintaining the pickup is ended if the frequency measurement reads again frequencies <66 Hz (or <22 Hz) or the frequency protection is blocked via the indication >FQS. Each frequency stage has a set delay time.

Each of the four frequency elements can be blocked individually by binary inputs. The entire frequency protection can be blocked via a binary input. A corresponding command is signalled after the delay time.

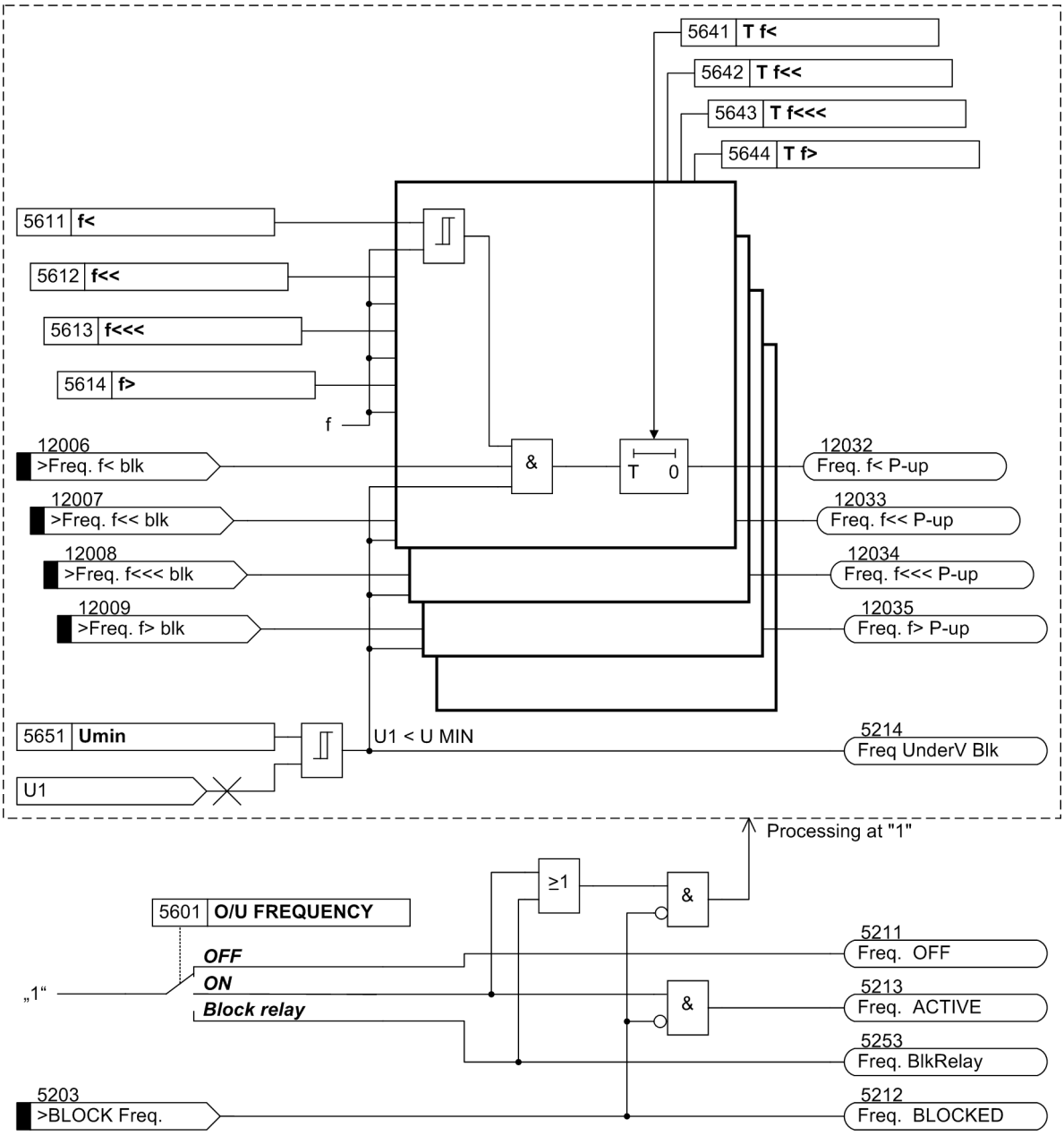

Figure 2-106 Logic diagram of frequency protection

2.16.2 Setting Notes

General

The application of frequency protection is only possible in 3-phase protected objects. Furthermore, it is required that the device is connected to a three-phase voltage transformer.

Frequency protection is only in effect and accessible if address 156 was set to **FREQUENCY Prot.** ***Enabled*** during configuration of the protection function (section 2.1.3.

Under address 5601 **O/U FREQUENCY** the frequency protection ***ON*** or ***OFF*** can be set. Furthermore, the command can be blocked if the protective function is enabled (***Block relay***).

Pickup Values, Times

If the frequency protection is used for network splitting or load shedding, the setting values depend on the system conditions. Normally, the objective is a graded load shedding that takes the priority of consumers or consumer groups into account.

Other types of application are available in the power station sector. The frequency values to be set mainly depend, also in these cases, on power system/power station operator specifications. In this context, frequency decrease protection ensures the power station's own demand by disconnecting it from the power system on time. The turbo regulator then regulates the machine set to nominal speed so that the station's own requirement can be continuously provided with rated frequency.

Generally, turbine-driven generators can be continuously operated down to 95 % of nominal frequency provided that the apparent power is reduced proportionally. However, for inductive consumers, the frequency reduction not only means greater current consumption but also endangers stable operation. Therefore, a short-term frequency reduction down to approx. 48 Hz (at f_N = 50 Hz) or 58 Hz (at f_N = 60 Hz) or 16 Hz (at f_N = 16,7 Hz) is permitted.

A frequency increase can, for example, occur due to a load shedding or malfunctioning of the speed control (e.g. in an island network). A frequency increase protection, e.g. as speed control protection can be used here.

The setting ranges of the frequency stages depend on the set rated frequency. The three underfrequency stages are set under addresses

Level	Address at f_N =			Parameter name
	50 Hz	60 Hz	16.7 Hz	
f<Stage	5611	5621	5631	f<
f<<Stage	5612	5622	5632	f<<
f<<<Stage	5613	5623	5633	f<<<
f>Stage	5614	5624	5634	f>

By means of setting an underfrequency stage to 0, it can be deactivated. If the overfrequency stage is not required, set it to ∞.

The delay times can be set under addresses 5641 **T f<**, 5642 **T f<<**, 5643 **T f<<<** and 5644 **T f>**. Hereby, a grading of frequency stages can be achieved or the required switching operations in the power station sector can be triggered. The set times are pure additional delay times that do not include the operating times (measuring time, drop-out time) of the protective function. If a delay time is set to ∞, this does not result in a trip, but the pickup will be indicated.

Setting example:

The following example illustrates a setting of the frequency protection for a generator that indicates a delayed warning at approx. 1 % decreased frequency. In case of a further frequency decrease, the generator is disconnected from the network and finally shut down.

Level	Changes to CPU modules	Setting at f_N =			Delay
		50 Hz	60 Hz	16.7 Hz	
f<	Warning	49.50 Hz	59.50 Hz	16.60 Hz	20.00 s
f<<	Disconnection from the network	48.00 Hz	58.00 Hz	16.00 Hz	1.00 s
f<<<	Shutdown	47.00 Hz	57.00 Hz	15.70 Hz	6.00 s
f>	Warning and trip	52.00 Hz	62.00 Hz	17.40 Hz	10.00 s

Minimum Voltage

The frequency protection is blocked on undershooting the minimum voltage **U MIN**. The recommended value is approx. 65 % U_N. The setting value is based on phase-phase voltages. If the frequency protection of one side of the main protected object, the value must be set as reference value under address 5652 **U MIN**, e.g. 0.65. When assigned to a measuring location the value of phase-phase voltage must be set under address 5651 **Umin** in Volt , e.g. 71. V at $U_{N\,sec}$ = 110 V (65 % of 110 V). The minimum voltage threshold can be deactivated by setting this address to 0. However, no frequency measuring is possible below approx. 5 V (secondary) so that the frequency protection can no longer function.

2.16.3 Settings

Addr.	Parameter	Setting Options	Default Setting	Comments
5601	O/U FREQUENCY	OFF ON Block relay	OFF	Over / Under Frequency Protection
5611	f<	40.00 .. 49.99 Hz; 0	49.50 Hz	Pick-up frequency f<
5612	f<<	40.00 .. 49.99 Hz; 0	48.00 Hz	Pick-up frequency f<<
5613	f<<<	40.00 .. 49.99 Hz; 0	47.00 Hz	Pick-up frequency f<<<
5614	f>	50.01 .. 66.00 Hz; ∞	52.00 Hz	Pick-up frequency f>
5621	f<	50.00 .. 59.99 Hz; 0	59.50 Hz	Pick-up frequency f<
5622	f<<	50.00 .. 59.99 Hz; 0	58.00 Hz	Pick-up frequency f<<
5623	f<<<	50.00 .. 59.99 Hz; 0	57.00 Hz	Pick-up frequency f<<<
5624	f>	60.01 .. 66.00 Hz; ∞	62.00 Hz	Pick-up frequency f>
5631	f<	10.00 .. 16.69 Hz; 0	16.50 Hz	Pick-up frequency f<
5632	f<<	10.00 .. 16.69 Hz; 0	16.00 Hz	Pick-up frequency f<<
5633	f<<<	10.00 .. 16.69 Hz; 0	15.70 Hz	Pick-up frequency f<<<
5634	f>	16.67 .. 22.00 Hz; ∞	17.40 Hz	Pick-up frequency f>
5641	T f<	0.00 .. 100.00 sec; ∞	20.00 sec	Delay time T f<
5642	T f<<	0.00 .. 600.00 sec; ∞	1.00 sec	Delay time T f<<
5643	T f<<<	0.00 .. 100.00 sec; ∞	6.00 sec	Delay time T f<<<

Addr.	Parameter	Setting Options	Default Setting	Comments
5644	T f>	0.00 .. 100.00 sec; ∞	10.00 sec	Delay time T f>
5651	Umin	10.0 .. 125.0 V; 0	65.0 V	Minimum Required Voltage for Operation
5652	U MIN	0.10 .. 1.25 U/UnS; 0	0.65 U/UnS	Minimum voltage

2.16.4 Information List

No.	Information	Type of Information	Comments
5203	>BLOCK Freq.	SP	>BLOCK frequency protection
5211	Freq. OFF	OUT	Frequency protection is switched OFF
5212	Freq. BLOCKED	OUT	Frequency protection is BLOCKED
5213	Freq. ACTIVE	OUT	Frequency protection is ACTIVE
5214	Freq UnderV Blk	OUT	Frequency protection undervoltage Blk
5254	Freq. error VT	OUT	Frequency protection: error VT assign.
5255	Freq. err. Obj.	OUT	Frequency prot.:Not avail. for this obj.
12006	>Freq. f< blk	SP	>Frequency prot.: Block Stage f<
12007	>Freq. f<< blk	SP	>Frequency prot.: Block Stage f<<
12008	>Freq. f<<< blk	SP	>Frequency prot.: Block Stage f<<<
12009	>Freq. f> blk	SP	>Frequency prot.: Block Stage f>
12032	Freq. f< P-up	OUT	Frequency prot.: Pick-up Stage f<
12033	Freq. f<< P-up	OUT	Frequency prot.: Pick-up Stage f<<
12034	Freq. f<<< P-up	OUT	Frequency prot.: Pick-up Stage f<<<
12035	Freq. f> P-up	OUT	Frequency prot.: Pick-up Stage f>
12036	Freq. f< TRIP	OUT	Frequency prot.: Trip Stage f<
12037	Freq. f<< TRIP	OUT	Frequency prot.: Trip Stage f<<
12038	Freq. f<<< TRIP	OUT	Frequency prot.: Trip Stage f<<<
12039	Freq. f> TRIP	OUT	Frequency prot.: Trip Stage f>

2.17 Circuit Breaker Failure Protection

The circuit breaker failure protection provides rapid back-up fault clearance, in the event that the assigned circuit breaker fails to respond to a protective relay.

7UT613/63xis equipped with two breaker failure protection functions that can be used independently from each other and for different locations of the protected object, i.e. for different circuit breakers. You can also work with different starting criteria (see below). Allocation of the protective function to the sides or measuring locations and breakers were done according to Section 2.1.4.

2.17.1 Function Description

General

The following information refers to the first breaker failure protection, if not stated otherwise.

Whenever the differential protection or any internal or external fault protection function of a feeder issues a trip command to the circuit breaker, for example, this is indicated to the breaker failure protection at the same time (figure 2-107). A timer T–BF in the breaker failure protection is started. The timer runs as long as a trip command is present and current continues to flow through the breaker poles.

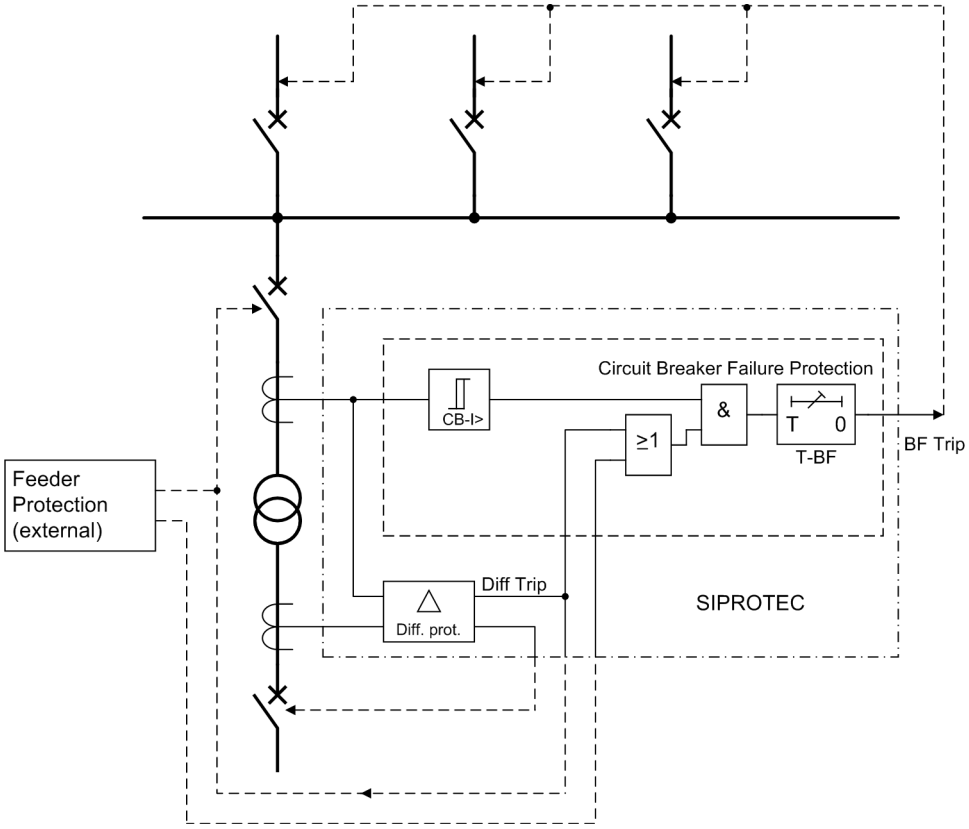

Figure 2-107 Simplified function diagram of circuit breaker failure protection with current flow monitoring

Normally, the breaker will open and interrupt the fault current. The current monitoring stage BF-I> quickly resets (typically $^1/_2$ AC cycle) and stops the timer T-BF.

If the trip command is not executed (in case of breaker failure), current continues to flow and the timer runs to its set limit. The breaker failure protection then issues a command to trip the backup breakers which interrupt the fault current.

The reset time of the starting protection functions is not relevant because the breaker failure protection itself recognises the interruption of the current.

For protection relays where the tripping criterion is not dependent on current (e.g. overexcitation protection or Buchholz protection), the current flow is not a reliable criterion to determine the correct response of the circuit breaker. In such cases, the circuit breaker position can be derived from the auxiliary contacts of the breaker or from the feed-back information of the integrated control function. Therefore, instead of monitoring the current, the condition of the circuit breaker auxiliary contacts are monitored. (Figure 2-108).

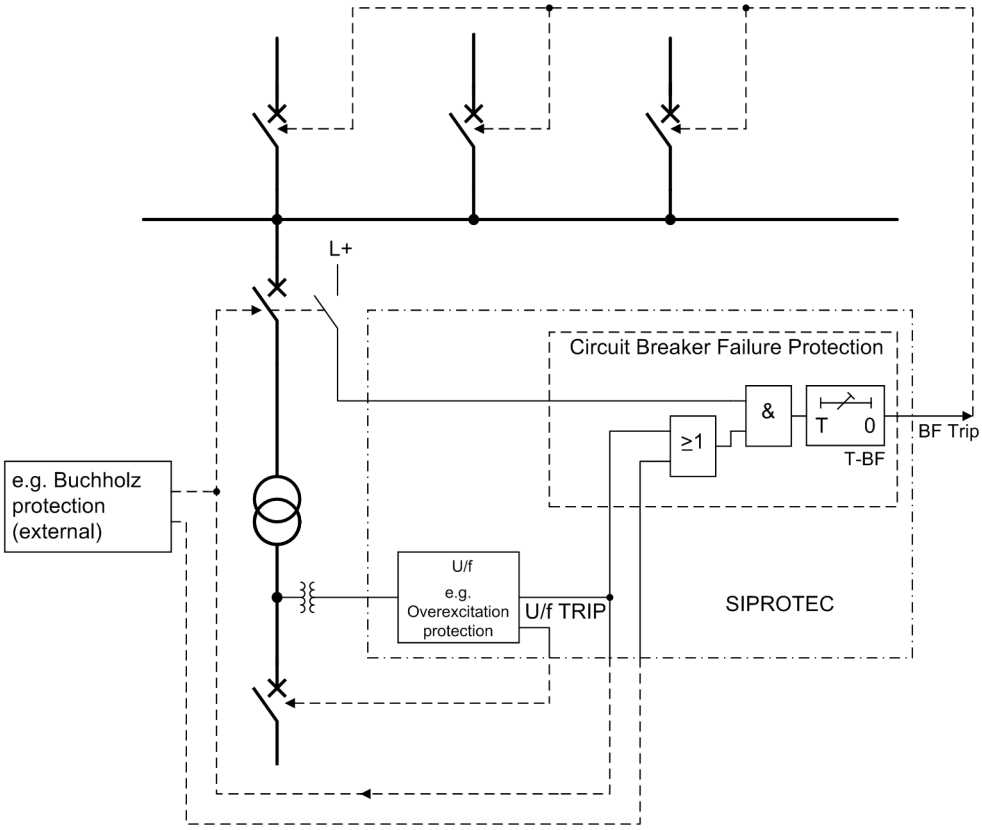

Figure 2-108 Simplified function diagram of circuit breaker failure protection with current flow monitoring

In 7UT613/63x both criteria, i.e. current flow and breaker position indication, are evaluated. If only one of the criteria is intended to be considered, this can be achieved by corresponding configuration (Subsections 2.1.4).

Please make sure that the side or measuring location of the current and the monitored circuit breaker belong together! Both must be located at the supply side of the protected object. In the simplified function diagram (figure 2-107) the current is measured at the busbar side of the transformer (= supply side), therefore the circuit breaker at the

busbar side is supervised. The adjacent circuit breakers are those of the busbar illustrated.

With generators the breaker failure protection usually affects the network breaker. In cases other than that, the supply side must be the relevant one.

Initiation

The breaker failure protection can be initiated by internal protective functions of the 7UT613/63x, i.e. trip commands of protective functions or via CFC (internal logic functions), or by external trip signals via a binary input. Both sources are processed in the same way but separately annunciated.

The breaker failure protection checks now the continuation of current flow through the breaker to be monitored. Additionally, the breaker position (read from the feedback of the auxiliary contacts) is checked provided associated feedback information is available.

The current criterion is met if at least one of the three phase currents exceeds a settable threshold, e.g. **PoleOpenCurr.S1** if the breaker failure protection is assigned (see also Subsection 2.1.4 under margin heading „Circuit Breaker Status“. Special features detect the instant of current interruption. In case of sinusoidal currents the current interruption is detected after approximately $^1/_2$ AC cycle. With aperiodic DC current components in the fault current and/or in the current transformer secondary circuit after interruption (e.g. current transformers with linearized core), or saturation of the current transformers caused by the DC component in the fault current, it can take one AC cycle before the interruption of the primary current is reliably detected.

Evaluation of the breaker auxiliary contacts is carried out only when no current flow is detected at the instant of initiation, i.e. the trip command of a protection function (internal or external) which is to start the breaker failure protection. In this case the breaker is assumed to be open as soon as the auxiliary contact criterion indicates open breaker.

Once the current flow criterion has picked up before the trip signal from the initiating protection, the circuit breaker is assumed to be open as soon as the current disappears, even if the associated auxiliary contact does not (yet) indicate that the circuit breaker has opened. This gives preference to the more reliable current criterion and avoids false operation due to a defect e.g. in the auxiliary contact mechanism or circuit. If the auxiliary contacts indicate open breaker even though current is flowing, an alarm is given (FNos 30135 to 30144).

If both positions of the breaker are indicated (NO contact and NC contact via double point indication) the auxiliary contact criterion is not evaluated if, at the instant of initiation, an intermediate position is indicated, but only the current criterion. On the other hand, if the breaker failure protection is already started, the breaker is assumed to have opened as soon as it is no longer indicated as closed, even if it is actually in intermediate position.

Initiation can be blocked via the binary input „>BLOCK BkrFail“ (No 047.2404 (e.g. during test of the feeder protection relay).

Delay Time and Breaker Failure Trip

The breaker failure protection can be operated single-stage or two-stage

With single-stage breaker failure protection, the trip command is routed to the adjacent circuit breakers should the local feeder breaker fail. The adjacent circuit breakers are all those which must trip in order to interrupt the fault current, i.e. the breakers which feed the busbar or the busbar section to which the feeder under consideration is connected.

After initiation the timer **T2** is started. When this time has elapsed, the indication „BF T2-TRIP(bus)“ (Fno 047.2655) appears which is also intended for trip of the adjacent breakers.

With two-stage breaker failure protection the trip command of the initiating protection is repeated in a first stage of the breaker failure protection **T1** on the feeder circuit breaker, usually on a second trip coil. This is achieved via the output indication „BF T1-TRIP(loc)“ (Fno 047.2654). A second time stage **T2** monitors the response to this repeated trip command and is used to trip the adjacent breakers of the busbar or busbar section if the fault has not yet been cleared after the repeated trip command. The output indication „BF T2-TRIP(bus)“ (Fno 047.2655) is again used for tripping the adjacent breakers.

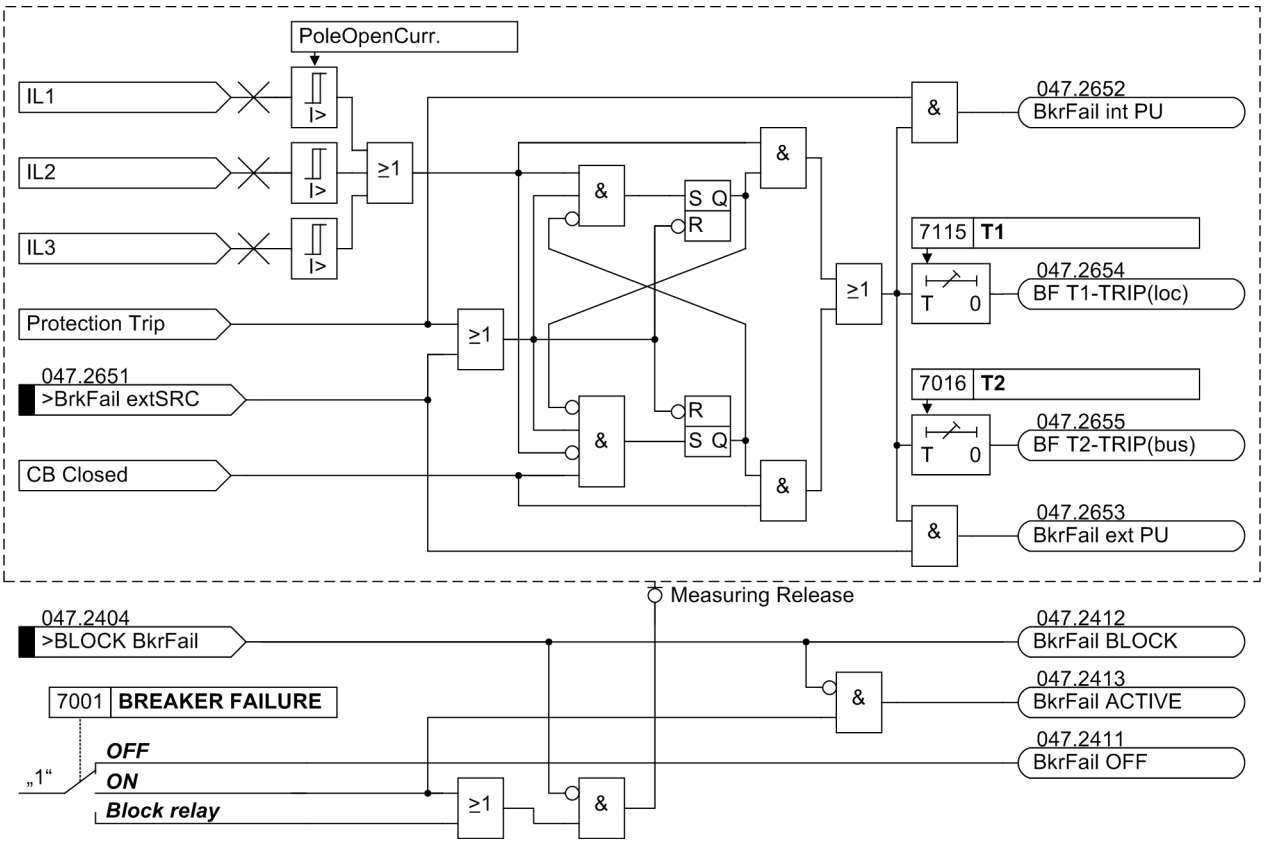

Figure 2-109 Logic diagram of the breaker failure protection (simplified)

Indication numbers and indication designations refer tot he first circuit-breaker failure protection.

2.17.2 Setting Notes

General



Note

The first circuit breaker failure protection is described in the setting instructions. The parameter addresses and message numbers of the second circuit breaker failure protection are described at the end of the setting instructions under „Additional Circuit Breaker Failure Protection Functions“.

The circuit-breaker failure protection is only effective and accessible if address 170=**BREAKER FAILURE** ***Enabled*** is set during configuration. In case of single-phase busbar protection no circuit-breaker failure protection is possible.

If the second circuit-breaker failure protection is used, this must be set under address 171 **BREAKER FAIL. 2** to ***Enabled***.

When assigning the protection functions (section 2.1.4 under margin heading „Additional 3-phase Protection Functions“, it was determined under address 470 **BREAKER FAIL.AT** at which side or measuring location of the protected the circuit-breaker failure protection must be active. Please ensure that the side or measuring location of the current and the monitored circuit breaker belong together! Both must be at the supply side of the protected object.

For the second circuit-breaker failure protection the respective address 471 **BREAKER FAIL2AT** applies.

Under address 7101 **BREAKER FAILURE** the first circuit-breaker failure protection ***ON*** or ***OFF*** is set. The option ***Block relay*** allows to operate the protection but the trip output relay is blocked.

The second breaker failure protection is switched at address 7101 **BREAKER FAILURE** ***ON*** or ***OFF***.

Initiation

Three statements are essential for the correct initiation of the circuit breaker failure protection:

The Current-flow MonitoringCurrent flow monitoring ensures that the current flow stops after the trip command has been issued to the breaker to be monitored. It uses the values set in the General Power System Data 2 is decisive (see section 2.1.6.1 under margin heading „Circuit Breaker Status“). The decisive value is the setting assigned to the side or measuring location that indicates the current of the monitored circuit breaker (addresses 1111 to 1125). This value will certainly be undershot in case of an open circuit breaker.

The assignment of the CB auxiliary contacts or the CB feed-back information was executed in accordance with section 2.1.4 under „Circuit-breaker Data“. The configuration of the respective binary inputs must be complete.

The tripping command for the monitored breaker is determined by address 7111 or 7112 **START WITH REL.** (depending on the version of the device). Choose the number of the output relay which shall trip the breaker to be monitored. If **START WITH REL.** is parameterised on 0 , no initiation occurs via the internal binary output. Since 7UT613/63x will normally trip several circuit breakers by the various protection functions, the device must be informed about which trip command is decisive for the initiation of the breaker failure protection. If the breaker failure protection is intended to be

initiated also by external trip commands (for the same breaker) the device has to be informed about this trip via the binary input „>BrkFail extSRC“ (No 047.2651).

The activation of the relay contact set under **START WITH REL.**, only causes the initiation of the circuit breaker failure protection if this activation is effected simultaneously with the indication (fast indication) of a protection function.

If the circuit breaker is supposed to be activated behind the respective relay contact by means of a controlled indication, this message must be conducted, for example, via the DC (direct coupling) function and its TRIP command. During configuration, the DC-TRIP would cause the respective relay to start the circuit breaker failure protection.

Two-stage Breaker Failure Protection

In two-stage operation, the trip command is sent after a delay time **T1** (address 7115) to the locally monitored feeder circuit breaker, normally to a separate set of trip coils of the breaker.

The TRIP command of a circuit breaker failure protection may not be allocated to a relay, which is monitored by a different circuit breaker failure protection. This cascading does not cause initiation.

If the circuit breaker does not respond to the repeated trip command, the protection trips after a second delay time **T2** (address 7116) the adjacent circuit breakers, i.e. those of the busbar or the affected busbar section and, if necessary, also the circuit breaker at the remote end, if the fault is not yet eliminated.

The delay times are set dependant on the maximum operating time of the feeder circuit breaker and the reset time of the current detectors of the breaker failure protection, plus a safety margin which allows for any tolerance of the delay timers. The time sequences are illustrated in Figure 2-110. For sinusoidal currents one can assume that the reset time of the current detectors is about $^1/_2$ cycle but if current transformer saturation is expected, then $1^1/_2$ cycles should be assumed as worst case.

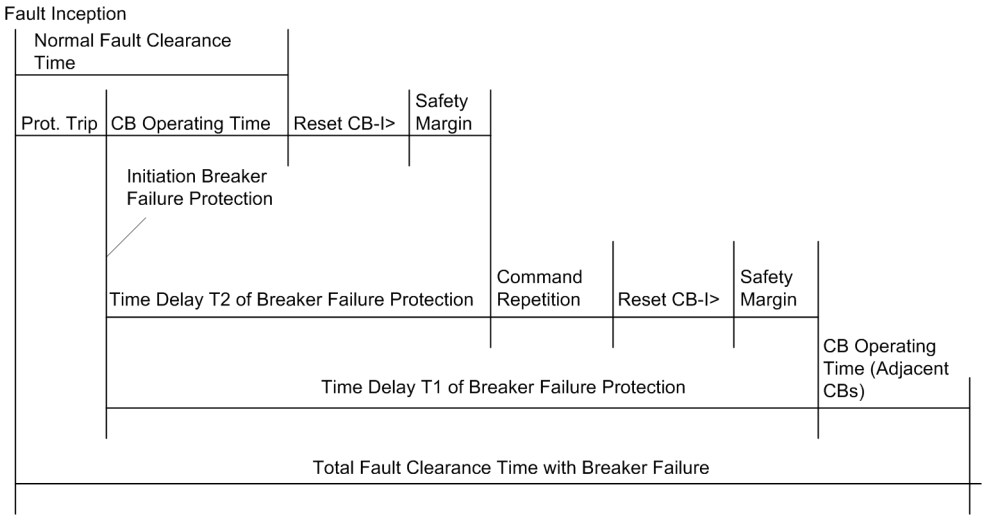

Figure 2-110 Time sequence for normal clearance of a fault, and with circuit breaker failure example for two-stage breaker failure protection

Single-stage Breaker Failure Protection

With single-stage operation, the adjacent circuit breakers (i.e. the breakers of the busbar zone and, if applicable, the breaker at the remote end) are tripped after a delay time **T2** (address 7116) following initiation, should the fault not have been cleared within this time.

The delay time **T1** (address 7115) is then set to ∞ since it is not needed.

The delay times are determined from the maximum operating time of the feeder circuit breaker, the reset time of the current detectors of the breaker failure protection, plus a safety margin which allows for any tolerance of the delay timers. The time sequences are illustrated in Figure 2-111. For sinusoidal currents one can assume that the reset time of the current detectors is about $^1/_2$ cycle but if current transformer saturation is expected, then$1^1/_2$ cycles should be assumed as worst case.

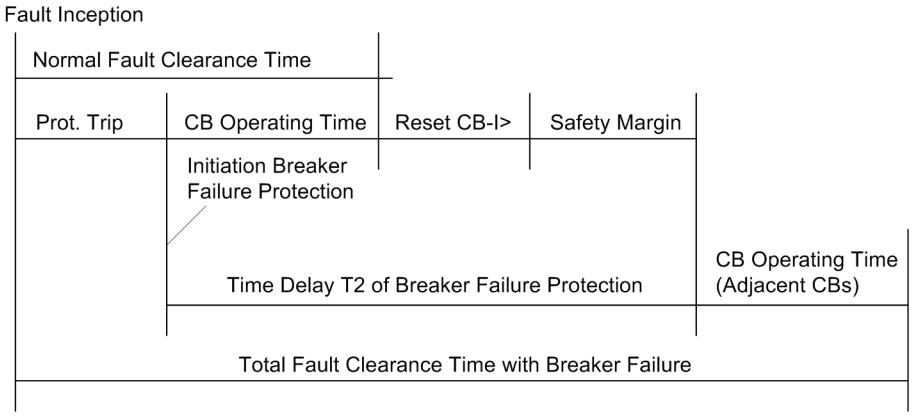

Figure 2-111 Time sequence for normal clearance of a fault, and with circuit breaker failure example for single-stage breaker failure protection

Additional Circuit Breaker Failure Protection Functions

In the aforementioned description, the first circuit breaker failure protection is described respectively. The differences in the parameter addresses and message numbers of the first and second circuit breaker failure protection are illustrated in the following table. The positions marked by x are identical.

	Parameter addresses	Message no.
1. Circuit breaker failure protection	70xx	047.xxxx(.01)
2. Circuit breaker failure protection	71xx	206.xxxx(.01)

2.17.3 Settings

Addr.	Parameter	Setting Options	Default Setting	Comments
7001	BREAKER FAILURE	OFF ON Block relay	OFF	Breaker Failure Protection
7011	START WITH REL.	0 .. 8	0	Start with Relay (intern)
7012	START WITH REL.	0 .. 24	0	Start with Relay (intern)
7015	T1	0.00 .. 60.00 sec; ∞	0.15 sec	T1, Delay of 1st stage (local trip)
7016	T2	0.00 .. 60.00 sec; ∞	0.30 sec	T2, Delay of 2nd stage (busbar trip)

2.17.4 Information List

No.	Information	Type of Information	Comments
047.2404	>BLOCK BkrFail	SP	>BLOCK Breaker failure
047.2411	BkrFail OFF	OUT	Breaker failure is switched OFF
047.2412	BkrFail BLOCK	OUT	Breaker failure is BLOCKED
047.2413	BkrFail ACTIVE	OUT	Breaker failure is ACTIVE
047.2491	BkrFail Not av.	OUT	Breaker failure Not avail. for this obj.
047.2651	>BrkFail extSRC	SP	>Breaker failure initiated externally
047.2652	BkrFail int PU	OUT	Breaker failure (internal) PICKUP
047.2653	BkrFail ext PU	OUT	Breaker failure (external) PICKUP
047.2654	BF T1-TRIP(loc)	OUT	BF TRIP T1 (local trip)
047.2655	BF T2-TRIP(bus)	OUT	BF TRIP T2 (busbar trip)

2.18 External Trip Commands

2.18.1 Function Description

Direct Trip Commands

Two desired trip signals from external protection or supervision units can be incorporated into the processing of the differential protection 7UT613/63x. The signals are couples into the device via binary inputs. Like the internal protection and supervision signals, they can be annunciated, delayed, transmitted to the output trip relays, or blocked individually. This allows to include mechanical protective devices (e.g. pressure switch, Buchholz protection) in the processing of the protection relay.

The minimum trip command duration set for all protective functions are also valid for these external trip commands (**`TMin TRIP CMD`**, address 851).

The logic diagram illustrates these „direct couplings“. Two of these functions are available. The message numbers are illustrated for external trip command 1.

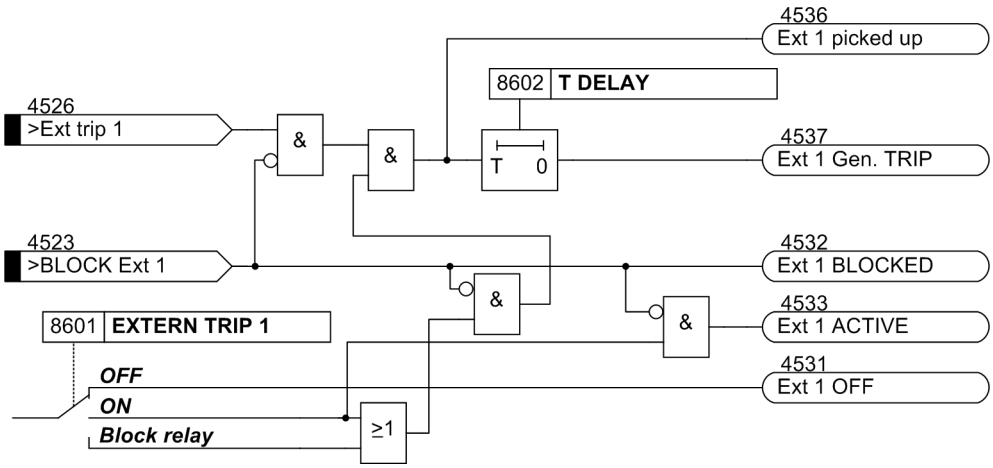

Figure 2-112 Logic Diagram of External Trip Feature — illustrated for external trip 1 (simplified)

Transformer Messages

In addition to the external trip commands as described above, some typical messages from power transformers can be incorporated into the processing of the 7UT613/63x via binary inputs. This prevents the user from creating user-specified annunciations.

These messages are known as the Buchholz alarm, Buchholz trip and Buchholz tank alarm as well as gassing alarm of the oil (see table 2-10).

Table 2-10 Transformer messages

No.	Information	Type of Information	Description
390	„>Gas in oil“	SI	>Warning stage from gas in oil detector
391	„>Buchh. Warn“	SI	>Warning stage from Buchholz protection
392	„>Buchh. Trip“	SI	>Tripp. stage from Buchholz protection
393	„>Buchh. Tank“	SI	>Tank supervision from Buchh. protect.

Blocking Signal for External Faults

For transformers so-called sudden pressure relays (SPR) are occasionally installed in the tank which are meant to switch off the transformer in case of a sudden pressure increase. Not only transformer failures but also high traversing fault currents originating from external faults can lead to a pressure increase.

External faults are quickly recognised by the 7UT613/63x (also refer to differential protection, „Add-on Restraint during External Faults“, section 2.2). A blocking signal can be created by means of a CFC logic in order to prevent from erroneous trip of the SPR.

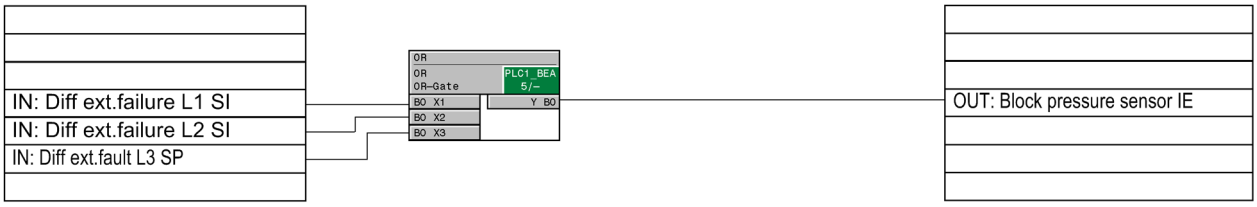

Figure 2-113 CFC chart for blocking of a pressure sensor during external fault

2.18.2 Setting Notes

General

The direct external trip functions are only enabled if addresses 186 **EXT. TRIP 1** and/or 187 **EXT. TRIP 2** have been set to ***Enabled*** during the configuration of the functional scope.

Addresses 8601 **EXTERN TRIP 1** and 8701 **EXTERN TRIP 2** are used to switch the functions individually ***ON*** or ***OFF***, or to block only the trip command (***Block relay***).

Signals included from outside can be stabilised by means of a delay time and thus increase the dynamic margin against interference signals. For external trip functions 1 settings are done in address 8602 **T DELAY**, for external trip function 2 in address 8702 **T DELAY**

2.18.3 Settings

Addr.	Parameter	Setting Options	Default Setting	Comments
8601	EXTERN TRIP 1	OFF ON Block relay	OFF	External Trip Function 1
8602	T DELAY	0.00 .. 60.00 sec; ∞	1.00 sec	Ext. Trip 1 Time Delay
8701	EXTERN TRIP 2	OFF ON Block relay	OFF	External Trip Function 2
8702	T DELAY	0.00 .. 60.00 sec; ∞	1.00 sec	Ext. Trip 2 Time Delay

2.18.4 Information List

No.	Information	Type of Information	Comments
4523	>BLOCK Ext 1	SP	>Block external trip 1
4526	>Ext trip 1	SP	>Trigger external trip 1
4531	Ext 1 OFF	OUT	External trip 1 is switched OFF
4532	Ext 1 BLOCKED	OUT	External trip 1 is BLOCKED
4533	Ext 1 ACTIVE	OUT	External trip 1 is ACTIVE
4536	Ext 1 picked up	OUT	External trip 1: General picked up
4537	Ext 1 Gen. TRIP	OUT	External trip 1: General TRIP
4543	>BLOCK Ext 2	SP	>BLOCK external trip 2
4546	>Ext trip 2	SP	>Trigger external trip 2
4551	Ext 2 OFF	OUT	External trip 2 is switched OFF
4552	Ext 2 BLOCKED	OUT	External trip 2 is BLOCKED
4553	Ext 2 ACTIVE	OUT	External trip 2 is ACTIVE
4556	Ext 2 picked up	OUT	External trip 2: General picked up
4557	Ext 2 Gen. TRIP	OUT	External trip 2: General TRIP

2.19 Monitoring Functions

The device incorporates comprehensive supervision functions which cover both hardware and software; the measured values are continuously checked for plausibility, so that the CT circuits are also included in the monitoring system to a large extent. It is also possible to implement trip circuit supervision, using appropriate binary inputs as available.

2.19.1 Measurement Supervision

2.19.1.1 Hardware Monitoring

The device is monitored by the measurement inputs and the output relays. Monitoring circuits and the processor check the hardware for malfunctions and abnormal states.

Auxiliary and Reference Voltages

The processor voltage of 5 V is monitored by the hardware, as the processor cannot operate if the voltage drops below the minimum value. In that case, the device is not operational. When the correct voltage has re-established the processor system is re-started.

Failure or switch-off of the supply voltage sets the device out of operation; this status is signalled by a „life contact“ (closed or open). Transient dips in supply voltage do not disturb the function of the device (see Technical Data).

The processor monitors the offset and the reference voltage of the AD (analogue-to-digital converter). The protection is blocked in case of inadmissible deviations. Continuous malfunctioning is indicated by the alarm „`Error MeasurSys`“, No 181.

Back-up Battery

The back-up battery guarantees that the internal clock continues to work and that metered values and alarms are stored if the auxiliary voltage fails. The charge level of the battery is checked regularly. On its undershooting a minimum admissible voltage, the indication „`Fail Battery`“, No. 177 is issued.

Memory Components

The working memory (RAM) is tested during booting of the system. If a malfunction occurs, the starting sequence is interrupted and an LED blinks. During operation the memories are checked with the help of their checksum.

For the program memory, the cross-check sum is cyclically generated and compared to a stored reference program cross-check sum.

For the parameter memory, the cross-check sum is cyclically generated and compared to the cross-check sum that is refreshed after each prarameterisation change.

If a fault occurs, the processor system is restarted.

Sampling Frequency

The sampling frequency and the synchronism between the ADC s (analog-to-digital converters) is continuously monitored. If deviations cannot be corrected by another synchronisation, the device sets itself out of operation and the red LED „ERROR“ lights up. The readiness relay drops off and signals the malfunction by its „life contact“.

2.19.1.2 Software Monitoring

Watchdog

For the continuous monitoring of the program execution, a time monitoring is incorporated in the hardware (hardware watchdog). The watchdog expires and resets the processor system causing a complete reboot if the processor fails or when a program loses synchronism.

A further software watchdog ensures that any error in the processing of the programs will be recognised. Such errors also lead to a reset of the processor.

If such an error is not eliminated by restarting, another restart attempt is initiated. If the fault is still present after three restart attempts within 30 s, the protection system will take itself out of service, and the red LED „Blocked“ lights up. The readiness relay („life contact“) drops off and signals the malfunction by its healthy status contact (alternatively as NO or NC contact).

2.19.1.3 Monitoring of Measured Quantities

The device detects and signals most of the interruptions, short-circuits, or wrong connections in the secondary circuits of current or voltage transformers (an important commissioning aid!). The measured quantities are periodically checked in the background for this purpose, as long as no system fault is present.

Current Symmetry

In a healthy three-phase system, symmetry amongst the currents is assumed. The monitoring of the measured values in the device checks this balance for each 3-phase measuring location. The lowest phase current is thus set in relation to the highest. An asymmetry is detected, if (e.g. for side 1)

$|I_{min}|/|I_{max}| <$ **BAL. FACT. I M1** as long as $I_{max}/I_N >$ **BAL. I LIMIT M1**$/I_N$

I_{max} is the highest of the three phase currents and I_{min} the lowest. The symmetry factor **BAL. FACT. I M1** represents the allowable asymmetry of the phase currents while the limit value **BAL. I LIMIT M1** is the lower limit of the operating range of this monitoring (see Figure Current Symmetry Monitoring). Both parameters can be set. The dropout ratio is about 95%.

Current balance monitoring is available separately for each 3-phase measuring location. For single-phase differential busbar protection this function would not be of any use and is thus disabled. Unsymmetrical condition is indicated for the corresponding measuring location e.g. with the alarm „`Fail balan. IM1`“ (No 30110). At the same time, the common annunciation appears: „`Fail I balance`“ (No 163).

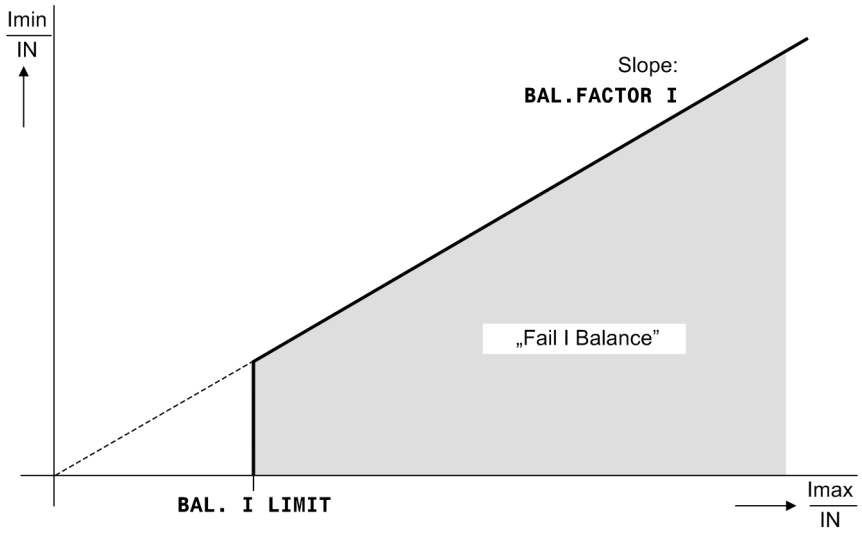

Figure 2-114 Current Symmetry Monitoring

Voltage Symmetry

In healthy network operation it can be expected that the voltages are nearly balanced. If measured voltages are connected to the device, this symmetry is checked in the device by magnitude comparison. To do this, the phase-to-earth voltages are measured. The lowest phase-to-earth voltage is set in relation to the highest. An imbalance is detected when

$|U_{min}|/|U_{max}|$ < **BAL. FACTOR U** as long as $|U_{max}|$ > **BALANCE U-LIMIT**

TherebyU_{max} is the largest of the three phase-to-phase voltages and U_{min} the smallest. The symmetry factor **BAL. FACTOR U** is the measure for the asymmetry of the conductor voltages; the limit value **BALANCE U-LIMIT** is the lower limit of the operating range of this monitoring (see Figure Voltage Symmetry Monitoring). Both parameters can be set. The dropout ratio is about 95 %.

This malfunction is reported as „Fail U balance".

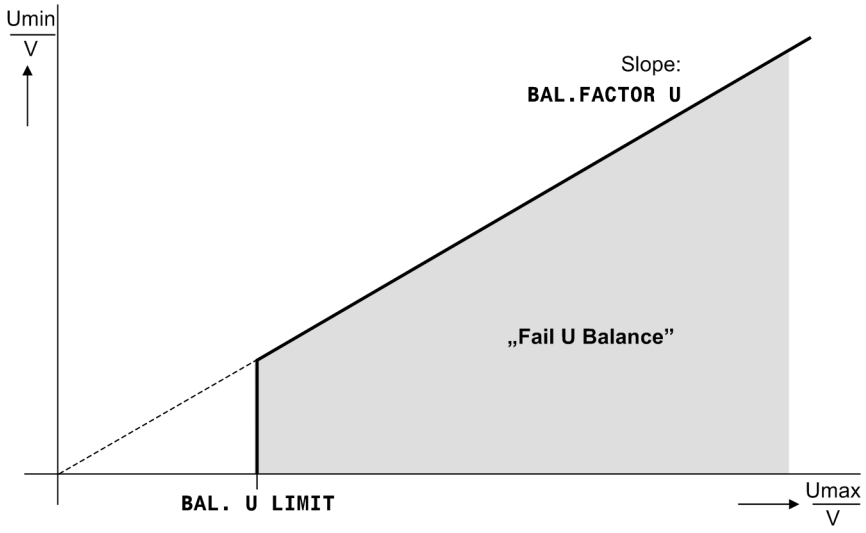

Figure 2-115 Voltage Symmetry Monitoring

Voltage Sum

If measured voltages are connected to the device and these are used, voltage sum supervision is possible. A further prerequisite is that the displacement voltage (e-n voltage of an open delta connection) at the same voltage measuring point is connected to the 4th voltage input U_4 of the device. Then the sum of the three digitised phase voltages must equal three times the zero sequence voltage. Errors in the voltage transformer circuits are detected when

$U_F = |\underline{U}_{L1} + \underline{U}_{L2} + \underline{U}_{L3} – k_U \cdot \underline{U}_{EN}| > 25$ V.

The factor k_U allows for a difference of the transformation ratio between the displacement voltage inputs and the phase voltage inputs. By the settings of the rated voltages and ratios (Subsection 2.1.4 under margin heading „Voltage Transformer Data“) the device is informed about these data. The dropout ratio is about 95 %.

This malfunction is signalled as „`Fail Σ U Ph-E`“ (No. 165).

Current Phase Sequence

To detect swapped connections in the current input circuits, the direction of rotation of the phase currents for three-phase application is checked. Therefore the sequence of the zero crossings of the currents (having the same sign) is checked for each 3-phase measuring location. For single-phase busbar differential protection and single-phase transformers, this function would not be of any use and is thus disabled.

Especially the unbalanced load protection requires clockwise rotation. If rotation in the protected object is reverse, this must be considered during the configuration of the general power system data (Subsection 2.1.4 under „Phase rotation“).

Phase rotation is checked by supervising the phase sequence of the currents, i.e. for clockwise rotation.

$\underline{I}_{L1}$ before $\underline{I}_{L2}$ before $\underline{I}_{L3}$

. The supervision of current rotation requires a minimum current of

$|\underline{I}_{L1}|, |\underline{I}_{L2}|, |\underline{I}_{L3}| > 0{,}5\ I_N$.

If the rotation measured differs from the rotation set, the annunciation for the corresponding measuring location is output, e.g. „`FailPh.Seq IM1`“ (No 30115). At the same time, the common annunciation appears: „`Fail Ph. Seq. I`“ (No 175).

Voltage Phase Sequence

If measured voltages are connected to the device and these are used, the voltage phase rotation is supervised. On clockwise phase rotation this is done by supervising the phase sequence of the voltages

$\underline{U}_{L1}$ before $\underline{U}_{L2}$ before $\underline{U}_{L3}$.

This check is done as long as the voltages have a magnitude of at least

$|\underline{U}_{L1}|, |\underline{U}_{L2}|, |\underline{U}_{L3}| > 40\ \text{V}/\sqrt{3}$

. Wrong phase rotation is indicated by the alarm „`Fail Ph. Seq. U`“ (No 176).

Broken Wire

During steady-state operation the broken wire monitoring registers interruptions in the secondary circuit of the current transformers. In addition to the hazardous potential caused by high voltages in the secondary circuit, this kind of interruptions simulate differential currents to the differential protection, such as those evoked by faults in the protected object.

The broken wire monitor scans the transient behaviour of the currents of each phase for every measuring location. The instantaneous currents are checked for plausibility and continuity. If an instantaneous value does not correspond to the expected value, a broken wire is considered. If the current decays strongly or drops abruptly to 0 (from

>0.1 · I_N), or no zero crossing is registered. The currents flowing in other phases must not exceed 2 I_N.

The differential protection and the restricted earth fault protection are blocked immediately in the relevant measuring location. The protection functions which react on unsymmetrical currents are blocked as well provided they are assigned to the defective measuring location: the time overcurrent protection for residual current and the unbalanced load protection. The device issues the message „Broken wire“ also indicating the affected phase and measuring location.

Blocking is cancelled as soon as the device is again supplied with a current in the relevant phase.

Detection of a broken wire is restricted by technical limits. A broken wire in the secondary circuit can, of course, only be detected when a steady state current has been flowing through the respective phase. Furthermore, a wire break at the instant of zero crossing in current cannot always be detected reliably. No expected value can be created when the frequency is out of the operation frequency (f_N± 10 %).

Note that electronic test devices do not simulate the correct behaviour of broken wire so that pickup may occur during such tests.

Asymmetrical Measuring Voltage Failure "Fuse Failure Monitor".

In the event of a measured voltage failure due to a short circuit fault or a broken conductor in the secondary circuit certain protection and monitoring functions (whose operation is based on undershooting a measuring voltage) can be spuriously triggered. This delays an unauthorised trip. For 7UT613/63x this applies to forward power supervision P< and the undervoltage protection.

If fuses are used instead of a secondary miniature circuit breaker (VT mcb) with connected auxiliary contacts, then the („fuse failure monitoring“) can detect problems in the voltage transformer secondary circuit. Of course the miniature circuit breaker and the „fuse failure monitor“ can be used at the same time.

The asymmetrical measured voltage failure is characterised by its voltage asymmetrical with simultaneous current symmetry. Figure 2-116 depicts the logic diagram of the „Fuse Failure Monitors“ during asymmetrical failure of the measured voltage. As measured values the connected voltages and currents of the measured locations or sides are used that are assigned voltages. The fuse failure monitor is therefore only possible for 7UT613 and 7UT633, as 7UT635 it is not equipped with measuring voltage inputs. The fuse failure monitor can only be used for three-phase protected objects.

If there is substantial voltage asymmetry of the measured values, without asymmetry of the currents being registered at the same time, this indicates the presence of an asymmetrical failure in the voltage transformer secondary circuit.

The asymmetry of the voltage is detected by the fact that the negative sequence voltage exceeds the settable value **`FFM U>(min)`**. The current is assumed to be sufficiently symmetrical if both the zero sequence as well as the negative sequence current are below the settable threshold . In at least one phase the current has to flow above the limit , as the asymmetry cannot function without a minimal measured quantity.

As soon as this is recognised all functions that operate on the basis of undervoltage are blocked. Immediate blocking demands that current flows in at least one of the phases.

If a zero sequence or negative sequence current is detected within approximately 10 s after recognition of this criterion, the protection assumes a short-circuit and removes the blocking by the „Fuse Failure Monitor“ for the duration of the fault. If on the other hand the voltage failure criterion is present for longer than approx. 10 s, the blocking

is permanently activated (latching of the voltage criterion after 10 s). Only 10 s after the voltage criterion has been removed by correction of the secondary circuit failure, will the blocking automatically reset, thereby releasing the blocked protection functions again.

The release „Current Criterion“ for „VT FuseFail“ is determined by assignment **VT SET** according to the measuring location selection.

Figure 2-116 shows the assignment to measuring location 1 or side 1 with **one** assigned measuring location. That means that, for example, during assignment to side 2, whereby measuring location 2 **and** measuring location 3 are assigned to side 2, evaluation of the addresses 1122 **PoleOpenCurr.M2** and 1123 **PoleOpenCurr.M3**) occurs.

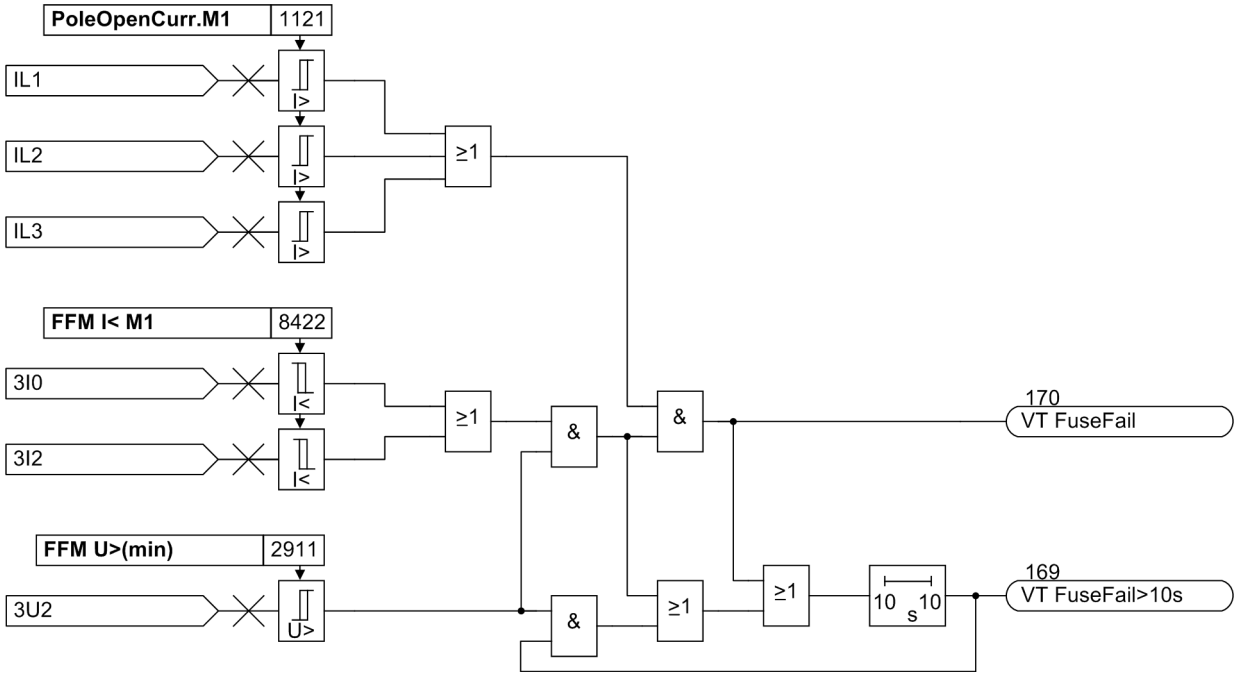

Figure 2-116 Logic diagram of the "fuse failure monitor" with zero and negative sequence system (simplified).

Three-Phase Measuring Voltage Failure "Fuse Failure Monitor"

A three-phase failure of the secondary measured voltage can be distinguished from an actual system fault by the fact that the currents have no significant change in the event of a failure in the secondary measured voltage. For this reason, the sampled current values are routed to a buffer, so that the difference between the present and stored current values can be analysed to recognise the magnitude of the current differential (current differential criterion). Decisive are the connected voltages and currents of the measured locations or sides are used that are assigned voltages.

A three-pole voltage failure is detected if

- all three phase–earth voltages are smaller than the threshold FFM UMEAS<,
- the current differential in all three phases is bigger than in the preset expected value and
- all three phase current amplitudes are greater than the corresponding side/measuring location set residual current I-REST for the detection of a closed breaker.

If such a voltage failure is recognised, the protection functions are blocked until the voltage failure is removed; afterwards the blocking is automatically removed. For

7UT613/63x this applies to forward power supervision P< and the undervoltage protection.

2.19.1.4 Setting Notes

Measured Value Monitoring

The sensitivity of the measured value monitoring can be changed. Default values are set at the factory, which are sufficient in most cases. If especially high operating asymmetry in the currents and/or voltages is to be expected for the application, or if it becomes apparent during operation that certain monitoring functions activate sporadically, then the setting should be less sensitive.

The current symmetry supervision can be switched ***ON*** or ***OFF*** in address 8101 **BALANCE I**, the voltage supervision (if available) in address 8102 **BALANCE U**.

The current phase sequence can be switched ***ON*** or ***OFF*** in address 8105 **PHASE ROTAT. I**; the voltage sequence monitoring (if available) in address 8106 **PHASE ROTAT. U**.

In address 8104 **SUMMATION U** the voltage sum monitoring ***ON*** or ***OFF*** can be set (if available).

Address 8111 **BAL. I LIMIT M1** determines the threshold current for measuring location 1 above which the current balance supervision is effective. Address 8112 **BAL. FACT. I M1** is the associated symmetry factor; that is, the slope of the symmetry characteristic curve. In order to avoid activation during short-term asymmetries, the monitoring is delayed at address 8113 **T Sym. I th. M1**. This parameter can only be set with DIGSI at **Additional Settings**. The time delay usually amounts to a few seconds.

The same considerations apply for the further measuring locations, as far as they are available and allocated:

Address 8121 **BAL. I LIMIT M2**, 8122 **BAL. FACT. I M2** and 8123 **T Sym. I th. M2** for measuring location 2,

address 8131 **BAL. I LIMIT M3**, 8132 **BAL. FACT. I M3** and 8133 **T Sym. I th. M3** for measuring location 3,

address 8141 **BAL. I LIMIT M4**, 8142 **BAL. FACT. I M4** and 8143 **T Sym. I th. M4** for measuring location 4,

address 8151 **BAL. I LIMIT M5**, 8152 **BAL. FACT. I M5** and 8153 **T Sym. I th. M5** for measuring location 5.

Address 8161 **BALANCE U-LIMIT** determines the threshold voltage above which the voltage balance supervision is effective. Address 8162 **BAL. FACTOR U** is the associated symmetry factor, i.e. the slope of the symmetry characteristic curve (if voltages available). In order to avoid activation during short-term asymmetries, the monitoring is delayed at address 8163 **T BAL. U LIMIT**. This parameter can only be set with DIGSI at **Additional Settings**. The time delay usually amounts to a few seconds.

In address 8401 **BROKEN WIRE** the broken wire monitoring can be enabled or disabled.

Asymmetrical measured voltage failure (Fuse-failure monitor)

The settings for the fuse failure monitor for single-phase measuring voltage failure (address 8426 **FFM U<max (3ph)**) are to be selected so that reliable activation occurs if a phase voltage fails and no false activation occurs during ground faults. Addresses 8422 **FFM I< M1**, 8423 **FFM I< M2** and 8424 **FFM I< M3** must be set for the re-

spective measuring location or side (in case of earth faults, below the smallest fault current). This parameter can only be altered in DIGSI at **Additional Settings**.

In address 8403 **FUSE FAIL MON.** the fuse-failure monitor, in case of asymmetrical tests, for example can be switched **off**.

Three-phase Measured Voltage Failure (Fuse-failure Monitor)

At address 8426 **FFM U<max (3ph)** the minimum voltage is set. If the measured voltage drops below this threshold and a simultaneous current jump is not detected while all three-phase currents are greater than the minimum current required for the impedance measurement by the distance protection according to (addresses 1111 to 1142) a three-phase measured voltage failure is recognised. This parameter can only be set with DIGSI at **Additional Settings**.

2.19.1.5 Settings

Addresses which have an appended "A" can only be changed with DIGSI, under Additional Settings.

The table indicates region-specific presettings. Column C (configuration) indicates the corresponding secondary nominal current of the current transformer.

Addr.	Parameter	C	Setting Options	Default Setting	Comments
8101	BALANCE I		ON OFF	OFF	Current Balance Supervision
8102	BALANCE U		ON OFF	OFF	Voltage Balance Supervision
8104	SUMMATION U		ON OFF	OFF	Voltage Summation Supervision
8105	PHASE ROTAT. I		ON OFF	OFF	Current Phase Rotation Supervision
8106	PHASE ROTAT. U		ON OFF	OFF	Voltage Phase Rotation Supervision
8111	BAL. I LIMIT M1	1A	0.10 .. 1.00 A	0.50 A	Current Balance Monitor Meas. Loc. 1
		5A	0.50 .. 5.00 A	2.50 A	
8112	BAL. FACT. I M1		0.10 .. 0.90	0.50	Bal. Factor for Curr. Monitor Meas.Loc.1
8113A	T Sym. I th. M1		5 .. 100 sec	5 sec	Symmetry Iph: Pick-up delay
8121	BAL. I LIMIT M2	1A	0.10 .. 1.00 A	0.50 A	Current Balance Monitor Meas. Loc. 2
		5A	0.50 .. 5.00 A	2.50 A	
8122	BAL. FACT. I M2		0.10 .. 0.90	0.50	Bal. Factor for Curr. Monitor Meas.Loc.2
8123A	T Sym. I th. M2		5 .. 100 sec	5 sec	Symmetry Iph: Pick-up delay
8131	BAL. I LIMIT M3	1A	0.10 .. 1.00 A	0.50 A	Current Balance Monitor Meas. Loc. 3
		5A	0.50 .. 5.00 A	2.50 A	
8132	BAL. FACT. I M3		0.10 .. 0.90	0.50	Bal. Factor for Curr. Monitor Meas.Loc.3

Addr.	Parameter	C	Setting Options	Default Setting	Comments
8133A	T Sym. I th. M3		5 .. 100 sec	5 sec	Symmetry Iph: Pick-up delay
8141	BAL. I LIMIT M4	1A	0.10 .. 1.00 A	0.50 A	Current Balance Monitor Meas. Loc. 4
		5A	0.50 .. 5.00 A	2.50 A	
8142	BAL. FACT. I M4		0.10 .. 0.90	0.50	Bal. Factor for Curr. Monitor Meas.Loc.4
8143A	T Sym. I th. M4		5 .. 100 sec	5 sec	Symmetry Iph: Pick-up delay
8151	BAL. I LIMIT M5	1A	0.10 .. 1.00 A	0.50 A	Current Balance Monitor Meas. Loc. 5
		5A	0.50 .. 5.00 A	2.50 A	
8152	BAL. FACT. I M5		0.10 .. 0.90	0.50	Bal. Factor for Curr. Monitor Meas.Loc.5
8153A	T Sym. I th. M5		5 .. 100 sec	5 sec	Symmetry Iph: Pick-up delay
8161	BALANCE U-LIMIT		10 .. 100 V	50 V	Voltage Threshold for Balance Monitoring
8162	BAL. FACTOR U		0.58 .. 0.90	0.75	Balance Factor for Voltage Monitor
8163A	T BAL. U LIMIT		5 .. 100 sec	5 sec	T Balance Factor for Voltage Monitor

2.19.1.6 Information List

No.	Information	Type of Information	Comments
161	Fail I Superv.	OUT	Failure: General Current Supervision
163	Fail I balance	OUT	Failure: Current Balance
164	Fail U Superv.	OUT	Failure: General Voltage Supervision
165	Fail Σ U Ph-E	OUT	Failure: Voltage Summation Phase-Earth
167	Fail U balance	OUT	Failure: Voltage Balance
171	Fail Ph. Seq.	OUT	Failure: Phase Sequence
175	Fail Ph. Seq. I	OUT	Failure: Phase Sequence Current
176	Fail Ph. Seq. U	OUT	Failure: Phase Sequence Voltage
30110	Fail balan. IM1	OUT	Fail.: Current Balance meas. location 1
30111	Fail balan. IM2	OUT	Fail.: Current Balance meas. location 2
30112	Fail balan. IM3	OUT	Fail.: Current Balance meas. location 3
30113	Fail balan. IM4	OUT	Fail.: Current Balance meas. location 4
30114	Fail balan. IM5	OUT	Fail.: Current Balance meas. location 5
30115	FailPh.Seq IM1	OUT	Failure: Phase Sequence I meas. loc. 1
30116	FailPh.Seq IM2	OUT	Failure: Phase Sequence I meas. loc. 2
30117	FailPh.Seq IM3	OUT	Failure: Phase Sequence I meas. loc. 3
30118	FailPh.Seq IM4	OUT	Failure: Phase Sequence I meas. loc. 4
30119	FailPh.Seq IM5	OUT	Failure: Phase Sequence I meas. loc. 5

2.19.2 Trip Circuit Supervision

The differential protection relay 7UT613/63x is equipped with an integrated trip circuit supervision. Depending on the number of binary inputs with isolated control inputs that are still available, a choice can be made between monitoring with one or two binary inputs. If the masking of the required binary inputs does not match the selected monitoring type, then a message to this effect is generated („`TripC ProgFail`“).

2.19.2.1 Function Description

Supervision Using Two Binary Inputs

If two binary inputs are used, they are connected according to figure 2-117, one in parallel to the assigned command relay contact of the protection and the other parallel to the circuit breaker auxiliary contact.

A precondition for the use of the trip circuit supervision is that the control voltage for the circuit breaker is higher than the total of the minimum voltages drops at the two binary inputs ($U_{Ctrl} > 2 \cdot U_{BImin}$). Since at least 19 V are needed for each binary input, the supervision function can only be used with a system control voltage of more than 38 V.

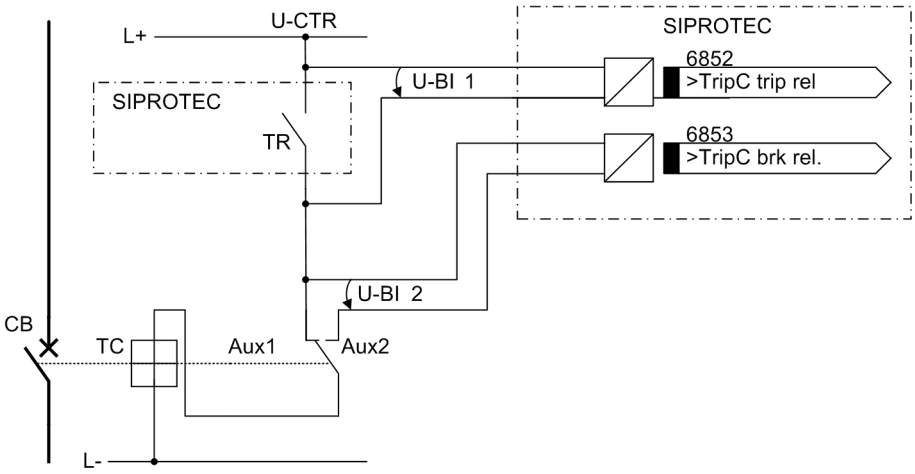

Figure 2-117 Principle of trip circuit supervision using two binary inputs

TR Trip relay contact

CB Circuit breaker

TC Circuit breaker trip coil

Aux1 Circuit breaker auxiliary contact (make)

Aux2 Circuit breaker auxiliary contact (break)

U_{Ft} Control voltage (trip voltage)

U_{BI1} Input voltage of 1st binary input

U_{BI2} Input voltage of 2nd binary input

The diagram shows the circuit breaker in closed state.

Depending on the state of the trip relay and the circuit breaker s auxiliary contacts, the binary inputs are triggered (logical state „H“ in the following table) or short-circuited (logical state and „L“).

The state where both binary inputs are not activated („L“), is only possible during a short transition phase in intact trip circuits (command relay has issued trip command, but the CB has not yet opened).

A continuous state of this condition is only possible when the trip circuit has been interrupted, a short-circuit exists in the trip circuit, or battery voltage failure occurs. It is thus used as a monitoring criterion.

Table 2-11 Status table of the binary inputs depending on command relay and circuit breaker switching state

No.	Trip relay contact	Circuit breaker	Aux.1	Aux.2	BI 1	BI 2
1	Open	ON	Closed	Open	H	L
2	Open	OFF	Open	Closed	H	H
3	Closed	ON	Closed	Open	L	L
4	Closed	OFF	Open	Closed	L	H

The conditions of the two binary inputs are checked periodically. A query takes place about every 500 ms. Only after n = 3 of these consecutive state queries have detected a fault, an alarm is given. The repeated measurements determine the delay of the alarm message and avoid that an alarm is output during short transition periods. After the fault in the trip circuit is removed, the alarm is reset automatically after the same time.

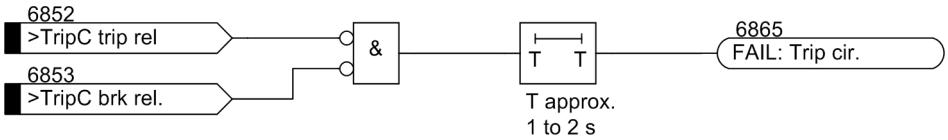

Figure 2-118 Logic Diagram of the Trip Circuit Supervision with Two Binary Inputs (simplified)

Supervision Using One Binary Input

The binary input is connected in parallel to the respective command relay contact of the protection device according to figure 2-119. The circuit breaker auxiliary contact is bridged with the help of a high-ohmic substitute resistor R.

The control voltage for the circuit breaker should be at least double the size of the minimum voltage drops at the binary input ($U_{Ctrl} > 2 \cdot U_{BImin}$). Since at least 19 V are needed for the binary input, the monitor can be used with a system control voltage of over 38 V.

An calculation example for the substitute resistance of R is shown in the subsection „Installation and Commissioning“.

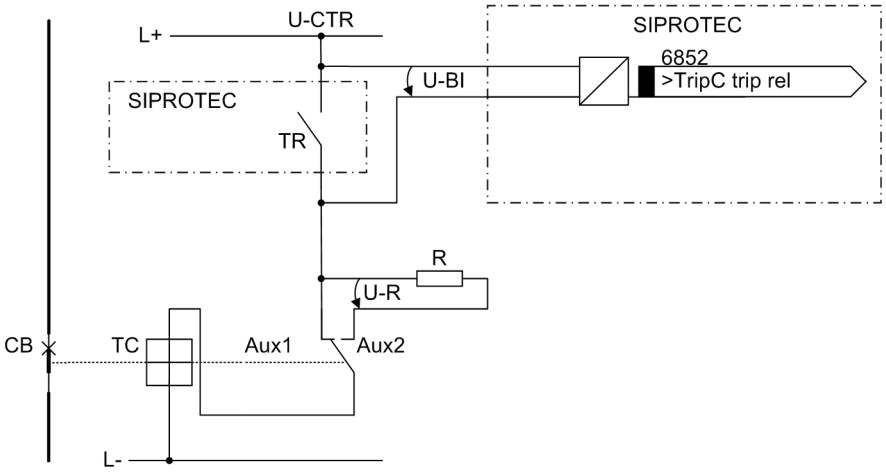

Figure 2-119 Logic diagram of the trip circuit supervision using one binary input

TR Trip relay contact

CB Circuit breaker

TC Circuit breaker trip coil

Aux1 Circuit breaker auxiliary contact (make)

Aux2 Circuit breaker auxiliary contact (break)

U_{Ft} Control voltage (trip voltage)

U_{BI} Input voltage of binary input

U_R Voltage across the substitute resistor

R Bypass resistor

During normal operation, the binary input is activated (logical condition „H“) when the trip contact is open and the trip circuit is intact, because the supervision circuit is closed either by the circuit breaker auxiliary contact (if the circuit breaker is closed) or through the equivalent resistor R. Only as long as the trip contact of the command relay is closed, the binary input is short-circuited and thereby deactivated (logical condition „L“).

If the binary input is permanently deactivated during operation, an interruption in the trip circuit or a failure of the (trip) control voltage can be assumed.

The trip circuit supervision does not operate during system faults. A momentary closed tripping contact does not lead to a failure indication. If, however, the trip contacts of other devices are connected in parallel, the alarm must be delayed.

When the fault in the trip circuit has been cleared, the annunciation is automatically reset.

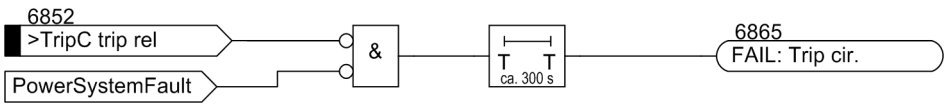

Figure 2-120 Logic Diagram of the Trip Circuit Supervision with One Binary Input (simplified)

2.19.2.2 Setting Notes

During configuration of the scope of functions, the number of binary inputs per trip circuit was set at address 182 **Trip Cir. Sup.** (see 2.1.3.1).

If the allocation of the required binary inputs does not match the selected monitoring mode, a message to that effect appears („TripC ProgFail“).

The trip circuit supervision can be switched at address 8201 **TRIP Circuit Supervision** ***ON*** or ***OFF***.

2.19.2.3 Settings

Addr.	Parameter	Setting Options	Default Setting	Comments
8201	TRIP Cir. SUP.	ON OFF	OFF	TRIP Circuit Supervision

2.19.2.4 Information List

No.	Information	Type of Information	Comments
6851	>BLOCK TripC	SP	>BLOCK Trip circuit supervision
6852	>TripC trip rel	SP	>Trip circuit supervision: trip relay
6853	>TripC brk rel.	SP	>Trip circuit supervision: breaker relay
6861	TripC OFF	OUT	Trip circuit supervision OFF
6862	TripC BLOCKED	OUT	Trip circuit supervision is BLOCKED
6863	TripC ACTIVE	OUT	Trip circuit supervision is ACTIVE
6864	TripC ProgFail	OUT	Trip Circuit blk. Bin. input is not set
6865	FAIL: Trip cir.	OUT	Failure Trip Circuit

2.19.3 Malfunction Responses of the Device

Depending on the type of malfunction discovered, an alarm is given, a restart of the processor system is initiated, or the device is taken out of service. If the fault is still present after three restart attempts the protection system will take itself out of service and indicate this condition by drop-off of the “Device OK” relay, thus indicating the device failure. The red LED „ERROR“ on the device front lights up, provided that there is an internal auxiliary voltage, and the green LED „RUN“ goes off. If the internal auxiliary voltage supply fails, all LEDs are dark. The following table shows a summary of the most important monitoring functions and the fault reactions of the device.

2.19.3.1 Summary of the most important Monitoring Functions

Supervision	Possible Causes	Fault Reaction	Alarm	Output
Auxiliary voltage failure	External (aux. voltage) Internal (converter)	Device out of operation or alarm, if necessary	All LEDs dark	DOK[2]) drops out
Measured value acquisition	Internal (converter or sampling)	Protection out of operation, alarm	LED „ERROR“ „Error MeasurSys“	DOK[2]) drops out
	Internal (offset)	Protection out of operation, alarm	LED „ERROR“ „Error Offset“	DOK[2]) drops out
Hardware watchdog	Internal (processor failure)	Device out of operation	LED „ERROR“	DOK[2]) drops out
Software watchdog	Internal (program flow)	Restart attempt [1)]	LED „ERROR“	DOK[2]) drops out
Working memory	Internal (RAM)	Restart attempt[1)], restart aborted device out of operation	LED flashes	DOK[2]) drops out
Program memory	Internal (EPROM)	Restart attempt [1)]	LED „ERROR“	DOK[2]) drops out
Parameter memory	Internal (EEPROM or RAM)	Restart attempt [1)]	LED „ERROR“	DOK[2]) drops out
1 A/5 A/0.1 A setting	Jumper setting 1/5/0.1 A wrong	Alarms, Protection out of operation	„Error1A/5Awrong“ LED „ERROR“	DOK[2]) drops out
Calibration data	internal (device not calibrated)	Alarm, Using default values	„Alarm adjustm.“	as allocated
Backup battery	Internal (backup battery)	Alarm	„Fail Battery“	as allocated
Clock	Time synchronization	Alarm	„Clock SyncError“	as allocated
P.C.B. modules	Module does not comply with ordering number	Alarms, Protection out of operation	„Error Board 0“ ... „Error Board 7“ and if necessary „Error MeasurSys“	DOK[2]) drops out
interfaces	faulty interface	Message	„Err. Module B“ ... „Err. Module D“	as allocated
RTD box connection	RTD box not connected or number does not match	No overload protection; Alarm	„Fail: RTD-Box 1“ or „Fail: RTD-Box 2“	as allocated
Current balance	External (system or current transformers)	Alarm with identification of the measuring location	„Fail balan. IM1“ or „Fail balan. IM2“ „Fail I balance“	as allocated
Voltage sum	internal Measured value acquisition	Message	„Fail Σ U Ph-E“	as allocated
Voltage balance	external (system or voltage transformer	Message	„Fail U balance“	as allocated
Phase sequence	External (system or connections)	Alarm with identification of the measuring location	„FailPh.Seq IM1“ ... „FailPh.Seq IM5“ „Fail Ph. Seq. I“ „Fail Ph. Seq. U“	as allocated

Supervision	Possible Causes	Fault Reaction	Alarm	Output
Broken wire	external (current transformer secondary circuit)	All respective protection functions are blocked	„brk. wire IL1M1“ „brk. wire IL2M1“ „brk. wire IL3M1“ ... „brk. wire IL1M5“ „brk. wire IL3M5“ „brk. wire IL3M5“	as allocated
Circuit Breaker	Circuit breaker tripping	Alarm with identification of the measuring location/side	„Incons.CBaux M1“ ... „Incons.CBaux M5“ or „Incons.CBaux S1“ ... „Incons.CBaux S5“	as allocated
EN100–Module	external wiring/ EN100–Module	Message	„Fail Ch1“ „Fail Ch2“ or „Failure Modul“	as allocated
CFC	Internal	Message	„Distur.CFC“	as allocated
Fuse Failure Monitor (asymmetrical and symmetrical)	External (voltage transformer secondary circuit)	Blocked message of dependent undervoltage function.	"Fuse Failure"	as allocated
Trip circuit supervision	External (trip circuit or control voltage)	Message	„FAIL: Trip cir.“	as allocated
[1] After three unsuccessful attempts, the device is put out of operation [2] DOK = „"Device OK“ relay („life contact“)				

2.19.4 Parameterisation Error

Changes made in settings during allocation of binary inputs and outputs or during assignment of measuring inputs, may lead to inconsistencies endangering proper operation of protective and supplementary functions.

The device 7UT613/63x controls the settings for consistency and announces any inconsistent settings. For instance, earth fault differential protection cannot be applied if there is no measuring input for the starpoint current between starpoint of the protected object and the earthing electrode.

These inconsistencies are output with the operational and spontaneous annunciations.

2.20 Protection Function Control

The function logic coordinates the sequence of both the protective and ancillary functions, processes the functional decisions, and data received from the system.

2.20.1 Pickup Logic for the Entire Device

2.20.1.1 General Device Pickup

The fault detection logic combines the pickup signals of all protection functions. The pickup signals are combined with OR and lead to a general pickup of the device. It is signalled with the alarm „Relay PICKUP“. If a protection function of the device is not picked up any longer, „Relay PICKUP“ disappears (indication „functioning“).

General fault detection is a requirement for a series of internal and external subsequent functions.

Among these functions, which are controlled by the general pickup, are:

- Start of a fault log: All fault messages are entered into the trip log from the beginning of the general pickup to the dropout.
- Initialization of the fault recording: The recording and storage of fault wave forms can additionally be made subject to the presence of a trip command.
- Creation of spontaneous displays: Certain fault messages can be displayed as so-called spontaneous displays. This display can be made dependent on occurrence of a trip command.
- External functions can be controlled via an output contact. Examples are: starting of additional devices, or similar.

Spontaneous Displays

Spontaneous indications are fault indications which appear in the display automatically following a general fault detection or trip command of the device. For 7UT613/63x, these indications include:

- „Relay PICKUP“: the pickup of a protection function with phase indication;
- „Relay TRIP“: trip of any protection function;
- „PU Time“: = running time from general device pickup to dropout of the device, in ms;
- „Trip time“: = the operating time from the general pickup to the first trip command of the device, the time is given in ms.

Please note that the overload protection does not have a pickup in comparison to the other protective functions. The general device pickup time (PU Time) is started with the trip signal, which starts the trip log. The dropout of the thermal image of the overload protection ends the fault case and, thereby the running PU Time.

2.20.2 Tripping Logic for the Entire Device

2.20.2.1 General Tripping

All tripping signals of the protection functions are OR–combined and lead to the alarm „Relay TRIP“. This can be allocated to an LED or output relay as can be each of the individual trip commands. It is suitable as general trip information as well as used for the output of trip commands to the circuit breaker.

Once a trip command is activated, it is stored separately for each protection function. At the same time a minimum trip command duration **TMin TRIP CMD** is started to ensure that the command is sent to the circuit breaker long enough if the tripping protection function should drop off too quickly or if the breaker of the feeding end operates faster. The trip commands cannot be terminated until the last protection function has dropped off (no function activated) AND the minimum trip command duration is over.

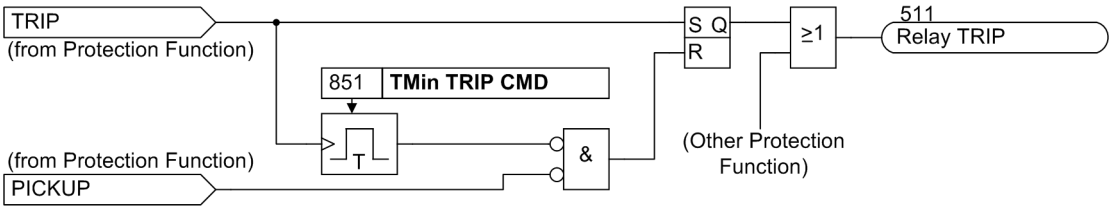

Figure 2-121 Storage and termination of the trip command (simplified)

Reclosure Interlocking

After tripping the circuit breaker by a protection function the manual reclosure must often be blocked until the cause for the protection operation is found.

Using the user-configurable logic functions (CFC) an automatic reclosure interlocking function can be created. The default setting of 7UT613/63x offers a pre-defined CFC logic which stores the trip command of the device until the command is acknowledged manually. The CFC block is illustrated in the Appendix under „Preset CFC Charts“. The internal output „G-TRP Quit“ must be additionally assigned to the tripping output relays which are to be sealed.

Acknowledgement is done via binary input „>QuitG-TRP“. With default configuration, press function key F4 at the device front to acknowledge the stored trip command.

If the reclosure interlocking function is not required, delete the allocation between the internal single-point indication „G-TRP Quit“ and the source „CFC“ in the configuration matrix.

Note

The internal single-point indication „G-TRP Quit“ is not affected by the setting option ***Block relay*** of the protection functions. If this indication is allocated to a trip relay, this relay will be actuated in case of a trip of the protection functions, even if ***Block relay*** is set for that function.

“No Trip no Flag”

The recording of indications masked to local LEDs, and the maintenance of spontaneous indications, can be made dependent on whether the device has issued a trip command. Fault event information is then not output when one or more protection functions have picked up due to a fault but no tripping of the 7UT613/63x resulted because the fault was removed by another device (e.g. on a different feeder). The information is thus limited to faults on the protected line (so-called “no trip – no flag” feature).

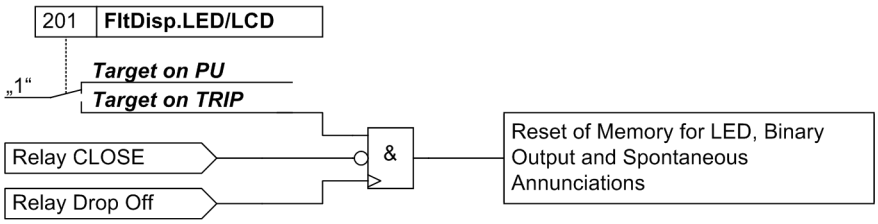

Figure 2-122 Logic diagram of the no–trip–no–flag feature (trip-dependent alarms)

Statistical Counters

The number of trips initiated by the device 7UT613/63x are counted.

Furthermore, the current interrupted for each pole and each measuring location is acquired, provided as an information and accumulated in a memory. The criterion for the acquisition and accumulation of the current levels is that a trip command has been output by any protection function.

The counter and memory levels are secured against loss of auxiliary voltage. They can be set to zero or to any other initial value. For further information please refer to the SIPROTEC 4 System Description.

2.21 Disconnection of Measuring Locations

2.21.1 Functional Description

During maintenance work, or when parts of the system are shut down during operation, it is sometimes necessary to suspend the processing of individual measuring locations by the differential protection system. For maintenance work on the circuit breaker **CBC** in Figure 2-123, for instance, the breaker would be isolated by opening the adjacent isolators.

The main protected object transformer is in this example fed on side **S1** through measuring locations**M1** and **M2**, on side **S2** lies the measuring location **M3**. Assuming the measuring location **M2** should now be suspended due to the maintenance work on the circuit breaker. If this information is sent to the device through a binary input — in this case „`>disconnect M2`“ –, the measuring location will no longer be included in the formation of the differential protection values. The measuring location is disconnected, i.e. any kind of work can be performed there without affecting any operating function of the sides, for example, the differential protection.

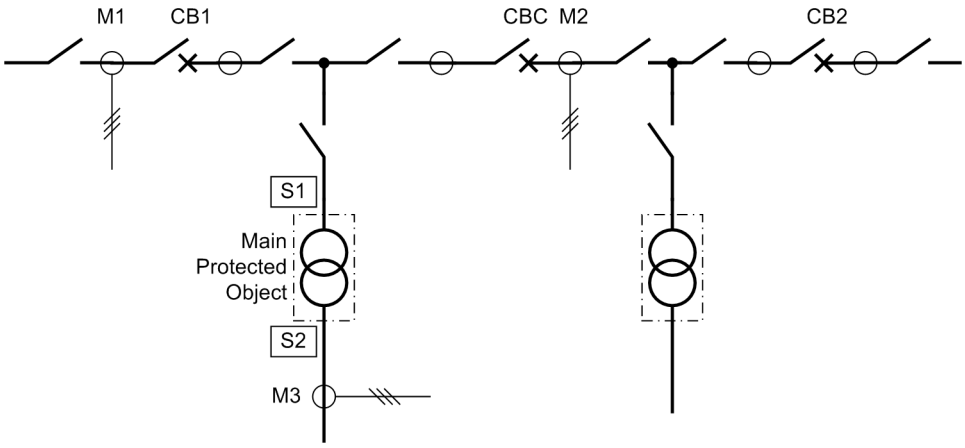

Figure 2-123 Arrangement with $1^1/_2$ circuit breakers (3 breakers for 2 transformer feeders)

Any measuring location can be disconnected by means of an appropriate binary input. In 1-phase busbar protection, such a binary input can be used for each feeder.

The disconnection works only in the specified frequency range of the protection, i.e. f_N = 50/60 Hz from 10 to 66 Hz and for f_N = 16.7 Hz from 10 to 22 Hz. If the current criterion is disabled via binary input „`>disconn. I>=0`“, the specified frequency range is also not applicable. The activation is thus not suited for blocking the protection during startup of a machine. Instead, the blocking features provided in the protection functions must be used.

The isolation becomes effective only if no current is flowing through the measuring location to be isolated. This is ensured by checking whether the current arriving from the measuring location has dropped below the threshold **`PoleOpenCurr.M1`**, **`PoleOpenCurr.M2`** to **`PoleOpenCurr.M5`** of the measuring location. Once the disconnection has become effective, this fact is reported by a binary input, e.g. with the indication „`M2 disconnected`“. The current threshold is no longer checked from then on.

The disconnection ends when the binary input is deactivated. This requires, once again, that no current is flowing at the moment the disconnection is ended.

One can evade the condition that the disconnection mode can only be started or ended when no current is flowing via the measuring location. If you wish to start and end the disconnection mode even in case of current flow, you have to activate — together with the corresponding binary input („>disconnect Mx“) — the input „>disconn. I>=0“ (30361). This can be done by means of a logical CFC-combination.

The effectiveness of the disconnection is stored in the device's NV RAM and saved against auxiliary voltage failure, i.e. the last information about the disconnection state is maintained when the power supply of the device fails. When the power supply returns, the state of the binary input(s) for disconnection is checked against the stored information. Only when they match will the protection functions become active again. Inconsistencies are indicated as an alarm „Fail.Disconnect“ (FNo 30145), and the life contact of the relay remains open. The device cannot operate again until the state of the binary input(s) has been adapted to the stored information.

The effect of the disconnection is that the currents from the disconnected measuring location — as far as they are assigned to a side of the main protected object — are set to zero for those protection functions that are assigned to this side. Currents arriving from the system after disconnecting the measuring location are not effective here. The currents from 1-phase auxiliary measuring inputs allocated to the isolated measuring input stay valid. Currents remain valid for those protection functions which are not assigned to a side.

No protection functions are blocked. The differential protection continues to work with the remaining available measured values. In the above example, the transformer can still operate through measuring location M1, with the differential protection remaining fully effective.

Overcurrent protection functions assigned to a side continue to work without the current from the disconnected measuring location.

Overcurrent protection functions which are assigned exclusively to the disconnected measuring location (i.e. not via a side definition) are supplied with the currents of the disconnected measuring location, i.e. continue to operate with these currents. If necessary, they must be blocked by the information about disconnection (either by corresponding assignment in the matrix of binary inputs or by user defined logical combination by means of CFC).

The restricted earth fault protection, too, does not receive any more currents from the isolated measuring location. If it is assigned to a side with two or more measuring locations, it can continue to work with the currents from the remaining measuring location(s). If the isolated measuring location is the only 3-phase source for the restricted earth fault protection, the starpoint current stays effective. This means that the restricted earth fault protection will trip immediately if the starpoint current exceeds the pickup threshold. Such a current must be a fault current in the protected object: it cannot come from the power system, which is in fact isolated from the protected object.

2.21.2 Information List

No.	Information	Type of Information	Comments
30080	M1 disconnected	OUT	Measurment location 1 is disconnected
30081	M2 disconnected	OUT	Measurment location 2 is disconnected
30082	M3 disconnected	OUT	Measurment location 3 is disconnected
30083	M4 disconnected	OUT	Measurment location 4 is disconnected
30084	M5 disconnected	OUT	Measurment location 5 is disconnected
30085	I1 disconnected	OUT	End 1 is disconnected
30086	I2 disconnected	OUT	End 2 is disconnected
30087	I3 disconnected	OUT	End 3 is disconnected
30088	I4 disconnected	OUT	End 4 is disconnected
30089	I5 disconnected	OUT	End 5 is disconnected
30090	I6 disconnected	OUT	End 6 is disconnected
30091	I7 disconnected	OUT	End 7 is disconnected
30092	I8 disconnected	OUT	End 8 is disconnected
30093	I9 disconnected	OUT	End 9 is disconnected
30094	I10disconnected	OUT	End 10 is disconnected
30095	I11disconnected	OUT	End 11 is disconnected
30096	I12disconnected	OUT	End 12 is disconnected
30361	>disconn. I>=0	SP	>disconnect without test: current = 0
30362	>disconnect M1	SP	>disconnect measurment location 1
30363	>disconnect M2	SP	>disconnect measurment location 2
30364	>disconnect M3	SP	>disconnect measurment location 3
30365	>disconnect M4	SP	>disconnect measurment location 4
30366	>disconnect M5	SP	>disconnect measurment location 5
30367	>disconnect I1	SP	>disconnect end 1
30368	>disconnect I2	SP	>disconnect end 2
30369	>disconnect I3	SP	>disconnect end 3
30370	>disconnect I4	SP	>disconnect end 4
30371	>disconnect I5	SP	>disconnect end 5
30372	>disconnect I6	SP	>disconnect end 6
30373	>disconnect I7	SP	>disconnect end 7
30374	>disconnect I8	SP	>disconnect end 8
30375	>disconnect I9	SP	>disconnect end 9
30376	>disconnect I10	SP	>disconnect end 10
30377	>disconnect I11	SP	>disconnect end 11
30378	>disconnect I12	SP	>disconnect end 12

2.22 Additional Functions

The additional functions of the 7UT613/63x differential protection relay include:

- processing of messages,
- processing of operational measured values,
- storage of fault record data.

2.22.1 Processing of Messages

2.22.1.1 General

For a detailed fault analysis, information regarding the reaction of the protection device and the measured values following a system fault are of interest. For this purpose, the device provides information processing which operates in a threefold manner:

Indicators and Binary Outputs (Output Relays)

Important events and states are displayed by LEDs on the front cover. The relay also contains output relays for remote signaling. Most indications and displays can be configured differently from the delivery default settings (for information on the delivery default setting see Appendix). The SIPROTEC 4 System Description gives a detailed description of the configuration procedure.

The output relays and the LEDs may be operated in a latched or unlatched mode (each may be individually set).

The latched conditions are protected against loss of the auxiliary voltage. They are reset

- On site by pressing the LED key on the relay,
- Remotely using a binary input configured for that purpose,
- Using one of the serial interfaces,
- Automatically at the beginning of a new pickup.

Status messages should not be latched. Also, they cannot be reset until the condition to be reported has been cancelled. This applies to, e.g. indications from monitoring functions, or the like.

A green LED displays operational readiness of the relay („RUN“), and cannot be reset. It goes out if the self-check feature of the microprocessor recognizes an abnormal occurrence, or if the auxiliary voltage fails.

When auxiliary voltage is present but the relay has an internal malfunction, the red LED („ERROR“) lights up and the processor blocks the relay.

DIGSI enables you to control selectively each output relay and LED of the device and, in doing so, check the correct connection to the system. In a dialog box you can, for instance, cause each output relay to pick up, and thus test the wiring between the 7UT613/63x and the station, without having to create the indications masked to it.

Information on the Integrated Display (LCD) or to a Personal Computer

Events and conditions can be read out on the display on the front panel of the relay. Using the front operator interface or the rear service interface, for instance, a personal computer can be connected, to which the information can be sent.

In the quiescent state, i.e. as long as no system fault is present, the LCD can display selectable operational information (overview of the operational measured values) (default display). In the event of a system fault, information regarding the fault, the so-called spontaneous displays, are displayed instead. After the fault indications have been acknowledged, the quiescent data are shown again. Acknowledgement can be performed by pressing the LED buttons on the front panel (see above).

The device in addition has several event buffers for operational annunciations, switching statistics, etc., which are saved against loss of auxiliary supply by means of a backup battery. These messages can be displayed on the LCD at any time by keypad selection, or transferred to the PC via the serial service interface. Readout of indications during operation is described in detail in the SIPROTEC 4 System Description.

With a PC and the DIGSI protection data processing software it is also possible to retrieve and display the events and visualised on a monitor and menu-guided dialogue. The data may either be printed, or stored at another location, and then be evaluated.

Information to a Control Centre

If the device has a serial system interface, stored information may additionally be transferred via this interface to a centralized control and storage device. Several communication protocols are available for the transfer of this information.

You may test whether the indications are transmitted correctly with DIGSI.

Also the information transmitted to the control centre can be influenced during operation or tests. The IEC 60870-5-103 protocol allows to identify all indications and measured values transferred to the central control system with an added indication „test mode“ while the device is being tested on site (test mode). This identification prevents the indications from being incorrectly interpreted as resulting from an actual power system disturbance or event. Alternatively, you may disable the transmission of indications to the system interface during tests („Transmission Block“).

To influence information at the system interface during test mode („test mode“ and „transmission block“), a CFC logic is required. Default settings already include this logic (see Appendix).

The SIPROTEC 4 System Description describes in detail how to activate and deactivate test mode and blocked data transmission.

Classification of Indications

The messages are categorized as follows:

- Event Log: These are annunciations that may be generated during operation of the device: Information regarding the status of device functions, measured data, power system data, control command logs, etc.
- Trip Log: These are fault messages from the last eight network faults that were processed by the device.
- Messages in switching statistics: These messages count the breaker control commands initiated by the device, values of accumulated circuit currents and interrupted currents.
- Resetting/setting of the above messages.

A complete list of all indication and output functions that can be generated by the device with the maximum functional scope can be found in the Appendix. All functions are associated with an information number. There it is also indicated to which destination the annunciation can be reported. If functions are not present in the specific device version , or if they are set to disable, then the associated indications cannot appear.

2.22.1.2 Operational Annunciations (Buffer: Event Log)

The operational annunciations contain information that the device generates during operation and on operational conditions.

Up to 200 operational annunciations are stored in chronological order in the device. New annunciations are added at the end of the list. If the memory has been exceeded, the oldest annunciation is overwritten for each new message.

Operational annunciations come in automatically and can be read out from the device display or a personal computer. Faults in the power system are indicated with „Network Fault“ and the present fault number. The fault annunciations (Trip Log) contain details about the history of faults.

2.22.1.3 Fault Annunciations (Buffer: Trip Log)

Following a system fault, it is possible, for example, to retrieve important information regarding its progress, such as pickup and trip. The time the initial occurrence of the short circuit fault occurred is accurately provided via the system clock. The progress of the disturbance is output with a relative time referred to the instant of fault detection (first pickup of a protection function), so that the duration of a fault until tripping and up to reset of the trip command can be ascertained. The tripping of the time entry is about 1 ms.

A system fault starts with the recognition of the fault by the fault detection, i.e. first pickup of any protection function, and ends with the reset of the fault detection, i.e. dropout of the last protection function. Where fault causes several protective functions to pick up, the fault is considered to include all that occurred between pickup of the first protection function and dropout of the last protection function.

Spontaneous Displays

After a fault, the device displays automatically and without any operator action on its LCD display the most important fault data in the sequence 2-124 shown in the following figure.

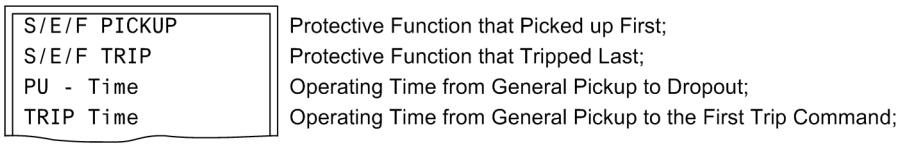

Figure 2-124 Display of spontaneous messages in the display – example

Retrieved Annunciations

The annunciations of the last eight network faults can be retrieved and output. Altogether up to 600 annunciations can be stored. New annunciations are added at the end of the list. If the memory has been exceeded, the oldest annunciation is overwritten for each new message.

2.22.1.4 Spontaneous Annunciations

Spontaneous indications contain information on new incoming indication. Each new incoming annunciation appears immediately, i.e. the user does not have to wait for an

update or initiate one. This can be useful help during operation, testing and commissioning.

Spontaneous indications can be read out via DIGSI. For more information see the SIPROTEC 4 System Description.

2.22.1.5 General Interrogation

The present condition of a SIPROTEC 4 device can be examined with DIGSI by viewing the contents of the General Interrogation. All of the annunciations that are needed for a general interrogation are shown along with the actual values or states.

2.22.1.6 Switching Statistics

The function counts the number of trips initiated by the device, determines and signals the interrupted current for each trip command, and stores a summated value of the current.

The messages in switching statistics are counters for the accumulation of interrupted currents by each of the breaker poles, the number of control commands issued by the device to the breakers. The interrupted currents are in primary terms.

The counters and memories of the statistics are saved by the device. Therefore the information will not get lost in case the auxiliary voltage supply fails. The counters, however, can be reset back to zero or to any value within the setting range.

They can be called up at the front of the device, read out via the operating interface using a PC with DIGSI, or transferred to a central master station via the system interface.

A password is not required to read switching statistics; however, a password is required to change or delete the statistics.

2.22.2 Measurement

2.22.2.1 Display and Transmission of Measured Valuables

Operational measured and metered values are determined in the background by the processor system. They can be called up at the front of the device, read out via the operating interface using a PC with DIGSI, or transferred to a central master station via the system interface.

The computation of the operational measured values is also executed during an existent system fault in intervals of approx. 0.6 s.

Next to the measured values that can be acquired directly at the device's measuring inputs, the device calculates a wide range of other values. Many measured values are calculated from the measured quantities and referenced to the application. The device can flexibly adapt to various protective objects with varying topologies; this picks up a flexible adaptation of an operational measured values output. Only operational values appear that result from the connected measured quantities and that make sense of the configured cases.

A correct display of primary and percentage values requires the complete and correct entry of the topology of the protected object and its rated values, as well as of the transformer ratings.

For the measuring locations the primary and secondary measured values as per Table 2-12 are issued. Depending on the device's order number, connection type, topology and protection functions configured, only a part of the magnitudes listed there is available. For single-phase transformers all phase sizes are missing L2.

The powers S, P, Q are calculated from the measuring location to which the voltage transformers are assigned. If the voltage transformers are assigned to a side of the main protected object, the current sum applies, if the side has two or more measuring locations. With single-phase busbar protection, power calculation is not possible.

The definition of the signs is normally that the power flowing into the protective object is considered as positive: Active components and inductive reactive components in the direction of the protective object are positive. The same applies for the power factor cos φ. It is occasionally desired to define the power draw from the protected object (e.g. as seen from the user side of the transformer) positively. Using parameter address 1107 **P,Q sign** the signs for these components can be inverted.

For devices without voltage measuring inputs a voltage and apparent power can be issued, if the voltage is connected to a one-phase current measuring input via an external series resistor. Via a user-configurable CFC logic (CFC block „Life_Zero“) the current proportional to the voltage can be measured and indicated as voltage „U_{meas}“. For more details on the procedure refer to the CFC manual.

The apparent power „S“ is not a measured value, but a value calculated from the rated voltage of the protected object which is set and the actually flowing currents of side 1: so

$$S = \frac{U_N}{\sqrt{3}} \cdot (I_{L1S1} + I_{L2S1} + I_{L3S1})$$

for three-phase application or

$$S = \frac{U_N}{2} \cdot (I_{L1S1} + I_{L3S1})$$

for single-phase transformers. If, however, the voltage measurement described in the previous paragraph is applied, this voltage measurement is used to calculate the apparent power with the currents of side 1. The apparent power is given as magnitude; it does not contain direction information.

Table 2-12 Operational measured values (magnitudes) of the measuring locations

Measured Values		Primary	Secondary	% referred to
IL1M1, IL2M1, IL3M1 IL1M2, IL2M2, IL3M2 IL1M3, IL2M3, IL3M3 [1]	Phase currents at the measuring locations M1 to M3 [1]	A; kA	R	Rated operational current of the assigned side; if the measuring location is not assigned, then 403..405 „I PRIMARY OP M3..5“
I1M1, I2M1, 3I0M1 I1M2, I2M2, 3I0M2 I1M3, I2M3, 3I0M3 [2]	Positive, negative and zero sequence component of the currents at the measuring locations M1 to M3 [2]	A; kA	R	
IL1M4, IL2M4, IL3M4 IL1M5, IL2M5, IL3M5 [1] [5]	Phase currents at the measuring locations M4 to M5 [1] [5]	A; kA	R	
I1M4, I2M4, 3I0M4 I1M5, I2M5, 3I0M5 [2] [5]	Positive, negative and zero sequence component of the currents at the measuring locations M4 to M5 [2] [5]	A; kA	R	
IZ1; IZ2; IZ3	Currents at the 1-phase further measuring locations X1 to X3	A; kA	R	- if allocated to side → see measured value „ILxSy“ - if allocated to measuring location → see measured value „ILxMz“ - if not allocated → then „IN-PRI WDL IZ1..4“
IX4 [5]	Current at the further measuring location X4 [5]	A; kA	R	
I1 to I9 [3]	Currents at the measuring inputs [3]	A; kA	R	Rated operational current
I10 to I12 [3] [5]	Currents at the measuring inputs [3] [5]	A; kA	R	Rated operational current
UL1E; UL2E; UL3E [1] [4]	Phase-to-earth voltages at the 3-phase voltage measuring location [1] [4]	V; kV; MV	V	Operational rated voltage/$\sqrt{3}$
UL12; UL23; UL31 [1] [4]	Phase-to-phase voltages at the 3-phase voltage measuring location [1] [4]	V; kV; MV	V	Operational rated voltage
U1; U2; U0 [2] [4]	Positive, negative and zero sequence component of the voltages at the 3-phase voltage measuring location [2] [4]	V; kV; MV	V	Operational rated voltage/$\sqrt{3}$
Uen [4]	Displacement voltage if connected to the 1-phase voltage measuring input [4]	—	V	Operational rated voltage
U4 [4]	Voltage at the 1-phase voltage measuring input [4]	V; kV; MV	V	Operational rated voltage
S, P, Q [1] [4]	Apparent, active and reactive power [1] [4]	MVA, MW, kVA; kW	—	Operational rated apparent power
f	Frequency	Hz	Hz	Rated frequency
cos φ [1] [4]	Power factor [1] [4]	(abs)	—	(abs)
Umeas [6]	Voltage from the current measured at the 1-phase measuring input [6]	V; kV; MV	—	—
S [7]	Apparent power [7]	kVA; MVA	—	—
U/f [4]	Overexcitation [4]	U_N/f_N	—	U_N/f_N

[1] only for 3-phase objects, also for single-phase transformers
[2] only for 3-phase objects, not for single-phase transformers
[3] only for single-phase busbar protection
[4] only for 7UT613 and 7UT633 with voltage measuring inputs
[5] only for 7UT635
[6] if configured and prepared in CFC
[7] calculated from phase currents and rated voltage or measured voltage U_{meas}

In addition to the measured and calculated values at the measuring locations, measured values are output at the sides of the main protected object. This makes if possible to obtain the data relevant for the protected object, even if they are fed to the protected object from several measuring locations, as for example the higher voltage side (S1) of the transformer. Also, relative values are always referred to a specific side of the protected object. A current which does not flow into the object from 2 measuring locations (e. g. a current flowing from one busbar through M1 and M2 to the other busbar) is theoretically zero because no current flows into the protected object.

Table 2-13 summarizes the operational measured values that are assigned to the sides. Depending on the device's order number, connection type, topology and protection functions configured, only a part of the magnitudes listed there is available. The table does not apply to the single-phase busbar protection, since no sides are defined there.

Table 2-13 Operational measured values (magnitudes) of the sides

Measured Values		Primary	Secondary	% referred to
IL1S1, IL2S1, IL3S1 IL1S2, IL2S2, IL3S2 IL1S3, IL2S3, IL3S3 [1]	Phase currents flowing in from the sides S1 to S3 [1]	A; kA	—	Rated operating current of the respective side
I1S1, I2S1, 3I0S1 I1S2, I2S2, 3I0S2 I1S3, I2S3, 3I0S3 [2]	Positive, negative and zero sequence component of the currents at the sides S1 to S3 [2]	A; kA	—	Rated operating current of the respective side
IL1S4, IL2S4, IL3S4 IL1S5, IL2S5, IL3S5 [1] [3]	Phase currents flowing in from the sides S4 to S5 [1] [3]	A; kA	—	Rated operating current of the respective side
I1S4, I2S4, 3I0S4 I1S5, I2S5, 3I0S5 [2] [3]	Positive, negative and zero sequence component of the currents at the sides S4 to S5 [2] [3]	A; kA	—	Rated operating current of the respective side

[1] only for 3-phase objects, also for single-phase transformers

[2] only for 3-phase objects, not for single-phase transformers

[3] only for 7UT635

The phase angles are listed separately in Table 2-14. The reference value for 3-phase objects is the current I_{L1M1} (current in phase L1 at measuring location M1), which has thus a phase angle = 0°. With 1-phase busbar protection, the current I_1 has the phase angle 0°, i.e. it is the reference value.

Depending on the device's order number, connection type, topology and protection functions configured, only a part of the phase angles listed there is available.

The phase angles are indicated in degrees. Since further processing of such values (in CFC or when transmitted through serial interfaces) requires values without dimension, arbitrary references have been chosen, which are contained in Table 2-14 in the column „% conversion".

Table 2-14 Operational measured values (phase relationship)

Measured Values		Dimension	% Conversion [6]
φIL1M1, φIL2M1, φIL3M1 φIL1M2, φIL2M2, φIL3M2 φIL1M3, φIL2M3, φIL3M3 [1]	Phase angle of the currents at the measuring locations M1 to M3, referred to I L1M1 [1]	°	0° = 0 % 360° = 100 %
φIL1M4, φIL2M4, φIL3M4 φIL1M5, φIL2M5, φIL3M5 [1] [5]	Phase angle of the currents at the measuring locations M1 to M3, referred to IL1M1 [1] [5]	°	0° = 0 % 360° = 100 %
φIZ1; φIZ2; φIZ3	Currents at the 1-phase further measuring locations Z1 to Z3, referred to IL1M13	°	0° = 0 % 360° = 100 %
φIZ4 [5]	Currents at the 1-phase auxiliary measuring location Z4, referred to IL1M1 [5]	°	0° = 0 % 360° = 100 %
φI1 to φI9 [3]	Phase angle of the currents at the current inputs, referred to I1[3]	°	0° = 0 % 360° = 100 %
φI10 to φI12 [3] [5]	Phase angle of the currents at the current inputs, referred to I1[3] [5]	°	0° = 0 % 360° = 100 %
φUL1E; φUL2E; φUL3E [1] [4]	Phase angle of the voltages at the 3-phase voltage measuring location, referred to IL1M1 or I1 [1] [4]	°	0° = 0 % 360° = 100 %
φUen [4]	Phase angle of the voltages at the 1-phase voltage measuring location, referred to IL1M1 or I1 [4]	°	0° = 0 % 360° = 100 %
φU4 [4]	Phase angle of the voltages at the 1-phase voltage measuring location, referred to IL1M1 or I1 [4]	°	0° = 0 % 360° = 100 %

[1] only for 3-phase objects, also for single-phase transformers
[2] only for 3-phase objects, not for single-phase transformers
[3] only for single-phase busbar protection
[4] only for 7UT613 and 7UT633 with voltage measuring inputs
[5] only for 7UT635
[6] only for CFC and serial interfaces

2.22.2.2 Settings

Addr.	Parameter	Setting Options	Default Setting	Comments
7601	POWER CALCUL.	with V setting with V measur.	with V setting	Calculation of Power

2.22.2.3 Information List

No.	Information	Type of Information	Comments
621	UL1E=	MV	U L1-E
622	UL2E=	MV	U L2-E
623	UL3E=	MV	U L3-E
624	UL12=	MV	U L12
625	UL23=	MV	U L23
626	UL31=	MV	U L31
627	UE =	MV	Displacement voltage UE
629	U1 =	MV	U1 (positive sequence)

No.	Information	Type of Information	Comments
630	U2 =	MV	U2 (negative sequence)
641	P =	MV	P (active power)
642	Q =	MV	Q (reactive power)
644	Freq=	MV	Frequency
645	S =	MV	S (apparent power)
721	IL1S1=	MV	Operat. meas. current IL1 side 1
722	IL2S1=	MV	Operat. meas. current IL2 side 1
723	IL3S1=	MV	Operat. meas. current IL3 side 1
724	IL1S2=	MV	Operat. meas. current IL1 side 2
725	IL2S2=	MV	Operat. meas. current IL2 side 2
726	IL3S2=	MV	Operat. meas. current IL3 side 2
727	IL1S3=	MV	Operat. meas. current IL1 side 3
728	IL2S3=	MV	Operat. meas. current IL2 side 3
729	IL3S3=	MV	Operat. meas. current IL3 side 3
765	U/f =	MV	(U/Un) / (f/fn)
901	PF =	MV	Power Factor
30633	φI1=	MV	Phase angle of current I1
30634	φI2=	MV	Phase angle of current I2
30635	φI3=	MV	Phase angle of current I3
30636	φI4=	MV	Phase angle of current I4
30637	φI5=	MV	Phase angle of current I5
30638	φI6=	MV	Phase angle of current I6
30639	φI7=	MV	Phase angle of current I7
30640	3I0S1=	MV	3I0 (zero sequence) of side 1
30641	I1S1=	MV	I1 (positive sequence) of side 1
30642	I2S1=	MV	I2 (negative sequence) of side 1
30643	3I0S2=	MV	3I0 (zero sequence) of side 2
30644	I1S2=	MV	I1 (positive sequence) of side 2
30645	I2S2=	MV	I2 (negative sequence) of side 2
30646	I1=	MV	Operat. meas. current I1
30647	I2=	MV	Operat. meas. current I2
30648	I3=	MV	Operat. meas. current I3
30649	I4=	MV	Operat. meas. current I4
30650	I5=	MV	Operat. meas. current I5
30651	I6=	MV	Operat. meas. current I6
30652	I7=	MV	Operat. meas. current I7
30653	I8=	MV	Operat. meas. current I8
30656	Umeas.=	MVU	Operat. meas. voltage Umeas.
30661	IL1M1=	MV	Operat. meas. current IL1 meas. loc. 1
30662	IL2M1=	MV	Operat. meas. current IL2 meas. loc. 1
30663	IL3M1=	MV	Operat. meas. current IL3 meas. loc. 1
30664	3I0M1=	MV	3I0 (zero sequence) of meas. loc. 1
30665	I1M1=	MV	I1 (positive sequence) of meas. loc. 1
30666	I2M1=	MV	I2 (negative sequence) of meas. loc. 1
30667	IL1M2=	MV	Operat. meas. current IL1 meas. loc. 2
30668	IL2M2=	MV	Operat. meas. current IL2 meas. loc. 2

No.	Information	Type of Information	Comments
30669	IL3M2=	MV	Operat. meas. current IL3 meas. loc. 2
30670	3I0M2=	MV	3I0 (zero sequence) of meas. loc. 2
30671	I1M2=	MV	I1 (positive sequence) of meas. loc. 2
30672	I2M2=	MV	I2 (negative sequence) of meas. loc. 2
30673	IL1M3=	MV	Operat. meas. current IL1 meas. loc. 3
30674	IL2M3=	MV	Operat. meas. current IL2 meas. loc. 3
30675	IL3M3=	MV	Operat. meas. current IL3 meas. loc. 3
30676	3I0M3=	MV	3I0 (zero sequence) of meas. loc. 3
30677	I1M3=	MV	I1 (positive sequence) of meas. loc. 3
30678	I2M3=	MV	I2 (negative sequence) of meas. loc. 3
30679	IL1M4=	MV	Operat. meas. current IL1 meas. loc. 4
30680	IL2M4=	MV	Operat. meas. current IL2 meas. loc. 4
30681	IL3M4=	MV	Operat. meas. current IL3 meas. loc. 4
30682	3I0M4=	MV	3I0 (zero sequence) of meas. loc. 4
30683	I1M4=	MV	I1 (positive sequence) of meas. loc. 4
30684	I2M4=	MV	I2 (negative sequence) of meas. loc. 4
30685	IL1M5=	MV	Operat. meas. current IL1 meas. loc. 5
30686	IL2M5=	MV	Operat. meas. current IL2 meas. loc. 5
30687	IL3M5=	MV	Operat. meas. current IL3 meas. loc. 5
30688	3I0M5=	MV	3I0 (zero sequence) of meas. loc. 5
30689	I1M5=	MV	I1 (positive sequence) of meas. loc. 5
30690	I2M5=	MV	I2 (negative sequence) of meas. loc. 5
30713	3I0S3=	MV	3I0 (zero sequence) of side 3
30714	I1S3=	MV	I1 (positive sequence) of side 3
30715	I2S3=	MV	I2 (negative sequence) of side 3
30716	IL1S4=	MV	Operat. meas. current IL1 side 4
30717	IL2S4=	MV	Operat. meas. current IL2 side 4
30718	IL3S4=	MV	Operat. meas. current IL3 side 4
30719	3I0S4=	MV	3I0 (zero sequence) of side 4
30720	I1S4=	MV	I1 (positive sequence) of side 4
30721	I2S4=	MV	I2 (negative sequence) of side 4
30722	IL1S5=	MV	Operat. meas. current IL1 side 5
30723	IL2S5=	MV	Operat. meas. current IL2 side 5
30724	IL3S5=	MV	Operat. meas. current IL3 side 5
30725	3I0S5=	MV	3I0 (zero sequence) of side 5
30726	I1S5=	MV	I1 (positive sequence) of side 5
30727	I2S5=	MV	I2 (negative sequence) of side 5
30728	IX1=	MV	Operat. meas. auxiliary current IX1
30729	IX2=	MV	Operat. meas. auxiliary current IX2
30730	IX3=	MV	Operat. meas. auxiliary current IX3
30731	IX4=	MV	Operat. meas. auxiliary current IX4
30732	I9=	MV	Operat. meas. current I9
30733	I10=	MV	Operat. meas. current I10
30734	I11=	MV	Operat. meas. current I11
30735	I12=	MV	Operat. meas. current I12
30736	φIL1M1=	MV	Phase angle in phase IL1 meas. loc. 1

No.	Information	Type of Information	Comments
30737	φIL2M1=	MV	Phase angle in phase IL2 meas. loc. 1
30738	φIL3M1=	MV	Phase angle in phase IL3 meas. loc. 1
30739	φIL1M2=	MV	Phase angle in phase IL1 meas. loc. 2
30740	φIL2M2=	MV	Phase angle in phase IL2 meas. loc. 2
30741	φIL3M2=	MV	Phase angle in phase IL3 meas. loc. 2
30742	φIL1M3=	MV	Phase angle in phase IL1 meas. loc. 3
30743	φIL2M3=	MV	Phase angle in phase IL2 meas. loc. 3
30744	φIL3M3=	MV	Phase angle in phase IL3 meas. loc. 3
30745	φIL1M4=	MV	Phase angle in phase IL1 meas. loc. 4
30746	φIL2M4=	MV	Phase angle in phase IL2 meas. loc. 4
30747	φIL3M4=	MV	Phase angle in phase IL3 meas. loc. 4
30748	φIL1M5=	MV	Phase angle in phase IL1 meas. loc. 5
30749	φIL2M5=	MV	Phase angle in phase IL2 meas. loc. 5
30750	φIL3M5=	MV	Phase angle in phase IL3 meas. loc. 5
30751	φIX1=	MV	Phase angle in auxiliary current IX1
30752	φIX2=	MV	Phase angle in auxiliary current IX2
30753	φIX3=	MV	Phase angle in auxiliary current IX3
30754	φIX4=	MV	Phase angle in auxiliary current IX4
30755	φI8=	MV	Phase angle of current I8
30756	φI9=	MV	Phase angle of current I9
30757	φI10=	MV	Phase angle of current I10
30758	φI11=	MV	Phase angle of current I11
30759	φI12=	MV	Phase angle of current I12
30760	U4 =	MV	Operat. meas. voltage U4
30761	U0meas.=	MV	Operat. meas. voltage U0 measured
30762	U0calc.=	MV	Operat. meas. voltage U0 calculated
30792	φUL1E=	MV	Phase angle of voltage UL1E
30793	φUL2E=	MV	Phase angle of voltage UL2E
30794	φUL3E=	MV	Phase angle of voltage UL3E
30795	φU4=	MV	Phase angle of voltage U4
30796	φUE=	MV	Phase angle of voltage UE

2.22.3 Thermal Measurement

Depending on its configuration, the device can determine and display thermal measurement values.

2.22.3.1 Description

The measured thermal values are listed in table 2-15. They can only be displayed if the overload protection functions has been configured as ***Enabled***. Which measured values are possible also depends on the overload detection method chosen and, in certain cases, of the number of temperature detectors connected via the RTD-box.

The hot-spot temperatures are calculated in transformers for each leg. Therefore, temperatures are indicated with a phase (in the case of Y windings), or with a phase-

phase concatenation (D windings). For standard vector groups, this information correspond to the ends of the windings. In more unusual vector groups (which are created by phase swapping), the phase assignment in the vector group is not always clear.

The thermal values are referred to the tripping temperature rise. For degrees of temperature there are no referred values. However, since further processing of such values (in CFC or when transmitted through serial interfaces) requires values without dimension, arbitrary references have been chosen, which are contained in Table 2-15 in the column „% conversion“.

Table 2-15 Thermal Measured Values

Measured values		Dimension	% Conversion 4)
θ_{L1}/θ_{OFF}; θ_{L2}/θ_{OFF}; θ_{L3}/θ_{OFF} 1)	Thermal value of each phase, referred to the tripping value	%	
θ/θ_{Trip} 1)	Thermal resultant value, referred to the tripping value	%	
Ag.rate 2) 3)	Relative ageing rate L	p.u.	
Res Warn 2)3)	Load reserve to hot-spot/ageing alarm (stage 1)	%	
Res Alarm 2) 3)	Load reserve to hot-spot tripping (stage 1)	%	
θ leg L1; θ leg L2; θ leg L3 2) 3)	Hot-spot temperature for each phase (Y winding or Z winding)	°C or °F	0 °C = 0 % 500 °C = 100 % 0 °F = 0 % 1000 °F = 100 %
θ leg L12; θ leg L23; θ leg L31 2) 3)	Hot-spot temperature for each phase (D winding)	°C or °F	
θ RTD 1... θ RTD 12 3)	Temperature measured at the Temperature detectors 1 to 12	°C or °F	

1) only for overload protection with thermal replica (IEC 60255-8): Address 142 THERM. OVERLOAD = th repl w. sens
2) only for overload protection with hot-spot calculation (IEC 60354): Address 142 THERM. OVERLOAD = IEC354
3) only if RTD box(es) available
4) only for CFC and serial interfaces

2.22.3.2 Information List

No.	Information	Type of Information	Comments
044.2611	Θ/Θtrip =	MV	Temperat. rise for warning and trip
044.2612	Θ/ΘtripL1=	MV	Temperature rise for phase L1
044.2613	Θ/ΘtripL2=	MV	Temperature rise for phase L2
044.2614	Θ/ΘtripL3=	MV	Temperature rise for phase L3
044.2615	Θ leg L1=	MV	Hot spot temperature of leg L1
044.2616	Θ leg L2=	MV	Hot spot temperature of leg L2
044.2617	Θ leg L3=	MV	Hot spot temperature of leg L3
044.2618	Θ leg L12=	MV	Hot spot temperature of leg L12
044.2619	Θ leg L23=	MV	Hot spot temperature of leg L23
044.2620	Θ leg L31=	MV	Hot spot temperature of leg L31
044.2621	Ag.Rate=	MV	Aging Rate
044.2622	ResWARN=	MV	Load Reserve to warning level
044.2623	ResALARM=	MV	Load Reserve to alarm level
204.2611	2Θ/Θtrip =	MV	O/L2 Temperat. rise for warning and trip

No.	Information	Type of Information	Comments
204.2612	2Θ/ΘtrpL1=	MV	Th. O/L 2 Temperature rise for phase L1
204.2613	2Θ/ΘtrpL2=	MV	Th. O/L 2 Temperature rise for phase L2
204.2614	2Θ/ΘtrpL3=	MV	Th. O/L 2 Temperature rise for phase L3
204.2615	2Θ leg L1=	MV	Th. O/L 2 Hot spot temperature of leg L1
204.2616	2Θ leg L2=	MV	Th. O/L 2 Hot spot temperature of leg L2
204.2617	2Θ leg L3=	MV	Th. O/L 2 Hot spot temperature of leg L3
204.2618	2Θ legL12=	MV	Th. O/L2 Hot spot temperature of leg L12
204.2619	2Θ legL23=	MV	Th. O/L2 Hot spot temperature of leg L23
204.2620	2Θ legL31=	MV	Th. O/L2 Hot spot temperature of leg L31
204.2621	Ag.Rate2=	MV	Thermal Overload 2 Aging Rate
204.2622	ResWARN2=	MV	Th. O/L 2 Load Reserve to warning level
204.2623	ResALARM2=	MV	Th. O/L 2 Load Reserve to alarm level
766	U/f th. =	MV	Calculated temperature (U/f)
910	ThermRep.=	MV	Calculated rotor temp. (unbal. load)
1068	Θ RTD 1 =	MV	Temperature of RTD 1
1069	Θ RTD 2 =	MV	Temperature of RTD 2
1070	Θ RTD 3 =	MV	Temperature of RTD 3
1071	Θ RTD 4 =	MV	Temperature of RTD 4
1072	Θ RTD 5 =	MV	Temperature of RTD 5
1073	Θ RTD 6 =	MV	Temperature of RTD 6
1074	Θ RTD 7 =	MV	Temperature of RTD 7
1075	Θ RTD 8 =	MV	Temperature of RTD 8
1076	Θ RTD 9 =	MV	Temperature of RTD 9
1077	Θ RTD10 =	MV	Temperature of RTD10
1078	Θ RTD11 =	MV	Temperature of RTD11
1079	Θ RTD12 =	MV	Temperature of RTD12

2.22.4 Differential and Restraining Measured Values

Depending on its configuration, the device calculates the measured values that are specific to differential protection.

2.22.4.1 Function Description

The differential and restraining values of the differential protection and the restricted earth fault protection are listed in table 2-16. They always refer to the nominal current of the main protected object, which results from the parameterised nominal data of the main protected object (subsection 2.1.5). For multi-winding transformers with different winding ratings, the most powerful winding is decisive, for busbars and lines the nominal operation current as set for the protected object. In case of 1-phase busbar protection, only the values of the connected and declared phase are displayed.

In case of restricted earth fault protection, the nominal phase currents provide the reference value.

Table 2-16 Measured values of differential protection

Measured Values		% referred to
IDiffL1, IDiffL2, IDiffL3	Calculated differential currents of the three phases	Operational rated current of the protected object
IRESTL1, IRESTL2, IRESTL3	Calculated restraining currents of the three phases	Operational rated current of the protected object
IDiffREF	Calculated differential current of the restricted earth fault protection	Rated operational current of the side or 3-phase measuring location
IRestREF	Calculated restraint current of the restricted earth fault protection	Rated operational current of the side or 3-phase measuring location

2.22.4.2 Information List

No.	Information	Type of Information	Comments
199.2640	IdiffREF=	MV	Idiff REF (I/Inominal object [%])
199.2641	IrestREF=	MV	Irest REF (I/Inominal object [%])
205.2640	IdiffRE2=	MV	Idiff REF2 (I/Inominal object [%])
205.2641	IrestRE2=	MV	Irest REF2 (I/Inominal object [%])
7742	IDiffL1=	MV	IDiffL1(I/Inominal object [%])
7743	IDiffL2=	MV	IDiffL2(I/Inominal object [%])
7744	IDiffL3=	MV	IDiffL3(I/Inominal object [%])
7745	IRestL1=	MV	IRestL1(I/Inominal object [%])
7746	IRestL2=	MV	IRestL2(I/Inominal object [%])
7747	IRestL3=	MV	IRestL3(I/Inominal object [%])

2.22.5 Set Points for Measured Values

2.22.5.1 User Defined Set-Points

7UT613/63x allows limit levels for important measured and counter values to be set

If, during operation, a value reaches one of these set-points, the device generates an alarm which is indicated as an operational message. As for all operational messages, it is possible to output the information to LED and/or output relay and via the serial interfaces. Unlike real protection functions such as time overcurrent protection or overload protection, this supervision routine runs in the background, so that in the case of a fault and rapidly changing measured values it may not respond when protection functions pick up. Also, the supervision does not respond immediately before a trip because an alarm is only output if the setpoint are repeatedly violated.

Set-points can only be set if their measured and metered values have been configured correspondingly in CFC (see SIPROTEC 4 System Description /1/).

2.22.6 Energy Metering

Metered values for active and reactive power are determined in the background by the processor system. They can be called up at the front of the device, read out via the operating interface using a PC with DIGSI, or transferred to a central master station via the system interface.

2.22.6.1 Energy Metering

7UT613/63x integrates the calculated power which is then made available with the Measured Values. The components as listed in Table 2-17 can be read out. Note that „input“ and „output“ are always as seen from the protective object. The signs of the operating values depend (as for the powers) on the setting at address 1107 **P,Q sign**. Work calculation is not possible for single-phase busbar protection.

Energy metering can only be used in situations where a calculation of the power is possible.

The values are always positively incremented, decrementing does not occur. This means, for instance, that W_p+ goes up if the real power is positive and that in the presence of a negative real power W_p– goes up, but Wp+ does not go down, etc.

Please be aware that 7UT613/63x is, above all, a protection device. The precision of the metered values depends on the transformer (normally protection core) and the device tolerance. The metering is therefore not suited for tariff purposes.

The counters can be reset to zero or any initial value (see SIPROTEC 4 System Description).

Table 2-17 Operational metered values

Measured Values		primary
W_p+	Real power, output	kWh, MWh, GWh
W_p–	Real power, input	kWh, MWh, GWh
W_q+	Reactive power, output	kVARh, MVARh, GVARh
W_q–	Reactive power, input	kVARh, MVARh, GVARh

Operating Hours Meter

The main protective object is considered to be in operation if a current flows at least on one side, i.e. if the minimum threshold for detection of a current flow is exceeded, e.g. for side 1 the threshold **PoleOpenCurr.S1** (address 1111). A current which does not flow into the object from 2 measuring locations is theoretically zero because no current flows into the protective object.

In busbar protection, the busbar is considered to be in operation if a current flows through at least one measuring location (i.e. one feeder).

The 7UT613/63x counts the operating hours and outputs them in the measured values. The upper limit is 999.999 hours (approx. 114 years).

You can define a setpoint for the operating hours for the output of an operational indication.

2.22.6.2 Information List

No.	Information	Type of Information	Comments
-	Meter res	IntSP_Ev	Reset meter
888	Wp(puls)=	PMV	Pulsed Energy Wp (active)
889	Wq(puls)=	PMV	Pulsed Energy Wq (reactive)
916	WpΔ=	-	Increment of active energy
917	WqΔ=	-	Increment of reactive energy
924	Wp+=	MVMV	Wp Forward
925	Wq+=	MVMV	Wq Forward
928	Wp-=	MVMV	Wp Reverse
929	Wq-=	MVMV	Wq Reverse

2.22.7 Flexible Function

The flexible functions can be used for various protection, supervision and measuring purposes. Up to 12 flexible functions can be created in 7UT613/63x.

The flexible functions can be configured as independent protective functions (e.g. further time overcurrent protection for measuring locations), create additional stages for already existing protective functions or used for monitoring or control functions. When determining the function scope (Section 2.1.3) the number of flexible functions can be given.

Every flexible function is configured by defining analogue input value(s), type of measured value processing and logic link. Setting limit values, delay times, etc. can be reset with the setting groups (see section 2.1.5 under „Setting Groups“)

2.22.7.1 Function Description

General

When creating a flexible function you determine how the measured values (lead to the device) are to be processed. The measured values can be directly detected (e.g. currents) or mathematically combined (e.g. positive sequence system of the currents or current and voltage power).

The measured values can be monitored for overshooting or undershooting of a configurable threshold value. Delays, blocking and logical configuration possibilities are possible via user-definable logic functions (CFC).

A flexible function can signal the state that needs to be monitored, be used as control function or initiate tripping of one or more circuit breakers. The latter starts the circuit breaker failure protection with the trip command, if it has the same assignment characteristics.

Measured Values

All measured values given to the device can be used as analogue input quantities for a flexible function.

Three-phase values can be processed together or individually. Together means that the three-phase currents of a measuring point exceeding a common limit value have to be monitored, but have to be announced and processed individually. All settings are for all three currents. A flexible function can be created for each of the three phase

currents, then that exact size can be evaluated and the violation of the limit value condition can be further processed. Th settings are independent.

Derived (calculated) sizes can also be evaluated. Should the positive sequence system from the three phase currents be evaluated, the positive sequence system is calculated from the three analogue input quantities (phase currents) and used as evaluated quantity. The overall performance can be calculated and evaluated accordingly from the three currents and respective voltages (6 input quantities).

Processing

Violation of the set limit value picks up the function.

The pickup message follows a configurable time delay. The time delay is necessary when the pickup has to have time stabilisation. The condition to be monitored should first have sustained a certain minimum time before further action can be taken. The time delay is also useful when the sensitive reset ration (near 1) is necessary and therefore sporadic pickup signals should be avoided for measured quantities around the pickup value. The time delay is usually not necessary (set to 0) for protection tasks, except, if transient conditions need to be bridged (e.g. increased inrush currents).

The pickup drop-off can be postponed. After clearing the pickup criteria, the pickup signal will be maintained for this dropout relay time This can be used to monitor the intermittent events, if small gaps are to be bridged between the threshold transgressions.

If the function is to be triggered, a trip delay will be necessary. This starts with an effective pickup, i.e. after an approximate time delay. Time delay continues as long as no pickup reset is available, i.e. even during an approximate dropout relay. This should be considered when a dropout delay has been specified (see also the setting values in this section).

A trip command once transmitted is retained until the pickup is terminated, if applicable, also via the dropout delay. The command is retained for all together set minimum tripping times of the tripping functions (address 851 **`TMin TRIP CMD`**, see section 2.1.4 under „Circuit Breaker Data (Power System Data)“).

The dropout ration can be adapted to the requirements. When exceeding a limit value it may only be smaller than 1, if below then only greater than 1.

Blocking

Every flexible function can be blocked externally from the correspondingly configured binary input. Pickup is not possible during blocking. A possibly existing pickup will drop off. Delay times as well as dropout relay are reset.

Internal blocking is activated when, e.g. the measured quantities lie outside the function working area, as well as for internal faults (hardware, software).

Monitoring of measured quantities can also lead to blocking of flexible functions. One can chose if a function, which reacts to voltage processing (voltage or power), should have an internal blocking at a secondary measuring voltage failure. Voltage failure can be signalled by the circuit breaker for voltage transformers, via the binary input „`>FAIL:Feeder VT`“ (FNo. 361) as well as recognised by an internal voltage monitoring ("Fuse Failure Monitor“, see section 2.19.1).

For a function that reacts to current processing (current or power), you can chose if the function should be blocked for an indicated wire break in the secondary current of the affected measuring location.

Further Intervention Possibilities

Last but not least, you can influence a flexible function by logically interlinking own signals with other internal ones, or by signals that are externally coupled via binary inputs. The link can be created through the user-definable logic functions (CFC).

Blocking an overcurrent time protection time function can thus be done after detection of inrush currents. The detection of inrushes is functional part of the time overcurrent protection, as per Section 2.4.2.

A dynamic cold load pickup can be achieved by twice creating a flexible protective function (time overcurrent protection) with different pickup values. Depending on the dynamic cold load pickup according to section 2.6 one of the functions is released and the other one blocked.

You can combine overcurrent, undercurrent, direction and task frequency of the network decoupling or for load shedding. Criteria for under and overexcitation or reactive power control can be derived from reactive power measurement.

2.22.7.2 Setting Notes

General

Flexible Functions can only be created by a PC with DIGSI. Up to 20 flexible functions for protection or monitoring are possible. Each function can be individually configured by means of the options described below.

Please note that the available functions depend on the ordered device version as well as the configured assignments in accordance with 2.4.1. Voltage-controlled functions are only possible, for example, if measured voltages are connected to the device which have been assigned in accordance with section 2.4.1.

The required flexible functions must have been set during configuration of the functional scope (section 2.1.3).

During setting, please follow the sequence as described below. In DIGSI the tabs (setting sheets) should be edited from left to right.

Configuration Settings

The configuration settings can be executed for each desired flexible function. These settings are fixed and are not influenced by the setting group change-over. In contrast to this, the group of the function settings as described in the following next subsection can be executed for each setting group. Therefore, together with other protection and monitoring function, a setting group change-over can be carried out during operation.

Firstly, a rough selection must be made with regard to the measured value(s) to be evaluated by the flexible functions. Please note that where the polarity of measured values is important (power), the actual connections as well as the respective settings must also be taken into consideration. This applies both to the current polarity for the involved current measuring locations in accordance with section 2.1.4 and the respective CT data as well as the definition of signs in accordance with section 2.1.6 (address 1107 **P,Q sign**).

Only those of the following options appear, which compute with the existing measured values and the set protected object. Select the following:

- **Current measuring location / side**, if three-phase currents of a measuring location or side must be evaluated (also applicable to single-phase transformer). This applies to the evaluation of individual phase currents as well as three-phase currents of calculated values, for example symmetrical components (positive, negative and zero sequence network).
- **Current I1..I12**, if single-phase currents for single-phase busbars must be evaluated. Only 9 currents are possible for 7UT613 and 7UT633.

- **Current I1..I12**, if single-phase currents at single-phase additional measuring inputs must be evaluated. Only 3 additional measuring inputs are possible for 7UT613 and 7UT633. Only 1 single-phase additional measuring input is possible for 7UT635, if 5 three-phase inputs have been configured.
- **Voltage**, if voltages must be evaluated. This is only possible for 7UT613 or 7UT633 with voltage inputs.
- **Active power forward**, if forward power must be evaluated. This is only possible for 7UT613 or 7UT633 with voltage measuring inputs. Please ensure to use the correct assignment of voltages to the currents, from which the power is to be calculated, as well as polarity.
- **Active power reverse**, if reverse active power must be evaluated. This is only possible for 7UT613 or 7UT633 with voltage measuring inputs. Please ensure to use the correct assignment of voltages to the currents, from which the power is to be calculated, as well as polarity.
- **Reactive power forward**, if forward reactive power must be evaluated. This is only possible for 7UT613 or 7UT633 with voltage measuring inputs. Please ensure to use the correct assignment of voltages to the currents, from which the power is to be calculated, as well as polarity.
- **Reactive power reverse**, if reverse reactive power must be evaluated. This is only possible for 7UT613 or 7UT633 with voltage measuring inputs. Please ensure to use the correct assignment of voltages to the currents, from which the power is to be calculated, as well as polarity.
- **Power factor**, if the power factor must be evaluated. This is only possible for 7UT613 or 7UT633 with voltage measuring inputs. Please ensure to use the correct assignment of voltages to the currents, from which the power is to be calculated, as well as polarity.
- **Frequency**, if the frequency must be evaluated. As the frequency is derived from the measuring-circuit voltage, this is only possible for 7UT613 or 7UT633 with voltage measuring inputs.

If you have selected the 3-phase currents from the pre-selection above, (**current measuring location / side**), it is determined which exact measured values are supposed to be used for the evaluation of the flexible functions. The following applies to three-phase currents (incl. single-phase CT):

- **Side 1** to **side 5**: Select the desired side which currents are to be evaluated in three-phase. Only the sides that are determined in section 2.4.1 are possible. A maximum of 3 sides is possible for 7UT613 and 7UT633.
- **Measuring location 1** to **Measuring location 5**: If not the currents of a side of the main protected object are to be processed, but one (assigned or not assigned to the main protected object) of a three-phase measuring location, this can be determined here. A maximum of 3 measuring location is possible for 7UT613 and 7UT633.

Furthermore, it can be determined how the currents shall be processed. The respective phase currents can be evaluated jointly or individually or by means of the symmetrical component calculated from the three phase currents (the latter does not apply to single-phase CT):

- **IL1..IL3**: The phase currents are individually evaluated (e.g. with regard to overcurrent) and processed: Pickup, delays, commands. The setting values (pickup value, delay times) are however combined.
- **IL1** or **IL2** or **IL3**: Only the selected current will be evaluated (IL2 not applicable to single-phase CT). The flexible function thus evaluates only the selected phase current here. Each current to be evaluated requires a separate flexible function, however, each can be set and delayed individually.
- **3I0** or **I1** or **I2**: The selected symmetrical component is calculated and evaluated from the three phase currents (not applicable to single-phase CT).

If you have selected the 1-phase currents for busbar protection from the pre-selection above, (**I1..I12**), it is determined which of the currents must be used for the evaluation of the flexible functions.

- **CT1** or **CT2** or ... or **CT 12**: The current of the respective current measuring input is evaluated. In case of 7UT613 and 7UT633, only the 9 possible currents are available for selection.

If you have selected the 1-phase currents at the additional measuring inputs from the pre-selection, (**current IZ1..I1Z2**), it is determined which of the currents must be used for the evaluation of the flexible functions.

- **Auxiliary transformer AUX1** or **Auxiliary transformer AUX2** or ... or **Auxiliary transformer AUX4**: The current of the respective additional measuring input is evaluated. Only 3 additional measuring inputs are possible for 7UT613 and 7UT633. Only 1 single-phase additional measuring input is possible for 7UT635, if 5 three-phase inputs have been configured.

If you have chosen voltages from the pre-selection (**voltage**), this determines exactly which of the measured or calculated voltages must be used for the evaluation of the flexible functions. Voltage functions are only possible if the device has voltage inputs.

- **UL1E..UL3E**: The phase-ground voltages are individually evaluated (e.g. with regard to overvoltage) and processed: The setting values (pickup value, delay times) are however combined.
- **UL1E** or **UL2E** or **UL3E**: Only the selected voltage is evaluated. The flexible function thus evaluates only the selected phase-phase voltage here. Should you wish to monitor phase-phase voltages, a separate flexible function must be parameterised per phase-ground voltage to be evaluated. It can be set and delayed individually.
- **UL12..UL31**: The phase-phase voltages are individually evaluated (e.g. with regard to overvoltage) and processed: The setting values (pickup value, delay times) are however combined.
- **UL12** or **UL23** or **UL31**: Only the selected phase-phase voltage is evaluated. The flexible function thus evaluates only the selected phase-phase voltage here. Should you wish to monitor phase-phase voltages, a separate flexible function must be parameterised per phase-phase voltage to be evaluated. Each can be set and delayed individually.
- **U0** or **U1** or **U2**: The selected symmetrical component is calculated and evaluated from the three phase voltages (not applicable to single-phase transformer).

If you have chosen one of the power functions from the pre-selection above (**active power forward, active power reverse, reactive power forward, reactive power reverse, power factor**), a corresponding value is calculated from the phase voltages

and the voltages assigned to the currents. Power functions are only possible if the device has voltage inputs.

Set the measuring type for the power functions. Please note that this option has a respectively higher operating time due to the averaging over 16 periods. Short trip times are possible with this option as the power is determined over one period only. If also small active or reactive power must be calculated from bigger apparent power, this option is preferred and the phase-angle errors of the current and voltage transformers must be compensated by means of the respective setting of the error angle in address 803 **CORRECT. U Ang** (section 2.1.4).

Irrespective of which measuring value or calculated value was supposed to be determined by a flexible function, determine under Pickup whether the function is supposed to pick up on exceeding or undershooting the limit value, which shall be set at a later stage.

Function Setting

Under Function a flexible function can be activated or deactivated. If **message only** is set, this function only triggers a message and not a trip command. The command can be blocked if the function is activated (**block. relay**).

Enter the pickup value **pickup threshold** in a suitable dimension for the function. The dimension automatically appears in accordance with the above configured specifications of the evaluated value. The setting with regard to whether the limit value is to be monitored on exceeding or undershooting, has already been determined by the configuration settings.

The pickup and the drop-off of the fault detection can be delayed. **Delay of the pickup** means that after non-compliance with the limit value condition, this period must first expire before a pickup can be indicated and result in further actions. **Delay of the drop-off** means that, after activated pickup, same can be maintained and delayed by such time period after non-compliance of the limit value has stopped.

The trip command (if desired) is thus delayed by means of the **trip command delay**. The time starts on activation of the pickup (if necessary, also after time delay). Please note that the command delay must be set in such manner that it is significantly longer than a possibly set reset delay. Otherwise, every pickup will result in a trip because the pickup for the reset delay is maintained, although the criterion to be monitored is no longer complied with.

Please also note that the set times are pure additional delays that do not include the inherent operating time of the function (functional internal pickup and drop-off times). This has an effect especially on accurate power functions as these carry out measurements over 16 network period.

The dropout ratio can be set to wide ranges. If functions react on exceeding a limit value, such value is smaller than 1; if the functions that react on undershooting the limit value, such value is greater than 1. The possible setting range is automatically determined in accordance with the function, which has either been configured to **exceeding** or **undershooting**.

The drop-out ratio to be set depends on the application. In general, it can be stated that: the limit value must be closer to 1 the lesser the pickup value differs from the operating valid values. Latching of the pickup due to short-term fluctuations of the measured values during operation must be avoided.

Conversely, the drop-out ratio should not be set more sensitive (closer to 1) than necessary, thus avoiding an intermitting pickup to be caused in conditions close to the pickup value.

Apart from internal blockings that, for example, are activated outside the working range of the functions, internal monitoring of the measured values can lead to the blocking of a flexible function.

If a flexible function has been configured in such manner that it reacts on the processing of voltages (voltage or power), a **blocking on failure of measured voltages** can be effected. This applies to undervoltage functions and exceeding of power components, but also to the detection of negative sequence and zero systems. However, there may be cases where overfunctioning is preferred to underfunctioning. In such case set to **no**. A blocking on voltage failure is usually not required for overvoltage functions.

If a flexible function is configured in such manner that it reacts on the processing of currents (current or power), a **blocking on wire break in the current path** can be effected. This applies to undercurrent functions and exceeding of power components, but also to the detection of negative sequence and zero systems. However, there may be cases where overfunctioning is preferred to underfunctioning. In such case set to **no**. A blocking on wire break in the current path in overcurrent functions is usually not required.

Additional Steps

If an additional flexible function has been created, configured and set, the corresponding indications are entered in the DIGSI configuration matrix. These indications are kept general and assign the ld. number to the flexible functions, e.g. "**Flx01 Pickup L1**". You can now change their names to texts in accordance with your application.

Thereafter, configure these indications to binary inputs/outputs, if required.

2.22.7.3 Settings

Addresses which have an appended "A" can only be changed with DIGSI, under Additional Settings.

Addr.	Parameter	C	Setting Options	Default Setting	Comments
0	FLEXIBLE FUNC.		OFF ON Alarm Only Block relay	OFF	Flexible Function
0	Pick-up thresh.	1A 5A	0.05 .. 35.00 A 0.25 .. 175.00 A	2.00 A 10.00 A	Pick-up threshold I meas. location 1
0	Pick-up thresh.	1A 5A	0.05 .. 35.00 A 0.25 .. 175.00 A	2.00 A 10.00 A	Pick-up threshold I meas. location 2
0	Pick-up thresh.	1A 5A	0.05 .. 35.00 A 0.25 .. 175.00 A	2.00 A 10.00 A	Pick-up threshold I meas. location 3
0	Pick-up thresh.	1A 5A	0.05 .. 35.00 A 0.25 .. 175.00 A	2.00 A 10.00 A	Pick-up threshold I meas. location 4
0	Pick-up thresh.	1A 5A	0.05 .. 35.00 A 0.25 .. 175.00 A	2.00 A 10.00 A	Pick-up threshold I meas. location 5
0	Pick-up thresh.	1A 5A 0.1A	0.05 .. 35.00 A 0.25 .. 175.00 A 0.005 .. 3.500 A	2.00 A 10.00 A 0.200 A	Pick-up threshold I1
0	Pick-up thresh.	1A 5A 0.1A	0.05 .. 35.00 A 0.25 .. 175.00 A 0.005 .. 3.500 A	2.00 A 10.00 A 0.200 A	Pick-up threshold I2

Addr.	Parameter	C	Setting Options	Default Setting	Comments
0	Pick-up thresh.	1A 5A 0.1A	0.05 .. 35.00 A 0.25 .. 175.00 A 0.005 .. 3.500 A	2.00 A 10.00 A 0.200 A	Pick-up threshold I3
0	Pick-up thresh.	1A 5A 0.1A	0.05 .. 35.00 A 0.25 .. 175.00 A 0.005 .. 3.500 A	2.00 A 10.00 A 0.200 A	Pick-up threshold I4
0	Pick-up thresh.	1A 5A 0.1A	0.05 .. 35.00 A 0.25 .. 175.00 A 0.005 .. 3.500 A	2.00 A 10.00 A 0.200 A	Pick-up threshold I5
0	Pick-up thresh.	1A 5A 0.1A	0.05 .. 35.00 A 0.25 .. 175.00 A 0.005 .. 3.500 A	2.00 A 10.00 A 0.200 A	Pick-up threshold I6
0	Pick-up thresh.	1A 5A 0.1A	0.05 .. 35.00 A 0.25 .. 175.00 A 0.005 .. 3.500 A	2.00 A 10.00 A 0.200 A	Pick-up threshold I7
0	Pick-up thresh.	1A 5A 0.1A	0.05 .. 35.00 A 0.25 .. 175.00 A 0.005 .. 3.500 A	2.00 A 10.00 A 0.200 A	Pick-up threshold I8
0	Pick-up thresh.	1A 5A 0.1A	0.05 .. 35.00 A 0.25 .. 175.00 A 0.005 .. 3.500 A	2.00 A 10.00 A 0.200 A	Pick-up threshold I9
0	Pick-up thresh.	1A 5A 0.1A	0.05 .. 35.00 A 0.25 .. 175.00 A 0.005 .. 3.500 A	2.00 A 10.00 A 0.200 A	Pick-up threshold I10
0	Pick-up thresh.	1A 5A 0.1A	0.05 .. 35.00 A 0.25 .. 175.00 A 0.005 .. 3.500 A	2.00 A 10.00 A 0.200 A	Pick-up threshold I11
0	Pick-up thresh.	1A 5A 0.1A	0.05 .. 35.00 A 0.25 .. 175.00 A 0.005 .. 3.500 A	2.00 A 10.00 A 0.200 A	Pick-up threshold I12
0	Pick-up thresh.	1A 5A	0.05 .. 35.00 A 0.25 .. 175.00 A	2.00 A 10.00 A	Pick-up threshold IZ1
0	Pick-up thresh.	1A 5A	0.05 .. 35.00 A 0.25 .. 175.00 A	2.00 A 10.00 A	Pick-up threshold IZ2
0	Pick-up thresh.	1A 5A	0.05 .. 35.00 A 0.25 .. 175.00 A	2.00 A 10.00 A	Pick-up threshold IZ3
0	Pick-up thresh.	1A 5A	0.05 .. 35.00 A 0.25 .. 175.00 A	2.00 A 10.00 A	Pick-up threshold IZ4
0	Pick-up thresh.		0.001 .. 1.500 A	0.100 A	Pick-up threshold IZ3 sens.
0	Pick-up thresh.		0.001 .. 1.500 A	0.100 A	Pick-up threshold IZ4 sens.
0	Pick-up thresh.		0.05 .. 35.00 I/InS	2.00 I/InS	Pick-up threshold I-side
0	P.U. THRESHOLD		1.0 .. 170.0 V	110.0 V	Pickup Threshold
0	P.U. THRESHOLD		1.0 .. 170.0 V	110.0 V	Pickup Threshold
0	P.U. THRESHOLD		40.00 .. 66.00 Hz	51.00 Hz	Pickup Threshold
0	P.U. THRESHOLD		10.00 .. 22.00 Hz	18.00 Hz	Pickup Threshold
0	P.U. THRESHOLD	1A 5A	1.7 .. 3000.0 W 8.5 .. 15000.0 W	200.0 W 1000.0 W	Pickup Threshold

Addr.	Parameter	C	Setting Options	Default Setting	Comments
0	Pick-up thresh.		0.01 .. 17.00 P/SnS	1.10 P/SnS	Pick-up threshold P-side
0	Pick-up thresh.	1A 5A	1.7 .. 3000.0 VAR 8.5 .. 15000.0 VAR	200.0 VAR 1000.0 VAR	Pick-up threshold Q meas. location
0	Pick-up thresh.		0.01 .. 17.00 Q/SnS	1.10 Q/SnS	Pick-up threshold Q-side
0	P.U. THRESHOLD		-0.99 .. 0.99	0.50	Pickup Threshold
0	T TRIP DELAY		0.00 .. 3600.00 sec	1.00 sec	Trip Time Delay
0A	T PICKUP DELAY		0.00 .. 60.00 sec	0.00 sec	Pickup Time Delay
0A	T DROPOUT DELAY		0.00 .. 60.00 sec	0.00 sec	Dropout Time Delay
0A	BLOCKED BY FFM		YES NO	YES	Block in case of Meas.-Voltage Loss
0A	Blk I brkn cond		YES NO	YES	Block for broken conductor in CT path
0A	DROPOUT RATIO		0.70 .. 0.99	0.95	Dropout Ratio
0A	DROPOUT RATIO		1.01 .. 3.00	1.05	Dropout Ratio
0	MEAS. QUANTITY		I-Meas Loc/side Curr. I1..I12 Curr. IZ1..IZ4 Voltage P forward P reverse Q forward Q reverse Power factor Frequency	I-Meas Loc/side	Selection of Measured Quantity
0	Func. assigned		Side 1 Side 2 Side 3 Side 4 Side 5 Measuring loc.1 Measuring loc.2 Measuring loc.3 Measuring loc.4 Measuring loc.5	Side 1	Function is applied to
0	Func. per phase		IL1..IL3 IL1 IL2 IL3 3I0 (Zero seq.) I1 (Pos. seq.) I2 (Neg. seq.)	IL1..IL3	Function utilises component(s)

Addr.	Parameter	C	Setting Options	Default Setting	Comments
0	Func. assigned		I-CT 1 I-CT 2 I-CT 3 I-CT 4 I-CT 5 I-CT 6 I-CT 7 I-CT 8 I-CT 9 I-CT 10 I-CT 11 I-CT 12	I-CT 1	Function is applied to
0	Func. assigned		AuxiliaryCT IX1 AuxiliaryCT IX2 AuxiliaryCT IX3 AuxiliaryCT IX4	AuxiliaryCT IX1	Function is applied to
0	Func. per phase		UL1E..UL3E UL1E UL2E UL3E UL12..UL31 UL12 UL23 UL31 U0 (Zero seq.) U1 (Pos. seq.) U2 (Neg. seq.) U4/Uen	UL1E..UL3E	Function utilises component(s)
0	PICKUP WITH		Exceeding Dropping below	Exceeding	Pickup with
0A	Type of meas.		accurate fast	accurate	Selection of type of measurement

2.22.7.4 Information List

No.	Information	Type of Information	Comments
235.2110	>BLOCK $00	SP	>BLOCK Function $00
235.2111	>$00 instant.	SP	>Function $00 instantaneous TRIP
235.2113	>$00 BLK.TDly	SP	>Function $00 BLOCK TRIP Time Delay
235.2114	>$00 BLK.TRIP	SP	>Function $00 BLOCK TRIP
235.2115	>$00 BL.TrpL1	SP	>Function $00 BLOCK TRIP Phase L1
235.2116	>$00 BL.TrpL2	SP	>Function $00 BLOCK TRIP Phase L2
235.2117	>$00 BL.TrpL3	SP	>Function $00 BLOCK TRIP Phase L3
235.2118	$00 BLOCKED	OUT	Function $00 is BLOCKED
235.2119	$00 OFF	OUT	Function $00 is switched OFF
235.2120	$00 ACTIVE	OUT	Function $00 is ACTIVE
235.2121	$00 picked up	OUT	Function $00 picked up
235.2122	$00 pickup L1	OUT	Function $00 Pickup Phase L1
235.2123	$00 pickup L2	OUT	Function $00 Pickup Phase L2
235.2124	$00 pickup L3	OUT	Function $00 Pickup Phase L3

No.	Information	Type of Information	Comments
235.2125	$00 Time Out	OUT	Function $00 TRIP Delay Time Out
235.2126	$00 TRIP	OUT	Function $00 TRIP
235.2128	$00 inval.set	OUT	Function $00 has invalid settings
235.2701	>$00 Blk Trip12	SP	>Function $00 block TRIP L12
235.2702	>$00 Blk Trip23	SP	>Function $00 block TRIP L23
235.2703	>$00 Blk Trip31	SP	>Function $00 block TRIP L31
235.2704	$00 Pick-up L12	OUT	Function $00 Pick-up L12
235.2705	$00 Pick-up L23	OUT	Function $00 Pick-up L23
235.2706	$00 Pick-up L31	OUT	Function $00 Pick-up L31

2.22.8 Oscillographic Fault Recording

The 7UT613/63x differential protection is equipped with a fault recording function.

2.22.8.1 Function Description

The instantaneous values of measured values

$I_{L1\ S1}$, $I_{L2\ S1}$, $I_{L3\ S1}$, $I_{L1\ S2}$, $I_{L2\ S2}$, I_{L3S2}, $3I_{0S1}$, $3I_{0S2}$, I_7, I_8 as well as

$I_{diff\ L1}$, $I_{diff\ L2}$, $I_{diff\ L3}$, $I_{rest\ L1}$, $I_{rest\ L2}$, $I_{rest\ L3}$

are sampled at intervals of 1,667 ms (for 50 Hz) and stored in a circulation buffer (16 samples per cycle). When used as single-phase busbar protection, the first six feeder currents $_1$ to I_6 are stored instead of the phase currents, the zero sequence currents are not applicable.

During a system fault, these data are stored over a time span that can be set (5 s at most for each fault record). Up to 8 faults can be stored. The total capacity of the fault record memory is approx. 5 s. The fault recording buffer is updated when a new fault occurs, so that acknowledgement is not required. Storage of the fault recording by the protection fault detection can also be initiated via binary input, the integrated keypad and display, or via the serial operator or service interface.

The data can be retrieved via the serial interfaces by means of a personal computer and evaluated with the operating software DIGSI and the graphic analysis software SIGRA 4. The latter graphically represents the data recorded during the system fault and calculates additional information such as power or rms values from the measured values. A selection may be made as to whether the measured quantities are represented as primary or secondary values. Binary signal traces (marks) of particular events e.g. „fault detection“, „tripping“ are also represented.

If the device has a serial system interface, the fault recording data can be passed on to a central device via this interface. The evaluation of the data is done by the respective programs in the central device. The measured quantities are referred to their maximum values, scaled to their rated values and prepared for graphic representation. Binary signal traces (marks) of particular events e.g. „fault detection“, „tripping“ are also represented.

Where transfer to a central device is possible, the request for data transfer can be executed automatically. It can be selected to take place after each protection pickup or after a trip only.

2.22.8.2 Setting Notes

Other settings pertaining to fault recording (waveform capture) are found in the submenu Oscillographic Fault Records of the Settings menu. Waveform capture makes a distinction between the trigger instant for an oscillographic record and the criterion to save the record (address 901 **WAVEFORMTRIGGER**). Normally the trigger is the pickup of a protective element, i.e. the time 0 is defined as the instant picked up by the first protection function. The criterion for saving may be both the device pickup (***Save w. Pickup***) or the device trip (***Save w. TRIP***). A trip command issued by the device can also be used as trigger instant (***Start w. TRIP***); in this case it is also the saving criterion.

The actual storage time begins at the pre-fault time **PRE. TRIG. TIME** (address 904) ahead of the reference instant, and ends at the post-fault time**POST REC. TIME** (address 905) after the storage criterion has reset. The maximum recording duration to each fault (**MAX. LENGTH**) is entered in address 903. Recording to each fault may take max. 5 seconds. A total of 8 records can be saved. However the total length of time of all fault records in the buffer may not exceed 5 seconds.

An oscillographic record can be triggered and saved by a change in status of a binary input or via the operating interface connected to a PC. Storage is then triggered dynamically. The length of a record for these special triggers is set in address 906 **BinIn CAPT.TIME** (upper bound is **MAX. LENGTH**, address 903). Pre-trigger and post-dropout times are included. If the binary input time is set to ∞, then the length of the record equals the time that the binary input is activated (static), or the **MAX. LENGTH** setting in address 903, whichever is shorter.

2.22.8.3 Settings

Addr.	Parameter	Setting Options	Default Setting	Comments
901	WAVEFORMTRIGGER	Save w. Pickup Save w. TRIP Start w. TRIP	Save w. Pickup	Waveform Capture
903	MAX. LENGTH	0.30 .. 5.00 sec	1.00 sec	Max. length of a Waveform Capture Record
904	PRE. TRIG. TIME	0.05 .. 0.50 sec	0.10 sec	Captured Waveform Prior to Trigger
905	POST REC. TIME	0.05 .. 0.50 sec	0.10 sec	Captured Waveform after Event
906	BinIn CAPT.TIME	0.10 .. 5.00 sec; ∞	0.50 sec	Capture Time via Binary Input

2.22.8.4 Information List

No.	Information	Type of Information	Comments
-	FltRecSta	IntSP	Fault Recording Start
4	>Trig.Wave.Cap.	SP	>Trigger Waveform Capture
30053	Fault rec. run.	OUT	Fault recording is running

2.22.9 Commissioning Aids

For commissioning of the device, a comprehensive commissioning and monitoring tool is available.

2.22.9.1 Web Monitor

The device is provided with a comprehensive commissioning and monitoring tool that monitors and checks the measured values and the whole differential protection system. Using a personal computer in conjunction with a web browser, this tool enables the user to clearly chart the state of the system and the differential protection values, measured values and indications. The necessary operator software is integrated in the device; online help can be found on the DIGSI CD and is also available in the Internet.

To ensure a proper communication between the device and the PC browser the transmission speed must be equal for both. Furthermore, an IP-address is necessary so that the browser can identify the device. For 7UT613/63x, the following is valid:

Transmission speed: **115** kBaud;

IP-address

for connection at the front operator interface: **192.168.1.1**,

for connection to the rear service interface (port C): **192.168.2.1**.

The „Web Monitor“ shows the device front with its keypad and LCD display on the screen, thus allowing to operate the device from the PC. The actual operation of the device can be simulated with the mouse pointer.

Measured values and the values derived from them are graphically displayed as phasor diagrams. You can also view tripping diagrams, scalar values are shown in numerical form. Most of the measured values discussed in Subsection 2.22.2 can also be displayed in the „Web Monitor“.

For more details on working with the „Web Monitor“, refer to the Online Help attached.

Function Description

This tool allows to graphically illustrates on a PC, for example, the currents and their phase angles for both sides of the protected object during commissioning and during operation. In addition to phasor diagrams of measured values, numerical values are indicated. The following figure shows an example of this function.

Additionally the position of the differential and restraint values can be viewed in the tripping characteristic.

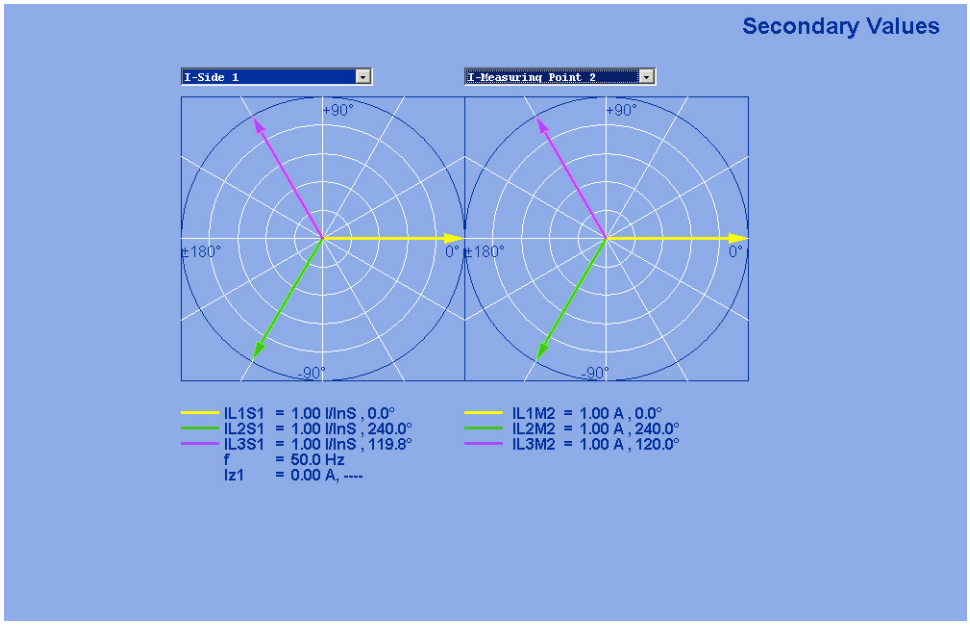

Figure 2-125 Phasor Diagram of the Secondary Measured Values — Example

2.23 Average Values, Minimum and Maximum Values

Average, minimum and maximum values, minimum and maximum values of average values, long-term average values, are calculated by the 7UT613/63x and can be read out with the time reference (date and time of the last update).

The defined values of the average values and minimum and maximum values are to be defined and up to 20 calculation units can be created with the help of DIGSI under menu item „Extended Measuring Values 1-20“ in menu „Functional Scope“.

The parameter „Input Variable“ determines the measured value for which the calculation unit calculates the average values and the minimum/maximum values.

The following can be selected: phase currents of the measuring locations and sides, voltages, power values, residual currents, frequency and differential protection values. Selection of the input value varies depending on the protection device 7UT613/63x and the settings of the configuration parameters.

With the parameter „Scope of the Extended Measured Values“, it can be determined whether calculation units are to calculate average values, minimum and maximum values or minimum and maximum values of long-term average values, or a combination thereof.

Extent of the extended measured values:	Min/Max Min/Max/Average Min/Max/Average + Min/Max of Average Average Average + Min/Max of Average

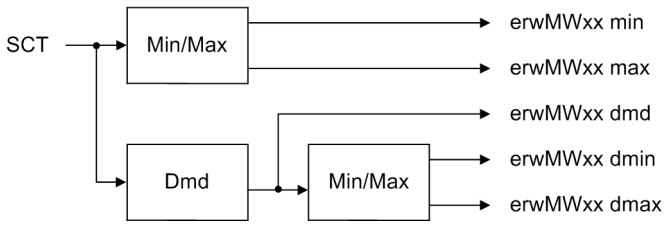

The calculated average values and minimum/maximum values appear in the device menu „Measured Values“ in the menus „MV Measured Values“, „Average, Min/Max“ and „MV, Min/Max“ and in DIGSI in the menus „Minimum and Maximum Values“, „Average Values“ and „Minimum and Maximum Values of the Average Values“ under menu „Min/Max and Average Values“ in menu „Measured Values“.

The results of the calculation unit can be reset via the set message/binary input message in parameter „Resetting of the ext. Measured Values“ or via DIGSI, or the integrated control panel.

2.23.1 Demand Measurement Setup

2.23.1.1 Setting Notes

Mean Value Formation

The synchronisation instant within one hour, the time interval and the time interval for averaging can be set via parameters.

The selection of the time period for measured value averaging is set with parameter 7611 **DMD Interval** in the corresponding setting group from A to D under **MEASUREMENT**. The first number specifies the averaging time window in minutes while the second number gives the frequency of updates within the time window. ***15 Min., 3 Subs***, for example, means: Time average is generated for all measured values with a window of 15 minutes. The output is updated every 15/3 = 5 minutes.

Under address 7612 **DMD Sync.Time** it can be determined whether the point in time for averaging selected under address 7611 is to commence on the hour (***On The Hour***) or is to be synchronised with another point in time (***15 After Hour***, ***30 After Hour*** or ***45 After Hour***).

If the settings for averaging are changed, then the measured values stored in the buffer are deleted, and new results for the average calculation are only available after the set time period has passed.

2.23.1.2 Settings

Addr.	Parameter	Setting Options	Default Setting	Comments
7611	DMD Interval	15 Min., 1 Sub 15 Min., 3 Subs 15 Min.,15 Subs 30 Min., 1 Sub 60 Min., 1 Sub 60 Min.,10 Subs 5 Min., 5 Subs	60 Min., 1 Sub	Demand Calculation Intervals
7612	DMD Sync.Time	On The Hour 15 After Hour 30 After Hour 45 After Hour	On The Hour	Demand Synchronization Time

2.23.2 Min/Max Measurement Setup

2.23.2.1 Setting Notes

Resetting of the minimum and maximum values can also be done cyclically, commencing with the preselected starting time. To select this feature, address 7621 **MinMax cycRESET** should be set to ***YES***. The point in time when reset is to take place (the minute of the day in which reset will take place) is set at address 7622 **MiMa RESET TIME**. The reset cycle in days is entered at address 7623 **MiMa RESETCYCLE**, and the beginning date of the cyclical process, from the time of the setting procedure (in days), is entered at address 7624 **MinMaxRES.START**.

2.23.2.2 Settings

Addr.	Parameter	Setting Options	Default Setting	Comments
7621	MinMax cycRESET	NO YES	YES	Automatic Cyclic Reset Function
7622	MiMa RESET TIME	0 .. 1439 min	0 min	MinMax Reset Timer
7623	MiMa RESETCYCLE	1 .. 365 Days	7 Days	MinMax Reset Cycle Period
7624	MinMaxRES.START	1 .. 365 Days	1 Days	MinMax Start Reset Cycle in

2.23.2.3 Information List

No.	Information	Type of Information	Comments
-	ResMinMax	IntSP_Ev	Reset Minimum and Maximum counter
11001	>Reset MinMax	SP	>Reset MinMaxValues

2.24 Command Processing

A control command process is integrated in the SIPROTEC ® 7UT613/63x to coordinate the operation of circuit breakers and other equipment in the power system.

Control commands can originate from four command sources:

- Local operation using the keypad on the local user interface of the device
- Operation using DIGSI®
- Remote operation via network control center or substation controller (e.g. SICAM®),
- Automatic functions (e.g., using a binary input)

Switchgear with single and multiple busbars are supported. The number of switchgear devices to be controlled is limited only by the number of binary inputs and outputs present. High security against inadvertent device operations can be ensured if interlocking checks are enabled. A standard set of optional interlocking checks is provided for each command issued to circuit breakers/switchgear.

2.24.1 Control Authorization

2.24.1.1 Type of Commands

Commands to the System

This type of commands are directly output to the switchgear to change their process state:

- Commands for the operation of circuit breakers (asynchronous; or synchronized through integration of the synchronism check and closing control function) as well as commands for the control of isolators and earth switches.
- Step commands, e.g. for raising and lowering transformer taps,
- Setpoint commands with configurable time settings, e.g. to control Petersen coils.

Device-internal Commands

These commands do not directly operate binary outputs. They serve for initiating internal functions, communicating the detection of status changes to the device or for acknowledging them.

- Manual override commands for „manual update“ of information on process-dependent objects such as annunciations and switching states, e.g. if the communication with the process is interrupted. Manually overidden objects are marked as such in the information status and can be displayed accordingly.
- Flagging commands (for „setting“) the data value of internal objects, e.g. switching authority (remote/local), parameter switchovers, transmission blockages and deletion and presetting of metered values.
- Acknowledgment and resetting commands for setting and resetting internal buffers or data stocks.
- Information status commands to set/delete the additional „Information Status“ item of a process object, such as
  - Acquisition blocking,
  - Output blocking.

2.24.1.2 Sequence in the Command Path

Security mechanisms in the command path ensure that a switch command can be carried out only if the test of previously established criteria has been successfully completed. Additionally, user-defined interlocking conditions can be configured separately for each device. The actual execution of the command is also monitored after its release. The entire sequence of a command is described briefly in the following.

Checking a Command Path

Please observe the following:

- Command entry, e.g. using the keypad on the local user interface of the device
  - Check password → access rights;
  - Check switching mode (interlocking activated/deactivated) → selection of deactivated interlocking status.
- User configurable interlocking checks:
  - Switching authority;
  - Device position check (set vs. actual comparison);
  - Zone controlled / bay interlocking (logic using CFC);
  - System interlocking (centrally via SICAM);
  - Double operation (interlocking against parallel switching operation);
  - Protection blocking (blocking of switching operations by protection functions);
  - Circuit breaker synchronization check (synchronism check before a close command).
- Fixed commands:
  - Internal process time (software watch dog which checks the time for processing the control action between initiation of the control and final close of the relay contact);
  - Configuration in process (if setting modification is in process, commands are rejected or delayed);
  - Equipment present as output;
  - Output block (if an output block has been programmed for the circuit breaker, and is active at the moment the command is processed, then the command is rejected);
  - Component hardware malfunction;
  - Command in progress (only one command can be processed at a time for each circuit breaker or switch);
  - 1–of–n check (for multiple allocations such as common contact relays or multiple protection commands configured to the same contact it is checked if a command procedure was already initiated for the output relays concerned or if a protection command is present. Superimposed commands in the same switching direction are tolerated).

Command Execution Monitoring

The following is monitored:

- Interruption of a command because of a cancel command,
- Running time monitor (feedback monitoring time).

2.24.1.3 Interlocking

Interlocking can be executed by the user-defined logic (CFC). Switchgear interlocking checks in a SICAM/SIPROTEC 4 system are normally divided in the following groups:

- System interlocking checked by a central control system (for interbay interlocking),
- Zone controlled / bay interlocking checked in the bay device (for the feeder).
- Cross-bay interlocking via GOOSE messages directly between bay controllers and protection relays (with rollout of IEC 61850; inter-relay communication by GOOSE is performed via the EN100 module)

Zone Controlled/Bay Interlocking Zone controlled / bay interlocking relies on the object database (feedback information) of the bay unit (here the SIPROTEC 4 relay) as was determined during configuration (see SIPROTEC 4 System Description).

The extent of the interlocking checks is determined by the configuration and interlocking logic of the relay. For more information on GOOSE, please refer to the SIPROTEC 4 System Description /1/.

Switching objects that require system interlocking in a central control system are marked by a specific parameter inside the bay unit (via configuration matrix).

For all commands, operation with interlocking (normal mode) or without interlocking (test mode) can be selected:

- For local commands by reprogramming the settings with password check,
- For automatic commands, via command processing by CFC and Deactivated Interlocking Recognition,
- For local / remote commands, using an additional interlocking disable command via PROFIBUS.

Interlocked/non-interlocked Switching

The configurable command checks in the SIPROTEC 4 devices are also called „standard interlocking“. These checks can be activated via DIGSI (interlocked switching/tagging) or deactivated (non-interlocked).

De-interlocked or non-interlocked switching means that the configured interlock conditions are not tested.

Interlocked switching means that all configured interlocking conditions are checked within the command processing. If a condition could not be fulfilled, the command will be rejected by an indication with a minus added to it, e.g. „CO–“, followed by an operation response information. The command is rejected if a synchronism check is carried out before closing and the conditions for synchronism are not fulfilled. Table 2-18 shows some types of commands and indications. The indications marked with *) are displayed only in the event logs on the device display; for DIGSI they appear in spontaneous indications.

Table 2-18 Command types and corresponding indications

Type of Command	Control	Cause	Indication
Control issued	Switching	CO	CO+/–
Manual tagging (positive / negative)	Manual tagging	MT	MT+/–
Information state command, Input blocking	Input blocking	ST	ST+/– *)
Information state command, Output blocking	Output blocking	ST	ST+/– *)
Cancel command	Cancel	CA	CA+/–

The plus sign indicated in the indication is a confirmation of the command execution: The command output has a positive result, as expected. A minus sign means a negative, i.e. an unexpected result; the command was rejected. Figure 2-126 shows an example in the operational indications command and feedback of a positively run switching action of the circuit breaker.

The check of interlocking can be programmed separately for all switching devices and tags that were set with a tagging command. Other internal commands such as overriding or abort are not tested, i.e. are executed independently of the interlockings.

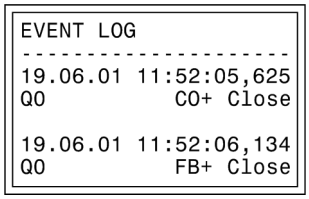

Figure 2-126 Example of an operational indication for switching circuit breaker 52

Standard Interlocking

The standard interlocking includes the checks for each switchgear which were set during the configuration of inputs and outputs, see SIPROTEC 4 System Description.

An overview for processing the interlocking conditions in the relay is shown in Figure 2-127.

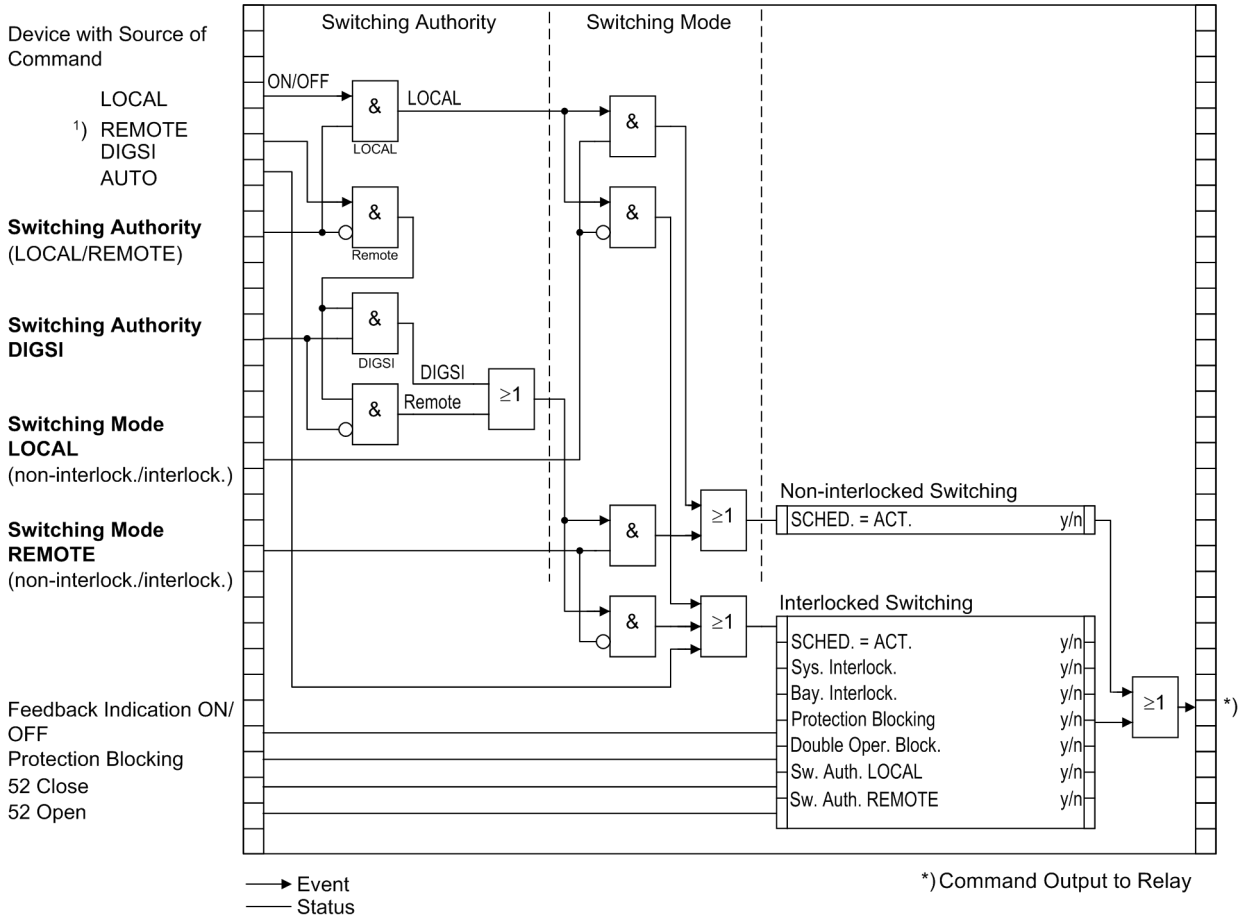

Figure 2-127 Standard interlockings

1) Source of Command REMOTE includes LOCAL.

LOCAL Command using substation controller

REMOTE Command via telecontrol station to power system management and from power system management to the device

The display shows the configured interlocking reasons. The are marked by letters as explained in Table 2-19.

Table 2-19 Interlocking Commands

Interlocking Commands	Command	Display
Switching Authority	L	L
System Interlocking	S	S
Bay Interlocking	Z	Z
SET = ACTUAL (switch direction check)	P	P
Protection Blockage	B	B

Figure 2-128 shows all interlocking conditions (which usually appear in the display of the device) for three switchgear items with the relevant abbreviations explained in Table 2-19. All parameterised interlocking conditions are indicated.

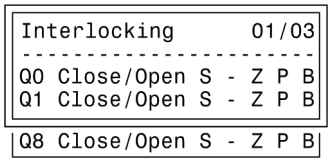

Figure 2-128 Example of configured interlocking conditions

Control Logic via CFC

For the bay interlocking, an enabling logic can be structured using the CFC. Via specific release conditions the information „released“ or „bay interlocked“ are available, e.g. object „52 Close“ and „52 Open“ with the data values: ON / OFF).

2.24.1.4 Recording and Acknowledgement of Commands

During the processing of commands, independently of the further allocation and processing of indications, command and process feedbacks are sent to the indication processing. These indications contain information on the cause. With the corresponding allocation (configuration) these indications are entered in the event log, thus serving as a report.

Acknowledgement of Commands to the Device Front

All indications with the source of command LOCAL are transformed into a corresponding response and shown in the display of the device.

Acknowledgement of Commands to Local/Remote/ DIGSI

The acknowledgement of indications which relate to commands with the origin “Command Issued = Local/ Remote/DIGSI” are sent back to the initiating point independent of the routing (configuration on the serial digital interface).

The acknowledgement of commands is therefore not executed by a response indication as it is done with the local command but by ordinary command and feedback information recording.

Feedback Monitoring

Command processing time monitors all commands with feedback. Parallel to the command, a monitoring time period (command runtime monitoring) is started which checks whether the switchgear has achieved the desired final state within this period. The monitoring time is stopped as soon as the feedback information arrives. If no feedback information arrives, a response „`Time Limit Expired`“ appears and the process is terminated.

Commands and their feedbacks are also recorded as operational indications. Normally the execution of a command is terminated as soon as the feedback information (**FB+**) of the relevant switchgear arrives or, in case of commands without process feedback information, the command output resets.

In the feedback, the plus sign means that a command has been positively completed. The command was as expected, in other words positive. The "minus" is a negative confirmation and means that the command was not executed as expected.

Command Output / Switching Relays

The command types needed for tripping and closing of the switchgear or for raising and lowering transformer taps have been defined during the configuration, see also SIPROTEC 4 System Description.

2.24.1.5 Information List

No.	Information	Type of Information	Comments
-	Cntrl Auth	IntSP	Control Authority
-	Cntrl Auth	DP	Control Authority
-	ModeREMOTE	IntSP	Controlmode REMOTE
-	ModeLOCAL	IntSP	Controlmode LOCAL
-	ModeLOCAL	DP	Controlmode LOCAL
-	CntrlDIGSI	LV	Control DIGSI

■

Mounting and Commissioning 3

This chapter is primarily intended for experienced commissioning engineers. The commissioning engineer must be familiar with the commissioning of protection and control systems, with the management of power systems and with the relevant safety rules and guidelines. Under certain circumstances adaptations of the hardware to the particular power system data may be necessary. The primary tests require the protected object (line, transformer etc.) to carry load.

3.1	Mounting and Connections	340
3.2	Checking Connections	374
3.3	Commissioning	379
3.4	Final Preparation of the Device	420

3.1 Mounting and Connections

General



WARNING!

Warning of improper transport, storage, installation, and application of the device.

Non-observance can result in death, personal injury or substantial property damage.

Trouble free and safe use of this device depends on proper transport, storage, installation, and application of the device according to the warnings in this instruction manual.

Of particular importance are the general installation and safety regulations for work in a high-voltage environment (for example, VDE, IEC, EN, DIN, or other national and international regulations). These regulations must be observed.

3.1.1 Configuration Information

Prerequisites

For installation and connections the following conditions must be met:

The rated device data has been tested as recommended in the SIPROTEC 4 System Description and their compliance with the Power System Data is verified.

Connection Variants

General diagrams are shown in the Appendix A.2. Connection examples for current and voltage transformer circuits are provided in Appendix A.3. It must be checked that the settings for configuration (Subsection 2.1.3) and the Power System Data (Subsection 2.1.4) match the connections to the device.

Protected Object

The setting of the **protected object** (address 105) must correspond to the object to be protected. An incorrect setting may cause unforeseeable reactions by the device.

Please note that for auto-transformers **PROT. OBJECT** = **autotransf.** and not **3-phase transf.** must be set. For **single-phase transformer** , the centre phase L2 is not used.

Currents

Connection of the CT currents depends on the mode of application.

With three-phase connection the three phase currents are assigned to the measuring locations. Connection examples for the various protected objects are provided in the Appendix A.3. Please refer also to the Appendix A.2 for the general diagrams that apply to this device. Check that the measuring locations are correctly assigned to the sides of the protected object and to the measuring inputs on the device.

With two-phase connection of a single-phase transformer the centre phase will not be used. Appendix A.3 shows connection examples. Even if there is only one current transformer, both phases (IL1and IL3) will be used. Also observe the General Diagrams in annex A.2 that apply to the current device.

With single-phase busbar protection the measuring inputs are each assigned to one busbar feeder. Appendix A.3 illustrates an example for one phase. The other phases are to be connected accordingly. Also observe the General Diagrams in annex A.2 that apply to the current device.

In case of summation CT connection, please note that the rated output current of the summation transformers is usually 100 mA. The measuring inputs of the device have to be adjusted accordingly. Consider also that in 7UT613 and 7UT633 only 9 of the current inputs can be changed to 0.1 A rated input, and in 7UT635 12 current inputs. Pay attention to the assignment of the different feeder currents to the current inputs of the device.

The assignment of the 1-phase current inputs must be checked. Connections also differ according to the application the device is used for. The Appendix A.3 offers some connection examples. Please refer also to Appendix A.2 for the general diagrams that apply to this device. Pay attention to the assignment of the different 1-phase measuring locations to the 1-phase measuring inputs of the device. For more details, refer to subsection 2.1.4.

Also check the rated data and the matching factors of the current transformers.

The allocation of the protection functions to the sides must be consistent. This applies particularly to the circuit breaker failure protection whose measuring point (side) must correspond with the side of the circuit breaker to be monitored.

Voltages

Voltage measurement is only possible in the appropriate variants of the versions 7UT613 and 7UT633. This paragraph only applies when measured-circuit voltage is connected to the device and this has been stated in the configuration according to 2.1.4, margin heading „Assignment of Voltage Measuring Inputs“.

In the Appendix A.3 you will find possible examples of the voltage transformer connection options.

The voltage transformer connections must comply with the settings in paragraph 2.1.4 (margin heading „Assignment of Voltage Measuring Inputs“). Pay attention to the type of connection of the 4th voltage input U4 if it is used.

Binary Inputs and Outputs

The connections to the power plant depend on the possible allocation of the binary inputs and outputs, i.e. how they are assigned to the power equipment. The preset allocation can be found in the tables in Section A.5 of the Appendix. Check also whether the labelling corresponds to the allocated indication functions.

Here it is also very important that the feedback (auxiliary contacts) used for the breaker failure protection of the circuit-breaker to be monitored, are connected to the correct binary inputs which correspond to the assigned side of the circuit breaker failure protection and the cold load pickup. Similar applies for the manual close recognition of the time overcurrent protection functions.

Changing Setting Groups

If the setting group change-over function is done via binary inputs, please observe the following:

To enable the control of 4 possible setting groups, 2 binary inputs must be made available. These have been marked with „>Set Group Selec.1“ and „Set Group Selec.2“ and must be allocated to 2 physical binary inputs so that they can be controlled.

One binary input is sufficient to control 2 setting groups, namely „>Set Group Selec.1“, since the non-allocated binary input „Set Group Selec.2“ is then considered as not activated.

The control signals must be continuously present in order that the selected setting group remains active.

The following table shows the relationship between binary inputs and the setting groups A to D. Principal connection diagrams for the two binary inputs are illustrated in the figure below. The figure illustrates an example in which Set Group Bit 1 and Set Group Bit 2 are configured to be controlled (actuated) when the associated binary input is energized (high).

Table 3-1 Changing setting groups with binary inputs

Binary Input		Active Group
>Set Group Bit 1	>Set Group Bit 2	
no	no	Group A
yes	no	Group B
no	yes	Group C
yes	yes	Group D

1) no = not activated
2) yes = activated

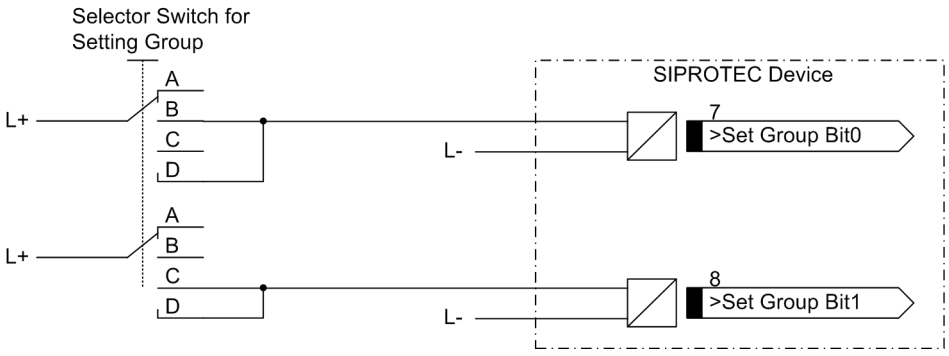

Figure 3-1 Connection diagram for setting group switching with binary inputs (example)

Trip Circuit Supervision

Please note that two binary inputs or one binary input and one bypass resistor R must be connected in series. The pickup threshold of the binary inputs must therefore be substantially below half the rated control DC voltage.

If two binary inputs are used for the trip circuit supervision, these binary inputs must be isolated, i.o.w. not be communed with each other or with another binary input.

If one binary input is used, a bypass resistor R must be employed. This resistor R is connected in series with the second circuit breaker auxiliary contact (Aux2). The value of this resistor must be such that in the circuit breaker open condition (therefore Aux1 is open and Aux2 is closed) the circuit breaker trip coil (TC) is no longer picked up and binary input (BI1) is still picked up if the command relay contact is open.

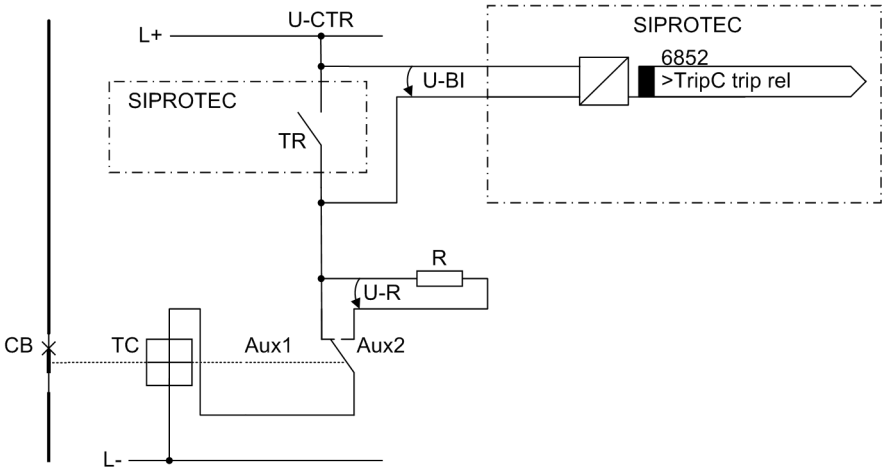

Figure 3-2 Logic diagram of the trip circuit supervision using one binary input

TR Trip relay contact

CB Circuit breaker

TC Circuit breaker trip coil

Aux1 Circuit breaker auxiliary contact (make)

Aux2 Circuit breaker auxiliary contact (break)

U_{CTR} Control voltage (trip voltage)

U_{BI} Input voltage of binary input

U_R Voltage across the Bypass resistor

R Bypass resistor

This results in an upper limit for the resistance dimension, R_{max} and a lower limit R_{min}, from which the optimal value of the arithmetic mean R should be selected:

$$R = \frac{R_{max} + R_{min}}{2}$$

In order that the minimum voltage for controlling the binary input is ensured, R_{max} is derived as:

$$R_{max} = \left(\frac{U_{CRT} - U_{BI\ min}}{I_{BI\ (High)}}\right) - R_{CBTC}$$

So the circuit breaker trip coil does not remain energized in the above case, R_{min} is derived as:

$$R_{min} = R_{TC} = \left(\frac{U_{CTR} - U_{TC\ (LOW)}}{U_{TC\ (LOW)}}\right)$$

$I_{BI\ (HIGH)}$	Constant Current with BI on (= 1.7 mA)
$U_{BI\ min}$	Minimum control voltage for BI (= 19 V for delivery setting for nominal voltage of 24/48/60 V; 73 V for delivery setting for nominal voltage of 110/125/220/250 V)
U_{CTR}	Control voltage for trip circuit

R_{CBTC} DC resistance of circuit breaker trip coil

$U_{CBTC\ (LOW)}$ maximum voltage on the circuit breaker trip coil that does not lead to tripping

If the calculation results in $R_{max} < R_{min}$, then the calculation must be repeated with the next lower switching threshold U_{BI} min, and this threshold must be implemented in the relay using plug-in jumpers.

For the power consumption of the resistor the following applies:

$$P_R = I^2 \cdot R = \left(\frac{U_{CTR}}{R + R_{CBTC}}\right)^2 \cdot R$$

Example

$I_{BI\ (HIGH)}$ 1.7 mA (SIPROTEC 4 device 7UT613/63x)

$U_{BI\ min}$ 19 V for delivery setting for nominal voltages of 24/48/60 V (SIPROTEC 4 device 7UT613/63x)

73 V for delivery setting for nominal voltages of 110/125/220/250 V (SIPROTEC 4 device 7UT613/63x)

U_{CTR} 110 V (from system / trip circuit)

R_{TC} 500 Ω (system / trip circuit)

$U_{CBTC\ (LOW)}$ 2 V (from system / trip circuit)

$$R_{max} = \left(\frac{110\ V - 19\ V}{1.7\ mA}\right) - 500\ \Omega$$

$$R_{max} = 53\ k\Omega$$

$$R_{min} = 500\ \Omega \cdot \left(\frac{110\ V - 2\ V}{2\ V}\right)$$

$$R_{min} = 27\ k\Omega$$

$$R = \frac{R_{max} + R_{min}}{2} = 40\ k\Omega$$

The closest standard value of 39 kΩ is selected; the power is:

$$P_R = \left(\frac{110\ V}{39\ k\Omega + 0.5\ k\Omega}\right)^2 \cdot 39\ k\Omega$$

$$P_R \geq 0.3\ W$$

RTD-Box

If the overload protection operates with processing of the coolant temperature (overload protection with hot-spot calculation), one or two RTD boxes 7XV5662-xAD can be connected to the serial service interface at port C.

3.1.2 Hardware Modifications

3.1.2.1 General

Hardware modifications concerning, for instance, nominal currents, the control voltage for binary inputs or termination of serial interfaces might be necessary. Follow the procedure described in this subsection, whenever hardware modifications are done.

Auxiliary Voltage

There are different input ranges for the power supply voltage (refer to the data ordering information in the Appendix). The power supplies with the ratings 60/110/125 VDC and 110/125/220/250 VDC / 115/230 VAC are interconvertible. Jumper settings determine the rating. The assignment of these jumpers to the supply voltages and their physical location on the PCB are described below under „CPU Processor Board“. When the device is delivered, these jumpers are set according to the name-plate sticker and generally need not be altered.

Rated Currents

Jumper settings determine the rating of the current input transducers of the device. The position of jumpers are set according to the name-plate sticker to 1 A or 5 A.

If the current transformer sets at the measuring locations and/or the 1-phase measurement inputs have different secondary rated currents, this must be adapted in the device. The same applies for the current transformers of the various busbar feeders when single-phase busbar protection is applied. Using single-phase busbar protection with interposing summation transformers, the rated currents are usually 100 mA.

The physical arrangements of these jumpers that correspond to the different current ratings are described below under margin heading „Input/Output Board C–I/O-2“, „Input/Output Board C–I/O-9 (all versions)“ and „Input/Output Board C–I/O-9 (only 7UT635)“.

When performing changes, please make sure that the device is always informed about them:

- Using three-phase applications and single-phase transformers, check the current transformer data for the three-phase measuring locations, see Section 2.1.4 under margin heading „Current Transformer Data for Three-phase Measuring Locations“.
- Using three-phase applications and single-phase transformers, check the current transformer data for the auxiliary single-phase measuring locations, see Section 2.1.4 under margin heading „Current Transformer Data for Auxiliary Single-phase Measuring Locations“.
- In case of changes regarding the sensitive 1-phase auxiliary inputs, check the CT ratios - refer to the paragraph 2.1.4 under margin heading „Current Transformer Data for Single-phase Auxiliary Inputs“.
- Using single-phase busbar protection, changes for the different measuring locations must correspond to the associated current transformer data (refer to subsection 2.1.4 under margin heading „Current Transformer Data for Single-Phase Busbar Protection“.

Control Voltage for Binary Inputs

When the device is delivered from the factory, the binary inputs are set to operate with a voltage that corresponds to the rated DC voltage of the power supply. In general, to optimize the operation of the inputs, the pick-up voltage of the inputs should be set to most closely match the actual control voltage being used.

To change the switching threshold of a binary input, one jumper must be changed for each input. The physical arrangement of the binary input jumpers in relation to the pickup voltages is explained below under margin headings „Processor Board C-CPU-2“ and „Input/Output Board(s) C-I/O-1 and C-I/O-10“.



Note

If binary inputs are used for trip circuit supervision, note that two binary inputs (or a binary input and a substitute resistor) are connected in series. The switching threshold must lie clearly below half of the nominal control voltage.

Contact Mode for Binary Outputs

Some input/output modules can have relays which can be set to have either NO or NC contacts. To do so a jumper location must be changed. For which relays on which boards this is valid can be found in the following sections under “Switching Elements on Printed Circuit Boards”.

Replacing Interface Modules

The serial interface modules can be replaced. For details please refer to the section „Interface Modules“.

Terminating Serial Interfaces

If the device is equipped with a serial RS485 port, the RS485 bus must be terminated with resistors at the last device on the bus to ensure reliable data transmission. For this purpose, terminating resistors are provided on the interface board and on the interface modules, which can be connected with jumpers. The physical arrangement and jumper positions on the interface module are described below under margin heading „RS485 Interface“.

Spare parts

Spare parts may be the backup battery that maintains the data in the battery-buffered RAM when the voltage supply fails, and the miniature fuse of the internal power supply. Their physical location is shown in the illustration of the processor board.

The ratings of the fuse are printed on the board next to the fuse itself (also see table 3-2).

When exchanging the fuse, please observe the hints given in the SIPROTEC System Manual /1/ in the section „Maintenance“.

3.1.2.2 Disassembly

Disassembly of the Device



Note

It is assumed for the following steps that the device is not operative.

Work on the Printed Circuit Boards



Caution!

Caution when changing jumper settings that affect nominal values of the device:

As a consequence, the ordering number (MLFB) and the ratings on the name plate no longer match the actual device properties.

Where such changes are necessary in exceptional cases, they MUST be marked clearly and visibly on the device. Self-adhesive stickers are available that can be used as supplementary name plate.

To perform work on the printed circuit boards, such as checking or moving switching elements or exchanging modules, proceed as follows:

- Prepare your workplace: prepare a suitable underlay for electrostatically sensitive devices (ESD). Also the following tools are required:
  - screwdriver with a 5 to 6 mm wide tip,
  - a crosstip screwdriver for Pz size 1,
  - a 5 mm socket wrench.
- Unfasten the screw-posts of the D-subminiature connectors on the back panel at location „A“ and „C“. This activity does not apply if the device is for surface mounting.
- If the device has additional communication interfaces (to „A“,and „C“) at the locations „B“ and/or „D“ on the rear, the screws located diagonally to the interfaces must be removed. This activity does not apply if the device is for surface mounting.
- Remove the covers on the front panel and loosen the screws which can then be accessed.
- Carefully take off the front cover.

Work on the Plug Connectors



Caution!

Mind electrostatic discharges:

Non-observance can result in minor personal injury or property damage.

In order to avoid electrotrastic discharges when handling with plug connectors first touch an earthed metal surface .

Do not plug or unplug interface connectors under voltage!

The arrangement of the boards for the different housing sizes can be seen in the following figures.

When performing work on plug connectors, proceed as follows:

- Disconnect the ribbon-cable between the front cover and the C–CPU-2 (1) board. To disconnect the cable, push up the top latch of the plug connector and push down the bottom latch of the plug connector. Carefully set aside the front cover.
- Disconnect the ribbon cables between the C-CPU-2 (1) board and the I/O boards (2 to 4, depending on version).
- Remove the boards and set them on the grounded mat to protect them from ESD damage. In the case of the device variant for panel surface mounting, please be aware of the fact that a certain amount of force is required in order to remove the C-CPU-2 module due to the existing plug connectors.
- Check the jumpers in accordance with the figures and information provided below, and as the case may be change or remove them.

Module Arrangement 7UT613/63x

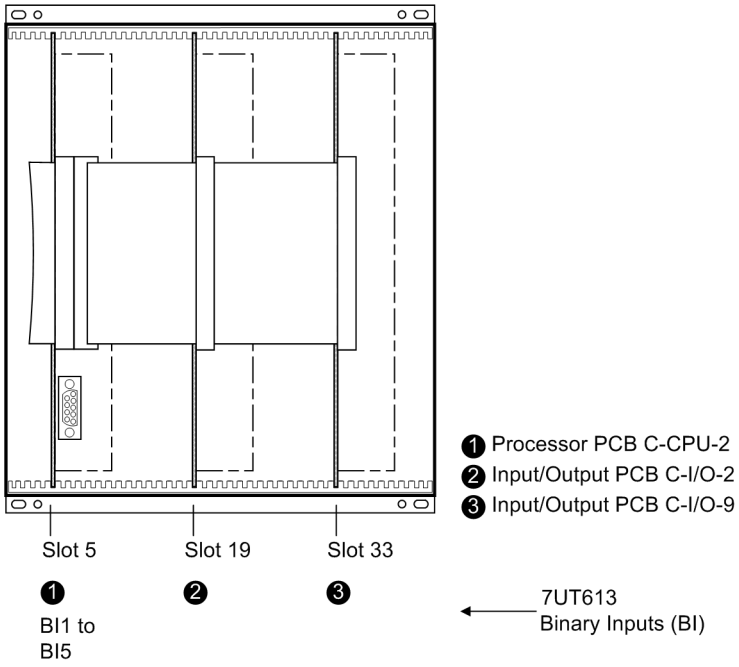

Figure 3-3 Front view with housing size $^1/_2$ after removal of the front panel (simplified and scaled down)

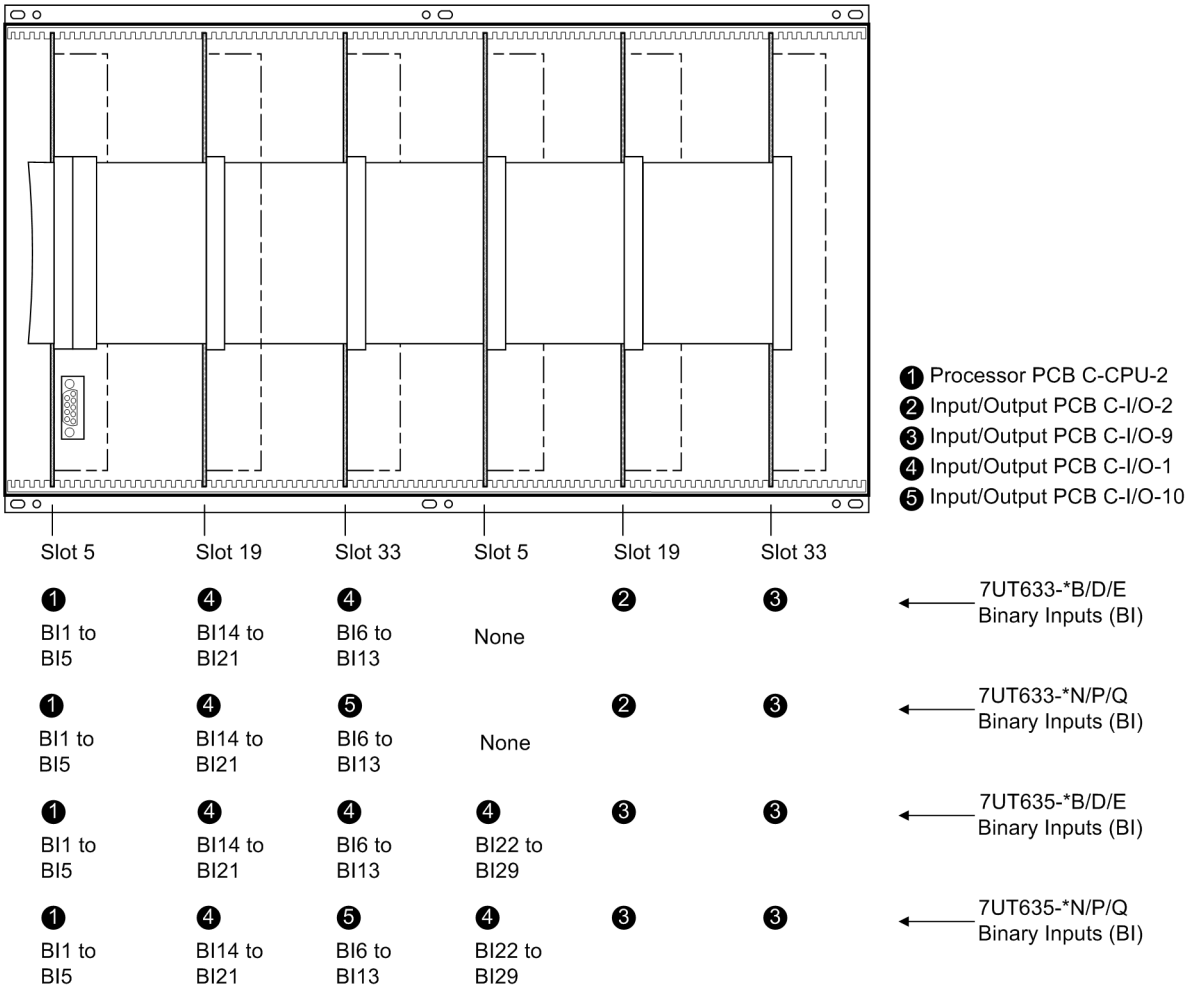

Figure 3-4 Front view with housing size 1/1 after removal of the front panel (simplified and scaled down)

3.1.2.3 Switching Elements on Printed Circuit Boards

Processor Module C-CPU-2

The following figure illustrates the layout of the PCB. Check the set rated voltage of the integrated power supply, the selected control voltages of binary inputs BI1 to BI5, the quiescent state of the life contact and the type of the integrated RS232/RS485 interface using the the tables below. Before checking the integrated RS232/RS485 interface, it may be necessary to remove the interface modules mounted on top of it.

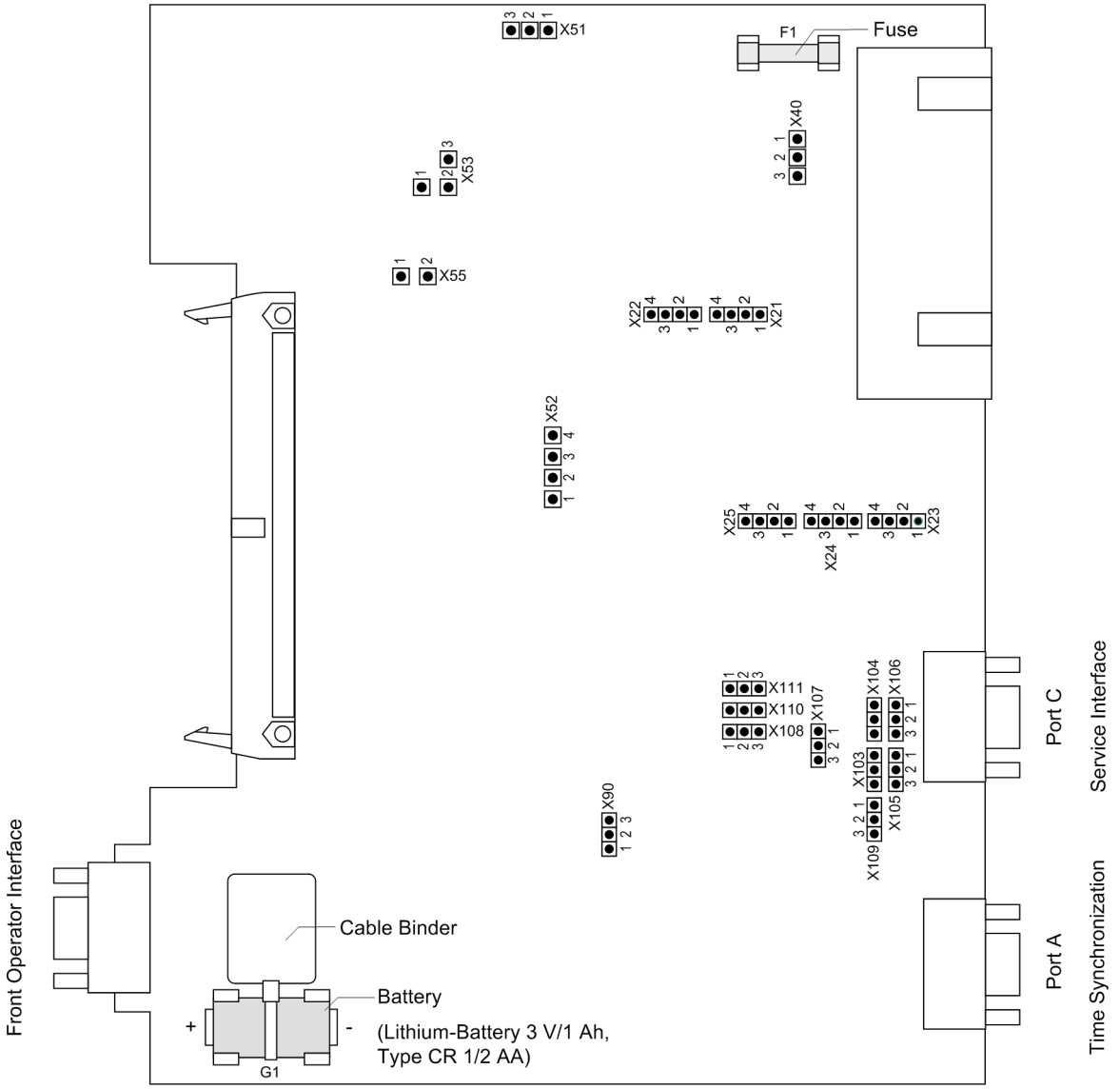

Figure 3-5 Processor board C–CPU–2 (without interface modules) with representation of the jumpers required for checking the settings

Table 3-2 Jumper settings of the rated voltage of the integrated **Power Supply** on the C-CPU-2 processor board

Jumper	Nominal voltage			
	24 to 48 VDC	**60 to 125 VDC**	**110 to 250 VDC, 115 to 230 VAC**	**220 to 250 VDC, 115 to 230 VAC**
X51	Not used	1-2	2-3	2-3
X52	Not used	1-2 and 3-4	2-3	2-3
X53	Not used	1-2	2-3	2-3
X55	Not used	not used	1-2	1-2
	Cannot be changed	Interchangeable		
Fuse	T4H250V	T2H250V		

Table 3-3 Jumper setting of the **pickup voltages** of the binary inputs BI1 to BI5 on the C-CPU-2 processor module

Binary Inputs	Jumper	Threshold 19 V [1)]	Threshold 73 V [2)]	Threshold 154 V [3)]
BI1	X21	1-2	2-3	3-4
BI2	X22	1-2	2-3	3-4
BI3	X23	1-2	2-3	3-4
BI4	X24	1-2	2-3	3-4
BI5	X25	1-2	2-3	3-4

1) Factory settings for devices with rated power supply voltage 24 to 125 VDC
2) Factory settings for devices with rated power supply voltage 110 to 250 VDC and 115 to 230 to 250 VAC
3) Only for control voltage 200 VDC or 250 VDC

Table 3-4 Jumper setting of the quiescent state of the **Life Contact** on the processor board C-CPU-2

Jumper	Open in the quiescent state	Closed in the quiescent state	Presetting
X40	1-2	2-3	2-3

By repositioning jumpers the interface RS485 can be modified into a RS232 interface and vice versa.

Jumpers X105 to X110 must be set to the same position.

Table 3-5 Jumper settings of the integrated **RS232/RS485 Interface** on the C-CPU-2 processor board

Jumper	RS232	RS485
X103 and X104	1-2	1-2
X105 to X110	1-2	2-3

The jumpers are preset at the factory according to the configuration ordered.

With interface RS232 jumper X111 is needed to activate CTS which enables the communication with the modem.

Table 3-6 Jumper setting for **CTS** (**C**lear **T**o **S**end, flow control) on the C-CPU-2 processor board

Jumper	/CTS from interface RS232	/CTS triggered by /RTS
X111	1-2	2-3 [1)]

[1)] Delivery state

Jumper setting 2-3: The connection to the modem is usually established with a star coupler or fibre-optic converter. Therefore the modem control signals according to RS232 standard DIN 66020 are not available. Modem signals are not required since the connection to the SIPROTEC 4 devices is always operated in the half-duplex mode. Please use the connection cable with order number 7XV5100-4.

Jumper setting 1-2: This setting makes the modem signals available, i. e. for a direct RS232-connection between the SIPROTEC 4 device and the modem this setting can be selected optionally. We recommend to use a standard RS232 modem connection cable (converter 9-pin to 25-pin).



Note

For a direct connection to DIGSI with interface RS232 jumper X111 must be plugged in position 2-3.

If there are no external terminating resistors in the system, the last devices on a RS485 bus must be configured via jumpers X103 and X104.

Table 3-7 Jumper settings of the **Terminating Resistors** of the RS485 interface on the C-CPU-2 processor board

Jumper	Terminating resistor closed	Terminating resistor open	Presetting
X103	2-3	1-2	1-2
X104	2-3	1-2	1-2

Note: Both jumpers must always be plugged in the same way!

When the device is delivered from the factory, the terminating resistors are disconnected (jumper setting 1-2).

The terminating resistors can also be connected externally (e.g. to the connection module as illustrated in Figure 3-15). In that case the terminating resistors provided on the C-CPU-2 processor board must be switched off.

Jumper X90 has no function. The factory setting is 1-2.

Input/Output Board(s) C-I/O-1 and C-I/O-10 (only 7UT633 and 7UT635)

The PCB layout for the C-I/O-1 input/output board is shown in Figure 3-6 and the input/output group C-I/O-10 as from release 7UT6../EE in Figure 3-7.

The input/output board C-I/O-1 is only available in the versions 7UT633 and 7UT635.

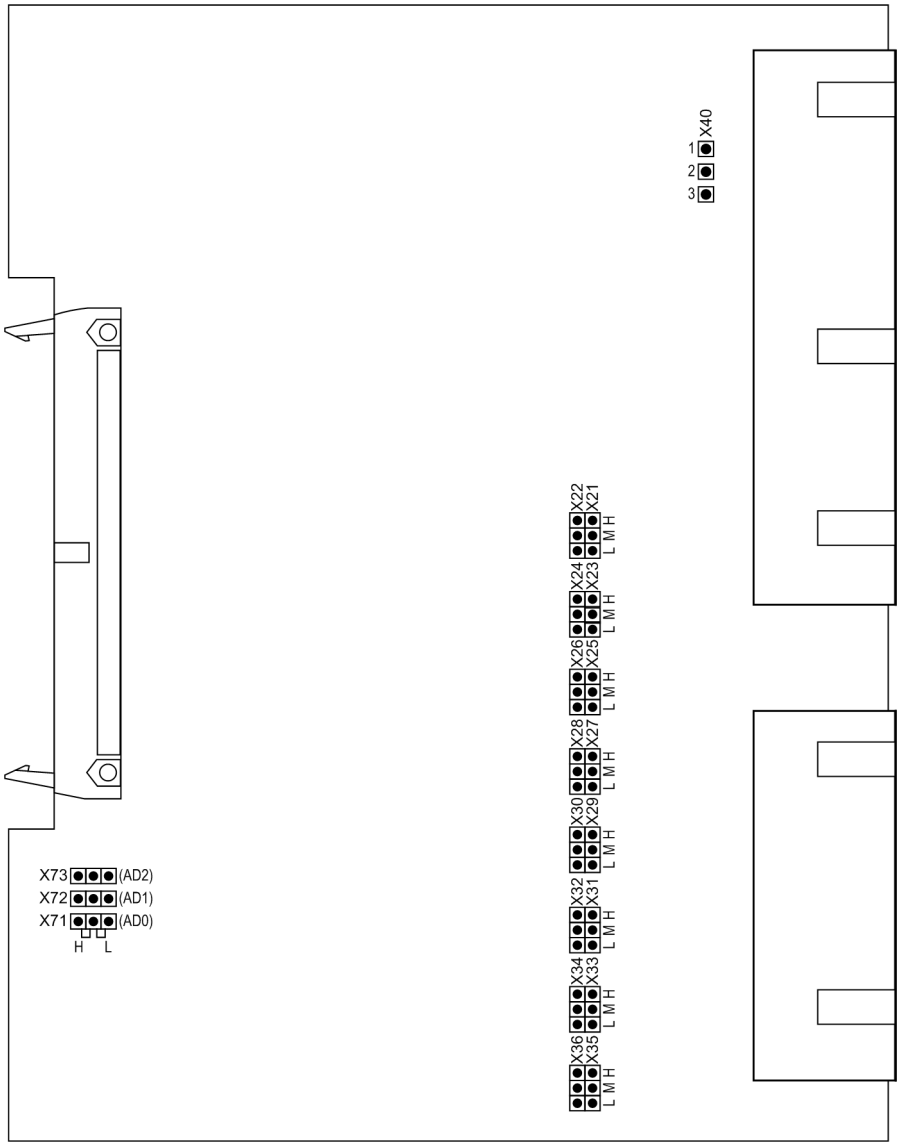

Figure 3-6 C-I/O-1 input/output boards with representation of jumper settings required for checking configuration settings

For 7UT633 and 7UT635 as from release EE, a further C-I/O-1 or C-I/O-10 can be available at slot 33 (depending on the version).

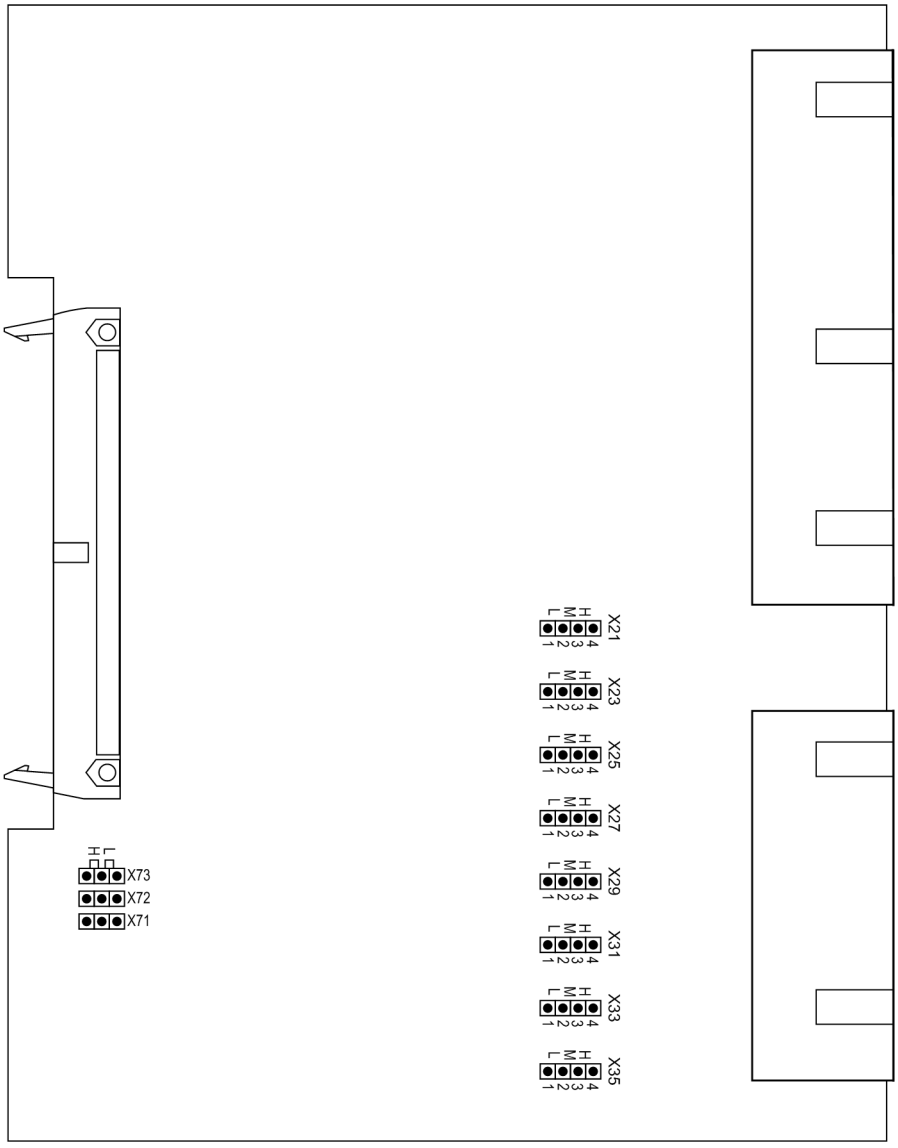

Figure 3-7 Input/output board C-I/O-10 release 7UT613/63x.../EE or higher, with representation of jumper settings required for checking configuration settings

Some of the output contacts can be changed from NO (normally open) operation to NC (normally closed) operation (refer also to the Appendix, Section A.2).

For 7UT633 versions this applies for the binary outputs BO9 and BO17 (Figure 3-4, slot 33 left side and slot 19 left side).

For 7UT635 this applies for the binary outputs BO1, BO 9 and BO17 (Figure 3-4, slot 5 right side, slot 33 left side and slot 19 left side).

Table 3-8 Jumper settings of the **contact type of relays** of the binary outputs BO1, BO9 and BO17 on the input/output boards C-I/O-1

Device	Module	For	Jumper	Quiescent State open (close)	Quiescent State closed (open)	Default Position
7UT633	Slot 33 left side	BO9	X40	1-2	2-3	1-2
	Slot 19 left side	BO17	X40	1-2	2-3	1-2
7UT635	Slot 5 right side	BO1	X40	1-2	2-3	1-2
	Slot 33 left side	BO9	X40	1-2	2-3	1-2
	Slot 19 left side	BO17	X40	1-2	2-3	1-2

The pickup voltages of the binary inputs BI6 through BI29 are checked according to the following table

Table 3-9 Jumper settings of the **pickup voltages** of the binary inputs BI6 through BI29 on the input/output board C-I/O-1 or C-I/O-10

Binary inputs			Jumpers on C-I/O-1 and C-I/O-10	Jumpers on C-I/O-10 up release EE or higher	Threshold 17 V[2])	Threshold 73 V[3])	Threshold 154 V[4])
Slot 33 left side	Slot 19 left [1])	Slot 5 right [1])					
BI6	BI14	BI22	X21/X22	X21	L	M	H
BI7	BI15	BI23	X23/X24	X23	L	M	H
BI8	BI16	BI24	X25/X26	X25	L	M	H
BI9	BI17	BI25	X27/X28	X27	L	M	H
BI10	BI18	BI26	X29/X30	X29	L	M	H
BI11	BI19	BI27	X31/X32	X31	L	M	H
BI12	BI20	BI28	X33/X34	X33	L	M	H
BI13	BI21	BI29	X35/X36	X35	L	M	H

1) Only for C-I/O-1
2) Factory settings for devices with power supply voltages 24 VDC to 125 VDC
3) Factory settings for devices with power supply voltages of 110 VDC to 250 VDC and 115 VAC
4) Factory settings for devices with power supply voltages of 220 VDC to 250 VDC and 115 VAC

The jumpers X71 through X73 serve for setting the bus address. Their position may not be changed. The following tables list the jumper presettings.

Table 3-10 Jumper settings of the **module addresses** of the input/output boards C-I/O-1 and C-I/O-10

Jumper	Mounting Location		
	Slot 19 left side	Slot 33 left side	Slot 5 right side
X71	H	L	H
X72	L	H	H
X73	H	L	H

Input/Output Board C-I/O-2 (only 7UT613 and 7UT633)

The input/output board C-I/O-2 is available only in 7UT613 and 7UT633. Mounting location: for 7UT613 slot 19, for 7UT633 slot 19 right side

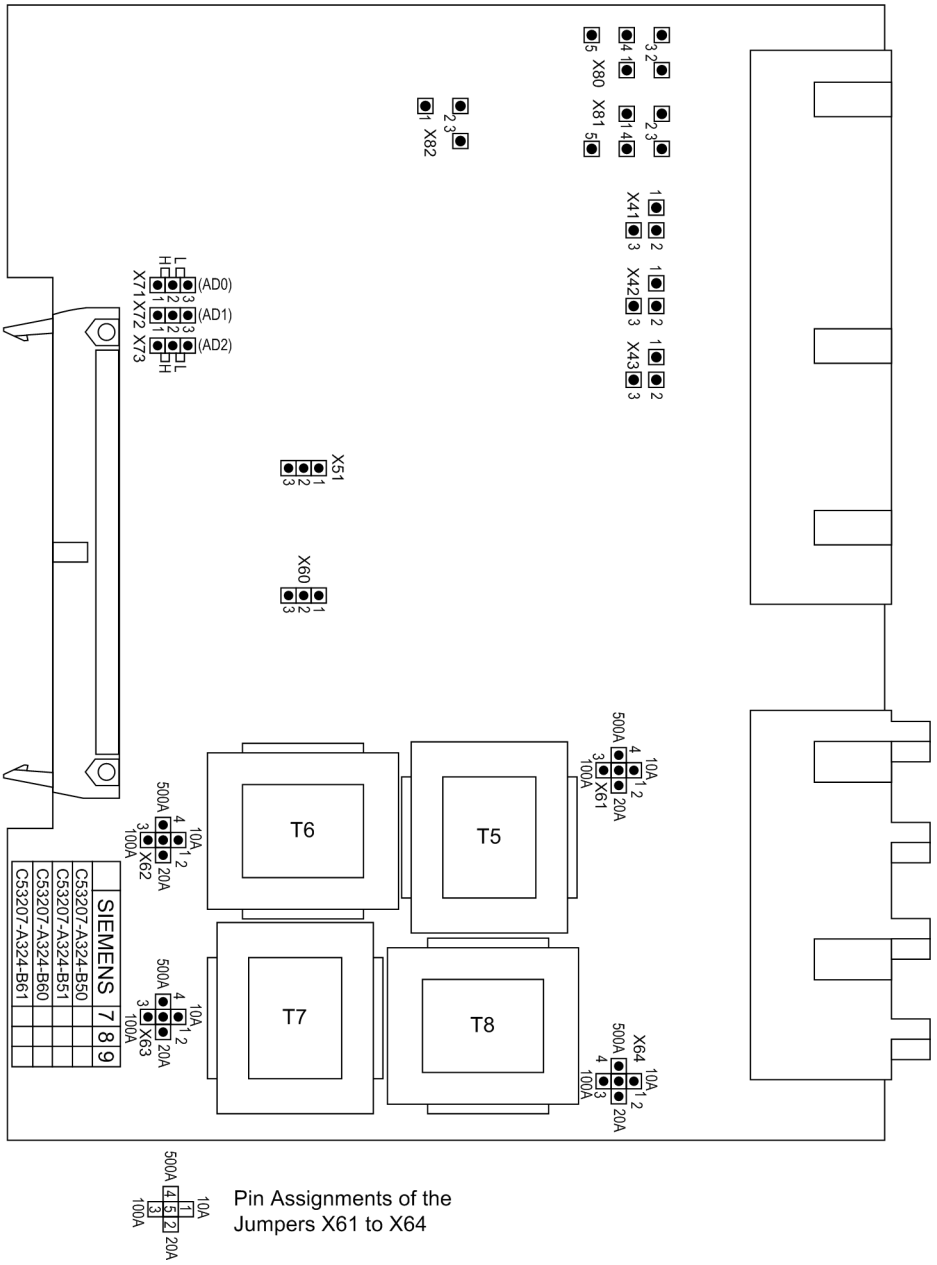

Figure 3-8 C-I/O-2 input/output board release 7UT613/63x .../EE or higher, with representation of jumper settings required for checking configuration settings

The relay contacts of the binary outputs BO6 to BO8 can be changed from NO (normally open) to NC (normally closed) operation (refer also to Appendix A.2).

Table 3-11 Jumper setting for the **contact type** of the relay for BO6 to BO8

for	Jumper	Quiescent state open (close) [1]	Quiescent state closed (open)
BO6	X41	1-2	2-3
BO7	X42	1-2	2-3
BO8	X43	1-2	2-3

[1] Delivery state

The relay contacts for binary outputs BO1 through BO5 can be connected to common potential, or configured individually for BO1, BO4 and BO5 (BO2 and BO3 are without function in this context) (see also General Diagrams in the Appendix A.2).

Table 3-12 Jumper settings for the configuration of the **common potential** of BO1 through BO5 or for configuration of BO1, BO4 and BO5 as **single relays**

Jumper	BO1 to BO5 connected to common potential [1]	BO1, BO4, BO5 configured as single relays (BO2 and BO3 without function)
X80	1-2, 3-4	2-3, 4-5
X81	1-2, 3-4	2-3, 4-5
X82	2-3	1-2

[1] Delivery state

Jumpers X71 through X73 on the input/output board C-I/O-2 serve for setting the bus address. Their position may not be changed. The following table shows the preset jumper positions.

Table 3-13 Jumper Position of the **Module Addresses** of the input/output board C-I/O-2

Jumper	Presetting
X71	1-2 (H)
X72	1-2 (H)
X73	2-3 (L)

The **rated currents** of the measured current inputs can be determined for each analogue input via jumpers. With default settings all jumpers are set to the same rated current (according to the order number of the device).

The input/output board C-I/O-2 carries the following measured current inputs:

- For 3-phase applications and 1-phase transformers:

  There are 3 measuring inputs for the three-phase measuring location M3: I_{L1M3}, I_{L2M3}, I_{L3M3}. The jumpers X61, X62, X63 belonging to this measuring location must be plugged all to the rated secondary current of the connected current transformers: „1A “or „5A“. Furthermore, the corresponding common jumpers (X51 and X60) have to be plugged to the same rated current.

- For 1-phase busbar protection:

  There are 3 measuring inputs for 3 different measuring locations, i.e. the feeders 7 to 9: I_7, I_8, I_9. Each input can be set individually (X61, X62, X63) to „1A“, „5A“ or „0.1A“. Only if the measuring inputs I7 to I9 have the same rated current, the common jumpers X60 are plugged to this rated current.

  If different rated currents (X51 and X60) are reigning within the input group, the position of the common jumpers (X51 and X60) is irrelevant.

- For the additional single-phase measuring input I_{X2}:

  Jumper X64 is set to the required rated current for this 1-phase current input: „1A“ or „5A“.

Table 3-14 Jumper setting for **nominal current** or **measuring range**

Jumper	**Nominal current 0.1 A** **Measuring range 10 A**	**Nominal current 1 A** **Measuring range 100 A**	**Nominal current 5 A** **Measuring range 500 A**
X51	2-3	1-2	1-2
X60	1-2	1-2	2-3
X61	1-5	3-5	4-5
X62	1-5	3-5	4-5
X63	1-5	3-5	4-5
X64	1-5	3-5	4-5

Input/Output Board C-I/O-9 (all models)

The input/output board C-I/O-9 is used in the versions 7UT613, 7UT633 and 7UT635.
Mounting location: for 7UT613 slot 33, for 7UT633 and 7UT635 slot 33 right side

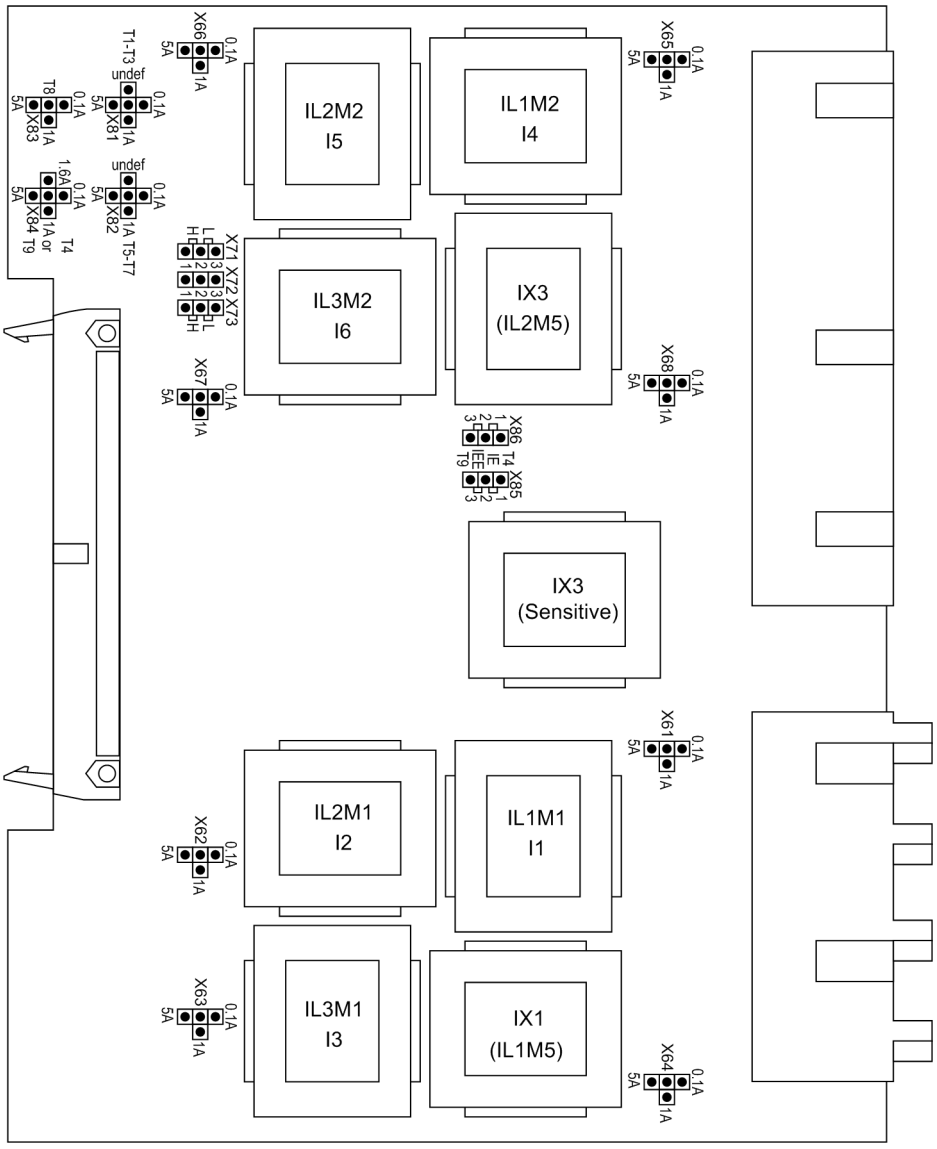

Figure 3-9 Input/output boards with representation of the jumpers required for checking the settings

Jumpers X71 through X73 serve for module identification and must not be changed. The following table shows the preset jumper positions.

Table 3-15 Jumper settings of the **module addresses** of input/output boards C-I/O-9; slot 33 in 7UT613 or slot 33 right in 7UT633 and 7UT635

Jumper	7UT613	7UT633 and 7UT635
	Slot 33	Slot 33 right side
X71	2-3 (L)	2-3 (L)
X72	1-2 (H)	1-2 (H)
X73	2-3 (L)	2-3 (L)

The **rated currents** of the measured current inputs can be determined for each analog input. With default settings all jumpers are set to the same rated current (according to the order number of the device).

The measuring inputs available depend on the intended use and the device variant. For the above slots, the following applies to all devices:

- For 3-phase applications and 1-phase transformers:

  There are 3 measuring inputs for each of the three-phase measuring locations M1 and M2: I_{L1M1}, I_{L2M1}, I_{L3M1}, I_{L1M2}, I_{L2M2}, I_{L3M2}.

  The jumpers belonging to measuring location M1 (X61, X62, X63) must all be plugged to the rated secondary current of the connected current transformers: „1A “or „5A“). Furthermore, the corresponding common jumper (X82) has to be plugged to the same rated current.

  The jumpers belonging to measuring location M2 (X65, X66, X67) must all be plugged to the rated secondary current of the connected current transformers: „1A “or „5A“). Furthermore, the corresponding common jumper (X81) has to be plugged to the same rated current.

- For 3-phase applications in 7UT635:

  The single-phase auxiliary current inputs I_{X1} and I_{X3} can be used for the fifth three-phase measuring location M5. In this case set the jumpers X64, X68, X83 and X84 all to the required secondary rated current for M5: „1A“ or „5A“.

  Set X85 and X86 to position 1-2.

- For 1-phase busbar protection:

  There are 6 measuring inputs for 6 different measuring locations, i.e. the feeders 1 to 6: I_1, I_2, I_3, I_4, I_5, I_6. Each input can be set individually (X61, X62, X63, X65, X66, X67): „1A“ or „5A“ or „0.1A“.

  Only if the measuring inputs I_1 to I_3 have the same rated current is X81 plugged to this rated current.

  Only if the measuring inputs I_4 to I_6 have the same rated current is X82 plugged to this rated current.

  If different rated currents reign within the input groups, will the corresponding jumper be plugged to „undef“.

  For interposed summation transformers with 100 mA output, jumpers of all measuring inputs, including the common jumpers, are plugged to „0.1A“.

- For the single-phase auxiliary measuring input I_{X1}:

  Jumpers X64 and X83 are both set to the required rated current in accordance with the connected current transformer: „1A“ or „5A“.

  But: If in 7UT635 this input is used for a fifth three-phase measuring location M5, the jumpers must be set (as mentioned above) to the secondary rated current of that measuring location.

- For the single-phase auxiliary measuring input I_{X3}:

  If this input is used as a „normal“ 1-phase current input, set jumpers X68 and X84 both to the required rated secondary current: „1A“ or „5A“. Set X85 and X86 both to position 1-2.

  If this input is used as a „high-sensitivity“ current input, jumper X68 is irrelevant. Set X84 to „1.6A“. Set X85 and X86 both to position 2-3.

  But: If in 7UT635 this input is used for a fifth 3-phase measuring location M5, set the jumpers to this rated secondary current (see above). X85 and X86 must then be set to position 1-2.

Table 3-16 gives a summary of the jumpers for the rated currents on C–I/O-9.

Table 3-16 Assignment of the jumpers for the **rated currents** to the measured current inputs

Application		**Jumpers**	
3-phase	**1-phase**	**individual**	**common**
I_{L1M1}	I1	X61	X82
I_{L2M1}	I2	X62	
I_{L3M1}	I3	X63	
I_{L1M2}	I4	X65	X81
I_{L2M2}	I5	X66	
I_{L3M2}	I6	X67	
I_{X1} (I_{L1M5}) [1])	—	X64	X83
I_{Z1} (I_{L2M5}) [1])	—	X68	X84/X85/X86
I_{Z3} (sensitive)	—	—	

[1]) IN-01 in 7UT635 applicable for measuring location M5

Input/Output Board C-I/O-9 (only 7UT635)

7UT635 contains a second board C-I/O-9. Mounting location: Slot 19 right side

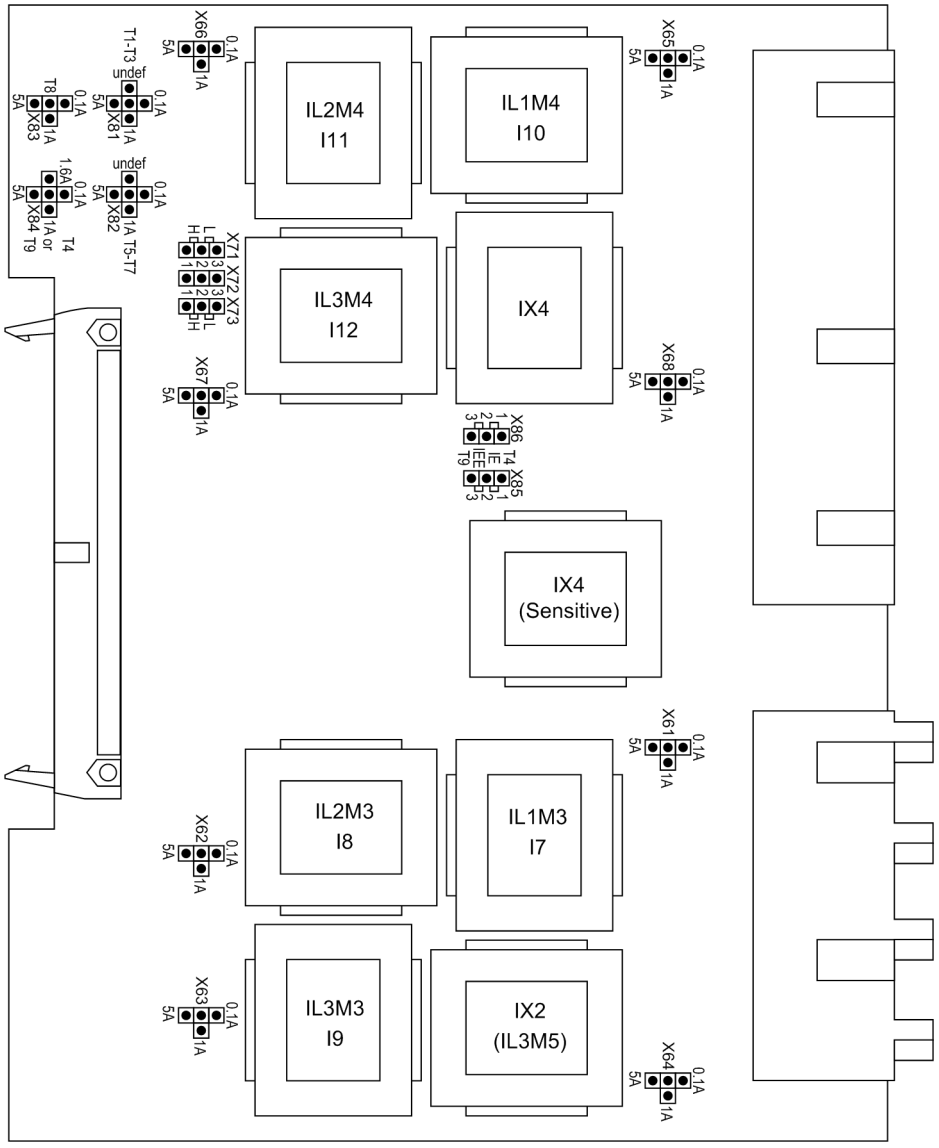

Figure 3-10 Input/output boards with representation of the jumpers required for checking the settings

Jumpers X71 through X73 on the input/output board C-I/O-9 serve for setting the bus address. Their position may not be changed. The following table shows the preset jumper positions.

Table 3-17 Jumper position of module addresses of input/output boards C-I/O-9, slot 19 right in 7UT635

Jumper	7UT635
	Slot 19 right side
X71	1-2 (H)
X72	1-2 (H)
X73	2-3 (L)

The **rated currents** of the measured voltage inputs can be set for each input transformer by jumpers on the PCB. With default settings all jumpers are set to the same rated current (according to the order number of the device).

- For 3-phase applications and 1-phase transformers:

  There are 3 measuring inputs for each of the three-phase measuring locations M3 and M4: I_{L1M3}, I_{L2M3}, I_{L3M3}, I_{L1M4}, I_{L2M4}, I_{L3M4}.

  The jumpers belonging to measuring location M3 (X61, X62, X63) must all be plugged to the rated secondary current of the connected current transformers: „1A “or „5A“). Furthermore, the corresponding common jumper (X82) has to be plugged to the same rated current.

  The jumpers belonging to measuring location M4 (X65, X66, X67) must all be plugged to the rated secondary current of the connected current transformers: „1A “or „5A“. Furthermore, the corresponding common jumper (X81) has to be plugged to the same rated current.

- For 3-phase applications in 7UT635:

  The auxiliary current input I_{Z2} can be used for a fifth 3-phase measuring location M5. In this case set the jumpers X64 and X83 both to the required rated secondary current for M5: „1A“ or „5A“.

- For 1-phase busbar protection:

  There are 6 measuring inputs for 6 different measuring locations, i.e. the feeders 7 to 12: I_7, I_8, I_9, I_{10}, I_{11}, I_{12}. Each input can be set individually to „1A“ or „5A“ or „0.1A“ (X61, X62, X63, X65, X66, X67).

  Only if measuring inputs I_7 to I_9 have the same rated current, will the common jumper X82 be plugged to this current

  Only if measuring inputs I_{10} to I_{12} have the same rated current, will the common jumper X81 be plugged to this current.

  If different rated currents reign within the input groups, will the corresponding jumper be plugged to „undef“.

  For interposed summation transformers with 100 mA output, jumpers of all measuring inputs, including the common jumpers, are plugged to „0.1A“.

- For the single-phase auxiliary measuring input I_{Z2}:

  Jumper X64 and X83 are both set to the required rated secondary current for this single-phase current input: „1A“ or „5A“.

  But: If in 7UT635 this input is used for a fifth three-phase measuring location M5, the jumpers must be set (as mentioned above) to the secondary rated current of that measuring location.

- For the single-phase auxiliary measuring input I_{X4}:

  If this input is used as a „normal“ 1-phase current input, set jumpers X68 and X84 both to the required rated secondary current: „1A “ or „5A“. Set X85 and X86 both to position 1-2.

  If this input is used as a „high-sensitivity“ single-phase current input, jumper X68 is irrelevant. Set X84 to„1.6A“. Set X85 and X86 both to position 2-3.

Table 3-18 gives a summary of the jumpers for the rated currents on C–I/O-9.

Table 3-18 Assignment of jumpers for the rated current to the measuring inputs

Application		Jumpers	
3-phase	1-phase	individual	common
I_{L1M3}	I_7	X61	X82
I_{L2M3}	I_8	X62	
I_{L3M3}	I_9	X63	
I_{L1M4}	I_{10}	X65	X81
I_{L2M4}	I_{11}	X66	
I_{L3M4}	I_{12}	X67	
I_{X2} (I_{L3M5}) [1)]	—	X64	X83
I_{Z4}	—	X68	X84/X85/X86
I_{Z4} (sensitive)	—	—	

[1)] in 7UT635 applicable for measuring location M5

3.1.2.4 Interface Modules



Note

Surface mounted devices with fibre optics connection have their fibre optics module fitted in the inclined housing on the case bottom. The CPU module has there instead an RS232 interface module which communicates electrically with the FO module in the inclined housing.

Exchanging Interface Modules

The interface modules are dependent on the variant ordered. They are located on the processor board C-CPU-2.

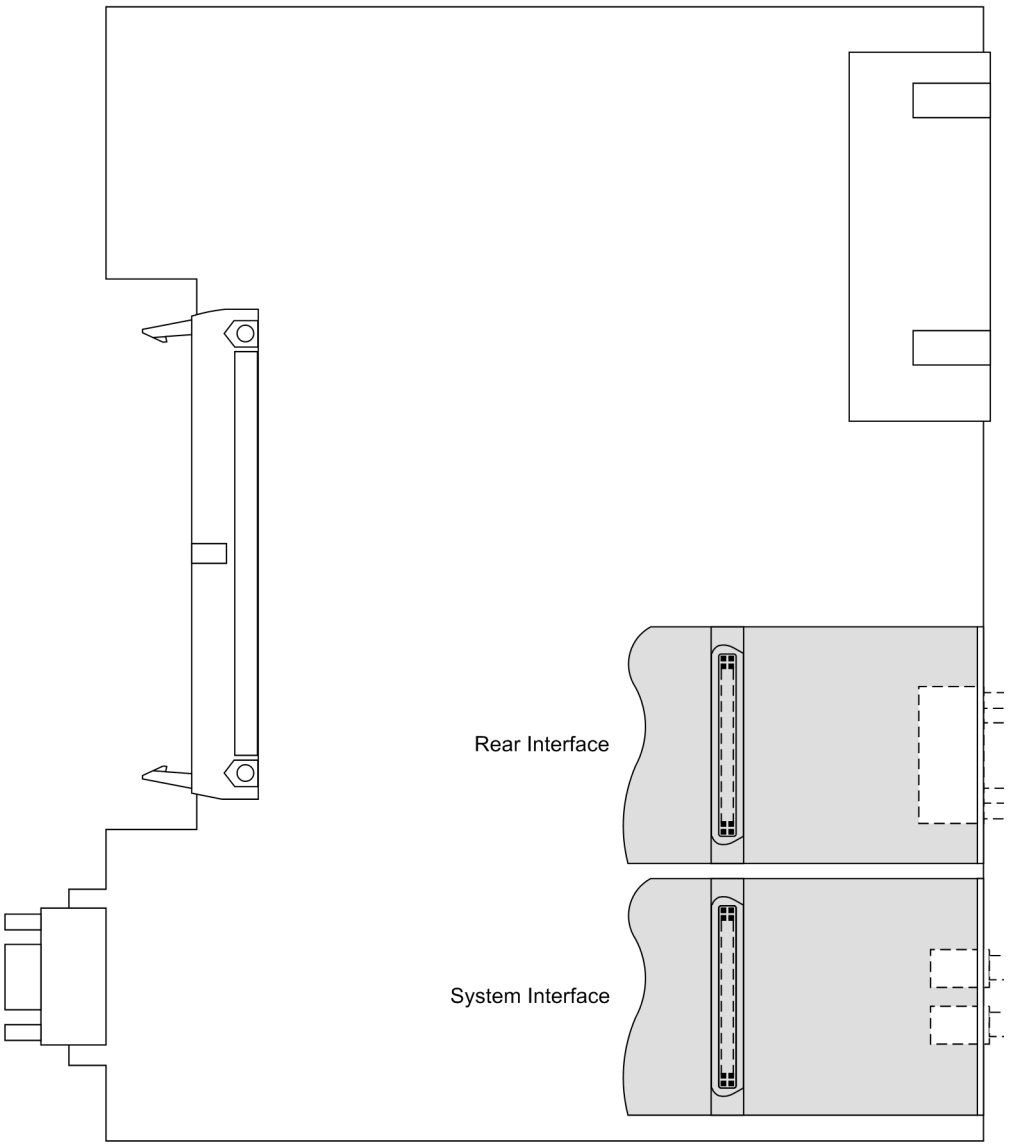

Figure 3-11 C-CPU-2 board with interface modules

Note

Please note the following: Only interface modules of devices with flush mounting housing can be replaced. Interface modules of devices with surface mounting housing must be replaced in our manufacturing centre.

Use only interface modules that can be ordered as an option of the device (see also Appendix A.1).

Termination of the serial interfaces in case of RS485 must be ensured.

Table 3-19 Exchange Interface Modules

Interface	Mounting location / port	Exchange module
System Interface	B	RS232
		RS485
		FO 820 nm
		PROFIBUS FMS RS485
		PROFIBUS FMS double ring
		PROFIBUS FMS single ring
		PROFIBUS DP RS485
		PROFIBUS DP double ring
		Modbus RS485
		Modbus 820 nm
		DNP 3.0 RS485
		DNP 3.0 820 nm
		Ethernet double electrical
		Ethernet optical
Additional Interface	D	FO 820 nm
		RS485

The ordering number of the replacement modules are listed in the Appendix A.1.

RS232 Interface

The RS232 interface can be transformed into a RS485 interface and vice versa, according to Figure 3-13.

Figure 3-11 shows the PCB C-CPU-2 with the layout of the boards.

Figure 3-12 shows how jumpers of interface RS232 are located on the interface module.

Jumper	Terminating Resistors Disconnected
X3	1-2 *)
X4	1-2 *)

*) Default Setting

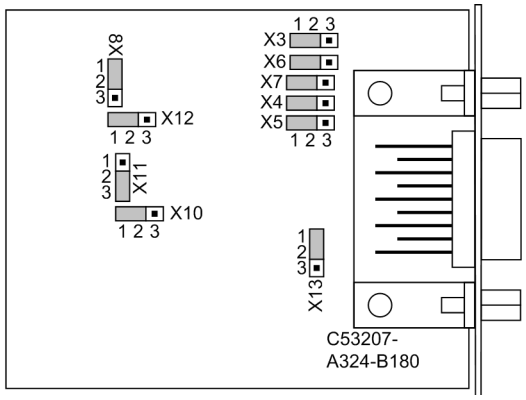

Figure 3-12 Location of the jumpers for configuration of RS232

Terminating resistors are not required. They are disconnected.

Please observe that in surface-mounted devices with fibre optics connection the CPU module is equipped with an RS232 interface module. In this application, the jumpers X12 and X13 on the RS232 module are set to position 2-3, unlike the arrangement shown in Figure 3-12.

With jumper X11 the flow control which is important for modem communication is enabled.

Table 3-20 Jumper setting for **CTS** (**C**lear **T**o **S**end, flow control) on the interface module

Jumper	/CTS from Interface RS232	/CTS controlled by /RTS
X11	1-2	2-3 [1)]

[1)] Default Setting

Jumper setting 2-3: The connection to the modem is usually established with a star coupler or fibre-optic converter. Therefore the modem control signals according to RS232 standard DIN 66020 are not available. Modem signals are not required since the connection to the SIPROTEC 4 devices is always operated in the half-duplex mode. Please use the connection cable with order number 7XV5100-4.

Jumper setting 1-2: This setting makes the modem signals available, i. e. for a direct RS232-connection between the SIPROTEC 4 device and the modem this setting can be selected optionally. We recommend to use a standard RS232 modem connection cable (converter 9-pin to 25-pin).



Note

For a direct connection to DIGSI with interface RS232 jumper X11 must be plugged in position 2-3.

RS485 Interface

Interface RS485 can be modified to interface RS232 and vice versa (see Figures 3-12 and 3-13).

For bus-capable interfaces a termination is necessary at the bus for each last device, i.e. terminating resistors must be connected.

The terminating resistors are connected to the corresponding interface module that is mounted to the processor board C-CPU-2. Figure 3-11 shows the PCB C-CPU-2 with the layout of the boards.

The module for the RS485 Interface is illustrated in Figure 3-13. The module of the Profibus interface is illustrated in Figure 3-14.

With default setting, jumpers are plugged in such a way that terminating resistors are disconnected. For the configuration of the terminating resistors both jumpers have to be plugged in the same way.

Jumper	Terminating Resistors	
	Connected	Disconnected
X3	2-3	1-2 *)
X4	2-3	1-2 *)

*) Default Setting

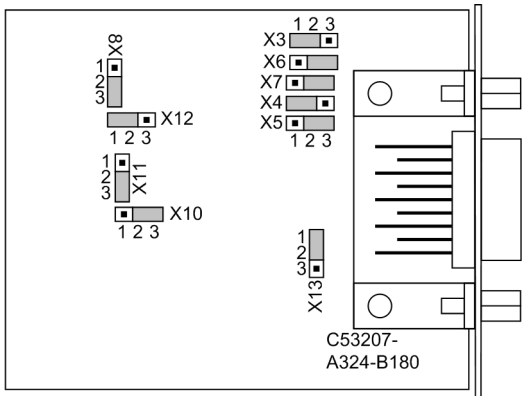

Figure 3-13 Position of terminating resistors and the plug-in jumpers for configuration of the RS485 interface

Jumper	Terminating Resistors	
	Connected	Disconnected
X3	1-2	2-3 *)
X4	1-2	2-3 *)

*) Default Setting

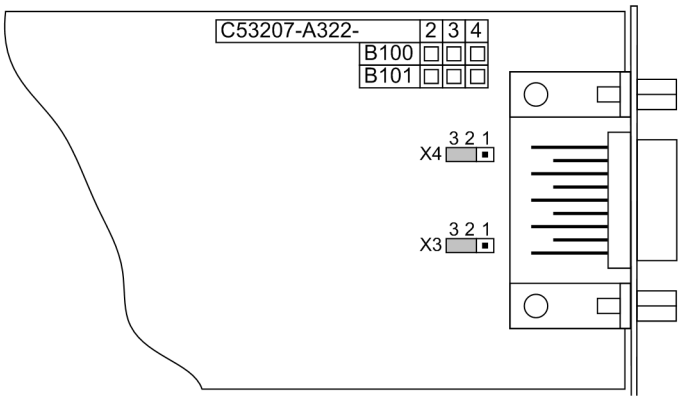

Figure 3-14 Position of the plug-in jumpers for the configuration of the terminating resistors at the Profibus (FMS and DP), DNP 3.0 and Modbus interfaces

Terminating resistors can also be implemented outside the device (e.g. in the plug connectors). In this case, the terminating resistors located on the RS485 or PROFIBUS interface module must be switched off.

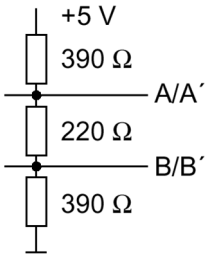

Figure 3-15 Termination of the RS485 interface (external)

3.1.2.5 Reassembly

The device is assembled in the following steps:

- Carefully insert the boards into the housing. The mounting locations of the boards are shown in Figures 3-3 and 3-4.

  For the model of the device designed for surface mounting, use the metal lever to insert the C-CPU-2 board. The installation is easier with the lever.
- First insert the plug connectors of the ribbon cable on the input/output boards C-I/O and then on the processor board C-CPU-2. Be careful not to bend any of the connector pins! Do not use force!
- Insert the plug connector of the ribbon cable between the processor board C-CPU-2 and the front cover in the socket on the front cover.
- Press plug connector interlocks together.
- Put on the front cover and screw it onto the housing.
- Put the covers back on.
- Re-fasten the interfaces on the rear of the device housing. This activity is not necessary if the device is designed for surface mounting.

3.1.3 Mounting

3.1.3.1 Panel Flush Mounting

Depending on the version, the device housing can be $^1/_2$ or $^1/_1$. For housing size $^1/_2$ (7UT613), there are 4 covers and 4 holes. For housing size $^1/_1$ (7UT633 or 7UT635), there are 6 covers and 6 holes.

- Remove the 4 or 6 caps on the corners of the front cover to reveal the 4 or 6 elongated holes in the mounting bracket.
- Insert the device into the panel cut-out and fasten it with four or six screws. For dimensions refer to Section 4.23.
- Mount the four or six covers.
- Connect the earth on the rear plate of the device to the protective earth of the panel. Use at least one M4 screw for the device earth. The cross-sectional area of the earth wire must be equal to the cross-sectional area of any other control conductor connected to the device. The cross-section of the earth wire must be at least 2.5 mm ^{2}.
- Connections are realised via the plug terminals or screw terminals on the rear side of the device in accordance with the circuit diagram. For screw connections with forked lugs or direct connection the screws must be tightened before inserting wires so that the screw heads are flush with the outer edge of the connection block. If ring lugs are used, the lug must be centred in the connection chamber in such a way that the screw thread fits in the hole of the lug. The SIPROTEC 4 System Description /1/ has pertinent information regarding wire size, lugs, bending radii, etc.

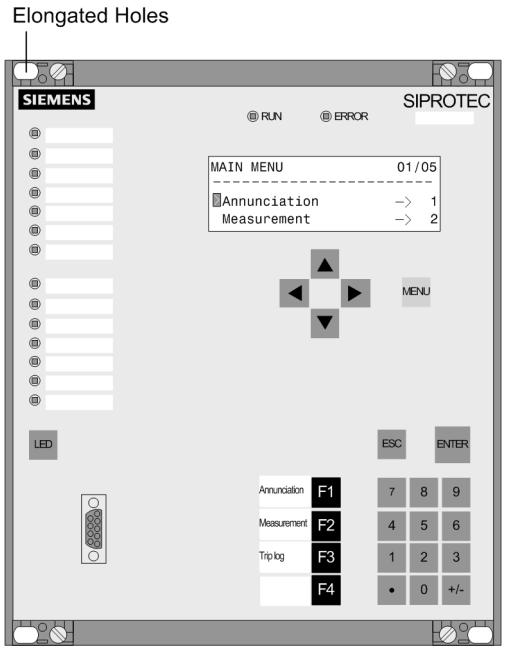

Figure 3-16 Panel flush mounting of a 7UT613 (housing size $^1/_2$) — example

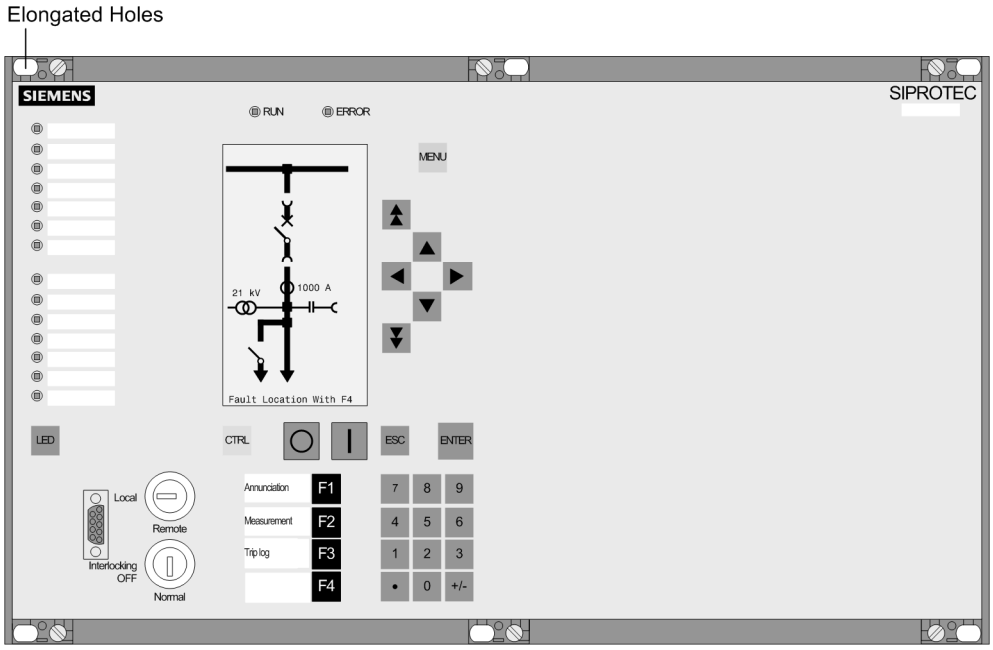

Figure 3-17 Panel flush mounting of a 7UT633 or 7UT635 (housing size $^1/_1$) — example

3.1.3.2 Rack and Cubicle Mounting

Depending on the version, the device housing can be $^1/_2$ or $^1/_1$. For housing size $^1/_2$ (7UT613), there are 4 covers and 4 holes. For housing size $^1/_1$ (7UT633 or 7UT635), there are 6 covers and 6 holes.

2 mounting brackets are required for incorporating a device in a rack or cubicle. The order numbers can be found in the Appendix under A.1.

- Loosely screw the two mounting brackets in the rack with four screws.
- Remove the 4 or 6 caps on the corners of the front cover to reveal the 4 or 6 elongated holes in the mounting bracket.
- Fasten the device to the mounting brackets with 4 or 6 screws (refer to Figure 4.23 for dimensions).
- Mount the four or six covers.
- Tighten fast the eight screws of the angle brackets in the rack or cabinet.
- Screw down a robust low-ohmic protective earth or station earth to the rear of the device using at least an M4 screw. The cross-sectional area of the earth wire must be equal to the cross-sectional area of any other conductor connected to the device. The cross-section of the earth wire must be at least 2.5 mm^2.
- Connections use the plug terminals or screw terminals on the rear side of the device in accordance the wiring diagram. For screw connections with forked lugs or direct connection, before inserting wires the screws must be tightened so that the screw heads are flush with the outer edge of the connection block. A ring lug must be centred in the connection chamber, in such a way that the screw thread fits in the hole of the lug. The SIPROTEC 4 System Description /1/ has pertinent information regarding wire size, lugs, bending radii, etc.

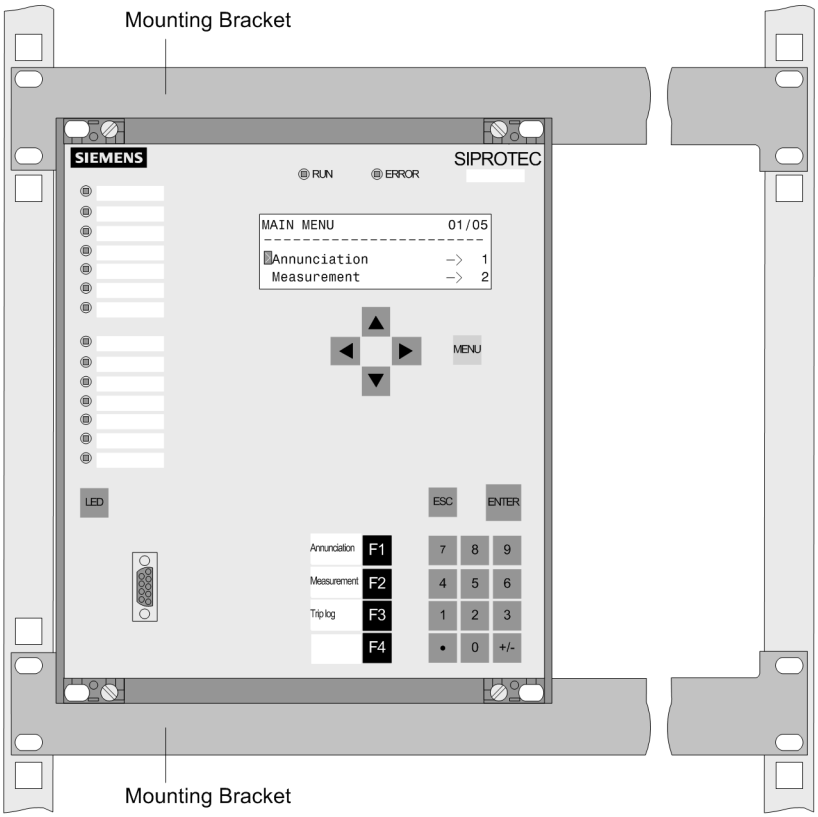

Figure 3-18 Installation of a 7UT613 in a rack or cubicle (housing size $^1/_2$) — example

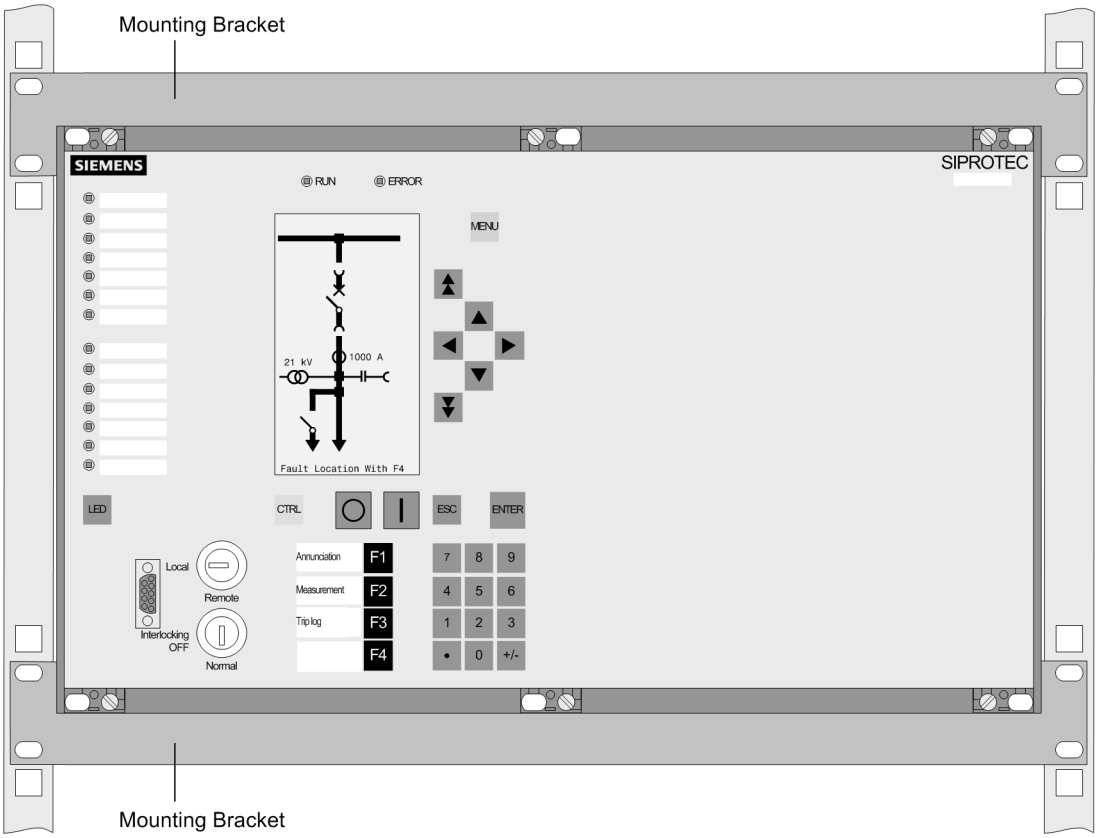

Figure 3-19 Installation of a 7UT633 or 7UT635 in a rack or cubicle (housing size $^1/_1$) — example

3.1.3.3 Panel Surface Mounting

Note

Note With housing size $^1/_1$, the transport protection must not be removed until the device has arrived at its final place of use. If a pre-mounted device (e.g. on a mounting panel) is to be transported, the transport protection must be fitted. To do so, screw the device and the transport protection onto the mounting panel using the 4 nuts and washers provided with the 4 bolts of the protection.

In all other cases, remove the transport protection when you install a device with housing size $^1/_1$ (see below „Removing the Transport Protection“:

- Secure the device to the panel with four screws. For dimension drawings see Section 4.23.
- Connect the low-resistance operational and protective earth to the ground terminal of the device. The cross-sectional area of the ground wire must be equal to the cross-sectional area of any other control conductor connected to the device. It must thus be at least 2.5 mm^2.

- Alternatively, there is the possibility to connect the aforementioned earthing to the lateral grounding surface with at least one M4 screw.
- Connections according to the circuit diagram via screw terminals, connections for optical fibres and electrical communication modules via the console housing. The SIPROTEC 4 System Description /1/ has pertinent information regarding wire size, lugs, bending radii, etc. Installation notes are also given in the brief reference booklet attached to the device.

3.1.3.4 Removing the Transport Protection

Devices in housings size $^1/_1$ (7UT633 and 7UT635) for surface mounting are delivered with a transport protection (Figure 3-20). This protection must not be removed until the device has arrived at its final place of use.

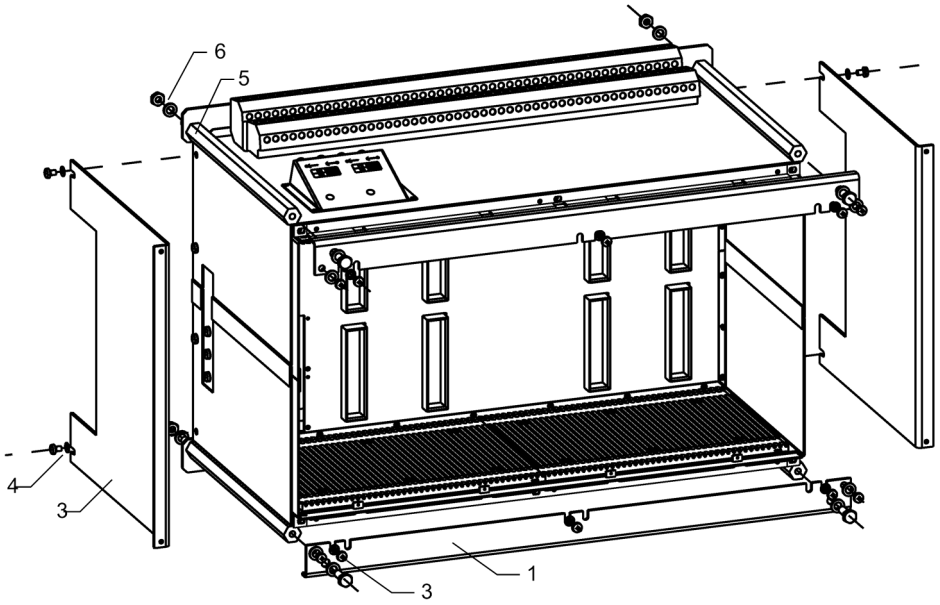

Figure 3-20 View of a housing with transport protection (without front cover nor boards)

- Remove the 4 covers at the corners and the 2 covers in the centre above and below on the front cover to reveal 6 elongated holes.
- Loosen the 6 screws (2) in the elongated holes.
- Remove all other screws on the rails (1) and remove the top and bottom rails.
- Loosen the 2 screws each (4) in the elongated holes on the right and left side walls (3), and remove the side walls.
- Firmly tighten again all 10 screws that you loosened.
- **Attention!** If the device is pre-mounted, e.g. on a mounting panel, and secured with a transport protection, do not remove all bolts at once. In such a case, remove only one bolt at a time and immediately re-screw the device to the mounting panel at the place where you removed the bolt.
- Remove the nuts and washers (6) from the 4 bolts (5), and remove the bolts.
- The device can now be secured to the panel with four screws.

3.2 Checking Connections

3.2.1 Checking Data Connections of Serial Interfaces

Pin assignments

The following tables illustrate the pin assignment of the various serial device interfaces and of the time synchronisation interface and the Ethernet interface. The position of the connections can be seen in the following figure.

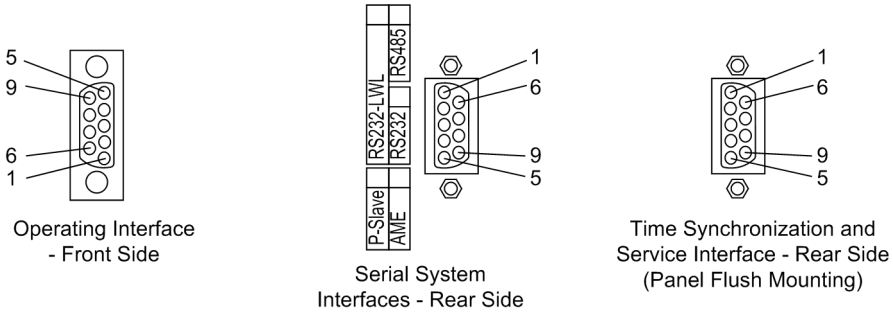

Figure 3-21 9-pin D-subminiature female connectors

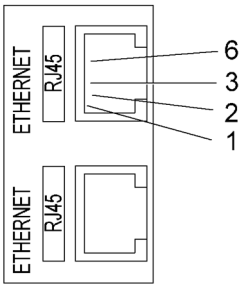

Figure 3-22 Ethernet connector

Operating Interface

When the recommended communication cable is used, correct connection between the SIPROTEC 4 device and the PC is automatically ensured. See the Appendix for an ordering description of the cable.

Service Interface

Check the data connection if the service interface (Interface C) for communicating with the device is via fix wiring or a modem. If the service port is used as input for one or two RTD-boxes, verify the interconnection according to one of the connection examples given in the Appendix A.3.

System Interface

When a serial interface of the device is connected to a central substation control system, the data connection must be checked. The visual check of the assignment of the transmission and reception channels is of particular importance. With RS232 and fibre optic interfaces, each connection is dedicated to one transmission direction. Therefore the output of one device must be connected to the input of the other device and vice versa.

With data cables, the connections are designated according to DIN 66020 and ISO 2110:

- TxD = Data output
- RxD = Data input
- $\overline{\text{RTS}}$ = Request to send
- $\overline{\text{CTS}}$ = Clear to send
- GND = Signal/Chassis Ground

The cable shield is to be grounded at **both ends**. For extremely EMC-prone environments, the GND may be connected via a separate individually shielded wire pair to improve immunity to interference.

The following table lists the assignments of the DSUB port for the various serial interfaces.

Table 3-21 Assignment of the connectors for the various serial interfaces

Pin No.	RS232	RS485	Profibus FMS Slave, RS485 Profibus DP Slave, RS485	Modbus RS485 DNP3.0 RS485	Ethernet EN 100
1	Shield (with shield ends electrically connected)				Tx+
2	RxD	–	–	–	Tx–
3	TxD	A/A' (RxD/TxD-N)	B/B' (RxD/TxD-P)	R	Rx+
4	–	–	CNTR-A (TTL)	RTS (TTL level)	—
5	GND	C/C' (GND)	C/C' (GND)	EARTH1	—
6	–	–	+5 V (max. load < 100 mA)	VCC1	Rx–
7	$\overline{\text{RTS}}$	– [1)]	–	–	—
8	$\overline{\text{CTS}}$	B/B' (RxD/TxD-P)	A/A' (RxD/TxD-N)	B	—
9	–	–	–	–	non existent

1) Pin 7 also carries the RTS signal with RS232 level when operated as RS485 interface. Pin 7 must therefore not be connected!

Termination

The RS485 interfaces are capable of half-duplex service with the signals A/A' and B/B' with a common reference potential C/C' (GND). It must be checked that the terminating resistors are connected only for the respectively last device of the bus but not for all other devices of the bus.

The jumpers for the terminating resistors are located on the interface module RS485 (see figure 3-13) or PROFIBUS RS485 (see figure 3-14).

It is also possible that the terminating resistors are arranged externally (figure 3-15).

If the bus is extended, verify again that only the last device on the bus has the terminating resistors connected, and that the other devices on the bus do not.

Time Synchronisation Interface

Either 5 VDC, 12 VDC or 24 VDC time synchronisation signals can be processed if the connections are made as indicated in the table below.

Table 3-22 D-subminiature connector assignment of the time synchronisation interface

Pin No.	Designation	Signal significance
1	P24_TSIG	Input 24 V
2	P5_TSIG	Input 5 V
3	M_TSIG	Return line
4	M_TYNC [1)]	Return line [1)]
5	SCREEN	Screen potential
6	–	–
7	P12_TSIG	Input 12 V
8	P_TSYNC [1)]	Input 24 V [1)]
9	SCREEN	Screen potential

[1)] assigned, but not used

Fibre-optic Cables



WARNING!

Laser rays!

Do not look directly into the fiber-optic elements!

Signals transmitted via optical fibers are unaffected by interference. The fibers guarantee electrical isolation between the connections. Transmit and receive connections are represented by symbols.

The character idle state for the optical fibre interface is „Light off“. If the character idle state is to be changed, use the operating program DIGSI, as described in the SIPROTEC 4 System Description.

RTD box

If one or two RTD-boxes 7XV5662-xAD are connected for considering the coolant temperature when using overload protection with hot-spot calculation, check their connection at the service interface (Port C) or the auxiliary interface (Port D).

Also verify the termination. The terminating resistors must be connected to the device (see margin heading „Termination“).

For further information refer to the operating manual of 7XV5662-xAD. Check the transmission settings at the temperature meter. Besides the baud rate and the parity, the bus number is also important.

For connection of RTD-box(es) proceed as follows:

- For connection of **1** RTD-box 7XV5662-xAD:
  Bus number = **0** with Simplex transmission (to be set at 7XV5662-xAD),
  Bus number = **1** with Duplex transmission (to be set at 7XV5662-xAD).
- For connection of **2** RTD-boxes 7XV5662-xAD:
  Bus number = **1** for the 1st RTD-box (to be set at 7XV5662-xAD for RTD 1 to 6),
  Bus number = **2** for the 2nd RTD-box (to be set at 7XV5662-AD for RTD 7 to 12).

3.2.2 Checking the System Connections

Before the device is energized for the first time, the device should be in the final operating environment for at least 2 hours to equalize the temperature, to minimize humidity and avoid condensation. Connections are checked with the device at its final location. The plant must first be switched off and grounded.



WARNING!

Warning of dangerous voltages

Non-observance of the following measures can result in death, personal injury or substantial property damage.

Therefore, only qualified people who are familiar with and adhere to the safety procedures and precautionary measures shall perform the inspection steps.



Caution!

Be careful when operating the device on a battery charger without a battery

Non-observance of the following measure can lead to unusually high voltages and consequently, the destruction of the device.

Do not operate the device on a battery charger without a connected battery. (Limit values can be found in the technical data).

Connection examples for current transformer circuits are provided in the Appendix A.3. Please observe the terminal assignments (see Appendix A.2).

Proceed as follows in order to check the system connections:

- Protective switches for the power supply and the measured voltages must be switched off.
- Check the continuity of all current and voltage transformer connections against the system and connection diagrams:
  - Is the connection of all 3-phase current transformer sets to the device inputs correct and in accordance with the set topology?
  - Is the connection of all 1-phase current transformers to the device inputs correct and in accordance with the set topology?
  - Are the current transformers earthed properly?
  - Are the polarities of the current transformers the same for each CT set?
  - Phase assignment of all 3-phase current transformers correct?
  - Are the polarities of all single-phase current inputs correct (if used)?
  - Are the voltage transformers earthed properly (if used)?
  - Are the polarities of the voltage transformers correct (if used)?
  - Is the phase relationship of the voltage transformers correct (if used)?
  - Is the polarity for voltage input U_4 correct (if used, e.g. with open delta winding)?

- Check the functions of all test switches that may be installed for the purposes of secondary testing and isolation of the device. Of particular importance are test switches in current transformer circuits. Be sure these switches short-circuit the current transformers when they are in the „test“ mode (open).
- The short-circuiters of the plug connectors for the current circuits must be checked. This may be performed with secondary test equipment or other test equipment for checking continuity. Make sure that terminal continuity is not wrongly simulated in reverse direction via current transformers or their short-circuiters.
  - Remove the front panel.
  - Remove the ribbon cable connected to the C–I/O-9 board and pull the board out until there is no contact between the board and the rear connections of the device.

    7UT613: C-I/O-9 slot 33

    7UT633: C-I/O-9 slot 33 right side

    7UT635: C-I/O-9 slot 33 right side
  - At the terminals of the device, check continuity for each pair of terminals that receives current from the CTs.
  - Firmly re-insert the I/O board.
  - At the terminals of the device, again check continuity for each pair of terminals.
  - Repeat the above continuity tests for the other boards that receive current from the CTs.

    7UT613: C-I/O-2 slot 19

    7UT633: C-I/O-2 slot 19 right

    7UT635: C-I/O-9 slot 19 right side
  - Carefully plug in the ribbon cable. Be careful not to bend any connector pins. Do not apply force!
  - Attach the front panel and tighten the screws.
- Connect an ammeter in the supply circuit of the power supply. A range of about 2.5 A to 5 A for the meter is appropriate.
- Switch on m.c.b. for auxiliary voltage (supply protection), check the voltage level and, if applicable, the polarity of the voltage at the device terminals or at the connection modules.
- The measured steady-state current should correspond to the quiescent power consumption of the device. Transient movement of the ammeter merely indicates the charging current of capacitors.
- Open the miniature circuit breakers for the power supply.
- Disconnect the ammeter; restore the normal power supply connections.
- Switch on voltage transformer protective breaker (if used).
- Verify that the voltage phase rotation at the device terminals is correct.
- Open the miniature circuit breakers for the transformer voltage (VT mcb) and the power supply.
- Check tripping circuits to the circuit breakers.
- Verify that the control wiring to and from other devices is correct.
- Check the signalling connections.
- Close the protective switches.

3.3 Commissioning



WARNING!

Warning of dangerous voltages when operating an electrical device

Non-observance of the following measures can result in death, personal injury or substantial property damage.

Only qualified people shall work on and around this device. They must be thoroughly familiar with all warnings and safety notices in this instruction manual as well as with the applicable safety steps, safety regulations, and precautionary measures.

Before making any connections, the device must be earthed at the protective conductor terminal.

Hazardous voltages can exist in the power supply and at the connections to current transformers, voltage transformers, and test circuits.

Hazardous voltages can be present in the device even after the power supply voltage has been removed (capacitors can still be charged).

After removing voltage from the power supply, wait a minimum of 10 seconds before re-energizing the power supply. This wait allows the initial conditions to be firmly established before the device is re-energized.

The limit values given in Technical Data must not be exceeded, neither during testing nor during commissioning.

For tests with a secondary test equipment ensure that no other measurement voltages are connected and the trip and close commands to the circuit breakers are blocked, unless otherwise specified.



DANGER!

Hazardous voltages during interruptions in secondary circuits of current transformers

Non-observance of the following measure will result in death, severe personal injury or substantial property damage.

Short-circuit the current transformer secondary circuits before current connections to the device are opened.

During the commissioning procedure, switching operations must be carried out. The tests described require that they can be done without danger. They are accordingly not meant for operational checks.



WARNING!

Warning of dangers evolving from improper primary tests

Non-observance of the following measure can result in death, personal injury or substantial property damage.

Primary tests may only be carried out by qualified persons who are familiar with commissioning protection systems, with managing power systems and the relevant safety rules and guidelines (switching, earthing etc.).

3.3.1 Test Mode / Transmission Block

If the device is connected to a station control system or a server, the user is able to modify, in some protocols, information that is transmitted to the substation (see Table „protocol dependent functions“ in Appendix A.6).

If **test mode** is set ON, then a message sent by a SIPROTEC 4 device to the main system has an additional test bit.This allows the message to be recognised as resulting from testing and not actual fault or power system event. Furthermore it can be determined by activating the **Transmission block** that no indications at all are transmitted via the system interface during test mode.

The SIPROTEC 4 System Description /1/ describes how to activate and deactivate test mode and transmission block. Note that when DIGSI is being used, the program must be in the **Online** operating mode for the test features to be used.

3.3.2 Test Time Synchronisation Interface

If external time synchronisation sources are used, the data of the time source (antenna system, time generator) are checked (see Subsection 4 „Technical Data“ under „ Time Synchronisation Interface“). A correct function (IRIG B, DCF77) is recognised in such a way that 3 minutes after the startup of the device the clock status is displayed as „`synchronised`“, accompanied by the message „`Alarm Clock OFF`“.

Table 3-23 Time Status

No.	Status Text	Status
1	– – – – – – – –	Synchronised
2	– – – – – – ST	
3	– – – – ER – –	Not synchronised
4	– – – – ER ST	
5	– – NS ER – –	
6	– – NS – – – –	
Legend: – – NS – – – – – – – – ER – – – – – – – – ST		Invalid time Clock error Summer time

3.3.3 Testing the System Interface

Prefacing Remarks

If the device features a system interface and uses it to communicate with the control centre, the DIGSI device operation can be used to test if messages are transmitted correctly. This test option should however definitely „not“ be used while the device is in service on a live system.



DANGER!

The sending or receiving of indications via the system interface by means of the test function is a real information exchange between the SIPROTEC 4 device and the control centre. Connected operating equipment such as circuit breakers or disconnectors can be switched in this way!

Non-observance of the following measure will result in death, severe personal injury or substantial property damage.

Equipment used to allow switching such as circuit breakers or disconnectors is to be checked only during commissioning. Do not under any circumstances check them by means of the testing mode during „real“ operation performing transmission and reception of messages via the system interface.



Note

After termination of the hardware test, the device will reboot. Thereby, all annunciation buffers are erased. If required, these buffers should be extracted with DIGSI prior to the test.

The interface test is carried out using DIGSI in the Online operating mode:

- Open the **Online** directory by double-clicking; the operating functions for the device appear.
- Click on **Test**; the function selection appears in the right half of the window.
- Double-click on **Testing Messages for System Interface** shown in the list view. The dialog box **Generate Indications** is opened (see Figure 3-23).

Structure of the Dialog Box

In the column **Indication**, all message texts that were configured for the system interface in the matrix will then appear. In the column **Setpoint** you determine a value for the indications that shall be tested. Depending on the type of message different entering fields are available (e.g. ***message ON*** / ***message OFF***). By clicking on one of the buttons you can select the desired value from the pull-down menu.

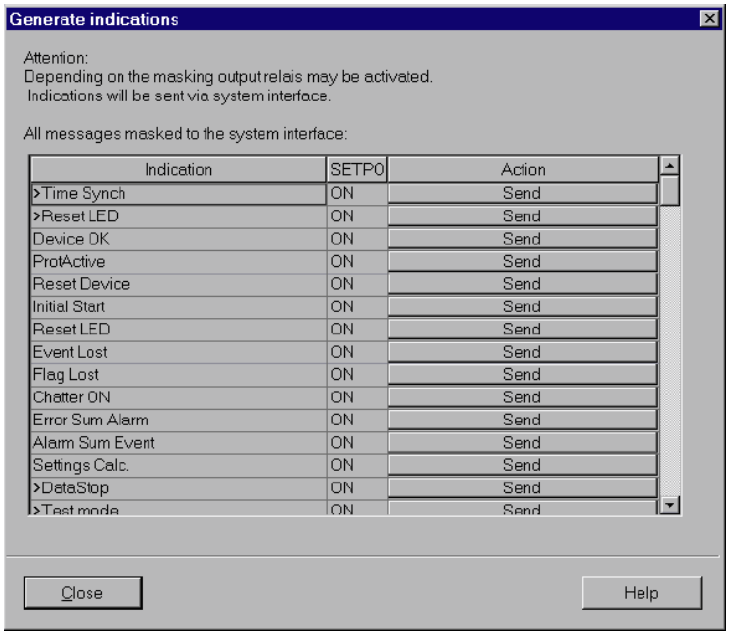

Figure 3-23 System interface test with dialog box: Generating indications – Example

Changing the Operating State

On clicking one of the buttons in the column **Action** you will be prompted for the password No. 6 (for hardware test menus). After correct entry of the password, individual annunciations can be initiated. To do so, click on the button **Send** in the corresponding line. The corresponding message is issued and can be read out either from the event log of the SIPROTEC 4 device or from the substation control center.

Further tests remain enabled until the dialog box is closed.

Test in Indication Direction

For all information that is transmitted to the central station, test in **Setpoint** the desired options in the list which appears:

- Make sure that each checking process is carried out carefully without causing any danger (see above and refer to DANGER!)
- Click Send in the function to be tested and check whether the corresponding information reaches the control center and possibly shows the expected effect. Data which are normally linked via binary inputs (first character „>“) are likewise indicated to the control center with this procedure. The function of the binary inputs itself is tested separately.

Exiting the Test Mode

To end the System Interface Test, click on **Close**. The dialog box closes. The processor system is restarted, then the device is ready for operation.

Test in Command Direction

Data which are normally linked via binary inputs (first character „>“) are likewise checked with this procedure. The information transmitted in command direction must be indicated by the central station. Check whether the reaction is correct.

3.3.4 Checking the switching states of the binary Inputs/Outputs

Prefacing Remarks

The binary inputs, outputs, and LEDs of a SIPROTEC 4 device can be individually and precisely controlled in DIGSI. This feature is used to verify control wiring from the device to plant equipment (operational checks) during commissioning. This test option should however definitely „not“ be used while the device is in service on a live system.



DANGER!

A changing of switching states by means of the test function causes a real change of the operating state at the SIPROTEC 4 device. Connected operating equipment such as circuit breakers or disconnectors will be switched in this way!

Non-observance of the following measure will result in death, severe personal injury or substantial property damage.

Equipment used to allow switching such as circuit breakers or disconnectors is to be checked only during commissioning. Do not under any circumstances check them by means of the testing mode during „real“ operation performing transmission and reception of messages via the system interface.



Note

After termination of the hardware test the device will reboot. Thereby, all annunciation buffers are erased. If required, these buffers should be extracted with DIGSI prior to the test.

The hardware test can be carried out using DIGSI in the Online operating mode:

- Open the **Online** directory by double-clicking; the operating functions for the device appear.
- Click on **Test**; the function selection appears in the right half of the window.
- Double-click in the list view on **Device inputs and outputs**. The dialog box with this name is opened (see Figure 3-24).

Structure of the Dialog Box

The dialog box is classified into three groups: **BI** for binary inputs, **REL** for output relays, and **LED** for light-emitting diodes. On the left of each group is an accordingly labelled panel. By double-clicking these panels you can show or hide the individual information of the selected group.

In the column **Status** the present (physical) state of the hardware component is displayed. Indication is displayed symbolically. The physical actual states of the binary inputs and outputs are indicated by an open or closed switch symbol, the LEDs by switched on or switched off symbol.

The opposite state of each element is displayed in the column **Scheduled**. The display is in plain text.

The right-most column indicates the commands or messages that are configured (masked) to the hardware components.

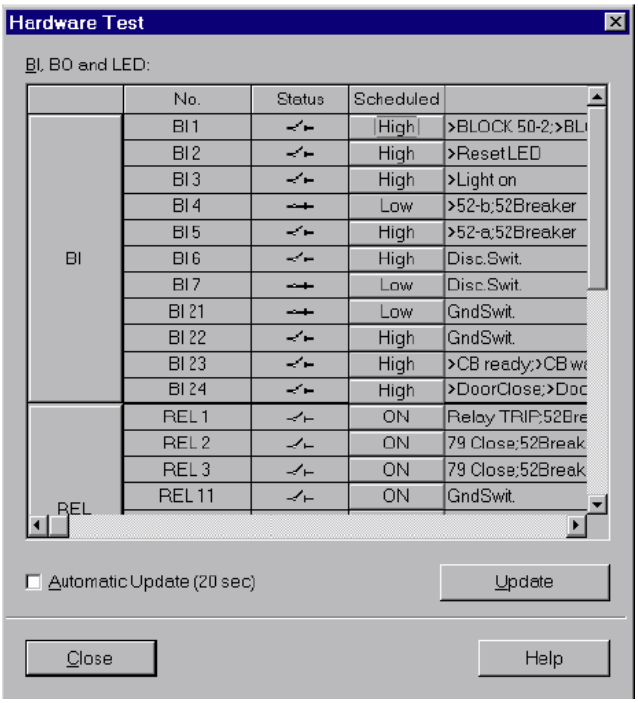

Figure 3-24 Test of the Binary Inputs and Outputs — Example

Changing the operating state

To change the operating state of a hardware component, click on the associated switching field in the **Scheduled** column.

Before executing the first change of the operating state the password No. 6 will be requested (if activated during configuration). After entry of the correct password a condition change will be executed. Further state changes remain enabled until the dialog box is closed.

Test of the Output Relays

Each individual output relay can be energized allowing a check of the wiring between the output relay of the 7UT613/63x and the plant, without having to generate the message that is assigned to the relay. As soon as the first change of state for any of the output relays is initiated, all output relays are separated from the internal device functions, and can only be operated by the hardware test function. This means, that e.g. a TRIP command coming from a protection function or a control command from the operator panel to an output relay cannot be executed.

Proceed as follows in order to check the output relay :

- Make sure that the switching operations caused by the output relays can be executed without any danger (see above under DANGER!).
- Each output relay must be tested via the corresponding **Scheduled** cell in the dialog box.
- Finish the testing (see margin heading below „Exiting the Procedure“), so that during further testings no unwanted switchings are initiated.

Test of the Binary Inputs

To test the wiring between the plant and the binary inputs of the 7UT613/63x the condition in the system which initiates the binary input must be generated and the response of the device checked.

To do so, open the dialog box **Hardware Test** again to view the physical position of the binary input. The password is not yet required.

Proceed as follows in order to check the binary inputs:

- Activate in the system each of the functions which cause the binary inputs.
- Check the reaction in the **Status** column of the dialog box. To do this, the dialog box must be updated. The options may be found below under the margin heading „Updating the Display“.
- Finish the test sequence (see margin heading below „Exiting the Procedure“).

If, however, the effect of a binary input must be checked without carrying out any switching in the system, it is possible to trigger individual binary inputs with the hardware test function. As soon as the first state change of any binary input is triggered and the password No. 6 has been entered, all binary inputs are separated from the system and can only be activated via the hardware test function.

Test of the LEDs

The LEDs may be tested in a similar manner to the other input/output components. As soon as the first state change of any LED has been triggered, all LEDs are separated from the internal device functionality and can only be controlled via the hardware test function. This means e.g. that no LED is illuminated anymore by a protection function or by pressing the LED reset button.

Updating the Display

When the dialog box **Hardware Test** is opened, the present conditions of the hardware components at that moment are read in and displayed.

An update is made:

- For the particular hardware component, if a command for change to another state was successful,
- For all hardware components if the **Update** button is clicked,
- For all hardware components with cyclical updating (cycle time is 20 sec) if the **Automatic Update (20 sec)** field is marked.

Exiting the Procedure

To end the hardware test, click on **Close**. The dialog box closes. Thus, all the hardware components are set back to the operating state specified by the plant states. The processor system is restarted, then the device is ready for operation.

3.3.5 Checking the Setting Consistency

The 7UT613/63x device checks the settings of the protection functions against the corresponding configuration parameters. Any inconsistencies will be reported. For instance, earth fault differential protection cannot be applied if there is no measuring input for the starpoint current between starpoint of the protected object and the earthing electrode.

The device also checks the matching factors between the rated currents of the CT’s and the operational currents of the protected object(s) as processed by the protection functions. If very high deviations combined with sensitive protection settings are discovered an alarm is output which also indicates the suspicious setting address(es).

Check in the operational or spontaneous annunciations that there is not any information on inconsistencies.

Table 3-24 Indications on inconsistencies

Message	No	Meaning	see Section
„Error1A/5Awrong“	192	Setting of the rated secondary currents on input/output board inconsistent, general	2.1.4 3.1.2 („Switch elements on printed circuit boards“)
„Err. IN CT M1“ to „Err. IN CT M5“	30097 to 30101	Setting of the rated secondary currents inconsistent for the indicated measured current input (3-phase inputs)	2.1.4 3.1.2 („Switch elements on printed circuit boards“)
„Err.IN CT1..3“ to „Err.IN CT10..12“	30102 to 30105	Setting of the rated secondary currents inconsistent for the indicated measured current input (inputs for single-phase busbar protection)	2.1.4 3.1.2 („Switch elements on printed circuit boards“)
„Err. IN CT IX1“ to „Err. IN CT IX4“	30106 to 30109	Setting of the rated secondary currents inconsistent for the indicated measured current input (single-phase inputs)	2.1.4 3.1.2 („Switch elements on printed circuit boards“)
„FaultConfig/Set“	311	Group indication for configuration error	
„GenErrGroupConn“	312	General: Error in transformer connection group	2.1.4
„GenErrEarthCT“	313	Error in single-phase inputs for earth fault differential protection	2.1.4
„GenErrSidesMeas“	314	Error in assignment of sides and/or measuring locations	2.1.4
„par too low:“	30067	Parameter setting value too small for the indicated address number	
„par too high:“	30068	Parameter setting value too high for the indicated address number	
„settingFault:“	30069	Parameter setting implausible for the indicated address number	
„Diff Adap.fact.“	5620	The matching factor of the current transformers for the differential protection is too great or too small	2.1.4 2.2
„Diff err. Set.“	5623	Differential protection setting not plausible	2.2
REF not avail.	5835	Restricted earth fault protection is not available for the configured protected object	2.1.4
REF Adap.fact.	5836	The matching factor of the current transformers for restricted earth fault protection is too great or too small.	2.1.4 2.3
REF Err CTstar	5830	There is no single-phase measuring input assigned to the starpoint current for restricted earth fault protection	2.1.4 2.2
„REF err. Set.“	199.2493	Earth fault differential protection setting not plausible	2.1.1
„REF2 Not avail.“	205.2491	Restricted earth fault protection 2 is not available for the configured protected object	2.4.1
„REF2 Adap.fact.“	205.2494	The matching factor of the current transformers for restricted earth fault protection 2 is too great or too small.	2.4.1 2.3
„REF2 Err CTstar“	205.2492	There is no single-phase measuring input assigned to the starpoint current for restricted earth fault protection 2	2.4.1 2.2
„REF2 err. Set.“	205.2493	Earth fault differential protection setting not plausible	2.1.1
O/C Ph. not active	1860	Time overcurrent protection for phase currents is not available for the configured protected object	2.1.4
„O/C Para error“	023.2493	Settings for time overcurrent protection for phase currents not plausible	2.4.2
„O/C Ph2 Not av.“	207.2491	Time overcurrent protection for phase currents 2 is not available for the configured protected object	2.1.42.1.6
„O/C Ph2 err Set“	207.2493	Settings for time overcurrent protection for phase currents 2 not plausible	2.4.2

Message	No	Meaning	see Section
„O/C Ph3 Not av.“	209.2491	Time overcurrent protection for phase currents 3 is not available for the configured protected object	2.1.42.1.6
„O/C Ph3 err Set“	209.2493	Settings for time overcurrent protection for phase currents 3 not plausible	2.4.2
O/C 3I0 not av.	1861	Time overcurrent protection for zero current is not available for the configured protected object	2.1.4
„O/C 3I0 error“	191.2493	Settings for time overcurrent protection for zero sequence current not plausible	2.4.2
„O/C 3I0-2 n/a“	321.2491	Time overcurrent protection for zero sequence current 2 is not available for the configured protected object	2.1.42.1.6
„O/C3I0-2 errSet“	321.2493	Settings for time overcurrent protection 2 for zero sequence current not plausible	2.4.2
„O/C 3I0-3 n/a“	323.2491	Time overcurrent protection for zero sequence current 3 is not available for the configured protected object	2.1.42.1.6
„O/C3I0-3 errSet“	323.2493	Settings for time overcurrent protection 3 for zero sequence current not plausible	2.4.2
O/C 3I0 Err CT	1862	No assignment possible for time overcurrent protection for earth current	2.1.4
„O/C E error“	024.2493	Settings for time overcurrent protection for earth current not plausible	2.5
„O/C E2 ErrCT“	325.2492	No assignment possible for time overcurrent protection for earth current 2	2.1.42.1.6
„O/C E2 err. Set“	325.2493	Settings for time overcurrent protection for earth current 2 not plausible	2.5
O/C1ph Err CT	5981	No assignment possible for single-phase time overcurrent protection	2.1.4
„O/C 1Ph err Set“	200.2493	Settings for single-phase time overcurrent protection is not plausible	2.7
„I2 Not avail.“	5172	Unbalanced load protection is not available for the configured protected object	2.1.4
„I2 Adap.fact.“	5168	The matching factor of the current transformers for unbalanced load protection is too great or too small	2.8
„I2 error set.“	5180	Unbalanced load protection setting not plausible	2.8
O/L No Th.meas.	1545	Temperature reception for overload protection is missing (from RTD box)	2.1.3 2.9.5
O/L not avail.	1549	Overload protection is not available for the configured protected object	2.1.4
O/L Adapt.fact.	1546	The matching factor of the current transformers for overload protection is too great or too small	2.1.4 2.9
„O/L2 err. Set.“	204.2493	Settings for overload protection 2 setting not plausible	2.9
„O/L2 No Th.meas“	204.2609	Temperature reception for overload protection 2 is missing (from RTD box)	2.9
„O/L2 Not avail.“	204.2491	Overload protection 2 is not available for the configured protective object	2.9
„O/L2 Adap.fact.“	204.2494	The matching factor of the current transformers for overload protection 2 is too great or too small	2.9
„O/L set wrong“	044.2493	Overload protection setting not plausible	2.9
„U/f Not avail.“	5377	Overexcitation protection is not available for the configured protected object	2.1.4
„U/f Err No VT“	5376	Overexcitation protection is not available without voltage connection	2.1.4
„U/f err. Set.“	5378	Overexcitation protection setting not plausible	2.11
„U< err. Obj.“	033.2491	Undervoltage protection is not available for the configured protected object	2.14

Message	No	Meaning	see Section
„U< err. VT“	033.2492	Undervoltage protection is not available without voltage connection	2.14
„U< err. Set.“	033.2493	Undervoltage protection setting not plausible	2.14
„U> err. Obj.“	034.2491	Overvoltage protection is not available for the configured protected object	2.15
„U> err. VT“	034.2492	Overvoltage protection is not available without voltage connection	2.15
„U> err. Set.“	034.2493	Overvoltage protection setting not plausible	2.15
„Freq. err. Obj.“	5255	Frequency protection is not available for the configured protected object	2.16
„Freq. error VT“	5254	Frequency protection is not available without voltage connection	2.16
„Freq. err. Set.“	5256	Frequency protection setting not plausible	2.16
„Pr obj. error“	5101	Reverse power protection is not available for the configured protected object	2.12
„Pr CT Fact ><“	5099	The matching factor of the current transformers for reverse power protection is too great or too small.	2.12
„Pr VT error“	5100	Reverse power protection is not available without voltage connection	2.12
„Pr set error“	5102	Reverse power protection setting not plausible	2.12
„Pf> Object err“	5132	Forward power supervision is not available for the configured protected object	2.13
„Pf> CT fact ><“	5130	The matching factor of the current transformers for forward power supervision is too great or too small.	2.13
„Pf> VT error“	5131	Forward power supervision is not available without voltage connection	2.13
„Pf> set error“	5133	Forward power supervision setting not plausible	2.13
BrkFail not av.	1488	Breaker failure protection is not available for the configured protected object	2.1.4
	047.2493	Breaker failure protection setting not plausible	2.1.4
„BkrFail2 Not av“	206.2491	Breaker failure protection is not available for the configured protected object	2.1.42.1.6
„BkrFail2 errSet“	206.2493	Breaker failure protection setting not plausible	2.1.4
„TripC ProgFail“	6864	For trip circuit supervision the number of binary inputs was set incorrectly	3.1 („Connection Variants“)

In the operational or spontaneous annunciations also check if there are any fault annunciations from the device.

The matching factors of all measured value inputs are indicated in the operational annunciations. It is recommended to check these factors even if none of the above mentioned alarms is present. The indicated factors are:

- generally, the ratio of the rated current/voltage of the side referred to the rated current/voltage of the instrument transformers at the measuring locations;
- for differential protection, the ratio of the rated current of the protected object referred to the rated current of the current transformers at the measuring locations;
- For restricted earth fault protection, the ratio of the rated current of the assigned side of the protected object referred to the rated current of the starpoint current transformer.

None of these factors should be greater than 8 or smaller than 0.125. Otherwise, the risk of higher measuring errors could arise. If a factor is greater than 50 or smaller than 0.02, unexpected reactions of protection function may occur.

Table 3-25 Indications on matching factors

Message	No.	Description	see section
„Gen CT-M1:“ to „Gen CT-M5:“	30060 to 30064	General: Magnitude matching factor at the indicated measuring location	2.1.4
„Gen VT-U1:“	30065	General: Magnitude matching factor of 3-phase voltage input	2.1.4
„Diff CT-M1:“ to „Diff CT-M5:“	5733 to 5737	Differential protection: Magnitude matching factor of the indicated measuring location (3-phase protected objects)	2.1.4
„Diff CT-I1:“ to „DiffCT-I12:“	5721 to 5732	Differential protection: Magnitude matching factor of the indicated measuring location (1-phase busbar protection)	2.1.4
„Diff CT-IX1:“ to „Diff CT-IX4:“	5738 to 5741	Differential protection: Magnitude matching factor of the indicated auxiliary 1-phase measuring location	2.1.4
„REF CTstar:“	199.2639	Earth fault differential protection 1: Magnitude matching factor of the starpoint current	2.1.4
„REF2 CT-M1:“ to „REF2 CT-M5:“	205.2634 to 205.2638	Earth fault differential protection 2: Magnitude matching factor at the indicated measuring location	2.1.4
„REF2 CTstar:“	205.2639	Earth fault differential protection 2: Magnitude matching factor of the starpoint current	2.1.4

3.3.6 Secondary Tests

Checking the individual protection functions of the characteristic curves or pick-up values is not required since these are part of the firmware programs which are monitored continuously. Analogue inputs are checked at the primary commissioning at the protective object (Section 3.3 under „Symmetrical Current Tests on the Protective Object“). Verification of connections, i.e. coupling with the plant, also takes place there. Measured quantities deviation between the protective functions and phases can be excluded.

Secondary checks can never replace the primary checks described below, as connection errors cannot be included. They can however be used as theoretical test of the setting values. Should you want to perform a secondary test, please observe the following hints.

When performing tests with secondary test equipment, attention must be paid that no other measuring values are applied and that the trip command to the circuit breakers are interrupted.

The tests should be done with the current setting values of the device. If these are not (yet) available, the test should be done with the preset values.

Note

The measurement accuracy to be achieved depends on the electrical data of the test sources used. The accuracies specified in the technical specifications can be expected only if the reference conditions in accordance with VDE 0435/Part 303 or IEC 60255 are adhered to, and precision measurement instruments are used. The stated tolerances refer to the preset data of the protective object. If the (reference current transformer rated current) rated current deviates greatly from the protective object, appropriately high pickup tolerance has to be used.

Differential Protection

Every side of the differential protection can be checked. This is consistent with the simulation of a single source error. If a side has several measuring locations, the not in a test involved measured inputs remain at zero current. Checking the pickup value is performed by slowly increasing the test current.

Caution!

Tests with currents that exceed more than 4 times the rated device current cause an overload of the input circuits and may only be performed for a short time.

See Technical Data

Afterwards the device has to cool off!

Set pickup values refer to symmetrical three-phase currents for three-phase protected objects. For single-phase transformers the currents are presumed at phase opposition. With single-phase busbar protection the summation transformers are to be considered, if applicable. The rated currents of the measured current inputs are important, if the device is connected via a summation transformer is generally 0.1 A.

When testing with the operational parameters, it should be noted that the setting value for the differential protection refers to the rated current of the transformer, i.e. to the primary current which results from

$$I_{Nobj} = \frac{S_{Nobj}\,[MVA] \cdot 1000}{\sqrt{3} \cdot U_{Nobj}\,[kV]}\ [A]$$

in three-phase object and

$$I_{Nobj} = \frac{S_{Nobj}\,[MVA] \cdot 1000}{U_{Nobj}\,[kV]}\ ]A]$$

for single-phase object with

$S_{N\,Obj}$	Rated apparent power of the protective object
$U_{N\,Obj}$	Rated voltage of the protected object or protected transformer winding.

For a winding with parameterised voltage according to Section 2.1.5 calculated voltage is valid.

For transformers the actual pickup values for single or two-phase tests depend on the vector group of the transformer; single-phase tests also depend on the starpoint condition and current processing. This corresponds to conventional circuitry when current is fed in via matching transformers.

To obtain the actual pickup value, the set value has to be multiplied with the vector group factor k_{VG} and the following equation:

$$\frac{I_{N\ Transf}}{I_{N\ CT\ prim}} \cdot k_{VG}$$

The following table shows these changes as a factor k_{VG} depending on the vector group and the type of fault, for three-phase transformers.

Table 3-26 Correction Factor k_{VG} depending on vector group and fault type

Type of Fault	**Reference Winding (high voltage)**	**even VG numeral (0, 2, 4, 6, 8, 10)**	**uneven VG numeral (1, 3, 5, 7, 9, 11)**
3-phase	1	1	1
2-phase	1	1	$\sqrt{3}/2 \approx 0{,}866$
single-phase with I_0 elimination	3/2 = 1,5	3/2 = 1,5	$\sqrt{3} \approx 1{,}73$
single-phase without I_0 elimination	1	1	$\frac{3}{1+\sqrt{3}} \approx 1.1$

Example:

three-phase transformer	S_N = 57 MVA
Vector Group	Yd5
Rated voltage (high-voltage winding)	U_N = 110 kV
Current Transformer	300 A/1 A
Rated voltage (high-voltage winding)	U_N = 25 kV
Current Transformer	1500 A / 1 A

The following applies to the high voltage winding:

$$I_{N\ Transf} = \frac{S_{N\ Transf}\,[MVA] \cdot 1000}{\sqrt{3} \cdot U_{N\ Winding}\,[kV]}\ [A] = \frac{57\,[MVA] \cdot 1000}{\sqrt{3} \cdot 110\ [kV]}\ [A] = 299\ A$$

In this case the rated current of the winding is practically equal to the current transformer rated current. Thus, the pickup value (referred to the rated relay current) complies with the setting value **I-DIFF>** of the device (k_{VG} = 1 for reference winding). For single-phase testing with zero sequence current elimination, a pickup value 1.5 times higher must be expected.

The following applies to the low voltage winding:

$$I_{N\ Transf} = \frac{S_{N\ Transf}\,[MVA] \cdot 1000}{\sqrt{3} \cdot U_{N\ Winding}\,[kV]}\ [A] = \frac{57\,[MVA] \cdot 1000}{\sqrt{3} \cdot 25\ [kV]}\ [A] = 1316\ A$$

When testing this winding, the pickup value (referred to the rated device current) will amount to

$$\frac{I_{Pickup}}{I_{N\ Device}} = \frac{I_{N\ Transf}}{I_{N\ CT\ prim}} \cdot k_{VG} \cdot I\ DIFF> = \frac{1316\ A}{1500\ A} \cdot k_{VG} \cdot IDIFF>$$
$$= 0.877 \cdot k_{VG} \cdot IDIFF>$$

Because of the odd vector group numeral, the following pickup values apply (Table)

3-phase $k_{VG} = 1$

$$\frac{I_{Pickup}}{I_{N\ Device}} = 0.877 \cdot IDIFF >$$

2-phase $k_{VG} = \sqrt{3}/2$

$$\frac{I_{Pickup}}{I_{N\ Device}} = 0.760 \cdot IDIFF >$$

1-phase $k_{VG} = \sqrt{3}$

$$\frac{I_{Pickup}}{I_{N\ Device}} = 1.52 \cdot IDIFF >$$

Flexible Functions

While the protection, supervision and measuring functions implemented in the device and part of the device firmware are "fixed", the flexible functions are individually configured (see Section 2.1.4 under margin heading „Flexible Functions“). Configuration testing is best performed using secondary testing, as the internal connections have to be checked. Verification of the system connections is contained in a later primary commissioning (Section 3.3 under „Circuit Breaker Failure Protection Tests“).

In these secondary testings mainly the correct assignments of flexible function to the analogue measured inputs are verified, as well as to the binary in/outputs.

Every flexible function is individually checked, as each was individually configured.

Current Functions

For flexible functions with Current Input test currents are fed into the current input, i.e. one after the other, those that are relevant to the tested flexible functions. For functions working on exceeding currents a slowly increased test current is applied until the function trips. Value undershooting above a pickup value it is decreased. Keep in mind that the corresponding message can be delayed if a time delay is set.



Caution!

Tests with currents that exceed more than 4 times the rated device current cause an overload of the input circuits and may only be performed for a short time.

See Technical Data

Afterwards the device has to cool off!

When checking pickup values keep in mind:

- If the current function is assigned to one side of the main protective object, the pickup values are referred to the rated current ($I/I_{N\,S}$). Magnitude factors are included. The rated current of the side can be determined analogue to the equations above under :Differential Protection". The test current has to be converted to secondary value.
- If the current function is assigned to a measured location and the pickup values are set secondary, the pickup value equals the secondary setting value.

- If the current function is assigned to a measured location and the pickup values are set primary, the setting value is to be converted to secondary value, so that the pickup value at the secondary test current is maintained. For the conversion the transformation of the current transformer (set for this device measuring input) is important.
- Tests for positive and negative sequence system currents are easiest with three-phase symmetrical testing. The positive sequence system can be obtained by symmetrical test currents, the negative sequence system by exchanging two phases. The setting values I1 and I2 correspond to the magnitude of each test current. For single-phase testing the positive and negative sequence currents are $^1/_3$ of the test current.
- Testing the zero system can be done single-phase at any of the three-phase current inputs. Zero sequence current is set to $3 \cdot I_0$, the test current corresponds to the must-pickup value.

Voltage Functions

For flexible functions with Voltage Detection the test voltages are fed to into the single-phase or to the voltage measuring inputs. This is also valid for the frequency function. A symmetrical three-phase voltage source is recommended. If testing takes place with a single-phase current source, special considerations are applicable, which will still be given. For functions working on exceeding voltages slowly increased test voltage is applied until the function trips. Value undershooting above a pickup value it is decreased. Keep in mind that the corresponding message can be delayed if a time delay is set.



Caution!

Tests with voltages that exceed more than 170 V at the voltage input terminals cause an overload of the input circuits and may only be performed for a short time.

See Technical Data

Afterwards the device has to cool off!

When checking pickup values keep in mind:

- Valid for all voltages is that the secondary settings are done in volts. If primary values were set, these are to be converted to secondary values via the voltage transformer data.
- If a single voltage, monitored by the flexible function, is to be tested, check the voltage measuring input in single-phase.
- If the phase-to-earth voltages important, do the testing at the three-phase voltage measuring inputs; this can be done three-phase or single-phase (after each other for every phase). When testing for voltage decrease the not tested voltages have to lie above the pickup value, so that triggering can be prevented.
- If the phase-to-phase voltages are important, three-phase testing is recommended. Otherwise make sure that the test voltage lies above both measuring inputs for the connected voltage. When testing voltage decrease the not tested phase must receive a sufficiently high voltage, so that the voltages connected to it lie above the pickup value.

- Tests for positive and negative sequence system voltages are easiest with three-phase symmetrical testing. The positive sequence system can be obtained by symmetrical test voltages, the negative sequence system by exchanging two phases. The setting value U_1 and U_2 correspond to the magnitude of every test voltage against starpoint. For single-phase testing the positive and negative sequence voltage are $^1/_3$ of the test voltage.
- Testing the zero system can be done single-phase at any of the three-phase voltage inputs. Zero sequence voltage is set to $3 \cdot I_0$, the test voltage corresponds to the must-pickup value.
- If a flexible function is configured for frequency monitoring, the pickup value can only be tested with a voltage source with variable frequency. A special test is not needed, as the device always determines the frequency from the positive sequence system of the three phase voltages. A possibly wrong allocation of the measuring quantities for the frequency determination is therefore excluded.

Power Functions

For flexible functions with power functions test voltages and currents are needed. Voltages are applied to the three voltage measuring inputs and the currents fed into those current measuring inputs, that the voltages are assigned according to Section 2.1.4 under "Assignment of Voltage Measuring Inputs“.

Important for the load direction and signs:

- the polarity of the test quantities,
- setting of the polarity for the current measuring location/side in the test, according to polarity setting (e.g. Address 511 **STRPNT->OBJ M1** for measuring location 1),
- setting for the sign of power under Address 1107 **P,Q sign** in system data 2.

For default settings the active power for the three-phase testing with in-phase currents and voltages amounts to $\sqrt{3} \cdot U_{test} \cdot I_{test}$ (U_{test} phase-phase). For single-phase testing with in-phase test quantities $^1/_9$ of the three-phase value as the power is calculated from the positive-sequence systems, which amount to $^1/_3$ each in the currents as well as in the voltages.

Reactive power can only be tested single-phase if a phase displacement between current and voltage is possible. With three-phase test quantities, reactive power can be simulated by phase exchange, although a phase displacement between currents and voltages is not possible. The following table gives examples. Here, the factors for active and reactive power refer to the power $S = \sqrt{3} \cdot U_{test} \cdot I_{test}$. The currents are in phase segregated connection, the voltages have been swapped cyclically. An anti-cyclic exchange (e.g. L2 $\leftrightarrow$ L3) is not permissible as the positive-sequence system would amount to zero in that case.

Table 3-27 Reactive Power Simulation by means of Phase Exchange

Test Quantities I	Test values U	Active Power	Reactive power
I_{L1} at input I_{L1} I_{L2} at input I_{L2} I_{L3} at input I_{L3}	U_{L1} at input U_{L1} U_{L2} at input U_{L2} U_{L3} at input U_{L3}	1	≈0
I_{L1} at input I_{L1} I_{L2} at input I_{L2} I_{L3} at input I_{L3}	U_{L1} at input U_{L1} U_{L2} at input U_{L2} U_{L3} at input U_{L3}	–0,5	0,866
I_{L1} at input I_{L1} I_{L2} at input I_{L2} I_{L3} at input I_{L3}	U_{L3} at input U_{L1} U_{L1} at input U_{L2} U_{L2} at input U_{L3}	–0,5	–0,866

Termination of Tests

Secondary feeding of test currents are still required for the tests of the circuit breaker failure protection as set out below. If no further circuit breaker failure protection needs to be tested, all secondary test connections must be removed.

Should you have changed setting values for secondary tests, these should now be set to required setpoints.

3.3.7 Circuit Breaker Failure Protection Tests

If the device is equipped with the breaker failure protection and this function is used, the integration of this protection function into the system must be tested under practical conditions.

Because of the manifold applications and various configuration possibilities of the plant it is not possible to give a detailed description of the necessary test steps. It is important to consider the local conditions and the protection and plant drawings.

Before starting the circuit tests it is recommended to isolate the circuit breaker of the feeder to be tested at both ends, i.e. line disconnectors and busbar disconnectors should be open so that the breaker can be operated without risk.



Caution!

Also for tests on the local circuit breaker of the feeder a trip command to the surrounding circuit breakers can be issued for the busbar.

Non-observance of the following measure can result in minor personal injury or property damage.

Therefore, primarily it is recommended to interrupt the tripping commands to the adjacent (busbar) breakers, e.g. by interrupting the corresponding pickup voltage supply.

The trip command of other protection functions is made ineffective so that the local breaker can be tripped only by the breaker failure protection function.

Although the following list does not claim to be complete, it may also contain points which are to be ignored in the current application.

Circuit Breaker Auxiliary Contacts

The circuit breaker auxiliary contact(s) form an essential part of the breaker failure protection system in case they have been connected to the device. Make sure that the correct assignment has been checked. Make sure that the measured currents for breaker failure protection (CTs), the tested circuit breaker, and its auxiliary contact(s) relate to the same measuring location or side of the protected object.

External Initiation Conditions

If the breaker failure protection is intended to be initiated by external protection devices, each of the external initiation conditions must be checked.

In order for the breaker failure protection to be started, a current must flow at least via the monitored phase. This may be a secondary injected current.

- Start by trip command of the external protection: binary input >CBF Start (No 1431) in spontaneous or fault annunciations.
- Following initiation the annunciation CBF Pup. external (No 1457) must appear in the fault annunciations (trip log) or in the spontaneous annunciations.
- With two-stage breaker failure protection, the trip repetition command to the local circuit breaker is issued after the delay time **T1** (address 7015), and the indication CBF TRIP T1 (No 1492).
- With single- or two-stage failure protection, the trip repetition command to the local circuit breaker is issued after the delay time **T2** (address 7016), and the indication CBF TRIP T2 (No 1494)

Switch off test current.

If start is possible without current flow:

- Close tested circuit breaker while the disconnectors at both sides are open.
- Start by trip command of the external protection:

  Binary input >CBF Start (No 1431) in the spontaneous or fault annunciations.
- Following initiation the annunciation CBF Pup. external (No 1457) must appear in the fault annunciations (trip log) or in the spontaneous annunciations.
- With two-stage breaker failure protection, the trip repetition command to the local circuit breaker is issued after the delay time **T1** (address 7015), and the indication CBF TRIP T1 (No 1492).
- With single- or two-stage failure protection, the trip repetition command to the local circuit breaker is issued after the delay time **T2** (address 7016), and the indication CBF TRIP T2 (No 1494).

Reopen the local circuit breaker.

Busbar Trip

The most important thing is the check of the correct distribution of the trip commands to the adjacent circuit breakers in case of breaker failure.

The adjacent circuit breakers are those of all feeders which must be tripped in order to ensure interruption of the fault current should the local breaker fail. In other words, the adjacent breakers are those of all feeders which may feed the same busbar or busbar section as the faulty feeder. In case of a power transformer, the adjacent breakers may include the breaker of the lower-voltage side (or any other side) of the transformer, if the upper voltage side breaker is to be monitored, and vice versa.

A general detailed test guide cannot be specified because the layout of the adjacent circuit breakers largely depends on the system topology.

In particular with multiple busbars the trip distribution logic for the surrounding circuit breakers must be checked. Here check for every busbar section that all circuit breakers which are connected to the same busbar section as the feeder circuit breaker under observation are tripped, and no other breakers.

Termination of the Checks

All temporary measures taken for testing must be undone. This is to ensure that all switching devices of the system are in the correct state, that interrupted trigger connections are restored and that control voltages are activated. Setting values that may have been changed for the tests, must be corrected and protective functions that were switched, must be set to the intended switching state (ON or OFF).

3.3.8 Symmetrical, Primary Current Tests on the Protected Object

If secondary test equipment is connected to the device, it must be removed; any existing test switches should be in normal operating position.



Note

It should be expected that tripping occurs if connections were wrong.

The measured quantities of the following tests can be read out from the PC using a web browser via the WEB monitor. This provides comfortable read-out possibilities for all measured values with visualisation using phasor diagrams.

If you choose to work with the Web-monitor, please note the Help files referring to the Web-monitor. The IP address required for the browser depends on the port used for connecting the PC:

- for connection at the front: **operator interface** IP address **141.141.255.160**
- Connection to the rear **service interface**: IP address **141.143.255.160**

The transmission speed is 115 kBaud.

The following descriptions refer to read-out of measured values with DIGSI. All measured values can be read out from the device.

Preparation of Symmetrical Current Tests

At first commissioning, current checks must be performed before the protected object is energised for the first time. This ensures that the differential protection is operative as a short-circuit protection during the first excitation of the protected object with voltage. If current checks are only possible with the protected object under voltage (e.g. power transformers in networks when no low-voltage test equipment is available), it is imperative that a backup protection, e.g. time overcurrent protection, be commissioned before, which operates at least at the feeding side. The trip circuits of other protection devices (e.g. Buchholz protection) must remain operative as well.

If more than 2 measuring locations are present for the main protected object, the test must be repeated such that each possible current path through the protected object has been part of a test. It is not necessary to test every possible current path. Thus, it is advised to start with measuring location M1 of the main protected object and to check this measuring location against all others. If a side has more than one measuring location, each location must be included in a test. The other measuring locations remain current-free.

If further three-phase protected objects are present, these are tested individually according to their topology.

The test setup varies dependent of the application.

DANGER!

Operations in the primary area must be performed only with plant sections voltage-free and earthed! Perilous voltages may occur even on voltage-free plant sections due to capacitive influence caused by other live sections!

On network power transformers and asynchronous machines a low-voltage test is preferably used. A low-voltage current source is used to energise the protected object, which is completely disconnected from the network. A short-circuit bridge, which is capable of carrying the test current, is installed outside the protected zone and allows the symmetrical test current to flow. On transformers, the test source is normally connected at the primary side, and the short-circuit bridges are on the lower voltage side.

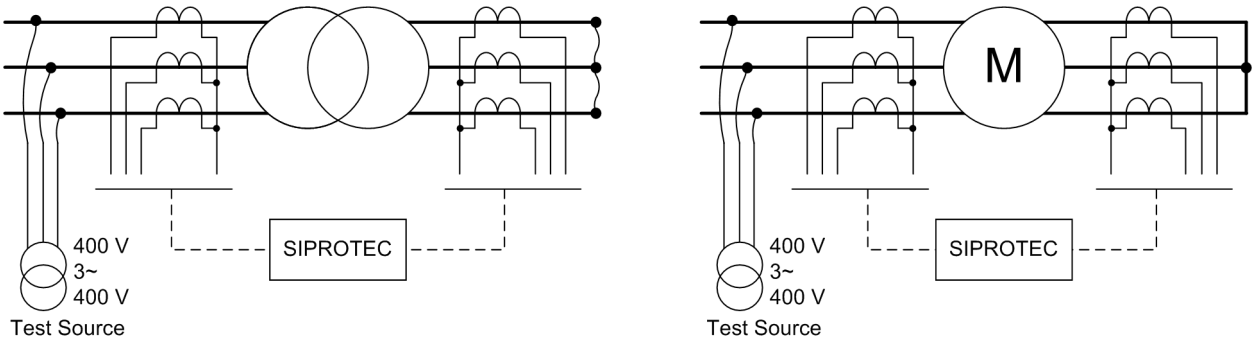

Figure 3-25 Test installation with low-voltage source — example for transformer and motor

On power station unit transformers and synchronous machines, the checks are performed during the current tests, with the generator itself supplying the test current. The current is produced by a short-circuit bridge which is installed outside the protected zone and is capable of carrying generator rated current for a short time.

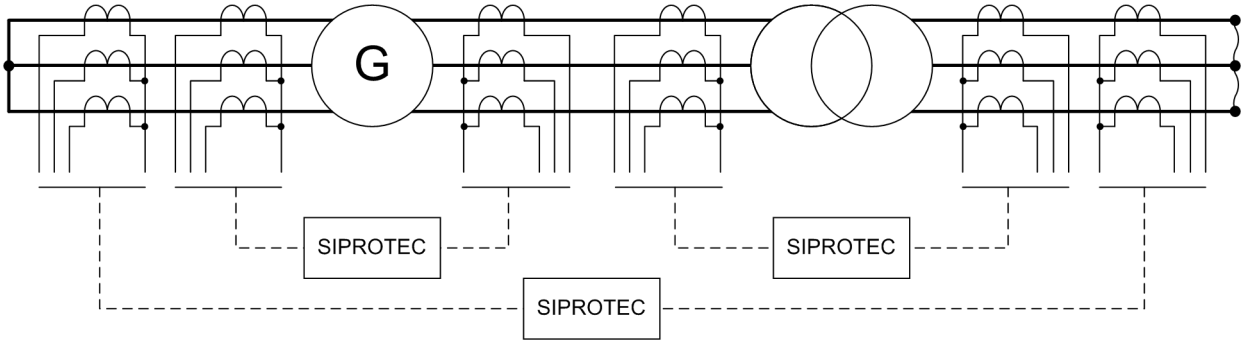

Figure 3-26 Test installation at power station with generator as voltage source — example

On busbars and short lines a low-voltage test source can be used or alternatively one can test with load current. In the latter case the above hints about backup protection must be observed!

With the single-phase differential protection for busbars with more than 2 feeders, symmetrical current test is not necessary (but permissible, of course). The test can be carried out using a single-phase current source. However, current tests must be per-

formed for each possible current path (e.g. feeder 1 against feeder 2, feeder 1 against feeder 3, etc.) Please first read the notes contained in the section „Current Testing for Busbar Protection“.

Implementation of Symmetrical Current Tests

Before beginning with the first current test, check the correct polarity setting for measuring location 1 on the basis of address 511 **STRPNT->OBJ M1** and compare it with the actual current connections. Refer to Section 2.1.4 under margin heading „Current Transformer Data for Three-phase Measuring Locations“ for more details. This check is also important for devices with voltage inputs as all further wrong polarities will not be recognised because the protection functions may operate even correctly if all polarities are wrong. Only during power check would the errors be recognised.

For these commissioning tests the test current must be at least 2 % of the rated relay current for each phase.

These tests cannot replace visual inspection of the correct current transformer connections. Therefore, a prerequisite for this test is that the system connections have been completely checked.

The operational measured values supplied by the 7UT613/63x allow fast commissioning without external instruments. The following indices are used for the display of measured values:

The equation symbol for current (I, φ) is following by the phase identifier L1 and by a number that identifies the side (e.g. the transformer winding) or the measuring location, example:

$\mathbf{I_{L1\ S1}}$ current in phase **L1** on side **S1**,

$\mathbf{I_{L1\ M1}}$ current in phase **L1** at the measuring location **M1**.

The following procedure applies to a three-phase protected object for measuring location M1 against measuring location M2. For transformers it is assumed that measuring location 1 is assigned to side 1, and this is the high-voltage side of the transformer. The other possible current paths are tested in an analogous way.

- Switch on the test current or start up the generator and bring it to nominal speed and excite it to the required test current. None of the measurement monitoring functions in the 7UT613/63x must respond. If there was a fault annunciation, however, the operational annunciations or spontaneous annunciations could be checked to investigate the reason for it (refer also to the SIPROTEC 4 System Description /1/).
  - At the indication of imbalance there might actually be asymmetries of the primary system. If they are part of normal operation, the corresponding monitoring function is set less sensitive (see Section 2.19.1, under margin heading „Measured Value Supervision“).
  - In general, the phase rotation is a clockwise phase rotation. If the system has an anti-clockwise phase rotation, this must have been considered when the power system data was set (address 271 **PHASE SEQ.**, refer to Subsection 2.1.4 under margin heading „Phase Sequence“). Wrong phase rotation is indicated with the annunciation „Fail Ph. Seq. I“ (No 175). The measuring location with wrong phase rotation is also stated. The phase allocation of the measured value inputs must be checked and corrected, if required, after the measuring location has been isolated. The phase rotation check must then be repeated.

- Amplitude measurement with switched on test current:

  Compare the indicated current magnitudes under **measurement** → **secondary** → **operational measured values secondary** with the actually flowing values:

  This applies for all measuring locations included in the test.

  Note: The **WEB Monitor** provides comfortable read-out possibilities for all measured values with visualisation using phasor diagrams (Figure 3-27).

  If deviations occur that cannot be explained by measuring tolerances, either a connection or the test setup is wrong:

  – Switch off the test source and the protected object (shut down the generator) and earth it,

  – Re-check the assignment or the tested measuring location (Section 2.1.4 under margin heading „Assignment of 3-phase measuring locations“).

  – Re-check the settings for the magnitude matching (Subsection 2.1.4 under margin heading „Current Transformer Data for 3-phase Measuring Locations“).

  – Re-check the plant connections to the device and the test arrangement and correct them.

    If a substantial zero sequence current 3I0 occurs one or two of the currents of the corresponding side must have a reversed polarity.

    3I0 ≈ phase current → one or two phase currents are missing;

    3I0 ≈ double phase current → one or two phase currents with reversed polarity.

  – Repeat test and re-check the current magnitudes.

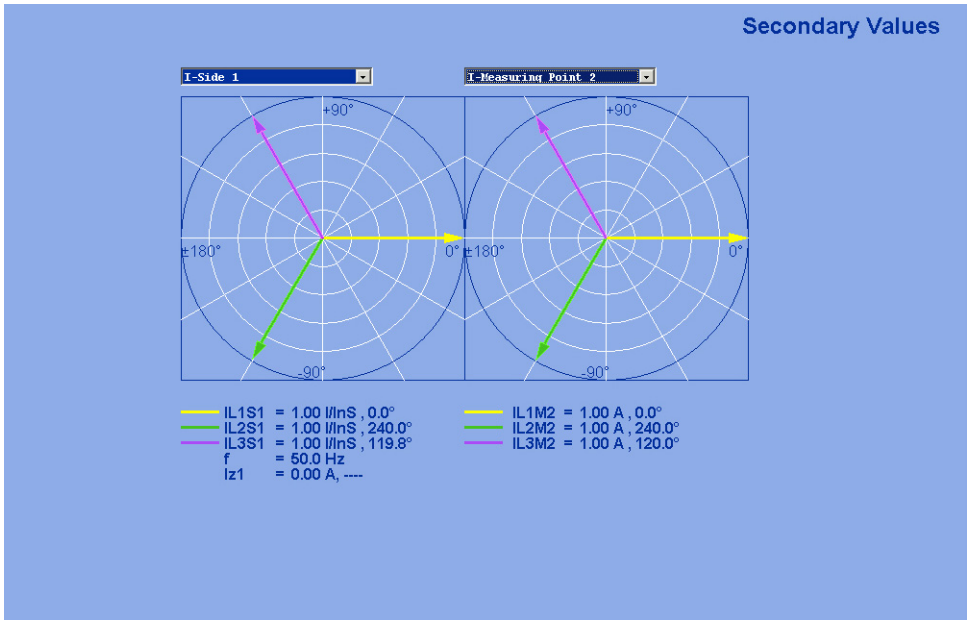

Figure 3-27 Phasor Diagram of the Secondary Measured Values — Example

- Phase angle measurement for measuring location M1 with test current:

  Check the phase angle under **measurement values → secondary → phase angles** of side 1 of the protected object. All angles are referred to I_{L1M1}. The following values must result approximately for a clockwise phase rotation:

  $\varphi_{L1\,M1} \approx 0°$

  $\varphi_{L2\,M1} \approx 240°$

  $\varphi_{L3\,M1} \approx 120°$

  If the angles are wrong, reverse polarity or swapped phase connections on measuring location M1 may be the cause.

  – Switch off the test source and the protected object (shut down the generator) and earth it.

  – Re-check the plant connections to the device and the test arrangement and correct them.

  – Repeat test and re-check the current angles.

- Phase angle measurement for measuring location M2 with test current:

  Check the phase angle under **measurement values → secondary → phase angles** of measuring location M2 of the protected object. All angles are referred to I_{L1M1}.

  Consider that always the currents flowing into the protected object are defined as positive: That means that, with through-flowing in-phase currents, the currents leaving the protected object at measuring location M2, have reversed polarity (180° phase displacement) against the corresponding in-flowing currents at measuring location M1.

  Exception: With transverse differential protection, the currents of the corresponding phase have equal phase!

  For clockwise phase rotation and without phase displacement, the angles should be approximately:

  $\varphi_{L1\,M2} \approx 180°$

  $\varphi_{L2\,M2} \approx 60°$

  $\varphi_{L3\,M2} \approx 300°$

  When measuring across a power transformer, approximately the values according to Table 3-28 result for clockwise phase rotation:

Table 3-28 Displayed phase angle dependent on the protected object (three-phase)

Protected Object	Generator/Motor/ Busbar/Line	Transformer with Vector Group Numeral [1]											
Phase Angle ↓		0	1	2	3	4	5	6	7	8	9	10	11
φ_{L1M2}	180°	180°	150°	120°	90°	60°	30°	0°	330°	300°	270°	240°	210°
φ_{L2M2}	60°	60°	30°	0°	330°	300°	270°	240°	210°	180°	150°	120°	90°
φ_{L3M2}	300°	300°	270°	240°	210°	180°	150°	120°	90°	60°	30°	0°	330°

[1] Angles are valid if the high voltage side is defined as side 1, otherwise read 360° minus the stated angle

If considerable deviations occur, reversed polarity or swapped phases are expected on measuring location M2 or the actually tested measuring location.

- Deviation in individual phases indicates reversed polarity in the related phase current connection or acyclically swapped phases.
- If all phase angles differ by the same value, phase current connections of side 2 are cyclically swapped or the connection group of the transformer differs from the set group. In the latter case, re-check the matching parameters (subsection 2.1.4 under margin heading „Object Data with Transformers“ under addresses 314 for side 1, 324 and 325 for side 2, 334 and 335 for side 3, etc. Consider also the assignment of the measuring location to the sides and the sides to the protected object.
- If all phase angles differ by 180°, the polarity of the complete CT set for measuring location M2 is incorrect. Check and correct the applicable power system data (cf. subsection 2.1.4 under margin heading „Current Transformer Data for 3-phase Measuring Locations“):

  Address 511 **STRPNT->OBJ M1** for measuring location 1,

  address 521 **STRPNT->OBJ M2** for measuring location 2, etc.

  For 1-phase busbar protection see section 2.1.4 under margin heading „Current Transformer Data in Single-phase Busbar Protection“.

If connection errors are assumed:

- Switch off the test source and the protected object (shut down the generator) and earth it.
- Re-check the plant connections to the device and the test arrangement and correct them. Check also the corresponding setting for the CT data.
- Repeat test and re-check the current angles.

All pre-described test must be repeated until every measuring location of the main protected object has been included in at least one test.

Measuring Differential and Restraint Currents

Before the tests with symmetrical currents are terminated, the differential and restraint currents are examined. Even if the above tests with symmetrical current should to a large extent have detected connection errors, errors concerning current matching and vector group can nevertheless not be completely excluded.

The differential and restraint currents are referred to the rated currents of the protected object. This must be considered when they are compared with the test currents. With more than 2 sides, the highest rated current of any side of the protected object is the rated object current.

- Read out the differential and restraint currents under **Measured Values** → **Percentage** → **Measured Values I-diff; I-stab**.

  In the „WEB Monitor“, the differential and restraint currents are displayed as a graph in a characteristics diagram (figure 3-28).

  – The differential currents „Diff L1:“, „Diff L2:“, „Diff L3:“ must be low, i.e. at least one scale less than the through-flowing test currents.

  – The restraint currents „Res. L1:“, „Res. L2:“, „Res. L3:“ correspond to twice the through-flowing test currents.

– If there are differential currents in the size of the restraint currents (approximately twice the through-flowing test current), you may assume a polarity reversal of the current transformer(s) at one side. Check the polarity again and set it right after short-circuiting all six current transformers. If you have modified these current transformers, repeat the angle test.

– If there are differential currents which are nearly equal in all three phases, matching of the measured values may be erroneous. Wrong vector group of a power transformer can be excluded because it should already have been detected during the phase angle test. Re-check the settings for current matching. These are mainly the data of the protected object (Power System Data 1, Section 2.1.4):

  For all kinds of power transformers, addresses 311 and 312 for side 1 under „Object Data with Transformers“ and accordingly the parameters for the other side(s) under test. Furthermore, addresses 512 and 513 for measuring location M1 under „Current Transformer Data for 3-phase Measuring Locations“, and accordingly the parameters for the other measuring location(s) under test.

  For generators, motors, reactors, addresses 361 and 362 under „Object Data with Generators, Motors or Reactors“, and addresses 512 and 513 for measuring location 1 under „Current Transformer Data for 3-phase Measuring Locations“ and accordingly the parameters for the other measuring location(s) under test.

  For mini-busbars (3-phase), address 372 under „Object Data with Mini-Busbars or Short Lines" (3-phase)“ for feeder 1 and accordingly the parameters for the other feeder(s) under test, and addresses 512 and 513 for measuring location 1 under „Current Transformer Data for 3-phase Measuring Locations“ and accordingly the parameters for the other measuring location(s) under test.

  For single-phase busbar protection, address 381 under „Object Data with Busbars (1-phase Connection) with up to 6 or 9 or 12 feeders“ and addresses 562 and 563 under „Current Transformer Data for single-phase Busbar Protection“ for feeder 1 and accordingly the parameters for the other feeders under test. If interposed summation transformers are used, matching errors can be caused by wrong connections at the summation CTs.

- Finally, switch off the test source and the protected object (shut down the generator).
- If parameter settings have been changed for the tests, reset them to the values necessary for operation.

Please keep in mind that the previous tests must be repeated for each current path.

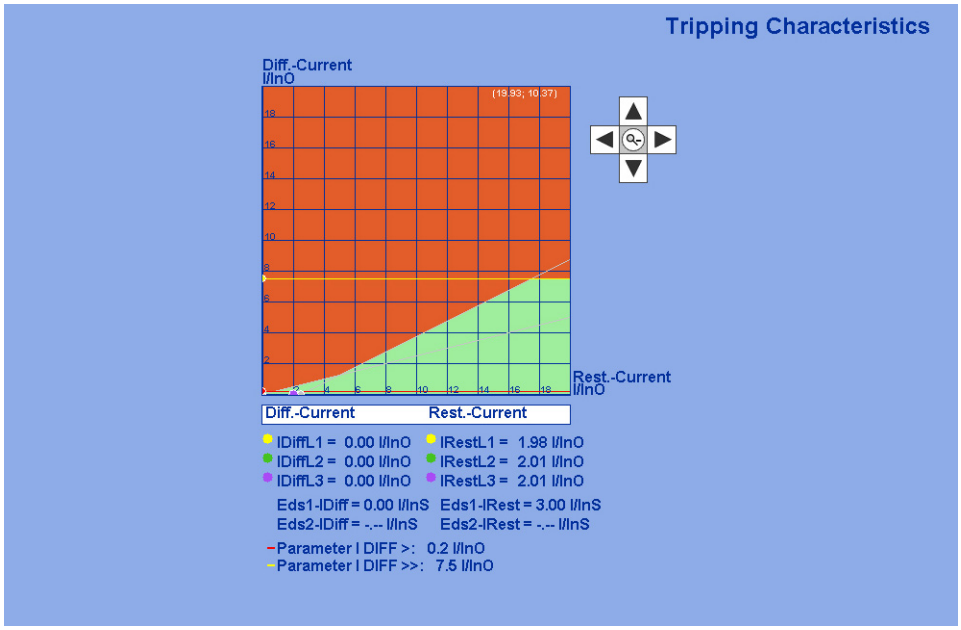

Figure 3-28 Differential and Restraint Currents - Example of Plausible Measurements

3.3.9 Zero Sequence Current Tests on the Protected Object

The zero sequence current tests are only necessary if the starpoint of a three-phase object or a single-phase transformer is earthed on a side or winding. If more than one starpoint is earthed, then the zero sequence current test has to be performed for each earthed winding.

If the current between starpoint and earth is available and fed to one of the 1-phase current inputs of the device the polarity of the earth current (starpoint current) at a 1-phase current input is essential for zero sequence current inclusion of the differential protection and the restricted earth fault protection. If the starpoint current is not available then the zero sequence current tests serve for verification of the correct processing of the zero sequence currents in the differential protection.

Note

It must be taken into consideration that tripping may occur if connections were made wrong.

Preparation of Zero Sequence Current Tests

Zero sequence current measurements are always performed from that side or three-phase measuring location of the protected object where the starpoint is earthed, on auto-transformers from the high-voltage side. In transformers there must be a delta winding (d-winding or compensating winding). The sides which are not included in the tests remain open as the delta winding ensures low-ohmic termination of the earth current path.

The test arrangement varies with the application. Figures 3-29 to 3-36 show schematic examples of the test arrangement on a star-delta power transformer. The starpoint current is included into the tests. If it is not available the relevant connection is omitted (compare figure 3-29 with figure 3-30).

DANGER!

Operations in the primary area must be performed only with plant sections voltage-free and earthed! Perilous voltages may occur even on voltage-free plant sections due to capacitive influence caused by other live sections!

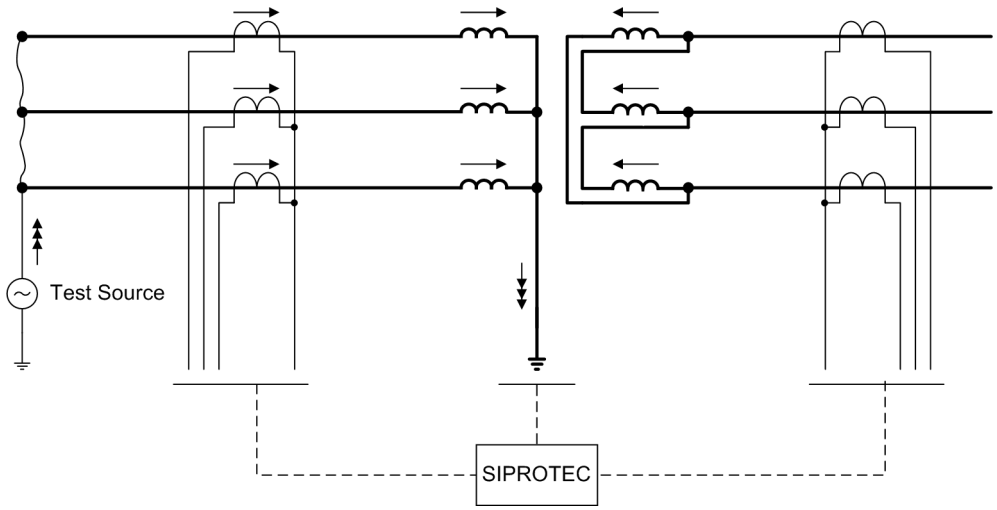

Figure 3-29 Zero sequence current measurement on a star-delta transformer — without inclusion of the starpoint current

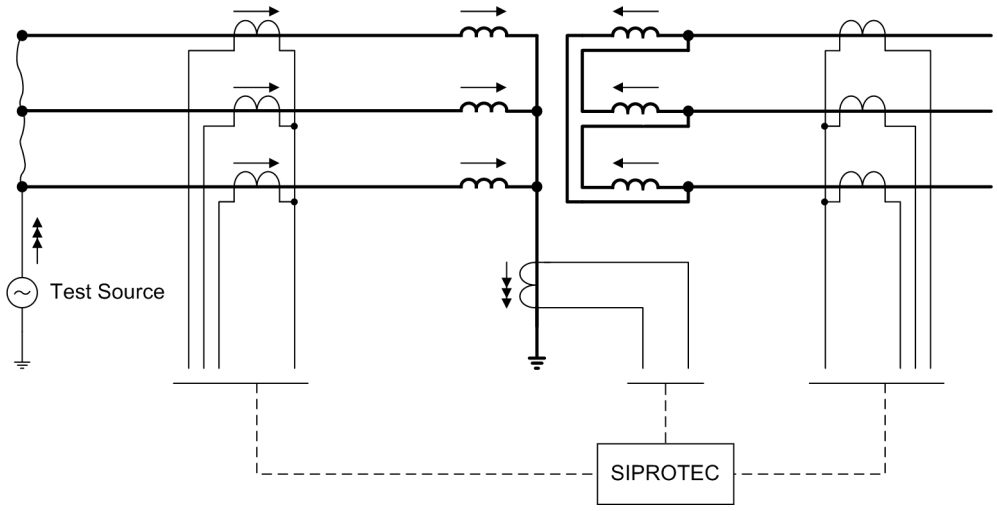

Figure 3-30 Zero sequence current measurement on a star-delta transformer

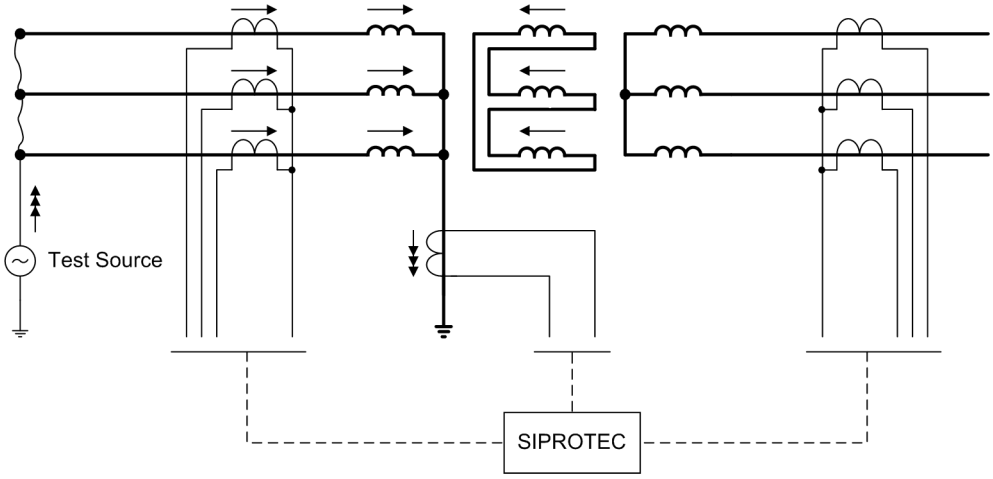

Figure 3-31 Zero sequence current measurement on a star-star transformer with compensation winding

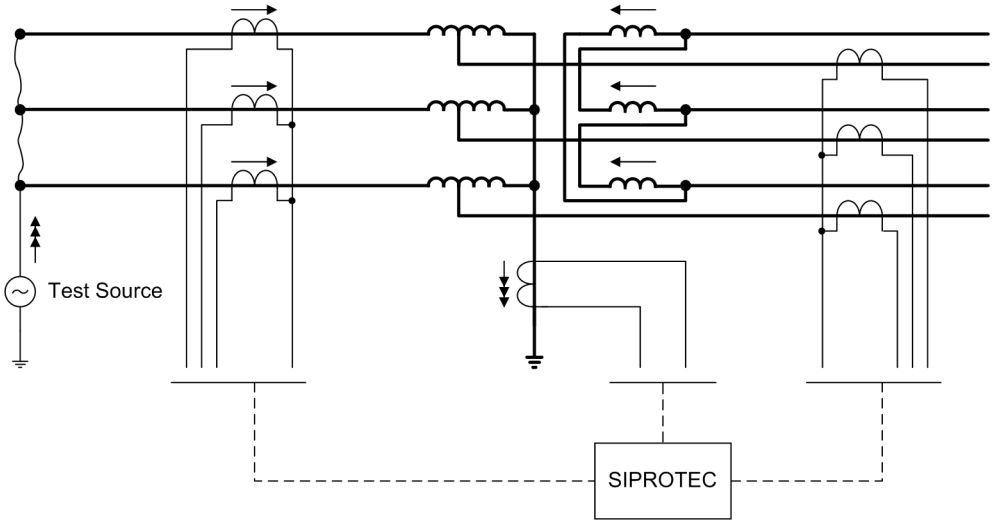

Figure 3-32 Zero sequence current measurement on an auto-transformer with compensation winding

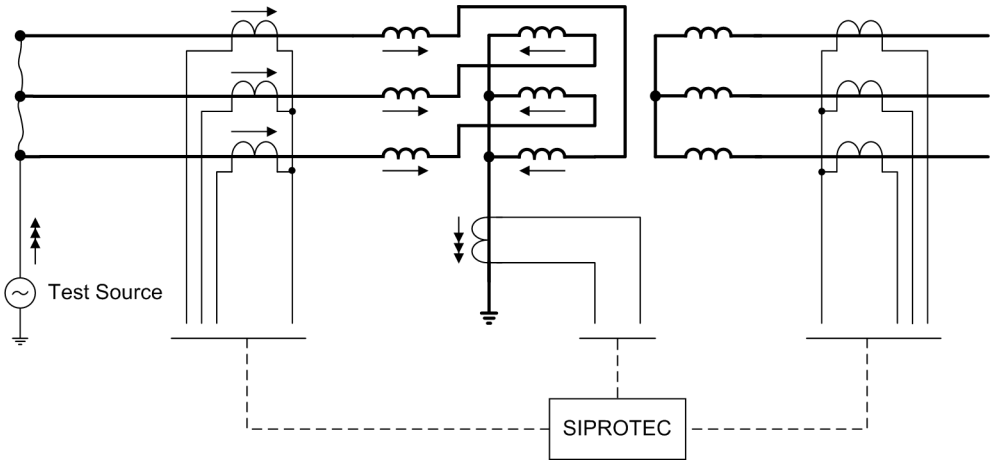

Figure 3-33 Zero sequence current measurement on a zig-zag-winding

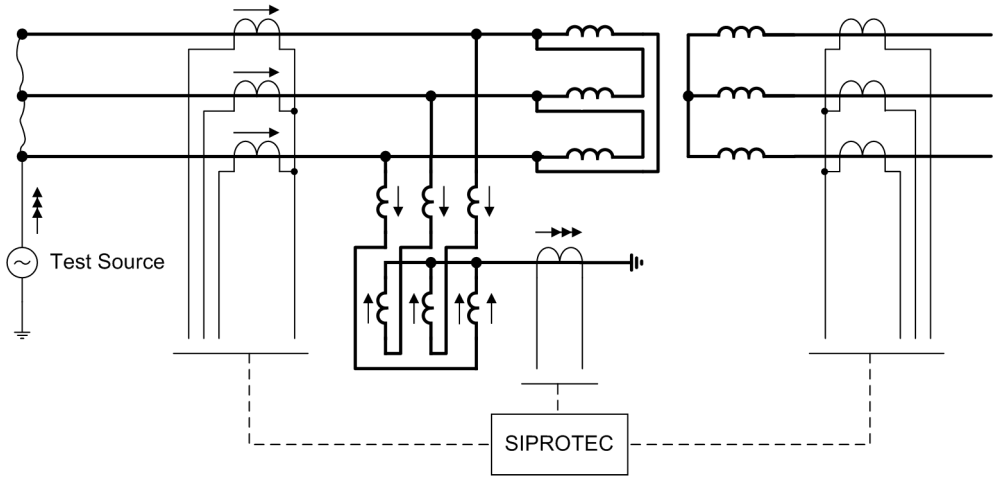

Figure 3-34 Zero sequence current measurement on a delta winding with neutral earthing reactor within the protected zone

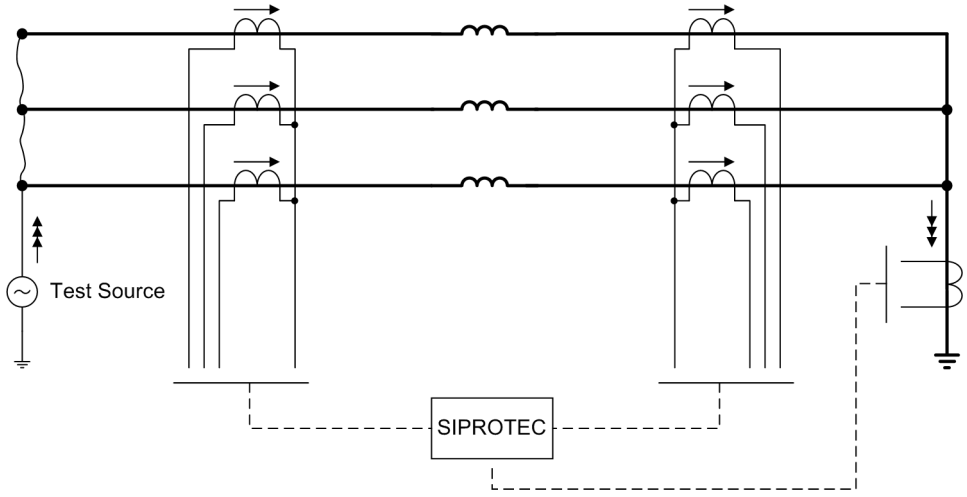

Figure 3-35 Zero sequence current measurement on an earthed series reactor (reactor, generator, motor)

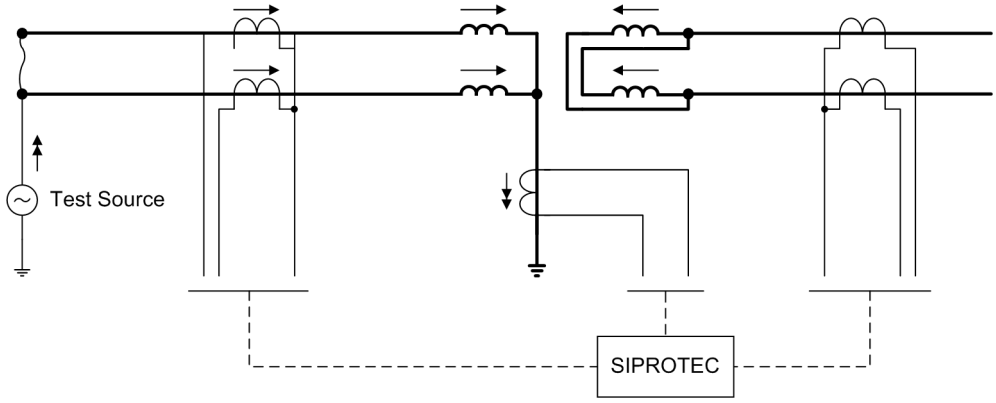

Figure 3-36 Zero sequence current measurement on an earthed single-phase transformer

Implementation of Zero Sequence Current Tests

For these commissioning tests, the zero sequence current must be at least 2 % of the rated relay current for each phase, i.e. the test current at least 6 %.

This test cannot replace visual inspection of the correct current transformer connections. Therefore, the inspection of these connections is a prerequisite.

- Switch on test current.
- Read out the current magnitudes:

  Compare the indicated current magnitudes under **measurement → secondary → operational measured values secondary** with the actually flowing values:

  – All phase currents of the tested measuring location correspond to approximately $^1/_3$ of the test current (for 1-phase transformers $^1/_2$),

  – 3I0 of the tested measuring location corresponds to the test current.

  – Phase currents and zero sequence current of the other measuring location are, on transformers, nearly 0.

  – The current at the auxiliary 1-phase current input corresponds to the test current — provided this current is available and included.

  Deviation can practically occur only for the single-phase current (if included) because the connection of the phase currents had been verified already during the symmetrical tests. In case of deviations:

  – Switch off the test source and the protected object (shut down the generator) and earth it.

  – Re-check the assignment or the tested 1-phase input (subsection 2.1.4 under margin heading „Assignment of Auxiliary 1-phase Measuring Locations“).

  – Re-check the settings for the magnitude matching (Subsection 2.1.4 under margin heading „Current Transformer Data for 1-phase Auxiliary Current Inputs“).

  – Check the plant connections to the device and the test arrangement and correct them.

  – Repeat test and re-check the current magnitudes.

Measuring Differential and Restraint Currents

The differential and restraint currents are referred to the rated currents of the tested side of the main protected object. If a zero sequence current test does not concern the main protected object but a different earthed object (e.g. a shunt reactor outside the main object), the base of the referred currents is the rated current of that 3-phase measuring location to which the 1-phase current input is assigned, i.e. the measuring location under test. This must be considered when they are compared with the test currents.

- Switch on test current.
- If the starpoint current is available:

  Read out the differential and restraint currents **I-Diff**; **I-Rest** under **Measurement → Percent Values → Differential and Restraint Currents**.

  – The differential current of the restricted earth fault protection $I_{Diff\ REF}$ must be low, at least one scale less than the test current.

  – The stabilisaing current $I_{Rest\ REF}$ corresponds to twice the test current.

– If the differential current is in the size of the restraint current (approximately twice the test current), you may assume a polarity reversal of the single-phase current transformer. Check the polarity again and compare it with the setting in address 711 **EARTH IX1 AT** if the auxiliary single-phase input IX1 is under test (cf. also subsection 2.1.4 under margin heading „Current Transformer Data for single-phase Auxiliary Current Inputs“), or accordingly the parameters for the actual input under test.

– If there is a differential current which does not correspond to twice the test current, the matching factor for the 1-phase input may be incorrect. Check the settings relevant for current matching. These are mainly the data of the protected object and its current transformers (Subsection 2.1.4):

– for power transformers addresses 313, 323 etc. (dependent on the tested winding), under margin heading „Object Data with Transformers“ and

– in all cases addresses 712, 713 or 722, 723 etc. (depending on the used 1-phase input), under margin heading „Current Transformer Data for Single-phase Auxiliary Current Inputs“.

- In all cases (whether or not the starpoint current is available):

  Check the differential currents $I_{Diff\ L1}$, $I_{Diff\ L2}$, $I_{Diff\ L3}$.

  – The differential currents must be low, at least one scale less than the test current. If considerable differential currents occur, re-check the settings for the starpoints:

  – Starpoint conditioning of a transformer: addresses 313 **STARPNT SIDE 1**, 323 **STARPNT SIDE 2**, etc. (depending on the tested winding) (Section 2.1.4, margin heading „Object Data with Transformers“), as well as

  – the assignment of the starpoint current transformer to the 1-phase current input under test: address 251, 252, etc. depending on the input under test, see Subsection 2.1.4 under margin heading „Assignment of Auxiliary 1-phase Measuring Locations“.

  – Countercheck: The restraint currents of the differential protection I_{RestL1}, $I_{Rest\ L2}$, $I_{Rest\ L3}$ are equally small. If all tests have been successful until now, this should be ensured.

- Finally, switch off the test source and the protected object (shut down the generator).
- If parameter settings have been changed for the tests, reset them to the values necessary for operation.

Please keep in mind that the previous tests must be repeated for each earthed side.

3.3.10 Current Tests for Busbar Protection

General

For single-phase busbar protection with one device per phase or with summation transformers, the same checks have to be performed as described in Subsection **Symmetrical Current Tests on the Protected Object**. Please observe the following four remarks:

- Checks are often performed with operational currents or primary testing devices. Please take note of all warnings you can find in the said section and be aware of the fact that you will require a backup protection at the supplying point.
- Checks have to be performed for every current path, beginning with the supplying feeder.

- The checks must be performed on one device per phase for each phase. In the following you can find some more information on summation transformers.
- However, each check is restricted on one current pair, i.e. on the one traversing testing current. Information on vector group matching and vectors (except the phase angle comparison of the traversing current = 180° at the sides tested) or similar is not relevant.

Summation Transformer Connection

If summation transformers are used, different connection possibilities exist. The following clarifications are based on the normal connection mode L1-L3-E. This connection variant and the connection mode L1-L2-L3 are shown in the following figures.

Single-phase primary tests are to be preferred, since they evoke clearer differences in the measured currents. They also detect connecting errors in the earth current path.

The measured current to be read out in the operational measured values only corresponds to the testing current if three-phase symmetrical check is performed. In other cases there are deviations which are listed in the figures as factor of the testing current.

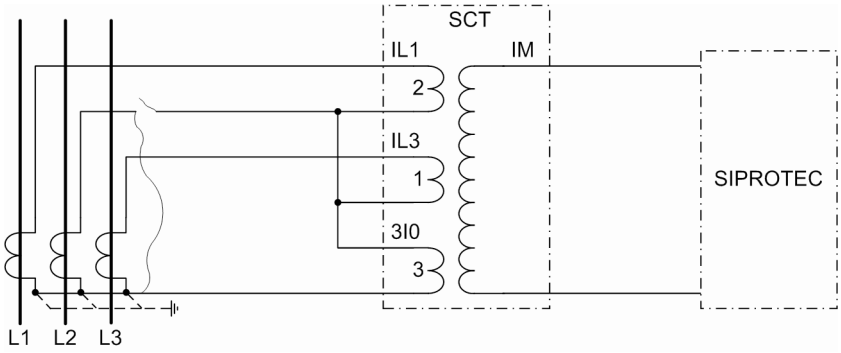

Figure 3-37 Summation Transformer Connection L1-L3-E

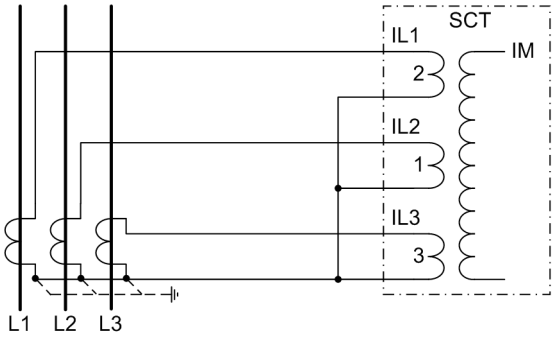

Test Current	Measured Current
L1-L2-L3 (sym.)	1.00
L1-L2	0.58
L2-L3	1.15
L3-L1	0.58
L1-E	1.15
L2-E	0.58
L3-E	1.73

Figure 3-38 Summation transformer connection L1-L2-L3

Deviations which cannot be explained by measuring tolerances may be caused by connection errors or matching errors of the summation transformers:

- Switch off the test source and the protected object and earth it,
- Check the plant connections to the device and the test arrangement and correct them.
- Repeat test and re-check the current magnitudes.

The phase angles must be 180° in all cases.

Check the differential and restraint currents for each phase.

If single-phase primary checks cannot be carried out but only symmetrical operational currents are available, polarity or connecting errors in the earth current path with summation transformer connection L1–L3–E will not be detected with the before-mentioned checks. In this case, asymmetry is to be achieved by secondary manipulation.

Therefore the current transformer of phase L2 is short-circuited as shown in figure 3-39.



DANGER!

Manipulations on the measuring current transformers must be performed with the utmost precaution!

Non-observance of the following measures will result in death, severe personal injury or substantial property damage.

Short-circuit the current transformers before disconnecting any current supply leads to the device!

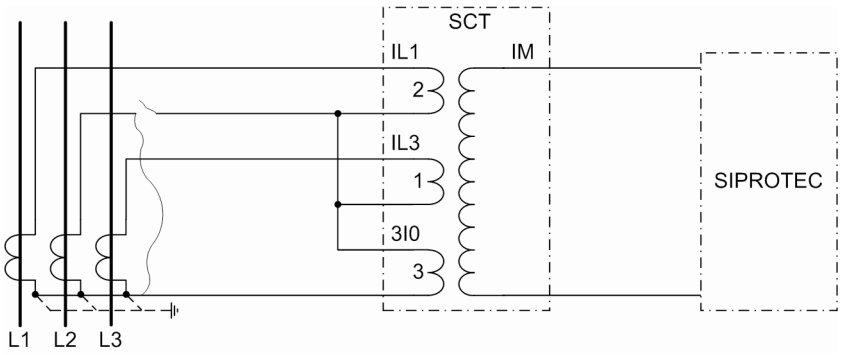

Figure 3-39 Asymmetrical test with summation transformer connection L1-L3-E

The measured current is now 2.65 times the current of the symmetrical test.

This test must be carried out for each summation CT.

3.3.11 Testing of the Non-Assigned 1-Phase Current Inputs

As far as single-phase current inputs belong to the main protected object, i.e. they are assigned to a side of the main protected object, they were already checked with the zero sequence current tests.

Even if they are not assigned to the main protected object but to a 3-phase measuring location of a further protected object (e.g. restricted earth fault protection for a separate neutral earthing reactor), the same procedure as for the zero sequence current applies. Perform the zero sequence current tests unless it has already been done.

Single-phase measured current inputs of the device can also be used for any desired 1-phase protection function. If this is an actual case and the same input has not yet

been checked as a starpoint current input of the main protected object, an additional check of this 1-phase input must be carried out.

The test methods depend widely on the application of the single-phase input.

By any means, the matching factors for the magnitude have to be checked (address 712, 713 etc. depending on the input under test; refer also to Subsection 2.1.4 under margin heading „Current Transformer Data for 1-phase Auxiliary Current Inputs“). Consider whether or not the input under test is a high-sensitivity input (address 255 for I_{X3} or 256 for I_{X4}, refer to subsection 2.1.4 under margin heading „High-Sensitivity Auxiliary 1-phase Measuring Locations“). Where applicable, consider the matching factors (addresses 734 and 744 respectively) when reading out the current magnitudes.

Polarity check is not required since only the current magnitude is processed.

With high-impedance protection the assigned 1-phase current corresponds to the fault current in the protected object. Polarity of all current transformers supplying the resistor whose current is measured must be uniform. For this purpose, traversing currents are used as for differential protection checks. Each current transformer must be included into a measurement. The measured current must not exceed, for each through-current test, half of the pickup value of the single-phase time overcurrent protection.

3.3.12 Checking the Voltage Connections and Polarity Check

Voltage and Phase Sequence Check

If the device is connected to voltage transformers, these connections are checked using primary values. For devices without voltage transformer connection this section can be bypassed.

The voltage transformer connections are tested for that measuring location or side to which they are assigned (address 261, refer to Section 2.1.4 under margin heading „Assignment of Voltage Measuring Inputs“).

- Having energised the voltage transformer set, none of the measurement monitoring functions in the device may respond.
  - If there is a fault annunciation, however, the event log or spontaneous annunciation could be checked to investigate the reason for it.
  - At the indication of voltage summation error check also the assignment of the single-phase voltage input and the matching factors. For further details see Section 2.1.4 under margin heading „Assignment of Voltage Measuring Inputs“.
  - At the indication of symmetry monitoring there might actually be asymmetries of the primary system. If they are part of normal operation, the corresponding monitoring function is set less sensitive (see Subsection 2.19.1.4 under margin heading „Voltage Balance“).

The voltages can be read on the display at the front, or called up in the PC via the operator or service interface, and compared with the actual measured quantities as primary or secondary values. Besides the magnitudes of the phase-to-phase and the phase-to-earth voltages, the phase angles can be read out, thus enabling to verify the correct phase sequence and polarity of individual voltage transformers. The voltages can also be read out with the „Web Monitor“ (see figure 3-40).

- The voltage magnitudes should be almost equal. All angles must be approximately 120° to each other in a 3-phase system.
  - If the measured quantities are not plausible, the connections must be checked and revised after switching off the measuring location. If the phase difference angle between two voltages is 60° instead of 120°, one voltage must be polarity-reversed. The same applies if there are phase-to-phase voltages which almost equal the phase-to-earth voltages instead of having a value that is √3 greater. The measurements are to be repeated after setting the connections right.
  - In general, the phase rotation is a clockwise phase rotation. If the system has an counter-clockwise phase rotation, this must have been considered when the power system data was set (address 271 **PHASE SEQ.**, refer to Subsection 2.1.4 under margin heading „Phase Sequence“). Wrong phase rotation is indicated with the annunciation „Fail Ph. Seq. U“ (No 176). The measured value allocation must be checked and corrected, if required, after the measuring location has been isolated. The phase rotation check must then be repeated.

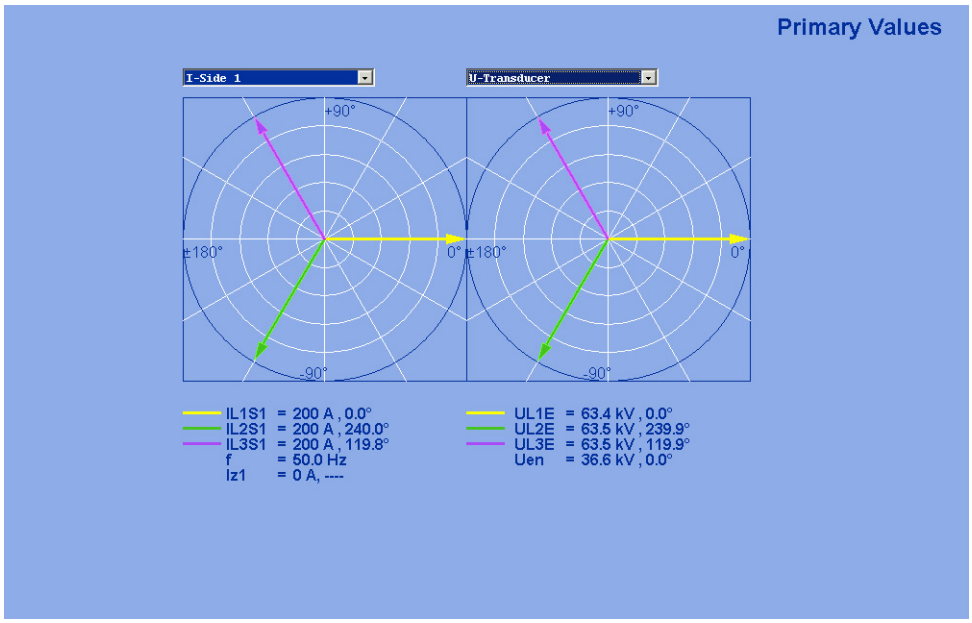

Figure 3-40 Phasor Diagram of the Primary Measured Values — Example

- Open the miniature circuit breaker of the feeder voltage transformers. The measured voltages in the operational measured values appear with a circuit close to zero (small measured voltages are of no consequence).
  - Check in the Event Log and in the spontaneous annunciations that the VT mcb trip was noticed (annunciation ">Fail:Feeder VT ON", No 361). Beforehand it has to be assured that the position of the VT mcb is connected to the device via a binary input.
- Close the VT mcb again: The above indications appear under the "going" operational indications, i.e. ">VT mcb OFF".
  - If one of the annunciations does not appear, the connection and allocation of these signals must be checked.
  - If the "ON" and "OFF" messages are exchanged, then the breaker auxiliary contact type (H-active or L-active) should be checked and corrected if necessary.
- Finally, the protected object or the voltage measuring location is switched off.

Allocation and Direction Test

Voltages are also used for calculation of powers and metering of energy. Therefore, it must be checked whether the connected voltages have correct relationship with respect to the currents which are to be used for power calculation. When using power protection functions (reverse power protection, forward power supervision) the correct allocation and polarity are prerequisite for the correct function of this protective function.

Primary tests are preferred as secondary tests cannot prove the correct polarity.

A load current of at least 5 % of the rated operational current is required. Any direction is possible but must be known.

- In a first step, check whether power measurement is carried out at the desired measuring location, i.e. that the assignment of the 3-phase voltage transformer set is made correct. The powers are always calculated from the connected voltages and the currents of that measuring location to which the voltages are assigned. If the voltage inputs are assigned to a side of the protected object with more than one measuring location, the sum of the currents flowing into the protected object is decisive.

  Address is relevant 261 **VT SET**. Refer to Subsection 2.1.4 under margin heading „Assignment of Voltage Measuring Inputs“.
- With closed circuit breaker, the power values can be viewed as primary and secondary measured values in the front display panel or via the operator or service interface with a personal computer.

  Here, again, the „Web-monitor“ is a comfortable help as the vector diagrams also show the correlation between the currents and voltages. Cyclically and acyclically swapped phases can easily be detected (see figure 3-41).
- With the aid of the measured power values you are able to verify that they correlate to the load direction, reading either at the device itself or in DIGSI

  P positive, if active power flows into the protected object,

  P negative, if active power leaves the protected object,

  Q positive, if (inductive) reactive power flows into the protected object,

  Q negative, if (inductive) reactive power leaves the protected object.

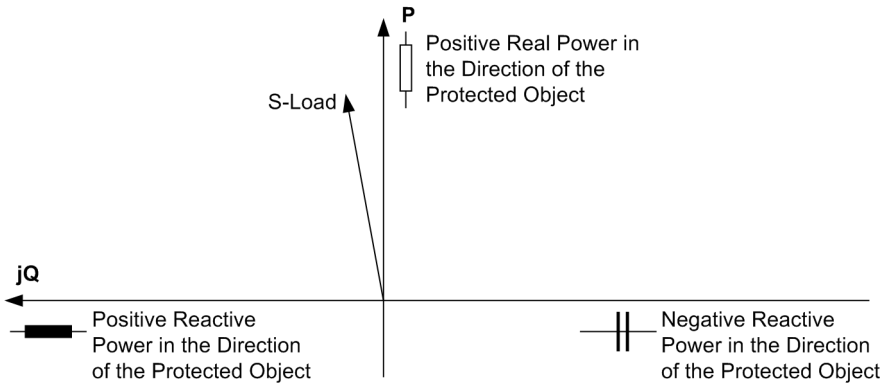

Figure 3-41 Apparent power

If all signs are inverted this may be intentional. Check in the setting of address 1107 **P,Q sign** in the power system data 2 whether the polarity is inverted (see also Subsection 2.1.6.1 under „Sign of Power“). In that case the signs for active and reactive power are inverse as well.

Otherwise, swapped polarities of the voltage connections may be the cause. If wrong sign is indicated in spite of correct VT connections, all CT polarities must be wrong!

If the voltage inputs are assigned to a side with more than one current measuring location, currents may flow through the measuring locations without entering the protective object because they cancel each other out. Power measurement is not possible in this case. Make sure that the currents for power measurement flow really through the protected object. Preferably use only one measuring location for the power test.

Finally, disconnect the power plant.

Angle Error Correction

During power calculations errors may occur due to angle errors in the current and voltage transformers. In most cases, these errors are of minor importance, i.e. when referring mainly to the power direction in network applications, e.g. during network coupling or load shedding.

Errors may not be ignored during the determination of active and reactive power or electrical active and reactive energy. Especially where reverse power protection with highly accurate active power measurement is used, a correction of the angle error of the involved current and voltage transformer is inevitable. Here (in case of low cos φ), a very low active power must be calculated from a large apparent power. In case of 7UT613/63x the angle errors are corrected in the voltage paths.

In case of generators, a precise determination of the angle errors is carried out during primary commissioning of the engine by means of the motoring power. Hence, deviations are determined taking three measuring points into consideration, if possible, from which the correction value φ_{corr} is derived. It is not important in which dimensions the following measured values are read, as reference or as absolute values, primary or secondary. All measured values must of course be converted into one dimension. The angle errors caused by the device internal input transformers have already been compensated in the factory.

- Start up generator and synchronize with network. During exact synchronous working, active and reactive power are theoretically zero.
- Reduce driving power to zero by closing the regulating valves. The generator now takes motoring energy from the network.

Caution!

For a turbine set, the intake of reverse power is only permissible for a short time, since operation of the turbine without a certain throughput of steam (cooling effect) can lead to overheating of the turbine blades!

- Adjust excitation until the reactive power amounts to approximately Q = 0. To check this, read the active and reactive power including sign (negative) in the operational measured values and note it down as P_0 (see table below). Read the reactive power with sign in the operational measured values and note it down as Q_0 (see table below).
- Slowly increase excitation to 30 % of rated apparent power of generator (overexcited).
  - Read the motoring power P_1 with polarity (negative sign) in the operational measured values under and write it down (see figure below).
  - Read out the reactive power Q_1 with polarity (positive sign) and write it down (see table in the figure below).
- If possible reduce excitation to approximately 0.3 times rated apparent power of generator (underexcited).

Caution!

Under-excitation may cause the generator fall out of step!

- Read the motoring power P_2 with polarity (negative sign) in the operational measured values under and write it down (see table 3-29).
  - Read the reactive power Q_2 with polarity (negative sign) in the operational measured values and write it down (see table 3-29).
- Adjust generator to no-load excitation and shut down if applicable (if not, follow the next margin heading).

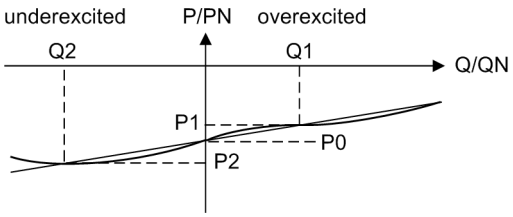

Figure 3-42 Determination of the correction angle φ_{corr}

Table 3-29 Motoring and reactive power for angle correction of the transformer error

State	Motoring Energy	Reactive Power
1	P_0	Q_0
2	P_1	Q_1
3	P_2	Q_2

The read-out measured values P1 and P2 are now used to carry out CT angle error correction: First calculate a correction angle from the measured value pairs according to the following formula:

$$\varphi_{corr} = \text{arc tan}\left(\frac{P_1 - P_2}{Q_1 - Q_2}\right)$$

The power values must be inserted with their correct polarity as read out! Otherwise faulty result!

This angle φ_{corr} is entered with reversed sign as the new correction angle under address 803 **CORRECT. U Ang**:

Setting Value **CORRECT. U Ang** = – φ_{corr}

Reverse Power Protection Setting for Generator

If an exact reverse power protection is used on a generator, you can now calculate the optimum setting value. If a generator is connected with the network, reverse power can be caused by

- closing of the regulating valves,
- closing of the stop valve

For the first case, the motoring power has already been determined from the prescribed measurements. As the pickup value of the reverse power protection corresponds to approximately half the motoring power, set the pickup value of the reverse power protection **P> REVERSE** in address 5011 (in Watt) or 5012 (referred to the nominal current of the generator) to a quarter of the sum of the read-out measured values P_1 and P_2 – also with negative sign –.

Because of possible leakages in the valves, the reverse power test should be performed with emergency tripping.

- Start up generator and synchronise with network, if not yet done.
- Close stop valve.
- From the operational measured value for the active power, the motoring power measured with the protection device can be derived.
- If that value should be found to be unexpectedly less than the reverse power with the stop valves closed, 50% of that value should be taken as the setting for the reverse power protection.
- Re-open stop valve.
- Shut down the generator.

3.3.13 Testing User-defined Functions

The device has a vast capability for allowing functions to be defined by the user, especially with the CFC logic. Any special function or logic added to the device must be checked.

A general procedure cannot in the nature of things be specified. Configuration of these functions and the set value conditions must be actually known beforehand and tested. Especially, possible interlocking conditions of the switching devices (circuit breakers, isolators, grounding electrodes) must be observed and checked.

3.3.14 Stability Check and Triggering Oscillographic Recordings

In order to be able to test the stability of the protection during switchon procedures also, switchon trials can also be carried out at the end. Oscillographic records obtain the maximum information about the behaviour of the protection.

Prerequisite

Along with the capability of storing fault recordings via pickup of the protection function, the 7UT613/63x also has the capability of capturing the same data when commands are given to the device via the service program DIGSI, the serial interface, or a binary input. For the latter, event „`>Trig.Wave.Cap.`“ must be allocated to a binary input. Triggering of the recording then occurs, for example, via the binary input when the protection object is energized.

An oscillographic recording that is externally triggered (that is, without a protective element pickup or device trip) is processed by the device as a normal oscillographic recording, and has a number for establishing a sequence. However, these recordings are not displayed in the fault indication buffer, as they are not fault events.

Start Test Measurement Recording

To trigger test measurement recording with DIGSI, click on **Test** in the left part of the window. Double click in the list view the **Test fault recording** entry (see Figure 3-43).

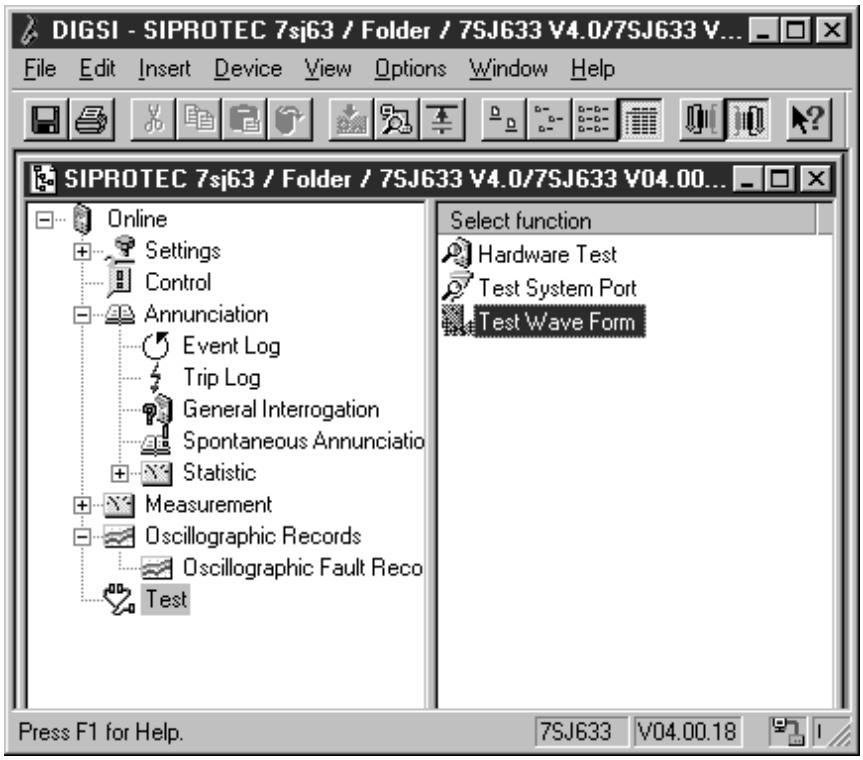

Figure 3-43 Triggering oscillographic recording with DIGSI — example

Oscillographic recording is immediately started. During the recording, an annunciation is output in the left area of the status line. Bar segments additionally indicate the progress of the procedure.

The SIGRA or the Comtrade Viewer program is required to view and analyse the oscillographic data.

Such test records are especially informative on power transformers when they are triggered by the switch-on command of the transformer. Since the inrush current may have the same effect as a single-ended infeed, but which may not initiate tripping, the effectiveness of the inrush restraint is checked by energising the power transformer several times.

The trip circuit should be interrupted or the differential protection should be switched to **DIFF. PROT.** = ***Block relay*** (address 1201) during these tests in order to avoid tripping.

Conclusions as to the effectiveness of the inrush restraint can be drawn from the recording of the differential currents and the harmonic contents. If necessary the inrush current restraint effect can be increased (= smaller value of the 2nd harmonic in address 1271 **2. HARMONIC**) when trip occurs or when the recorded data show that the second harmonic content does not safely exceed the restraining threshold (address 1271). A further method to increase inrush restraint is to set the crossblock function effective or to increase the duration of the crossblock function (address 1272 **CROSSB. 2. HARM**) (For further details refer to the setting information for differential protection under „Harmonic Restraint“).



Note

Do not forget to switch **on** the differential protection (address 1201) after completion of the test.

3.4 Final Preparation of the Device

The used terminal screws must be tightened, including those that are not used. All the plug connectors must be correctly inserted.



Caution!

Do not use force!

The permissible tightening torque must not be exceeded as the threads and terminal chambers may otherwise be damaged!

The setting values should be checked again, if they were changed during the tests. Check in particular whether all protection, control and auxiliary functions to be found with the configuration parameters are set correctly (Section 2.1.3, Functional Scope) and that all desired elements and functions have been set ***ON***. Keep a copy of all of the in-service settings on a PC.

The user should check the device-internal clock and set/synchronize it if necessary, provided that it is not synchronised automatically. For further information refer to SIPROTEC 4 System Description /1/.

The indication buffers are deleted under **Main Menu** → **Annunciation** → ***Set*** / ***Reset***, so that in the future they only contain information on actual events and states. The numbers in the switching statistics should be reset to the values that were existing prior to the testing.

The counters of the operational measured values (e.g. operation counter, if available) are reset under **Main Menu** → **Measurement** → ***Reset***.

Press the ESC key, several times if necessary, to return to the default display. The basic window appears in the display (e.g. display of operation measured values).

Clear the LEDs on the front panel by pressing the LED key, so that they only show real events and states. In so doing, possibly stored output relays will also be reset. Pressing the LED key also serves as a test for the LEDs on the front panel because they should all light up when the button is pressed. Any LEDs that are lit after the clearing attempt are displaying actual conditions.

The green „RUN“ LED must light up, whereas the red „ERROR“ must not light up.

If a test switch is available, it must be in the operating position.

The device is now ready for operation.

■

Technical Data

4

This chapter provides the technical data of SIPROTEC 4 devices 7UT613, 7UT633, 7UT633 and their individual functions, including the limiting values that must not be exceeded under any circumstances. The electrical and functional data for devices equipped with all options are followed by the mechanical data with dimensional drawings.

4.1	General	422
4.2	Differential Protection	435
4.3	Restricted earth fault protection	441
4.4	Time Overcurrent Protection for Phase and Residual Currents	442
4.5	Time Overcurrent Protection for Earth Current (Starpoint Current)	453
4.6	Dynamic Cold Load Pickup for Time Overcurrent Protection	455
4.7	Single-Phase Time Overcurrent Protection	456
4.8	Unbalanced Load Protection	457
4.9	Thermal Overload	465
4.10	RTD Boxes for Overload Detection	468
4.11	Overload Protection	469
4.12	Reverse Power Protection	471
4.13	Forward active power supervision	472
4.14	Undervoltage Protection	474
4.15	Overvoltage Protection (ANSI 59)	475
4.16	Frequency Protection	476
4.17	Circuit Breaker Failure Protection	478
4.18	External Trip Commands	479
4.19	Monitoring Functions	480
4.20	User-defined Functions (CFC)	481
4.21	Flexible Protection Functions	485
4.22	Additional Functions	487
4.23	Dimensions	491

4.1 General

4.1.1 Analogue Inputs

Voltage Inputs

Rated frequency	f_N	50 Hz / 60 Hz / 16.7 Hz (adjustable)
Nominal current	I_{Nom}	1 A or 5 A or 0.1 A (changeable)
Power consumption per input		
– at I_N = 1 A		Approx. 0.05 VA
– at I_N = 5 A		Approx. 0.3 VA
– at I_N = 0.1 A		Approx. 1 mVA
– for high-sensitivity input at 1 A		Approx. 0.05 VA
Current overload capability per input		
– thermal (rms)		100 I_N for 1 s 30 I_N for 10 s 4 I_N continuous
– dynamic (pulse current)		250 I_N (half-cycle)
Current overload capability for high-sensitivity input		
– thermal (rms)		300 A for 1 s
		100 A for 10 s
		15 A continuous
– dynamic (pulse current)		750 A (half-cycle)

Voltage Inputs

Secondary Nominal Voltage		80 V to 125 V
Measuring Range		0 V to 200 V
Power Consumption	At 100 V	Approx. 0.3 VA
Voltage path overload capacity		
- thermal (RMS)		230 V continuous

4.1.2 Auxiliary Voltage

Direct Voltage

Voltage supply through integrated converter	
Rated auxiliary voltage U_H—	24/48 VDC
Permissible voltage range	19 to 58 VDC
Rated auxiliary voltage U_H—	60 /110/ 125 V—
Permissible voltage range	48 to 150 V—
Rated auxiliary voltage U_H—	110/125/220/250 V—
Permissible voltage range	88 to 300 V—

Admissible AC ripple voltage, Peak to peak, IEC 60255-11	≤15 % of the auxiliary voltage
Power consumption, quiescent	Approx. 6 W
Power consumption, energized 7UT613 7UT633/7UT635	 Approx. 12 W Approx. 20 W
Bridging time for failure/short-circuit of the power supply, IEC 60255-11	≥ 50 ms at U_H = 48 V and U_H ≥ 110 V
	≥ 20 ms at U_H = 24 V and U_H = 60 V

Alternating Voltage

Voltage supply through integrated converter	
Rated auxiliary voltage $U_{H\sim}$	115 / 230 VAC
Permissible voltage range	92 to 265 VAC
Power consumption, quiescent	approx. 12 VA
Power consumption, energized 7UT613 7UT633/7UT635	 Approx. 19 VA Approx. 28 VA
Bridging time for failure/short-circuit of the power supply	≥ 50 ms

4.1.3 Binary Inputs and Outputs

Binary Inputs

Device 7UT613 7UT633 7UT635	Number 5 (allocatable) 21 (allocatable) 29 (allocatable)	
Rated Voltage	24 to 250 VDC in 2 ranges, bipolar	
Current consumption, picked up (independent of the operating voltage)	approx. 1.8 mA per binary input	
Switching thresholds	Adjustable with jumpers	
For rated voltages	24/48 VDC 60/110/125 VDC	U_{high} ≥ 19 V– U_{low} ≤ 14 V–
For rated voltages	110/125/220/250 VDC	U_{high} ≥ 88 V– U_{low} ≤ 66 V–
for nominal voltages	220/250 VDC	U_{high} ≥ 176 V– U_{low} ≤ 132 V–
Maximum permissible voltage	300 VDC	
Input interference suppression	220 nF coupling capacitance at 220 V with recovery time > 60 ms	

Output Relay

Signalling/Trip Relays [1])	
Device	Number
7UT613	8 (allocatable)
7UT633	24 (allocatable)
7UT635	24 (allocatable)

Switching capability MAKE	1000 W/VA
Switching capability BREAK	30 VA 40 W resistive 25 W at L/R ≤ 50 ms
Alarm relay	1 with 1 NO contact or 1 NC contact (selectable)
Switching capability MAKE	1000 W/VA
Switching capability BREAK	30 VA 40 W resistive 25 W at L/R ≤ 50 ms
Switching voltage	250 V
Permissible current per contact	5 A continuous 30 A for 0.5 s (NO contact)
Permissible total current on common paths	5 A continuous 30 A for 0.5 s (NO contact)
Pick-up times	
Make contact high-speed	5 ms
Changeover contact	8 ms
High speed (only make contact) [2])	<1 ms
[2]) for order option 7UT633, 7UT635	

[1]) UL-listed with the following rated data:		
	120 VAC	Pilot duty, B300
	240 VAC	Pilot duty, B300
	240 VAC	5 A General Purpose
	24 VDC	5 A General Purpose
	48 VDC	0.8 A General Purpose
	240 VDC	0.1 A General Purpose
	120 VAC	1/6 hp (4.4 FLA)
	240 VAC	1/2 hp (4.9 FLA)

4.1.4 Frequency Measurement via the Positive Phase-sequence Voltage U1

Frequency Range for Rated Frequency 50/60 Hz

Lower frequency limit	9.25 Hz
Upper frequency limit	70 Hz

Frequency Range for Rated Frequency 16.7 Hz

Lower frequency limit	9.25 Hz
Upper frequency limit	23.33 Hz

Minimum voltage U1 secondary	5V
The specifications also apply to frequency measuring levels that are realised by the flexible protection functions.	

4.1.5 Communications Interfaces

Operator Interface

Connection	Front side, non-isolated, RS232, 9-pin D-subminiature female connector for connection of a PC computers
Operation	With DIGSI
Transmission speed	min. 4,800 Baud; max. 115,200 Baud; factory setting: 115,200 Baud; parity: 8E1
Maximum bridgeable distance	15 m

Service/Modem Interface

RS232 RS485 FOC acc. to ordered version	isolated interface for data transfer for operation using DIGSI or for connection of a RTD box	
RS232	Connection for flush-mounted housing	rear panel, mounting location „C“, 9-pole DSUB port shielded data cable
	Connector for surface mounted housing	in inclined housing on the case bottom; shielded data cable
	Test Voltage	500 V; 50 Hz
	Transmission speed	min. 4 800 Bd, max. 115 200 Bd; Factory 38 400 Baud
	Maximum bridgeable distance	15 m
RS485	Connection for flush-mounted housing	rear panel, mounting location „C“, 9-pole DSUB port shielded data cable
	Connector for surface mounted housing	in inclined housing on the case bottom; shielded data cable
	Test Voltage	500 V; 50 Hz
	Transmission speed	min. 4 800 Baud; max. 115 200 Baud; Factory 38 400 Baud
	Maximum bridgeable distance	1,000 m

Fibre optic cable (FO)	FOC connector type	ST connector
	Connection for flush-mounted housing	rear panel, mounting location „C“
	Connector for surface mounted housing	in the inclined housing on the case bottom
	optical wavelength	λ = 820 nm
	Laser class 1 according to EN 60825-1/-2	Using glass fibre 50/125 μm or using glass fibre 62.5/125 μm
	^Permissible optical signal attenuation	Max. 8 dB, with glass fibre 62.5/125 μm
	Maximum transmission distance	max. 1.5 km (0.94 miles)
	Character Idle State	Configurable; factory setting „Light off“

System Interface (optional)

IEC 60870-5-103 RS232 RS485 FOC Profibus RS485 Profibus FOC acc. to ordered version	Isolated interface for data transfer to a master terminal	
	IEC 60870-5-103 different isolated-neutral versions available	
RS232 rear panel, mounting location „B“, 9-pole DSUB miniature socket	Connection for flush-mounted housing	
	Connection for surface mounted case	in the inclined housing on the case bottom
	Test voltage	500 V; 50 Hz
	Transmission speed	min. 300 Bd, max. 57,600 Bd factory setting 9,600 Bd
	Maximum bridgeable distance	15 m (50 ft)
RS485 rear panel, mounting location „B“, 9-pole DSUB miniature socket	Connection for flush-mounted housing	
	Connection for surface mounted case	in the inclined housing on the case bottom
	Test voltage	500 V; 50 Hz
	Transmission speed	min.300 Bd, max. 57,600 Bd factory setting 9,600 Bd
	Maximum bridgeable distance	1 km

Optical fibre (FO) ST connector	FOC connector type	
	Connection for flush mounted case	Rear panel, mounting location „B“
	Connection for surface mounted case	in the inclined housing on the case bottom
	Optical wavelength	λ = 820 nm
	Laser class 1 according to EN 60825-1/-2	Using glass fibre 50/12 μm or using glass fibre 62.5/125 μm
	Permissible optical signal attenuation	max. 8 dB using glass fibre 62.5/125 μm
	Maximum bridgeable distance	1.5 km
	Character idle state	Selectable: factory setting „Light off“
PROFIBUS RS485 (FMS and DP) rear panel, mounting location „B“, 9-pole DSUB miniature socket	Connection for flush-mounted housing	
	Connection for surface mounted case	in the inclined housing on the case bottom
	Test voltage	500 V; 50 Hz
	Transmission speed	up to 1.5 MBd
	Maximum bridgeable distance	1,000 m (3300 ft) at ≤ 93.75 kBd 500 m (1640 ft) at ≤ 187.5 kBd 200 m (660 ft) at ≤ 1.5 MBd
PROFIBUS FOC (FMS and DP) ST connector with FMS: Single or double ring according to order; with DP: only double ring available	FOC connector type	
	Connection for flush mounted case	only with external OLM; rear panel, mounting location „B“
	Connection for surface mounted case	only with external OLM; in the inclined housing on the case bottom
	Transmission speed — recommended:	up to 1.5 MBd > 500 kBd
	Optical wavelength	λ = 820 nm
	Laser class 1 acc. to EN 60825-1/-2	Using glass fibre 50/125 μm or using glass fibre 62.5/125 μm
	Permissible optical signal attenuation	max. 8 dB, with glass fibre 62.5/125 μm
	maximum bridgeable distance between two modules at redundant optical ring topology and optical fibre 62.5/125 m	approx. 1.6 km (1750 ft) at 500 kbit/s approx. 530 m (1750 ft) at 1500 kbit/s
DNP3.0 RS485 rear panel, mounting location „B“, 9-pole DSUB miniature socket	Connection for flush-mounted housing	
	Connection for surface mounted case	in the inclined housing on the case bottom
	Test voltage	500 V; 50 Hz
	Transmission speed	up to 19,200 Baud
	Maximum bridgeable distance	1 km

DNP3.0 Fibre Optical Link ST–connector transmitter/receiver	FOC connector type	
	Connection for flush mounted case	rear panel, mounting location „B“
	Connection for surface-mounted case	only with external converter; in the inclined housing on the case bottom
	Transmission speed	up to 19,200 Baud
	Optical wavelength	λ = 820 nm
	Laser class 1 acc. to EN 60825-1/-2	Using glass fibre 50/125 μm or using glass fibre 62.5/125 μm
	Permissible optical signal attenuation	max. 8 dB using glass fibre 62.5/125 μm
	Maximum bridgeable distance	1.5 km
MODBUS RS485 rear panel, mounting location „B“ 9-pole DSUB miniature socket	Connection for flush-mounted housing	
	Connector for surface mounted housing	in the inclined housing on the case bottom
	Test Voltage	500 V; 50 Hz
	Transmission speed	Up to 19 200 Baud
	Maximum bridgeable distance	1 km
MODBUS FO ST–connector transmitter/receiver	FOC connector type	
	Connection for flush-mounted housing	Rear panel, mounting location „B“
	Connector for surface mounted housing	only with external converter; in the inclined housing on the case bottom
	Transmission speed	Up to 19 200 Baud
	optical wavelength	λ = 820 nm
	Laser class 1 according to EN 60825-1/-2	Using glass fibre 50/125 μm or using glass fibre 62.5/125 μm
	Permissible optical signal attenuation	Max. 8 dB, with glass fibre 62.5/125 μm
	Maximum bridgeable distance	1.5 km
Ethernet electrical (EN100) for IEC 61850 and DIGSI	Connection for flush-mounted housing	rear panel, mounting location "B" 2 x RJ45 female connector 100BaseT acc. to IEEE802.3
	for surface-mounting case	in the inclined housing on the case bottom
	Test voltage (regarding connector)	500 V; 50 Hz
	Transmission speed	100 MBit/s
	bridgeable distance	20 m

Ethernet optical (EN 100) for IEC 61850 and DIGSI	FOC connector type	ST–connector transmitter/receiver
	Connection for flush-mounted housing	Rear panel, mounting location "B"
	for surface-mounting case	not available
	optical wavelength	λ = 1350 nm
	Transmission speed	100 MBit/s
	Laser class 1 according to EN 60825-1/-2	Using glass fibre 50/125 μm or using glass fibre 62.5/125 μm
	permissible optical signal attenuation	max. 5 dB, with glass fibre 62.5/125 μm
	bridgeable distance	max. 800 m (0.94 miles)

Additional Interface (optional)

RS485 FOC acc. to ordered version	isolated interface for connection of an RTD-box	
RS485	Connection for flush mounted case	Rear panel, mounting location „C“, 9-pole DSUB port
	Connection for surface mounted case	in the inclined housing on the case bottom
	Test voltage	500 V; 50 Hz
	Transmission speed	9,600 Bd
	Maximum bridgeable distance	1,000 m (3300 ft)
Optical fibre (FO)	FO connector type	ST connector
	Connection for flush mounted case	Rear panel, mounting location „B“
	Connection for surface mounted case	in the inclined housing on the case bottom
	Optical wavelength	λ = 820 nm
	Laser class 1 according to EN 60825-1/-2	Using glass fibre 50/125 μm or using glass fibre 62.5/125 μm
	Permissible optical signal attenuation	max. 8 dB using glass fibre 62.5/125 μm
	Maximum bridgeable distance	1,500 m
	Character idle state	Selectable: factory setting „Light off“

Time Synchronisation Interface

Time Synchronisation	DCF 77 / IRIG B Signal (telegram format IRIG-B000)
Connection for flush-mounted housing	Rear panel, mounting location „A“; 9-pin DSUB port
for surface-mounting case	at two-tier terminals on the case bottom

Rated signal voltages		selectable 5 V, 12 V or 24 V	
Test voltage		500 V; 50 Hz	
Signal levels and burdens for DCF 77 and IRIG B (format IRIG-B000)			
	Rated signal input voltage		
	5 V	12 V	24 V
U_{IHigh}	6.0 V	15.8 V	31 V
U_{ILow}	1,0 V at I_{ILow} = 0,25 mA	1.4 V at I_{ILow} = 0,25 mA	1.9 V at I_{ILow} = 0,25 mA
I_{IHigh}	4.5 mA to 9.4 mA	4.5 mA to 9.3 mA	4.5 mA to 8.7 mA
R_I	890 Ω at U_I = 4 V	1930 Ω at U_I = 8.7 V	3780 Ω at U_I = 17 V
	640 Ω at U_I = 6 V	1700 Ω at U_I = 15.8 V	3560 Ω at U_I = 31 V

4.1.6 Electrical Tests

Regulations

Standards:	IEC 60255 (product standards) IEEE C37.90.0; C37.90.1 UL 508 VDE 0435 See also standards for individual tests

Isolation Test

Standards:	IEC 60255-5 and IEC 60870-2-1
High voltage test (routine test) all circuits except power supply, binary inputs, and communication / time sync. interfaces	2.5 kV (rms), 50 Hz
High voltage test (routine test) auxiliary voltage and binary inputs	3.5 kV—
High voltage test (routine test) only isolated communication and time synchronisation interfaces and time synchronisation interfaces	500 V (rms), 50 Hz
Impulse voltage test (type test) all circuits except communications / time sync. interfaces, class III	5 kV (peak), 1.2/50 μs, 0.5 J, 3 positive and 3 negative impulses in intervals of 5 s

EMC Tests for the Interference Immunity (type test)

Standards:	IEC 60255-6 and -22 (product standards) EN 61000-6-2 (generic standard) VDE 0435 part 301DIN VDE 0435-110
High frequency test IEC 60255-22-1, Class III and VDE 0435 part 303, Class III	2.5 kV (peak); 1 MHz; τ = 15 μs; 400 surges per s; test duration 2 s; R_i = 200 Ω
Electrostatic discharge IEC 60255-22-2, Class IV and IEC 61000-4-2, Class IV	8 kV contact discharge; 15 kV air discharge; both polarities; 150 pF; R_i = 330 Ω

Irradiation with HF field, frequency sweep IEC 60255-22-3; Class III IEC 61000-4-3, Class III	10 V/m; 80 MHz to 1000 MHz; 10 V/m; 800 MHz to 960 MHz; 20 V/m; 1.4 GHz to 2.0 GHz; 80 % AM; 1 kHz
Irradiation with HF field, single frequencies IEC 60255-22-3; IEC 61000-4-3 – amplitude modulated – pulse modulated	Class III: 10 V/m 80/160/450/900 MHz; 80 % AM; duty cycle >10 s 900 MHz; 50 % PM, repetition frequency 200 Hz
Fast transient disturbance/burst IEC 60255-22-4 and IEC 61000-4-4, Class IV	4 kV; 5/50 ns; 5 kHz; burst length = 15 ms; repetition rate 300 ms; both polarities; R_i = 50 Ω; test duration 1 min
High energy surge voltages (SURGE), IEC 61000-4-5 Installation Class 3 —auxiliary voltage Measuring inputs, binary inputs and relay outputs	impulse: 1.2/50 μ common mode: 2 kV; 12 Ω; 9 μF Diff. mode:1 kV; 2 Ω; 18 μF common mode: 2 kV; 42Ω; 0. 5 μF diff. mode: 1 kV; 42Ω; 0. 5 μF
Line conducted HF, amplitude modulated IEC 61000-4-6, Class III	10 V; 150 kHz to 80 MHz: 80 % AM; 1 kHz
Power system frequency magnetic field IEC 61000-4-8, Class IV IEC 60255-6	30 A/m continuous; 300 A/m for 3 s; 50 Hz 0.5 mT; 50 Hz
Oscillatory surge withstand capability IEEE Std C37.90.1	2.5 kV (peak value); 1 MHz; τ = 15 μs; 400 pulses per s; test duration 2 s; R_i = 200 Ω
Fast transient surge withstand cap. IEEE Std C37.90.1	4 kV; 5/50 ns; 5 kHz; burst length = 15 ms; Repetition rate 300 ms; both polarities; R_i = 50 Ω; test duration 1 min
Damped oscillations IEC 60694, IEC 61000-4-12	2.5 kV (peak value), polarity alternating 100 kHz, 1 MHz, 10 MHz and 50 MHz; R_i = 200 Ω

EMC Tests for the Interference Emission (type test)

Standard:	EN 61000-* (generic standard)
Conducted interference, only power supply voltage IEC-CISPR 22	150 kHz to 30 MH limit class B
Radio interference field strength IEC-CISPR 22	30 MHz to 1000 MHz Limit class B
Harmonic currents on the network lead at 230 V AC IEC 61000-3-2	Class A limits are observed
Voltage fluctuations and flicker on the network lead at 230 VAC IEC 61000-3-3	Limits are observed

4.1.7 Mechanical Tests

Vibration and shock during operation

Standards:	IEC 60255-21 and IEC 60068
Oscillation IEC 60255-21-1, Class 2; IEC 60068-2-6	sinusoidal 10 Hz to 60 Hz: ± 0.075 mm amplitude; 60 Hz to 150 Hz: 1 g acceleration frequency sweep rate 1 octave/min 20 cycles in 3 orthogonal axes
Shock IEC 60255-21-2, Class 1 IEC 60068-2-27	Half-sine shaped Acceleration 5 g, duration 11 ms, 3 shocks in each direction of 3 orthogonal axes
Seismic Vibration IEC 60255-21-3, Class 1 IEC 60068-3-3	sinusoidal 1 Hz to 8 Hz: ± 3,5 mm amplitude (horizontal axis) 1 Hz to 8 Hz: ± 1,5 mm amplitude (vertical axis) 8 Hz to 35 Hz: 1 g acceleration (horizontal axis) 8 Hz to 35 Hz: 0,5 g acceleration (vertical axis) frequency sweep rate 1 octave/min 1 cycle in 3 orthogonal axes

Vibration and Shock during Transport

Standards:	IEC 60255-21 and IEC 60068
Oscillation IEC 60255-21-1, Class 2; IEC 60068-2-6	sinusoidal 5 Hz to 8 Hz: ± 7.5 mm amplitude; 8 Hz to 150 Hz: 2 g acceleration frequency sweep rate 1 octave/min 20 cycles in 3 orthogonal axes
Shock IEC 60255-21-2, Class 1 IEC 60068-2-27	Half-sine shaped Acceleration 15 g, duration 11 ms, 3 shocks in each direction of 3 orthogonal axes
Continuous Shock IEC 60255-21-2, Class 1, IEC 60068-2-29	Half-sine shaped Acceleration 10 g, duration 16 ms, 1000 shocks in each direction of 3 orthogonal axes
Note: All stress test data apply for devices in factory packaging.	

4.1.8 Climatic Stress Test

Temperatures

Standards:	IEC 60255-6
Type tested (acc. IEC 60086-2-1 and -2, Test Bd, for 16 h)	–25 °C to +55 °C (–13 °F to 131 °F)

Limiting temporary (transient) operating temperature (tested for 96 h)	–20 °C to +70 °C (legibility of display may be restricted from +131 °F (+55 °C))
recommended permanent operating temperature (acc. to IEC 60255-6)	–5 °C to +55 °C or +23 °F to 131 °F
Limit temperatures for storage	–25 °C to +55 °C or –13 °F to +131 °F
Limit temperatures during transport	–25 °C to +70 °C or –13 °F to +158 °F
Storage and transport of the device with factory packaging!	

Humidity

Admissible humidity conditions	mean value per year ≤ 75 % relative humidity; on 56 days of the year up to 93 % relative humidity; condensation not permissible! Humidity; condensation not permissible!
All devices shall be installed such that they are not exposed to direct sunlight, nor subject to large fluctuations in temperature that may cause condensation to occur.	

4.1.9 Service Conditions

The device is designed for use in an industrial environment or an electrical utility environment, for installation in standard relay rooms and compartments so that proper installation and electromagnetic compatibility (EMC) is ensured.

In addition the following is recommended:

- All contacts and relays that operate in the same cubicle, cabinet, or relay panel as the numerical protective device should, as a rule, be equipped with suitable surge suppression components.
- For substations with operating voltages of 100 kV and above, all external cables should be shielded with a conductive shield earthed at both ends. The shield must be capable of carrying the fault currents that could occur.
- Do not withdraw or insert individual modules or boards while the protective device is energised. When handling the modules or the boards outside of the case, standards for components sensitive to electrostatic discharge (**E**lectrostatic **S**ensitive **D**evices) must be observed. There is no hazard where installed components are concerned.

4.1.10 Constructional Details

Housing	7XP20
Dimensions	see dimensional drawings in the technical data section
Weight (maximum number of components) approx.	
7UT613	
In surface-mounted housing, size $^1/_2$ In flush-mounted housing, size $^1/_2$	13.5 kg (29.8 lb) 8.7 kg (19.2 lb)
7UT633	
In surface-mounted housing, size $^1/_1$ In surface-mounted housing, size $^1/_1$ [1)] In flush-mounted housing, size $^1/_1$	22.0 kg (48.5 lb) 25.3 kg (55.8 lb) 13.8 kg (30.4 lb)
7UT635	
In surface-mounted housing, size $^1/_1$ In surface-mounted housing, size $^1/_1$ [1)] In flush-mounted housing, size $^1/_1$	22.7 kg (50 lb) 26.0 kg (57.3 lb) 14.5 kg (32 lb)
Degree of protection acc. to IEC 60529	
For the device in surface-mounted housing	IP 51
For the device in flush-mounted housing	
Front	IP 51
Back	IP 50
For human safety	IP 2x with closed protection cover
UL-certification conditions	Type 1 for front panel mounting Surrounding air temperatur: tsurr: max 70 °C, normal operation

[1)] With shipping brace

4.2 Differential Protection

Pickup Values

Differential current	$I_{Diff}>/I_{NObj}$	0.05 to 2.00	Steps 0.01
High-current stage	$I_{Diff}>>/I_{NObj}$	0.5 to 35.0 or ∞ (ineffective)	Steps 0.1
Increase of the pickup value when connecting as a factor of $I_{Diff}>$		1.0 to 2.0	Steps 0.1
Add-on restraint on external fault			
(I_{stab} > setting value) Action time	I_{Add-on}/I_{NObj}	2.00 to 15.00 2 to 250 cycles or ∞ (active until dropout)	Steps 0.01 Increments 1 cycle
Trip characteristic		see Figure 4-1	
Tolerances (with preset characteristic parameters, for 2 sides with 1 measuring location each)			
$I_{Diff}>$ stage and characteristic		5 % of set value	
$I_{Diff}>>$ stage		5 % of set value	

Time Delays

Delay of $I_{Diff}>$ stage	$T_{IDiff>}$	0.00 s to 60.00 s or ∞ (no trip)	Steps 0.01 s
Delay of $I_{Diff}>>$ stage	$T_{IDiff>>}$	0.00 s to 60.00 s or ∞ (no trip)	Steps 0.01 s
Time tolerance		1 % of set value or 10 ms	
The set times are pure delay times			

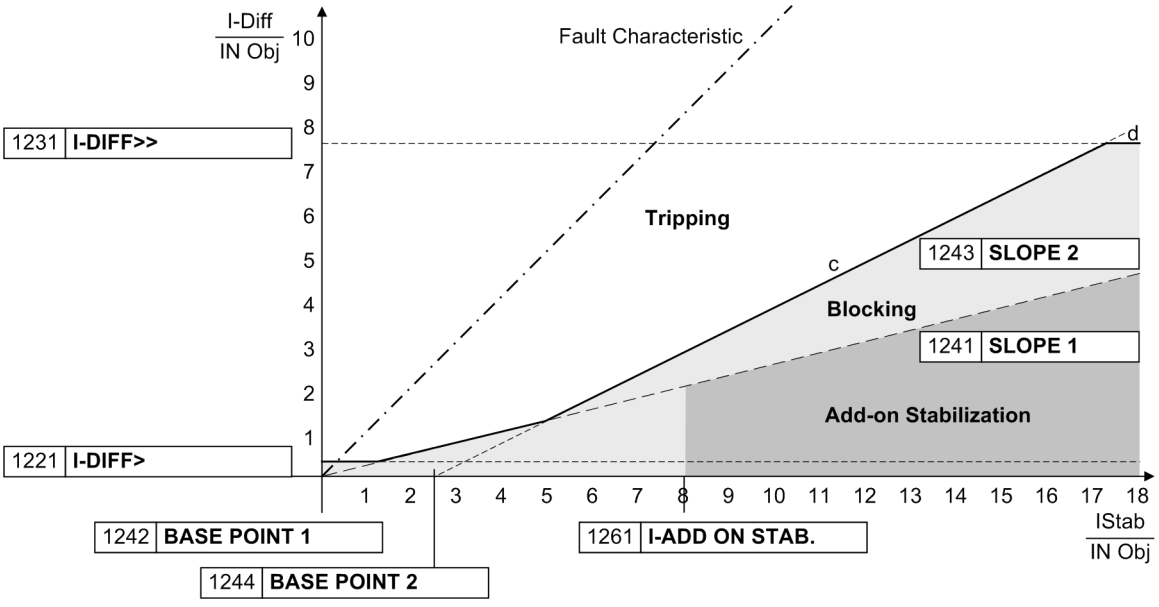

Figure 4-1 Tripping characteristic of the differential protection

I_{diff} differential current = $|I_1 + I_2|$

I_{rest} stabilising current = $|I_1| + |I_2|$

I_{NObj} Nominal current of protected object

Harmonic Restraint (Transformers)

Inrush restraint ratio (2nd harmonic) I_{2fN}/I_{fN}	10 % to 80 % see also Figure 4-24-2	Steps 1 %
Restraint ratio further (n-th) harmonic (either 3rd or 5th) I_{nfN}/I_{fN}	10 % to 80 % see also Figure 4-3	Steps 1 %
Crossblock function	can be activated / deactivated	
Max. action time for crossblock	2 to 1000 AC cycles or 0 (crossblock deactivated) or ∞ (active until dropout)	Steps 1 cycle

Operating Times (Transformers)

Pickup time / dropout time with single-side infeed				
Pickup time at frequency		50 Hz	60 Hz	16.7 Hz
I_{Diff}> min	high-speed relays	30 ms	27 ms	78 ms
	high-speed relays	25 ms	22 ms	73 ms
I_{Diff}>> min	high-speed relays	11 ms	11 ms	20 ms
	high-speed relays	6 ms	6 ms	15 ms
Dropout time, approx.		54 ms	46 ms	150 ms
Dropout ratio		approx. 0.7		

Conditioning for Transformers

Matching of vector group	0 to 11 (x 30°)	Steps 1
Starpoint conditioning	earthed or non-earthed (for each winding)	

Operating Range Frequency (Transformers)

Frequency influence within the frequency tagging range	see Figure

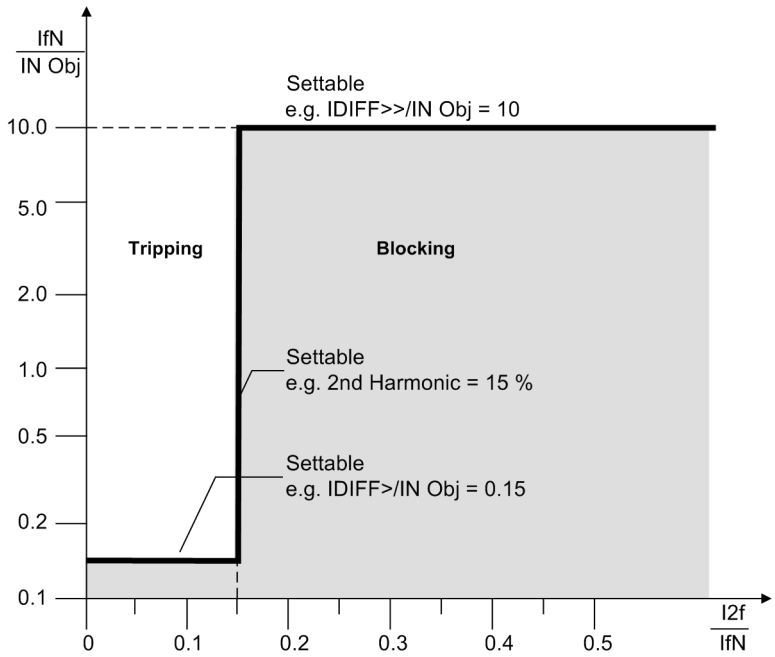

Figure 4-2 Restraining influence of 2nd harmonic in transformer differential protection

I_{diff} differential current = $|I_1 + I_2|$

I_{NObj} Rated current of protected object

I_{fN} Current at rated frequency

I_{2f} Current at double frequency

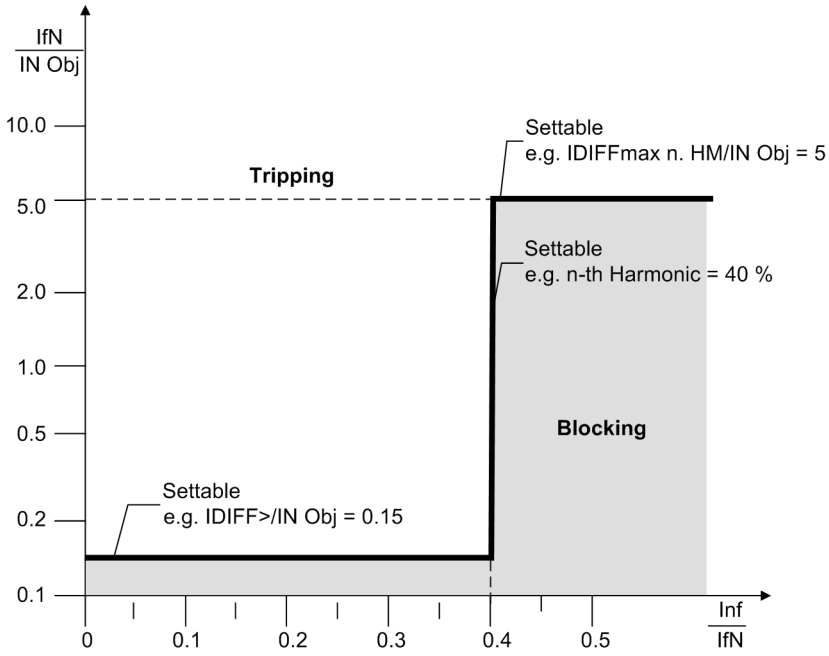

Figure 4-3 Restraining influence of n-th harmonic in transformer differential protection

I_{diff} differential current = $|I_1 + I_2|$

I_{NObj} Nominal current of protected object

I_{fN} Current at nominal frequency

I_{nf} Current at n times the frequency (n = 3 or 4)

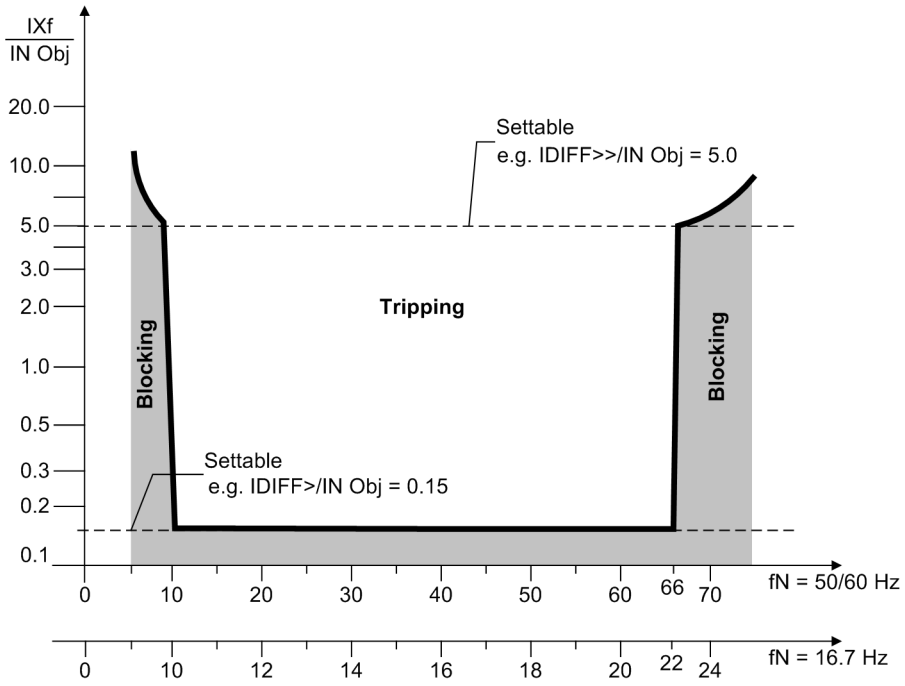

Figure 4-4 Frequency influence in transformer differential protection

I_{diff} Differential current = $|I_1 + I_2|$

I_{NObj} Nominal current of the protected object

I_{Xf} Current at any frequency within specified range

Operating Times (Generators, Motors, Reactors)

Pickup time / dropout time with single-side infeed				
Pickup time at frequency		50 Hz	60 Hz	16.7 Hz
I_{Diff}> min	high-speed relays	30 ms	27 ms	78 ms
	high-speed relays	25 ms	22 ms	73 ms
I_{Diff}>> min	high-speed relays	11 ms	11 ms	20 ms
	high-speed relays	6 ms	6 ms	15 ms
Dropout time, approx.		54 ms	46 ms	150 ms
Dropout ratio		approx. 0.7		

Operating Range Frequency (Generators, Motors, Reactors)

Frequency influence within the frequency tagging range	see Figure 4-5

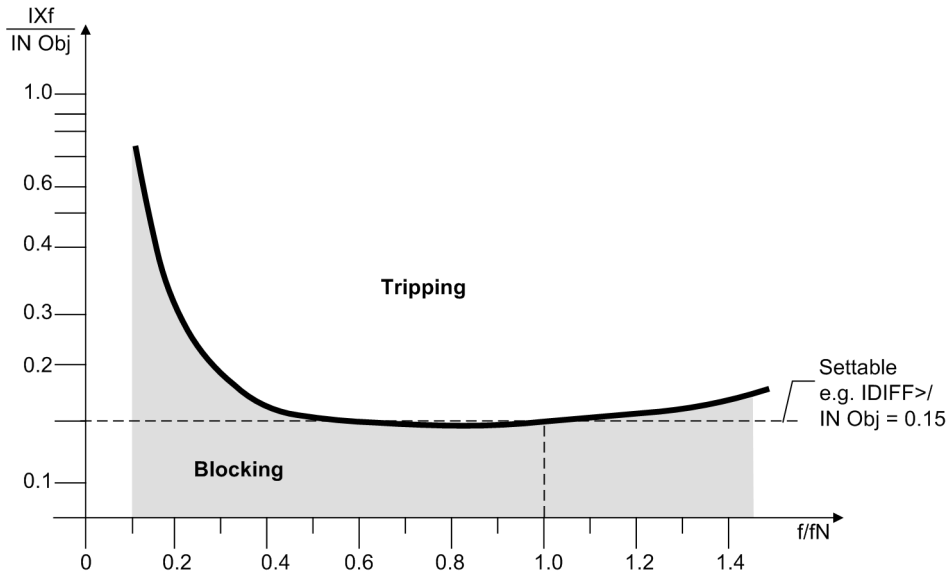

Figure 4-5 Frequency influence (generator / motor protection and busbar protection)

I_{diff} differential current = $|I_1 + I_2|$

I_{NObj} Nominal current of protected object

I_{Xf} Current at any frequency within specified range

Differential Current Monitor (Busbars, Short Lines)

Note: Higher tolerances must be expected if I_N = 0.1 A (device connected via summation current transformers). Also, the device tolerances do not include measuring errors originating from summation CTs and magnetizing currents.		
Steady-state differential current monitoring		
I_{Monit}/I_{NObj}	0.15 to 0.80	Steps 0.01

Delay of blocking of differential current		
T_{Monit}	1 s to 10 s	Steps 1 s

Feeder Current Guard (Busbars, Short Lines)

Trip release by feeder current guard	$I>_{Guard}/I_{NObj}$	0.20 to 2.00 or 0 (always released)	Steps 0.01

Operating Time (Busbars, Short Lines)

Pickup time / dropout time with single-side infeed				
Pickup time at frequency		50 Hz	60 Hz	16.7 Hz
$I_{Diff}>$ min	high-speed relays	11 ms	11 ms	18 ms
	high-speed relays	6 ms	6 ms	13 ms
$I_{Diff}>>$ min	high-speed relays	11 ms	11 ms	18 ms
	high-speed relays	6 ms	6 ms	13 ms
Dropout time, approx.		54 ms	46 ms	150 ms
Dropout ratio		approx. 0.7		

Operating Range Frequency (Busbars, Short Lines)

Frequency influence within the frequency tagging range	see Figure 4-5

4.3 Restricted earth fault protection

Setting Ranges

Differential current	$I_{REF}>/I_{NObj}$	0.05 to 2.00	Steps 0.01
Limit angle	φ_{REF}	110° (fixed)	
Trip characteristic		see Figure 4-6	
Pickup tolerance (with preset characteristic parameters and one 3-phase measuring location)		5 % at $I < 5 \cdot I_N$	
Time delay	T_{REF}	0.00 s to 60.00 s or ∞ (no trip)	Steps 0.01 s
Time tolerance		1 % of set value or 10 ms	
The set times are pure delay times			

Operating Time

Pickup time at frequency		50 Hz	60 Hz	16.7 Hz
at 1.5 · set value $I_{REF}>$ approx.	high-speed relays	35 ms	30 ms	110 ms
	high-speed relays	30 ms	25 ms	105 ms
at 2.5 · set value $I_{REF}>$ approx.	high-speed relays	33 ms	29 ms	87 ms
	high-speed relays	28 ms	24 ms	82 ms
Dropout time, approx.		26 ms	23 ms	51 ms
Dropout ratio		approx. 0.7		

Frequency Influence

Frequency influence	within the frequency tagging range

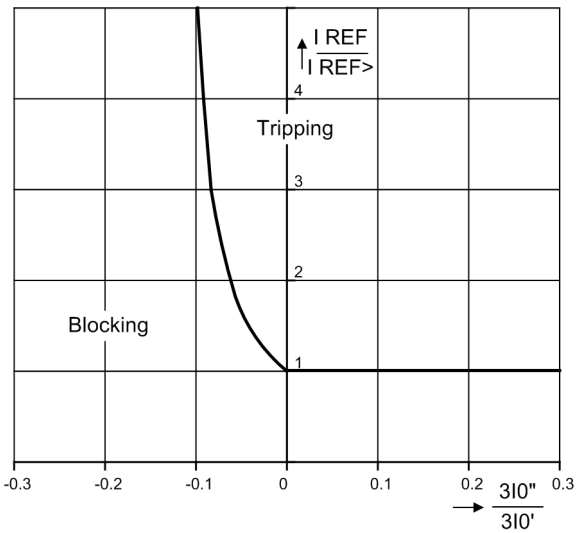

Figure 4-6 Tripping characteristic of the restricted earth fault protection depending on the earth current ratio $3I_0"/3I_0'$ (both currents in phase + or counter-phase —); $I_{REF}>$ = setting; I_{Trip} = tripping current

4.4 Time Overcurrent Protection for Phase and Residual Currents

Characteristics

Definite-time stages	DT	I_{Ph}>>, $3I_0$>>, I_{Ph}>, $3I_0$>
Inverse time stages (acc. to IEC or ANSI)	IT	I_P, $3I_{0P}$ one of the tripping curves depicted in figures to 4-12 on the right-hand side may be selected; alternatively user specified trip and reset characteristic
Reset characteristics (with disk emulation)	IT	For illustrations of possible reset time characteristics see figures to 4-12 on the left-hand side.

Current Stages

High current stages	I_{Ph}>>	0.10 A to 35.00 A[1)] or ∞ (ineffective)	Steps 0.01 A
	$T_{IPh>>}$	0.00 s to 60.00 s or ∞ (no trip)	Steps 0.01 s
	$3I_0$>>	0.10 A to 35.00 A[1)] or ∞ (ineffective)	Steps 0.01 A
	$T_{3I0>>}$	0.00 s to 60.00 s or ∞ (no trip)	Steps 0.01 s
Definite time current elements (50Ns-2, 50Ns-1)	I_{Ph}>	0.10 A to 35.00 A[1)] or ∞ (ineffective)	Steps 0.01 A
	$T_{IPh>}$	0.00 s to 60.00 s or ∞ (no trip)	Steps 0.01 s
	$3I_0$>	0.10 A to 35.00 A[1)] or ∞ (ineffective)	Steps 0.01 A
	$T_{3I0>}$	0.00 s to 60.00 s or ∞ (no trip)	Steps 0.01 s
Inverse current elements (51Ns-IEC)	I_P	0.10 A to 4.00 A[1)]	Steps 0.01 A
	T_{IP}	0.05 s to 3.20 s or ∞ (no trip)	Steps 0.01 s
	$3I_{0P}$	0.05 A to 4.00 A[1)]	Steps 0.01 A
	T_{3I0P}	0.05 s to 3.20 s or ∞ (no trip)	Steps 0.01 s
Inverse current elements (51Ns-ANSI)	I_P	0.10 A to 4.00 A[1)]	Steps 0.01 A
	D_{IP}	0.50 s to 15.00 s or ∞ (no trip)	Steps 0.01 s
	$3I_{0P}$	0.05 A to 4.00 A[1)]	Steps 0.01 A
	D_{3I0P}	0.50 s to 15.00 s or ∞ (no trip)	Steps 0.01 s
Tolerances with inverse time [2)]			
currents	3 % of set value or 1 % rated current		
times	1 % of set value or 10 ms		
Tolerances with definite time (IEC) [2)]			
currents		Pickup	at $1.05 \le I/I_P \le 1.15$; or $1.05 \le I/3I0P \le 1.15$

times	5 % ± 15 ms 5 % ± 45 ms	at f_N = 50/60 Hz at f_N = 16.7 Hz
	for 2 ≤ I/I_P≤ 20 and $T_{IP}/s \geq 1$; or 2 ≤ $I/3I_{0P}$ ≤ 20 and $T_{3I0P}/s \geq 1$	
Tolerances with definite time (ANSI) [2]		
times	5 % ± 15 ms 5 % ± 45 ms	at f_N = 50/60 Hz for f_N = 16.7 Hz
	for 2 ≤ I/I_P ≤ 20 for 2 ≤ I/I_P ≤ 20 and $D_{IP}/s \geq 1$; and $D_{3I0P}/s \geq 1$	
The set times are pure delay times. [1]Secondary values for I_N = 1 A; for I_N = 5 A the currents must be multiplied by 5. [2] With one 3-phase measuring location and I/I_N = 1 A/5 A		

Operating Times of the Definite Time Stages

Pickup time / dropout time phase current stages			
Pickup time at frequency	50 Hz	60 Hz	16.7 Hz
without inrush restraint, min.	11 ms	11 ms	16 ms
with inrush restraint, min.	33 ms	29 ms	76 ms
Dropout time, approx.	35 ms	35 ms	60 ms
Pickup time / dropout time residual current stages			
Pickup time at frequency	50 Hz	60 Hz	16.7 Hz
without inrush restraint, min. [1])	21 ms	19 ms	46 ms
with inrush restraint, min. [1])	31 ms	29 ms	56 ms
Dropout time, approx.	45 ms	43 ms	90 ms
[1]) for high-speed relays – 4.5 ms			

Dropout to Pickup Ratios

Current stages	approx. 0.95 for $I/I_N \geq 0.5$

Inrush Restraint

Inrush restraint ratio (2nd harmonic) I_{2fN}/I_{fN}	10 % to 45 %	Steps 1 %
Lower operation limit	I > 0.2 A [1)]	
Max. current for restraint	0.30 A to 25.00 A[1)]	Steps 0.01 A
Cross-block function between phases	can be activated / deactivated	
max. action time for cross-block	0.00 s to 180.00 s	Steps 0.01 s
[1)] Secondary values for I_N = 1 A; for I_N = 5 A the currents must be multiplied by 5.		

Frequency

Frequency influence	within the frequency tagging range

Trip Time Curves acc. to IEC

Acc. to IEC 60255-3 or BS 142, Section 3.5.2 (see also Figure and 4-8)		
INVERSE (Type A)	$t = \frac{0.14}{(I/I_p)^{0.02} - 1} \cdot T_p$	[s]
VERY INVERSE (Type B)	$t = \frac{13.5}{(I/I_p)^{1} - 1} \cdot T_p$	[s]
EXTREMELY INV. (Type C)	$t = \frac{80}{(I/I_p)^{2} - 1} \cdot T_p$	[s]
LONG INVERSE (Type B)	$t = \frac{120}{(I/I_p)^{1} - 1} \cdot T_p$	[s]
Darin bedeuten: t Reset Time T_p Setting Value of the Time Multiplier I Fault Current I_p Setting Value of the Pickup Current		
The tripping times for $I/I_p \geq 20$ are identical to those for $I/I_p = 20$.		
For residual current read 3I0p instead of I_p and T_{3I0p} instead of T_p; for earth faults read I_{Ep} instead of I_p and T_{IEp} instead of T_p		
Pickup Threshold	approx. $1.10 \cdot I_p$	

Dropout Time Curves as per IEC

Acc. to IEC 60255-3 or BS 142, Section 3.5.2 (see also Figure and 4-8)		
INVERSE (Type A)	$t_{Reset} = \frac{9.7}{(I/I_p)^{2} - 1} \cdot T_p$	[s]
VERY INV. (Type B)	$t_{Reset} = \frac{43.2}{(I/I_p)^{2} - 1} \cdot T_p$	[s]
EXTREMELY INV. (Type C)	$t_{Reset} = \frac{58.2}{(I/I_p)^{2} - 1} \cdot T_p$	[s]
LONG INVERSE (Type B)	$t_{Reset} = \frac{80}{(I/I_p)^{2} - 1} \cdot T_p$	[s]
Where: t_{Reset} Reset Time T_p Setting Value of the Time Multiplier I Fault Current I_p Setting Value of the Pickup Current		
The reset time characteristics apply to $(I/Ip) \leq 0.90$		
For residual current read 3I0p instead of I_p and T_{3I0p} instead of T_p; for earth faults read I_{Ep} instead of I_p and T_{IEp} instead of T_p		

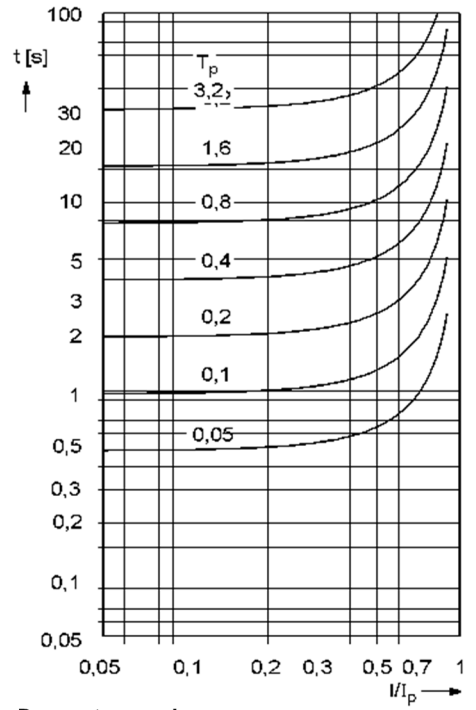

Dropout normal inverse: Type A

$$t = \frac{9,7}{(I/I_p)^2 - 1} \cdot T_p \quad [s]$$

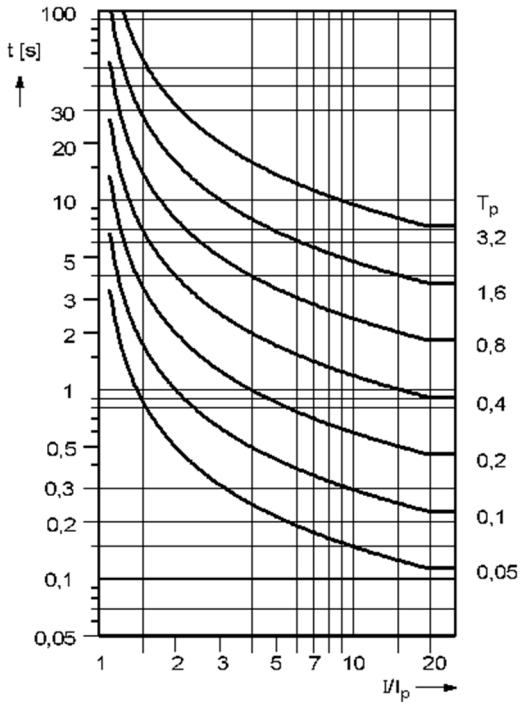

Normal Invers: Type A

$$t = \frac{0,14}{(I/I_p)^{0,02} - 1} \cdot T_p \quad [s]$$

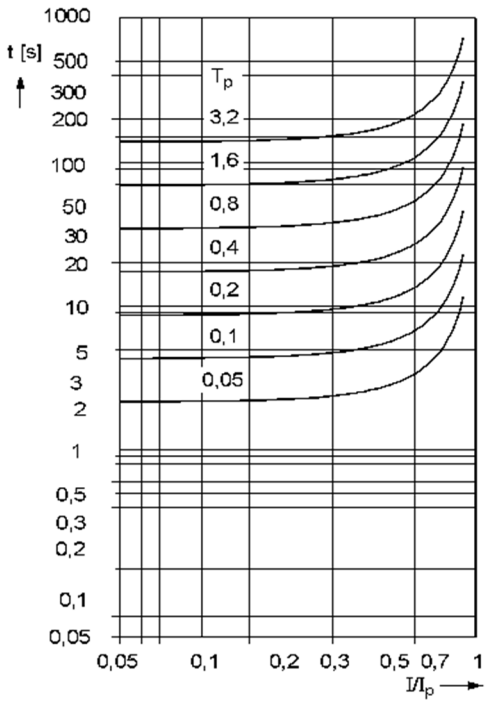

Reset Very Inverse: Type B

$$t = \frac{43,2}{(I/I_p)^2 - 1} \cdot T_p \quad [s]$$

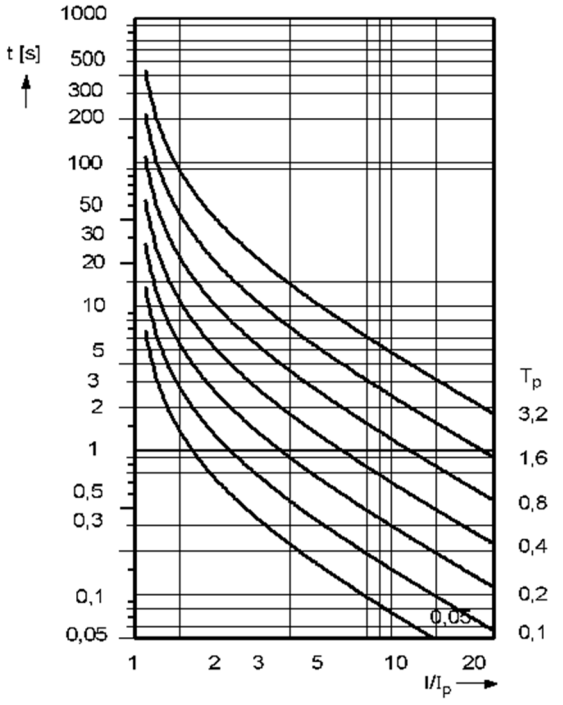

VERY INVERSE: Type B

$$t = \frac{13,5}{(I/I_p)^1 - 1} \cdot T_p \quad [s]$$

Figure 4-7 Dropout time and trip time curves of the inverse time overcurrent protection, as per IEC

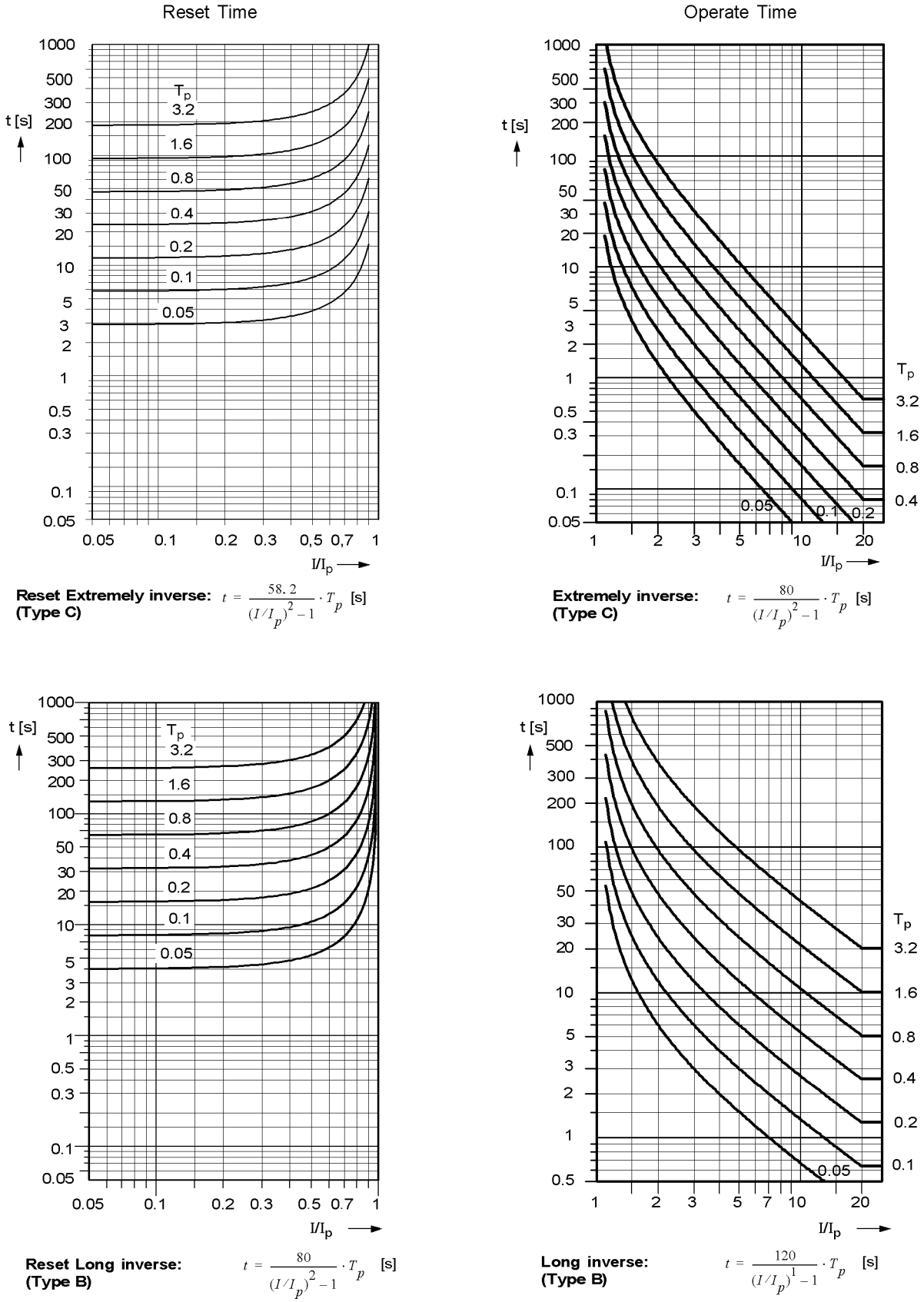

Figure 4-8 Dropout time and trip time curves of the inverse time overcurrent protection, acc. to IEC

Trip Time Curves acc. to ANSI

Acc. to ANSI/IEEE (see also Figures 4-9 to 4-12)

INVERSE	$t = \left(\frac{8.9341}{(I/I_p)^{2.0938} - 1} + 0.17966\right) \cdot D$ [s]
SHORT INVERSE	$t = \left(\frac{0.2663}{(I/I_p)^{1.2969} - 1} + 0.03393\right) \cdot D$ [s]
LONG INVERSE	$t = \left(\frac{5.6143}{(I/I_p) - 1} + 2.18592\right) \cdot D$ [s]
MODERATELY INV.	$t = \left(\frac{0.0103}{(I/I_p)^{0.02} - 1} + 0.0228\right) \cdot D$ [s]
VERY INVERSE	$t = \left(\frac{3.922}{(I/I_p)^{2} - 1} + 0.0982\right) \cdot D$ [s]
EXTREMELY INV.	$t = \left(\frac{5.64}{(I/I_p)^{2} - 1} + 0.02434\right) \cdot D$ [s]
DEFINITE INV.	$t = \left(\frac{0.4797}{(I/I_p)^{1.5625} - 1} + 0.21359\right) \cdot D$ [s]

Where:
- t Trip Time
- D Setting Value of the Time Multiplier
- I Fault Current
- I_p Setting Value of the Pickup Current

The tripping times for $I/I_p \geq 20$ are identical to those for $I/I_p = 20$.

For residual current read 3I0p instead of I_p and T_{3I0p} instead of T_p;
for earth faults read I_{Ep} instead of I_p and T_{IEp} instead of T_p

Pickup Threshold	approx. 1.10 · I_p

Dropout Time Curves as per ANSI/IEEE

Acc. to ANSI/IEEE (see also Figures 4-9 to 4-12)		
INVERSE	$t_{Reset} = \left(\frac{8.8}{(I/I_p)^{2.0938} - 1}\right) \cdot D$	[s]
SHORT INVERSE	$t_{Reset} = \left(\frac{0.831}{(I/I_p)^{1.2969} - 1}\right) \cdot D$	[s]
LONG INVERSE	$t_{Reset} = \left(\frac{12.9}{(I/I_p)^{1} - 1}\right) \cdot D$	[s]
MODERATELY INV.	$t_{Reset} = \left(\frac{0.97}{(I/I_p)^{2} - 1}\right) \cdot D$	[s]
VERY INVERSE	$t_{Reset} = \left(\frac{4.32}{(I/I_p)^{2} - 1}\right) \cdot D$	[s]
EXTREMELY INV.	$t_{Reset} = \left(\frac{5.82}{(I/I_p)^{2} - 1}\right) \cdot D$	[s]
DEFINITE INV.	$t_{Reset} = \left(\frac{1.03940}{(I/I_p)^{1.5625} - 1}\right) \cdot D$	[s]
for $0.5 < (I/I_p) \leq 0.90$	Where: t_{Reset} Reset time D Setting value of the multiplier I Fault Current I_p Setting value of the pickup current	
The reset time characteristics apply to (I/Ip) ≤ 0,90		
For residual current read 3I0p instead of I_p and T_{3I0p} instead of T_p; for earth faults read I_{Ep} instead of I_p and T_{IEp} instead of T_p		

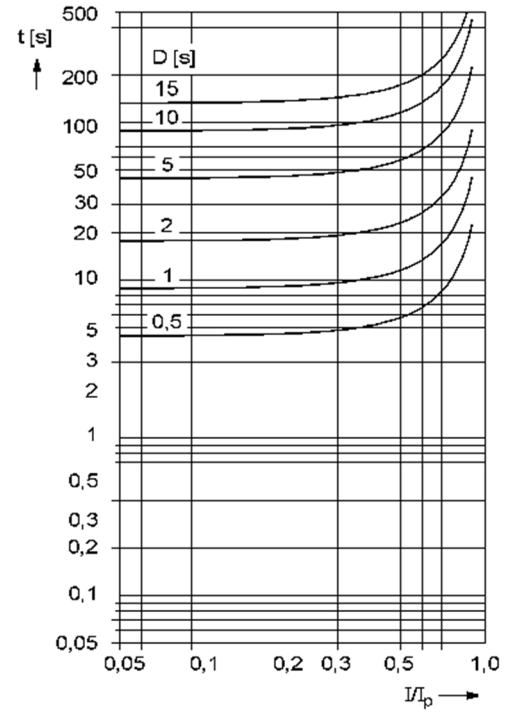

RESET INVERSE $t = \left(\frac{3,8}{(I/I_p)^{2,0938} - 1} \right) \cdot D \ [s]$

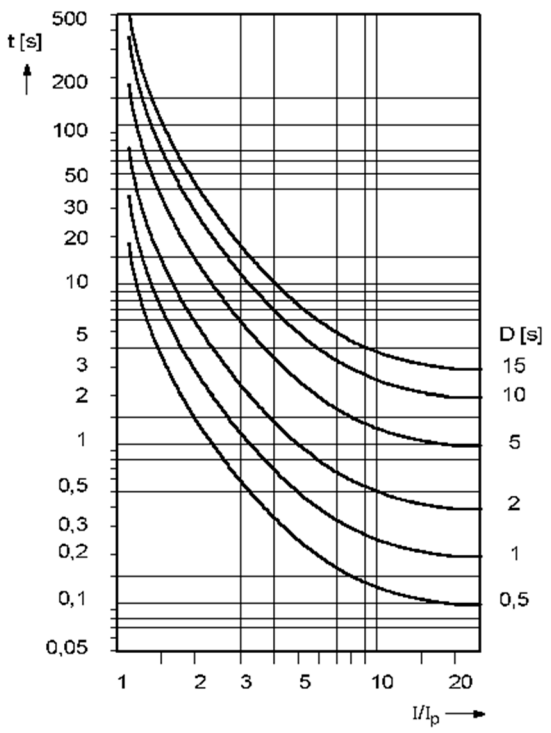

INVERSE $t = \left(\frac{8,9341}{(I/I_p)^{2,0938} - 1} + 0,17966 \right) \cdot D \ [s]$

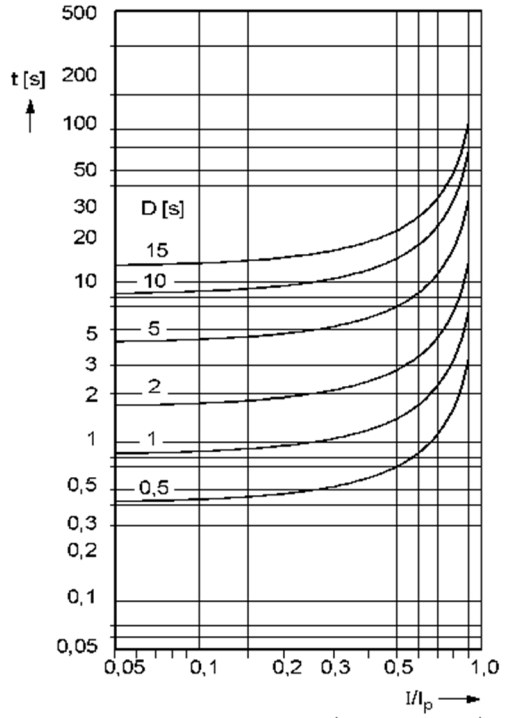

RESET SHORT INVERSE $t = \left(\frac{0,831}{(I/I_p)^{1,2969} - 1} \right) \cdot D \ [s]$

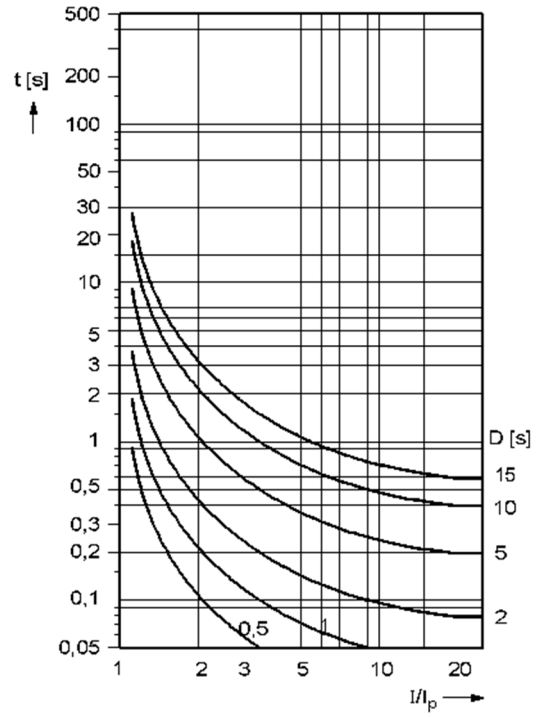

SHORT INVERSE $t = \left(\frac{0,2663}{(I/I_p)^{1,2969} - 1} + 0,03393 \right) \cdot D[s]$

Figure 4-9 Dropout time and trip time curves of the inverse time overcurrent protection, acc. to ANSI/IEEE

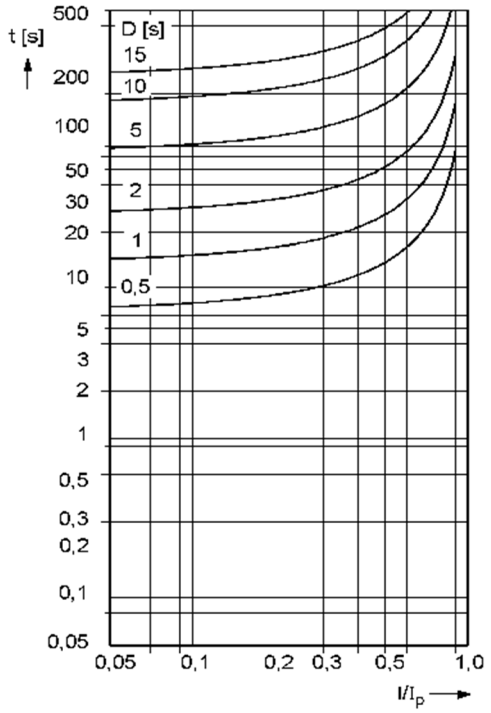

RESET LONG INVERSE $t = \left(\frac{12,9}{(I/I_p)^1 - 1} \right) \cdot D \ [s]$

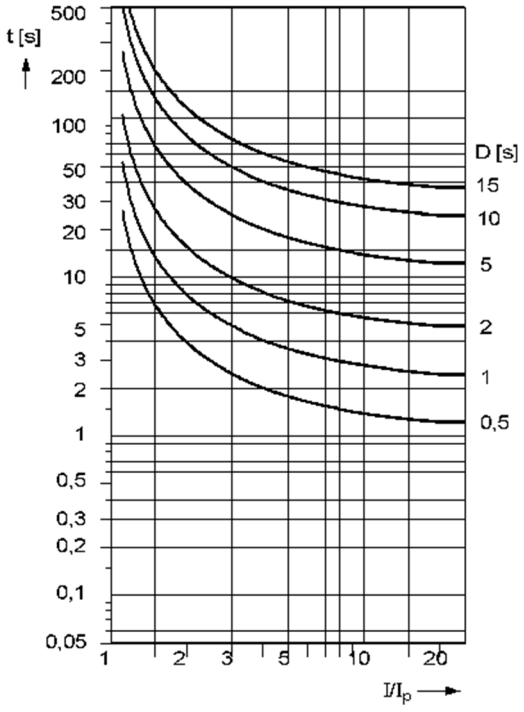

LONG INVERSE $t = \left(\frac{5,6143}{(I/I_p)^1} + 2,18592 \right) \ D \ [s]$

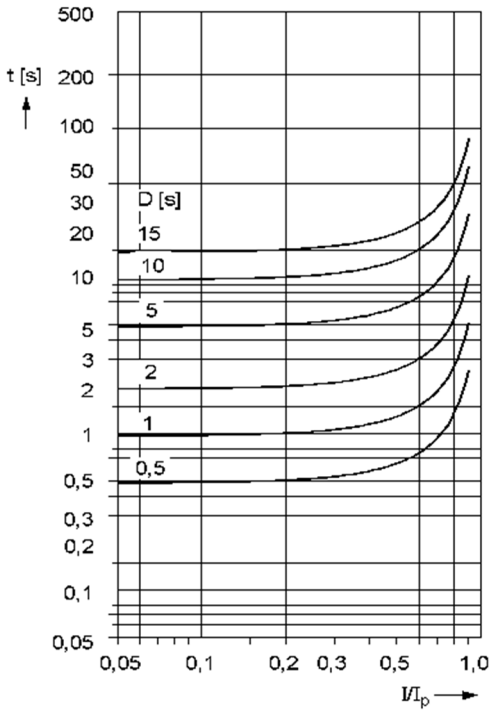

RESET MODERATELY INVERSE $t = \left(\frac{0,97}{(I/I_p)^2 - 1} \right) \cdot D \ [s]$

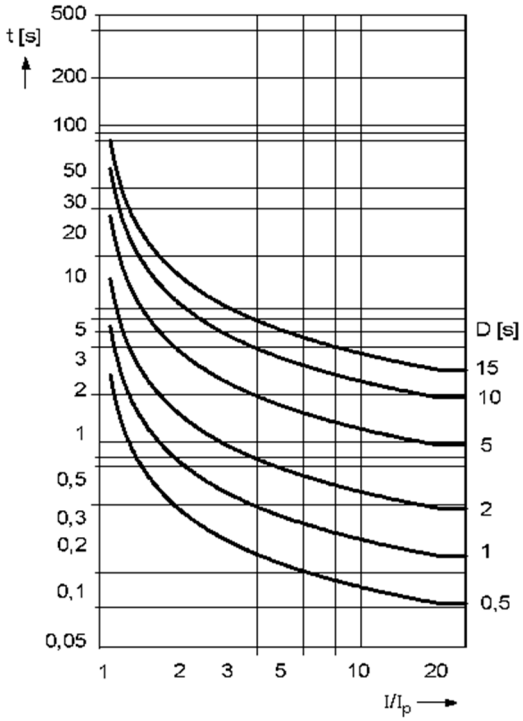

MODERATELY INVERSE $t = \left(\frac{0,0103}{(I/I_p)^{0,02} - 1} + 0,0228 \right) \cdot D[s]$

Figure 4-10 Dropout time and trip time curves of the inverse time overcurrent protection, acc. to ANSI/IEEE

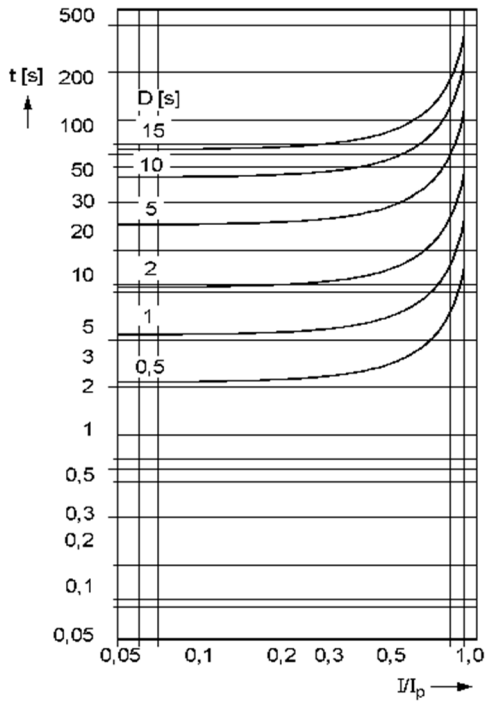

RESET VERY INVERSE $t = \left(\frac{4,32}{(I/I_p)^2 - 1} \right) D$ [s]

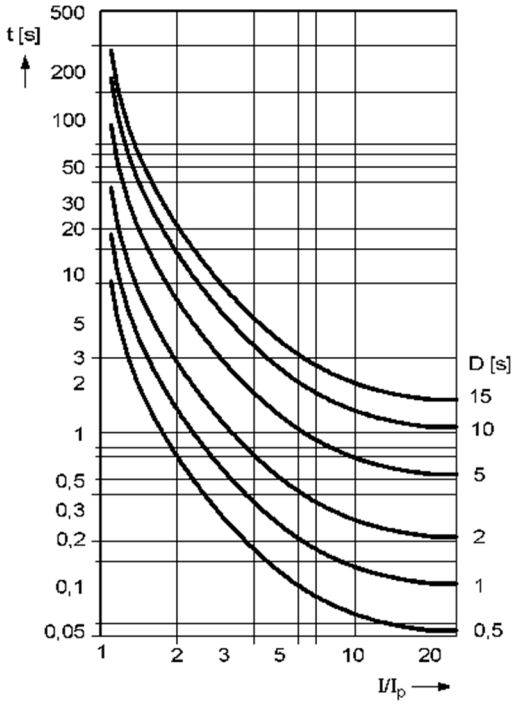

VERY INVERSE: $t = \left(\frac{3,922}{(I/I_p)^2 - 1} + 0,0982 \right) \cdot D$ [s]

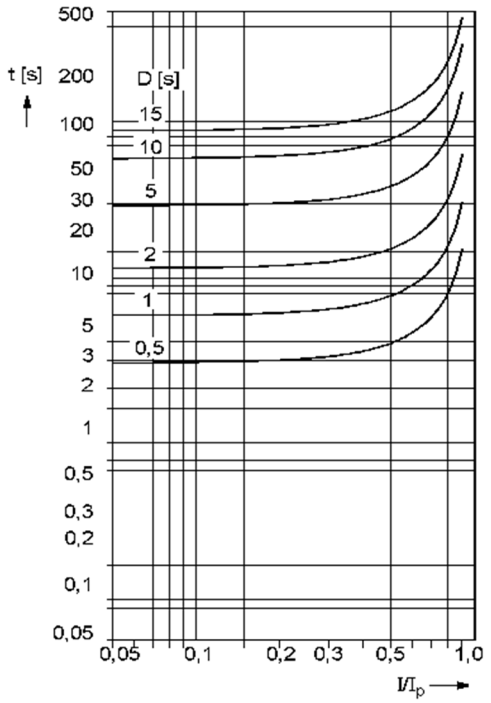

RESET EXTREMELY INVERSE $t = \left(\frac{5,82}{(I/I_p)^2 - 1} \right) \cdot D$ [s]

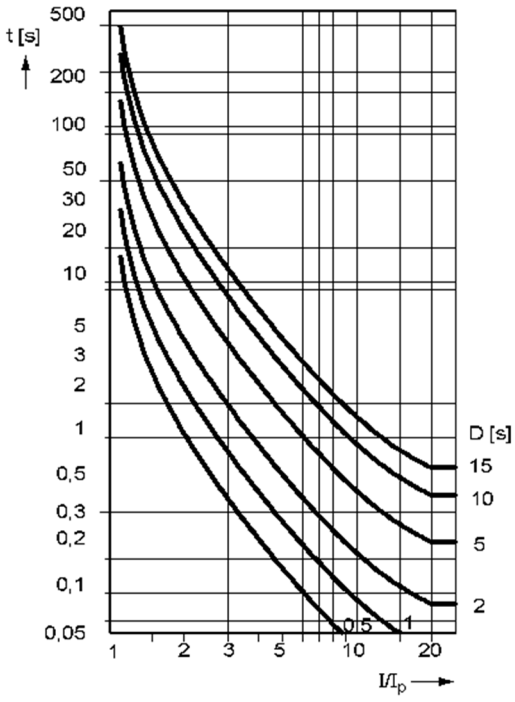

EXTREMELY INVERSE: $t = \left(\frac{5,64}{(I/I_p)^2 - 1} + 0,02434 \right) D$ [s]

Figure 4-11 Dropout time and trip time curves of the inverse time overcurrent protection, acc. to ANSI/IEEE

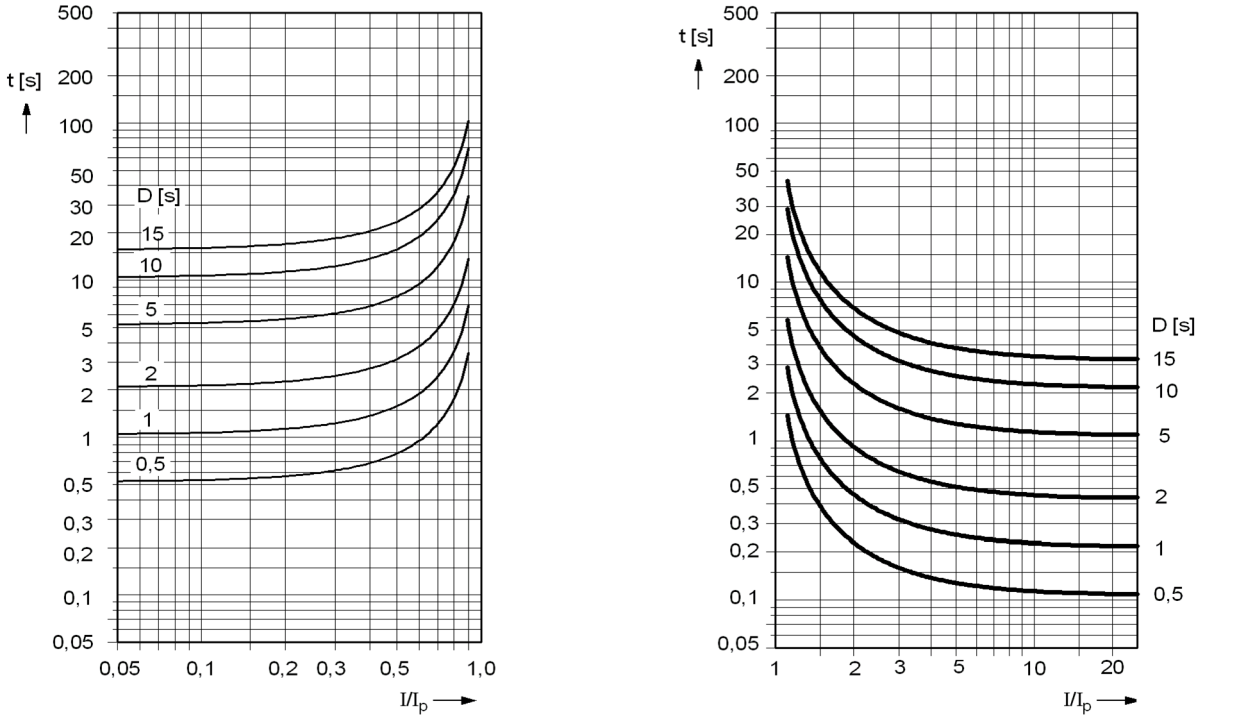

RESET DEFINITE INVERSE $t = \left(\frac{1,0394}{(I/I_p)^{1,5625} - 1} \right) \cdot D$ [s]

DEFINITE INVERSE: $t = \left(\frac{0,4797}{(I/I_p)^{1,5625} - 1} + 0,21359 \right) \cdot D$ [s]

Note:
For earth fault read IEP instead of Ip and DIEp instead of DIp.

Figure 4-12 Dropout time and trip time curve of the inverse time overcurrent protection, acc. to ANSI/IEEE

4.5 Time Overcurrent Protection for Earth Current (Starpoint Current)

Characteristics

Definite-time stages	DT	$I_E>>$, $I_E>$
Inverse time stages (acc. to IEC or ANSI)	IT	I_{EP} The same characteristics apply as for time overcurrent protection for phase and residual currents in accordance with the preceding section
Reset characteristics with disk emulation	IT	The same reset time characteristics apply as for time overcurrent protection for phase and residual currents in accordance with the preceding section

Current Stages

High current stage	$I_E>>$	0.05 A to 35.00 A[1)] or ∞ (ineffective)	Steps 0.01 A
	$T_{IE>>}$	0.00 s to 60.00 s or ∞ (no trip)	Steps 0.01 s
Definite time current element (50Ns-2, 50Ns-1)	$I_E>$	0.05 A to 35.00 A[1)] or ∞ (ineffective)	Steps 0.01 A
	$T_{IE>}$	0.00 s to 60.00 s or ∞ (no trip)	Steps 0.01 s
Inverse current element (51Ns-IEC)	I_{EP}	0.05 A to 4.00 A[1)]	Steps 0.01 A
	T_{IEP}	0.05 s to 3.20 s or ∞ (no trip)	Steps 0.01 s
Inverse current element (51Ns-ANSI)	I_{EP}	0.05 A to 4.00 A[1)]	Steps 0.01 A
	D_{IEP}	0.50 s to 15.0 s or ∞ (no trip)	Steps 0.01 s
Tolerances with definite time			
currents		3 % of setting value or 1 % nominal current	
times		1 % of setting value or 10 ms	
Tolerances with inverse time (IEC)			
currents		Pickup	with $1.05 \le I/I_{EP} \le 1.15$;
times		5 % ± 15 ms 5 % ± 45 ms	at f_N = 50/60 Hz for f_N = 16.7 Hz
		for $2 \le I/I_{EP} \le 20$ and $T_{IEP}/s \ge 1$	
Tolerances with inverse time (ANSI)			
times		5 % ± 15 ms 5 % ± 45 ms	at f_N = 50/60 Hz for f_N = 16.7 Hz
		for $2 \le I/I_{EP} \le 20$ and $D_{IEP}/s \ge 1$	
The set times are pure delay times. [1)] Secondary values for I_N = 1 A; for I_N = 5 A the currents must be multiplied by 5.			

Operating Times of the Definite Time Stages

Pickup time / dropout time			
Pickup time at frequency	50 Hz	60 Hz	16.7 Hz
without inrush restraint, min. [1])	11 ms	11 ms	16 ms
with inrush restraint, min. [1])	33 ms	29 ms	76 ms
Dropout time, approx.	35 ms	35 ms	60 ms
[1]) for high-speed relays, the pick-up times decrease by 4.5 ms			

Dropout to Pickup Ratios

Current stages	approx. 0.95 for $I/I_N \geq 0.5$

Inrush Restraint

Inrush restraint ratio (2nd harmonic) I_{2fN}/I_{fN}	10 % to 45 %	Steps 1 %
Lower operation limit	$I > 0.2$ A [1)]	
Max. current for restraint	0.30 A to 25.00 A[1)]	Steps 0.01 A
[1)] Secondary values for $I_N = 1$ A; for $I_N = 5$ A the currents must be multiplied by 5.		

Frequency

Frequency influence	within the frequency tagging range

4.6 Dynamic Cold Load Pickup for Time Overcurrent Protection

Time Control

Start criterion		Binary input from circuit breaker auxiliary contact or current criterion (of the assigned side)	
CB open time	$T_{CB\ open}$	0 s to 21600 s (= 6 h)	Steps 1 s
Action time	$T_{Action\ time}$	1 s to 21600 s (= 6 h)	Steps 1 s
Accelerated dropout time	$T_{Stop\ Time}$	1 s to 600 s (= 10 min) or ∞ (no accelerated dropout)	Steps 1 s

Setting Ranges and Changeover Values

Dynamic parameters of pickup currents and delay times or time multipliers	Setting ranges and steps are the same as for the functions to be influenced

4.7 Single-Phase Time Overcurrent Protection

Current Stages

High current stage	I>>	0.05 A to 35.00 A[1)] 0.003 A to 1.500 A[2)] or ∞ (ineffective)	Steps 0.01 A Steps 0.001 A
	$T_{I>>}$	0.00 s to 60.00 s or ∞ (no trip)	Steps 0.01 s
Definite time stage	I>	0.05 A to 35.00 A[1)] 0.003 A to 1.500 A[2)] or ∞ (ineffective)	Steps 0.01 A Increments 0.001 A
	$T_{I>}$	0.00 s to 60.00 s or ∞ (no trip)	Steps 0.01 s
Tolerances			
currents	3 % of setting value or 1 % rated current for I_N = 1 A or 5 A 5 % of setting value or 3 % rated current for I_N = 0.1 A		
times	1 % of set value or 10 ms		
The set times are pure delay times. [1)] Secondary values for I_N = 1 A; for I_N = 5 A the currents must be multiplied by 5. [2)] Secondary values for „sensitive“ measurement input, irrespective of nominal current			

Operating Times

Pickup time / dropout time			
for frequency	50 Hz	60 Hz	16.7 Hz
minimum pick-up time[1)]	14 ms	13 ms	14 ms
Dropout time, approx.	25 ms	22 ms	66 ms
[1)] for high-speed relays, the pick-up times decrease by 4.5 ms			

Dropout to Pickup Ratios

Current stages	approx. 0.95 for $I/I_N \geq 0.5$

Frequency

Frequency influence	within the frequency tagging range

4.8 Unbalanced Load Protection

Characteristics

Definite-time stages	DT	$I_2>>$, $I_2>$
Inverse time stages (acc. to IEC or ANSI)	IT	I_{2P} One of the characteristics shown in figures 4-14 to 4-17 can be selected
Reset characteristics with disk emulation	IT	For illustrations of possible reset time characteristics see figures 4-14 to 4-17 on the left-hand side.
Operating Range		0.1 to 4 I/InS

Current Stages

High current stage	$I_2>>$	0.10 A to 3.00 A[1)]	Steps 0.01 A
	$T_{I2}>>$	0.00 s to 60.00 s or ∞ (no trip)	Steps 0.01 s
Definite time current element (50Ns-2, 50Ns-1)	$I_2>$	0.10 A to 3.00 A[1)]	Steps 0.01 A
	$T_{I2}>$	0.00 s to 60.00 s or ∞ (no trip)	Steps 0.01 s
Inverse current element (51Ns-IEC)	I_{2P}	0.10 A to 2.00 A[1)]	Steps 0.01 A
	T_{I2P}	0.05 s to 3.20 s or ∞ (no trip)	Steps 0.01 s
Inverse current element (51Ns-ANSI)	I_{2P}	0.10 A to 2.00 A[1)]	Steps 0.01 A
	D_{I2P}	0.50 s to 15.00 s or ∞ (no trip)	Steps 0.01 s
Tolerances with inverse time [2)]			
currents		3 % of setting value or 1 % nominal current	
times		1 % of setting value or 10 ms	
Tolerances with definite time (IEC) [2)]			
currents		Pickup	with $1.05 \leq I_2/I_{2P} \leq 1.15$
times		5 % ± 15 ms 5 % ± 45 ms	at f_N = 50/60 Hz for f_N = 16.7 Hz
		for $2 \leq I_2/I_{2P} \leq 20$ and $T_{I2P}/s \geq 1$	
Tolerances with definite time (ANSI) [2)]			
times		5 % ± 15 ms 5 % ± 45 ms	at f_N = 50/60 Hz for f_N = 16.7 Hz
		for $2 \leq I_2/I_{2P} \leq 20$ and $D_{I2P}/s \geq 1$	
The set times are pure delay times. [1)] Secondary values for I_N = 1 A; for I_N = 5 A the currents must be multiplied by 5. [2)] For one 3-phase measuring location			

Operating Times of the Definite Time Stages

Pickup time / dropout time			
Pickup time at frequency	50 Hz	60 Hz	16.7 Hz
minimum [1])	41 ms	34 ms	106 ms
Dropout time, approx.	23 ms	20 ms	60 ms
[1]) for high-speed relays, the pick-up times decrease by 4.5 ms			

Dropout to Pickup Ratios

Current stages	approx. 0.95 for $I_2/I_N \geq 0.5$

Frequency

Frequency influence	within the frequency tagging range

Dropout times of the thermal curve

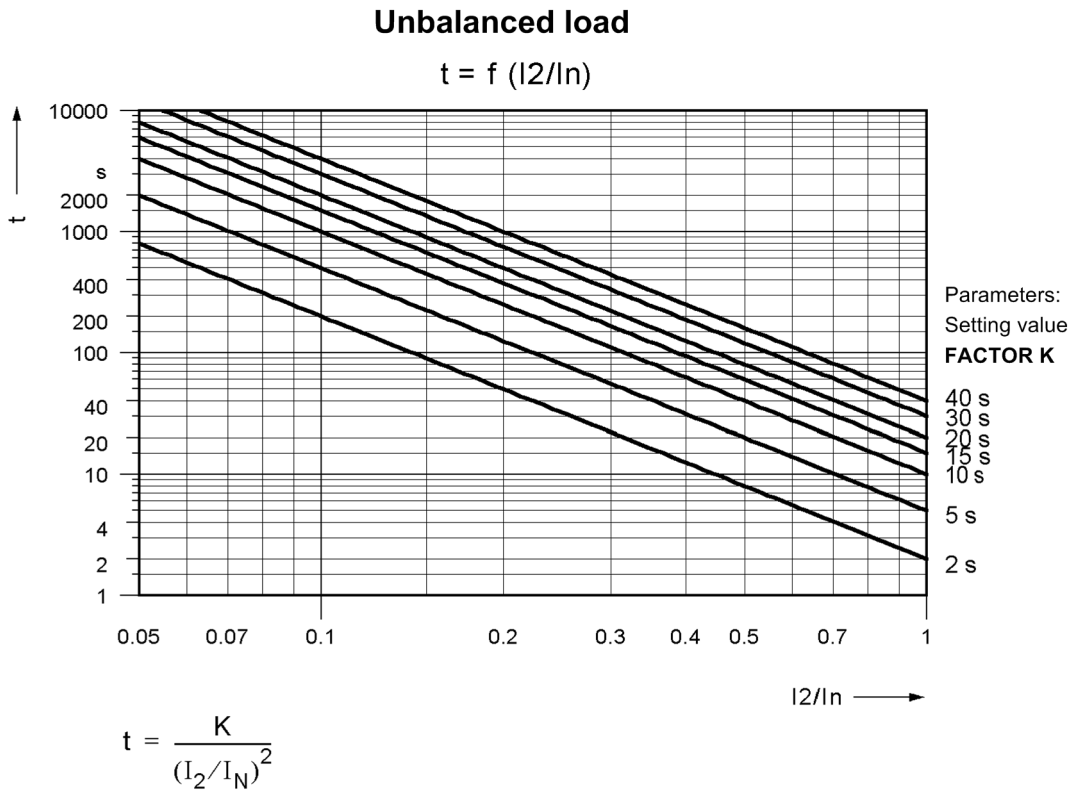

Figure 4-13 Trip times of the Thermal Characteristic for Unbalanced Load Protection

Trip Time Curves acc. to IEC

One of the tripping characteristics displayed on the right-hand side of Figures 4-14 and 4-15 can be selected.

INVERSE

$$t_{TRIP} = \frac{0.14}{(I_2 / I_{2p})^{0.02} - 1} \cdot T_{I2p} \quad [s]$$

VERY INVERSE

$$t_{TRIP} = \frac{13.5}{(I_2 / I_{2p})^{1} - 1} \cdot T_{I2p} \quad [s]$$

EXTREMELY INV.

$$t_{TRIP} = \frac{80}{(I_2 / I_{2p})^{2} - 1} \cdot T_{I2p} \quad [s]$$

Where:

t_{TRIP} Trip Time
T_{I2p} Setting Value of the Time Multiplier
I_2 Negative Sequence Current
I_{2p} Setting Value of the Pickup Current

The trip times for $I_2/I_{2p} \geq 20$ are identical to those for $I_2/I_{2p} = 20$.

Pickup Threshold	approx. $1.10 \cdot I_{2p}$

Reset Curves with Disk Emulation according to IEC

For illustrations of possible reset time characteristics see figures 4-14 and 4-15 on the left-hand side.

INVERSE (Type A)

$$t_{Reset} = \frac{9.7}{(I_2 / I_{2p})^{2} - 1} \cdot T_{I2p} \quad [s]$$

VERY INV. (Type B)

$$t_{Reset} = \frac{43.2}{(I_2 / I_{2p})^{2} - 1} \cdot T_{I2p} \quad [s]$$

EXTREMELY INV. (Type C)

$$t_{Reset} = \frac{58.2}{(I_2 / I_{2p})^{2} - 1} \cdot T_{I2p} \quad [s]$$

Where:

t_{Reset} Reset time
T_{I2p} Setting value of the time multiplier
I_2 Negative sequence currents
I_{2p} Setting value of the pickup current

The dropout time characteristics apply to the range $0.05 \leq (I_2/I_{2p}) \leq 0.90$

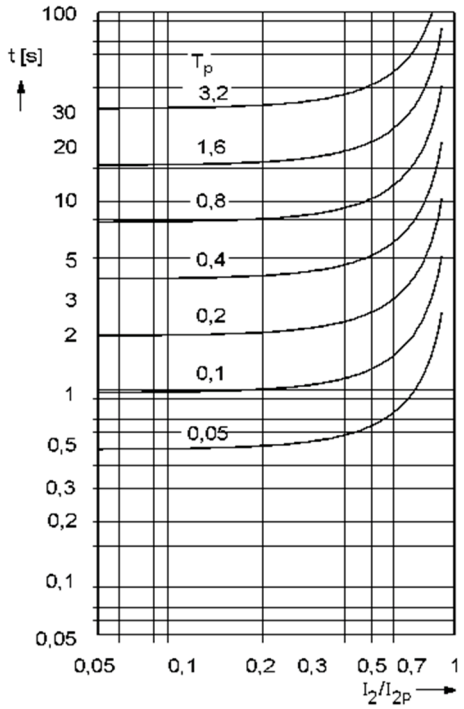

Dropout normal inverse: Type A

$$t_{Retom.} = \frac{9,7}{(I_2/I_{2p})^2 - 1} \cdot T_{I2p} \quad [s]$$

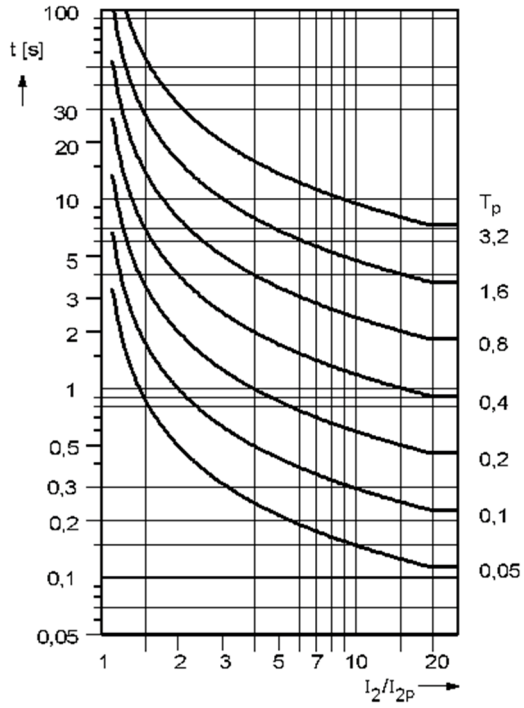

Normal Invers: Type A

$$t = \frac{0,14}{(I_2/I_{2p})^{0,02} - 1} \cdot T_{I2p} \quad [s]$$

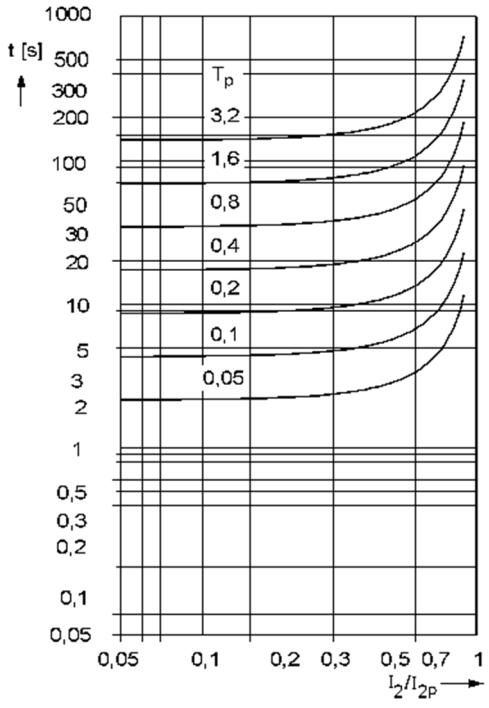

Reset Very Inverse: Type B

$$t_{Retom.} = \frac{43,2}{(I_2/I_{2p})^2 - 1} \cdot T_{I2p} \quad [s]$$

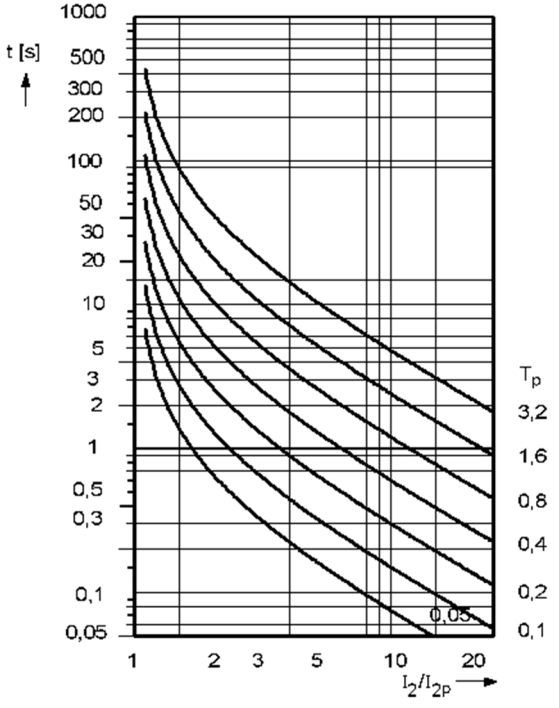

VERY INVERSE: Type B

$$t = \frac{13,5}{(I_2/I_{2p})^1 - 1} \cdot T_{I2p} \quad [s]$$

Figure 4-14 Dropout time and trip time characteristics of the inverse time unbalanced load stage, as per IEC

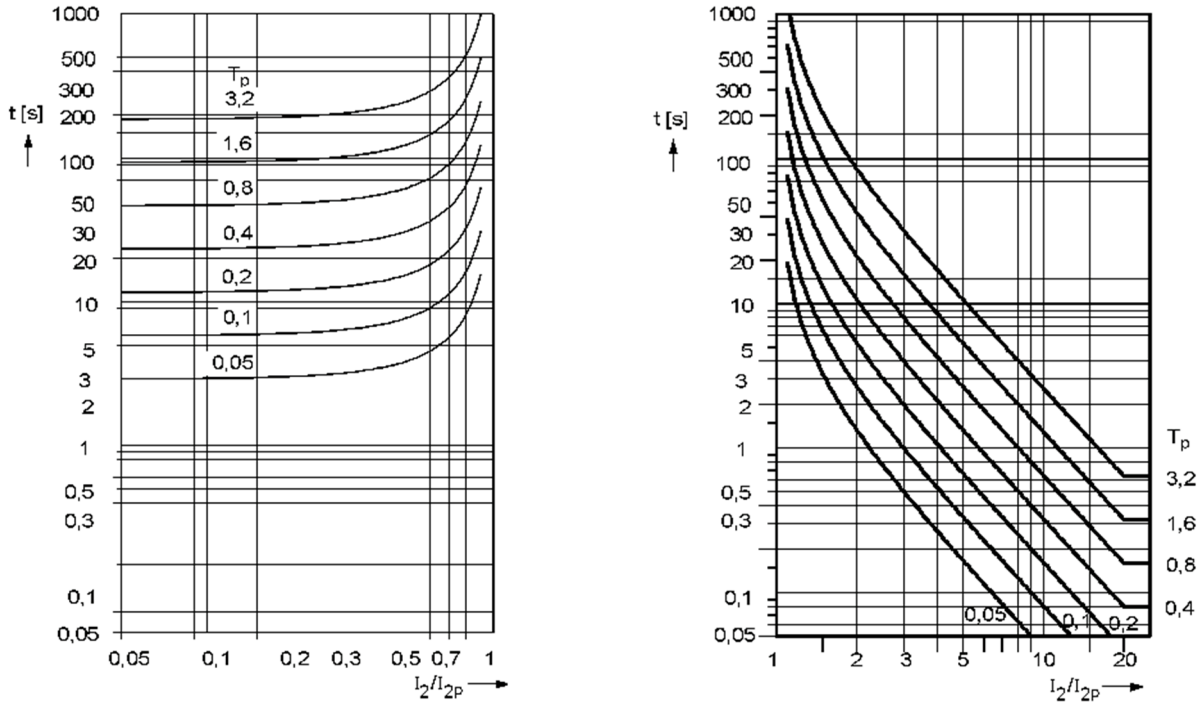

Reset Extremely Inverse: Type C

$$t_{Retom.} = \frac{58{,}2}{(I_2/I_{2p})^2 - 1} \cdot T_{I2p} \quad [s]$$

Extremely Inverse: Type C

$$t = \frac{80}{(I_2/I_{2p})^2 - 1} \cdot T_{I2p} \quad [s]$$

Figure 4-15 Dropout time and trip time characteristics of the inverse time unbalanced load stage, as per IEC

Trip Time Curves acc. to ANSI

One of the tripping curves depicted in the figures 4-16 and 4-17 on the right-hand side may be selected.

INVERSE

$$t_{TRIP} = \left(\frac{8.9341}{(I_2/I_{2p})^{2.0938} - 1} + 0.17966\right) \cdot D_{I2p} \quad [s]$$

MODERATELY INVERSE

$$t_{TRIP} = \left(\frac{0.0103}{(I_2/I_{2p})^{0.02} - 1} + 0.0228\right) \cdot D_{I2p} \quad [s]$$

VERY INVERSE

$$t_{TRIP} = \left(\frac{3.922}{(I_2/I_{2p})^2 - 1} + 0.0982\right) \cdot D_{I2p} \quad [s]$$

EXTREMELY INV.

$$t_{TRIP} = \left(\frac{5.64}{(I_2/I_{2p})^2 - 1} + 0.02434\right) \cdot D_{I2p} \quad [s]$$

Where:

t_{TRIP}	Trip Time
D_{I2p}	Setting Value of the Time Multiplier
I_2	Negative Sequence Currents
I_{2p}	Setting Value of the Pickup Current

The tripping times for $I_2/I_{2p} \geq 20$ are identical to those for $I_2/I_{2p} = 20$.

Pickup Threshold	Approx. $1.10 \cdot I_{2p}$

Reset Curves with Disk Emulation according to ANSI

For illustrations of possible reset time characteristics see figures 4-16 and 4-17 on the left-hand side.

INVERSE

$$t_{Reset} = \left(\frac{8.8}{(I_2 / I_{2p})^{2.0938} - 1}\right) \cdot D_{I2p} \quad [s]$$

MODERATELY INV.

$$t_{Reset} = \left(\frac{0.97}{(I_2 / I_{2p})^{2} - 1}\right) \cdot D_{I2p} \quad [s]$$

VERY INVERSE

$$t_{Reset} = \left(\frac{4.32}{(I_2 / I_{2p})^{2} - 1}\right) \cdot D_{I2p} \quad [s]$$

EXTREMELY INV.

$$t_{Reset} = \left(\frac{5.82}{(I_2 / I_{2p})^{2} - 1}\right) \cdot D_{I2p} \quad [s]$$

Where:

t_{Reset}	Reset Time
D_{I2p}	Setting Value of the Time Multiplier
I_2	Negative Sequence Current
I_{2p}	Setting Value of the Pickup Current

The dropout times constants apply to $(I_2/I_{2p}) \leq 0.90$

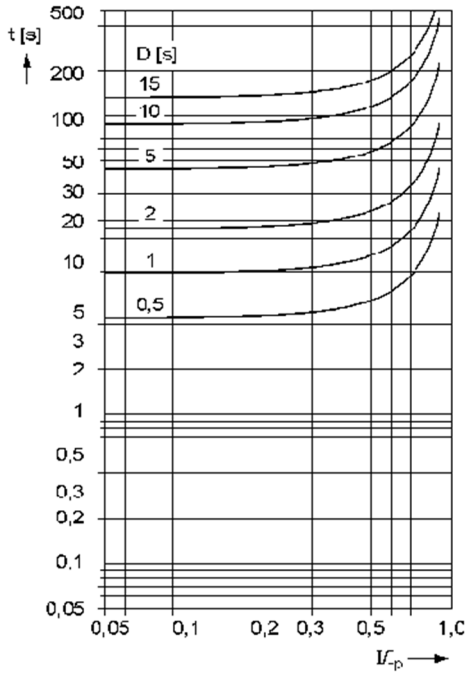

RESET INVERSE $t = \left(\frac{8,8}{(I/I_p)^{2,0938} - 1} \right) \cdot D \ [s]$

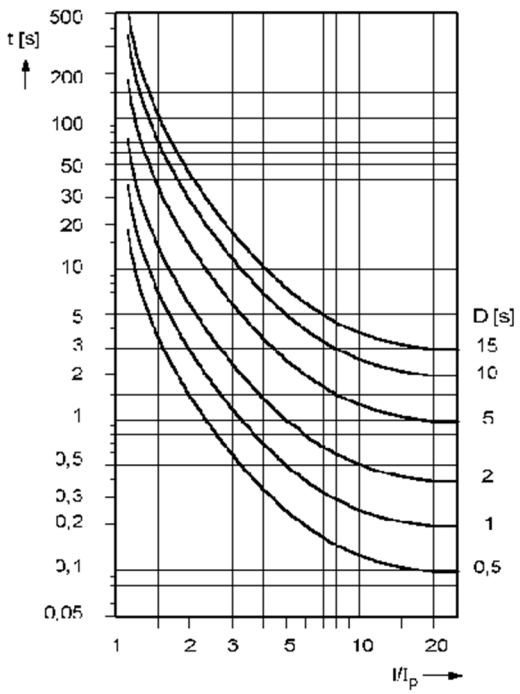

INVERSE $t = \left(\frac{8,9341}{(I/I_p)^{2,0938} - 1} + 0,17966 \right) \cdot D \ [s]$

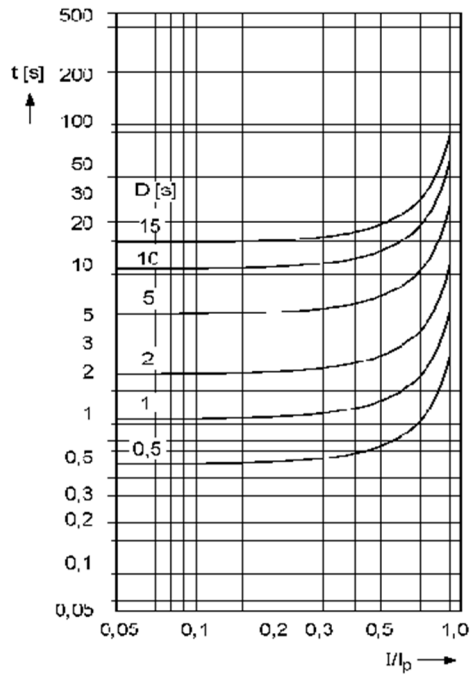

RESET MODERATELY INVERSE $t = \left(\frac{0,97}{(I/I_p)^{2} - 1} \right) \cdot D \ [s]$

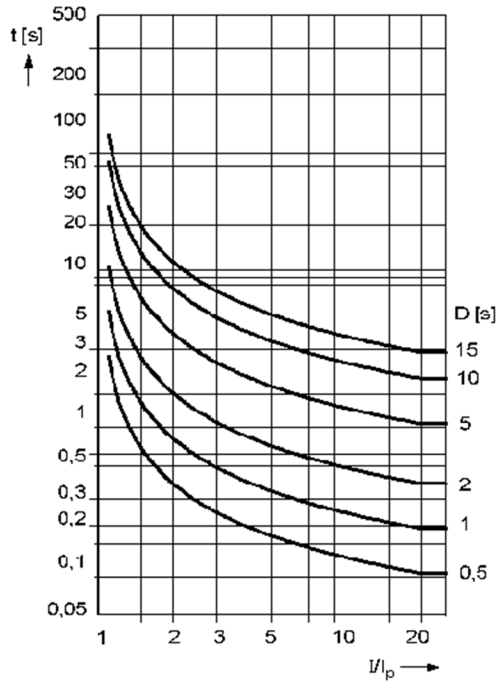

MODERATELY INVERSE $t = \left(\frac{0,0103}{(I/I_p)^{0,02} - 1} + 0,0228 \right) \cdot D \ [s]$

Figure 4-16 Dropout time and trip time characteristics of the inverse time unbalanced load stage, acc. to ANSI

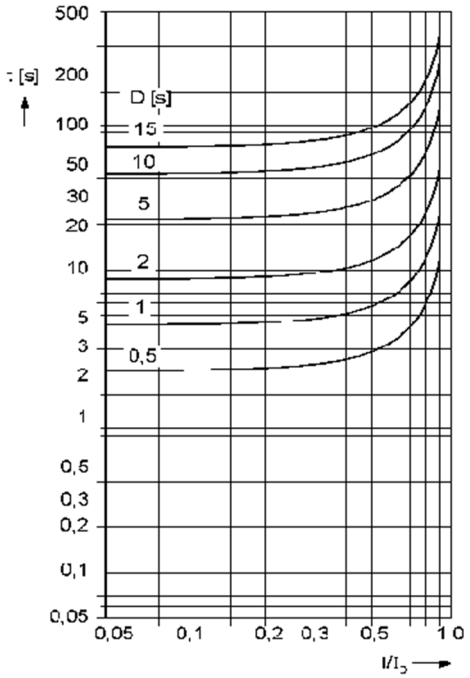

RESET VERY INVERSE $t = \left(\frac{4,32}{(I/I_p)^2 - 1}\right) \cdot D$ [s]

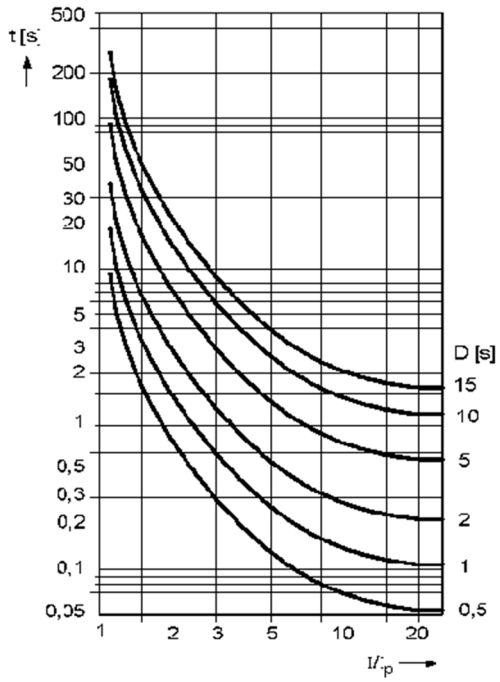

VERY INVERSE: $t = \left(\frac{3,922}{(I/I_p)^2 - 1} + 0,0982\right) \cdot D$ [s]

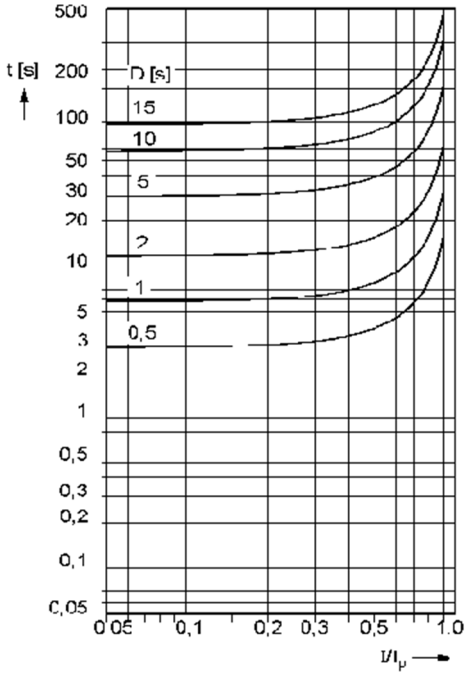

RESET EXTREMELY INVERSE $t = \left(\frac{5,82}{(I/I_p)^2 - 1}\right) \cdot D$ [s]

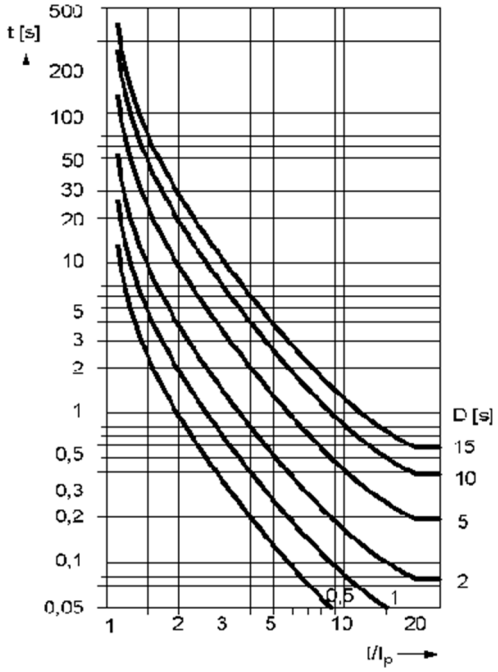

EXTREMELY INVERSE $t = \left(\frac{5,64}{(I/I_p)^2 - 1} + 0,02434\right) \cdot D$ [s]

Figure 4-17 Dropout time and trip time characteristics of the inverse time unbalanced load stage, acc. to ANSI

4.9 Thermal Overload

Setting Ranges

Factor k according to IEC 60255-8		0.10 to 4.00	Steps 0.01
Time constant	τ	1.0 min to 999.9 min	Increments 0.1 min
Cooling down factor at motor stand-still	K_τ-factor	1.0 to 10.0	Steps 0.1
Thermal alarm stage	$\Theta_{Alarm}/\Theta_{Trip}$	50% to 100% referred to trip temperature rise	Steps 1 %
Current alarm stage	I_{Alarm}	0.10 to 4.00 A [1)]	Steps 0.01 A
Start-up recognition	$I_{motor\ startup}$	0.60 to 10.00 A [1)] or ∞ (no start-up recognition)	Steps 0.01 A
Emergency start run-on time	$T_{Run\text{-}on}$	10 s to 15000 s	Steps 1 s
[1)] Secondary values based on I_N = 1 A; for I_N = 5 A the currents must be multiplied by 5.			

Trip Curve

Trip Characteristic Curve for $(I/k \cdot I_N) \leq 8$

$$t = \tau_{th} \cdot \ln \frac{\left(\frac{I}{k \cdot I_N}\right)^2 - \left(\frac{I_{pre}}{k \cdot I_N}\right)}{\left(\frac{I}{k \cdot I_N}\right)^2 - 1}$$

Where:

t	Trip Time
τ_{th}	Heating-up Time Constant
I	Actual Load Current
I_{pre}	Pre-load Current
k	Setting Factor per IEC 60255-8
I_N	Nominal Current of the Protected Object

Dropout to Pickup Ratios

Θ/Θ_{OFF}	Dropout with Θ_{Alarm}
Θ/Θ_{Alarm}	approx. 0.99
I/I_{Alarm}	approx. 0.97

Tolerances

For one 3-phase measuring location	
relating to $k \cdot I_N$	3 % or 10 mA [1)]; class 3% according to IEC 60255-8
Referring to tripping time	3 % or 1.2 s at f_N = 50 / 60 Hz 5 % or 1.2 s at f_N = 16.7 Hz for $I/(k \cdot I_N) > 1.25$
[1)] Secondary values based on I_N = 1 A; for I_N = 5 A the currents must be multiplied by 5.	

Frequency Influence referring to k · I_N

Frequency in range 0.9 ≤ f/f_N ≤ 1.1	1 % at f_N = 50 / 60 Hz 3 % at f_N = 16.7 Hz

Characteristic

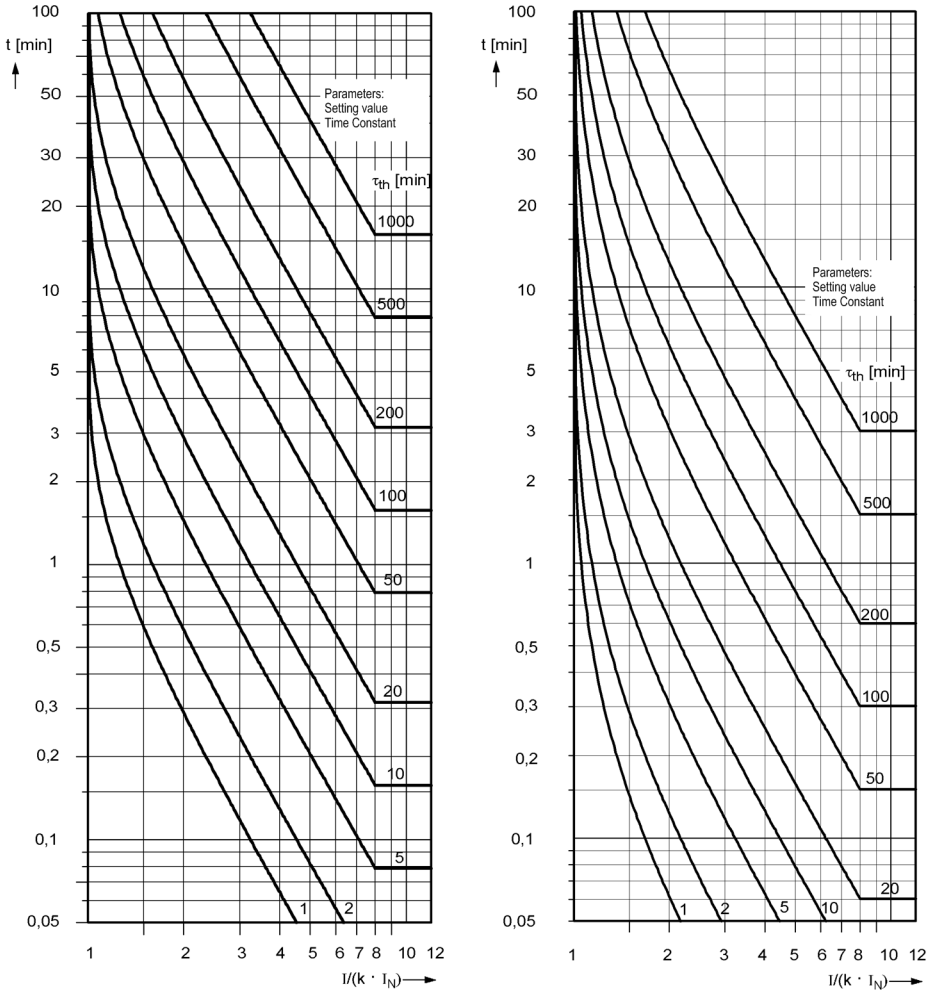

without pre-load:

$$t = \tau_{th} \cdot ln \frac{\left(\frac{I}{k \cdot I_N}\right)^2}{\left(\frac{I}{k \cdot I_N}\right)^2 - 1} \text{ [min]}$$

with 90 % pre-load:

$$t = \tau_{th} \cdot ln \frac{\left(\frac{I}{k \cdot I_N}\right)^2 - \left(\frac{I_{Trip}}{k \cdot I_N}\right)^2}{\left(\frac{I}{k \cdot I_N}\right)^2 - 1} \text{ [min]}$$

Figure 4-18 Trip time characteristic of thermal overload protection

τ Tripping time

τ Thermal time constant

I Load current

I_{pre} Previous load current

k Setting factor according to IEC 60255-8

I_{Nom} Rated current of protected object

Temperature Detectors

Number of measuring points	from 1 RTD-box (up to 6 measuring points) or from 2 RTD-boxes (up to 12 measuring points)
For hot-spot calculation **one** temperature detector must be connected.	

Cooling

Cooling method	ON (oil natural) OF (oil forced) OD (oil directed)	
Oil exponent Y	1.6 to 2.0	Steps 0.1
Hot-spot to top-oil gradient Hgr	22 to 29	Steps 1

Annunciation Thresholds

Warning temperature hot-spot or	98 °C to 140 °C 208 °F to 284 °F	Steps 1 °C Increments 1 °F
Alarm temperature hot-spot or	98 °C to 140 °C 208 °F to 284 °F	Steps 1 °C Steps 1 °F
Warning ageing rate	0.125 to 128.000	Steps 0.001
Alarm ageing rate	0.125 to 128.000	Steps 0.001

4.10 RTD Boxes for Overload Detection

Temperature Detectors

Connectable RTD-boxes	1 or 2
Number of temperature detectors per RTD-box	Max. 6
Type of measurement	Pt 100 Ω or Ni 100 Ω or Ni 120 Ω Selectable: 2 or 3-wire connection
Mounting identification	„Oil“ or „Ambient“ or „Stator“ or „Bearing“ or „Other“

Operational Measured Values

Number of measuring points		Max. 12 temperature measuring points
	Temperature unit	°C or °F (settable)
	Measuring range - For Pt 100 - For Ni 100 - For Ni 120	 –199 °C to 800 °C (–326 °F to 1472 °F) –54 °C to 278 °C (–65 °F to 532 °F) –52 °C to 263 °C (–62 °F to 505 °F)
	Resolution	1 °C or 1 °F
	Tolerance	± 0.5% of measured value ± 1 digit

Annunciation Thresholds

For each measuring point:		
Stage 1	–58 °F to 482 °F or –50 °C to 250 °C or ∞ (no indication) or ∞ (no indication)	(in increments of 1 °C) (in increments of 1 °F)
Stage 2	–58 °F to 482 °F or –50 °C to 250 °C or ∞ (no indication) or ∞ (no indication)	(in increments of 1 °C) (in increments of 1 °F)

4.11 Overload Protection

Setting Ranges

Pickup threshold (warning stage)	$\frac{U/U_N}{f/f_N}$	1.00 to 1.20	Steps 0.01
Pickup threshold (stepped characteristic)	$\frac{U/U_N}{f/f_N}$	1.00 to 1.40	Steps 0.01
Time delay (warning stage and stepped charact.)	T U/f>, T U/f>>	0.00 to 60.00 s or ∞ (ineffective)	Steps 0.01 s
Pair of values for characteristic of	U/f	1.05/1.10/1.15/1.20/1.25/1.30/1.35/1.40	
Associated time delays for thermal characteristic	t (U/f)	1 s to 20,000 s	Steps 1 s
Time for cool down	$T_{COOL\ DOWN}$	1 s to 20,000 s	Steps 1 s

Times

Pickup/dropout times of warning stage and stepped characteristic			
Pickup time at frequency	50 Hz	60 Hz	16.7 Hz
Minimum	36 ms	31 ms	91 ms
Dropout time, approx.	36 ms	23 ms	70 ms

Dropout-to-Pickup Ratio

Dropout/Pickup	approx. 0.95

Tripping Time Characteristic

Thermal replica and stepped characteristic	For default settings see Figure 4-19

Tolerances

U/f pickup	3 % of set value
Time delay (warning stage and stepped charact.)	1 % of setting value, or 10 ms (min. 1.5 cycles)
Thermal replica	5 %, related to U/f ± 600 ms

Influencing Variables

Power supply direct voltage in range $0.8 \leq U_H/U_{HN} \leq 1.15$	≤ 1 %
Temperature in range $-5\ °C \leq \delta_{amb} \leq 55\ °C$	≤ 0.5 %/10 K
Frequency in range $0.95 \leq f/f_N \leq 1.05$	≤ 1 %
Harmonic currents	
up to 10 % 3rd harmonic up to 10 % 5th harmonic	≤ 1 % ≤ 1 %

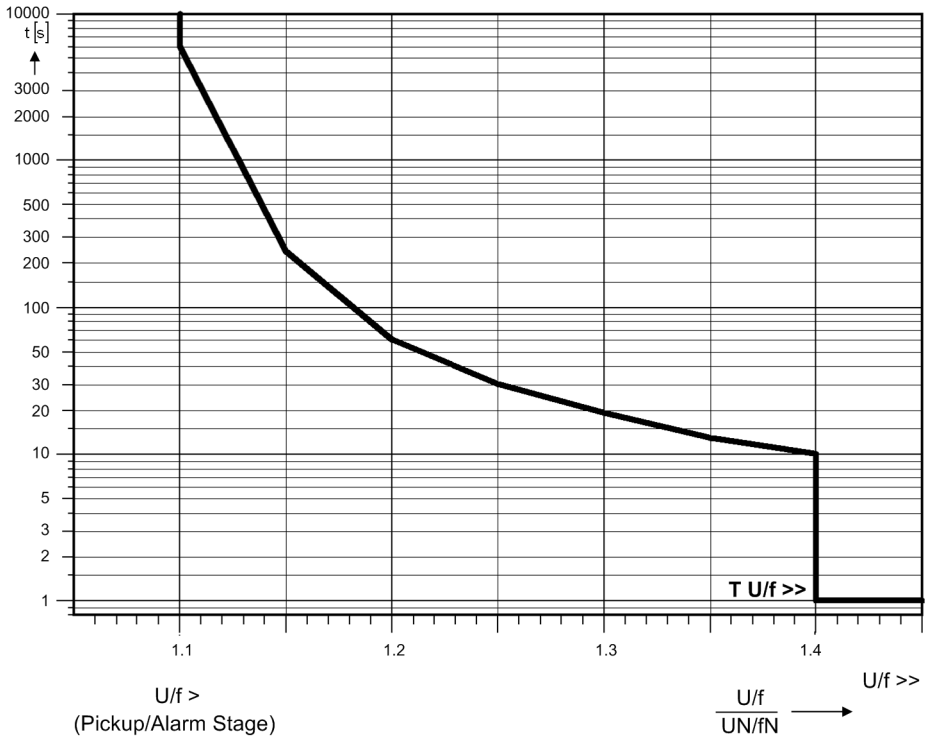

Figure 4-19 Resulting tripping characteristic from thermal replica and stepped characteristic of the overexcitation protection (default settings)

4.12 Reverse Power Protection

Setting Ranges / Increments

Reverse power $P_{reverse}>$	-3000.0 W up to -1.7 W -17.00 P/SnS up to - 0.01 P/SnS	Increment 0.1 W Increment 0.01 P.SnS
Delay Times T	0,00 s to 60.00 s or ∞ (disabled)	Increments 0.01 s

Times

Pickup Times - Reverse Power $P_{rev}>$	with high–accuracy measurement: approx. 330 ms at f = 50 Hz approx. 310 ms at f = 60 Hz approx. 970 ms at f = 16.7 Hz with high-speed measurement: approx. 30 ms at f = 50 Hz approx. 30 ms at f = 60 Hz approx. 70 ms at f = 16.7 Hz
Dropout Times - Reverse Power $P_{rev}>$	with high–accuracy measurement: approx. 330 ms at f = 50 Hz approx. 310 ms at f = 60 Hz approx. 970 ms at f = 16.7 Hz with high-speed measurement: approx. 30 ms at f = 50 Hz approx. 30 ms at f = 60 Hz approx. 70 ms at f = 16.7 Hz

Dropout Ratios

Reverse power $P_{reverse}>$	approx. 0.6

Tolerances

Reverse power $P_{reverse}>$	0.25 % S_N ±3 % of the setting value at $Q < 0.5\ S_N$ (S_N: Rated apparent power, Q: Reactive power
Delay Times T	1 % or 10 ms

Influencing Variables for Pickup Values

Power supply direct voltage in range $0.8 \leq U/U_{HN} \leq 1{,}15$	≤ 1 %
Temperature in range $-5\ °C \leq \Theta_{amb} \leq 55\ °C$	≤ 0.5 %/10 K
Frequency in range $0.95 \leq f/f_N \leq 1.05$	≤ 1 %
Harmonics - up to 10 % 3rd harmonic - up to 10 % 5th harmonic	 ≤ 1 % ≤ 1 %

4.13 Forward active power supervision

Setting Ranges / Increments

Forward power $P_{forward}<$	1.7 W up to 3000.0 W 0.01 P/SnS up to 17.00 P/SnS	Increment 0.1 W Increment 0.1 W
Forward power $P_{forward}>$	1.7 W up to 3000.0 W 0.01 P/SnS up to 17.00 P/SnS	Increment 0.1 W Increment 0.1 W
Delay Times T	0,00 s to 60.00 s or ∞ (disabled)	Increments 0.01 s

Times

Pickup times - Active power P<, P>	with high–accuracy measurement: approx. 330 ms at f = 50 Hz approx. 310 ms at f = 60 Hz approx. 970 ms at f = 16.7 Hz with high-speed measurement: approx. 30 ms at f = 50 Hz approx. 30 ms at f = 60 Hz approx. 70 ms at f = 16.7 Hz
Dropout times - active power P<, P>	with high–accuracy measurement: approx. 330 ms at f = 50 Hz approx. 310 ms at f = 60 Hz approx. 970 ms at f = 16.7 Hz with high-speed measurement: approx. 30 ms at f = 50 Hz approx. 30 ms at f = 60 Hz approx. 70 ms at f = 16.7 Hz

Dropout Ratios

Active power $P_{Act}<$	approx. 1.10 or 0.5 % of S_N
Active power $P_{Act}>$	approx. 0.90 or 0.5 % of S_N

Tolerances

Active power P<, P>	0.25 % S_N ±3 % of setting value with high-accuracy measurement 0.5 % S_N ±3 % of setting value with high-speed measurement (S_N: Rated apparent power)
Delay Times T	1 % or 10 ms

Influencing Variables for Pickup Values

Power supply direct voltage in range $0.8 \leq U_H/U_{HN} \leq 1{,}15$	≤ 1 %
Temperature in range $-5\ °C \leq \Theta_{amb} \leq 55\ °C$	≤ 0.5 %/10 K
Frequency in range $0.95 \leq f/f_N \leq 1.05$	≤ 1 %
Harmonics - up to 10 % 3rd harmonic - up to 10 % 5th harmonic	 ≤ 1 % ≤ 1 %

4.14 Undervoltage Protection

Setting Ranges / Increments

Measured quantity	Positive Sequence phase-to-earth voltages as phase-to-phase Values	
Pickup Thresholds U<, U<<	10.0 V to 125.0 V	Increments 0.1 V
Dropout Ratios DR (only increments U<, U<<)	1.01 to 1.20	Increments 0.01
Time Delays T U<, T U<<	0,00 s to 60.0 s or ∞ (disabled)	Increments 0.01 s
The set times are pure delay times with definite time protection.		

Tripping Times

Pick-up times	50/60 Hz	approx. 30 ms
	16.7 Hz	approx. 70 ms
Dropout times	50/60 Hz	approx. 30 ms
	16.7 Hz	approx. 70 ms

Tolerances

Pickup VoltagesU<, U<<	1 % of setting value, or 0.5 V
Delay Times T	1 % of setting values, or 10 ms

Influencing Variables for Pickup

Power supply direct voltage in range $0.8 \leq U_H/U_{HN} \leq 1.15$	≤ 1 %
Temperature in range $-5\ °C \leq \Theta_{amb} \leq 55\ °C$	≤ 0.5 %/10 K
Frequency in range $0.95 \leq f/f_N \leq 1.05$	≤ 1 %
Harmonics - up to 10 % 3rd harmonic - up to 10 % 5th harmonic	 ≤ 1 % ≤ 1 %

4.15 Overvoltage Protection (ANSI 59)

Setting Ranges / Increments

Pickup Thresholds U<, U<<	30.0 V to 170.0 V	Increments 0.1 V
Dropout Ratios DR (only increments U<, U<<)	0.90 to 0.99	Increments 0.01
Time Delays T U<, T U<<	0,00 s to 60.00 s or ∞ (disabled)	Increments 0.01 s
The set times are pure delay times with definite time protection.		

Times

Pick-up times U>, U>>	50/60 Hz	approx. 30 ms
	16.7 Hz	approx. 70 ms
Dropout TimesU>, U>>	50/60 Hz	approx. 30 ms
	16.7 Hz	approx. 70 ms

Tolerances

Voltage Limits	1 % of setting value, or 0.5 V
Delay Times T	1 % of setting values, or 10 ms

Influencing Variables for Pickup

Power supply direct voltage in range $0.8 \leq U_H/U_{HN} \leq 1{,}15$	≤ 1 %
Temperature in range $-5\ °C \leq \Theta_{amb} \leq 55\ °C$	≤ 0.5 %/10 K
Frequency in range $0.95 \leq f/f_N \leq 1.05$	≤ 1 %
Harmonics - up to 10 % 3rd harmonic - up to 10 % 5th harmonic	 ≤ 1 % ≤ 1 %

4.16 Frequency Protection

Measuring Range of the Frequency Functions

Lower frequency limit	Rated frequency 50/60.7 Hz	approx. 9.25 Hz
Upper frequency limit	Rated frequency 50/60.7 Hz	approx. 70 Hz
	Nominal frequency 16.7 Hz	approx. 23.33 Hz
Minimum positive sequence voltage for frequency measurement (phase-phase voltage)		approx. 8.6 V
Minimum positive sequence voltage for frequency measurement (non-interlinked voltage)		approx. 5 V

Setting Ranges / Increments

Number of frequency elements	4; can be set to f<, f<<, f<<< or f>	
Pickup values f<, f<<, f<<<	Nominal frequency 50 Hz	40.00 to 49.99 Hz or 0 (disabled)
	Nominal frequency 60 Hz	50.00 to 59.99 Hz or 0 (disabled)
	Nominal frequency 16.7 Hz	10.00 to 16.69 Hz or 0 (disabled)
Pickup value f>	Nominal frequency 50 Hz	50.01 to 66.00 Hz or ∞ (disabled)
	Nominal frequency 60 Hz	50.00 to 59.99 Hz or ∞ (disabled)
	Nominal frequency 16.7 Hz	10.00 to 16.69 Hz or ∞ (disabled)
Delay times T f<<	0,00 s to 600.00 s or ∞ (disabled)	Increments 0.01 s
Delay times T f<, T f<<<,T f>	0,00 s to 100.00 s or ∞ (disabled)	Increments 0.01 s
Undervoltage blocking (positive sequence component U_1)	10.0 V to 125.0 V and 0 V [1] (no blocking)	Increments 0.1 V
The set times are pure delay times.		

[1] No pickup is effected below the minimum voltage for frequency measurement

Times

Pickup times f>, f<	50/60 Hz	approx. 100 ms
	16.7 Hz	approx. 300 ms
Dropout times f>, f<	50/60 Hz	approx. 160 ms
	16.7 Hz	approx. 480 ms

Dropout difference

Δf = | Pickup Value – Dropout Value |	approx. 20 mHz

Dropout ratio

Dropout Ratio for Undervoltage Blocking	approx. 1.10

Tolerances

Frequencies f>, f< Undervoltage blocking Delay times T(f<, f<)	10 mHz (at $U = U_N$, $f = f_N$) 1 % of the setting value or 0.5 V 1 % of the setting value or 10 ms

Influencing Variables for Pickup

Power supply direct voltage in range $0.8 \leq U_H/U_{HN} \leq 1.15$	1 %
Temperature in range $-5\ °C \leq \Theta_{amb} \leq 55\ °C$	0.5 %/10 K
Harmonics - up to 10 % 3rd harmonic - up to 10 % 5th harmonic	 1 % 1 %

4.17 Circuit Breaker Failure Protection

Circuit Breaker Supervision

Current flow monitoring	0.04 A to 1.00 A[1)] for the respective side	Steps 0.01 A
Dropout-to-pickup ratio	approx. 0.9 for $I \geq 0.25$ A [1)]	
Tolerance	5 % of set value or 0.01 A [1)]	
Breaker status monitoring	via circuit breaker auxiliary contacts and binary input	
[1)] Secondary values based on I_N = 1 A; for I_N = 5 A the currents must be multiplied by 5.		

Starting Conditions

For breaker failure protection	internal trip external trip (via binary input)

Times

Pickup time for f_N = 50 / 60 Hz	approx. 3 ms with measured quantities, approx. 20 ms after switch-on of measured quantities	
Pickup time for f_N = 16.7 Hz	approx. 60 ms after switch-on of measured quantities	
Dropout time for f_N = 50/60 Hz	approx. 25 ms	
Dropout time for f_N = 16.7 Hz	approx. 75 ms	
Times	0.00 s to 60.00 s; ∞	Steps 0.01
Time tolerance	1 % of set value or 10 ms	

4.18 External Trip Commands

Binary Inputs for Direct Tripping

Number	2	
Operating Time	approx. 12.5 ms min. approx. 25 ms typical	
Dropout time	approx. 25 ms	
Delay time	0.00 s to 60.00 s	Steps 0.01 s
Time tolerance	1 % of set value or 10 ms	
The set times are pure delay times.		

Transformer Annunciations

External annunciations	Buchholz warning Buchholz tank Buchholz tripping

4.19 Monitoring Functions

Measured Quantities

Current symmetry (for each side)	$\|I_{min}\|/\|I_{max}\|$ < BAL. FACT. I M1 provided that I_{max}/I_N > BAL. I LIMIT M1/I_N	
BAL.FAC. I	0.10 to 0.90	Steps 0.01
BAL. I LIMIT	0.10 A to 1.00 A[1)]	Steps 0.01 A
Voltage balance (if voltages applied)	$\|U_{min}\|/\|U_{max}\|$ < BAL. FACTOR U provided that $\|U_{max}\|$ > BALANCE U-LIMIT	
BAL.FACTOR. U	0.58 to 0.90	Increments 0.01
BALANCE I LIMIT	10 V to 100 V	Increments 1 V
Voltage sum (if voltages applied)	$\|\underline{U}_{L1} + \underline{U}_{L2} + \underline{U}_{L3} - k_U \underline{U}_{en}\|$ > 25 V	
Current phase sequence	$\underline{I}_{L1}$ leads $\underline{I}_{L2}$ leads $\underline{I}_{L3}$ if clockwise $\underline{I}_{L1}$ leads $\underline{I}_{L3}$ leads $\underline{I}_{L2}$ if counter-clockwise if $\|\underline{I}_{L1}\|$, $\|\underline{I}_{L2}\|$, $\|\underline{I}_{L3}\|$ > 0.5 I_N	
Voltage phase sequence (if voltages applied)	$\underline{U}_{L1}$ leads $\underline{U}_{L2}$ leads $\underline{U}_{L3}$ if clockwise $\underline{U}_{L1}$ leads $\underline{U}_{L3}$ leads $\underline{U}_{L2}$ if counter-clockwise if $\|\underline{U}_{L1}\|$, $\|\underline{U}_{L2}\|$, $\|\underline{U}_{L3}\|$ > 40 V/$\sqrt{3}$	
Broken wire	unexpected instantaneous current value and current interruption or missing zero crossing	
[1)] Secondary values based on I_N = 1 A; for I_N = 5 A they must be multiplied with 5.		

4.20 User-defined Functions (CFC)

Function Blocks and their Possible Allocation to the Priority Classes

Function Module	Explanation	Task Level			
		MW_BEARB	PLC1_BEARB	PLC_BEARB	SFS_BEARB
ABSVALUE	Magnitude Calculation	X	–	–	–
ADD	Addition	X	X	X	X
ALARM	Alarm clock	X	X	X	X
AND	AND - Gate	X	X	X	X
BLINK	Flash block	X	X	X	X
BOOL_TO_CO	Boolean to Control (conversion)	–	X	X	–
BOOL_TO_DI	Boolean to Double Point (conversion)		X	X	X
BOOL_TO_DL	Boolean to Double Point (conversion)	–	X	X	X
BOOL_TO_IC	Bool to Internal SI, Conversion	–	X	X	X
BUILD_DI	Create Double Point Annunciation	–	X	X	X
CMD_CANCEL	Cancel command	X	X	X	X
CMD_CHAIN	Switching Sequence	–	X	X	–
CMD_INF	Command Information	–	–	–	X
COMPARE	Measured value comparison	X	X	X	X
CONNECT	Connection	–	X	X	X
COUNTER	Counter	X	X	X	X
CV_GET_STATUS	Information status of the metered value, decoder	X	X	X	X
D_FF	D- Flipflop	–	X	X	X
D_FF_MEMO	Status Memory for Restart	X	X	X	X
DI_GET_STATUS	Information status double point indication, decoder	X	X	X	X
DI_SET_STATUS	Double point indication with status, encoder	X	X	X	X
DI_TO_BOOL	Double Point to Boolean (conversion)	–	X	X	X
DINT_TO_REAL	DoubleInt after real, adapter	X	X	X	X
DIST_DECODE	Double point indication with status, decoder	X	X	X	X
DIV	Division	X	X	X	X
DM_DECODE	Decode Double Point	X	X	X	X
DYN_OR	Dynamic OR	X	X	X	X
LIVE_ZERO		X	–	–	–
LONG_TIMER	Timer (max.1193h)	X	X	X	X
LOOP	Feedback Loop	X	X	X	X
LOWER_SETPOINT	Lower Limit	X	–	–	–
MUL	Multiplication	X	X	X	X

MV_GET_STATUS	Information status measured value, decoder	X	X	X	X
MV_SET_STATUS	Measured value with status, encoder	X	X	X	X
NAND	NAND - Gate	X	X	X	X
NEG	Negator	X	X	X	X
NOR	NOR - Gate	X	X	X	X
OR	OR - Gate	X	X	X	X
REAL_TO_DINT	Real after DoubleInt, adapter	X	X	X	X
REAL_TO_UINT	Real after U-Int, adapter	X	X	X	X
RISE_DETECT	Rising edge detector	X	X	X	X
RS_FF	RS- Flipflop	–	X	X	X
RS_FF_MEMO	Status memory for restart	X	X	X	X
SI_GET_STATUS	Information status single point indication, decoder	X	X	X	X
SI_SET_STATUS	Single point indication with status, encoder	X	X	X	X
SQUARE_ROOT	Root Extractor	X	X	X	X
SR_FF	SR- Flipflop	–	X	X	X
SR_FF_MEMO	Status memory for restart	X	X	X	X
ST_AND	AND gate with status	X	X	X	X
ST_NOT	Negator with status	X	X	X	X
ST_OR	OR gate with status	X	X	X	X
SUB	Substraction	X	X	X	X
TIMER	Timer	–	X	X	–
TIMER_SHORT	Simple timer	–	X	X	–
UINT_TO_REAL	U-Int to real, adapter	X	X	X	X
UPPER_SETPOINT	Upper Limit	X	–	–	–
X_OR	XOR - Gate	X	X	X	X
ZERO_POINT	Zero Supression	X	–	–	–

General Limits

Designation	Limit	Comments
Maximum number of all CFC charts considering all task levels	32	When the limit is exceeded, an error message is output by the device. Consequently, the device is put into monitoring mode. The red ERROR-LED lights up.
Maximum number of all CFC charts considering one task level	16	Only Error Message (record in device fault log, evolving fault in processing procedure)
Maximum number of all CFC inputs considering all charts	400	When the limit is exceeded, an error message is output by the device. Consequently, the device is put into monitoring mode. The red ERROR-LED lights up.

Designation	Limit	Comments
Maximum number of inputs of one chart for each task level (number of unequal information items of the left border per task level)	400	Only fault annunciation (record in device fault log); here the number of elements of the left border per task level is counted. Since the same information is indicated at the border several times, only unequal information is to be counted.
Maximum number of reset-resistant flipflops D_FF_MEMO	350	When the limit is exceeded, an error message is output by the device. Consequently, the device is put into monitoring mode. The red ERROR-LED lights up.

Device-specific Limits

Designation	Limit	Comments
Maximum number of synchronous changes of chart inputs per task level	50	When the limit is exceeded, an error message is output by the device. Consequently, the device is put into monitoring mode. The red ERROR-LED lights up.
Maximum number of chart outputs per task level	150	

Additional Limits

Additional Limits [1] for the Following 4 CFC Blocks				
Sequence Level				
	TIMER[2) 3)]	TIMER_SHORT[2) 3)]	CMD_CHAIN	D_FF_MEMO
MW_PROC				350
PLC1_PROC	15	30	20	
PLC_PROC				
SFS_PROC				

1) When the limit is exceeded, an error message is issued by the device. Consequently, the device is put into monitoring mode. The red ERROR-LED lights up.

2) TIMER and TIMER_SHORT share the available timer resources. The relation is TIMER = 2 · system timer and TIMER_SHORT = 1 · system timer. For the maximum used timer number the following side conditions are valid: (2 · number of TIMERs + number of TIMER_SHORTs) < 30. The LONG_TIMER is not subject to this condition.

3) The time values for the blocks TIMER and TIMER_SHORT must not be smaller than the time resolution of the device, i.e. 5 ms, otherwise the blocks will not start with the starting impulse issued.

Maximum number of TICKS in the priority classes

Sequence Level	Limits in TICKS [1]
MW_BEARB (Measured Value Processing)	10000
PLC1_PROC (slow PLC processing)	2000
PLC_PROC (fast PLC processing)	200
SFS_PROC (interlocking)	10000

1) When the sum of TICKS of all blocks exceeds the limits before-mentioned, an error indication is output by CFC.

Processing Times in TICKS required by the Individual Elements

Element		Number of TICKS
Module, basic requirement		5
Each input from the 3rd additional input for generic blocks		1
Connection to an input signal		6
Connection to an output signal		7
Additional for each chart		1
Switching Sequence	CM_CHAIN	34
Status Memory for Restart	D_OFF_MEMO	6
Feedback Loop	LOOP	8
Decode Double Point	DM_DECODE	8
Dynamic OR	D_OR	6
Addition	ADD	26
Substraction	SUB	26
Multiplication	MU	26
Division	IV	54
Root Extractor	SQUARE_ROOT	83

4.21 Flexible Protection Functions

Measured Values / Operating Modes

Measured values	I-measuring point / I-side I1 .. I12 (for busbar 1-ph.) IZ1 .. IZ4 U, P, Q, cos φ, f
Measuring procedure for I-measuring point / I-sides / U	Evaluation of only one phase, fundamental component, positive sequence system, negative sequence system, zero sequence system
Pickup	when threshold is exceeded, when below threshold

Setting Range / Increments

Pickup thresholds				
	Current I-measuring point	for I_N = 1 A	0.05 to 35.00 A	Increment 0.01 A
		for I_N = 5 A	0.25 to 175.00 A	
	Current I-side		0.05 to 35.00 I_N	Increment 0.01 I_N
	Current I1 .. I12	for I_N = 1 A	0.05 to 35.00 A	Increment 0.01 A
		for I_N = 5 A	0.25 to 175.00 A	
		for I_N = 0.1 A	0.005 to 3.500 A	Increment 0.001 A
	Current IZ1 .. IZ4	for I_N = 1 A	0.05 to 35.00 A	Increment 0.01 A
		for I_N = 5 A	0.25 to 175.00 A	
	Current IZ3, .IZ4	for sensitive CT	0.001 to 1.500 A	Increment 0.001 A
	Voltage U, U4		1.0 to 170.0 V	Increment 0.1 V
	Power P	for I_N (meas. pt) = 1 A	1.7 to 3000.0 W	Increment 0.1 W
		for I_N (meas. pt) = 5 A	8.5 to 15,000.0 W	
		for side	0.01 to 17.00 P/SnS	Increment 0.01 P/SnS
	Power Q	for I_N (meas. pt) = 1 A	1.7 to 3000.0 VAR	Increment 0.1 VAR
		for I_N (meas. pt) = 5 A	8.5 to 15,000.0 VAR	
		for side	0.01 to 17.00 Q/SnS	Increment 0.01 Q/SnS
	Power factor cos φ		-0.99 to 0.99	Increment 0.01
	Frequency	for f_N = 50 / 60 Hz	40.00 to 66.00 Hz	Increment 0.01 Hz
		for f_N = 16.7 Hz	10.00 to 22.00 Hz	
Dropout ratio >-stage		except for cos φ, f	0.70 to 0.99	Increment 0.01
Dropout ratio <-stage		except for cos φ, f	1.01 to 3.00	
Dropout difference for cos φ			0,015	
Dropout difference for f			0.02 Hz	
Trigger delay			0.00 to 60.00 s	Increment 0.01 s
Command time delay			0.00.3600.00 s	
Dropout delay			0.00 to 60.00 s	

Operating Times

	f_N = 50/60 Hz	f_N = 16.7 Hz
Pick-up times		
Current	approx. 35 ms	approx. 70 ms
Voltage	approx. 50 ms	approx. 130 ms
Power Measuring procedure high-accuracy Measuring procedure high-speed	 ca. 200 ms ca. 120 ms	 approx. 500 ms approx. 300 ms
Power Factor Measuring procedure high-accuracy Measuring procedure high-speed	 ca. 200 ms ca. 120 ms	 ca. 500 ms ca. 250 ms
Frequency	approx. 200 ms	approx. 500 ms
Dropout times		
Current	<25 ms	<60 ms
Voltage	<50 ms	<110 ms
Power Measuring procedure high-accuracy Measuring procedure high-speed	 <120 ms <100 ms	 <330 ms <300 ms
Power Factor Measuring procedure high-accuracy Measuring procedure high-speed	 <120 ms <100 ms	 <400 ms <250 ms
Frequency	<150 ms	<500 ms

Tolerances

Pickup thresholds	
Current	3 % of setting value or 1 % nominal current
Voltage	1 % of setting value or 0.5 V
Power	0.25 % S_N ±3 % of setting value with high-accuracy measurement 0.5 % S_N±3 % of setting value with high-speed measurement (S_N: rated apparent power)
Power factor	2°
Frequency	10 mHz (bei U = U_N, f = f_N
Times generally	1 % of setting value or 10 ms

Influencing Variables for Pickup

Power supply direct voltage in range $0.8 \leq U_H/U_{HN} \leq 1.15$	1 %
Temperature in range -5 °C $\leq \theta_{amb} \leq$ 55 °C	0.5 %/10 K
Frequency in range $0.95 \leq f/f_N \leq 1.05$	1 %
Harmonics - up to 10 % 3rd harmonic - up to 10 % 5th harmonic	 1 % 1 %

4.22 Additional Functions

Operational Measured Values

Note:
The tolerances stated in the data below refer to one measuring location or one side with 2 measuring locations. All values are ± digit.

Operational measured values for currents 3-phase (for each measuring location)	I_{L1}; I_{L2}; I_{L3} in A primary and secondary	
	– Tolerance with I_N = 1 A or 5 A – Tolerance with I_N = 0.1 A	1 % of the measured value or 1 % of I_N 2 % of the measured value or 2 % of I_N
	$3I_0$; I_1; I_2 in A primary and secondary	
	– Tolerance	2 % of measured value, or 2 % of I_N
	I_{L1}; I_{L2}; I_{L3} in A primary and in % $I_{N\ Side}$	
	– Tolerance with I_N = 1 A or 5 A – Tolerance with I_N = 0.1 A	1 % of the measured value or 1 % of I_N 2 % of the measured value or 2 % of I_N
	$3I_0$; I_1; I_2 in A primary and in % $I_{N\ Side}$	
	– Tolerance	2 % of measured value, or 2 % of I_N
Operational measured values for currents 1-phase	I_1 to I_{12} or I_{Z1} to I_{Z4} in A primary and secondary and in % I_N	
	– Tolerance	2 % of measured value, or 2 % of I_N
	for sensitive current inputs in A primary and mA secondary	
	– Tolerance	1 % of measured value or 2 mA
Phase angle currents 3-phase (for each measuring location)	$\varphi(I_{L1})$; $\varphi(I_{L2})$; $\varphi(I_{L3})$ in ° referred to $\varphi(I_{L1})$	
	– Tolerance	1° at rated current
Phase angle currents 1-phase	$\varphi(I_1)$ to $\varphi(I_{12})$ or $\varphi(I_{Z1})$ to $\varphi(I_{Z4})$ in ° referred to $\varphi(I_1)$	
	– Tolerance	1° at rated current
Operational values for voltages (3-phase, if voltage connected)	U_{L1-E}; U_{L2-E}; U_{L3-E}; U_{L1-L2}; U_{L2-L3}; U_{L3-L1} in kV primary and V secondary and % U_{Nop}	
	– Tolerance	0.2 % of setting value or 0.2 V
	U_1; U_2; U_0 in kV primary and V secondary and % U_{NOp}	
	– Tolerance	0.4 % of setting value or 0.4 V
Operational values for voltages (1-phase, if voltage connected)	U_{EN} or U_4 in kV primary and V secondary and % U_{Nop}	
	– Tolerance	0.2 % of setting value or 0.2 V
Phase angle of voltages (3-phase, if voltage connected)	$\varphi(U_{L1-E})$; $\varphi(U_{L2-E})$; $\varphi(U_{L3-E})$ in ° referred to $\varphi(I_1)$	
	– Tolerance	1 ° at rated voltage
Phase angle of voltages (1-phase, if voltage connected)	$\varphi(U_{EN})$ or $\varphi(U_4)$ in ° referred to $\varphi(I_1)$	
	– Tolerance	1 ° at rated voltage
Overexcitation Factor	$(U/f) / (U_N/f_N)$	
	– Tolerance	2 % of measured value
Operational measured values of frequency Frequency	f in Hz and % f_N	
Range	10 Hz to 75 Hz	
	– Tolerance	1 % in range f_N ± 10 % at $I = I_N$

Operational values for power (3-phase, if voltage connected)	Active power P; reactive power Q; apparent power S in kW; MW; kVA; MVA primary	
	– Tolerance	1.2 % of measured value, or 0.25 % of S_N
Operational measured values for power (1–phase, with measured or rated voltage)	S (apparent power) in kVA; MVA primary	
Operational values for power factor (3-phase, if voltage connected)	cos φ	
Operational measured values for thermal value (overload protection acc. to IEC 60255-8)	Θ_{L1}; Θ_{L2}; Θ_{L3}; Θ_{res} referred to tripping temperature rise θ_{trip}	
Operational measured values for thermal value (overload protection acc. to IEC 60354)	Θ_{RTD1} to Θ_{RTD12} in °C or °F relative ageing rate, load reserve	
Tolerances are based on the preset matching parameters. Higher tolerances are to be expected for calculated values dependent on the matching factors for currents and voltages.		
Measured values of differential protection	I_{diffL1}; I_{diffL2}; I_{diffL3}; I_{restL1}; I_{restL2}; I_{restL3}; in % of the operational nominal current	
	– Tolerance (with preset values) (for 2 sides with 1 measuring location each)	2 % of measured value, or 2 % I_N (50/60 Hz) 3 % of measured value, or. 3 % I_N (16.7 Hz)
Measured values of restricted earth fault protection	$I_{diffREF}$; $I_{restREF}$ in % of the operational nominal current	
	– Tolerance (with preset values) (for 1 side or 1 measuring location)	2 % of measured value, or 2 % I_N (50/60 Hz) 3 % of measured value, or. 3 % I_N (16.7 Hz)
Tolerances are based on the preset matching parameters for a protected object with 2 sides and 1 measuring location on each side. Higher tolerances are to be expected for calculated values dependent on the matching factors for currents and the number of measuring locations.		

Fault Logging

Storage of the messages of the last 8 faults	with a total of max. 200 messages

Fault Recording

Number of stored fault records	max. 8
Storage period per fault record	Approx. 5 s per fault at 50/60 Hz, approx. 5 s total sum approx. 18 s per fault at 16.7 Hz, approx. 18 s total sum
Sampling rate at f_N = 50 Hz Sampling rate at f_N = 60 Hz Sampling rate at f_N = 16.7 Hz	1.25 ms 1.04 ms 3.75 ms

Statistic Values

Number of trip events caused by the device	
Total of interrupted currents	segregated for each pole and each side
Operating hours meter criterion	up to 7 digits Exceeding of settable Current threshold

Long-Term Average Values

Time Window	5, 15, 30 or 60 minutes
Frequency of Updates	adjustable
Long-Term Averages	
currents active power reactive power apparent power	I_{L1dmd}; I_{L2dmd}; I_{L3dmd}; I_{1dmd} in A (kA) P_{dmd} in W (kW, MW) Q_{dmd} in VAr (kVAr, MVAr) S_{dmd} in VAr (kVAr, MVAr)

Minimum Values, Maximum Values

Storage of Measured Values	With date and time
Reset automatic	Time of day adjustable (in minutes, 0 to 1439 min) time frame and starting time adjustable (in days, 1 to 365 days, and ∞) (in days, 1 to 365 and ∞)
Manual Reset	Using binary input Using keypad Using communication
Min/Max Values for Currents	I_{L1}; I_{L2}; I_{L3}; I_1 (positive sequence component)
Min/Max Values for Voltages	U_{L1-E}; U_{L2-E}; U_{L3-E}; U_1 (positive sequence component); U_{L1-L2}; U_{L2-L3}; U_{L3-L1}
Min/Max Values for Power	S, P; Q, cos φ; frequency
Min/Max Values for Overload Protection	Θ/Θ_{from}
Min/Max Values for Mean Values	I_{L1dmd}; I_{L2dmd}; I_{L3dmd}; I_{1dmd} (positive sequence component); S_{dmd}; P_{dmd}; Q_{dmd}

Real Time Clock and Buffer Battery

Resolution for operational messages	1 ms
Resolution for fault messages	1 ms
Back-up Battery	Lithium battery 3 V/1 Ah, type CR 1/2 AA self-discharging time approx. 10 years

Time Synchronisation

Internal	Internal using RTC (default)
IEC 60870-5-103	External using system interface
IEC 61850	External synchronisation via the system interface (IEC 61850)
Time signal IRIG B	External via IRIG B (telegram format IRIG-B800)
Time signal DCF 77	External via time signal DCF 77
Time signal synchro-box	External using time signal SIMEAS Sync. box
Pulse via binary input	External with impulse via binary input

Commissioning Aids

Operational measured values Circuit breaker test

Energy Meter

Four-Quadrant Meter	W_{P+}, W_{P-}, W_{Q+}, W_{Q-}
Tolerance	1 %

Operating Hours Counter

Display Range	up to 6 digits
Criterion	Overshoot of an adjustable current threshold (CB I>)

Trip Circuit Supervision

Number of monitorable circuits	1 with one or two binary inputs

4.23 Dimensions

4.23.1 Panel Surface Mounting (Enclosure Size $^1/_2$)

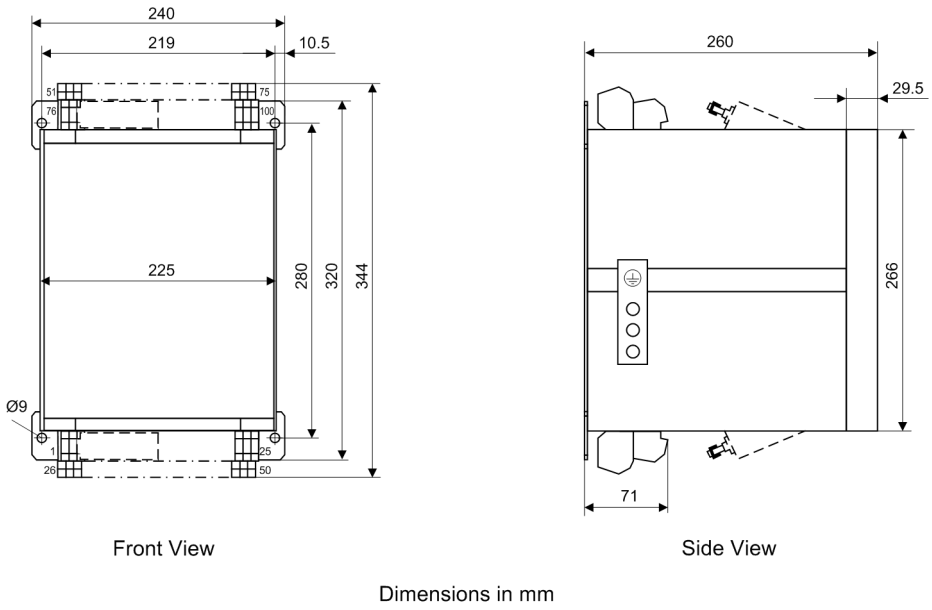

Figure 4-20 Dimensional drawing of a 7UT613 for panel flush mounting (housing size $^1/_2$)

4.23.2 Panel Surface Mounting (Enclosure Size $^1/_1$)

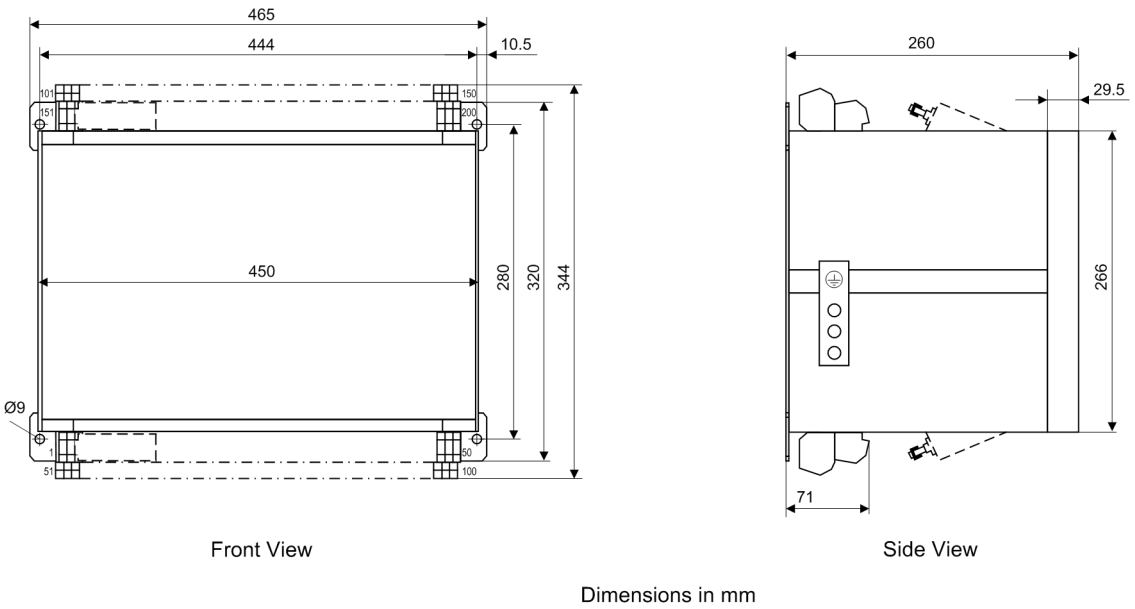

Figure 4-21 Dimensional drawing of a 7UT633 or 7UT635 for panel flush mounting (housing size $^1/_1$)

4.23.3 Panel Surface and Cabinet Mounting (Enclosure Size $^1/_2$)

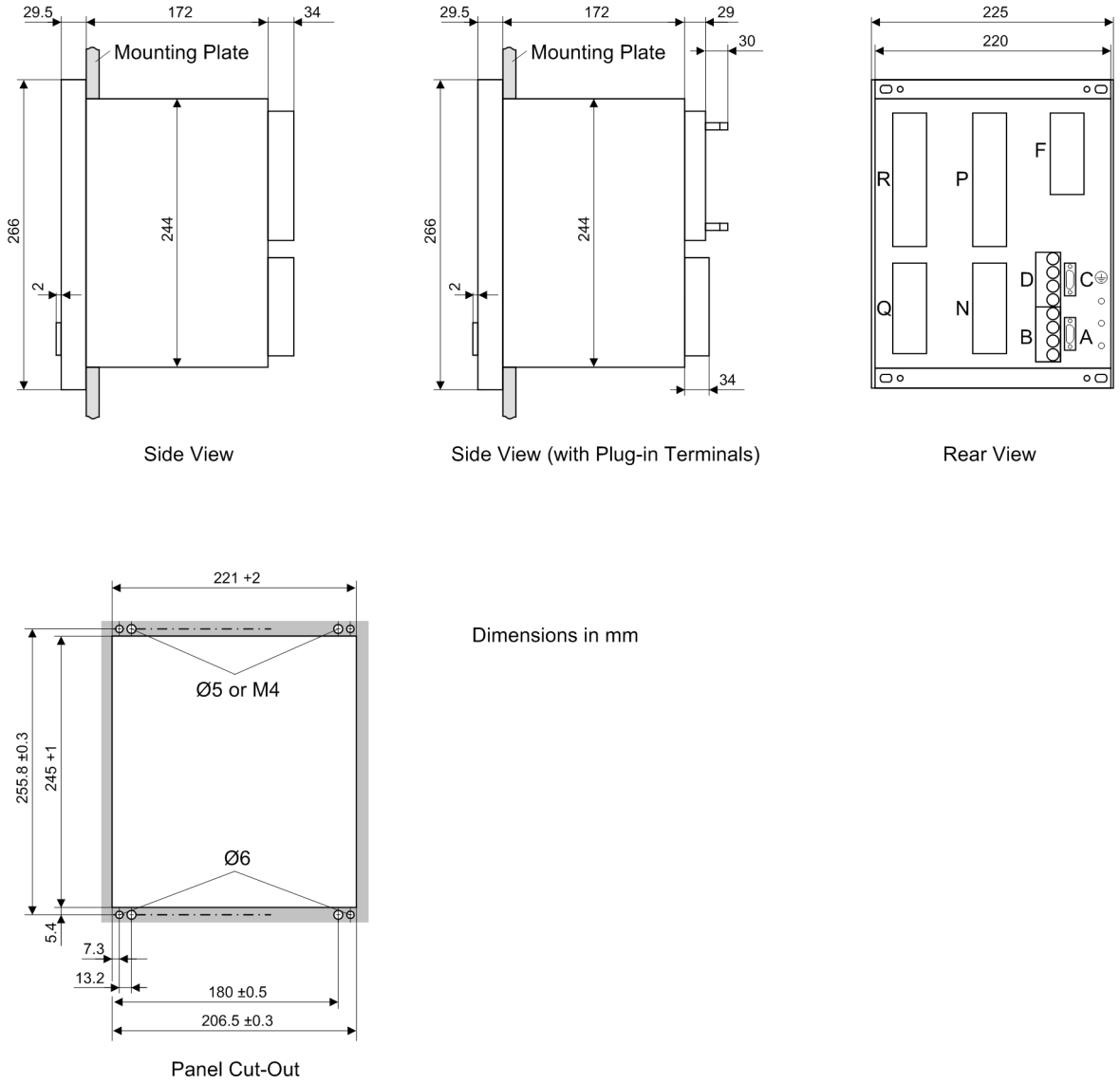

Figure 4-22 Dimensions of a 7UT613 for panel flush mounting or cubicle mounting (housing size $^1/_2$)

4.23.4 Panel Surface and Cabinet Mounting (Enclosure Size $^1/_1$)

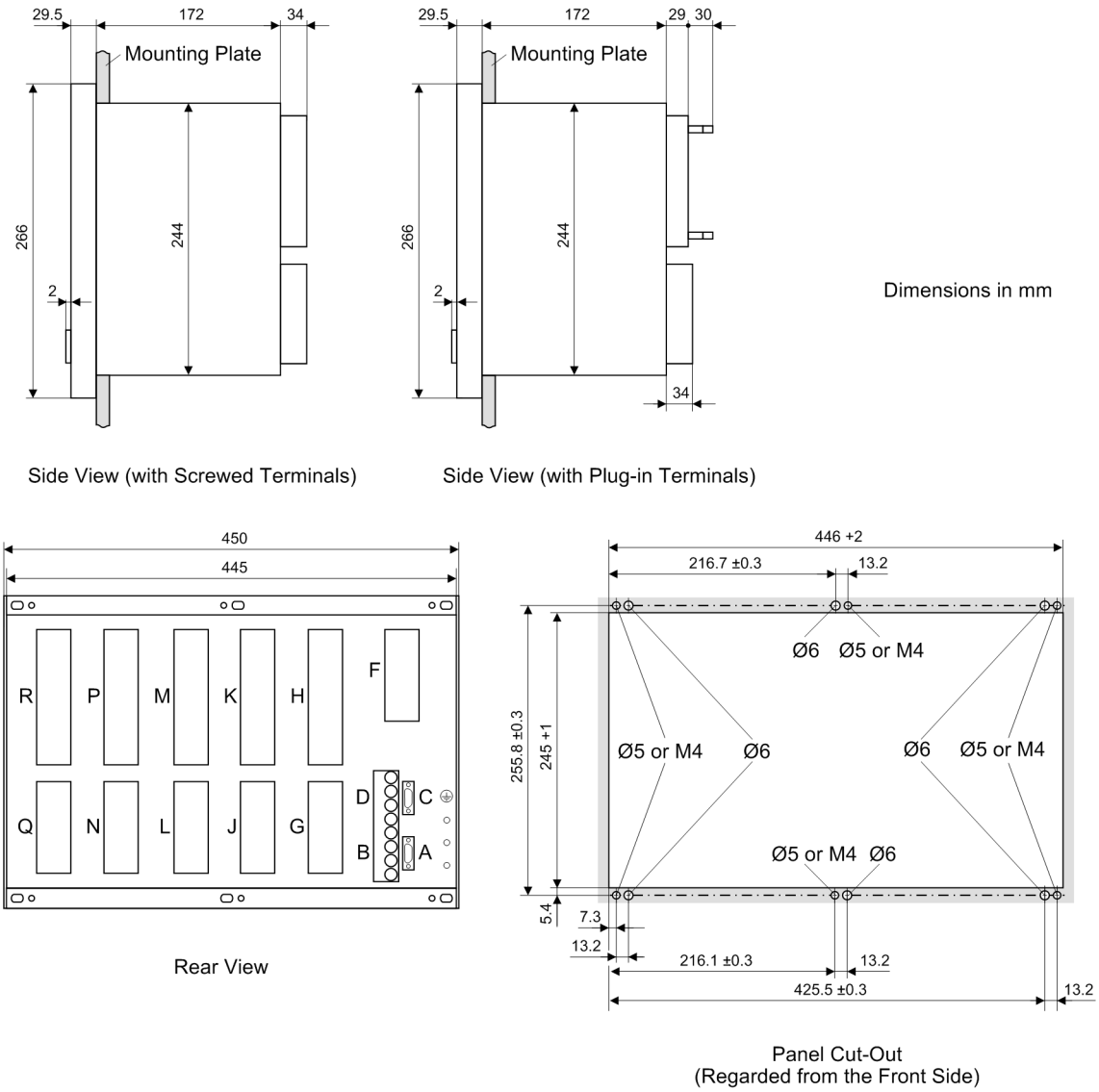

Figure 4-23 Dimensions of a 7UT6 (maximum functional scope) for panel flush mounting or cubicle mounting (housing size $^1/_1$)

4.23.5 RTD box

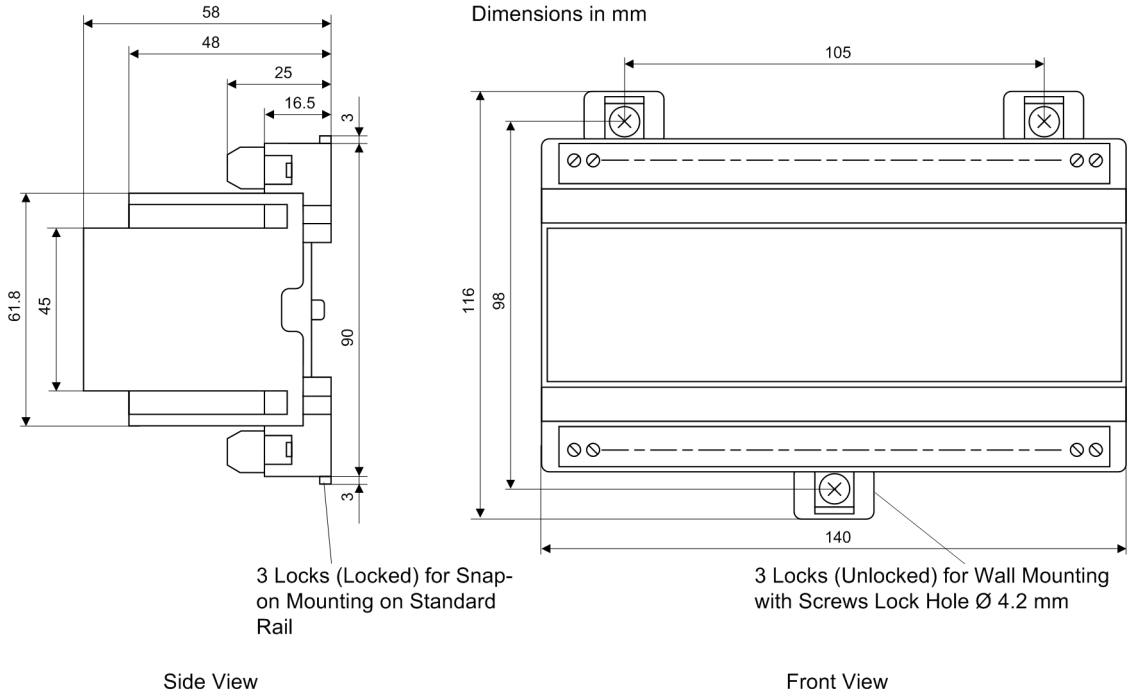

Figure 4-24 Dimensions of the Remote Temperature Detection Unit 7XV5662–*AD10–0000

■

Appendix A

This appendix is primarily a reference for the experienced user. This section provides ordering information for the models of this device. Connection diagrams for indicating the terminal connections of the models of this device are included. Following the general diagrams are diagrams that show the proper connections of the devices to primary equipment in many typical power system configurations. Tables with all settings and all information available in this device equipped with all options are provided. Default settings are also given.

A.1	Ordering Information and Accessories	496
A.2	Terminal Assignments	505
A.3	Connection Examples	523
A.4	Current Transformer Requirements	539
A.5	Default Settings	543
A.6	Protocol-dependent Functions	548
A.7	Functional Scope	549
A.8	Settings	552
A.9	Information List	582
A.10	Group Alarms	615
A.11	Measured Values	617

A.1 Ordering Information and Accessories

A.1.1 Ordering Information

A.1.1.1 Differential Protection 7UT613 for 3 Measuring Locations

							7		8	9	10	11	12		13	14	15						
Differential Protection	7	U	T	6	1	3		—						—				0	+	L/M			

Equipment	Pos. 7
Nominal current I_N = 1 A	1
Nominal current I_N = 5 A	5

Auxiliary voltage (power supply, pickup threshold of binary inputs)	Pos. 8
DC 24 V to 48 V, binary input threshold 17 V [2]	2
60 to 125 VDC [1], binary input threshold 17 V [2]	4
110 to 250 VDC [1], 115 to 230 VAC, binary input threshold 73 V [2]	5
220 to 250 VDC [1], 115 to 230 VAC, Binary Input Threshold 154 V [1] [2]	6

[1] One of the 2 voltage ranges can be selected with plug-in jumper

[2] For each binary input one of 2 pick-up threshold ranges can be selected with plug-in jumper

Construction: Housing, Number of Binary Inputs and Outputs BI: Binary Inputs, BO: Output Relays	Pos. 9
Surface mounting housing with two-tier terminals, $^1/_2$ x 19", 5 BI, 8 BO, 1 live status contact	B
Flush mounting housing, $^1/_2$ x 19", with plug-in terminals, 5 BI, 8 BO, 1 live status contact	D
Flush mounting housing with screwed terminals, $^1/_2$ x 19", 5 BI, 8 BO, 1 live status contact	E

Region-specific default / language settings and function versions	Pos. 10
Region world, German language (language can be changed)	A
Region world, English language (GB) (language can be changed)	B
Region world, American language (language can be changed)	C
Region world, French language (language can be changed)	D
Region world, Spanish language (language can be changed)	E

System Interfaces (rear side, port B)	Pos. 11
No system interface	0
IEC 60870-5-103 protocol, electrical RS232	1
IEC 60870-5-103 protocol, electrical RS485	2
IEC 60870-5-103 protocol, optical 820 nm, ST connector	3
Profibus FMS Slave, electrical RS485	4
Profibus FMS slave, optical, single ring, ST connector [1)]	5
Profibus FMS slave, optical, double ring, ST connector [1)]	6
For more interface options see Additional Specification **L**	9

[1)] Not possible with surface mounting housing (position 9 = B). For the surface mounted version, please order a device with the appropriate electrical RS485 interface and accessories in accordance with A.1 under „External Converters“

Additional Specification L for Further System Interfaces (device rear port B) (only if Pos. 11 = 9)	Pos. 21	Pos. 22
PROFIBUS DP Slave, RS485	0	A
Profibus DP Slave, optical 820 nm, double ring, ST connector [1)]	0	B
Modbus, RS485	0	D
Modbus, 820 nm, optical, ST connector [2)]	0	E
DNP3.0, RS485	0	G
DNP3.0, optical, 820 nm, ST connector [2)]	0	H
IEC 61850, 100 Mbit Ethernet, double electrical, RJ 45-connector	0	R
IEC 61850, 100 Mbit Ethernet, optical, ST-connector [2)]	0	S

[1)] Not possible with surface mounting housing (position 9 = B). For the surface mounted version, please order a device with the appropriate electrical RS485 interface and accessories in accordance with A.1 under „External Converters“

[2)] Cannot be delivered in connection with 9th digit = B.

Function Interface (rear side, port C)	Pos. 12
DIGSI / Modem / Browser, electrical RS232	1
DIGSI / Modem / Browser / RTD-box, electrical RS485	2
For further interface options see Additional Specification **M**	9

Additional Specification M for Further Function Interfaces (device rear port C and D) (only if pos. 12 = 9)	Pos. 23	Pos. 24
Port C: DIGSI / Modem / Browser, electrical RS232	1	
Port C: DIGSI / Modem / Browser / RTD-box, electrical RS485	2	
Port D: RTD-box, 820 nm, optical, ST connector[1)]		A
Port D: RTD-Box, electrical RS485		F

[1)] In case of a connection to a RTD box 7XV5662-xAD10, a RS485-LWL converter 7XV5650-0xA00 is required.

Measurement Function	Pos. 13
Basic measured values	1
Minimum and Maximum Values:	2
Basic measured values, average values, min/max values, transformer monitoring functions (connection to RTD box/hot-spot, overload factor) [1]	4

[1] Only in connection with position 12 = 2 or 9 and Mxx (supplementary)

Differential Protection	Pos. 14
Differential Protection + Basic Functions [1] Differential protection transformer, generator, motor, busbar Overload protection in accordance with IEC 60354 for a winding [2] Lock out Time overcurrent protection, phases: I>, I>>, Ip (inrush restraint) overcurrent protection 3I0: 3I0>, 3I0>>, 3I0p (inrush restraint) overcurrent protection earth: IE>, IE>>, IEp (inrush restraint)	A
Differential protection + Basic elements + Ancillary functions Restricted earth fault protection Definite-time, single-phase, e.g. high-impedance earth fault protection (87G without resistor or varistor) [3] or tank leakage protection Unbalanced load protection (46) Breaker failure protection (50BF) Trip circuit supervision (74TC)	B
Path protection, 16.7 Hz [4]	C

[1] Varistor and series resistor are accessories

[2] external RTD box required

[3] external resistor and varistor required

[4] Only in connection with position 16 = 1 or 3

Ancillary Voltage Function	Pos. 15
Without voltage function	A
With overexcitation (Volt/Hertz) protection (24) and voltage/power measurement	B
Over- and undervoltage protection, frequency protection, load direction protection, fuse-failure monitor	C

Additional function general	Pos. 16
without	0
multiple protection function [1]	1
unassigned configurable protection blocks	2
multiple protection function + unassigned configurable protection blocks [1]	3

[1] Only if already available at position 14.

A.1.1.2 Differential Protection 7UT633 and 7UT635 for 3 to 5 measuring locations

						7			8	9	10	11	12		13	14	15			
Differential Protection	7	U	T	6	3			—						—				0	+	L/M

Inputs and outputs Housing, number of binary inputs and outputs BI: Binary inputs, BO: Output relays	Pos. 6
12 current inputs (3 x 3–phase, + 3 x 1–phase) 4 voltage inputs (1 x 3–phase, +1 x 1–phase) Housing $^1/_1$ x 19”, 21 BI, 24 BO, 1 live status contact	3
16 current inputs (5 x 3–phase, + 1 x 1–phase) or (4 x 3–phase, + 4 x 1–phase) Housing $^1/_1$ x 19”, 29 BI, 24 BO, 1 life contact	5

Equipment	Pos. 7
Nominal current I_N = 1 A	1
Nominal current I_N = 5 A	5

Auxiliary voltage (power supply, pickup threshold of binary inputs)	Pos. 8
DC 24 V to 48 V, binary input threshold 17 V [2)]	2
60 to 125 VDC [1)], binary input threshold 17 V [2)]	4
110 to 250 VDC [1)], 115 to 230 VAC, binary input threshold 73 V [2)]	5
220 to 250 VDC [1)], 115 to 230 VAC, binary input threshold 154 V [2)]	6

[1)] One of the 2 voltage ranges can be selected with plug-in jumper

[2)] For each binary input one of 2 pick-up threshold ranges can be selected with plug-in jumper

Construction	Pos. 9
Surface mounting housing with two-tier terminals	B
Flush mounting housing with plug-in terminals	D
In housing with screw terminals	E
as B, with 5 relays as „High-speed Relays“	N
as D, with 5 relays as „High-speed Relays“	B
as E, with 5 relays as „High-speed Relays“	S

Region-specific default / language settings and function versions	Pos. 10
Region world, German language (language can be changed)	A
Region world, English language (GB) (language can be changed)	B
Region world, American language (language can be changed)	C
Region world, French language (language can be changed)	D
Region world, Spanish language (language can be changed)	E

System Interfaces (rear side, port B)	Pos. 11
IEC 60870-5-103 protocol, electrical RS232	1
IEC 60870-5-103 protocol, electrical RS485	2
IEC 60870-5-103 protocol, optical 820 nm, ST connector	3
Profibus FMS Slave, electrical RS485	4
Profibus FMS slave, optical, single ring, ST connector [1)]	5
Profibus FMS slave, optical, double ring, ST connector [1)]	6
For more interface options see Additional Specification **L**	9

1) Not possible with surface mounting housing (position 9 = B). For the surface mounted version, please order a device with the appropriate electrical RS485 interface and accessories in accordance with A.1 under „External Converters“

Additional Specification L for Further System Interfaces (device rear port B) (only if Pos. 11 = 9)	Pos. 21	Pos. 22
PROFIBUS DP Slave, RS485	0	A
Profibus DP slave, optical 820 nm, double ring, ST connector [1)]	0	B
Modbus, RS485	0	D
Modbus, 820 nm, optical, ST connector [2)]	0	E
DNP3.0, RS485	0	G
DNP3.0, optical, 820 nm, ST connector [2)]	0	H
IEC 61,850, 100 Mbit Ethernet, double electrical, RJ 45-connector	0	R
IEC 61,850, 100 Mbit Ethernet, optical, ST-connector [2)]	0	S

1) Not possible with surface mounting housing (position 9 = B). For the surface mounted version, please order a device with the appropriate electrical RS485 interface and accessories in accordance with A.1 under „External Converters“

2) Cannot be delivered in connection with 9th digit = B.

Function Interface (rear side, port C)	Pos. 12
DIGSI / Modem / Browser, electrical RS232	1
DIGSI / Modem / Browser / RTD-box, electrical RS485	2
For further interface options see Additional Specification **M**	9

Additional Specification M for Further Function Interfaces (device rear port C and D) (only if Pos. 12 = 9)	Pos. 23	Pos. 24
Port C: DIGSI / Modem / Browser, electrical RS232	1	
Port C: DIGSI / Modem / Browser / RTD-box, electrical RS485	2	
Port D: RTD box, 820 nm, optical, ST connector[1)]		A
Port D: RTD-Box, electrical RS485		F

1) In case of a connection to a RTD box 7XV5662-xAD10, a RS485-LWL converter 7XV5650-0xA00 is required.

Measurement Function	Pos. 13
Basic measured values	1
Minimum and Maximum Values:	2
Basic measured values, average values, min/max values, transformer monitoring functions (connection to RTD box/hot-spot, overload factor) [1]	4

[1] Only in connection with position 12 = 2 or 9 and Mxx (supplementary)

Differential Protection	Pos. 14
Differential protection + Basic elements Differential protection transformer, generator, motor, busbar Overload protection in accordance with IEC 60354 for a winding[2] Lock out Time overcurrent protection, phases: I>, I>>, Ip (inrush restraint) overcurrent protection 3I0: 3I0>, 3I0>>, 3I0p (inrush restraint) overcurrent protection earth: IE>, IE>>, IEp (inrush restraint)	A
Differential Protection + Basic Functions + Additional Functions[1] Restricted earth fault protection Definite-time, single-phase, e.g. high-impedance earth fault protection (87G without resistor or varistor) [3], or tank leakage protection Unbalanced load protection (46) Breaker failure protection (50BF) Trip circuit supervision (74TC)	B
Path protection, 16.7 Hz [4]	C

[1] Varistor and series resistor are accessories
[2] external RTD box required
[3] external resistor and varistor required
[4] Only in connection with position 16 = 1 or 3

Ancillary Voltage Function	Pos. 15
Without voltage function	A
with overexcitation (Volt/Hertz) protection (24) and voltage/power measurement (only available for 7UT633)	B
Over- and undervoltage protection, frequency protection, load direction protection, fuse-failure monitor (only available for 7UT633)	C

Additional function general	Pos. 16
without	0
multiple protection function [1]	1
unassigned configurable protection blocks	2
multiple protection function + unassigned configurable protection blocks [1]	3

[1] Only if already available at position 14.

A.1.2 Accessories

RTD box (temperature detection unit)

up to 6 temperature measuring points (max. 2 boxes can be connected to the 7UT613/63x)

Name	Order Number
RTD-box, U_H = 24 to 60 V AC/DC	7XV5662–2AD10
RTD-box, U_H = 90 to 240 V AC/DC	7XV5662–5AD10

Matching and Summation Current Transformers

For single-phase busbar protection

Name	Order Number
Matching/summation current transformer I_N = 1A	4AM5120-3DA00-0AN2
Matching/summation current transformer I_N = 5 A	4AM5120-4DA00-0AN2

External Converters

Profibus, Modbus and DNP 3.0 are not possible with surface mounting housings. Please order in this case a device with the appropriate electrical RS485 interface, and the additional converters listed below.

Desired interface; order device with	Additional accessories
Profibus FMS single ring; Profibus FMS RS485	6GK1502-3AB10; 7XV5810-0BA00
Profibus FMS double ring; Profibus FMS RS485	6GK1502-4AB10; 7XV5810-0BA00
Profibus DP double ring; Profibus DP RS485	6GK1502-3AB10; 7XV5810-0BA00
Modbus 820 nm; Modbus RS485	7XV5650-0BA00
DNP3.0 820 nm; DNP3.0 RS 485	7XV5650–0BA00

Exchangeable Interface Modules

Name	Order Number
RS232	C53207-A351-D641-1
RS485	C53207-A351-D642-1
Optical 820 nm	C53207-A351-D643-1
Profibus FMS RS485	C53207-A351-D603-1
Profibus FMS double ring	C53207-A351-D606-1
Profibus FMS single ring	C53207-A351-D609-1
Profibus DP RS485	C53207-A351-D611-1
Profibus DP double ring	C53207-A351-D613-3
Modbus RS485	C53207-A351-D621-1
Modbus 820 nm	C53207-A351-D623-1
DNP 3.0 RS485	C53207-A351-D631-3
DNP 3.0 820 nm	C53207-A351-D633-1
Ethernet electrical (EN100)	C53207-A351-D675-1
Ethernet optical (EN100)	C53207-A322-B150-1

Terminal Block Covering Caps

Block type	Order Number
18 terminal voltage or 12 terminal current block	C73334-A1-C31-1
12 terminal voltage or 8 terminal current block	C73334-A1-C32-1

Short-circuit links

Short-circuit links as jumper kit	Order Number
3 pcs for current terminals + 6 pcs for voltage terminals	C73334-A1-C40-1

Plug-in Socket Boxes

Terminal type	Order Number
2 terminal	C73334-A1-C35-1
3 terminal	C73334-A1-C36-1

A pair of mounting rails; one for top, one for bottom

Name	Order Number
2 mounting rails	C73165-A63-D200-1

Backup Battery

Lithium battery 3 V/1 Ah, type CR 1/2 AA

Name	Order Number
VARTA	6127 101 501

Interface cable

Interface cable between PC and SIPROTEC device

Name	Order Number
Cable with 9-pole male/female connector	7XV5100-4

Operating Software DIGSI 4

Protection operating and configuration software DIGSI 4

Name	Order Number
DIGSI 4, basic version with license for 10 computers	7XS5400-0AA00
DIGSI 4, complete version with all option packages	7XS5402-0AA00

Graphical Analysis Program SIGRA

Software for graphical visualization, analysis, and evaluation of fault data (option package of the complete version of DIGSI 4)

Name	Order Number
SIGRA; Full version with license for 10 computers	7XS5410-0AA00

Graphic Tools

Graphical software to aid in the setting of characteristic curves (option package of the complete version of DIGSI 4)

Name	Order Number
Graphic Tools 4; Full version with license for 10 computers	7XS5430-0AA00

DIGSI REMOTE 4

Name	Order Number
Software for remotely operating protective devices via a modem (and possibly a star coupler) using DIGSI 4 (option package of the complete version of DIGSI 4)	7XS5440-1AA00

SIMATIC CFC 4

Name	Order Number
Graphical software for setting interlocking (latching) control conditions and creating additional functions (option package of the complete version of DIGSI 4)	7XS5450-0AA00

Varistor

For voltage limitation in the high-impedance unit protection function

Data; name	Order Number
125 Vrms, 600 A; 1S/S256	C53207-A401-D76-1
240 Vrms, 600 A; 1S/S1088	C53207-A401-D77-1

A.2 Terminal Assignments

A.2.1 Panel Flush and Cubicle Mounting

7UT613*-*D/E

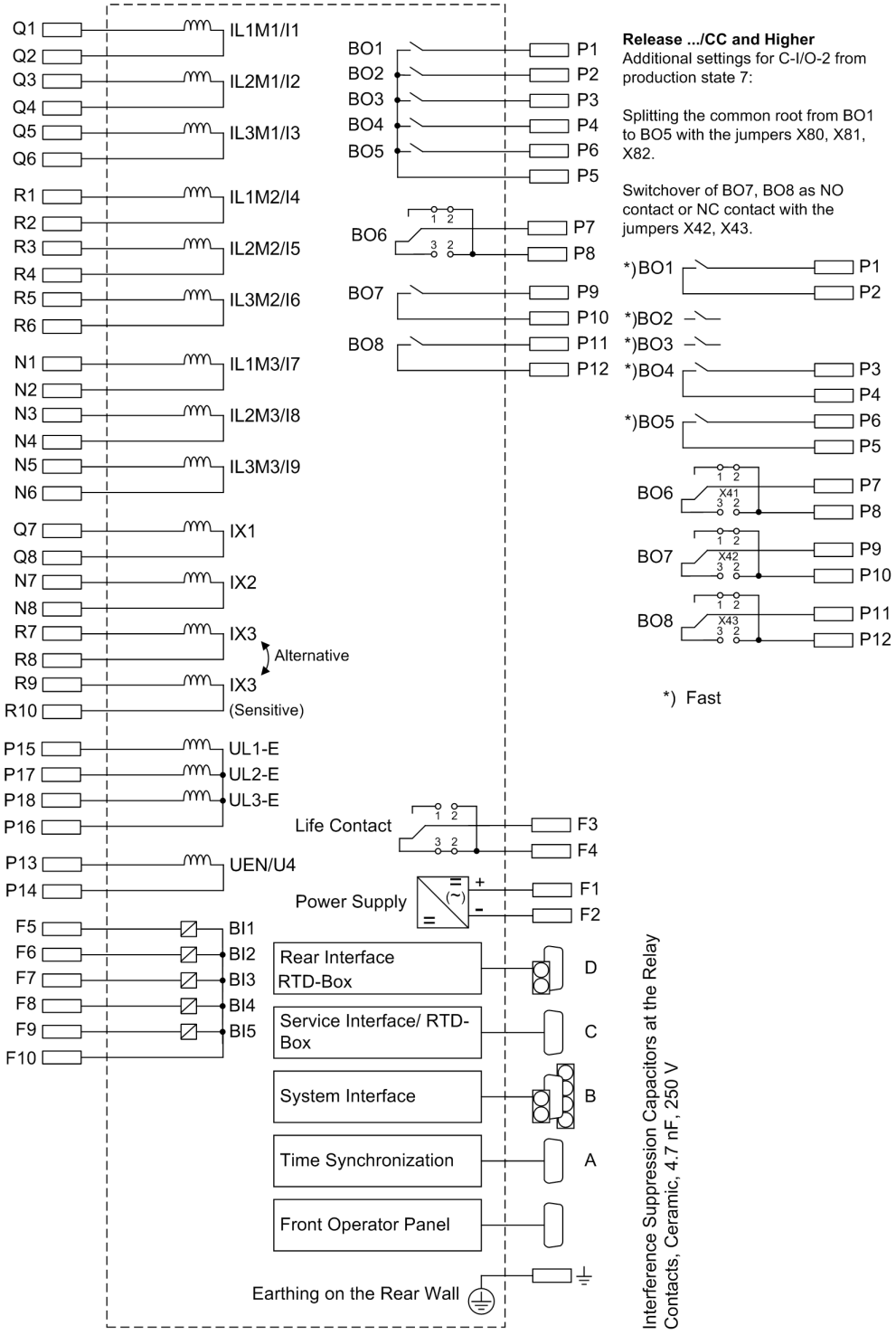

Figure A-1 Overview diagram 7UT613 (panel flush and cubicle mounting)

7UT633*-* D/E

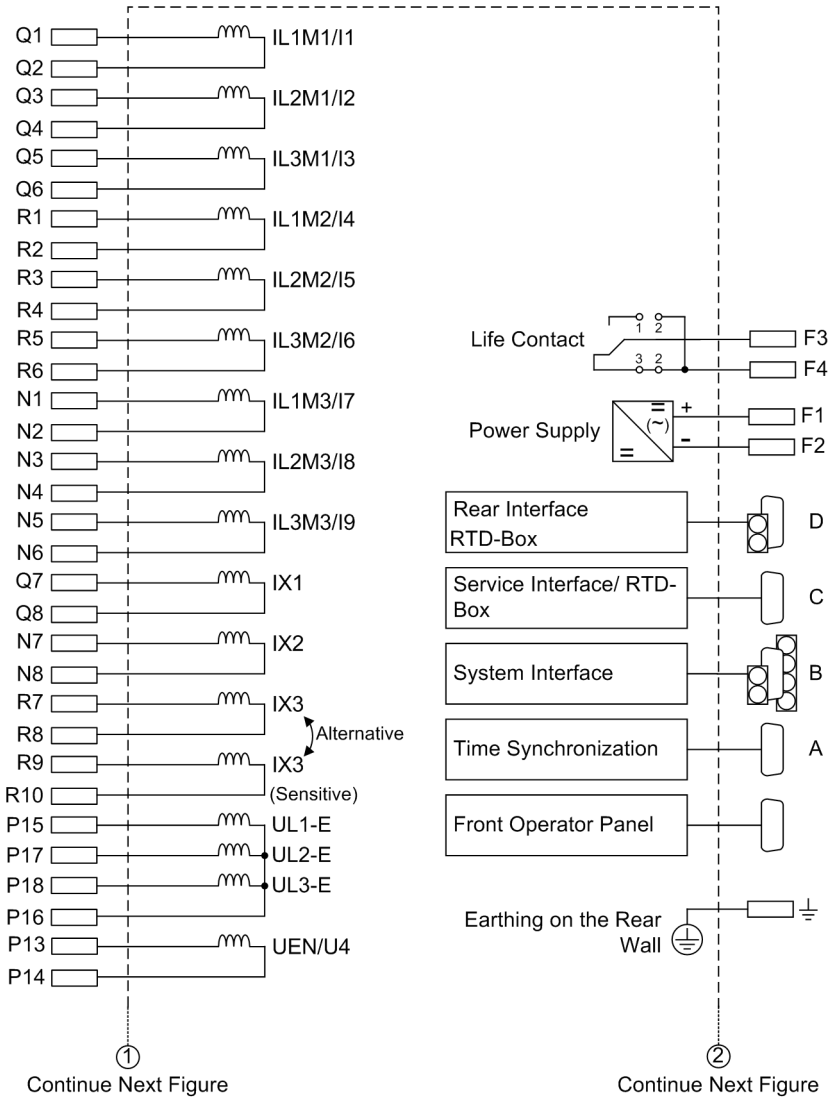
Q1
Q2
Q3
Q4
Q5
Q6
R1
R2
R3
R4
R5
R6
N1
N2
N3
N4
N5
N6
Q7
Q8
N7
N8
R7
R8
R9
R10
P15
P17
P18
P16
P13
P14
IL1M1/I1
IL2M1/I2
IL3M1/I3
IL1M2/I4
IL2M2/I5
IL3M2/I6
IL1M3/I7
IL2M3/I8
IL3M3/I9
IX1
IX2
IX3
Alternative
IX3
(Sensitive)
UL1-E
UL2-E
UL3-E
UEN/U4
Life Contact
1 2
3 2
F3
F4
Power Supply
+
-
F1
F2
Rear Interface
RTD-Box
D
Service Interface/ RTD-
Box
C
System Interface
B
Time Synchronization
A
Front Operator Panel
Earthing on the Rear
Wall
1
Continue Next Figure
2
Continue Next Figure

7UT633*-* D/E

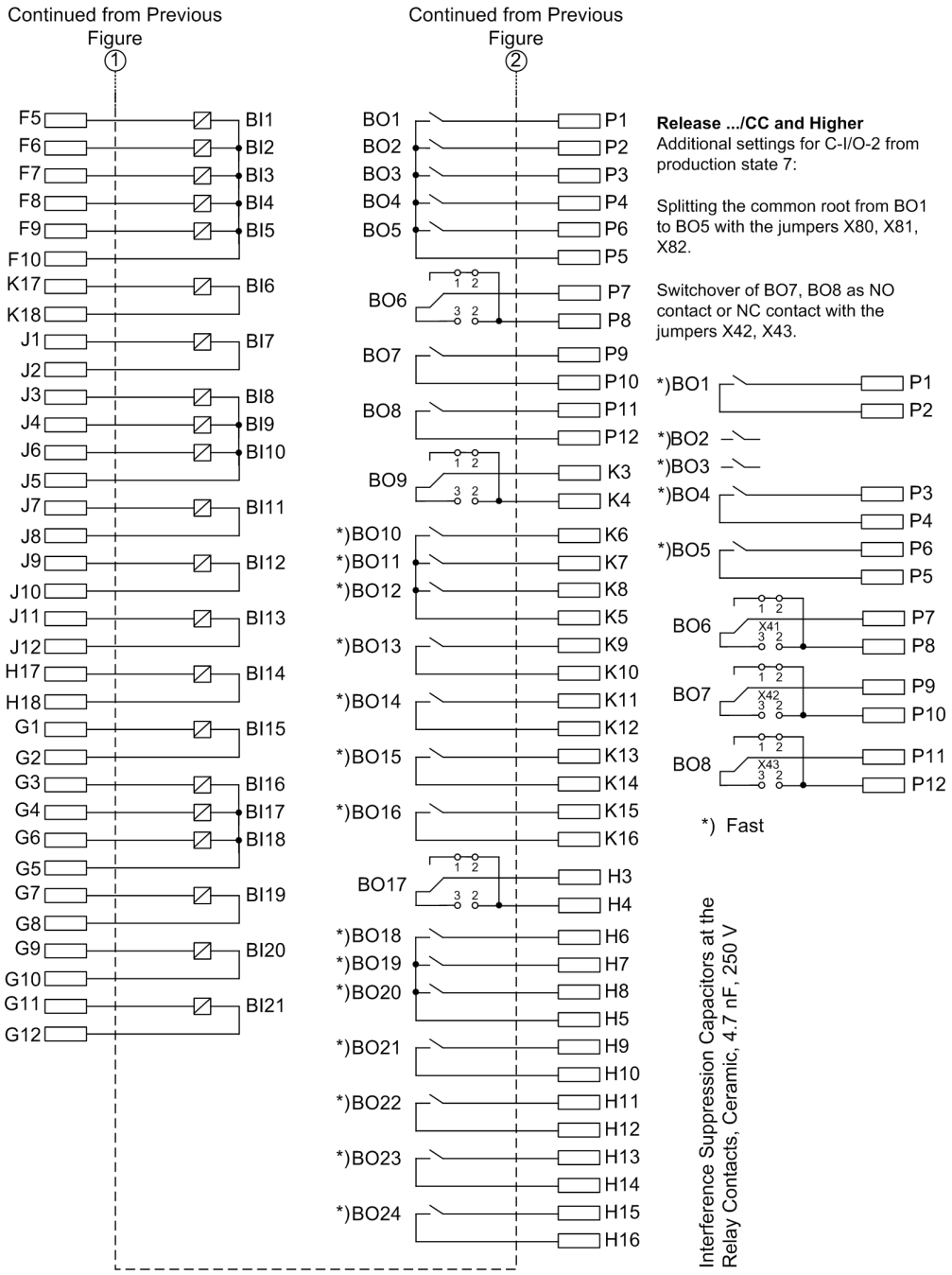

Figure A-2 General diagram 7UT633 (panel flush and cubicle mounting)

7UT633*-* P/Q

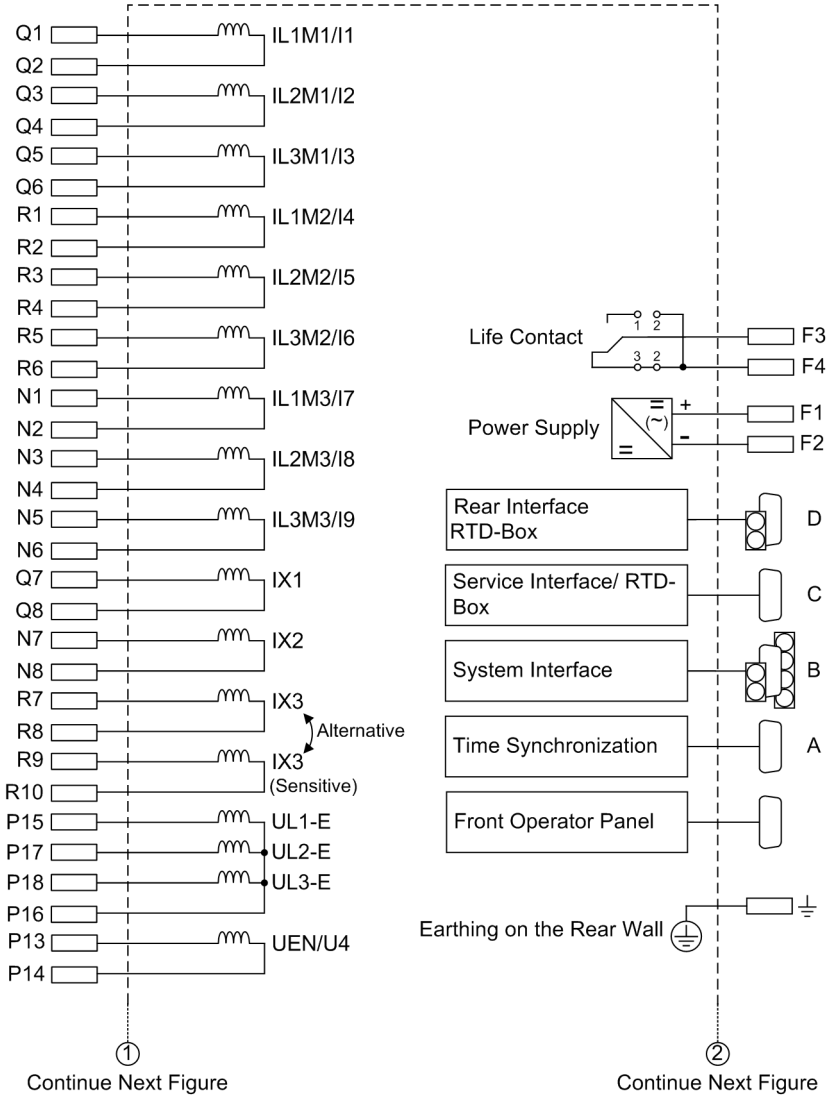
Q1
Q2
Q3
Q4
Q5
Q6
R1
R2
R3
R4
R5
R6
N1
N2
N3
N4
N5
N6
Q7
Q8
N7
N8
R7
R8
R9
R10
P15
P17
P18
P16
P13
P14
IL1M1/I1
IL2M1/I2
IL3M1/I3
IL1M2/I4
IL2M2/I5
IL3M2/I6
IL1M3/I7
IL2M3/I8
IL3M3/I9
IX1
IX2
IX3
Alternative
IX3
(Sensitive)
UL1-E
UL2-E
UL3-E
UEN/U4
Life Contact
F3
F4
Power Supply
F1
F2
Rear Interface
RTD-Box
D
Service Interface/ RTD-
Box
C
System Interface
B
Time Synchronization
A
Front Operator Panel
Earthing on the Rear Wall
1
Continue Next Figure
2
Continue Next Figure

7UT633*-* P/Q

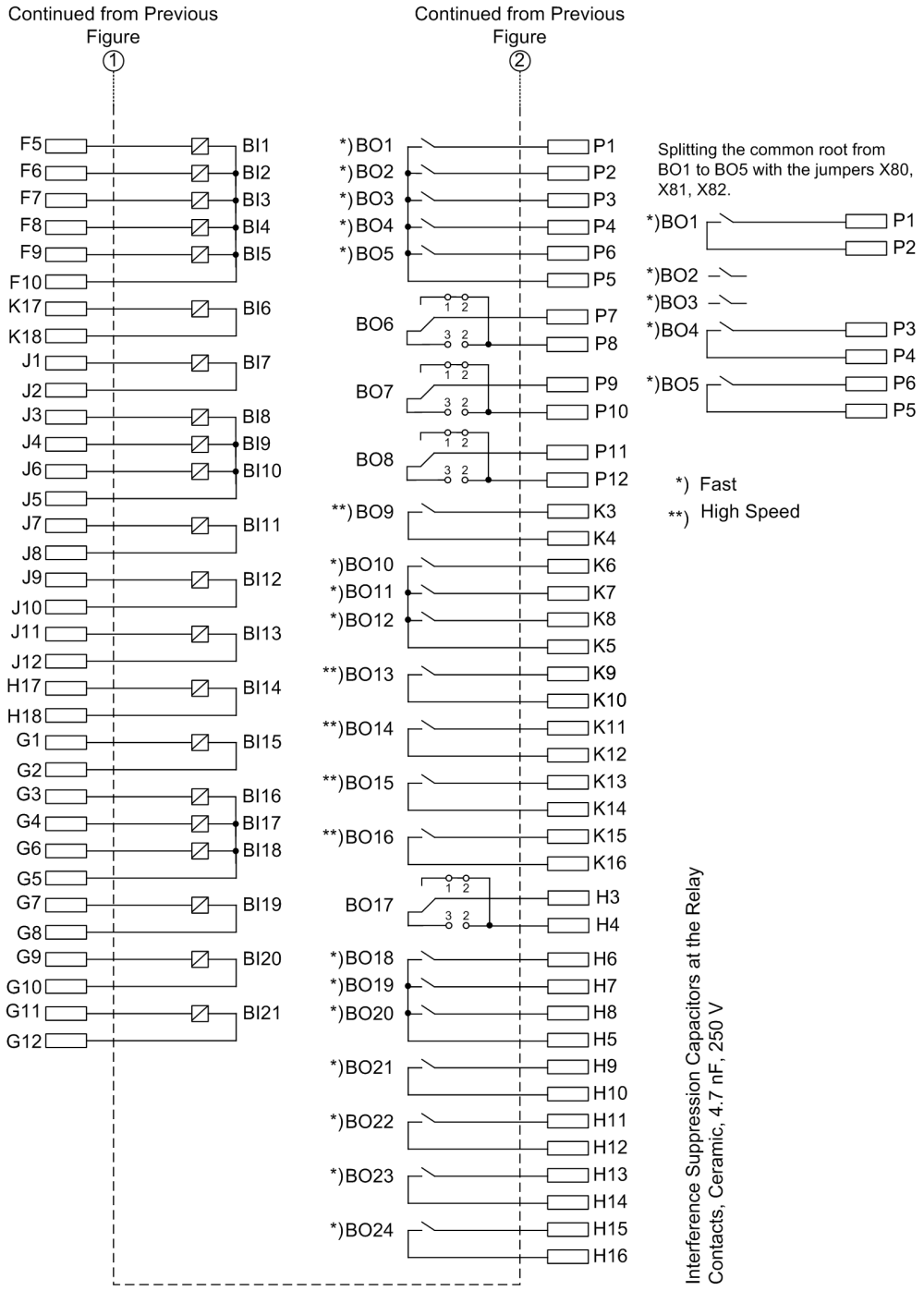

Figure A-3 General diagram 7UT633 (panel flush and cubicle mounting)

7UT635*-* D/E

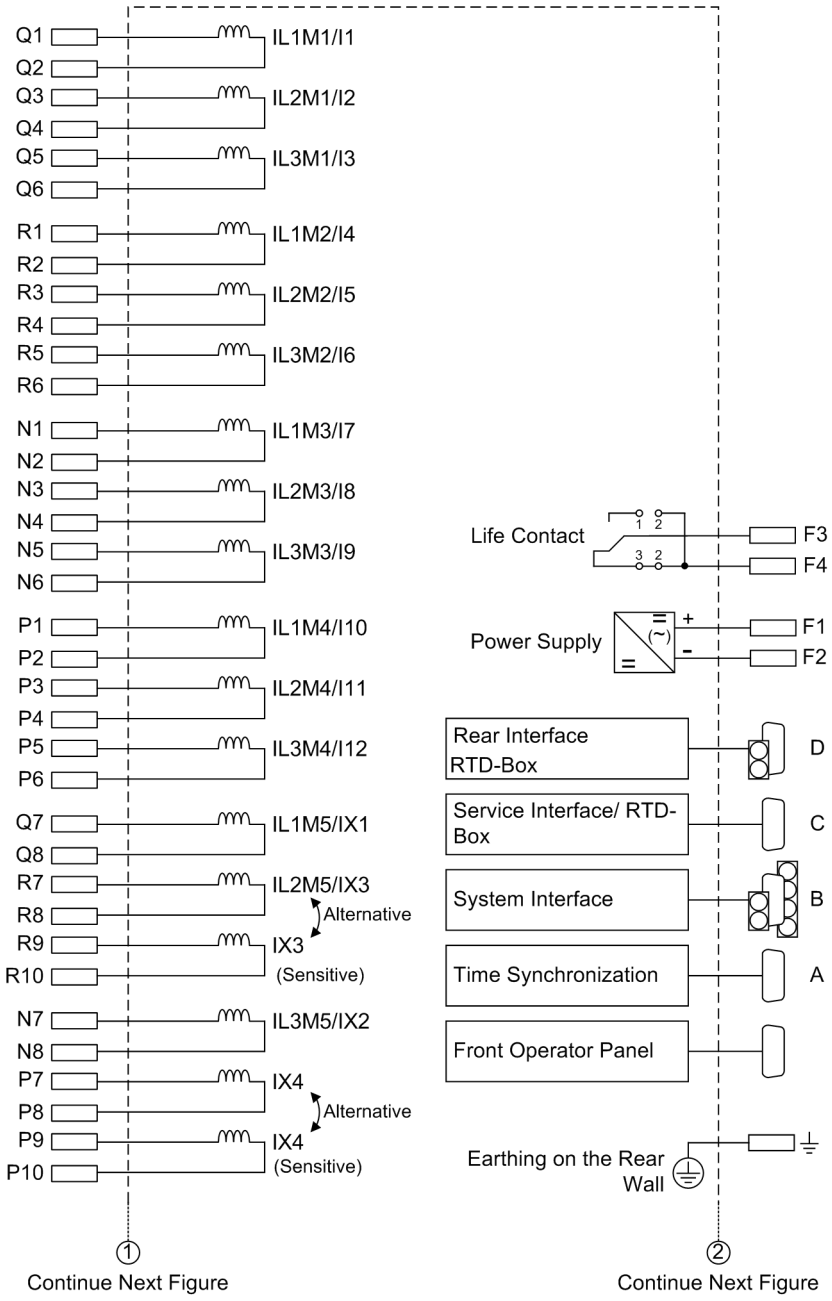
Q1
Q2
Q3
Q4
Q5
Q6
IL1M1/I1
IL2M1/I2
IL3M1/I3
R1
R2
R3
R4
R5
R6
IL1M2/I4
IL2M2/I5
IL3M2/I6
N1
N2
N3
N4
N5
N6
IL1M3/I7
IL2M3/I8
IL3M3/I9
P1
P2
P3
P4
P5
P6
IL1M4/I10
IL2M4/I11
IL3M4/I12
Q7
Q8
R7
R8
R9
R10
IL1M5/IX1
IL2M5/IX3
Alternative
IX3
(Sensitive)
N7
N8
P7
P8
P9
P10
IL3M5/IX2
IX4
Alternative
IX4
(Sensitive)
Life Contact
1 2
3 2
F3
F4
Power Supply
=
(~)
=
+
-
F1
F2
Rear Interface
RTD-Box
D
Service Interface/ RTD-Box
C
System Interface
B
Time Synchronization
A
Front Operator Panel
Earthing on the Rear Wall
1
Continue Next Figure
2
Continue Next Figure

7UT635*-* D/E

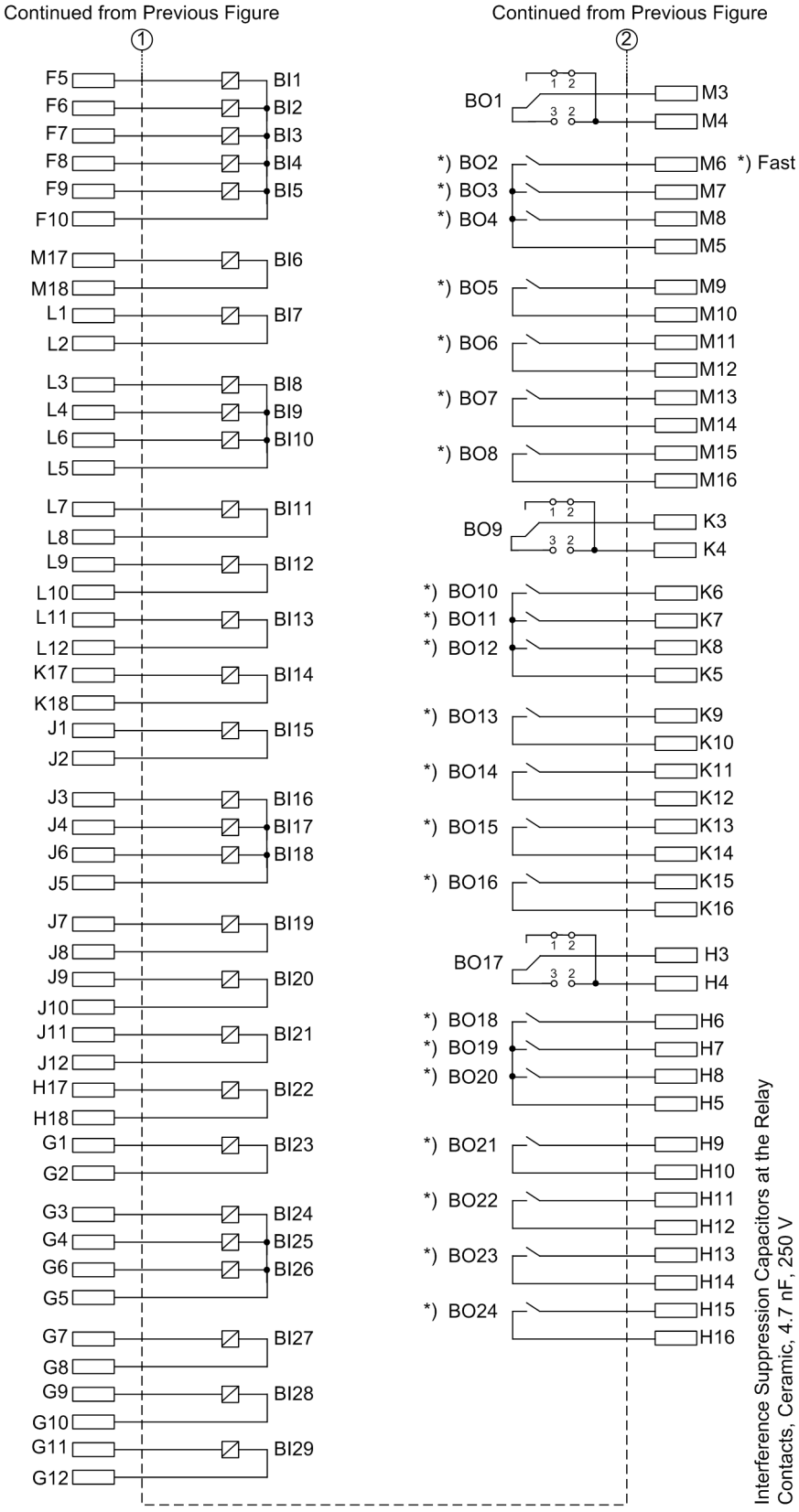

Figure A-4 General diagram 7UT635 (panel flush and cubicle mounting)

7UT635*-* P/Q

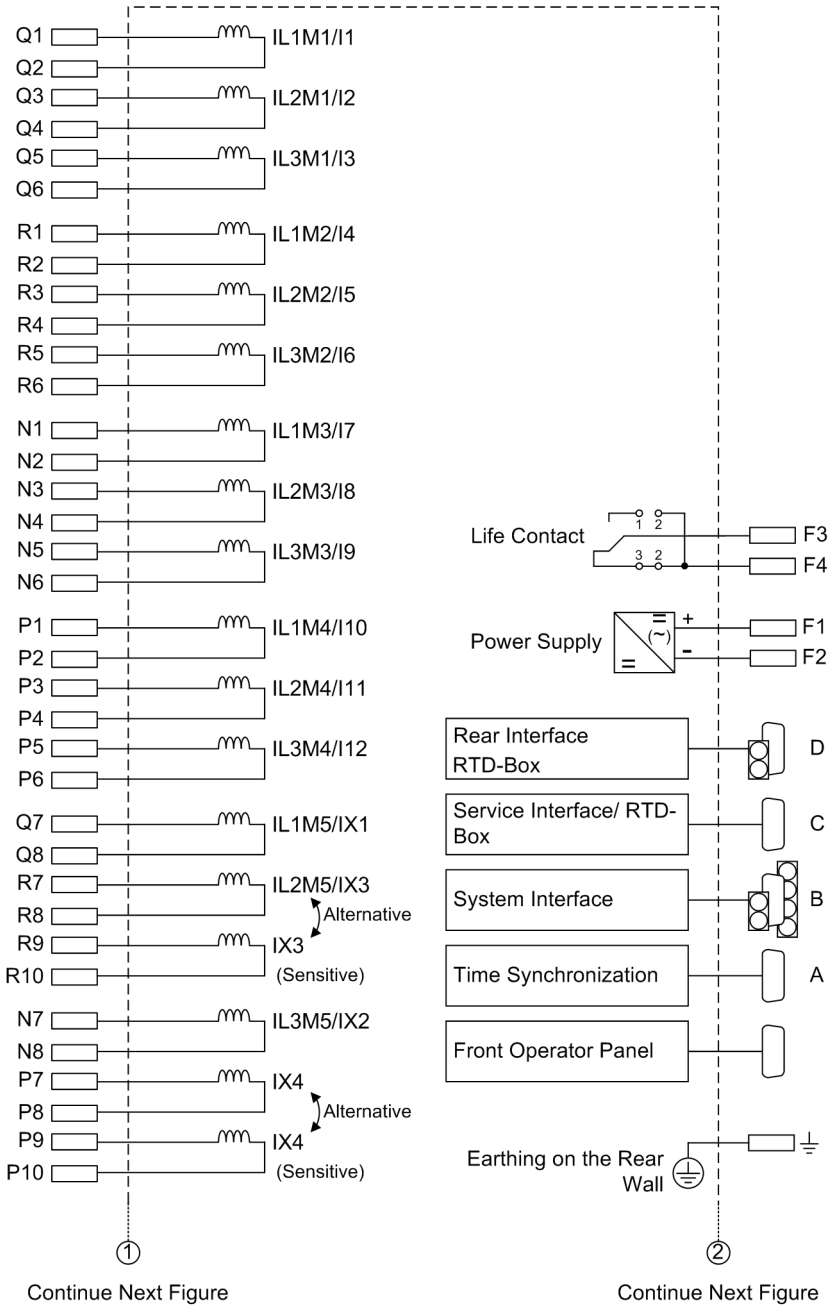
Q1
Q2
Q3
Q4
Q5
Q6
IL1M1/I1
IL2M1/I2
IL3M1/I3
R1
R2
R3
R4
R5
R6
IL1M2/I4
IL2M2/I5
IL3M2/I6
N1
N2
N3
N4
N5
N6
IL1M3/I7
IL2M3/I8
IL3M3/I9
P1
P2
P3
P4
P5
P6
IL1M4/I10
IL2M4/I11
IL3M4/I12
Q7
Q8
R7
R8
R9
R10
IL1M5/IX1
IL2M5/IX3
Alternative
IX3
(Sensitive)
N7
N8
P7
P8
P9
P10
IL3M5/IX2
IX4
Alternative
IX4
(Sensitive)
Life Contact
1 2
3 2
F3
F4
Power Supply
+
-
F1
F2
Rear Interface
RTD-Box
D
Service Interface/ RTD-
Box
C
System Interface
B
Time Synchronization
A
Front Operator Panel
Earthing on the Rear
Wall
1
2
Continue Next Figure
Continue Next Figure

7UT635*-* P/Q

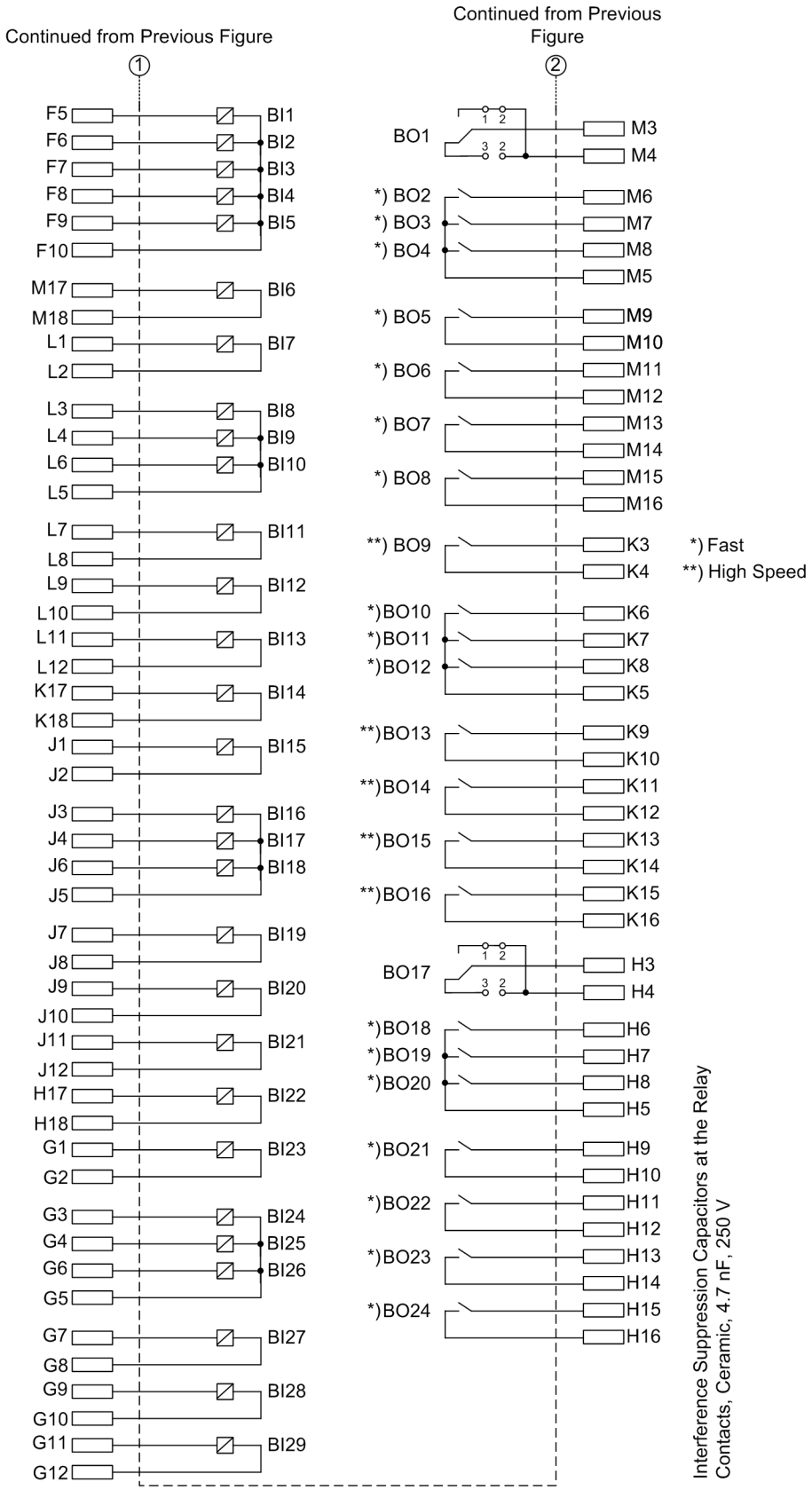

Figure A-5 General diagram 7UT635 (panel flush and cubicle mounting)

A.2.2 Panel Surface Mounting

7UT613*-* B

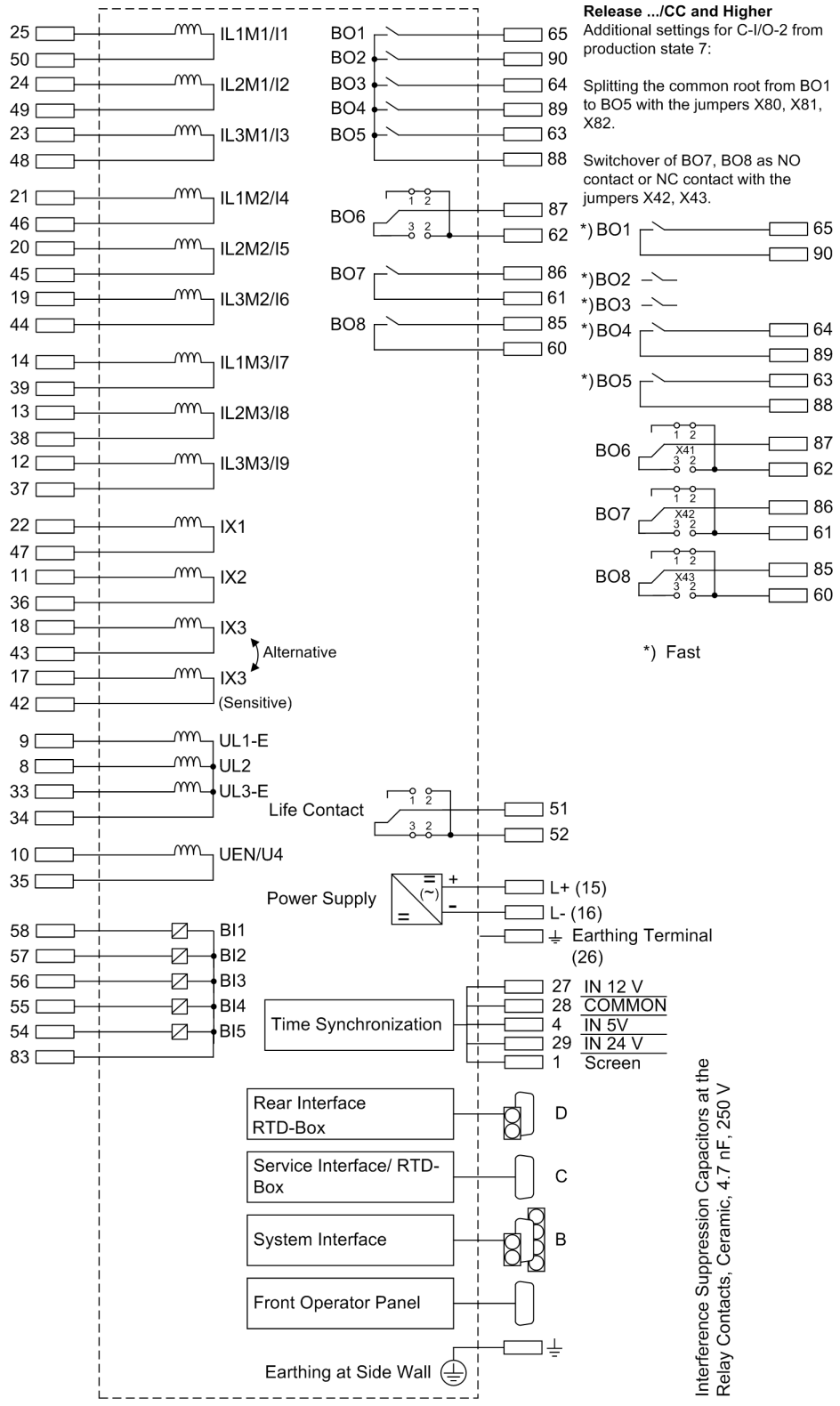

Figure A-6 General diagram 7UT613 (panel surface mounting)

7UT633*-* B

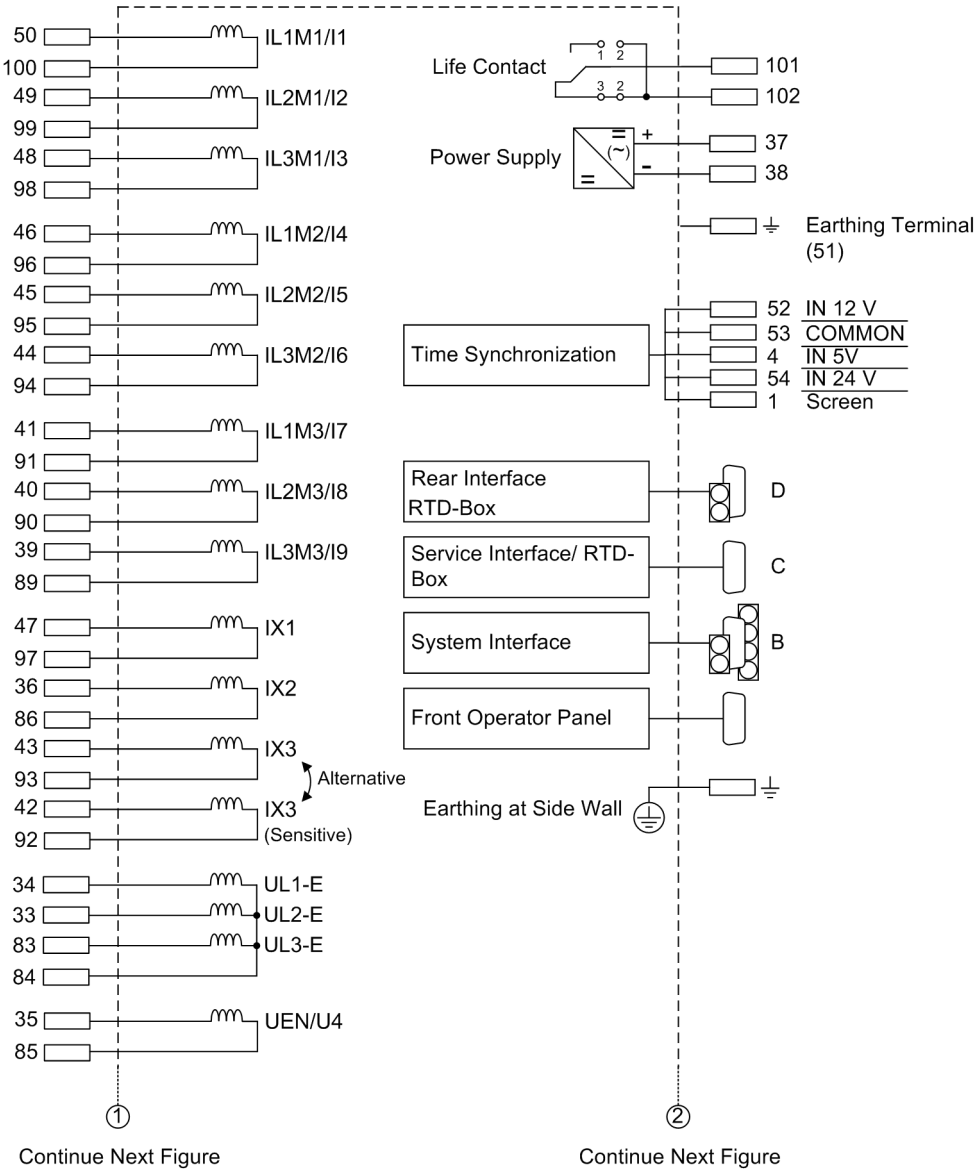
50
100
IL1M1/I1
49
99
IL2M1/I2
48
98
IL3M1/I3
46
96
IL1M2/I4
45
95
IL2M2/I5
44
94
IL3M2/I6
41
91
IL1M3/I7
40
90
IL2M3/I8
39
89
IL3M3/I9
47
97
IX1
36
86
IX2
43
93
IX3
Alternative
42
92
IX3
(Sensitive)
34
33
83
84
UL1-E
UL2-E
UL3-E
35
85
UEN/U4
Life Contact
101
102
Power Supply
37
38
Earthing Terminal
(51)
Time Synchronization
52 IN 12 V
53 COMMON
4 IN 5V
54 IN 24 V
1 Screen
Rear Interface
RTD-Box
D
Service Interface/ RTD-
Box
C
System Interface
B
Front Operator Panel
Earthing at Side Wall
①
Continue Next Figure
②
Continue Next Figure

7UT633*-* B

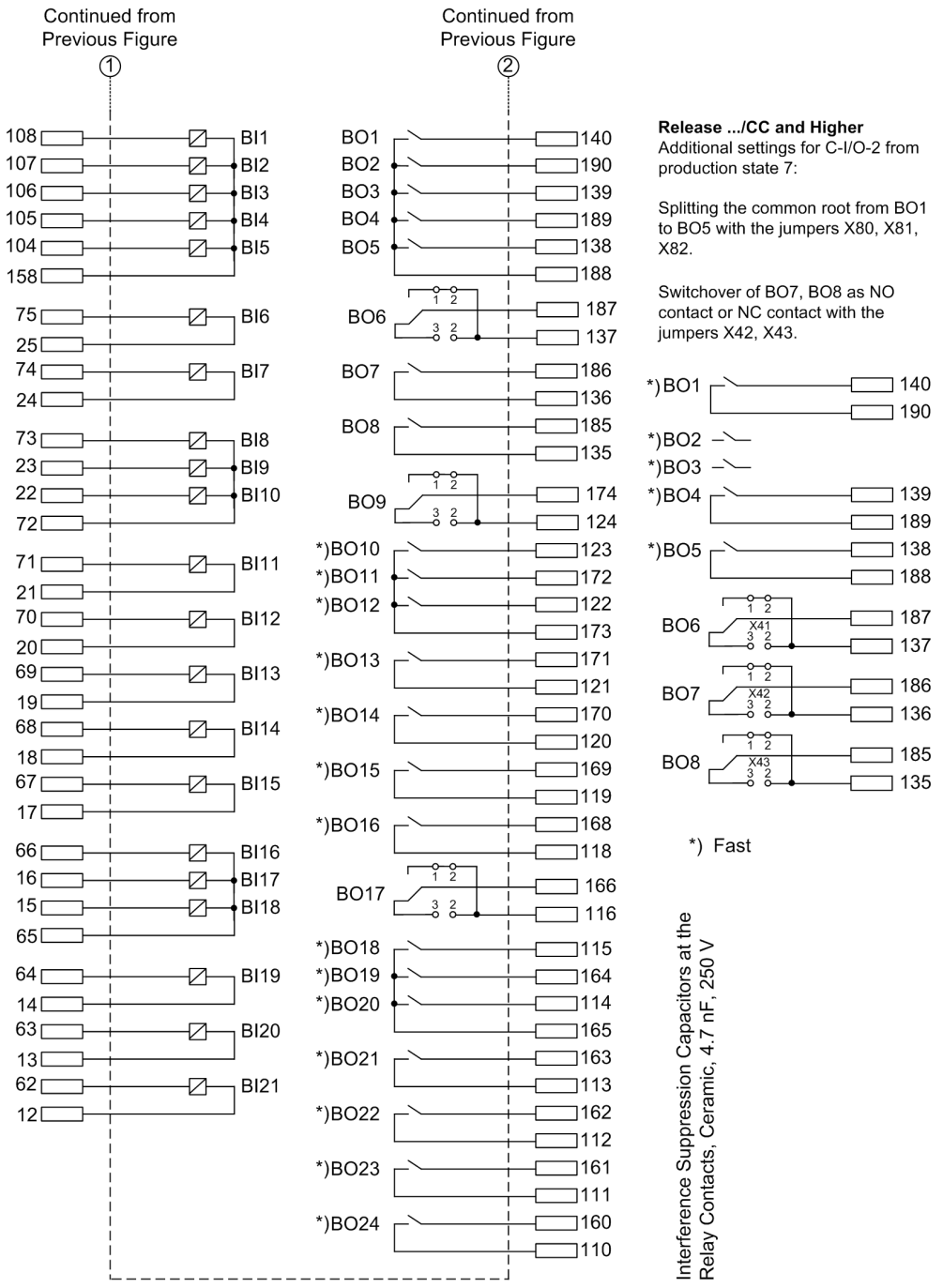

Figure A-7 General diagram 7UT633 (panel surface mounting)

7UT633*-* N

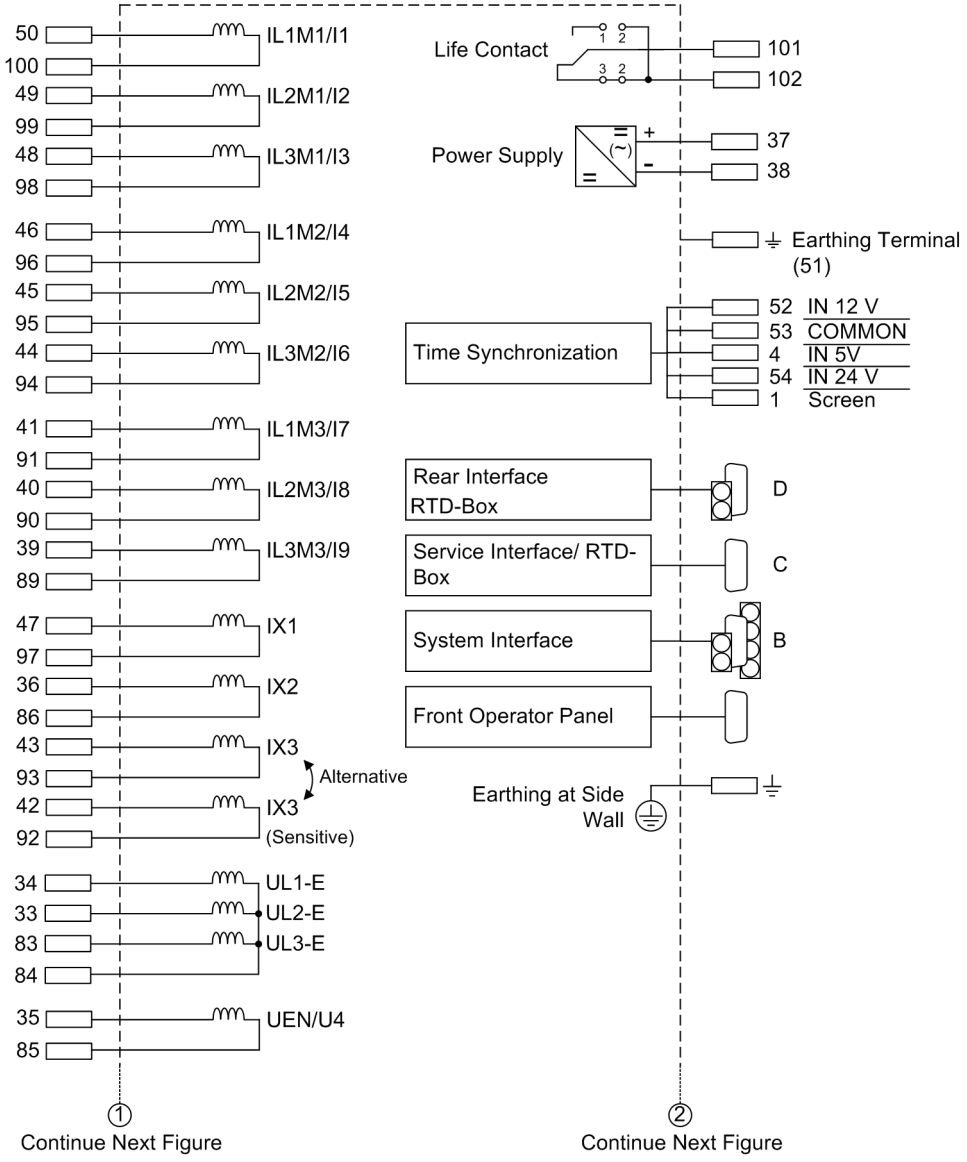
50
100
IL1M1/I1
49
99
IL2M1/I2
48
98
IL3M1/I3
46
96
IL1M2/I4
45
95
IL2M2/I5
44
94
IL3M2/I6
41
91
IL1M3/I7
40
90
IL2M3/I8
39
89
IL3M3/I9
47
97
IX1
36
86
IX2
43
93
IX3
Alternative
42
92
IX3
(Sensitive)
34
33
83
84
UL1-E
UL2-E
UL3-E
35
85
UEN/U4
Life Contact
101
102
Power Supply
37
38
Earthing Terminal
(51)
Time Synchronization
52 IN 12 V
53 COMMON
4 IN 5V
54 IN 24 V
1 Screen
Rear Interface
RTD-Box
D
Service Interface/ RTD-
Box
C
System Interface
B
Front Operator Panel
Earthing at Side
Wall
1
Continue Next Figure
2
Continue Next Figure

7UT633*-* N

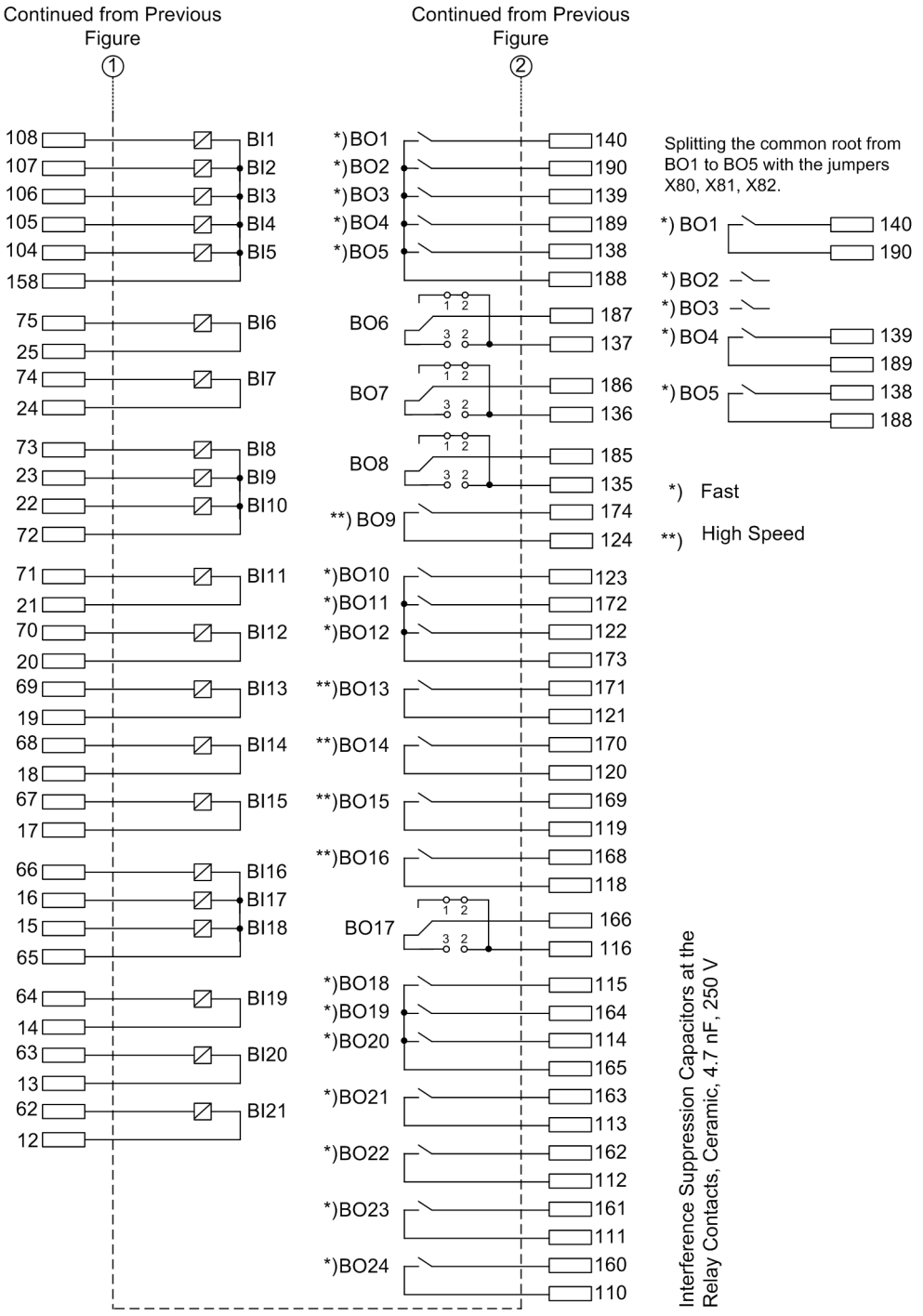

Figure A-8 General diagram 7UT633 (panel surface mounting)

7UT635*-* B

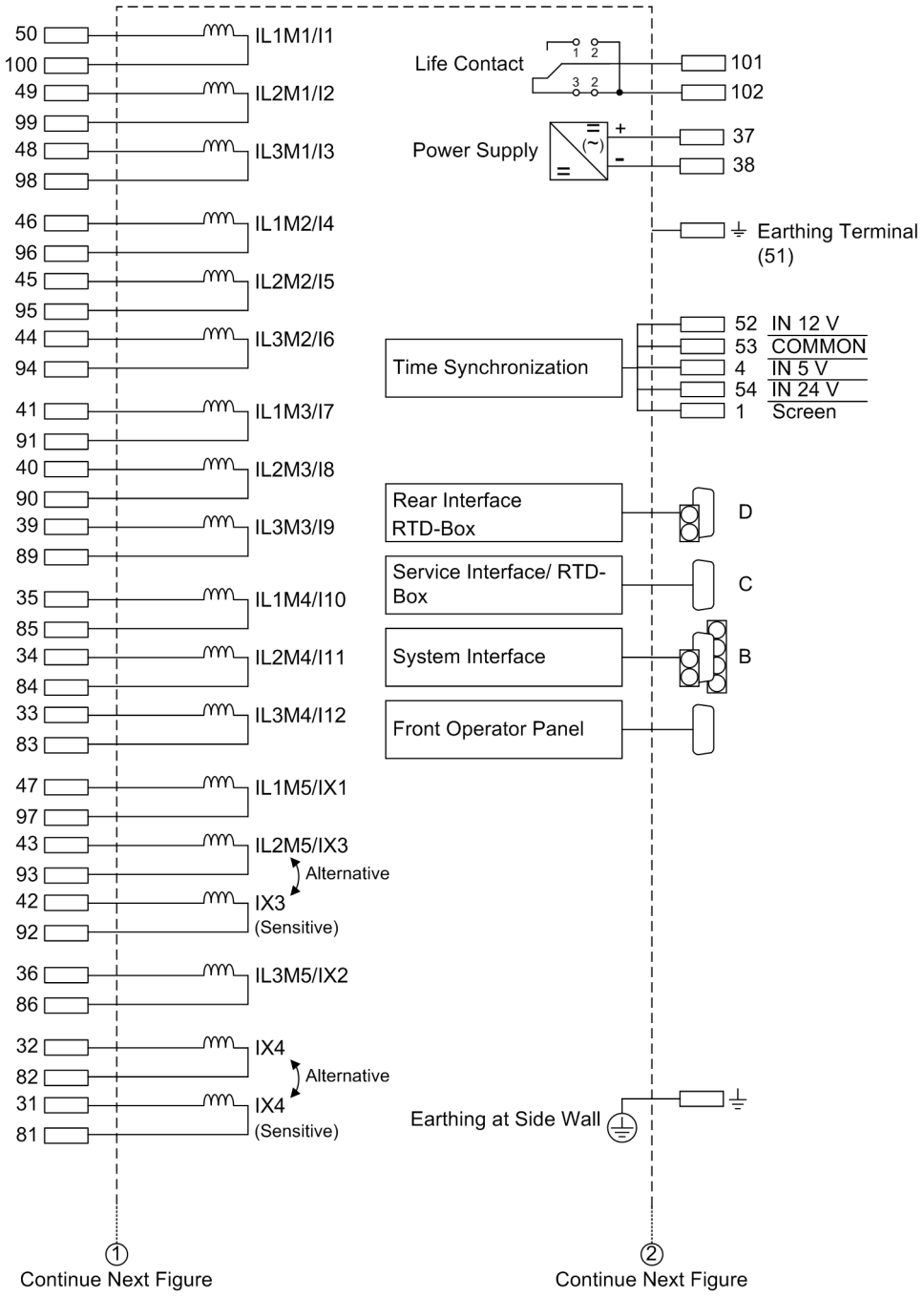
50
100
IL1M1/I1
49
99
IL2M1/I2
48
98
IL3M1/I3
46
96
IL1M2/I4
45
95
IL2M2/I5
44
94
IL3M2/I6
41
91
IL1M3/I7
40
90
IL2M3/I8
39
89
IL3M3/I9
35
85
IL1M4/I10
34
84
IL2M4/I11
33
83
IL3M4/I12
47
97
IL1M5/IX1
43
93
IL2M5/IX3
Alternative
42
92
IX3
(Sensitive)
36
86
IL3M5/IX2
32
82
IX4
Alternative
31
81
IX4
(Sensitive)
Life Contact
1 2
3 2
101
102
Power Supply
=
(~)
=
+
-
37
38
Earthing Terminal
(51)
Time Synchronization
52 IN 12 V
53 COMMON
4 IN 5 V
54 IN 24 V
1 Screen
Rear Interface
RTD-Box
D
Service Interface/ RTD-
Box
C
System Interface
B
Front Operator Panel
Earthing at Side Wall
1
Continue Next Figure
2
Continue Next Figure

7UT635*-* B

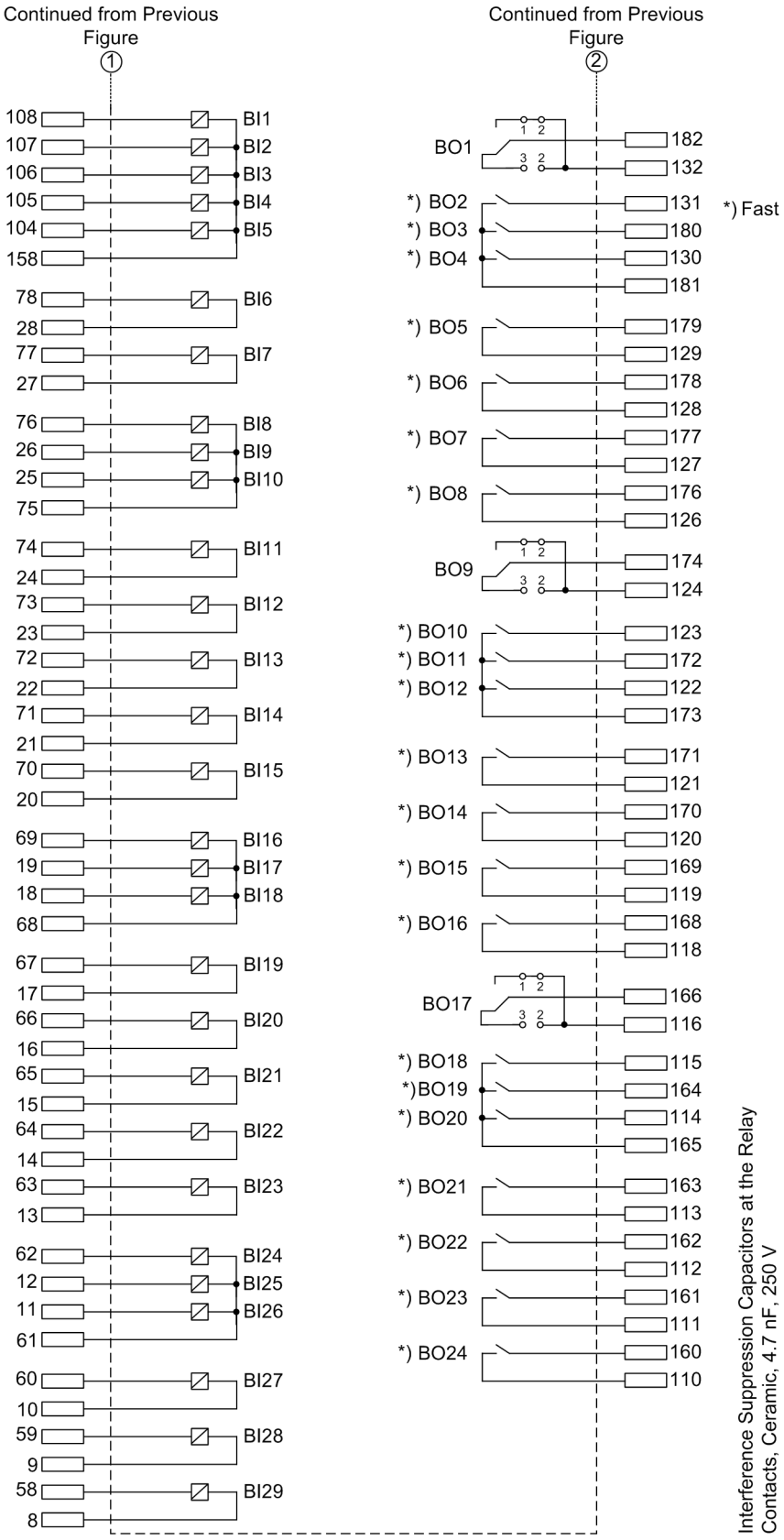

Figure A-9 General diagram 7UT635 (panel surface mounting)

7UT635*-* N

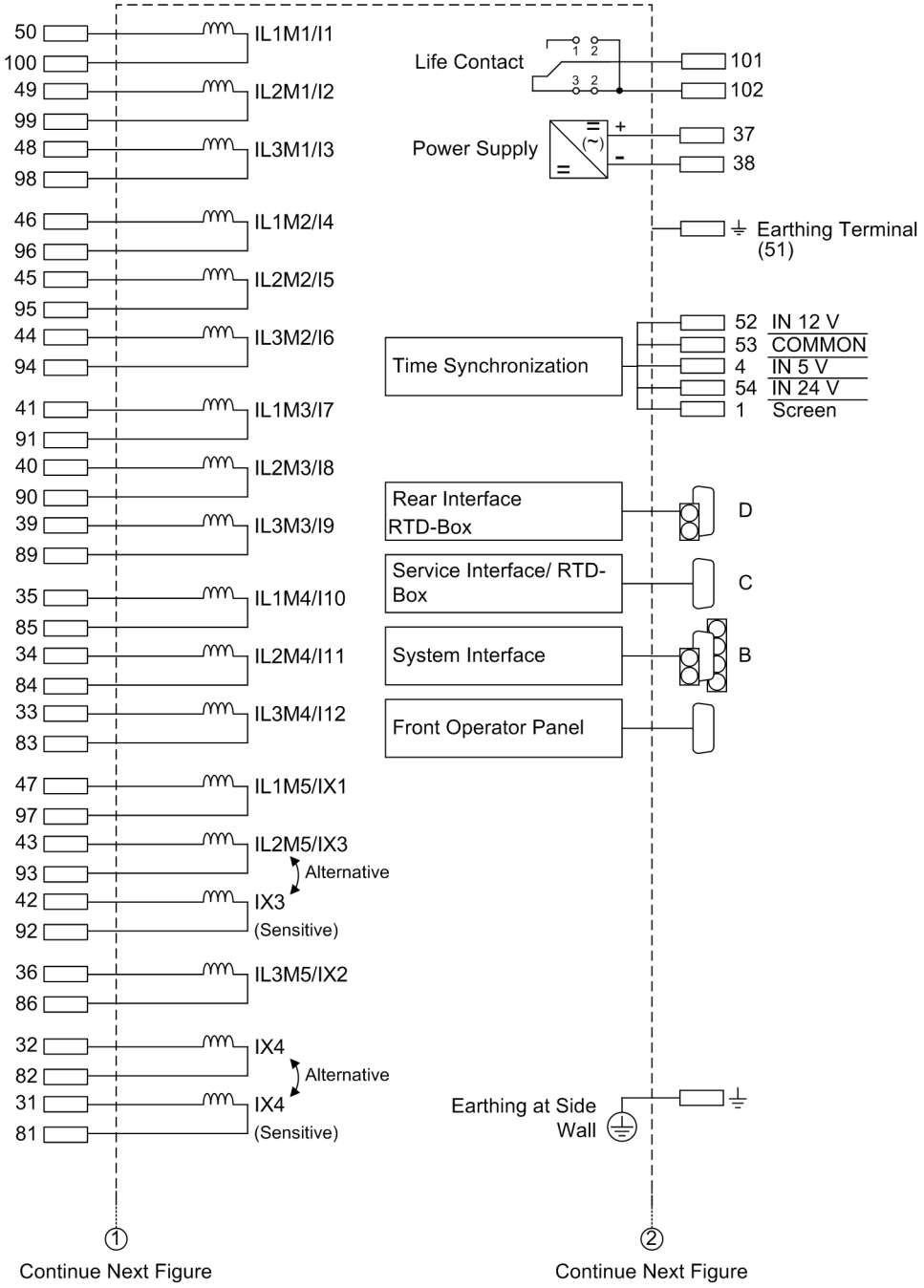
50
100
IL1M1/I1
49
99
IL2M1/I2
48
98
IL3M1/I3
46
96
IL1M2/I4
45
95
IL2M2/I5
44
94
IL3M2/I6
41
91
IL1M3/I7
40
90
IL2M3/I8
39
89
IL3M3/I9
35
85
IL1M4/I10
34
84
IL2M4/I11
33
83
IL3M4/I12
47
97
IL1M5/IX1
43
93
IL2M5/IX3
Alternative
42
92
IX3
(Sensitive)
36
86
IL3M5/IX2
32
82
IX4
Alternative
31
81
IX4
(Sensitive)
Life Contact
1 2
3 2
101
102
Power Supply
=
(~)
=
+
-
37
38
Earthing Terminal
(51)
Time Synchronization
52 IN 12 V
53 COMMON
4 IN 5 V
54 IN 24 V
1 Screen
Rear Interface
RTD-Box
D
Service Interface/ RTD-
Box
C
System Interface
B
Front Operator Panel
Earthing at Side
Wall
1
Continue Next Figure
2
Continue Next Figure

7UT635*-* N

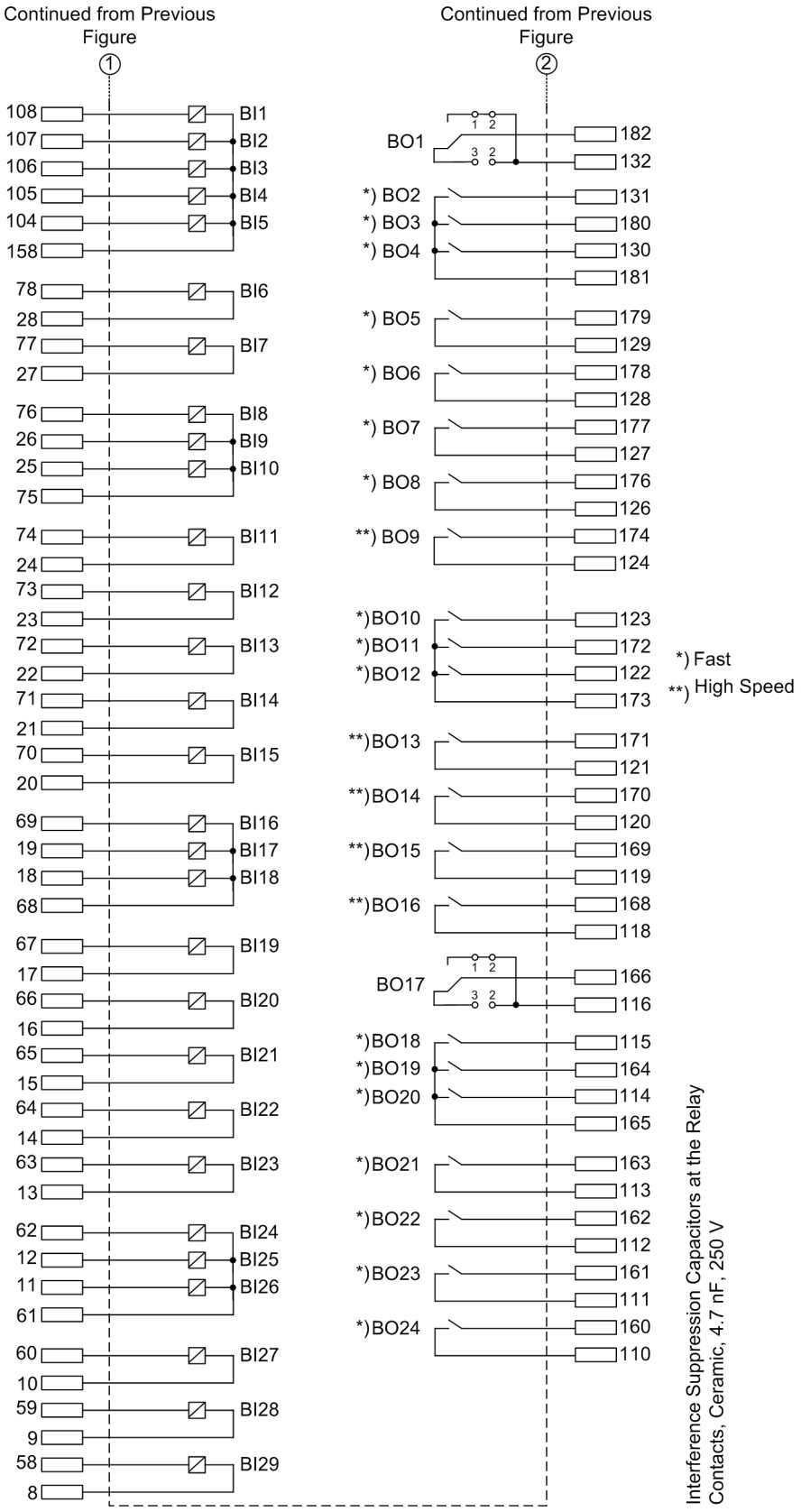

Figure A-10 General diagram 7UT635 (panel surface mounting)

A.3 Connection Examples

A.3.1 Current Transformer Connection Examples

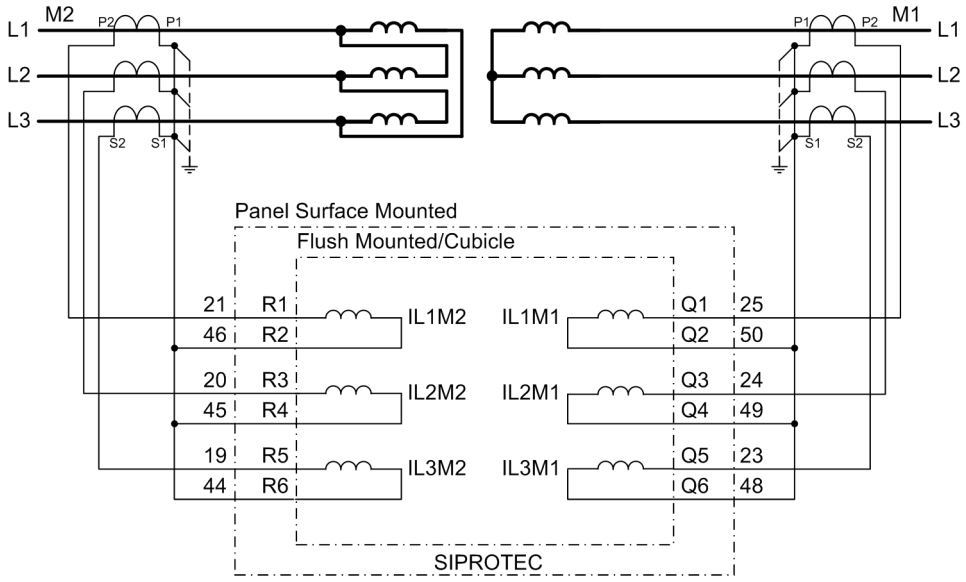

Figure A-11 Connection example 7UT613 for a three-phase power transformer without earthed starpoint

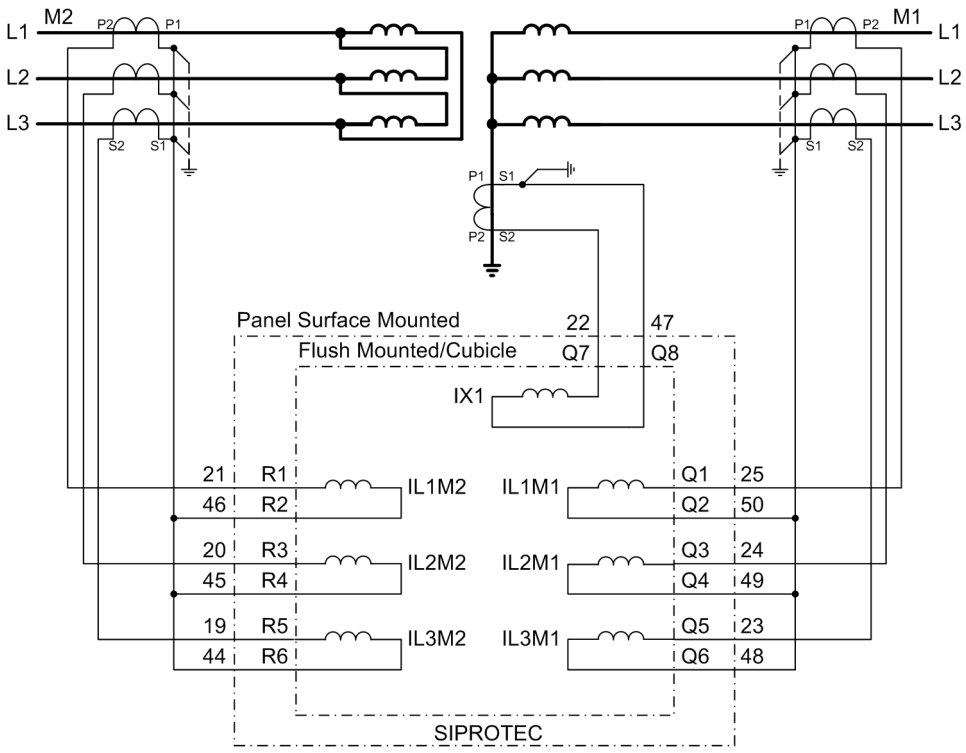

Figure A-12 Connection example 7UT613 for a three-phase power transformer with earthed starpoint and current transformer between starpoint and earthing point

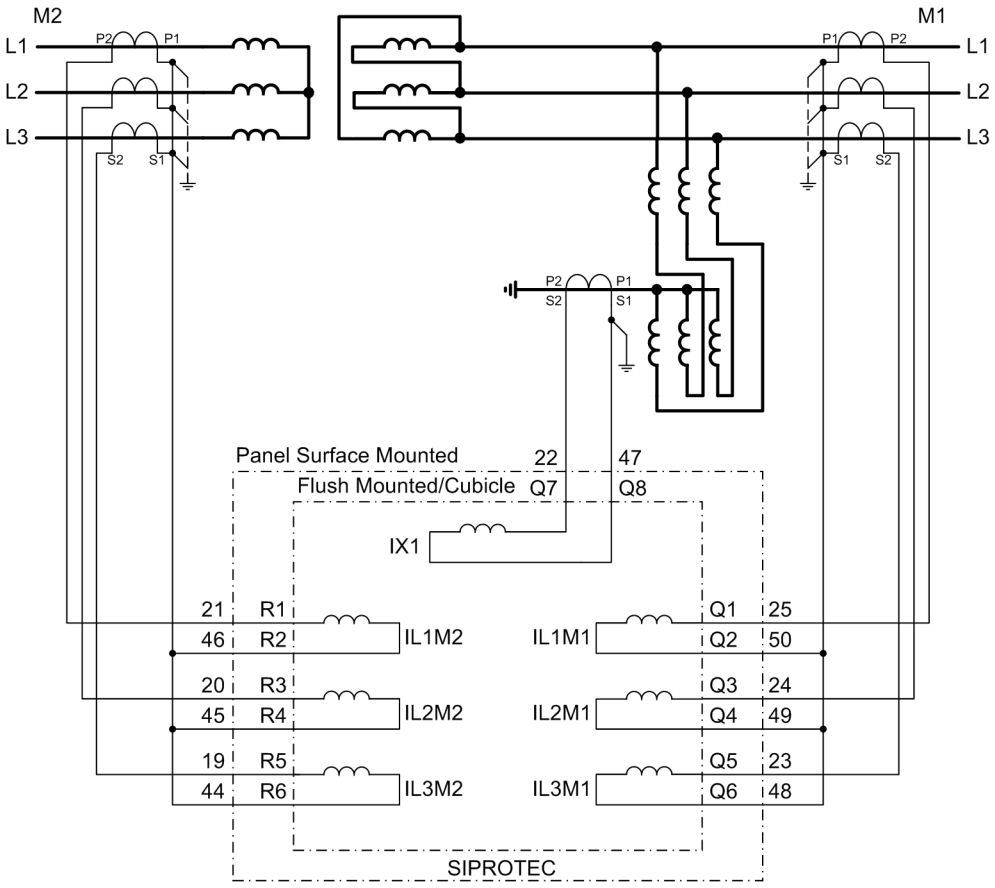

Figure A-13 Connection example 7UT613 for a three-phase power transformer with star-point former and current transformer between starpoint and earthing point

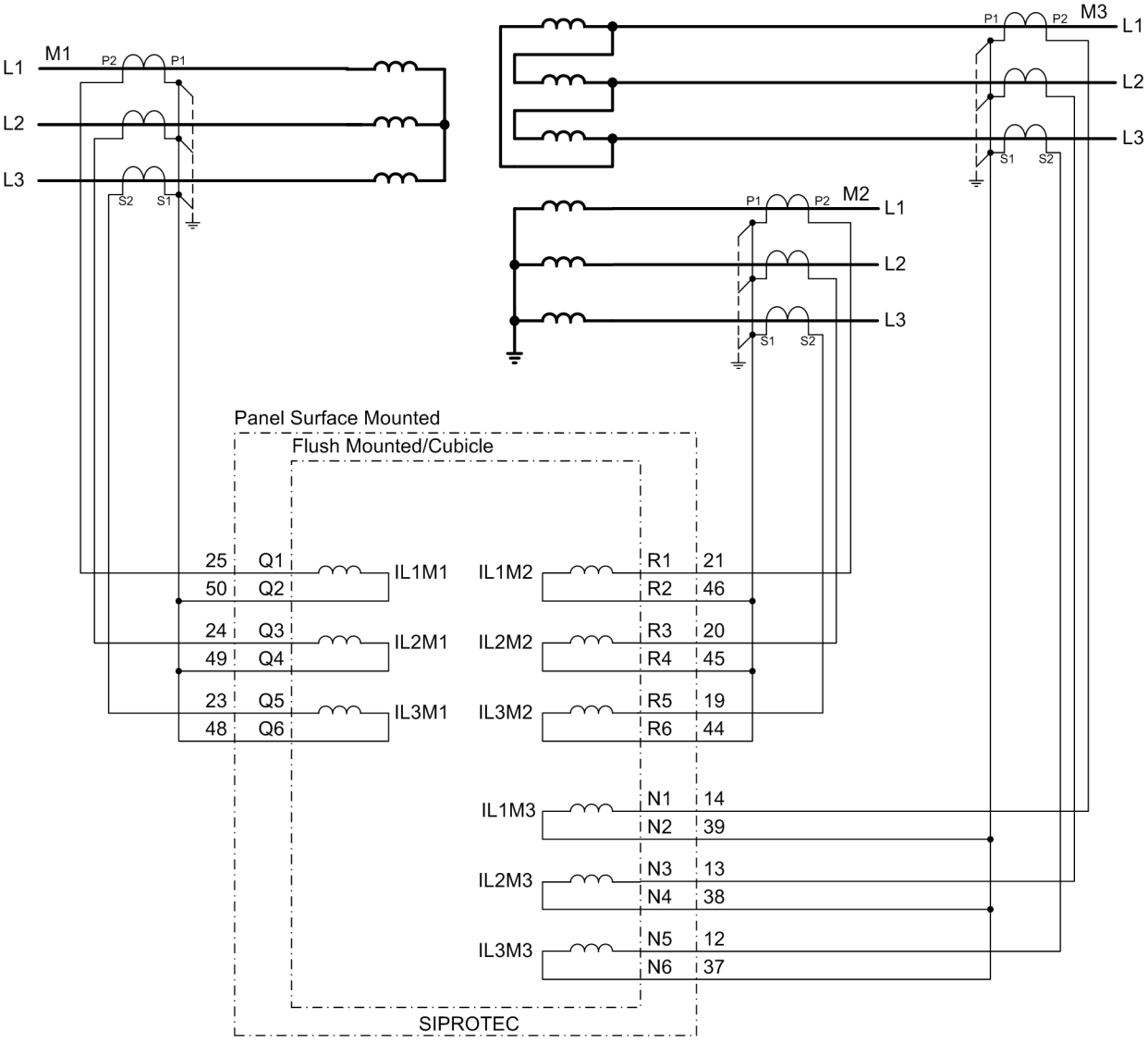

Figure A-14 Connection example 7UT613 for a three-phase power transformer

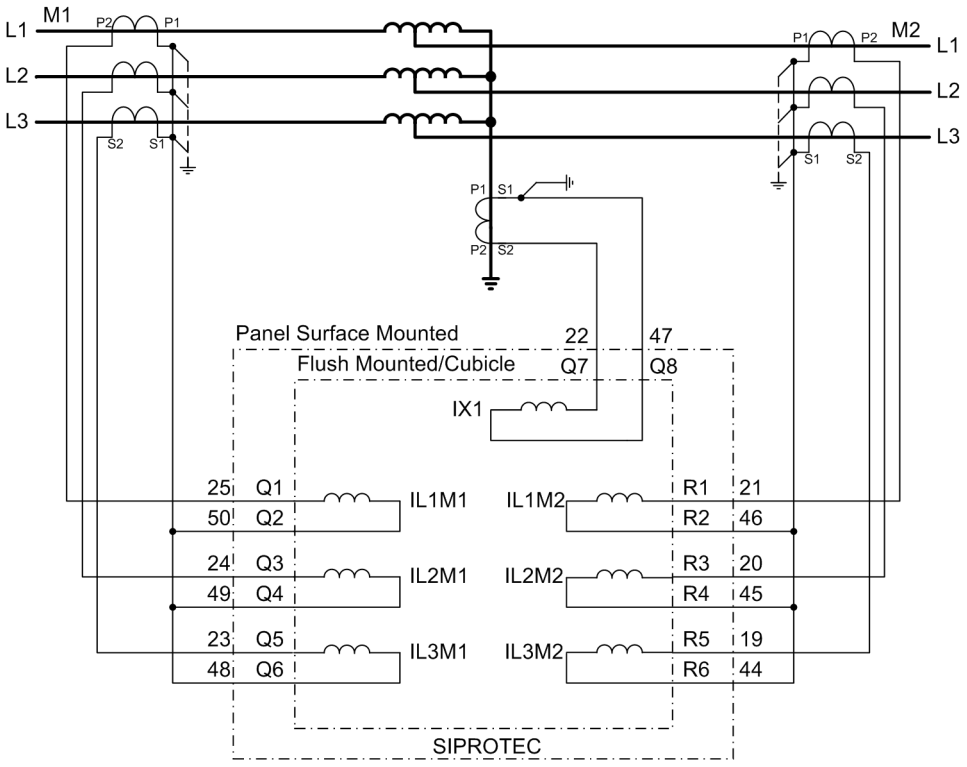

Figure A-15 Connection example 7UT613 for an earthed auto-transformer with current transformer between starpoint and earthing point

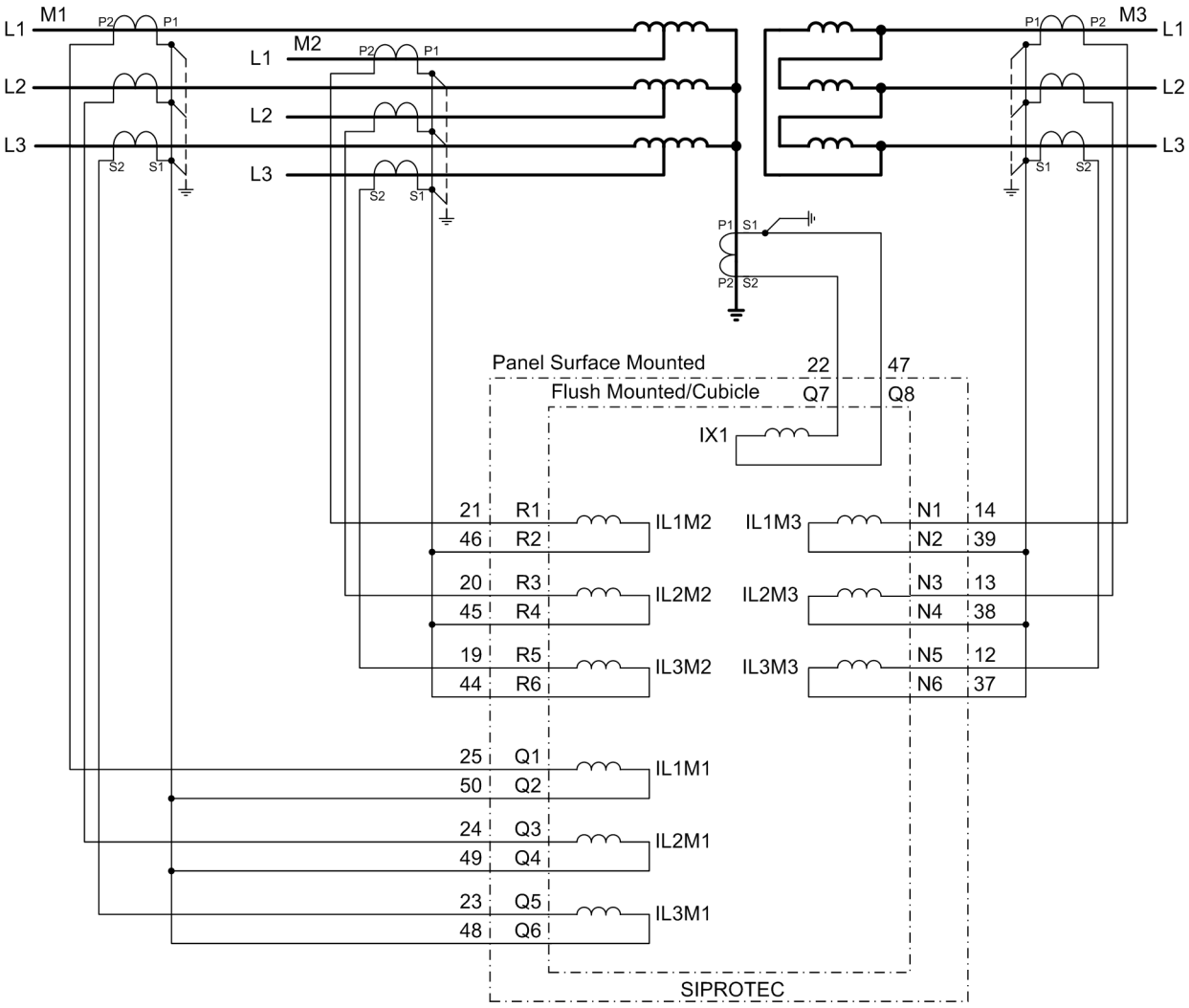

Figure A-16 Connection example 7UT613 for an earthed auto-transformer with brought-out delta winding capable of carrying load (tertiary winding) and current transformer between starpoint and earthing point

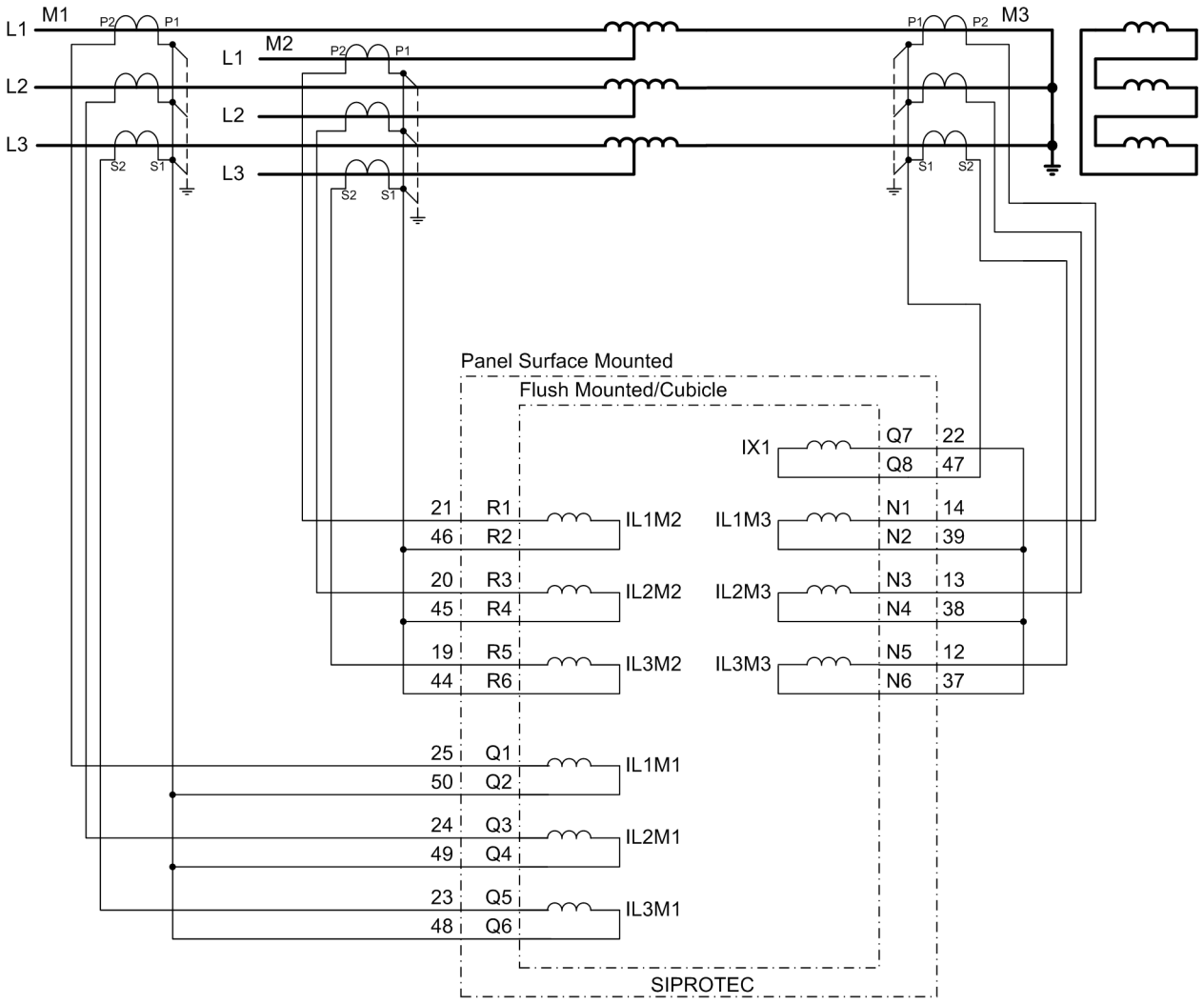

Figure A-17 Connection example 7UT613 for an auto-transformer bank with protected object auto-transformer branch-points, with individually accessible earthing electrodes equipped with CTs (M3). The CTs on the earthing side constitute a separate side for current comparison for each transformer of the bank. The starpoint of the CTs at M3 is routed via an auxiliary input (I_{Z1}), which allows realisation of restricted earth fault protection and/or earth overcurrent protection.

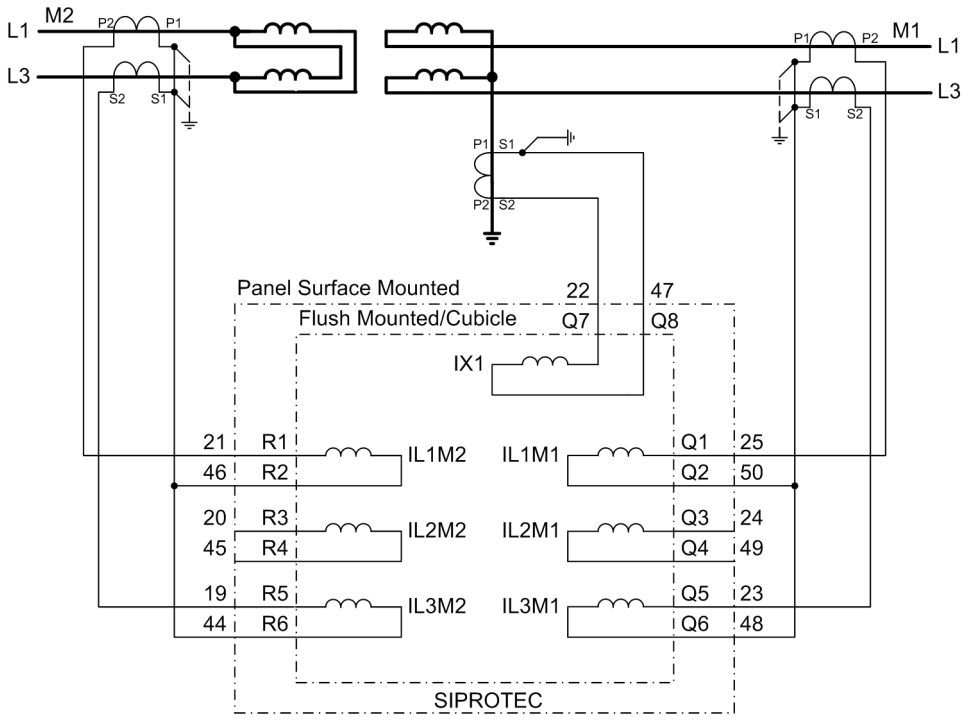

Figure A-18 Connection example 7UT613 for a single-phase power transformer with current transformer between starpoint and earthing point

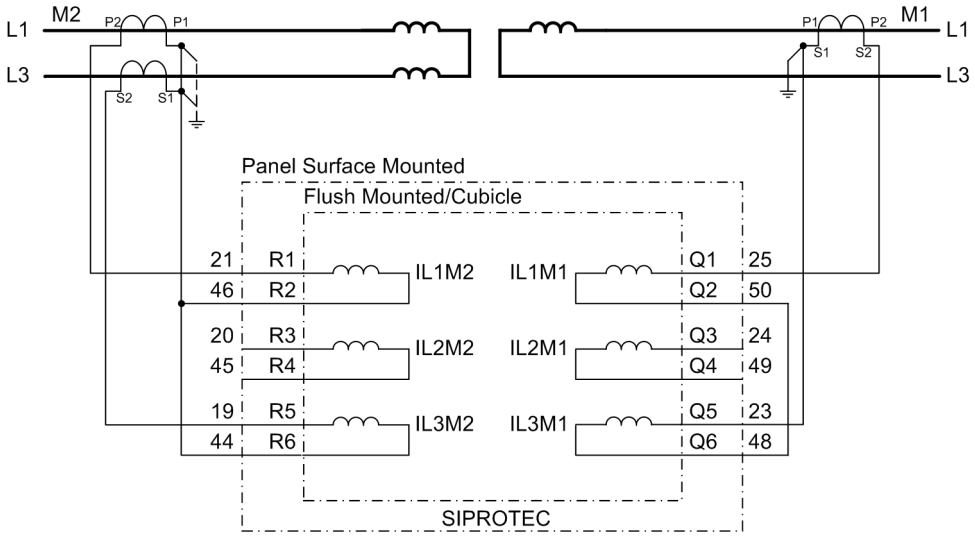

Figure A-19 Connection example 7UT613 for a single-phase power transformer with only one current transformer (right side)

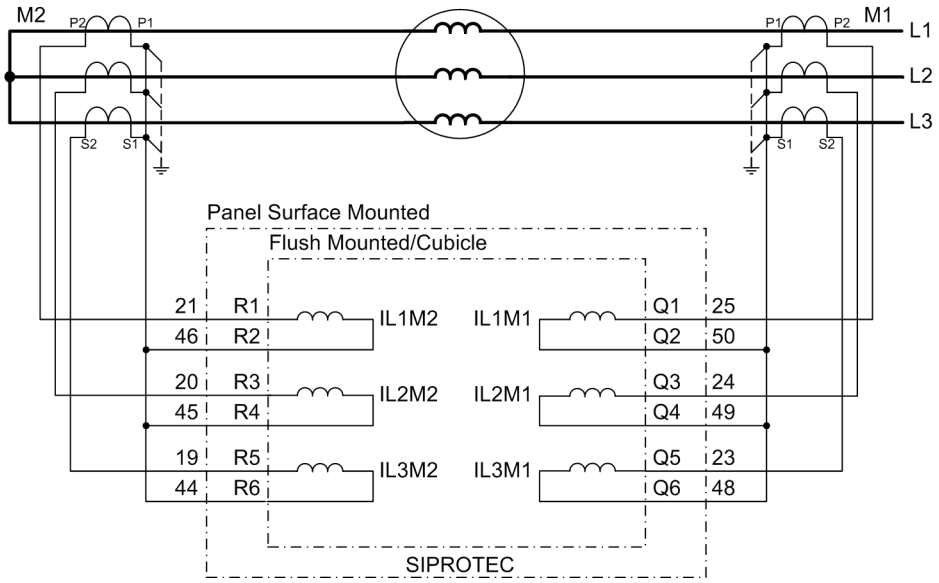

Figure A-20 Connection example 7UT613 for a generator or motor

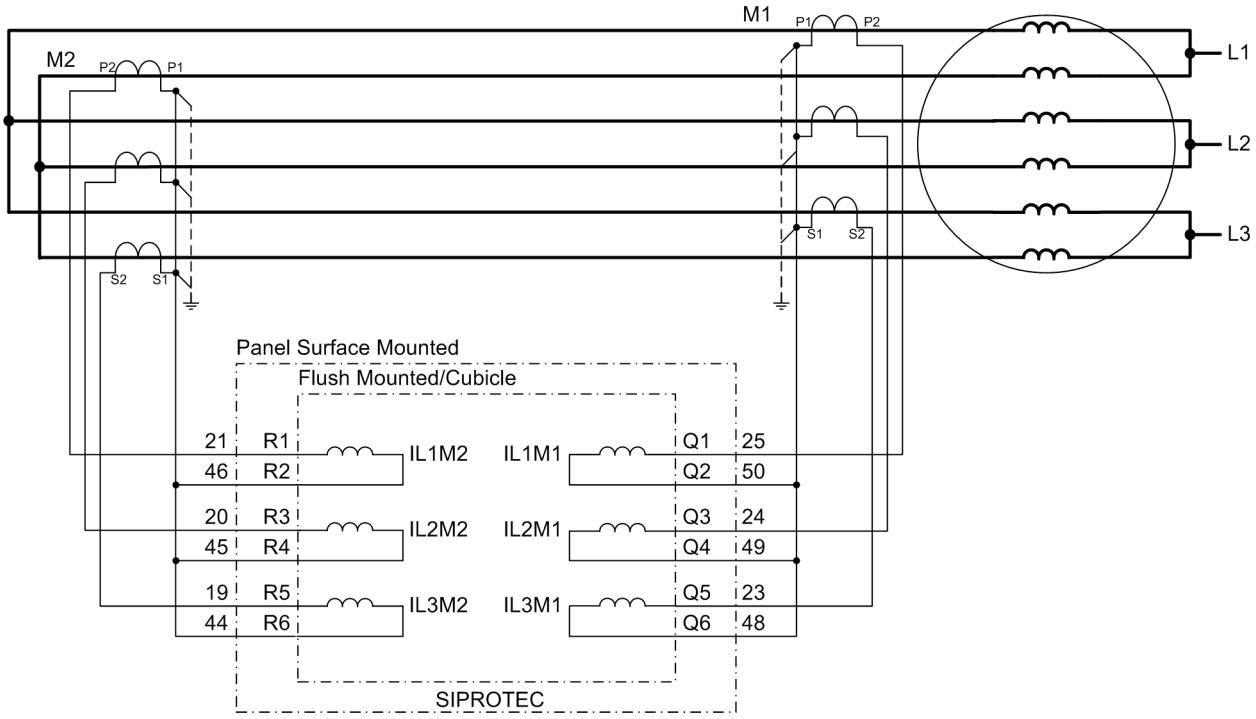

Figure A-21 Connection example 7UT613 as transversal differential protection for a generator with two windings per phase

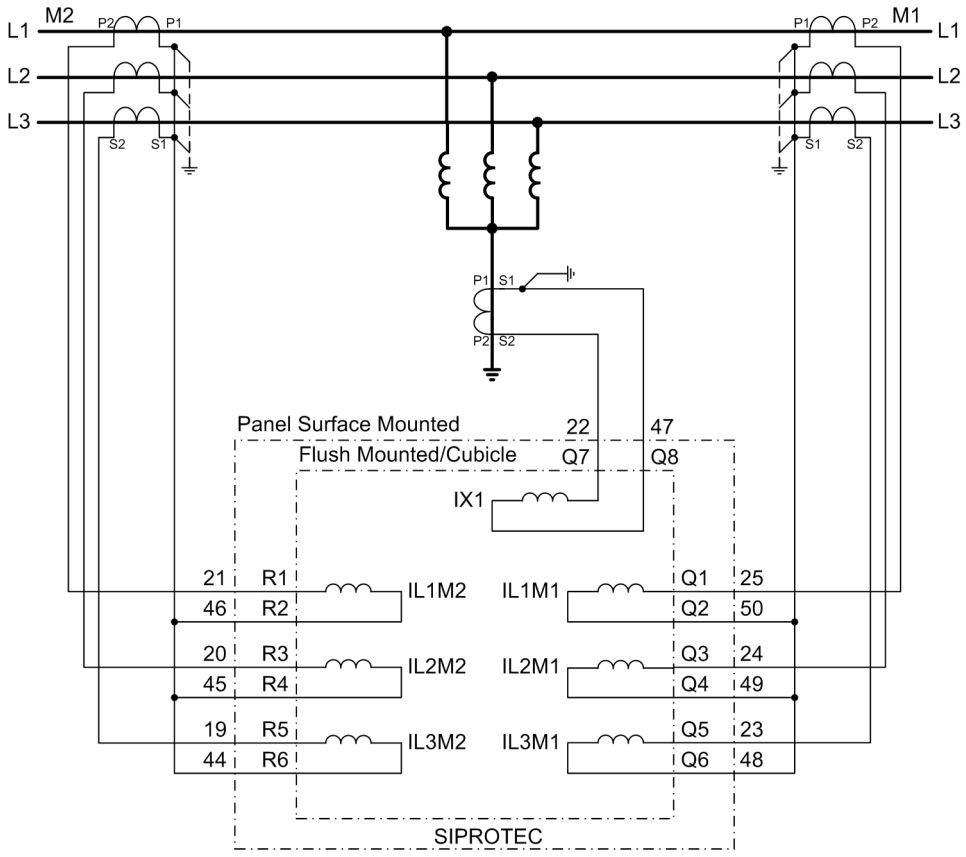

Figure A-22 Connection example 7UT613 for an earthed shunt reactor with current transformer between starpoint and earthing point

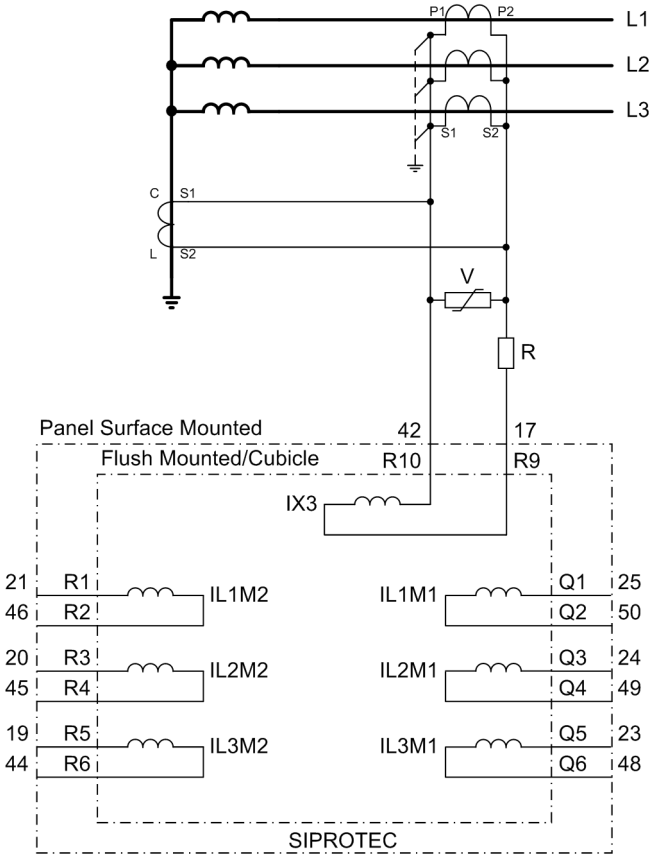

Figure A-23 Connection example 7UT613 as high-impedance protection on a transformer winding with earthed starpoint (the illustration shows the partial connection of the high-impedance protection); I_{Z3} is connected to the high-sensitivity input

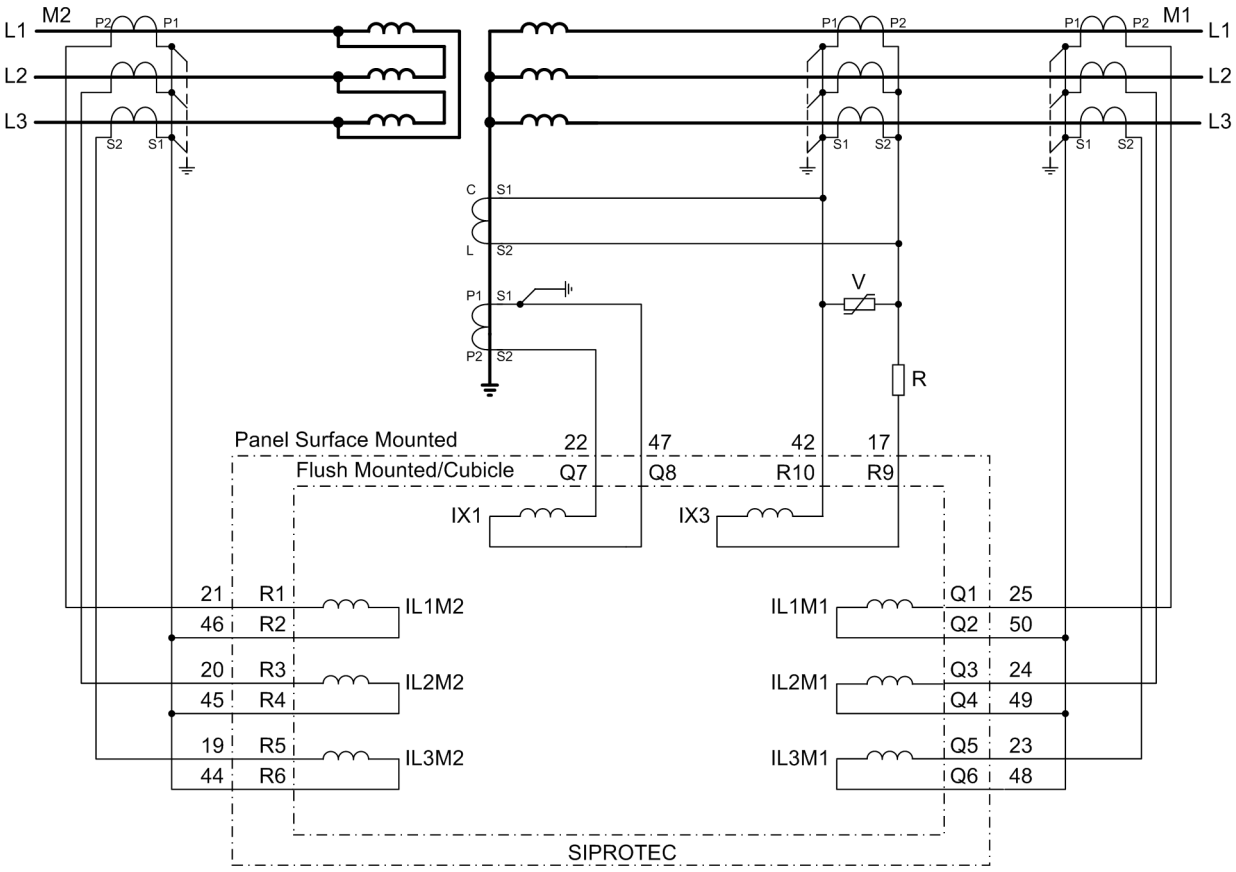

Figure A-24 Connection example 7UT613 for a three-phase power transformer with current transformers between star-point and earthing point, additional connection for high-impedance protection; I_{Z3} connected to the high-sensitivity input

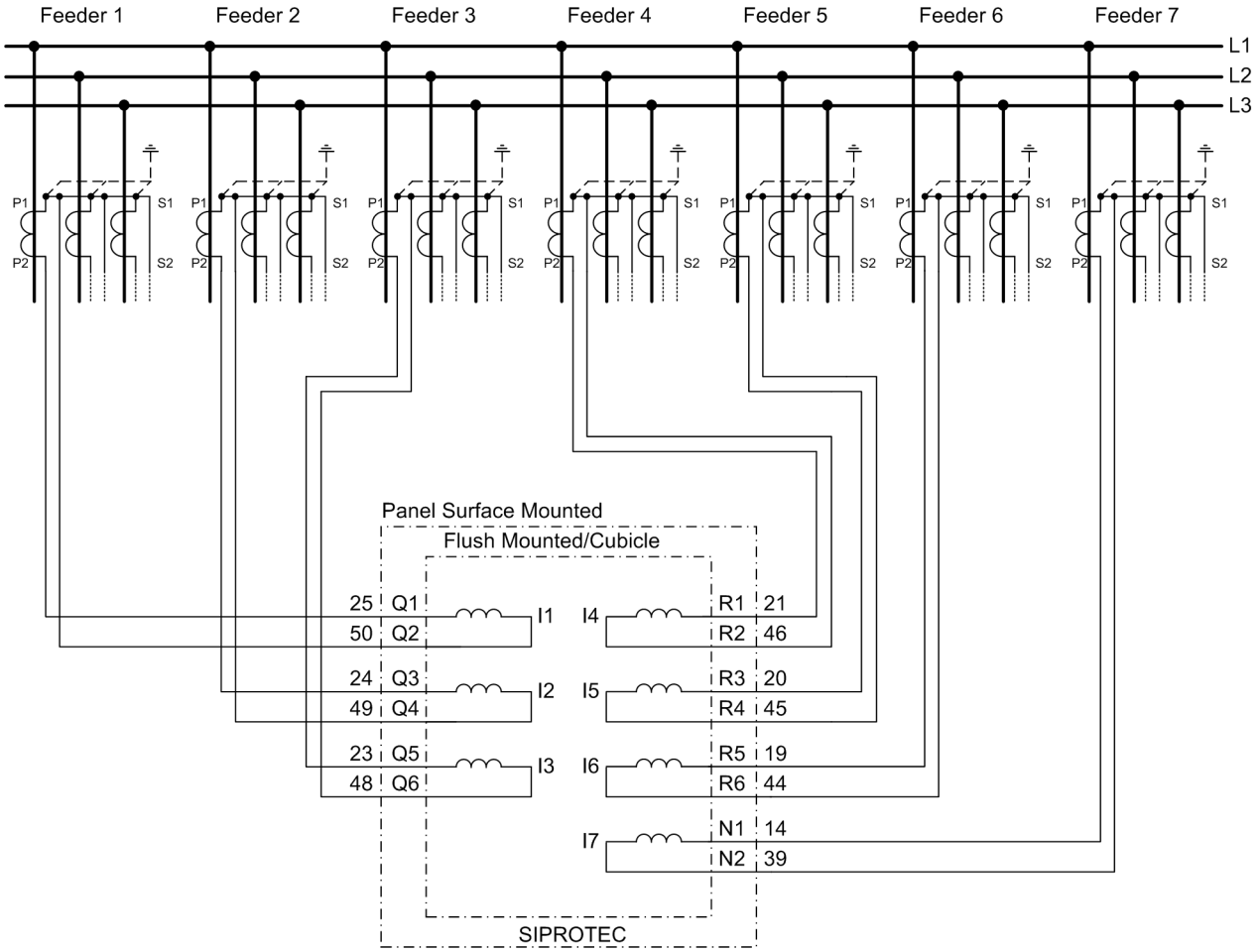

Figure A-25 Connection example 7UT613 as single-phase busbar protection for 7 feeders, illustrated for phase L1

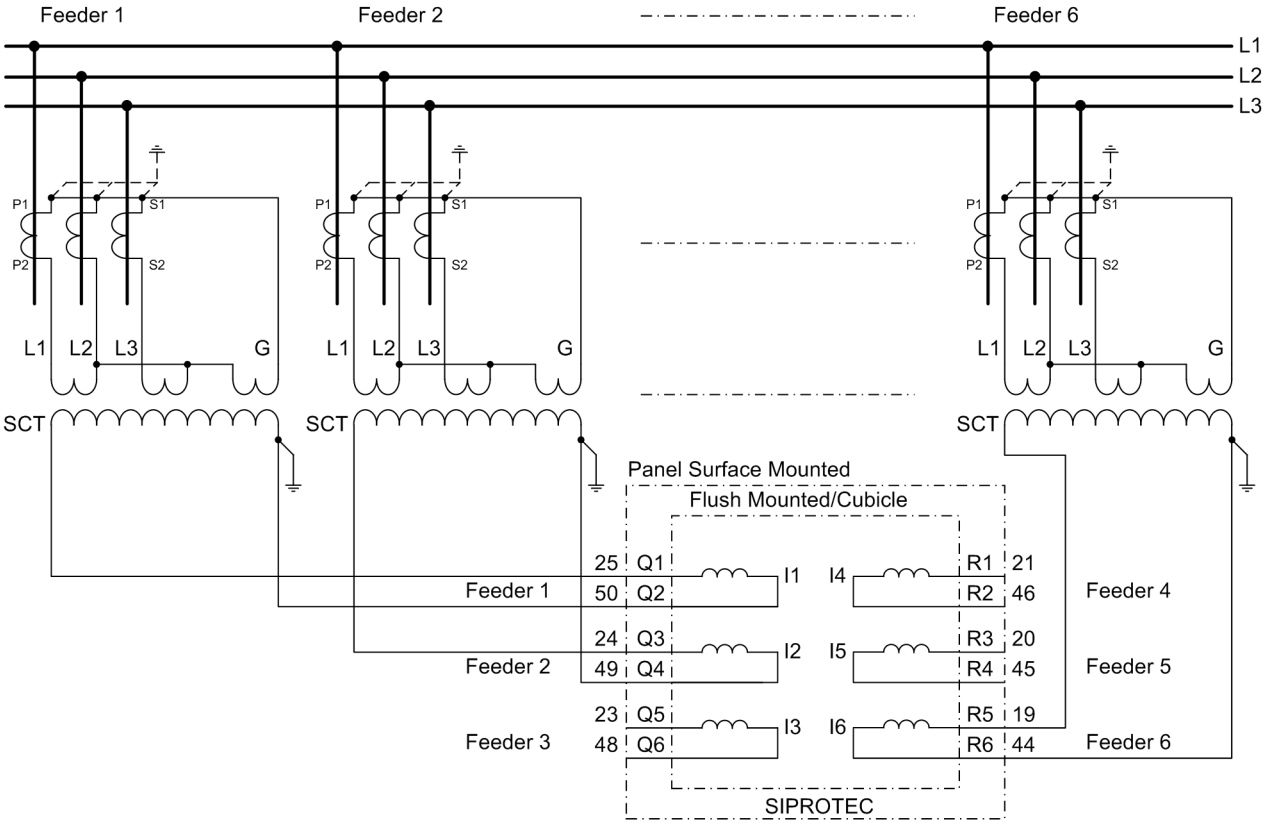

Figure A-26 Connection example 7UT613 as busbar protection for 6 feeders, connected via external summation transformers (SCT) — partial illustration for feeders 1, 2 and 6

A.3.2 Voltage Transformer Connection Examples

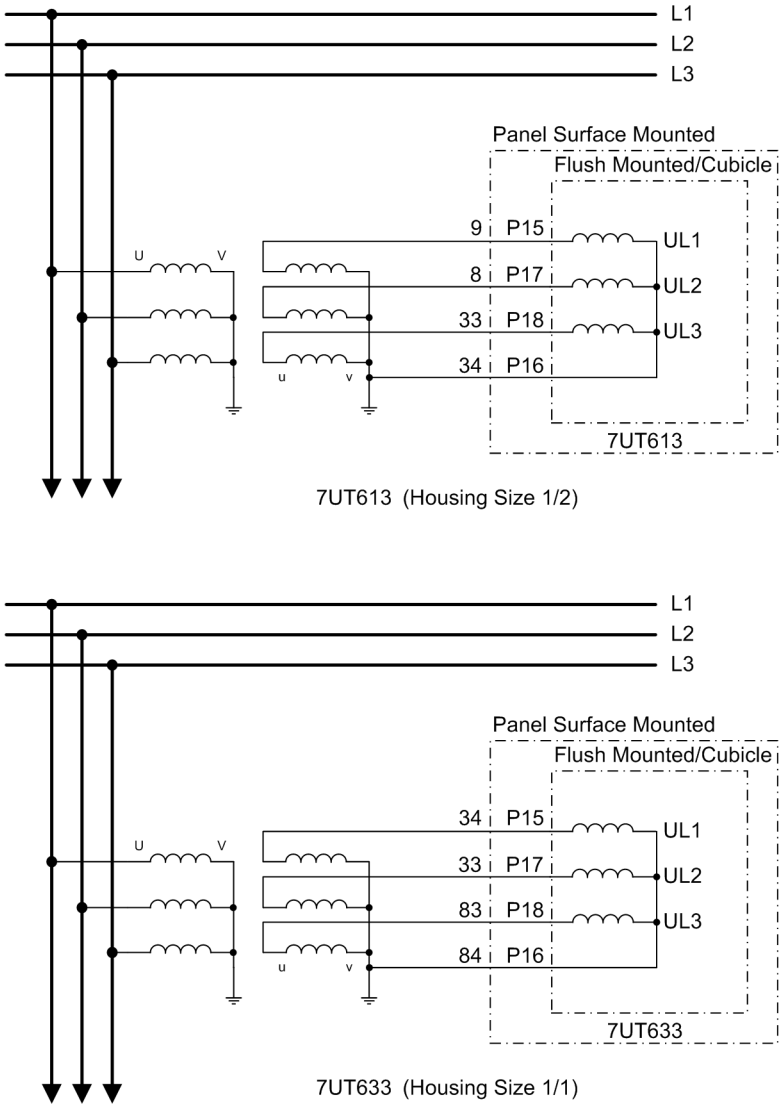

Figure A-27 Voltage connections to three wye-connected voltage transformers (only in 7UT613 and 7UT633)

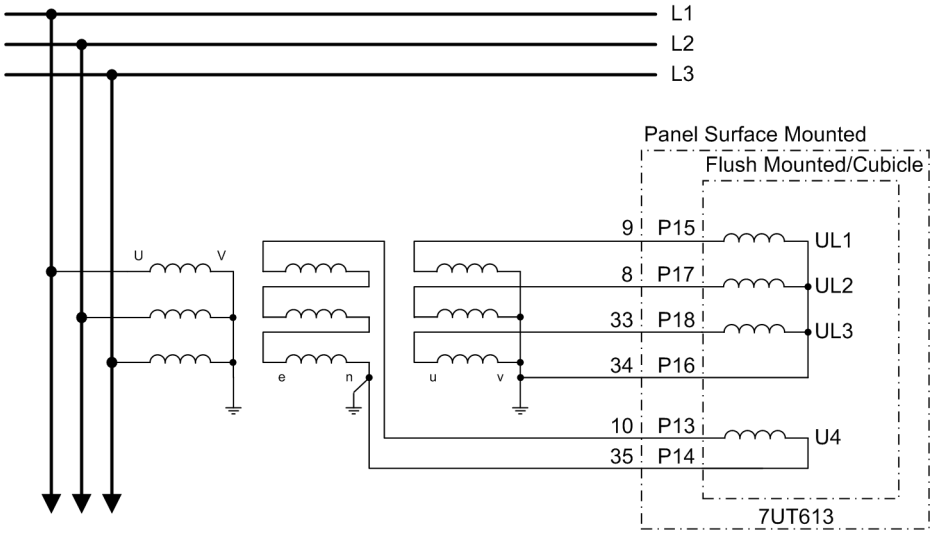

7UT613 (Housing Size 1/2)

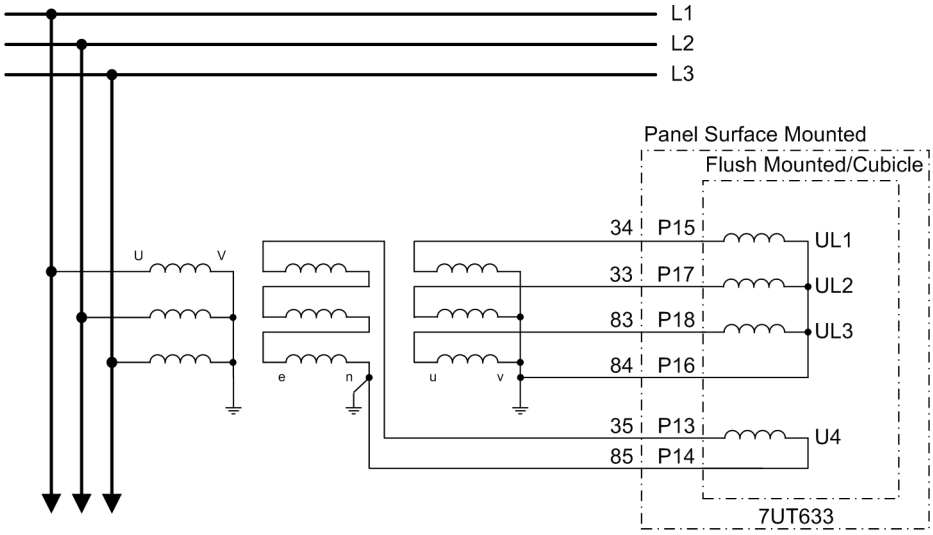

7UT633 (Housing Size 1/1)

Figure A-28 Voltage connections to three wye-connected voltage transformers with additional open-delta windings (e-n–windings; only in 7UT613 and 7UT633)

A.3.3 Assignment of Protection Functions to Protected Objects

Not every protection function implemented in the 7UT613/63x is useful or even possible for every conceivable protected object. The following table shows which protection functions are possible for which protected objects. Once a protected object has been configured (as described in subsection 2.1.3), only those protection functions are allowed and settable that are valid according to the table below.

Protection function	Three-phase transformer	Single-phase transformer	Auto-transformer	Generator/ motor	Busbar, 3-phase	Busbar, 1-phase
Differential protection	X	X	X	X	X	X
Restricted Earth fault Protection	X	X	X	X	—	—
Overcurrent protection - phases	X	X	X	X	X	—
Overcurrent protection 3IO	X	—	X	X	X	—
Overcurrent protection earth	X	X	X	X	X	X
Overcurrent protection 1-phase	X	X	X	X	X	X
Unbalanced load protection	X	—	X	X	X	—
Overload protection IEC 60255-8	X	X	X	X	X	—
Overload protection IEC 60354	X	X	X	X	X	—
Overexcitation protection	X	X	X	X	X	—
Reverse power protection	X	—	X	X	X	—
Forward power protection	X	—	X	X	X	—
Undervoltage protection	X	—	X	X	X	—
Overvoltage protection	X	—	X	X	X	—
Frequency protection	X	—	X	X	X	—
Breaker failure protection	X	X	X	X	X	—
Measured value monitoring	X	X	X	X	X	X
Trip circuit supervision	X	X	X	X	X	X
Direct external trip command 1	X	X	X	X	X	X
Direct external trip command 2	X	X	X	X	X	X
Operational measured values	X	X	X	X	X	X
Legend:	X Function available			— Function not available		

Figure A-29 Utilisation of the protective functions in different protected objects

A.4 Current Transformer Requirements

Formula symbols/terms used (in accordance with IEC 60044-6, as defined)

K_{ssc}	= rated symmetrical short-circuit current factor (example: CT 5P20 $\rightarrow$ K_{SSC} = 20)
K'_{ssc}	= effective symmetrical short-circuit current factor
K_{td}	= rated transient dimensioning factor
$I_{scc\ max\ (ext.\ fault)}$	= maximum symmetrical through flowing fault current
I_{pn}	= CT rated primary current
I_{sn}	= CT rated secondary current
R_{ct}	= secondary winding d.c. resistance at 75 °C (or other specified temperature)
R_b	= rated resistive burden
R'_b	= R_{lead} + R_{relay} = connected resistive burden
T_p	= primary time constant (net time constant)
V_k	= knee-point voltage in V (r.m.s.)
R_{relay}	= relay burden

$$R_{lead} = \frac{2 \cdot \rho \cdot l}{A}$$

with:

l	= single conductor length from CT to relay in m
ρ	= specified resistance = 0.0175 Ω mm^2/m (copper wires) at 20 °C (or other specified temperature)
A	conductor cross-section in mm^2

The transient rated dimensioning factor K_{td} depends on the device version and the primary time constant T_p. For the devices 7UT613/63x with a required saturation-free time of only $^1/_4$ period, the influence of T_p is negligible.

For CT's that are defined by the rated symmetrical short-circuit current factor K_{ssc} and the rated burden R_b (e.g. 5P, 10P), the effective K'_{ssc} can be calculated by the formula:

$$K'_{ssc} = K_{ssc} \cdot \frac{R_{ct} + R_b}{R_{ct} + R'_b}$$

The minimum required K'_{ssc} can be calculated by the formula:

$$K'_{ssc} \geq K_{td} \cdot \frac{I_{scc\ max\ (ext.\ fault)}}{I_{pn}}$$

Condition: K'_{ssc} (required) $\leq$ K'_{ssc} (r.m.s.)

Current Transformer in accordance with BS 3938/IEC 60044-1 (2000)

The values of an IEC class P transformer can be converted to the values for an IEC class PX (BS class X) transformer by using the following formula:

$$U_{knee} = \frac{(R_b + R_{ct}) \cdot I_{sn} \cdot K_{ssc}}{1.3}$$

Example: IEC 60044: 600/1, 5P10, 15VA, $R_{ct} = 4\ \Omega$

IEC PX or BS class X:

$$U_{knee} = \frac{(15 + 4) \cdot 1 \cdot 10}{1.3}\ V = 146\ V,\ R_{ct} = 4\ \Omega$$

Current Transformer in accordance with ANSI/IEEE C 57.13

Class C of this standard defines the CT by its secondary terminal voltage at 20 times rated current, for which the ratio error shall not exceed 10%. Standard classes are C100, C200, C400 and C800 for 5A rated secondary current.

The approximate terminal voltage can be derived from the IEC values, as follows:

ANSI transformer definition

$U_{s.t.max} = 20 \bullet 5A \bullet R_b \bullet K_{ssc}/20$

with:

$R_b = P_b/I_{sn}^2$ and $I_{sn} = 5A$

one derives at

$U_{s.t.max} = P_b \bullet K_{ssc}/5A$

Example: IEC 60044: 600/5, 5P20, 25VA

ANSI C57.13:

$U_{s.t.max} = 25VA \bullet 20/5A = 100V$, in accordance with class C100

Relay type	transient dimensioning factor K_{td}			minimum required factor K'_{ssc}	min. required kneepoint voltage
7UT613/63x	Transf. 3	BB/line 3	Gen./Motor 5	$K'_{ssc} \geq K_{td} \cdot \frac{I_{scc\ max\ (ext.\ fault)}}{I_{pn}}$	$U_{knee} \geq K_{td} \cdot \frac{I_{scc\ max\ (ext.\ fault)}}{1.3 \cdot I_{pn}} \cdot (R_{ct} + R'_b) \cdot I_{sn}$

The calculations listed above are simplified in order to facilitate a quick and safe CT calculation/verification. An accurate calculation/verification can be carried out with the Siemens CTDIM program as from V3.21. The results of the CTDIM program have been released by the device manufacturer.

Mismatching factor for 7UT613/63x, (limited resolution of the measurement)

$$F_{Adap} = \frac{I_{pn}}{I_{nO}} \cdot \frac{I_{Nrelay}}{I_{sn}} = \frac{I_{pn} \cdot \sqrt{3} \cdot U_{nO}}{S_{Nmax}} \cdot \frac{I_{Nrelay}}{I_{sn}} \rightarrow \text{Request: } \frac{1}{8} \leq F_{Adap} \leq 8$$

where:

I_{nO} = rated current of the protected object
(in relation to the parameterised rated current)

U_{nO} = parameterised rated current of the protected object

I_{Nrelay} = nominal device current

S_{Nmax} = maximum (rated) power of the protected object
(for transformers: side with the largest (rated) load)

Caution: If earth fault differential protection is used, the requirement for the phase current transformer of the REF side is as follows: $^1/_4 \leq F_{Adap} \leq 4$, (for the starpoint transformer remains $^1/_8 \leq F_{Adap} \leq 8$)

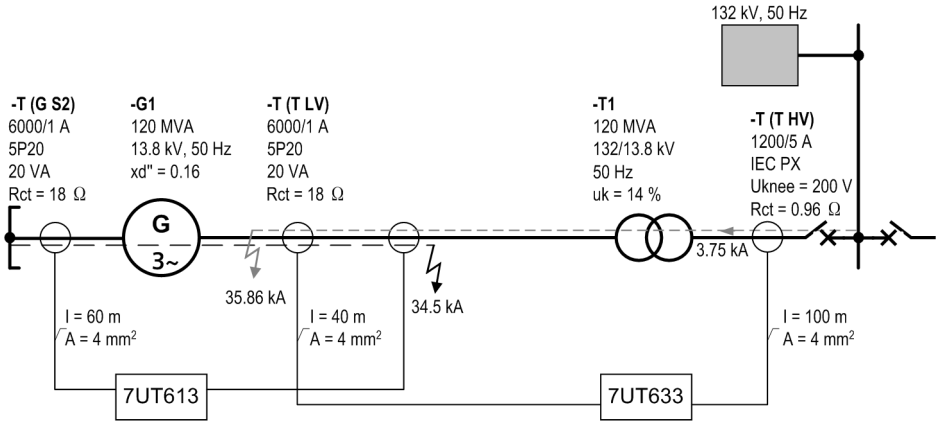

Figure A-30 CT verification for Devices 7UT613/63x

The CB layout within the power station unit is not specified.

x''_d = sub-transient direct-axis reactance of the generator in p.u.

U_k = transformer short-circuit voltage HV - LV in %

R_{relay} = assumed with 0.1 Ω, (the consumption of the above devices is below 0.1 VA)

-T (G S2), 7UT613	-T (T LV), 7UT633	-T (T HV), 7UT633
$I_{scc\ max\ (ext.\ fault)} = \frac{c \cdot S_{NG}}{\sqrt{3} \cdot U_{NG} \cdot x''_d}$ $= \frac{1{,}1 \cdot 120000\ kVA}{\sqrt{3} \cdot 13.8\ kV \cdot 0.16} = 34516\ A$	$I_{scc\ max\ (ext.\ fault)} = \frac{S_{NT}}{\sqrt{3} \cdot U_{NT} \cdot u_k}$ $= \frac{120000\ kVA}{\sqrt{3} \cdot 13.8\ kV \cdot 0.14} = 35860\ A$	$I_{scc\ max\ (ext.\ fault)} = \frac{S_{NT}}{\sqrt{3} \cdot U_{NT} \cdot u_k}$ $= \frac{120000\ kVA}{\sqrt{3} \cdot 132\ kV \cdot 0.14} = 3749\ A$
$K_{td} = 5$ (from table above)	$K_{td} = 3$ (from table above)	$K_{td} = 3$ (from table above)
$K'_{ssc} \geq K_{td} \cdot \frac{I_{scc\ max\ (ext.\ fault)}}{I_{pn}}$ $= 5 \cdot \frac{34516\ A}{6000\ A} = 28.8$	$K'_{ssc} \geq K_{td} \cdot \frac{I_{scc\ max\ (ext.\ fault)}}{I_{pn}}$ $= 3 \cdot \frac{35860\ A}{6000\ A} = 35.9$	
$R_b = \frac{S_n}{I_{sn}^2} = \frac{20\ VA}{1\ A^2} = 20\ \Omega$	$R_b = \frac{S_n}{I_{sn}^2} = \frac{20\ VA}{1\ A^2} = 20\ \Omega$	
$R'_b = R_{lead} + R_{relay}$ $= \frac{2 \cdot \rho \cdot I}{A} + 0.1\ \Omega$ $= \frac{2 \cdot 0.0175 \frac{\Omega mm^2}{m} \cdot 60\ m}{4\ mm^2} + 0.1\ \Omega$ $= 0.625\ \Omega$	$R'_b = R_{lead} + R_{relay}$ $= \frac{2 \cdot \rho \cdot I}{A} + 0.1\ \Omega$ $= \frac{2 \cdot 0.0175 \frac{\Omega mm^2}{m} \cdot 40\ m}{4\ mm^2} + 0.1\ \Omega$ $= 0.450\ \Omega$	$R'_b = R_{lead} + R_{relay}$ $= \frac{2 \cdot \rho \cdot I}{A} + 0.1\ \Omega$ $= \frac{2 \cdot 0.0175 \frac{\Omega mm^2}{m} \cdot 100\ m}{4\ mm^2} + 0.1\ \Omega$ $= 0.975\ \Omega$
$K'_{ssc} = K_{ssc} \cdot \frac{R_{ct} + R_b}{R_{ct} + R'_b}$ $= 20 \cdot \frac{18\ \Omega + 20\ \Omega}{18\ \Omega + 0.625\ \Omega} = 40.8$	$K'_{ssc} = K_{ssc} \cdot \frac{R_{ct} + R_b}{R_{ct} + R'_b}$ $= 20 \cdot \frac{18\ \Omega + 20\ \Omega}{18\ \Omega + 0.450\ \Omega} = 41.2$	$U_{knee} \geq K_{td} \cdot \frac{I_{scc\ max\ (ext.\ fault)}}{1.3 \cdot I_{pn}}$ $\cdot (R_{ct} + R'_b) \cdot I_{sn} = 3 \cdot \frac{3749\ A}{1.3 \cdot 1200\ A}$ $\cdot (0.96\ \Omega + 0.925\ \Omega) \cdot 5\ A$ $= 67.9\ V$
K'_{ssc} required = 28.8 K'_{ssc} effective = 40.8 28.8 < 40.8 → CT dimensioning is ok	K'_{ssc} required = 17.9 K'_{ssc} effective = 41.2 17.9 < 41.2 → CT dimensioning is ok	U_{knee} required = 67.9 V U_{knee} effective = 200 V 67.9 < 200 V → CT dimensioning is ok
$F_{Adap} = \frac{I_{pn} \cdot \sqrt{3} \cdot U_{nO}}{S_{Nmax}} \cdot \frac{I_{Nrelay}}{I_{sn}}$ $= \frac{6000\ A \cdot \sqrt{3} \cdot 13.8\ kV}{120000\ kVA} \cdot \frac{1\ A}{1\ A}$ $= 1.195$ $1/8 \leq 1.195 \leq 8 \rightarrow$ ok!	$F_{Adap} = \frac{I_{pn} \cdot \sqrt{3} \cdot U_{nO}}{S_{Nmax}} \cdot \frac{I_{Nrelay}}{I_{sn}}$ $= \frac{6000\ A \cdot \sqrt{3} \cdot 13.8\ kV}{120000\ kVA} \cdot \frac{1\ A}{1\ A}$ $= 1.195$ $1/8 \leq 1.195 \leq 8 \rightarrow$ ok!	$F_{Adap} = \frac{I_{pn} \cdot \sqrt{3} \cdot U_{nO}}{S_{Nmax}} \cdot \frac{I_{Nrelay}}{I_{sn}}$ $= \frac{1200\ A \cdot \sqrt{3} \cdot 132\ kV}{120000\ kVA} \cdot \frac{5\ A}{5\ A}$ $= 2.286$ $1/8 \leq 2.286 \leq 8 \rightarrow$ ok!

with:

c = voltage factor (for generators: 1,1)

S_{NO} = nominal power of the transformer in kVA

M

U_{NO} = nominal voltage of the transformer in kV

M

S_{NG} = nominal power of the generator in kVA

U_{NG} = nominal voltage of the generator in kV

A.5 Default Settings

When the device leaves the factory, a large number of LED indicators, binary inputs and outputs as well as function keys are already preset. They are summarized in the following tables.

A.5.1 LEDs

Table A-1 LED Indication Presettings

LEDs	Allocated Function	Function No.	Description
LED1	Relay TRIP	511	Relay GENERAL TRIP command
LED2	Relay PICKUP	501	Relay PICKUP
LED3	>Buchh. Trip	392	>Tripp. stage from Buchholz protection
LED4	no default setting	-	-
LED5	no default setting	-	-
LED6	no default setting	-	-
LED7	no default setting	-	-
LED8	no default setting	-	-
LED9	no default setting	-	-
LED10	no default setting	-	-
LED11	no default setting	-	-
LED12	no default setting	-	-
LED13	Error Sum Alarm Alarm Sum Event	140 160	Error with a summary alarm Alarm Summary Event
LED14	FaultConfig/Set	311	Fault in configuration / setting

A.5.2 Binary Input

Table A-2 Binary input presettings for all devices and ordering variants

Binary Input	Allocated Function	Function No.	Description
BI1	>Reset LED	5	>Reset LED
BI2	>Buchh. Trip	392	>Tripp. stage from Buchholz protection

A.5.3 Binary Output

Table A-3 Output relay presettings for all devices and ordering variants

Binary Output	Allocated Function	Function No.	Description
BO1	Relay TRIP	511	Relay GENERAL TRIP command
BO2	Relay PICKUP	501	Relay PICKUP
BO3	>Buchh. Trip	392	>Tripp. stage from Buchholz protection
BO4	Error Sum Alarm Alarm Sum Event	140 160	Error with a summary alarm Alarm Summary Event

A.5.4 Function Keys

Table A-4 Applies to all devices and ordered variants

Function Keys	Allocated Function	Function No.	Description
F1	Display of operational instructions	-	-
F2	Display of primary operational measured values	-	-
F3	An overview of the last 8 network faults	-	-
F4	>QuitG-TRP Resetting the reclosure interlocking	- 	>Quitt Lock Out: General Trip -

A.5.5 Default Display

For devices with a four-line display, you can scroll among the basic displays shown below. The numerical values shown are examples. The device will display only those values that make sense for the current application. For instance, voltages will only be shown if the device is provided with voltage inputs and these inputs have been configured; with single-phase transformers there will be no phase L2.

Three-phase Protection Device

```
Pri  Side1      Side2
L1   200A      2.00kA
L2   200A      2.00kA
L3   200A      2.00kA
```

```
Pri  Side1      Side3
L1   200A       525A
L2   200A       525A
L3   200A       525A
```

```
%    Side1      Side2
L1   100.0      100.0
L2   100.0      100.0
L3   100.0      100.0
```

```
%    Side1      Side3
L1   100.0      100.0
L2   100.0      100.0
L3   100.0      100.0
```

```
U       Pri        %
L1    63.5kV    100.0
L2    63.5kV    100.0
L3    63.5kV    100.0
```

```
       Diff       Stab
L1     0.00       2.00
L2     0.00       2.00
L3     0.00       2.00
```

```
f= 50.0Hz cosφ= 1.00
S=     38.1MVA
P=     38.1MW
Q=      0.0MVAR
```

Single-phase Busbar Protection

```
Pri
I1= 200A    I4= 200A
I2= 200A    I5= 200A
I3= 200A    I6= 200A
```

```
Pri
I7= 200A    f= 50.0Hz
I8= 200A
I9= 200A
```

```
%
I1= 100.0   I4= 100.0
I2= 100.0   I5= 100.0
I3= 100.0   I6= 100.0
```

```
%
I7= 100.0
I8= 100.0
I9= 100.0
```

```
U      Pri         %
L1    63.5kV    100.0
L2    63.5kV    100.0
L3    63.5kV    100.0
```

```
              Diff Stab
L1    1.00       2.00
L2 *)
L3 *)
```

Figure A-31 Default display for 4-line display

*) depending on the phase connected (address 396 **PHASE SELECTION**)

For devices with a graphic display, the basic displays shown below may appear: The device will display only those values that make sense for the current application. For instance, voltages and powers will only be shown if the device is provided with voltage inputs and these inputs have been configured; with single-phase transformers there will be no phase L2.

Three-phase Protection Device

```
DEFAULT DISPLAY
I    |  Pri          %
-----|-------------------
L1S1 |   200A      100.0
L2S1 |   200A      100.0
L3S1 |   200A      100.0
L1S2 |  2.00kA     100.0
L2S2 |  2.00kA     100.0
L3S2 |  2.00kA     100.0
L1S3 |   525A      100.0
L2S3 |   525A      100.0
L3S3 |   525A      100.0
L1S4 |   525A      100.0
L2S4 |   525A      100.0
L3S4 |   525A      100.0
L1S5 |   525A      100.0
L2S5 |   525A      100.0
L3S5 |   525A      100.0

U    |  Pri          %
-----|-------------------
L1E  |  63.5kV     100.0
L2E  |  63.5kV     100.0
L3E  |  63.5kV     100.0

     |  Diff        Stab
-----|-------------------
L1   |   0.00       2.00
L2   |   0.00       2.00
L3   |   0.00       2.00

f= 50.0Hz cosφ= 1.00
S=      38.1MVA
P=      38.1MW
Q=       0.0MVAR
```

Single-phase Busbar Protection

```
DEFAULT DISPLAY
I    |  Pri          %
-----|-------------------
I1   |   200A      100.0
I2   |   200A      100.0
I3   |   200A      100.0
I4   |   200A      100.0
I5   |   200A      100.0
I6   |   200A      100.0
I7   |   200A      100.0
I8   |   200A      100.0
I9   |   200A      100.0
I10  |   200A      100.0
I11  |   200A      100.0
I12  |   200A      100.0

U    |  Pri          %
-----|-------------------
L1E  |  63.5kV     100.0
L2E  |  63.5kV     100.0
L3E  |  63.5kV     100.0

     |  Diff        Stab
-----|-------------------
L1   |   0.00       2.00
L2   |   *)
L3   |   *)

f= 50.0Hz
```

Figure A-32 Basic graphic displays

*) depending on the phase connected (address 396 **PHASE SELECTION**)

A.5.6 Pre-defined CFC Charts

On delivery of the SIPROTEC 4 device provides worksheets with preset CFC-charts.

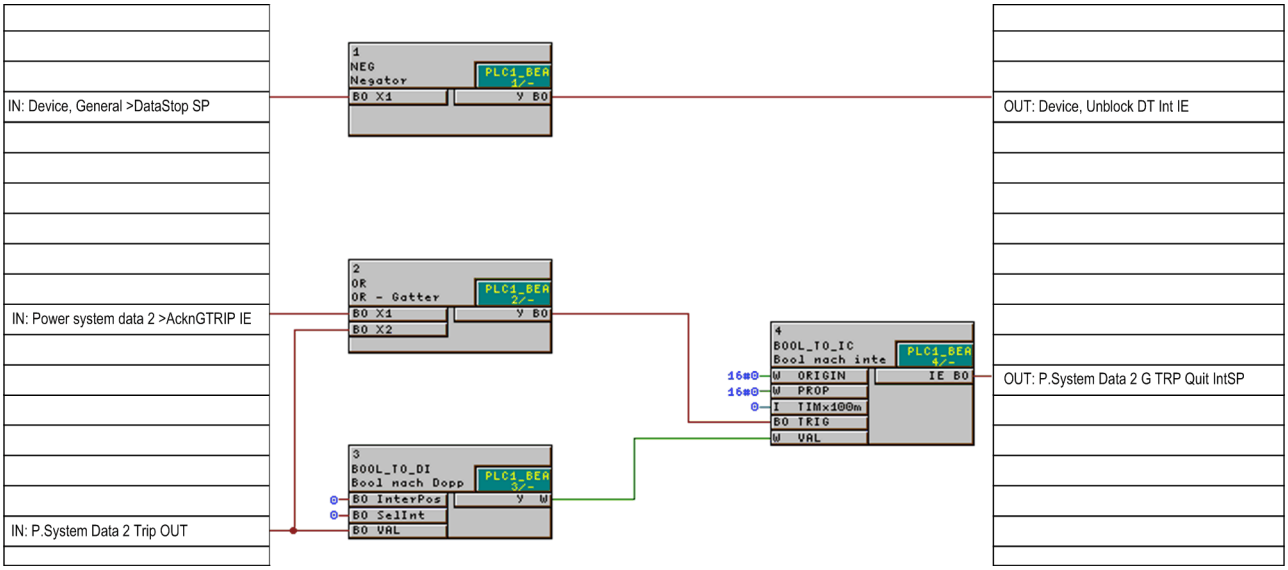

Figure A-33 CFC Charts for Transmission Block and Reclosure Interlocking

The first chart converts the binary input „>DataStop“ from a single-point indication (SP) into an internal single-point indication (IM).

The second chart implements a reclosure interlocking feature which prevents a reclosure of the circuit breaker following a device trip until the trip has been acknowledged manually.

Note

„G-TRP QUITTIE“ must be allocated in addition to a trip relay!

A.6 Protocol-dependent Functions

Protocol → / Function ↓	IEC 60870-5-103	IEC 61850 Ethernet (EN100)	PROFIBUS FMS	PROFIBUS DP	DNP3.0	Modbus ASCII/RTU	Additional Service interface (optional)
Operational Measured values	Yes (fixed values)	Yes	Yes	Yes	Yes	Yes	Yes
Metered Values	Yes	Yes	Yes	Yes	Yes	Yes	Yes
Fault Recording	Yes	Yes	Yes	No. Only via additional service interface	No. Only via additional service interface	No. Only via additional service interface	Yes
Remote relay setting	No. Only via additional interface	No. Only via additional interface	Yes	No. Only via additional service interface	No. Only via additional service interface	No. Only via additional service interface	Yes
User-defined annunciations and switching objects	Yes	Yes	Yes	User-defined annunciations in CFC	User-defined annunciations in CFC	User-defined annunciations in CFC	Yes
Time synchronisation	Via protocol; DCF77/IRIG B; Interface; Binary input	Via protocol (NTP); DCF77/IRIG B; Interface; Binary input	Via protocol; DCF77/IRIG B; interface;binary input	Via protocol; DCF77/IRIG B; Interface; Binary input	Via protocol; DCF77/IRIG B; Interface; Binary input	Via DCF77/IRIG B; Interface; Binary input	-
Annunciations with time stamp	Yes	Yes	Yes	Yes	Yes	No	Yes
Commissioning tools							
Indication measured value blocking	Yes	Yes	Yes	No	No	No	Yes
Generation of test annunciations (DIGSI)	Yes	Yes	Yes	No	No	No	Yes
Physical properties							
Mode	Asynchronous	Synchronous	Asynchronous	Asynchronous	Asynchronous	Asynchronous	-
Transmission mode	Cyclical/event	Cyclical/event	Cyclical/event	Cyclical	Cyclical/event	Cyclical	-
Baud rate	4800 to 38400	up to 100 Mbaud	up to 1.5 Mbaud	up to 1.5 Mbaud	2400 to 19200	2400 to 19200	2400 to 38400
Connection to device	Electrical: RS232 RS485 optical: ST connector	Ethernet TP	Electrical: RS485 optical: ST connector (single or double ring)	Electrical: RS485 optical: ST connector (double ring)	Electrical: RS485 optical: ST connector	Electrical: RS485 optical: ST connector	Electrical: RS232 RS485 optical. ST connector
RTD-box 7XV5662-xAD							Yes

A.7 Functional Scope

Addr.	Parameter	Setting Options	Default Setting	Comments
103	Grp Chge OPTION	Disabled Enabled	Disabled	Setting Group Change Option
105	PROT. OBJECT	3 phase transf. 1 phase transf. Autotransf. Autotr. node Generator/Motor 3ph Busbar 1ph Busbar	3 phase transf.	Protection Object
112	DIFF. PROT.	Disabled Enabled	Enabled	Differential Protection
113	REF PROT.	Disabled Enabled	Disabled	Restricted earth fault protection
114	REF PROT. 2	Disabled Enabled	Disabled	Restricted earth fault protection 2
117	COLDLOAD PICKUP	Disabled Enabled	Disabled	Cold Load Pickup
120	DMT/IDMT Phase	Disabled Definite Time TOC IEC TOC ANSI User Defined PU User def. Reset	Disabled	DMT / IDMT Phase
122	DMT/IDMT 3I0	Disabled Definite Time TOC IEC TOC ANSI User Defined PU User def. Reset	Disabled	DMT / IDMT 3I0
124	DMT/IDMT Earth	Disabled Definite Time TOC IEC TOC ANSI User Defined PU User def. Reset	Disabled	DMT / IDMT Earth
127	DMT 1PHASE	Disabled Enabled	Disabled	DMT 1Phase
130	DMT/IDMT Phase2	Disabled Definite Time TOC IEC TOC ANSI User Defined PU User def. Reset	Disabled	DMT / IDMT Phase 2
132	DMT/IDMT Phase3	Disabled Definite Time TOC IEC TOC ANSI User Defined PU User def. Reset	Disabled	DMT / IDMT Phase 3

Addr.	Parameter	Setting Options	Default Setting	Comments
134	DMT/IDMT 3I0 2	Disabled Definite Time TOC IEC TOC ANSI User Defined PU User def. Reset	Disabled	DMT / IDMT 3I0 2
136	DMT/IDMT 3I0 3	Disabled Definite Time TOC IEC TOC ANSI User Defined PU User def. Reset	Disabled	DMT / IDMT 3I0 3
138	DMT/IDMT Earth2	Disabled Definite Time TOC IEC TOC ANSI User Defined PU User def. Reset	Disabled	DMT / IDMT Earth 2
140	UNBALANCE LOAD	Disabled Definite Time TOC IEC TOC ANSI DT/thermal	Disabled	Unbalance Load (Negative Sequence)
142	THERM. OVERLOAD	Disabled th rep w.o. sen th repl w. sens IEC354	Disabled	Thermal Overload Protection
143	OVEREXC. PROT.	Disabled Enabled	Disabled	Overexcitation Protection (U/f)
144	THERM.OVERLOAD2	Disabled th rep w.o. sen th repl w. sens IEC354	Disabled	Thermal Overload Protection 2
150	REVERSE POWER	Disabled Enabled	Disabled	Reverse Power Protection
151	FORWARD POWER	Disabled Enabled	Disabled	Forward Power Supervision
152	UNDERVOLTAGE	Disabled Enabled	Disabled	Undervoltage Protection
153	OVERVOLTAGE	Disabled Enabled	Disabled	Overvoltage Protection
156	FREQUENCY Prot.	Disabled Enabled	Disabled	Over / Underfrequency Protection
170	BREAKER FAILURE	Disabled Enabled	Disabled	Breaker Failure Protection
171	BREAKER FAIL. 2	Disabled Enabled	Disabled	Breaker Failure Protection 2
180	DISCON.MEAS.LOC	Disabled Enabled	Disabled	Disconnect measurment location
181	M.V. SUPERV	Disabled Enabled	Enabled	Measured Values Supervision
182	Trip Cir. Sup.	Disabled 2 Binary Inputs 1 Binary Input	Disabled	Trip Circuit Supervision

Addr.	Parameter	Setting Options	Default Setting	Comments
186	EXT. TRIP 1	Disabled Enabled	Disabled	External Trip Function 1
187	EXT. TRIP 2	Disabled Enabled	Disabled	External Trip Function 2
190	RTD-BOX INPUT	Disabled Port C Port D	Disabled	External Temperature Input
191	RTD CONNECTION	6 RTD simplex 6 RTD HDX 12 RTD HDX	6 RTD simplex	Ext. Temperature Input Connection Type

A.8 Settings

Addresses which have an appended "A" can only be changed with DIGSI, under Additional Settings.

The table indicates region-specific presettings. Column C (configuration) indicates the corresponding secondary nominal current of the current transformer.

Addr.	Parameter	Function	C	Setting Options	Default Setting	Comments
0	MEAS. QUANTITY	Flx		I-Meas Loc/side Curr. I1..I12 Curr. IZ1..IZ4 Voltage P forward P reverse Q forward Q reverse Power factor Frequency	I-Meas Loc/side	Selection of Measured Quantity
0	Func. assigned	Flx		Side 1 Side 2 Side 3 Side 4 Side 5 Measuring loc.1 Measuring loc.2 Measuring loc.3 Measuring loc.4 Measuring loc.5	Side 1	Function is applied to
0	Func. per phase	Flx		IL1..IL3 IL1 IL2 IL3 3I0 (Zero seq.) I1 (Pos. seq.) I2 (Neg. seq.)	IL1..IL3	Function utilises component(s)
0	Func. assigned	Flx		I-CT 1 I-CT 2 I-CT 3 I-CT 4 I-CT 5 I-CT 6 I-CT 7 I-CT 8 I-CT 9 I-CT 10 I-CT 11 I-CT 12	I-CT 1	Function is applied to
0	Func. assigned	Flx		AuxiliaryCT IX1 AuxiliaryCT IX2 AuxiliaryCT IX3 AuxiliaryCT IX4	AuxiliaryCT IX1	Function is applied to
0	Func. per phase	Flx		UL1E..UL3E UL1E UL2E UL3E UL12..UL31 UL12 UL23 UL31 U0 (Zero seq.) U1 (Pos. seq.) U2 (Neg. seq.) U4/Uen	UL1E..UL3E	Function utilises component(s)
0	PICKUP WITH	Flx		Exceeding Dropping below	Exceeding	Pickup with
0A	Type of meas.	Flx		accurate fast	accurate	Selection of type of measurement
0	FLEXIBLE FUNC.	Flx		OFF ON Alarm Only Block relay	OFF	Flexible Function

Addr.	Parameter	Function	C	Setting Options	Default Setting	Comments
0	Pick-up thresh.	Flx	1A 5A	0.05 .. 35.00 A 0.25 .. 175.00 A	2.00 A 10.00 A	Pick-up threshold I meas. location 1
0	Pick-up thresh.	Flx	1A 5A	0.05 .. 35.00 A 0.25 .. 175.00 A	2.00 A 10.00 A	Pick-up threshold I meas. location 2
0	Pick-up thresh.	Flx	1A 5A	0.05 .. 35.00 A 0.25 .. 175.00 A	2.00 A 10.00 A	Pick-up threshold I meas. location 3
0	Pick-up thresh.	Flx	1A 5A	0.05 .. 35.00 A 0.25 .. 175.00 A	2.00 A 10.00 A	Pick-up threshold I meas. location 4
0	Pick-up thresh.	Flx	1A 5A	0.05 .. 35.00 A 0.25 .. 175.00 A	2.00 A 10.00 A	Pick-up threshold I meas. location 5
0	Pick-up thresh.	Flx	1A 5A 0.1A	0.05 .. 35.00 A 0.25 .. 175.00 A 0.005 .. 3.500 A	2.00 A 10.00 A 0.200 A	Pick-up threshold I1
0	Pick-up thresh.	Flx	1A 5A 0.1A	0.05 .. 35.00 A 0.25 .. 175.00 A 0.005 .. 3.500 A	2.00 A 10.00 A 0.200 A	Pick-up threshold I2
0	Pick-up thresh.	Flx	1A 5A 0.1A	0.05 .. 35.00 A 0.25 .. 175.00 A 0.005 .. 3.500 A	2.00 A 10.00 A 0.200 A	Pick-up threshold I3
0	Pick-up thresh.	Flx	1A 5A 0.1A	0.05 .. 35.00 A 0.25 .. 175.00 A 0.005 .. 3.500 A	2.00 A 10.00 A 0.200 A	Pick-up threshold I4
0	Pick-up thresh.	Flx	1A 5A 0.1A	0.05 .. 35.00 A 0.25 .. 175.00 A 0.005 .. 3.500 A	2.00 A 10.00 A 0.200 A	Pick-up threshold I5
0	Pick-up thresh.	Flx	1A 5A 0.1A	0.05 .. 35.00 A 0.25 .. 175.00 A 0.005 .. 3.500 A	2.00 A 10.00 A 0.200 A	Pick-up threshold I6
0	Pick-up thresh.	Flx	1A 5A 0.1A	0.05 .. 35.00 A 0.25 .. 175.00 A 0.005 .. 3.500 A	2.00 A 10.00 A 0.200 A	Pick-up threshold I7
0	Pick-up thresh.	Flx	1A 5A 0.1A	0.05 .. 35.00 A 0.25 .. 175.00 A 0.005 .. 3.500 A	2.00 A 10.00 A 0.200 A	Pick-up threshold I8
0	Pick-up thresh.	Flx	1A 5A 0.1A	0.05 .. 35.00 A 0.25 .. 175.00 A 0.005 .. 3.500 A	2.00 A 10.00 A 0.200 A	Pick-up threshold I9
0	Pick-up thresh.	Flx	1A 5A 0.1A	0.05 .. 35.00 A 0.25 .. 175.00 A 0.005 .. 3.500 A	2.00 A 10.00 A 0.200 A	Pick-up threshold I10
0	Pick-up thresh.	Flx	1A 5A 0.1A	0.05 .. 35.00 A 0.25 .. 175.00 A 0.005 .. 3.500 A	2.00 A 10.00 A 0.200 A	Pick-up threshold I11
0	Pick-up thresh.	Flx	1A 5A 0.1A	0.05 .. 35.00 A 0.25 .. 175.00 A 0.005 .. 3.500 A	2.00 A 10.00 A 0.200 A	Pick-up threshold I12
0	Pick-up thresh.	Flx	1A 5A	0.05 .. 35.00 A 0.25 .. 175.00 A	2.00 A 10.00 A	Pick-up threshold IZ1
0	Pick-up thresh.	Flx	1A 5A	0.05 .. 35.00 A 0.25 .. 175.00 A	2.00 A 10.00 A	Pick-up threshold IZ2
0	Pick-up thresh.	Flx	1A 5A	0.05 .. 35.00 A 0.25 .. 175.00 A	2.00 A 10.00 A	Pick-up threshold IZ3
0	Pick-up thresh.	Flx	1A 5A	0.05 .. 35.00 A 0.25 .. 175.00 A	2.00 A 10.00 A	Pick-up threshold IZ4
0	Pick-up thresh.	Flx		0.001 .. 1.500 A	0.100 A	Pick-up threshold IZ3 sens.
0	Pick-up thresh.	Flx		0.001 .. 1.500 A	0.100 A	Pick-up threshold IZ4 sens.
0	Pick-up thresh.	Flx		0.05 .. 35.00 I/InS	2.00 I/InS	Pick-up threshold I-side
0	P.U. THRESHOLD	Flx		1.0 .. 170.0 V	110.0 V	Pickup Threshold
0	P.U. THRESHOLD	Flx		1.0 .. 170.0 V	110.0 V	Pickup Threshold
0	P.U. THRESHOLD	Flx		40.00 .. 66.00 Hz	51.00 Hz	Pickup Threshold
0	P.U. THRESHOLD	Flx		10.00 .. 22.00 Hz	18.00 Hz	Pickup Threshold
0	P.U. THRESHOLD	Flx	1A 5A	1.7 .. 3000.0 W 8.5 .. 15000.0 W	200.0 W 1000.0 W	Pickup Threshold
0	Pick-up thresh.	Flx		0.01 .. 17.00 P/SnS	1.10 P/SnS	Pick-up threshold P-side
0	Pick-up thresh.	Flx	1A 5A	1.7 .. 3000.0 VAR 8.5 .. 15000.0 VAR	200.0 VAR 1000.0 VAR	Pick-up threshold Q meas. location

Addr.	Parameter	Function	C	Setting Options	Default Setting	Comments
0	Pick-up thresh.	Flx		0.01 .. 17.00 Q/SnS	1.10 Q/SnS	Pick-up threshold Q-side
0	P.U. THRESHOLD	Flx		-0.99 .. 0.99	0.50	Pickup Threshold
0	T TRIP DELAY	Flx		0.00 .. 3600.00 sec	1.00 sec	Trip Time Delay
0A	T PICKUP DELAY	Flx		0.00 .. 60.00 sec	0.00 sec	Pickup Time Delay
0A	T DROPOUT DELAY	Flx		0.00 .. 60.00 sec	0.00 sec	Dropout Time Delay
0A	BLOCKED BY FFM	Flx		YES NO	YES	Block in case of Meas.-Voltage Loss
0A	Blk I brkn cond	Flx		YES NO	YES	Block for broken conductor in CT path
0A	DROPOUT RATIO	Flx		0.70 .. 0.99	0.95	Dropout Ratio
0A	DROPOUT RATIO	Flx		1.01 .. 3.00	1.05	Dropout Ratio
0	Function	addMV		MinMax Dmd Min/Max/Dmd Dmd+MiMaD MiMa/Dmd+MiMaD	MinMax	Scope of the extended measuring values
0	Input Meas. Val	addMV		(Setting options depend on configuration)	None	Input measured value
0	Reset Meas. Val	addMV		(Setting options depend on configuration)	>Reset MinMax	Reset of ext. meas. values in progress
201	FltDisp.LED/LCD	Device		Target on PU Target on TRIP	Target on PU	Fault Display on LED / LCD
202	Spont. FltDisp.	Device		NO YES	NO	Spontaneous display of flt.annunciations
204	Start image DD	Device		image 1 image 2 image 3 image 4 image 5 image 6 image 7	image 1	Start image Default Display
211	No Conn.MeasLoc	P.System Data 1		2 3 4 5	3	Number of connected Measuring Locations
212	No AssigMeasLoc	P.System Data 1		2 3 4 5	3	Number of assigned Measuring Locations
213	NUMBER OF SIDES	P.System Data 1		2 3 4 5	3	Number of Sides
216	NUMBER OF ENDS	P.System Data 1		3 4 5 6 7 8 9 10 11 12	6	Number of Ends for 1 Phase Busbar
220	ASSIGNM. 2M,2S	P.System Data 1		M1,M2	M1,M2	Assignment at 2 assig.Meas.Loc./ 2 Sides
221	ASSIGNM. 3M,2S	P.System Data 1		M1+M2,M3 M1,M2+M3	M1+M2,M3	Assignment at 3 assig.Meas.Loc./ 2 Sides
222	ASSIGNM. 3M,3S	P.System Data 1		M1,M2,M3	M1,M2,M3	Assignment at 3 assig.Meas.Loc./ 3 Sides
223	ASSIGNM. 4M,2S	P.System Data 1		M1+M2,M3+M4 M1+M2+M3,M4 M1,M2+M3+M4	M1+M2,M3+M4	Assignment at 4 assig.Meas.Loc./ 2 Sides
224	ASSIGNM. 4M,3S	P.System Data 1		M1+M2,M3,M4 M1,M2+M3,M4 M1,M2,M3+M4	M1+M2,M3,M4	Assignment at 4 assig.Meas.Loc./ 3 Sides
225	ASSIGNM. 4M,4S	P.System Data 1		M1,M2,M3,M4	M1,M2,M3,M4	Assignment at 4 assig.Meas.Loc./ 4 Sides

Addr.	Parameter	Function	C	Setting Options	Default Setting	Comments
226	ASSIGNM. 5M,2S	P.System Data 1		M1+M2+M3,M4+M5 M1+M2,M3+M4+M5 M1+M2+M3+M4,M5 M1,M2+M3+M4+M5	M1+M2+M3,M4+M5	Assignment at 5 as-sig.Meas.Loc./ 2 Sides
227	ASSIGNM. 5M,3S	P.System Data 1		M1+M2,M3+M4,M5 M1+M2,M3,M4+M5 M1,M2+M3,M4+M5 M1+M2+M3,M4,M5 M1,M2+M3+M4,M5 M1,M2,M3+M4+M5	M1+M2,M3+M4,M5	Assignment at 5 as-sig.Meas.Loc./ 3 Sides
228	ASSIGNM. 5M,4S	P.System Data 1		M1+M2,M3,M4,M5 M1,M2+M3,M4,M5 M1,M2,M3+M4,M5 M1,M2,M3,M4+M5	M1+M2,M3,M4,M5	Assignment at 5 as-sig.Meas.Loc./ 4 Sides
229	ASSIGNM. 5M,5S	P.System Data 1		M1,M2,M3,M4,M5	M1,M2,M3,M4,M5	Assignment at 5 as-sig.Meas.Loc./ 5 Sides
230	ASSIGNM. ERROR	P.System Data 1		No AssigMeasLoc No of sides	without	Assignment Error
241	SIDE 1	P.System Data 1		auto-connected	auto-connected	Side 1 is assigned to
242	SIDE 2	P.System Data 1		auto-connected	auto-connected	Side 2 is assigned to
243	SIDE 3	P.System Data 1		auto-connected compensation earth.electrode	auto-connected	Side 3 is assigned to
244	SIDE 4	P.System Data 1		auto-connected compensation earth.electrode	compensation	Side 4 is assigned to
251	AUX. CT IX1	P.System Data 1		Not connected conn/not assig. Side 1 earth Side 2 earth Side 3 earth Side 4 earth MeasLoc.1 earth MeasLoc.2 earth MeasLoc.3 earth MeasLoc.4 earth	Not connected	Auxiliary CT IX1 is used as
252	AUX. CT IX2	P.System Data 1		Not connected conn/not assig. Side 1 earth Side 2 earth Side 3 earth Side 4 earth MeasLoc.1 earth MeasLoc.2 earth MeasLoc.3 earth MeasLoc.4 earth	Not connected	Auxiliary CT IX2 is used as
253	AUX. CT IX3	P.System Data 1		Not connected conn/not assig. Side 1 earth Side 2 earth Side 3 earth Side 4 earth MeasLoc.1 earth MeasLoc.2 earth MeasLoc.3 earth MeasLoc.4 earth	Not connected	Auxiliary CT IX3 is used as
254	AUX. CT IX4	P.System Data 1		Not connected conn/not assig. Side 1 earth Side 2 earth Side 3 earth Side 4 earth Side 5 earth MeasLoc.1 earth MeasLoc.2 earth MeasLoc.3 earth MeasLoc.4 earth MeasLoc.5 earth	Not connected	Auxiliary CT IX4 is used as
255	AUX CT IX3 TYPE	P.System Data 1		1A/5A input sensitiv input	1A/5A input	Type of auxiliary CT IX3
256	AUX CT IX4 TYPE	P.System Data 1		1A/5A input sensitiv input	1A/5A input	Type of auxiliary CT IX4

Addr.	Parameter	Function	C	Setting Options	Default Setting	Comments
261	VT SET	P.System Data 1		Not connected Side 1 Side 2 Side 3 Measuring loc.1 Measuring loc.2 Measuring loc.3 Busbar	Measuring loc.1	VT set UL1, UL2, UL3 is assigned
262	VT U4	P.System Data 1		Not connected conn/not assig. Side 1 Side 2 Side 3 Measuring loc.1 Measuring loc.2 Measuring loc.3 Busbar	Measuring loc.1	VT U4 is assigned
263	VT U4 TYPE	P.System Data 1		Udelta transf. UL1E transform. UL2E transform. UL3E transform. UL12 transform. UL23 transform. UL31 transform. Ux transformer	Udelta transf.	VT U4 is used as
270	Rated Frequency	P.System Data 1		50 Hz 60 Hz 16,7 Hz	50 Hz	Rated Frequency
271	PHASE SEQ.	P.System Data 1		L1 L2 L3 L1 L3 L2	L1 L2 L3	Phase Sequence
276	TEMP. UNIT	P.System Data 1		Celsius Fahrenheit	Celsius	Unit of temperature measurement
302	CHANGE	Change Group		Group A Group B Group C Group D Binary Input Protocol	Group A	Change to Another Setting Group
311	UN-PRI SIDE 1	P.System Data 1		0.4 .. 800.0 kV	110.0 kV	Rated Primary Voltage Side 1
312	SN SIDE 1	P.System Data 1		0.20 .. 5000.00 MVA	38.10 MVA	Rated Apparent Power of Transf. Side 1
313	STARPNT SIDE 1	P.System Data 1		Earthed Isolated	Earthed	Starpoint of Side 1 is
314	CONNECTION S1	P.System Data 1		Y D Z	Y	Transf. Winding Connection Side 1
321	UN-PRI SIDE 2	P.System Data 1		0.4 .. 800.0 kV	11.0 kV	Rated Primary Voltage Side 2
322	SN SIDE 2	P.System Data 1		0.20 .. 5000.00 MVA	38.10 MVA	Rated Apparent Power of Transf. Side 2
323	STARPNT SIDE 2	P.System Data 1		Earthed Isolated	Earthed	Starpoint of Side 2 is
324	CONNECTION S2	P.System Data 1		Y D Z	Y	Transf. Winding Connection Side 2
325	VECTOR GRP S2	P.System Data 1		0 1 2 3 4 5 6 7 8 9 10 11	0	Vector Group Numeral of Side 2
331	UN-PRI SIDE 3	P.System Data 1		0.4 .. 800.0 kV	11.0 kV	Rated Primary Voltage Side 3
332	SN SIDE 3	P.System Data 1		0.20 .. 5000.00 MVA	10.00 MVA	Rated Apparent Power of Transf. Side 3
333	STARPNT SIDE 3	P.System Data 1		Earthed Isolated	Earthed	Starpoint of Side 3 is

Addr.	Parameter	Function	C	Setting Options	Default Setting	Comments
334	CONNECTION S3	P.System Data 1		Y D Z	Y	Transf. Winding Connection Side 3
335	VECTOR GRP S3	P.System Data 1		0 1 2 3 4 5 6 7 8 9 10 11	0	Vector Group Numeral of Side 3
341	UN-PRI SIDE 4	P.System Data 1		0.4 .. 800.0 kV	11.0 kV	Rated Primary Voltage Side 4
342	SN SIDE 4	P.System Data 1		0.20 .. 5000.00 MVA	10.00 MVA	Rated Apparent Power of Transf. Side 4
343	STARPNT SIDE 4	P.System Data 1		Earthed Isolated	Earthed	Starpoint of Side 4 is
344	CONNECTION S4	P.System Data 1		Y D Z	Y	Transf. Winding Connection Side 4
345	VECTOR GRP S4	P.System Data 1		0 1 2 3 4 5 6 7 8 9 10 11	0	Vector Group Numeral of Side 4
351	UN-PRI SIDE 5	P.System Data 1		0.4 .. 800.0 kV	11.0 kV	Rated Primary Voltage Side 5
352	SN SIDE 5	P.System Data 1		0.20 .. 5000.00 MVA	10.00 MVA	Rated Apparent Power of Transf. Side 5
353	STARPNT SIDE 5	P.System Data 1		Earthed Isolated	Earthed	Starpoint of Side 5 is
354	CONNECTION S5	P.System Data 1		Y D Z	Y	Transf. Winding Connection Side 5
355	VECTOR GRP S5	P.System Data 1		0 1 2 3 4 5 6 7 8 9 10 11	0	Vector Group Numeral of Side 5
361	UN GEN/MOTOR	P.System Data 1		0.4 .. 800.0 kV	21.0 kV	Rated Primary Voltage Genera-tor/Motor
362	SN GEN/MOTOR	P.System Data 1		0.20 .. 5000.00 MVA	70.00 MVA	Rated Apparent Power of the Generator
370	UN BUSBAR	P.System Data 1		0.4 .. 800.0 kV	110.0 kV	Rated Primary Voltage Busbar
371	I PRIMARY OP.	P.System Data 1		1 .. 100000 A	200 A	Primary Operating Current of Busbar
372	I PRIMARY OP S1	P.System Data 1		1 .. 100000 A	200 A	Primary Operating Current Side 1
373	I PRIMARY OP S2	P.System Data 1		1 .. 100000 A	200 A	Primary Operating Current Side 2
374	I PRIMARY OP S3	P.System Data 1		1 .. 100000 A	200 A	Primary Operating Current Side 3
375	I PRIMARY OP S4	P.System Data 1		1 .. 100000 A	200 A	Primary Operating Current Side 4

Addr.	Parameter	Function	C	Setting Options	Default Setting	Comments
376	I PRIMARY OP S5	P.System Data 1		1 .. 100000 A	200 A	Primary Operating Current Side 5
381	I PRIMARY OP 1	P.System Data 1		1 .. 100000 A	200 A	Primary Operating Current End 1
382	I PRIMARY OP 2	P.System Data 1		1 .. 100000 A	200 A	Primary Operating Current End 2
383	I PRIMARY OP 3	P.System Data 1		1 .. 100000 A	200 A	Primary Operating Current End 3
384	I PRIMARY OP 4	P.System Data 1		1 .. 100000 A	200 A	Primary Operating Current End 4
385	I PRIMARY OP 5	P.System Data 1		1 .. 100000 A	200 A	Primary Operating Current End 5
386	I PRIMARY OP 6	P.System Data 1		1 .. 100000 A	200 A	Primary Operating Current End 6
387	I PRIMARY OP 7	P.System Data 1		1 .. 100000 A	200 A	Primary Operating Current End 7
388	I PRIMARY OP 8	P.System Data 1		1 .. 100000 A	200 A	Primary Operating Current End 8
389	I PRIMARY OP 9	P.System Data 1		1 .. 100000 A	200 A	Primary Operating Current End 9
390	I PRIMARY OP 10	P.System Data 1		1 .. 100000 A	200 A	Primary Operating Current End 10
391	I PRIMARY OP 11	P.System Data 1		1 .. 100000 A	200 A	Primary Operating Current End 11
392	I PRIMARY OP 12	P.System Data 1		1 .. 100000 A	200 A	Primary Operating Current End 12
396	PHASE SELECTION	P.System Data 1		Phase 1 Phase 2 Phase 3	Phase 1	Phase selection
403	I PRIMARY OP M3	P.System Data 1		1 .. 100000 A	200 A	Primary Operating Current Meas. Loc. 3
404	I PRIMARY OP M4	P.System Data 1		1 .. 100000 A	200 A	Primary Operating Current Meas. Loc. 4
405	I PRIMARY OP M5	P.System Data 1		1 .. 100000 A	200 A	Primary Operating Current Meas. Loc. 5
408	UN-PRI M3	P.System Data 1		0.4 .. 800.0 kV	110.0 kV	Rated Primary Voltage Measuring Loc. 3
409	UN-PRI U4	P.System Data 1		0.4 .. 800.0 kV	110.0 kV	Rated Primary Voltage U4
413	REF PROT. AT	P.System Data 1		Side 1 Side 2 Side 3 Side 4 Side 5 auto-connected n.assigMeasLoc3 n.assigMeasLoc4 n.assigMeasLoc5	Side 1	Restricted earth fault prot. assigned to
414	REF PROT. 2 AT	P.System Data 1		Side 1 Side 2 Side 3 Side 4 Side 5 auto-connected n.assigMeasLoc3 n.assigMeasLoc4 n.assigMeasLoc5	Side 1	Restricted earth fault prot2 assigned to
420	DMT/IDMT Ph AT	P.System Data 1		Side 1 Side 2 Side 3 Side 4 Side 5 Measuring loc.1 Measuring loc.2 Measuring loc.3 Measuring loc.4 Measuring loc.5	Side 1	DMT / IDMT Phase assigned to
422	DMT/IDMT 3I0 AT	P.System Data 1		Side 1 Side 2 Side 3 Side 4 Side 5 Measuring loc.1 Measuring loc.2 Measuring loc.3 Measuring loc.4 Measuring loc.5	Side 1	DMT / IDMT 3I0 assigned to

Addr.	Parameter	Function	C	Setting Options	Default Setting	Comments
424	DMT/IDMT E AT	P.System Data 1		no assig. poss. AuxiliaryCT IX1 AuxiliaryCT IX2 AuxiliaryCT IX3 AuxiliaryCT IX4	AuxiliaryCT IX1	DMT / IDMT Earth assigned to
427	DMT 1PHASE AT	P.System Data 1		no assig. poss. AuxiliaryCT IX1 AuxiliaryCT IX2 AuxiliaryCT IX3 AuxiliaryCT IX4	AuxiliaryCT IX1	DMT 1Phase assigned to
430	DMT/IDMT Ph2 AT	P.System Data 1		Side 1 Side 2 Side 3 Side 4 Side 5 Measuring loc.1 Measuring loc.2 Measuring loc.3 Measuring loc.4 Measuring loc.5	Side 1	DMT / IDMT Phase 2 assigned to
432	DMT/IDMT Ph3 AT	P.System Data 1		Side 1 Side 2 Side 3 Side 4 Side 5 Measuring loc.1 Measuring loc.2 Measuring loc.3 Measuring loc.4 Measuring loc.5	Side 1	DMT / IDMT Phase 3 assigned to
434	DMT/IDMT3I0-2AT	P.System Data 1		Side 1 Side 2 Side 3 Side 4 Side 5 Measuring loc.1 Measuring loc.2 Measuring loc.3 Measuring loc.4 Measuring loc.5	Side 1	DMT / IDMT 3I0 2 assigned to
436	DMT/IDMT3I0-3AT	P.System Data 1		Side 1 Side 2 Side 3 Side 4 Side 5 Measuring loc.1 Measuring loc.2 Measuring loc.3 Measuring loc.4 Measuring loc.5	Side 1	DMT / IDMT 3I0 3 assigned to
438	DMT/IDMT E2 AT	P.System Data 1		no assig. poss. AuxiliaryCT IX1 AuxiliaryCT IX2 AuxiliaryCT IX3 AuxiliaryCT IX4	AuxiliaryCT IX1	DMT / IDMT Earth 2 assigned to
440	UNBAL. LOAD AT	P.System Data 1		Side 1 Side 2 Side 3 Side 4 Side 5 Measuring loc.1 Measuring loc.2 Measuring loc.3 Measuring loc.4 Measuring loc.5	Side 1	Unbalance Load (Neg. Seq.) assigned to
442	THERM. O/L AT	P.System Data 1		Side 1 Side 2 Side 3 Side 4 Side 5	Side 1	Thermal Overload Protection assigned to
444	THERM. O/L 2 AT	P.System Data 1		Side 1 Side 2 Side 3 Side 4 Side 5	Side 1	Thermal Overload Protection2 assigned to

Addr.	Parameter	Function	C	Setting Options	Default Setting	Comments
470	BREAKER FAIL.AT	P.System Data 1		Side 1 Side 2 Side 3 Side 4 Side 5 Measuring loc.1 Measuring loc.2 Measuring loc.3 Measuring loc.4 Measuring loc.5 Ext. switchg. 1	Side 1	Breaker Failure Protection assigned to
471	BREAKER FAIL2AT	P.System Data 1		Side 1 Side 2 Side 3 Side 4 Side 5 Measuring loc.1 Measuring loc.2 Measuring loc.3 Measuring loc.4 Measuring loc.5 Ext. switchg. 1	Side 1	Breaker Failure Protection 2 assigned to
511	STRPNT->OBJ M1	P.System Data 1		YES NO	YES	CT-Strpnt. Meas. Loc.1 in Dir. of Object
512	IN-PRI CT M1	P.System Data 1		1 .. 100000 A	200 A	CT Rated Primary Current Meas. Loc. 1
513	IN-SEC CT M1	P.System Data 1		1A 5A	1A	CT Rated Secondary Current Meas. Loc. 1
521	STRPNT->OBJ M2	P.System Data 1		YES NO	YES	CT-Strpnt. Meas. Loc.2 in Dir. of Object
522	IN-PRI CT M2	P.System Data 1		1 .. 100000 A	2000 A	CT Rated Primary Current Meas. Loc. 2
523	IN-SEC CT M2	P.System Data 1		1A 5A	1A	CT Rated Secondary Current Meas. Loc. 2
531	STRPNT->OBJ M3	P.System Data 1		YES NO	YES	CT-Strpnt. Meas. Loc.3 in Dir. of Object
532	IN-PRI CT M3	P.System Data 1		1 .. 100000 A	2000 A	CT Rated Primary Current Meas. Loc. 3
533	IN-SEC CT M3	P.System Data 1		1A 5A	1A	CT Rated Secondary Current Meas. Loc. 3
541	STRPNT->OBJ M4	P.System Data 1		YES NO	YES	CT-Strpnt. Meas. Loc.4 in Dir. of Object
542	IN-PRI CT M4	P.System Data 1		1 .. 100000 A	2000 A	CT Rated Primary Current Meas. Loc. 4
543	IN-SEC CT M4	P.System Data 1		1A 5A	1A	CT Rated Secondary Current Meas. Loc. 4
551	STRPNT->OBJ M5	P.System Data 1		YES NO	YES	CT-Strpnt. Meas. Loc.5 in Dir. of Object
552	IN-PRI CT M5	P.System Data 1		1 .. 100000 A	2000 A	CT Rated Primary Current Meas. Loc. 5
553	IN-SEC CT M5	P.System Data 1		1A 5A	1A	CT Rated Secondary Current Meas. Loc. 5
561	STRPNT->BUS I1	P.System Data 1		YES NO	YES	CT-Starpoint I1 in Direction of Busbar
562	IN-PRI CT I1	P.System Data 1		1 .. 100000 A	200 A	CT Rated Primary Current I1
563	IN-SEC CT I1	P.System Data 1		1A 5A 0.1A	1A	CT Rated Secondary Current I1
571	STRPNT->BUS I2	P.System Data 1		YES NO	YES	CT-Starpoint I2 in Direction of Busbar
572	IN-PRI CT I2	P.System Data 1		1 .. 100000 A	200 A	CT Rated Primary Current I2
573	IN-SEC CT I2	P.System Data 1		1A 5A 0.1A	1A	CT Rated Secondary Current I2
581	STRPNT->BUS I3	P.System Data 1		YES NO	YES	CT-Starpoint I3 in Direction of Busbar
582	IN-PRI CT I3	P.System Data 1		1 .. 100000 A	200 A	CT Rated Primary Current I3

Addr.	Parameter	Function	C	Setting Options	Default Setting	Comments
583	IN-SEC CT I3	P.System Data 1		1A 5A 0.1A	1A	CT Rated Secondary Current I3
591	STRPNT->BUS I4	P.System Data 1		YES NO	YES	CT-Starpoint I4 in Direction of Busbar
592	IN-PRI CT I4	P.System Data 1		1 .. 100000 A	200 A	CT Rated Primary Current I4
593	IN-SEC CT I4	P.System Data 1		1A 5A 0.1A	1A	CT Rated Secondary Current I4
601	STRPNT->BUS I5	P.System Data 1		YES NO	YES	CT-Starpoint I5 in Direction of Busbar
602	IN-PRI CT I5	P.System Data 1		1 .. 100000 A	200 A	CT Rated Primary Current I5
603	IN-SEC CT I5	P.System Data 1		1A 5A 0.1A	1A	CT Rated Secondary Current I5
611	STRPNT->BUS I6	P.System Data 1		YES NO	YES	CT-Starpoint I6 in Direction of Busbar
612	IN-PRI CT I6	P.System Data 1		1 .. 100000 A	200 A	CT Rated Primary Current I6
613	IN-SEC CT I6	P.System Data 1		1A 5A 0.1A	1A	CT Rated Secondary Current I6
621	STRPNT->BUS I7	P.System Data 1		YES NO	YES	CT-Starpoint I7 in Direction of Busbar
622	IN-PRI CT I7	P.System Data 1		1 .. 100000 A	200 A	CT Rated Primary Current I7
623	IN-SEC CT I7	P.System Data 1		1A 5A 0.1A	1A	CT Rated Secondary Current I7
631	STRPNT->BUS I8	P.System Data 1		YES NO	YES	CT-Starpoint I8 in Direction of Busbar
632	IN-PRI CT I8	P.System Data 1		1 .. 100000 A	200 A	CT Rated Primary Current I8
633	IN-SEC CT I8	P.System Data 1		1A 5A 0.1A	1A	CT Rated Secondary Current I8
641	STRPNT->BUS I9	P.System Data 1		YES NO	YES	CT-Starpoint I9 in Direction of Busbar
642	IN-PRI CT I9	P.System Data 1		1 .. 100000 A	200 A	CT Rated Primary Current I9
643	IN-SEC CT I9	P.System Data 1		1A 5A 0.1A	1A	CT Rated Secondary Current I9
651	STRPNT->BUS I10	P.System Data 1		YES NO	YES	CT-Starpoint I10 in Direction of Busbar
652	IN-PRI CT I10	P.System Data 1		1 .. 100000 A	200 A	CT Rated Primary Current I10
653	IN-SEC CT I10	P.System Data 1		1A 5A 0.1A	1A	CT Rated Secondary Current I10
661	STRPNT->BUS I11	P.System Data 1		YES NO	YES	CT-Starpoint I11 in Direction of Busbar
662	IN-PRI CT I11	P.System Data 1		1 .. 100000 A	200 A	CT Rated Primary Current I11
663	IN-SEC CT I11	P.System Data 1		1A 5A 0.1A	1A	CT Rated Secondary Current I11
671	STRPNT->BUS I12	P.System Data 1		YES NO	YES	CT-Starpoint I12 in Direction of Busbar
672	IN-PRI CT I12	P.System Data 1		1 .. 100000 A	200 A	CT Rated Primary Current I12
673	IN-SEC CT I12	P.System Data 1		1A 5A 0.1A	1A	CT Rated Secondary Current I12
711	EARTH IX1 AT	P.System Data 1		Terminal Q7 Terminal Q8	Terminal Q7	Earthing electrod IX1 connected to
712	IN-PRI CT IX1	P.System Data 1		1 .. 100000 A	200 A	CT rated primary current IX1
713	IN-SEC CT IX1	P.System Data 1		1A 5A	1A	CT rated secondary current IX1
721	EARTH IX2 AT	P.System Data 1		Terminal N7 Terminal N8	Terminal N7	Earthing electrod IX2 connected to
722	IN-PRI CT IX2	P.System Data 1		1 .. 100000 A	200 A	CT rated primary current IX2

Addr.	Parameter	Function	C	Setting Options	Default Setting	Comments
723	IN-SEC CT IX2	P.System Data 1		1A 5A	1A	CT rated secondary current IX2
731	EARTH IX3 AT	P.System Data 1		Terminal R7 Terminal R8	Terminal R7	Earthing electrod IX3 connected to
732	IN-PRI CT IX3	P.System Data 1		1 .. 100000 A	200 A	CT rated primary current IX3
733	IN-SEC CT IX3	P.System Data 1		1A 5A	1A	CT rated secondary current IX3
734	FACTOR CT IX3	P.System Data 1		1.0 .. 300.0	60.0	Factor: prim. over sek. current IX3
741	EARTH IX4 AT	P.System Data 1		Terminal P7 Terminal P8	Terminal P7	Earthing electrod IX4 connected to
742	IN-PRI CT IX4	P.System Data 1		1 .. 100000 A	200 A	CT rated primary current IX4
743	IN-SEC CT IX4	P.System Data 1		1A 5A	1A	CT rated secondary current IX4
744	FACTOR CT IX4	P.System Data 1		1.0 .. 300.0	60.0	Factor: prim. over sek. current IX4
801	UN-PRI VT SET	P.System Data 1		1.0 .. 1200.0 kV	110.0 kV	VT Rated Prim. Voltage Set UL1, UL2, UL3
802	UN-SEC VT SET	P.System Data 1		80 .. 125 V	100 V	VT Rated Sec. Voltage Set UL1, UL2, UL3
803	CORRECT. U Ang	P.System Data 1		-5.00 .. 5.00 °	0.00 °	Angle correction UL1, UL2, UL3 - VT
811	UN-PRI VT U4	P.System Data 1		1.0 .. 1200.0 kV	110.0 kV	VT Rated Primary Voltage U4
812	UN-SEC VT U4	P.System Data 1		80 .. 125 V	100 V	VT Rated Secondary Voltage U4
816	Uph / Udelta	P.System Data 1		0.10 .. 9.99	1.73	Matching ratio Phase-VT to Open-Delta-VT
817	Uph(U4)/Udelta	P.System Data 1		0.10 .. 9.99	1.73	Matching ratio Ph-VT(U4) to Open-DeltaVT
831	SwitchgCBaux S1	P.System Data 1		(Setting options depend on configuration)	Q0	Switchgear / CBaux at Side 1
832	SwitchgCBaux S2	P.System Data 1		(Setting options depend on configuration)	None	Switchgear / CBaux at Side 2
833	SwitchgCBaux S3	P.System Data 1		(Setting options depend on configuration)	None	Switchgear / CBaux at Side 3
834	SwitchgCBaux S4	P.System Data 1		(Setting options depend on configuration)	None	Switchgear / CBaux at Side 4
835	SwitchgCBaux S5	P.System Data 1		(Setting options depend on configuration)	None	Switchgear / CBaux at Side 5
836	SwitchgCBaux M1	P.System Data 1		(Setting options depend on configuration)	None	Switchgear / CBaux at Measuring Loc. M1
837	SwitchgCBaux M2	P.System Data 1		(Setting options depend on configuration)	None	Switchgear / CBaux at Measuring Loc. M2
838	SwitchgCBaux M3	P.System Data 1		(Setting options depend on configuration)	None	Switchgear / CBaux at Measuring Loc. M3
839	SwitchgCBaux M4	P.System Data 1		(Setting options depend on configuration)	None	Switchgear / CBaux at Measuring Loc. M4
840	SwitchgCBaux M5	P.System Data 1		(Setting options depend on configuration)	None	Switchgear / CBaux at Measuring Loc. M5
841	SwitchgCBaux E1	P.System Data 1		(Setting options depend on configuration)	None	Switchgear / CBaux at ext. location 1
851A	TMin TRIP CMD	P.System Data 1		0.01 .. 32.00 sec	0.15 sec	Minimum TRIP Command Duration
901	WAVEFORMTRIGGER	Osc. Fault Rec.		Save w. Pickup Save w. TRIP Start w. TRIP	Save w. Pickup	Waveform Capture
903	MAX. LENGTH	Osc. Fault Rec.		0.30 .. 5.00 sec	1.00 sec	Max. length of a Waveform Capture Record
904	PRE. TRIG. TIME	Osc. Fault Rec.		0.05 .. 0.50 sec	0.10 sec	Captured Waveform Prior to Trigger
905	POST REC. TIME	Osc. Fault Rec.		0.05 .. 0.50 sec	0.10 sec	Captured Waveform after Event
906	BinIn CAPT.TIME	Osc. Fault Rec.		0.10 .. 5.00 sec; ∞	0.50 sec	Capture Time via Binary Input
1107	P,Q sign	P.System Data 2		not reversed reversed	not reversed	sign of P,Q

Addr.	Parameter	Function	C	Setting Options	Default Setting	Comments
1111	PoleOpenCurr.S1	P.System Data 2		0.04 .. 1.00 I/InS	0.10 I/InS	Pole Open Current Threshold Side 1
1112	PoleOpenCurr.S2	P.System Data 2		0.04 .. 1.00 I/InS	0.10 I/InS	Pole Open Current Threshold Side 2
1113	PoleOpenCurr.S3	P.System Data 2		0.04 .. 1.00 I/InS	0.16 I/InS	Pole Open Current Threshold Side 3
1114	PoleOpenCurr.S4	P.System Data 2		0.04 .. 1.00 I/InS	0.16 I/InS	Pole Open Current Threshold Side 4
1115	PoleOpenCurr.S5	P.System Data 2		0.04 .. 1.00 I/InS	0.16 I/InS	Pole Open Current Threshold Side 5
1121	PoleOpenCurr.M1	P.System Data 2	1A	0.04 .. 1.00 A	0.04 A	Pole Open Current Threshold Meas.Loc. M1
			5A	0.20 .. 5.00 A	0.20 A	
1122	PoleOpenCurr.M2	P.System Data 2	1A	0.04 .. 1.00 A	0.04 A	Pole Open Current Threshold Meas.Loc. M2
			5A	0.20 .. 5.00 A	0.20 A	
1123	PoleOpenCurr.M3	P.System Data 2	1A	0.04 .. 1.00 A	0.04 A	Pole Open Current Threshold Meas.Loc. M3
			5A	0.20 .. 5.00 A	0.20 A	
1124	PoleOpenCurr.M4	P.System Data 2	1A	0.04 .. 1.00 A	0.04 A	Pole Open Current Threshold Meas.Loc. M4
			5A	0.20 .. 5.00 A	0.20 A	
1125	PoleOpenCurr.M5	P.System Data 2	1A	0.04 .. 1.00 A	0.04 A	Pole Open Current Threshold Meas.Loc. M5
			5A	0.20 .. 5.00 A	0.20 A	
1131	PoleOpenCurr I1	P.System Data 2	1A	0.04 .. 1.00 A	0.04 A	Pole Open Current Threshold End 1
			5A	0.20 .. 5.00 A	0.20 A	
			0.1A	0.004 .. 0.100 A	0.004 A	
1132	PoleOpenCurr I2	P.System Data 2	1A	0.04 .. 1.00 A	0.04 A	Pole Open Current Threshold End 2
			5A	0.20 .. 5.00 A	0.20 A	
			0.1A	0.004 .. 0.100 A	0.004 A	
1133	PoleOpenCurr I3	P.System Data 2	1A	0.04 .. 1.00 A	0.04 A	Pole Open Current Threshold End 3
			5A	0.20 .. 5.00 A	0.20 A	
			0.1A	0.004 .. 0.100 A	0.004 A	
1134	PoleOpenCurr I4	P.System Data 2	1A	0.04 .. 1.00 A	0.04 A	Pole Open Current Threshold End 4
			5A	0.20 .. 5.00 A	0.20 A	
			0.1A	0.004 .. 0.100 A	0.004 A	
1135	PoleOpenCurr I5	P.System Data 2	1A	0.04 .. 1.00 A	0.04 A	Pole Open Current Threshold End 5
			5A	0.20 .. 5.00 A	0.20 A	
			0.1A	0.004 .. 0.100 A	0.004 A	
1136	PoleOpenCurr I6	P.System Data 2	1A	0.04 .. 1.00 A	0.04 A	Pole Open Current Threshold End 6
			5A	0.20 .. 5.00 A	0.20 A	
			0.1A	0.004 .. 0.100 A	0.004 A	
1137	PoleOpenCurr I7	P.System Data 2	1A	0.04 .. 1.00 A	0.04 A	Pole Open Current Threshold End 7
			5A	0.20 .. 5.00 A	0.20 A	
			0.1A	0.004 .. 0.100 A	0.004 A	
1138	PoleOpenCurr I8	P.System Data 2	1A	0.04 .. 1.00 A	0.04 A	Pole Open Current Threshold End 8
			5A	0.20 .. 5.00 A	0.20 A	
			0.1A	0.004 .. 0.100 A	0.004 A	
1139	PoleOpenCurr I9	P.System Data 2	1A	0.04 .. 1.00 A	0.04 A	Pole Open Current Threshold End 9
			5A	0.20 .. 5.00 A	0.20 A	
			0.1A	0.004 .. 0.100 A	0.004 A	
1140	PoleOpenCurrI10	P.System Data 2	1A	0.04 .. 1.00 A	0.04 A	Pole Open Current Threshold End 10
			5A	0.20 .. 5.00 A	0.20 A	
			0.1A	0.004 .. 0.100 A	0.004 A	
1141	PoleOpenCurrI11	P.System Data 2	1A	0.04 .. 1.00 A	0.04 A	Pole Open Current Threshold End 11
			5A	0.20 .. 5.00 A	0.20 A	
			0.1A	0.004 .. 0.100 A	0.004 A	
1142	PoleOpenCurrI12	P.System Data 2	1A	0.04 .. 1.00 A	0.04 A	Pole Open Current Threshold End 12
			5A	0.20 .. 5.00 A	0.20 A	
			0.1A	0.004 .. 0.100 A	0.004 A	

Addr.	Parameter	Function	C	Setting Options	Default Setting	Comments
1151	PoleOpenCurrIX1	P.System Data 2	1A	0.04 .. 1.00 A	0.04 A	Pole Open Current Threshold AuxiliaryCT1
			5A	0.20 .. 5.00 A	0.20 A	
1152	PoleOpenCurrIX2	P.System Data 2	1A	0.04 .. 1.00 A	0.04 A	Pole Open Current Threshold AuxiliaryCT2
			5A	0.20 .. 5.00 A	0.20 A	
1153	PoleOpenCurrIX3	P.System Data 2	1A	0.04 .. 1.00 A	0.04 A	Pole Open Current Threshold AuxiliaryCT3
			5A	0.20 .. 5.00 A	0.20 A	
1154	PoleOpenCurrIX4	P.System Data 2	1A	0.04 .. 1.00 A	0.04 A	Pole Open Current Threshold AuxiliaryCT4
			5A	0.20 .. 5.00 A	0.20 A	
1201	DIFF. PROT.	Diff. Prot		OFF ON Block relay	OFF	Differential Protection
1205	INC.CHAR.START	Diff. Prot		OFF ON	OFF	Increase of Trip Char. During Start
1206	INRUSH 2.HARM.	Diff. Prot		OFF ON	ON	Inrush with 2. Harmonic Restraint
1207	RESTR. n.HARM.	Diff. Prot		OFF 3. Harmonic 5. Harmonic	OFF	n-th Harmonic Restraint
1208	I-DIFF> MON.	Diff. Prot		OFF ON	ON	Differential Current monitoring
1210	I> CURR. GUARD	Diff. Prot		0.20 .. 2.00 I/InS; 0	0.00 I/InS	I> for Current Guard
1211A	DIFFw.IE1-MEAS	Diff. Prot		NO YES	NO	Diff-Prot. with meas. Earth Current S1
1212A	DIFFw.IE2-MEAS	Diff. Prot		NO YES	NO	Diff-Prot. with meas. Earth Current S2
1213A	DIFFw.IE3-MEAS	Diff. Prot		NO YES	NO	Diff-Prot. with meas. Earth Current S3
1214A	DIFFw.IE4-MEAS	Diff. Prot		NO YES	NO	Diff-Prot. with meas. Earth Current S4
1215A	DIFFw.IE5-MEAS	Diff. Prot		NO YES	NO	Diff-Prot. with meas. Earth Current S5
1216A	DIFFw.IE3phMEAS	Diff. Prot		NO YES	NO	Diff-Prot.with meas.current earth.electr
1221	I-DIFF>	Diff. Prot		0.05 .. 2.00 I/InO	0.20 I/InO	Pickup Value of Differential Curr.
1226A	T I-DIFF>	Diff. Prot		0.00 .. 60.00 sec; ∞	0.00 sec	T I-DIFF> Time Delay
1231	I-DIFF>>	Diff. Prot		0.5 .. 35.0 I/InO; ∞	7.5 I/InO	Pickup Value of High Set Trip
1236A	T I-DIFF>>	Diff. Prot		0.00 .. 60.00 sec; ∞	0.00 sec	T I-DIFF>> Time Delay
1241A	SLOPE 1	Diff. Prot		0.10 .. 0.50	0.25	Slope 1 of Tripping Characteristic
1242A	BASE POINT 1	Diff. Prot		0.00 .. 2.00 I/InO	0.00 I/InO	Base Point for Slope 1 of Charac.
1243A	SLOPE 2	Diff. Prot		0.25 .. 0.95	0.50	Slope 2 of Tripping Characteristic
1244A	BASE POINT 2	Diff. Prot		0.00 .. 10.00 I/InO	2.50 I/InO	Base Point for Slope 2 of Charac.
1251A	I-REST. STARTUP	Diff. Prot		0.00 .. 2.00 I/InO	0.10 I/InO	I-RESTRAINT for Start Detection
1252A	START-FACTOR	Diff. Prot		1.0 .. 2.0	1.0	Factor for Increasing of Char. at Start
1253	T START MAX	Diff. Prot		0.0 .. 180.0 sec	5.0 sec	Maximum Permissible Starting Time
1261A	I-ADD ON STAB.	Diff. Prot		2.00 .. 15.00 I/InO	4.00 I/InO	Pickup for Add-on Stabilization
1262A	T ADD ON-STAB.	Diff. Prot		2 .. 250 Cycle; ∞	15 Cycle	Duration of Add-on Stabilization
1263A	CROSSB. ADD ON	Diff. Prot		2 .. 1000 Cycle; 0; ∞	15 Cycle	Time for Cross-blocking Add-on Stabiliz.
1271	2. HARMONIC	Diff. Prot		10 .. 80 %	15 %	2nd Harmonic Content in I-DIFF
1272A	CROSSB. 2. HARM	Diff. Prot		2 .. 1000 Cycle; 0; ∞	3 Cycle	Time for Cross-blocking 2nd Harm.
1276	n. HARMONIC	Diff. Prot		10 .. 80 %	30 %	n-th Harmonic Content in I-DIFF
1277A	CROSSB. n.HARM	Diff. Prot		2 .. 1000 Cycle; 0; ∞	0 Cycle	Time for Cross-blocking n-th Harm.
1278A	IDIFFmax n.HM	Diff. Prot		0.5 .. 20.0 I/InO	1.5 I/InO	Limit IDIFFmax of n-th Harm.Restraint
1281	I-DIFF> MON.	Diff. Prot		0.15 .. 0.80 I/InO	0.20 I/InO	Pickup Value of diff. Current Monitoring
1282	T I-DIFF> MON.	Diff. Prot		1 .. 10 sec	2 sec	T I-DIFF> Monitoring Time Delay

Addr.	Parameter	Function	C	Setting Options	Default Setting	Comments
1301	REF PROT.	REF		OFF ON Block relay	OFF	Restricted Earth Fault Protection
1311	I-REF>	REF		0.05 .. 2.00 I/InS	0.15 I/InS	Pick up value I REF>
1312A	T I-REF>	REF		0.00 .. 60.00 sec; ∞	0.00 sec	T I-REF> Time Delay
1313A	SLOPE	REF		0.00 .. 0.95	0.00	Slope of Charac. I-REF> = f(I-SUM)
1401	REF PROT.	REF 2		OFF ON Block relay	OFF	Restricted Earth Fault Protection
1411	I-REF>	REF 2		0.05 .. 2.00 I/InS	0.15 I/InS	Pick up value I REF>
1412A	T I-REF>	REF 2		0.00 .. 60.00 sec; ∞	0.00 sec	T I-REF> Time Delay
1413A	SLOPE	REF 2		0.00 .. 0.95	0.00	Slope of Charac. I-REF> = f(I-SUM)
1701	COLDLOAD PICKUP	ColdLoadPickup		OFF ON	OFF	Cold-Load-Pickup Function
1702	Start CLP Phase	ColdLoadPickup		No Current Breaker Contact	No Current	Start Condition CLP for O/C Phase
1703	Start CLP 3I0	ColdLoadPickup		No Current Breaker Contact	No Current	Start Condition CLP for O/C 3I0
1704	Start CLP Earth	ColdLoadPickup		No Current Breaker Contact	No Current	Start Condition CLP for O/C Earth
1705	Start CLP Ph 2	ColdLoadPickup		No Current Breaker Contact	No Current	Start Condition CLP for O/C Phase 2
1706	Start CLP Ph 3	ColdLoadPickup		No Current Breaker Contact	No Current	Start Condition CLP for O/C Phase 3
1707	Start CLP 3I0 2	ColdLoadPickup		No Current Breaker Contact	No Current	Start Condition CLP for O/C 3I0 2
1708	Start CLP 3I0 3	ColdLoadPickup		No Current Breaker Contact	No Current	Start Condition CLP for O/C 3I0 3
1709	Start CLP E 2	ColdLoadPickup		No Current Breaker Contact	No Current	Start Condition CLP for O/C Earth 2
1711	CB Open Time	ColdLoadPickup		0 .. 21600 sec	3600 sec	Circuit Breaker OPEN Time
1712	Active Time	ColdLoadPickup		1 .. 21600 sec	3600 sec	Active Time
1713	Stop Time	ColdLoadPickup		1 .. 600 sec; ∞	600 sec	Stop Time
2001	PHASE O/C	Phase O/C		ON OFF Block relay	OFF	Phase Time Overcurrent
2002	InRushRest. Ph	Phase O/C		ON OFF	OFF	InRush Restrained O/C Phase
2008A	MANUAL CLOSE	Phase O/C		I>> instant. I> instant. Ip instant. Inactive	I>> instant.	O/C Manual Close Mode
2011	I>>	Phase O/C	1A	0.10 .. 35.00 A; ∞	4.00 A	I>> Pickup
			5A	0.50 .. 175.00 A; ∞	20.00 A	
2012	I>>	Phase O/C		0.10 .. 35.00 I/InS; ∞	4.00 I/InS	I>> Pickup
2013	T I>>	Phase O/C		0.00 .. 60.00 sec; ∞	0.10 sec	T I>> Time Delay
2014	I>	Phase O/C	1A	0.10 .. 35.00 A; ∞	2.00 A	I> Pickup
			5A	0.50 .. 175.00 A; ∞	10.00 A	
2015	I>	Phase O/C		0.10 .. 35.00 I/InS; ∞	2.00 I/InS	I> Pickup
2016	T I>	Phase O/C		0.00 .. 60.00 sec; ∞	0.30 sec	T I> Time Delay
2021	Ip	Phase O/C	1A	0.10 .. 4.00 A	2.00 A	Ip Pickup
			5A	0.50 .. 20.00 A	10.00 A	
2022	Ip	Phase O/C		0.10 .. 4.00 I/InS	2.00 I/InS	Ip Pickup
2023	T Ip	Phase O/C		0.05 .. 3.20 sec; ∞	0.50 sec	T Ip Time Dial
2024	D Ip	Phase O/C		0.50 .. 15.00 ; ∞	5.00	D Ip Time Dial
2025	TOC DROP-OUT	Phase O/C		Instantaneous Disk Emulation	Disk Emulation	TOC Drop-out characteristic
2026	IEC CURVE	Phase O/C		Normal Inverse Very Inverse Extremely Inv. Long Inverse	Normal Inverse	IEC Curve

Addr.	Parameter	Function	C	Setting Options	Default Setting	Comments
2027	ANSI CURVE	Phase O/C		Very Inverse Inverse Short Inverse Long Inverse Moderately Inv. Extremely Inv. Definite Inv.	Very Inverse	ANSI Curve
2031	I/Ip PU T/Tp	Phase O/C		1.00 .. 20.00 I/Ip; ∞ 0.01 .. 999.00 TD		Pickup Curve I/Ip - TI/TIp
2032	MofPU Res T/Tp	Phase O/C		0.05 .. 0.95 I/Ip; ∞ 0.01 .. 999.00 TD		Multiple of Pickup <-> TI/TIp
2041	2.HARM. Phase	Phase O/C		10 .. 45 %	15 %	2nd harmonic O/C Ph. in % of fundamental
2042	I Max InRr. Ph.	Phase O/C	1A	0.30 .. 25.00 A	7.50 A	Maximum Current for Inr. Rest. O/C Phase
			5A	1.50 .. 125.00 A	37.50 A	
2043	I Max InRr. Ph.	Phase O/C		0.30 .. 25.00 I/InS	7.50 I/InS	Maximum Current for Inr. Rest. O/C Phase
2044	CROSS BLK.Phase	Phase O/C		NO YES	NO	CROSS BLOCK O/C Phase
2045	T CROSS BLK.Ph	Phase O/C		0.00 .. 180.00 sec	0.00 sec	CROSS BLOCK Time O/C Phase
2111	I>>	Phase O/C	1A	0.10 .. 35.00 A; ∞	10.00 A	I>> Pickup
			5A	0.50 .. 175.00 A; ∞	50.00 A	
2112	I>>	Phase O/C		0.10 .. 35.00 I/InS; ∞	10.00 I/InS	I>> Pickup
2113	T I>>	Phase O/C		0.00 .. 60.00 sec; ∞	0.10 sec	T I>> Time Delay
2114	I>	Phase O/C	1A	0.10 .. 35.00 A; ∞	4.00 A	I> Pickup
			5A	0.50 .. 175.00 A; ∞	20.00 A	
2115	I>	Phase O/C		0.10 .. 35.00 I/InS; ∞	4.00 I/InS	I> Pickup
2116	T I>	Phase O/C		0.00 .. 60.00 sec; ∞	0.30 sec	T I> Time Delay
2121	Ip	Phase O/C	1A	0.10 .. 4.00 A	4.00 A	Ip Pickup
			5A	0.50 .. 20.00 A	20.00 A	
2122	Ip	Phase O/C		0.10 .. 4.00 I/InS	4.00 I/InS	Ip Pickup
2123	T Ip	Phase O/C		0.05 .. 3.20 sec; ∞	0.50 sec	T Ip Time Dial
2124	D Ip	Phase O/C		0.50 .. 15.00 ; ∞	5.00	D Ip Time Dial
2201	3I0 O/C	3I0 O/C		ON OFF Block relay	OFF	3I0 Time Overcurrent
2202	InRushRest. 3I0	3I0 O/C		ON OFF	OFF	InRush Restrained O/C 3I0
2208A	3I0 MAN. CLOSE	3I0 O/C		3I0>> instant. 3I0> instant. 3I0p instant. Inactive	3I0>> instant.	O/C 3I0 Manual Close Mode
2211	3I0>>	3I0 O/C	1A	0.05 .. 35.00 A; ∞	1.00 A	3I0>> Pickup
			5A	0.25 .. 175.00 A; ∞	5.00 A	
2212	3I0>>	3I0 O/C		0.05 .. 35.00 I/InS; ∞	1.00 I/InS	3I0>> Pickup
2213	T 3I0>>	3I0 O/C		0.00 .. 60.00 sec; ∞	1.50 sec	T 3I0>> Time Delay
2214	3I0>	3I0 O/C	1A	0.05 .. 35.00 A; ∞	0.40 A	3I0> Pickup
			5A	0.25 .. 175.00 A; ∞	2.00 A	
2215	3I0>	3I0 O/C		0.05 .. 35.00 I/InS; ∞	0.40 I/InS	3I0> Pickup
2216	T 3I0>	3I0 O/C		0.00 .. 60.00 sec; ∞	2.00 sec	T 3I0> Time Delay
2221	3I0p	3I0 O/C	1A	0.05 .. 4.00 A	0.40 A	3I0p Pickup
			5A	0.25 .. 20.00 A	2.00 A	
2222	3I0p	3I0 O/C		0.05 .. 4.00 I/InS	0.40 I/InS	3I0p Pickup
2223	T 3I0p	3I0 O/C		0.05 .. 3.20 sec; ∞	0.50 sec	T 3I0p Time Dial
2224	D 3I0p	3I0 O/C		0.50 .. 15.00 ; ∞	5.00	D 3I0p Time Dial
2225	TOC DROP-OUT	3I0 O/C		Instantaneous Disk Emulation	Disk Emulation	TOC Drop-out Characteristic
2226	IEC CURVE	3I0 O/C		Normal Inverse Very Inverse Extremely Inv. Long Inverse	Normal Inverse	IEC Curve

Addr.	Parameter	Function	C	Setting Options	Default Setting	Comments
2227	ANSI CURVE	3I0 O/C		Very Inverse Inverse Short Inverse Long Inverse Moderately Inv. Extremely Inv. Definite Inv.	Very Inverse	ANSI Curve
2231	I/I0p PU T/TI0p	3I0 O/C		1.00 .. 20.00 I/Ip; ∞ 0.01 .. 999.00 TD		Pickup Curve 3I0/3I0p - T3I0/T3I0p
2232	MofPU ResT/TI0p	3I0 O/C		0.05 .. 0.95 I/Ip; ∞ 0.01 .. 999.00 TD		Multiple of Pickup <-> T3I0/T3I0p
2241	2.HARM. 3I0	3I0 O/C		10 .. 45 %	15 %	2nd harmonic O/C 3I0 in % of fundamental
2242	I Max InRr. 3I0	3I0 O/C	1A	0.30 .. 25.00 A	7.50 A	Maximum Current for Inr. Rest. O/C 3I0
			5A	1.50 .. 125.00 A	37.50 A	
2243	I Max InRr. 3I0	3I0 O/C		0.30 .. 25.00 I/InS	7.50 I/InS	Maximum Current for Inr. Rest. O/C 3I0
2311	3I0>>	3I0 O/C	1A	0.05 .. 35.00 A; ∞	7.00 A	3I0>> Pickup
			5A	0.25 .. 175.00 A; ∞	35.00 A	
2312	3I0>>	3I0 O/C		0.05 .. 35.00 I/InS; ∞	7.00 I/InS	3I0>> Pickup
2313	T 3I0>>	3I0 O/C		0.00 .. 60.00 sec; ∞	1.50 sec	T 3I0>> Time Delay
2314	3I0>	3I0 O/C	1A	0.05 .. 35.00 A; ∞	1.50 A	3I0> Pickup
			5A	0.25 .. 175.00 A; ∞	7.50 A	
2315	3I0>	3I0 O/C		0.05 .. 35.00 I/InS; ∞	1.50 I/InS	3I0> Pickup
2316	T 3I0>	3I0 O/C		0.00 .. 60.00 sec; ∞	2.00 sec	T 3I0> Time Delay
2321	3I0p	3I0 O/C	1A	0.05 .. 4.00 A	1.00 A	3I0p Pickup
			5A	0.25 .. 20.00 A	5.00 A	
2322	3I0p	3I0 O/C		0.05 .. 4.00 I/InS	1.00 I/InS	3I0p Pickup
2323	T 3I0p	3I0 O/C		0.05 .. 3.20 sec; ∞	0.50 sec	T 3I0p Time Dial
2324	D 3I0p	3I0 O/C		0.50 .. 15.00 ; ∞	5.00	D 3I0p Time Dial
2401	EARTH O/C	Earth O/C		ON OFF Block relay	OFF	Earth Time Overcurrent
2402	InRushRestEarth	Earth O/C		ON OFF	OFF	InRush Restrained O/C Earth
2408A	IE MAN. CLOSE	Earth O/C		IE>> instant. IE> instant. IEp instant. Inactive	IE>> instant.	O/C IE Manual Close Mode
2411	IE>>	Earth O/C	1A	0.05 .. 35.00 A; ∞	1.00 A	IE>> Pickup
			5A	0.25 .. 175.00 A; ∞	5.00 A	
2412	T IE>>	Earth O/C		0.00 .. 60.00 sec; ∞	1.50 sec	T IE>> Time Delay
2413	IE>	Earth O/C	1A	0.05 .. 35.00 A; ∞	0.40 A	IE> Pickup
			5A	0.25 .. 175.00 A; ∞	2.00 A	
2414	T IE>	Earth O/C		0.00 .. 60.00 sec; ∞	2.00 sec	T IE> Time Delay
2421	IEp	Earth O/C	1A	0.05 .. 4.00 A	0.40 A	IEp Pickup
			5A	0.25 .. 20.00 A	2.00 A	
2422	T IEp	Earth O/C		0.05 .. 3.20 sec; ∞	0.50 sec	T IEp Time Dial
2423	D IEp	Earth O/C		0.50 .. 15.00 ; ∞	5.00	D IEp Time Dial
2424	TOC DROP-OUT	Earth O/C		Instantaneous Disk Emulation	Disk Emulation	TOC Drop-out Characteristic
2425	IEC CURVE	Earth O/C		Normal Inverse Very Inverse Extremely Inv. Long Inverse	Normal Inverse	IEC Curve
2426	ANSI CURVE	Earth O/C		Very Inverse Inverse Short Inverse Long Inverse Moderately Inv. Extremely Inv. Definite Inv.	Very Inverse	ANSI Curve

Addr.	Parameter	Function	C	Setting Options	Default Setting	Comments
2431	I/IEp PU T/TEp	Earth O/C		1.00 .. 20.00 I/Ip; ∞ 0.01 .. 999.00 TD		Pickup Curve IE/IEp - TIE/TIEp
2432	MofPU Res T/TEp	Earth O/C		0.05 .. 0.95 I/Ip; ∞ 0.01 .. 999.00 TD		Multiple of Pickup <-> TI/TIEp
2441	2.HARM. Earth	Earth O/C		10 .. 45 %	15 %	2nd harmonic O/C E in % of fundamental
2442	I Max InRr. E	Earth O/C	1A	0.30 .. 25.00 A	7.50 A	Maximum Current for Inr. Rest. O/C Earth
			5A	1.50 .. 125.00 A	37.50 A	
2511	IE>>	Earth O/C	1A	0.05 .. 35.00 A; ∞	7.00 A	IE>> Pickup
			5A	0.25 .. 175.00 A; ∞	35.00 A	
2512	T IE>>	Earth O/C		0.00 .. 60.00 sec; ∞	1.50 sec	T IE>> Time Delay
2513	IE>	Earth O/C	1A	0.05 .. 35.00 A; ∞	1.50 A	IE> Pickup
			5A	0.25 .. 175.00 A; ∞	7.50 A	
2514	T IE>	Earth O/C		0.00 .. 60.00 sec; ∞	2.00 sec	T IE> Time Delay
2521	IEp	Earth O/C	1A	0.05 .. 4.00 A	1.00 A	IEp Pickup
			5A	0.25 .. 20.00 A	5.00 A	
2522	T IEp	Earth O/C		0.05 .. 3.20 sec; ∞	0.50 sec	T IEp Time Dial
2523	D IEp	Earth O/C		0.50 .. 15.00 ; ∞	5.00	D IEp Time Dial
2701	1Phase O/C	1Phase O/C		OFF ON Block relay	OFF	1Phase Time Overcurrent
2702	1Phase I>>	1Phase O/C	1A	0.05 .. 35.00 A; ∞	0.50 A	1Phase O/C I>> Pickup
			5A	0.25 .. 175.00 A; ∞	2.50 A	
2703	1Phase I>>	1Phase O/C		0.003 .. 1.500 A; ∞	0.300 A	1Phase O/C I>> Pickup
2704	T 1Phase I>>	1Phase O/C		0.00 .. 60.00 sec; ∞	0.10 sec	T 1Phase O/C I>> Time Delay
2705	1Phase I>	1Phase O/C	1A	0.05 .. 35.00 A; ∞	0.20 A	1Phase O/C I> Pickup
			5A	0.25 .. 175.00 A; ∞	1.00 A	
2706	1Phase I>	1Phase O/C		0.003 .. 1.500 A; ∞	0.100 A	1Phase O/C I> Pickup
2707	T 1Phase I>	1Phase O/C		0.00 .. 60.00 sec; ∞	0.50 sec	T 1Phase O/C I> Time Delay
2911A	FFM U>(min)	Supervision		10 .. 100 V	20 V	Minimum Voltage Threshold U>
3001	PHASE O/C	Phase O/C 2		ON OFF Block relay	OFF	Phase Time Overcurrent
3002	InRushRest. Ph	Phase O/C 2		ON OFF	OFF	InRush Restrained O/C Phase
3008A	MANUAL CLOSE	Phase O/C 2		I>> instant. I> instant. Ip instant. Inactive	I>> instant.	O/C Manual Close Mode
3011	I>>	Phase O/C 2	1A	0.10 .. 35.00 A; ∞	4.00 A	I>> Pickup
			5A	0.50 .. 175.00 A; ∞	20.00 A	
3012	I>>	Phase O/C 2		0.10 .. 35.00 I/InS; ∞	4.00 I/InS	I>> Pickup
3013	T I>>	Phase O/C 2		0.00 .. 60.00 sec; ∞	0.10 sec	T I>> Time Delay
3014	I>	Phase O/C 2	1A	0.10 .. 35.00 A; ∞	2.00 A	I> Pickup
			5A	0.50 .. 175.00 A; ∞	10.00 A	
3015	I>	Phase O/C 2		0.10 .. 35.00 I/InS; ∞	2.00 I/InS	I> Pickup
3016	T I>	Phase O/C 2		0.00 .. 60.00 sec; ∞	0.30 sec	T I> Time Delay
3021	Ip	Phase O/C 2	1A	0.10 .. 4.00 A	2.00 A	Ip Pickup
			5A	0.50 .. 20.00 A	10.00 A	
3022	Ip	Phase O/C 2		0.10 .. 4.00 I/InS	2.00 I/InS	Ip Pickup
3023	T Ip	Phase O/C 2		0.05 .. 3.20 sec; ∞	0.50 sec	T Ip Time Dial
3024	D Ip	Phase O/C 2		0.50 .. 15.00 ; ∞	5.00	D Ip Time Dial
3025	TOC DROP-OUT	Phase O/C 2		Instantaneous Disk Emulation	Disk Emulation	TOC Drop-out characteristic
3026	IEC CURVE	Phase O/C 2		Normal Inverse Very Inverse Extremely Inv. Long Inverse	Normal Inverse	IEC Curve

Addr.	Parameter	Function	C	Setting Options	Default Setting	Comments
3027	ANSI CURVE	Phase O/C 2		Very Inverse Inverse Short Inverse Long Inverse Moderately Inv. Extremely Inv. Definite Inv.	Very Inverse	ANSI Curve
3031	I/Ip PU T/Tp	Phase O/C 2		1.00 .. 20.00 I/Ip; ∞ 0.01 .. 999.00 TD		Pickup Curve I/Ip - TI/TIp
3032	MofPU Res T/Tp	Phase O/C 2		0.05 .. 0.95 I/Ip; ∞ 0.01 .. 999.00 TD		Multiple of Pickup <-> TI/TIp
3041	2.HARM. Phase	Phase O/C 2		10 .. 45 %	15 %	2nd harmonic O/C Ph. in % of fundamental
3042	I Max InRr. Ph.	Phase O/C 2	1A	0.30 .. 25.00 A	7.50 A	Maximum Current for Inr. Rest. O/C Phase
			5A	1.50 .. 125.00 A	37.50 A	
3043	I Max InRr. Ph.	Phase O/C 2		0.30 .. 25.00 I/InS	7.50 I/InS	Maximum Current for Inr. Rest. O/C Phase
3044	CROSS BLK.Phase	Phase O/C 2		NO YES	NO	CROSS BLOCK O/C Phase
3045	T CROSS BLK.Ph	Phase O/C 2		0.00 .. 180.00 sec	0.00 sec	CROSS BLOCK Time O/C Phase
3111	I>>	Phase O/C 2	1A	0.10 .. 35.00 A; ∞	10.00 A	I>> Pickup
			5A	0.50 .. 175.00 A; ∞	50.00 A	
3112	I>>	Phase O/C 2		0.10 .. 35.00 I/InS; ∞	10.00 I/InS	I>> Pickup
3113	T I>>	Phase O/C 2		0.00 .. 60.00 sec; ∞	0.10 sec	T I>> Time Delay
3114	I>	Phase O/C 2	1A	0.10 .. 35.00 A; ∞	4.00 A	I> Pickup
			5A	0.50 .. 175.00 A; ∞	20.00 A	
3115	I>	Phase O/C 2		0.10 .. 35.00 I/InS; ∞	4.00 I/InS	I> Pickup
3116	T I>	Phase O/C 2		0.00 .. 60.00 sec; ∞	0.30 sec	T I> Time Delay
3121	Ip	Phase O/C 2	1A	0.10 .. 4.00 A	4.00 A	Ip Pickup
			5A	0.50 .. 20.00 A	20.00 A	
3122	Ip	Phase O/C 2		0.10 .. 4.00 I/InS	4.00 I/InS	Ip Pickup
3123	T Ip	Phase O/C 2		0.05 .. 3.20 sec; ∞	0.50 sec	T Ip Time Dial
3124	D Ip	Phase O/C 2		0.50 .. 15.00 ; ∞	5.00	D Ip Time Dial
3201	PHASE O/C	Phase O/C 3		ON OFF Block relay	OFF	Phase Time Overcurrent
3202	InRushRest. Ph	Phase O/C 3		ON OFF	OFF	InRush Restrained O/C Phase
3208A	MANUAL CLOSE	Phase O/C 3		I>> instant. I> instant. Ip instant. Inactive	I>> instant.	O/C Manual Close Mode
3211	I>>	Phase O/C 3	1A	0.10 .. 35.00 A; ∞	4.00 A	I>> Pickup
			5A	0.50 .. 175.00 A; ∞	20.00 A	
3212	I>>	Phase O/C 3		0.10 .. 35.00 I/InS; ∞	4.00 I/InS	I>> Pickup
3213	T I>>	Phase O/C 3		0.00 .. 60.00 sec; ∞	0.10 sec	T I>> Time Delay
3214	I>	Phase O/C 3	1A	0.10 .. 35.00 A; ∞	2.00 A	I> Pickup
			5A	0.50 .. 175.00 A; ∞	10.00 A	
3215	I>	Phase O/C 3		0.10 .. 35.00 I/InS; ∞	2.00 I/InS	I> Pickup
3216	T I>	Phase O/C 3		0.00 .. 60.00 sec; ∞	0.30 sec	T I> Time Delay
3221	Ip	Phase O/C 3	1A	0.10 .. 4.00 A	2.00 A	Ip Pickup
			5A	0.50 .. 20.00 A	10.00 A	
3222	Ip	Phase O/C 3		0.10 .. 4.00 I/InS	2.00 I/InS	Ip Pickup
3223	T Ip	Phase O/C 3		0.05 .. 3.20 sec; ∞	0.50 sec	T Ip Time Dial
3224	D Ip	Phase O/C 3		0.50 .. 15.00 ; ∞	5.00	D Ip Time Dial
3225	TOC DROP-OUT	Phase O/C 3		Instantaneous Disk Emulation	Disk Emulation	TOC Drop-out characteristic
3226	IEC CURVE	Phase O/C 3		Normal Inverse Very Inverse Extremely Inv. Long Inverse	Normal Inverse	IEC Curve

Addr.	Parameter	Function	C	Setting Options	Default Setting	Comments
3227	ANSI CURVE	Phase O/C 3		Very Inverse Inverse Short Inverse Long Inverse Moderately Inv. Extremely Inv. Definite Inv.	Very Inverse	ANSI Curve
3231	I/Ip PU T/Tp	Phase O/C 3		1.00 .. 20.00 I/Ip; ∞ 0.01 .. 999.00 TD		Pickup Curve I/Ip - TI/TIp
3232	MofPU Res T/Tp	Phase O/C 3		0.05 .. 0.95 I/Ip; ∞ 0.01 .. 999.00 TD		Multiple of Pickup <-> TI/TIp
3241	2.HARM. Phase	Phase O/C 3		10 .. 45 %	15 %	2nd harmonic O/C Ph. in % of fundamental
3242	I Max InRr. Ph.	Phase O/C 3	1A	0.30 .. 25.00 A	7.50 A	Maximum Current for Inr. Rest. O/C Phase
			5A	1.50 .. 125.00 A	37.50 A	
3243	I Max InRr. Ph.	Phase O/C 3		0.30 .. 25.00 I/InS	7.50 I/InS	Maximum Current for Inr. Rest. O/C Phase
3244	CROSS BLK.Phase	Phase O/C 3		NO YES	NO	CROSS BLOCK O/C Phase
3245	T CROSS BLK.Ph	Phase O/C 3		0.00 .. 180.00 sec	0.00 sec	CROSS BLOCK Time O/C Phase
3311	I>>	Phase O/C 3	1A	0.10 .. 35.00 A; ∞	10.00 A	I>> Pickup
			5A	0.50 .. 175.00 A; ∞	50.00 A	
3312	I>>	Phase O/C 3		0.10 .. 35.00 I/InS; ∞	10.00 I/InS	I>> Pickup
3313	T I>>	Phase O/C 3		0.00 .. 60.00 sec; ∞	0.10 sec	T I>> Time Delay
3314	I>	Phase O/C 3	1A	0.10 .. 35.00 A; ∞	4.00 A	I> Pickup
			5A	0.50 .. 175.00 A; ∞	20.00 A	
3315	I>	Phase O/C 3		0.10 .. 35.00 I/InS; ∞	4.00 I/InS	I> Pickup
3316	T I>	Phase O/C 3		0.00 .. 60.00 sec; ∞	0.30 sec	T I> Time Delay
3321	Ip	Phase O/C 3	1A	0.10 .. 4.00 A	4.00 A	Ip Pickup
			5A	0.50 .. 20.00 A	20.00 A	
3322	Ip	Phase O/C 3		0.10 .. 4.00 I/InS	4.00 I/InS	Ip Pickup
3323	T Ip	Phase O/C 3		0.05 .. 3.20 sec; ∞	0.50 sec	T Ip Time Dial
3324	D Ip	Phase O/C 3		0.50 .. 15.00 ; ∞	5.00	D Ip Time Dial
3401	3I0 O/C	3I0 O/C 2		ON OFF Block relay	OFF	3I0 Time Overcurrent
3402	InRushRest. 3I0	3I0 O/C 2		ON OFF	OFF	InRush Restrained O/C 3I0
3408A	3I0 MAN. CLOSE	3I0 O/C 2		3I0>> instant. 3I0> instant. 3I0p instant. Inactive	3I0>> instant.	O/C 3I0 Manual Close Mode
3411	3I0>>	3I0 O/C 2	1A	0.05 .. 35.00 A; ∞	1.00 A	3I0>> Pickup
			5A	0.25 .. 175.00 A; ∞	5.00 A	
3412	3I0>>	3I0 O/C 2		0.05 .. 35.00 I/InS; ∞	1.00 I/InS	3I0>> Pickup
3413	T 3I0>>	3I0 O/C 2		0.00 .. 60.00 sec; ∞	1.50 sec	T 3I0>> Time Delay
3414	3I0>	3I0 O/C 2	1A	0.05 .. 35.00 A; ∞	0.40 A	3I0> Pickup
			5A	0.25 .. 175.00 A; ∞	2.00 A	
3415	3I0>	3I0 O/C 2		0.05 .. 35.00 I/InS; ∞	0.40 I/InS	3I0> Pickup
3416	T 3I0>	3I0 O/C 2		0.00 .. 60.00 sec; ∞	2.00 sec	T 3I0> Time Delay
3421	3I0p	3I0 O/C 2	1A	0.05 .. 4.00 A	0.40 A	3I0p Pickup
			5A	0.25 .. 20.00 A	2.00 A	
3422	3I0p	3I0 O/C 2		0.05 .. 4.00 I/InS	0.40 I/InS	3I0p Pickup
3423	T 3I0p	3I0 O/C 2		0.05 .. 3.20 sec; ∞	0.50 sec	T 3I0p Time Dial
3424	D 3I0p	3I0 O/C 2		0.50 .. 15.00 ; ∞	5.00	D 3I0p Time Dial
3425	TOC DROP-OUT	3I0 O/C 2		Instantaneous Disk Emulation	Disk Emulation	TOC Drop-out Characteristic
3426	IEC CURVE	3I0 O/C 2		Normal Inverse Very Inverse Extremely Inv. Long Inverse	Normal Inverse	IEC Curve

Addr.	Parameter	Function	C	Setting Options	Default Setting	Comments
3427	ANSI CURVE	3I0 O/C 2		Very Inverse Inverse Short Inverse Long Inverse Moderately Inv. Extremely Inv. Definite Inv.	Very Inverse	ANSI Curve
3431	I/I0p PU T/TI0p	3I0 O/C 2		1.00 .. 20.00 I/Ip; ∞ 0.01 .. 999.00 TD		Pickup Curve 3I0/3I0p - T3I0/T3I0p
3432	MofPU ResT/TI0p	3I0 O/C 2		0.05 .. 0.95 I/Ip; ∞ 0.01 .. 999.00 TD		Multiple of Pickup <-> T3I0/T3I0p
3441	2.HARM. 3I0	3I0 O/C 2		10 .. 45 %	15 %	2nd harmonic O/C 3I0 in % of fundamental
3442	I Max InRr. 3I0	3I0 O/C 2	1A	0.30 .. 25.00 A	7.50 A	Maximum Current for Inr. Rest. O/C 3I0
			5A	1.50 .. 125.00 A	37.50 A	
3443	I Max InRr. 3I0	3I0 O/C 2		0.30 .. 25.00 I/InS	7.50 I/InS	Maximum Current for Inr. Rest. O/C 3I0
3511	3I0>>	3I0 O/C 2	1A	0.05 .. 35.00 A; ∞	7.00 A	3I0>> Pickup
			5A	0.25 .. 175.00 A; ∞	35.00 A	
3512	3I0>>	3I0 O/C 2		0.05 .. 35.00 I/InS; ∞	7.00 I/InS	3I0>> Pickup
3513	T 3I0>>	3I0 O/C 2		0.00 .. 60.00 sec; ∞	1.50 sec	T 3I0>> Time Delay
3514	3I0>	3I0 O/C 2	1A	0.05 .. 35.00 A; ∞	1.50 A	3I0> Pickup
			5A	0.25 .. 175.00 A; ∞	7.50 A	
3515	3I0>	3I0 O/C 2		0.05 .. 35.00 I/InS; ∞	1.50 I/InS	3I0> Pickup
3516	T 3I0>	3I0 O/C 2		0.00 .. 60.00 sec; ∞	2.00 sec	T 3I0> Time Delay
3521	3I0p	3I0 O/C 2	1A	0.05 .. 4.00 A	1.00 A	3I0p Pickup
			5A	0.25 .. 20.00 A	5.00 A	
3522	3I0p	3I0 O/C 2		0.05 .. 4.00 I/InS	1.00 I/InS	3I0p Pickup
3523	T 3I0p	3I0 O/C 2		0.05 .. 3.20 sec; ∞	0.50 sec	T 3I0p Time Dial
3524	D 3I0p	3I0 O/C 2		0.50 .. 15.00 ; ∞	5.00	D 3I0p Time Dial
3601	3I0 O/C	3I0 O/C 3		ON OFF Block relay	OFF	3I0 Time Overcurrent
3602	InRushRest. 3I0	3I0 O/C 3		ON OFF	OFF	InRush Restrained O/C 3I0
3608A	3I0 MAN. CLOSE	3I0 O/C 3		3I0>> instant. 3I0> instant. 3I0p instant. Inactive	3I0>> instant.	O/C 3I0 Manual Close Mode
3611	3I0>>	3I0 O/C 3	1A	0.05 .. 35.00 A; ∞	1.00 A	3I0>> Pickup
			5A	0.25 .. 175.00 A; ∞	5.00 A	
3612	3I0>>	3I0 O/C 3		0.05 .. 35.00 I/InS; ∞	1.00 I/InS	3I0>> Pickup
3613	T 3I0>>	3I0 O/C 3		0.00 .. 60.00 sec; ∞	1.50 sec	T 3I0>> Time Delay
3614	3I0>	3I0 O/C 3	1A	0.05 .. 35.00 A; ∞	0.40 A	3I0> Pickup
			5A	0.25 .. 175.00 A; ∞	2.00 A	
3615	3I0>	3I0 O/C 3		0.05 .. 35.00 I/InS; ∞	0.40 I/InS	3I0> Pickup
3616	T 3I0>	3I0 O/C 3		0.00 .. 60.00 sec; ∞	2.00 sec	T 3I0> Time Delay
3621	3I0p	3I0 O/C 3	1A	0.05 .. 4.00 A	0.40 A	3I0p Pickup
			5A	0.25 .. 20.00 A	2.00 A	
3622	3I0p	3I0 O/C 3		0.05 .. 4.00 I/InS	0.40 I/InS	3I0p Pickup
3623	T 3I0p	3I0 O/C 3		0.05 .. 3.20 sec; ∞	0.50 sec	T 3I0p Time Dial
3624	D 3I0p	3I0 O/C 3		0.50 .. 15.00 ; ∞	5.00	D 3I0p Time Dial
3625	TOC DROP-OUT	3I0 O/C 3		Instantaneous Disk Emulation	Disk Emulation	TOC Drop-out Characteristic
3626	IEC CURVE	3I0 O/C 3		Normal Inverse Very Inverse Extremely Inv. Long Inverse	Normal Inverse	IEC Curve

Addr.	Parameter	Function	C	Setting Options	Default Setting	Comments
3627	ANSI CURVE	3I0 O/C 3		Very Inverse Inverse Short Inverse Long Inverse Moderately Inv. Extremely Inv. Definite Inv.	Very Inverse	ANSI Curve
3631	I/I0p PU T/TI0p	3I0 O/C 3		1.00 .. 20.00 I/Ip; ∞ 0.01 .. 999.00 TD		Pickup Curve 3I0/3I0p - T3I0/T3I0p
3632	MofPU ResT/TI0p	3I0 O/C 3		0.05 .. 0.95 I/Ip; ∞ 0.01 .. 999.00 TD		Multiple of Pickup <-> T3I0/T3I0p
3641	2.HARM. 3I0	3I0 O/C 3		10 .. 45 %	15 %	2nd harmonic O/C 3I0 in % of fundamental
3642	I Max InRr. 3I0	3I0 O/C 3	1A	0.30 .. 25.00 A	7.50 A	Maximum Current for Inr. Rest. O/C 3I0
			5A	1.50 .. 125.00 A	37.50 A	
3643	I Max InRr. 3I0	3I0 O/C 3		0.30 .. 25.00 I/InS	7.50 I/InS	Maximum Current for Inr. Rest. O/C 3I0
3711	3I0>>	3I0 O/C 3	1A	0.05 .. 35.00 A; ∞	7.00 A	3I0>> Pickup
			5A	0.25 .. 175.00 A; ∞	35.00 A	
3712	3I0>>	3I0 O/C 3		0.05 .. 35.00 I/InS; ∞	7.00 I/InS	3I0>> Pickup
3713	T 3I0>>	3I0 O/C 3		0.00 .. 60.00 sec; ∞	1.50 sec	T 3I0>> Time Delay
3714	3I0>	3I0 O/C 3	1A	0.05 .. 35.00 A; ∞	1.50 A	3I0> Pickup
			5A	0.25 .. 175.00 A; ∞	7.50 A	
3715	3I0>	3I0 O/C 3		0.05 .. 35.00 I/InS; ∞	1.50 I/InS	3I0> Pickup
3716	T 3I0>	3I0 O/C 3		0.00 .. 60.00 sec; ∞	2.00 sec	T 3I0> Time Delay
3721	3I0p	3I0 O/C 3	1A	0.05 .. 4.00 A	1.00 A	3I0p Pickup
			5A	0.25 .. 20.00 A	5.00 A	
3722	3I0p	3I0 O/C 3		0.05 .. 4.00 I/InS	1.00 I/InS	3I0p Pickup
3723	T 3I0p	3I0 O/C 3		0.05 .. 3.20 sec; ∞	0.50 sec	T 3I0p Time Dial
3724	D 3I0p	3I0 O/C 3		0.50 .. 15.00 ; ∞	5.00	D 3I0p Time Dial
3801	EARTH O/C	Earth O/C 2		ON OFF Block relay	OFF	Earth Time Overcurrent
3802	InRushRestEarth	Earth O/C 2		ON OFF	OFF	InRush Restrained O/C Earth
3808A	IE MAN. CLOSE	Earth O/C 2		IE>> instant. IE> instant. IEp instant. Inactive	IE>> instant.	O/C IE Manual Close Mode
3811	IE>>	Earth O/C 2	1A	0.05 .. 35.00 A; ∞	1.00 A	IE>> Pickup
			5A	0.25 .. 175.00 A; ∞	5.00 A	
3812	T IE>>	Earth O/C 2		0.00 .. 60.00 sec; ∞	1.50 sec	T IE>> Time Delay
3813	IE>	Earth O/C 2	1A	0.05 .. 35.00 A; ∞	0.40 A	IE> Pickup
			5A	0.25 .. 175.00 A; ∞	2.00 A	
3814	T IE>	Earth O/C 2		0.00 .. 60.00 sec; ∞	2.00 sec	T IE> Time Delay
3821	IEp	Earth O/C 2	1A	0.05 .. 4.00 A	0.40 A	IEp Pickup
			5A	0.25 .. 20.00 A	2.00 A	
3822	T IEp	Earth O/C 2		0.05 .. 3.20 sec; ∞	0.50 sec	T IEp Time Dial
3823	D IEp	Earth O/C 2		0.50 .. 15.00 ; ∞	5.00	D IEp Time Dial
3824	TOC DROP-OUT	Earth O/C 2		Instantaneous Disk Emulation	Disk Emulation	TOC Drop-out Characteristic
3825	IEC CURVE	Earth O/C 2		Normal Inverse Very Inverse Extremely Inv. Long Inverse	Normal Inverse	IEC Curve
3826	ANSI CURVE	Earth O/C 2		Very Inverse Inverse Short Inverse Long Inverse Moderately Inv. Extremely Inv. Definite Inv.	Very Inverse	ANSI Curve

Addr.	Parameter	Function	C	Setting Options	Default Setting	Comments
3831	I/IEp PU T/TEp	Earth O/C 2		1.00 .. 20.00 I/Ip; ∞ 0.01 .. 999.00 TD		Pickup Curve IE/IEp - TIE/TIEp
3832	MofPU Res T/TEp	Earth O/C 2		0.05 .. 0.95 I/Ip; ∞ 0.01 .. 999.00 TD		Multiple of Pickup <-> TI/TIEp
3841	2.HARM. Earth	Earth O/C 2		10 .. 45 %	15 %	2nd harmonic O/C E in % of fundamental
3842	I Max InRr. E	Earth O/C 2	1A	0.30 .. 25.00 A	7.50 A	Maximum Current for Inr. Rest. O/C Earth
			5A	1.50 .. 125.00 A	37.50 A	
3911	IE>>	Earth O/C 2	1A	0.05 .. 35.00 A; ∞	7.00 A	IE>> Pickup
			5A	0.25 .. 175.00 A; ∞	35.00 A	
3912	T IE>>	Earth O/C 2		0.00 .. 60.00 sec; ∞	1.50 sec	T IE>> Time Delay
3913	IE>	Earth O/C 2	1A	0.05 .. 35.00 A; ∞	1.50 A	IE> Pickup
			5A	0.25 .. 175.00 A; ∞	7.50 A	
3914	T IE>	Earth O/C 2		0.00 .. 60.00 sec; ∞	2.00 sec	T IE> Time Delay
3921	IEp	Earth O/C 2	1A	0.05 .. 4.00 A	1.00 A	IEp Pickup
			5A	0.25 .. 20.00 A	5.00 A	
3922	T IEp	Earth O/C 2		0.05 .. 3.20 sec; ∞	0.50 sec	T IEp Time Dial
3923	D IEp	Earth O/C 2		0.50 .. 15.00 ; ∞	5.00	D IEp Time Dial
4001	UNBALANCE LOAD	Unbalance Load		OFF ON Block relay	OFF	Unbalance Load (Negative Sequence)
4011	I2>>	Unbalance Load	1A	0.10 .. 3.00 A; ∞	0.50 A	I2>> Pickup
			5A	0.50 .. 15.00 A; ∞	2.50 A	
4012	I2>>	Unbalance Load		0.10 .. 3.00 I/InS; ∞	0.50 I/InS	I2>> Pickup
4013	T I2>>	Unbalance Load		0.00 .. 60.00 sec; ∞	1.50 sec	T I2>> Time Delay
4014	I2>	Unbalance Load	1A	0.10 .. 3.00 A; ∞	0.10 A	I2> Pickup
			5A	0.50 .. 15.00 A; ∞	0.50 A	
4015	I2>	Unbalance Load		0.10 .. 3.00 I/InS; ∞	0.10 I/InS	I2> Pickup
4016	T I2>	Unbalance Load		0.00 .. 60.00 sec; ∞	1.50 sec	T I2> Time Delay
4021	I2p	Unbalance Load	1A	0.10 .. 2.00 A	0.90 A	I2p Pickup
			5A	0.50 .. 10.00 A	4.50 A	
4022	I2p	Unbalance Load		0.10 .. 2.00 I/InS	0.90 I/InS	I2p Pickup
4023	T I2p	Unbalance Load		0.05 .. 3.20 sec; ∞	0.50 sec	T I2p Time Dial
4024	D I2p	Unbalance Load		0.50 .. 15.00 ; ∞	5.00	D I2p Time Dial
4025	I2p DROP-OUT	Unbalance Load		Instantaneous Disk Emulation	Instantaneous	I2p Drop-out Characteristic
4026	IEC CURVE	Unbalance Load		Normal Inverse Very Inverse Extremely Inv.	Extremely Inv.	IEC Curve
4027	ANSI CURVE	Unbalance Load		Extremely Inv. Inverse Moderately Inv. Very Inverse	Extremely Inv.	ANSI Curve
4031	I2>	Unbalance Load	1A	0.01 .. 8.00 A; ∞	0.10 A	Continously Permissible Current I2
			5A	0.05 .. 40.00 A; ∞	0.50 A	
4032	I2 tolerance	Unbalance Load		0.01 .. 0.80 I/InS; ∞	0.16 I/InS	Permissable quiescent unbalanced load
4033	T WARN	Unbalance Load		0.00 .. 60.00 sec; ∞	20.00 sec	Warning Stage Time Delay
4034	FACTOR K	Unbalance Load		1.0 .. 100.0 sec; ∞	18.7 sec	Negativ Sequence Factor K
4035	T COOL DOWN	Unbalance Load		0 .. 50000 sec	1650 sec	Time for Cooling Down
4201	THERM. OVERLOAD	Therm. Overload		OFF ON Block relay Alarm Only	OFF	Thermal Overload Protection
4202	K-FACTOR	Therm. Overload		0.10 .. 4.00	1.10	K-Factor
4203	TIME CONSTANT	Therm. Overload		1.0 .. 999.9 min	100.0 min	Thermal Time Constant
4204	Θ ALARM	Therm. Overload		50 .. 100 %	90 %	Thermal Alarm Stage
4205	I ALARM	Therm. Overload		0.10 .. 4.00 I/InS	1.00 I/InS	Current Overload Alarm Setpoint
4207A	Kτ-FACTOR	Therm. Overload		1.0 .. 10.0	1.0	Kt-FACTOR when motor stops

Addr.	Parameter	Function	C	Setting Options	Default Setting	Comments
4208A	T EMERGENCY	Therm. Overload		10 .. 15000 sec	100 sec	Emergency Time
4209A	I MOTOR START	Therm. Overload		0.60 .. 10.00 I/InS; ∞	∞ I/InS	Current Pickup Value of Motor Starting
4210	TEMPSENSOR RTD	Therm. Overload		1 .. 6	1	Temperature sensor connected to RTD
4211	TEMPSENSOR RTD	Therm. Overload		1 .. 12	1	Temperature sensor connected to RTD
4212	TEMP. RISE I	Therm. Overload		40 .. 200 °C	100 °C	Temperature Rise at Rated Sec. Curr.
4213	TEMP. RISE I	Therm. Overload		104 .. 392 °F	212 °F	Temperature Rise at Rated Sec. Curr.
4220	OIL-DET. RTD	Therm. Overload		1 .. 6	1	Oil-Detector conected at RTD
4221	OIL Sensor RTD	Therm. Overload		1 .. 12	1	Oil sensor connected to RTD
4222	HOT SPOT ST. 1	Therm. Overload		98 .. 140 °C	98 °C	Hot Spot Temperature Stage 1 Pickup
4223	HOT SPOT ST. 1	Therm. Overload		208 .. 284 °F	208 °F	Hot Spot Temperature Stage 1 Pickup
4224	HOT SPOT ST. 2	Therm. Overload		98 .. 140 °C	108 °C	Hot Spot Temperature Stage 2 Pickup
4225	HOT SPOT ST. 2	Therm. Overload		208 .. 284 °F	226 °F	Hot Spot Temperature Stage 2 Pickup
4226	AG. RATE ST. 1	Therm. Overload		0.200 .. 128.000	1.000	Aging Rate STAGE 1 Pickup
4227	AG. RATE ST. 2	Therm. Overload		0.200 .. 128.000	2.000	Aging Rate STAGE 2 Pickup
4231	METH. COOLING	Therm. Overload		ON OF OD	ON	Method of Cooling
4232	Y-WIND.EXPONENT	Therm. Overload		1.6 .. 2.0	1.6	Y-Winding Exponent
4233	HOT-SPOT GR	Therm. Overload		22 .. 29	22	Hot-spot to top-oil gradient
4301	OVEREXC. PROT.	Overexcit.		OFF ON Block relay	OFF	Overexcitation Protection (U/f)
4302	U/f >	Overexcit.		1.00 .. 1.20	1.10	U/f > Pickup
4303	T U/f >	Overexcit.		0.00 .. 60.00 sec; ∞	10.00 sec	T U/f > Time Delay
4304	U/f >>	Overexcit.		1.00 .. 1.40	1.40	U/f >> Pickup
4305	T U/f >>	Overexcit.		0.00 .. 60.00 sec; ∞	1.00 sec	T U/f >> Time Delay
4306	t(U/f=1.05)	Overexcit.		0 .. 20000 sec	20000 sec	U/f = 1.05 Time Delay
4307	t(U/f=1.10)	Overexcit.		0 .. 20000 sec	6000 sec	U/f = 1.10 Time Delay
4308	t(U/f=1.15)	Overexcit.		0 .. 20000 sec	240 sec	U/f = 1.15 Time Delay
4309	t(U/f=1.20)	Overexcit.		0 .. 20000 sec	60 sec	U/f = 1.20 Time Delay
4310	t(U/f=1.25)	Overexcit.		0 .. 20000 sec	30 sec	U/f = 1.25 Time Delay
4311	t(U/f=1.30)	Overexcit.		0 .. 20000 sec	19 sec	U/f = 1.30 Time Delay
4312	t(U/f=1.35)	Overexcit.		0 .. 20000 sec	13 sec	U/f = 1.35 Time Delay
4313	t(U/f=1.40)	Overexcit.		0 .. 20000 sec	10 sec	U/f = 1.40 Time Delay
4314	T COOL DOWN	Overexcit.		0 .. 20000 sec	3600 sec	Time for cool down
4401	THERM. OVERLOAD	Therm.Overload2		OFF ON Block relay Alarm Only	OFF	Thermal Overload Protection
4402	K-FACTOR	Therm.Overload2		0.10 .. 4.00	1.10	K-Factor
4403	TIME CONSTANT	Therm.Overload2		1.0 .. 999.9 min	100.0 min	Thermal Time Constant
4404	Θ ALARM	Therm.Overload2		50 .. 100 %	90 %	Thermal Alarm Stage
4405	I ALARM	Therm.Overload2		0.10 .. 4.00 I/InS	1.00 I/InS	Current Overload Alarm Setpoint
4407A	Kτ-FACTOR	Therm.Overload2		1.0 .. 10.0	1.0	Kt-FACTOR when motor stops
4408A	T EMERGENCY	Therm.Overload2		10 .. 15000 sec	100 sec	Emergency Time
4409A	I MOTOR START	Therm.Overload2		0.60 .. 10.00 I/InS; ∞	∞ I/InS	Current Pickup Value of Motor Starting
4410	TEMPSENSOR RTD	Therm.Overload2		1 .. 6	1	Temperature sensor connected to RTD
4411	TEMPSENSOR RTD	Therm.Overload2		1 .. 12	1	Temperature sensor connected to RTD

Addr.	Parameter	Function	C	Setting Options	Default Setting	Comments
4412	TEMP. RISE I	Therm.Overload2		40 .. 200 °C	100 °C	Temperature Rise at Rated Sec. Curr.
4413	TEMP. RISE I	Therm.Overload2		104 .. 392 °F	212 °F	Temperature Rise at Rated Sec. Curr.
4420	OIL-DET. RTD	Therm.Overload2		1 .. 6	1	Oil-Detector conected at RTD
4421	OIL Sensor RTD	Therm.Overload2		1 .. 12	1	Oil sensor connected to RTD
4422	HOT SPOT ST. 1	Therm.Overload2		98 .. 140 °C	98 °C	Hot Spot Temperature Stage 1 Pickup
4423	HOT SPOT ST. 1	Therm.Overload2		208 .. 284 °F	208 °F	Hot Spot Temperature Stage 1 Pickup
4424	HOT SPOT ST. 2	Therm.Overload2		98 .. 140 °C	108 °C	Hot Spot Temperature Stage 2 Pickup
4425	HOT SPOT ST. 2	Therm.Overload2		208 .. 284 °F	226 °F	Hot Spot Temperature Stage 2 Pickup
4426	AG. RATE ST. 1	Therm.Overload2		0.200 .. 128.000	1.000	Aging Rate STAGE 1 Pickup
4427	AG. RATE ST. 2	Therm.Overload2		0.200 .. 128.000	2.000	Aging Rate STAGE 2 Pickup
4431	METH. COOLING	Therm.Overload2		ON OF OD	ON	Method of Cooling
4432	Y-WIND.EXPONENT	Therm.Overload2		1.6 .. 2.0	1.6	Y-Winding Exponent
4433	HOT-SPOT GR	Therm.Overload2		22 .. 29	22	Hot-spot to top-oil gradient
5001	REVERSE POWER	Reverse Power		OFF ON Block relay	OFF	Reverse Power Protection
5011	P> REVERSE	Reverse Power	1A	-3000.0 .. -1.7 W	-8.7 W	P> Reverse Pickup
			5A	-15000.0 .. -8.5 W	-43.5 W	
5012	Pr pick-up	Reverse Power		-17.00 .. -0.01 P/SnS	-0.05 P/SnS	Pick-up threshold reverse power
5013	T-SV-OPEN	Reverse Power		0.00 .. 60.00 sec; ∞	10.00 sec	Time Delay Long (without Stop Valve)
5014	T-SV-CLOSED	Reverse Power		0.00 .. 60.00 sec; ∞	1.00 sec	Time Delay Short (with Stop Valve)
5015A	T-HOLD	Reverse Power		0.00 .. 60.00 sec; ∞	0.00 sec	Pickup Holding Time
5016A	Type of meas.	Reverse Power		accurate fast	accurate	Type of measurement
5101	FORWARD POWER	Forward Power		OFF ON Block relay	OFF	Forward Power Supervision
5111	Pf<	Forward Power	1A	1.7 .. 3000.0 W	17.3 W	P-forw.< Supervision Pickup
			5A	8.5 .. 15000.0 W	86.5 W	
5112	P< fwd	Forward Power		0.01 .. 17.00 P/SnS	0.10 P/SnS	Pick-up threshold P<
5113	T-Pf<	Forward Power		0.00 .. 60.00 sec; ∞	10.00 sec	T-P-forw.< Time Delay
5114	Pf>	Forward Power	1A	1.7 .. 3000.0 W	164.5 W	P-forw.> Supervision Pickup
			5A	8.5 .. 15000.0 W	822.5 W	
5115	P> fwd	Forward Power		0.01 .. 17.00 P/SnS	0.95 P/SnS	Pick-up threshold P>
5116	T-Pf>	Forward Power		0.00 .. 60.00 sec; ∞	10.00 sec	T-P-forw.> Time Delay
5117A	MEAS. METHOD	Forward Power		accurate fast	accurate	Method of Operation
5201	UNDERVOLTAGE	Undervoltage		OFF ON Block relay	OFF	Undervoltage Protection
5211	U<	Undervoltage		10.0 .. 125.0 V	75.0 V	U< Pickup
5212	U<	Undervoltage		0.10 .. 1.25 U/UnS	0.75 U/UnS	Pick-up voltage U<
5213	T U<	Undervoltage		0.00 .. 60.00 sec; ∞	3.00 sec	T U< Time Delay
5214	U<<	Undervoltage		10.0 .. 125.0 V	65.0 V	U<< Pickup
5215	U<<	Undervoltage		0.10 .. 1.25 U/UnS	0.65 U/UnS	Pick-up voltage U<<
5216	T U<<	Undervoltage		0.00 .. 60.00 sec; ∞	0.50 sec	T U<< Time Delay
5217A	DOUT RATIO	Undervoltage		1.01 .. 1.20	1.05	U<, U<< Drop Out Ratio
5301	OVERVOLTAGE	Overvoltage		OFF ON Block relay	OFF	Overvoltage Protection
5311	U>	Overvoltage		30.0 .. 170.0 V	115.0 V	U> Pickup

Addr.	Parameter	Function	C	Setting Options	Default Setting	Comments
5312	U>	Overvoltage		0.30 .. 1.70 U/UnS	1.15 U/UnS	Pick-up voltage U>
5313	T U>	Overvoltage		0.00 .. 60.00 sec; ∞	3.00 sec	T U> Time Delay
5314	U>>	Overvoltage		30.0 .. 170.0 V	130.0 V	U>> Pickup
5315	U>>	Overvoltage		0.30 .. 1.70 U/UnS	1.30 U/UnS	Pick-up voltage U>>
5316	T U>>	Overvoltage		0.00 .. 60.00 sec; ∞	0.50 sec	T U>> Time Delay
5317A	DOUT RATIO	Overvoltage		0.90 .. 0.99	0.95	U>, U>> Drop Out Ratio
5318A	VALUES	Overvoltage		U-ph-ph U-ph-e	U-ph-ph	Measurement Values
5601	O/U FREQUENCY	Frequency Prot.		OFF ON Block relay	OFF	Over / Under Frequency Protection
5611	f<	Frequency Prot.		40.00 .. 49.99 Hz; 0	49.50 Hz	Pick-up frequency f<
5612	f<<	Frequency Prot.		40.00 .. 49.99 Hz; 0	48.00 Hz	Pick-up frequency f<<
5613	f<<<	Frequency Prot.		40.00 .. 49.99 Hz; 0	47.00 Hz	Pick-up frequency f<<<
5614	f>	Frequency Prot.		50.01 .. 66.00 Hz; ∞	52.00 Hz	Pick-up frequency f>
5621	f<	Frequency Prot.		50.00 .. 59.99 Hz; 0	59.50 Hz	Pick-up frequency f<
5622	f<<	Frequency Prot.		50.00 .. 59.99 Hz; 0	58.00 Hz	Pick-up frequency f<<
5623	f<<<	Frequency Prot.		50.00 .. 59.99 Hz; 0	57.00 Hz	Pick-up frequency f<<<
5624	f>	Frequency Prot.		60.01 .. 66.00 Hz; ∞	62.00 Hz	Pick-up frequency f>
5631	f<	Frequency Prot.		10.00 .. 16.69 Hz; 0	16.50 Hz	Pick-up frequency f<
5632	f<<	Frequency Prot.		10.00 .. 16.69 Hz; 0	16.00 Hz	Pick-up frequency f<<
5633	f<<<	Frequency Prot.		10.00 .. 16.69 Hz; 0	15.70 Hz	Pick-up frequency f<<<
5634	f>	Frequency Prot.		16.67 .. 22.00 Hz; ∞	17.40 Hz	Pick-up frequency f>
5641	T f<	Frequency Prot.		0.00 .. 100.00 sec; ∞	20.00 sec	Delay time T f<
5642	T f<<	Frequency Prot.		0.00 .. 600.00 sec; ∞	1.00 sec	Delay time T f<<
5643	T f<<<	Frequency Prot.		0.00 .. 100.00 sec; ∞	6.00 sec	Delay time T f<<<
5644	T f>	Frequency Prot.		0.00 .. 100.00 sec; ∞	10.00 sec	Delay time T f>
5651	Umin	Frequency Prot.		10.0 .. 125.0 V; 0	65.0 V	Minimum Required Voltage for Operation
5652	U MIN	Frequency Prot.		0.10 .. 1.25 U/UnS; 0	0.65 U/UnS	Minimum voltage
7001	BREAKER FAILURE	Breaker Failure		OFF ON Block relay	OFF	Breaker Failure Protection
7011	START WITH REL.	Breaker Failure		0 .. 8	0	Start with Relay (intern)
7012	START WITH REL.	Breaker Failure		0 .. 24	0	Start with Relay (intern)
7015	T1	Breaker Failure		0.00 .. 60.00 sec; ∞	0.15 sec	T1, Delay of 1st stage (local trip)
7016	T2	Breaker Failure		0.00 .. 60.00 sec; ∞	0.30 sec	T2, Delay of 2nd stage (busbar trip)
7101	BREAKER FAILURE	Breaker Fail. 2		OFF ON Block relay	OFF	Breaker Failure Protection
7111	START WITH REL.	Breaker Fail. 2		0 .. 8	0	Start with Relay (intern)
7112	START WITH REL.	Breaker Fail. 2		0 .. 24	0	Start with Relay (intern)
7115	T1	Breaker Fail. 2		0.00 .. 60.00 sec; ∞	0.15 sec	T1, Delay of 1st stage (local trip)
7116	T2	Breaker Fail. 2		0.00 .. 60.00 sec; ∞	0.30 sec	T2, Delay of 2nd stage (busbar trip)
7601	POWER CALCUL.	Measurement		with V setting with V measur.	with V setting	Calculation of Power
7611	DMD Interval	Demand meter		15 Min., 1 Sub 15 Min., 3 Subs 15 Min.,15 Subs 30 Min., 1 Sub 60 Min., 1 Sub 60 Min.,10 Subs 5 Min., 5 Subs	60 Min., 1 Sub	Demand Calculation Intervals
7612	DMD Sync.Time	Demand meter		On The Hour 15 After Hour 30 After Hour 45 After Hour	On The Hour	Demand Synchronization Time
7621	MinMax cycRESET	Min/Max meter		NO YES	YES	Automatic Cyclic Reset Function

Addr.	Parameter	Function	C	Setting Options	Default Setting	Comments
7622	MiMa RESET TIME	Min/Max meter		0 .. 1439 min	0 min	MinMax Reset Timer
7623	MiMa RESETCYCLE	Min/Max meter		1 .. 365 Days	7 Days	MinMax Reset Cycle Period
7624	MinMaxRES.START	Min/Max meter		1 .. 365 Days	1 Days	MinMax Start Reset Cycle in
8101	BALANCE I	Measurem.Superv		ON OFF	OFF	Current Balance Supervision
8102	BALANCE U	Measurem.Superv		ON OFF	OFF	Voltage Balance Supervision
8104	SUMMATION U	Measurem.Superv		ON OFF	OFF	Voltage Summation Supervision
8105	PHASE ROTAT. I	Measurem.Superv		ON OFF	OFF	Current Phase Rotation Supervision
8106	PHASE ROTAT. U	Measurem.Superv		ON OFF	OFF	Voltage Phase Rotation Supervision
8111	BAL. I LIMIT M1	Measurem.Superv	1A	0.10 .. 1.00 A	0.50 A	Current Balance Monitor Meas. Loc. 1
			5A	0.50 .. 5.00 A	2.50 A	
8112	BAL. FACT. I M1	Measurem.Superv		0.10 .. 0.90	0.50	Bal. Factor for Curr. Monitor Meas.Loc.1
8113A	T Sym. I th. M1	Measurem.Superv		5 .. 100 sec	5 sec	Symmetry Iph: Pick-up delay
8121	BAL. I LIMIT M2	Measurem.Superv	1A	0.10 .. 1.00 A	0.50 A	Current Balance Monitor Meas. Loc. 2
			5A	0.50 .. 5.00 A	2.50 A	
8122	BAL. FACT. I M2	Measurem.Superv		0.10 .. 0.90	0.50	Bal. Factor for Curr. Monitor Meas.Loc.2
8123A	T Sym. I th. M2	Measurem.Superv		5 .. 100 sec	5 sec	Symmetry Iph: Pick-up delay
8131	BAL. I LIMIT M3	Measurem.Superv	1A	0.10 .. 1.00 A	0.50 A	Current Balance Monitor Meas. Loc. 3
			5A	0.50 .. 5.00 A	2.50 A	
8132	BAL. FACT. I M3	Measurem.Superv		0.10 .. 0.90	0.50	Bal. Factor for Curr. Monitor Meas.Loc.3
8133A	T Sym. I th. M3	Measurem.Superv		5 .. 100 sec	5 sec	Symmetry Iph: Pick-up delay
8141	BAL. I LIMIT M4	Measurem.Superv	1A	0.10 .. 1.00 A	0.50 A	Current Balance Monitor Meas. Loc. 4
			5A	0.50 .. 5.00 A	2.50 A	
8142	BAL. FACT. I M4	Measurem.Superv		0.10 .. 0.90	0.50	Bal. Factor for Curr. Monitor Meas.Loc.4
8143A	T Sym. I th. M4	Measurem.Superv		5 .. 100 sec	5 sec	Symmetry Iph: Pick-up delay
8151	BAL. I LIMIT M5	Measurem.Superv	1A	0.10 .. 1.00 A	0.50 A	Current Balance Monitor Meas. Loc. 5
			5A	0.50 .. 5.00 A	2.50 A	
8152	BAL. FACT. I M5	Measurem.Superv		0.10 .. 0.90	0.50	Bal. Factor for Curr. Monitor Meas.Loc.5
8153A	T Sym. I th. M5	Measurem.Superv		5 .. 100 sec	5 sec	Symmetry Iph: Pick-up delay
8161	BALANCE U-LIMIT	Measurem.Superv		10 .. 100 V	50 V	Voltage Threshold for Balance Monitoring
8162	BAL. FACTOR U	Measurem.Superv		0.58 .. 0.90	0.75	Balance Factor for Voltage Monitor
8163A	T BAL. U LIMIT	Measurem.Superv		5 .. 100 sec	5 sec	T Balance Factor for Voltage Monitor
8201	TRIP Cir. SUP.	TripCirc.Superv		ON OFF	OFF	TRIP Circuit Supervision
8401	BROKEN WIRE	Supervision		OFF ON	OFF	Fast broken current-wire supervision
8403	FUSE FAIL MON.	Supervision		OFF ON	OFF	Fuse Failure Monitor
8422A	FFM I< M1	Supervision	1A	0.04 .. 2.00 A	0.10 A	I< for FFM detection M1
			5A	0.20 .. 10.00 A	0.50 A	
8423A	FFM I< M2	Supervision	1A	0.04 .. 2.00 A	0.10 A	I< for FFM detection M2
			5A	0.20 .. 10.00 A	0.50 A	
8424A	FFM I< M3	Supervision	1A	0.04 .. 2.00 A	0.10 A	I< for FFM detection M3
			5A	0.20 .. 10.00 A	0.50 A	
8426A	FFM U<max (3ph)	Supervision		2 .. 100 V	5 V	Maximum Voltage Threshold U< (3phase)
8601	EXTERN TRIP 1	External Trips		OFF ON Block relay	OFF	External Trip Function 1

Addr.	Parameter	Function	C	Setting Options	Default Setting	Comments
8602	T DELAY	External Trips		0.00 .. 60.00 sec; ∞	1.00 sec	Ext. Trip 1 Time Delay
8701	EXTERN TRIP 2	External Trips		OFF ON Block relay	OFF	External Trip Function 2
8702	T DELAY	External Trips		0.00 .. 60.00 sec; ∞	1.00 sec	Ext. Trip 2 Time Delay
9011A	RTD 1 TYPE	RTD-Box		Not connected Pt 100 Ω Ni 120 Ω Ni 100 Ω	Pt 100 Ω	RTD 1: Type
9012A	RTD 1 LOCATION	RTD-Box		Oil Ambient Winding Bearing Other	Oil	RTD 1: Location
9013	RTD 1 STAGE 1	RTD-Box		-50 .. 250 °C; ∞	100 °C	RTD 1: Temperature Stage 1 Pickup
9014	RTD 1 STAGE 1	RTD-Box		-58 .. 482 °F; ∞	212 °F	RTD 1: Temperature Stage 1 Pickup
9015	RTD 1 STAGE 2	RTD-Box		-50 .. 250 °C; ∞	120 °C	RTD 1: Temperature Stage 2 Pickup
9016	RTD 1 STAGE 2	RTD-Box		-58 .. 482 °F; ∞	248 °F	RTD 1: Temperature Stage 2 Pickup
9021A	RTD 2 TYPE	RTD-Box		Not connected Pt 100 Ω Ni 120 Ω Ni 100 Ω	Not connected	RTD 2: Type
9022A	RTD 2 LOCATION	RTD-Box		Oil Ambient Winding Bearing Other	Other	RTD 2: Location
9023	RTD 2 STAGE 1	RTD-Box		-50 .. 250 °C; ∞	100 °C	RTD 2: Temperature Stage 1 Pickup
9024	RTD 2 STAGE 1	RTD-Box		-58 .. 482 °F; ∞	212 °F	RTD 2: Temperature Stage 1 Pickup
9025	RTD 2 STAGE 2	RTD-Box		-50 .. 250 °C; ∞	120 °C	RTD 2: Temperature Stage 2 Pickup
9026	RTD 2 STAGE 2	RTD-Box		-58 .. 482 °F; ∞	248 °F	RTD 2: Temperature Stage 2 Pickup
9031A	RTD 3 TYPE	RTD-Box		Not connected Pt 100 Ω Ni 120 Ω Ni 100 Ω	Not connected	RTD 3: Type
9032A	RTD 3 LOCATION	RTD-Box		Oil Ambient Winding Bearing Other	Other	RTD 3: Location
9033	RTD 3 STAGE 1	RTD-Box		-50 .. 250 °C; ∞	100 °C	RTD 3: Temperature Stage 1 Pickup
9034	RTD 3 STAGE 1	RTD-Box		-58 .. 482 °F; ∞	212 °F	RTD 3: Temperature Stage 1 Pickup
9035	RTD 3 STAGE 2	RTD-Box		-50 .. 250 °C; ∞	120 °C	RTD 3: Temperature Stage 2 Pickup
9036	RTD 3 STAGE 2	RTD-Box		-58 .. 482 °F; ∞	248 °F	RTD 3: Temperature Stage 2 Pickup
9041A	RTD 4 TYPE	RTD-Box		Not connected Pt 100 Ω Ni 120 Ω Ni 100 Ω	Not connected	RTD 4: Type
9042A	RTD 4 LOCATION	RTD-Box		Oil Ambient Winding Bearing Other	Other	RTD 4: Location
9043	RTD 4 STAGE 1	RTD-Box		-50 .. 250 °C; ∞	100 °C	RTD 4: Temperature Stage 1 Pickup
9044	RTD 4 STAGE 1	RTD-Box		-58 .. 482 °F; ∞	212 °F	RTD 4: Temperature Stage 1 Pickup

Addr.	Parameter	Function	C	Setting Options	Default Setting	Comments
9045	RTD 4 STAGE 2	RTD-Box		-50 .. 250 °C; ∞	120 °C	RTD 4: Temperature Stage 2 Pickup
9046	RTD 4 STAGE 2	RTD-Box		-58 .. 482 °F; ∞	248 °F	RTD 4: Temperature Stage 2 Pickup
9051A	RTD 5 TYPE	RTD-Box		Not connected Pt 100 Ω Ni 120 Ω Ni 100 Ω	Not connected	RTD 5: Type
9052A	RTD 5 LOCATION	RTD-Box		Oil Ambient Winding Bearing Other	Other	RTD 5: Location
9053	RTD 5 STAGE 1	RTD-Box		-50 .. 250 °C; ∞	100 °C	RTD 5: Temperature Stage 1 Pickup
9054	RTD 5 STAGE 1	RTD-Box		-58 .. 482 °F; ∞	212 °F	RTD 5: Temperature Stage 1 Pickup
9055	RTD 5 STAGE 2	RTD-Box		-50 .. 250 °C; ∞	120 °C	RTD 5: Temperature Stage 2 Pickup
9056	RTD 5 STAGE 2	RTD-Box		-58 .. 482 °F; ∞	248 °F	RTD 5: Temperature Stage 2 Pickup
9061A	RTD 6 TYPE	RTD-Box		Not connected Pt 100 Ω Ni 120 Ω Ni 100 Ω	Not connected	RTD 6: Type
9062A	RTD 6 LOCATION	RTD-Box		Oil Ambient Winding Bearing Other	Other	RTD 6: Location
9063	RTD 6 STAGE 1	RTD-Box		-50 .. 250 °C; ∞	100 °C	RTD 6: Temperature Stage 1 Pickup
9064	RTD 6 STAGE 1	RTD-Box		-58 .. 482 °F; ∞	212 °F	RTD 6: Temperature Stage 1 Pickup
9065	RTD 6 STAGE 2	RTD-Box		-50 .. 250 °C; ∞	120 °C	RTD 6: Temperature Stage 2 Pickup
9066	RTD 6 STAGE 2	RTD-Box		-58 .. 482 °F; ∞	248 °F	RTD 6: Temperature Stage 2 Pickup
9071A	RTD 7 TYPE	RTD-Box		Not connected Pt 100 Ω Ni 120 Ω Ni 100 Ω	Not connected	RTD 7: Type
9072A	RTD 7 LOCATION	RTD-Box		Oil Ambient Winding Bearing Other	Other	RTD 7: Location
9073	RTD 7 STAGE 1	RTD-Box		-50 .. 250 °C; ∞	100 °C	RTD 7: Temperature Stage 1 Pickup
9074	RTD 7 STAGE 1	RTD-Box		-58 .. 482 °F; ∞	212 °F	RTD 7: Temperature Stage 1 Pickup
9075	RTD 7 STAGE 2	RTD-Box		-50 .. 250 °C; ∞	120 °C	RTD 7: Temperature Stage 2 Pickup
9076	RTD 7 STAGE 2	RTD-Box		-58 .. 482 °F; ∞	248 °F	RTD 7: Temperature Stage 2 Pickup
9081A	RTD 8 TYPE	RTD-Box		Not connected Pt 100 Ω Ni 120 Ω Ni 100 Ω	Not connected	RTD 8: Type
9082A	RTD 8 LOCATION	RTD-Box		Oil Ambient Winding Bearing Other	Other	RTD 8: Location
9083	RTD 8 STAGE 1	RTD-Box		-50 .. 250 °C; ∞	100 °C	RTD 8: Temperature Stage 1 Pickup
9084	RTD 8 STAGE 1	RTD-Box		-58 .. 482 °F; ∞	212 °F	RTD 8: Temperature Stage 1 Pickup

Addr.	Parameter	Function	C	Setting Options	Default Setting	Comments
9085	RTD 8 STAGE 2	RTD-Box		-50 .. 250 °C; ∞	120 °C	RTD 8: Temperature Stage 2 Pickup
9086	RTD 8 STAGE 2	RTD-Box		-58 .. 482 °F; ∞	248 °F	RTD 8: Temperature Stage 2 Pickup
9091A	RTD 9 TYPE	RTD-Box		Not connected Pt 100 Ω Ni 120 Ω Ni 100 Ω	Not connected	RTD 9: Type
9092A	RTD 9 LOCATION	RTD-Box		Oil Ambient Winding Bearing Other	Other	RTD 9: Location
9093	RTD 9 STAGE 1	RTD-Box		-50 .. 250 °C; ∞	100 °C	RTD 9: Temperature Stage 1 Pickup
9094	RTD 9 STAGE 1	RTD-Box		-58 .. 482 °F; ∞	212 °F	RTD 9: Temperature Stage 1 Pickup
9095	RTD 9 STAGE 2	RTD-Box		-50 .. 250 °C; ∞	120 °C	RTD 9: Temperature Stage 2 Pickup
9096	RTD 9 STAGE 2	RTD-Box		-58 .. 482 °F; ∞	248 °F	RTD 9: Temperature Stage 2 Pickup
9101A	RTD10 TYPE	RTD-Box		Not connected Pt 100 Ω Ni 120 Ω Ni 100 Ω	Not connected	RTD10: Type
9102A	RTD10 LOCATION	RTD-Box		Oil Ambient Winding Bearing Other	Other	RTD10: Location
9103	RTD10 STAGE 1	RTD-Box		-50 .. 250 °C; ∞	100 °C	RTD10: Temperature Stage 1 Pickup
9104	RTD10 STAGE 1	RTD-Box		-58 .. 482 °F; ∞	212 °F	RTD10: Temperature Stage 1 Pickup
9105	RTD10 STAGE 2	RTD-Box		-50 .. 250 °C; ∞	120 °C	RTD10: Temperature Stage 2 Pickup
9106	RTD10 STAGE 2	RTD-Box		-58 .. 482 °F; ∞	248 °F	RTD10: Temperature Stage 2 Pickup
9111A	RTD11 TYPE	RTD-Box		Not connected Pt 100 Ω Ni 120 Ω Ni 100 Ω	Not connected	RTD11: Type
9112A	RTD11 LOCATION	RTD-Box		Oil Ambient Winding Bearing Other	Other	RTD11: Location
9113	RTD11 STAGE 1	RTD-Box		-50 .. 250 °C; ∞	100 °C	RTD11: Temperature Stage 1 Pickup
9114	RTD11 STAGE 1	RTD-Box		-58 .. 482 °F; ∞	212 °F	RTD11: Temperature Stage 1 Pickup
9115	RTD11 STAGE 2	RTD-Box		-50 .. 250 °C; ∞	120 °C	RTD11: Temperature Stage 2 Pickup
9116	RTD11 STAGE 2	RTD-Box		-58 .. 482 °F; ∞	248 °F	RTD11: Temperature Stage 2 Pickup
9121A	RTD12 TYPE	RTD-Box		Not connected Pt 100 Ω Ni 120 Ω Ni 100 Ω	Not connected	RTD12: Type
9122A	RTD12 LOCATION	RTD-Box		Oil Ambient Winding Bearing Other	Other	RTD12: Location
9123	RTD12 STAGE 1	RTD-Box		-50 .. 250 °C; ∞	100 °C	RTD12: Temperature Stage 1 Pickup
9124	RTD12 STAGE 1	RTD-Box		-58 .. 482 °F; ∞	212 °F	RTD12: Temperature Stage 1 Pickup

Addr.	Parameter	Function	C	Setting Options	Default Setting	Comments
9125	RTD12 STAGE 2	RTD-Box		-50 .. 250 °C; ∞	120 °C	RTD12: Temperature Stage 2 Pickup
9126	RTD12 STAGE 2	RTD-Box		-58 .. 482 °F; ∞	248 °F	RTD12: Temperature Stage 2 Pickup

A.9 Information List

Indications for IEC 60 870-5-103 are always reported ON / OFF if they are subject to general interrogation for IEC 60 870-5-103. If not, they are reported only as ON.

New user-defined indications or such newly allocated to IEC 60 870-5-103 are set to ON / OFF and subjected to general interrogation if the information type is not a spontaneous event („.._Ev“). Further information on messages can be found in detail in the SIPROTEC® 4 System Description, Order No. E50417-H1100-C151.

In columns „Event Log“, „Trip Log“ and „Ground Fault Log“ the following applies:

UPPER CASE NOTATION “ON/OFF”: definitely set, not allocatable

lower case notation “on/off”: preset, allocatable

*: not preset, allocatable

<blank>: neither preset nor allocatable

In column „Marked in Oscill.Record“ the following applies:

UPPER CASE NOTATION “M”: definitely set, not allocatable

lower case notation “m”: preset, allocatable

*: not preset, allocatable

<blank>: neither preset nor allocatable

No.	Description	Function	Type of Information	Log Buffers				Configurable in Matrix					IEC 60870-5-103			
				Event Log ON/OFF	Trip (Fault) Log On/Off	Ground Fault Log ON/OFF	Marked in Oscill. Record	LED	Binary Input	Function Key	Relay	Chatter Suppression	Type	Information Number	Data Unit	General Interrogation
-	Reset LED (Reset LED)	Device	IntSP	ON	*		*	LED			BO		176	19	1	No
-	Test mode (Test mode)	Device	IntSP	ON OFF	*		*	LED			BO		176	21	1	Yes
-	Stop data transmission (DataStop)	Device	IntSP	ON OFF	*		*	LED			BO		176	20	1	Yes
-	Unlock data transmission via BI (UnlockDT)	Device	IntSP	*	*		*	LED			BO					
-	>Back Light on (>Light on)	Device	SP	ON OFF	*		*	LED	BI		BO					
-	Clock Synchronization (SynchClock)	Device	IntSP_Ev	*	*		*	LED			BO					
-	Hardware Test Mode (HWTestMod)	Device	IntSP	ON OFF	*		*	LED			BO					
-	Group A (Group A)	Change Group	IntSP	ON OFF	*		*	LED			BO		176	23	1	Yes
-	Group B (Group B)	Change Group	IntSP	ON OFF	*		*	LED			BO		176	24	1	Yes
-	Group C (Group C)	Change Group	IntSP	ON OFF	*		*	LED			BO		176	25	1	Yes
-	Group D (Group D)	Change Group	IntSP	ON OFF	*		*	LED			BO		176	26	1	Yes
-	Fault Recording Start (FltRecSta)	Osc. Fault Rec.	IntSP	ON OFF	*		m	LED			BO					
-	>Quitt Lock Out: General Trip (>QuitG-TRP)	P.System Data 2	IntSP	*	*		*	LED	BI	FCTN	BO					

No.	Description	Function	Type of Information	Log Buffers				Configurable in Matrix					IEC 60870-5-103			
				Event Log ON/OFF	Trip (Fault) Log On/Off	Ground Fault Log ON/OFF	Marked in Oscill. Record	LED	Binary Input	Function Key	Relay	Chatter Suppression	Type	Information Number	Data Unit	General Interrogation
-	Lock Out: General TRIP (G-TRP Quit)	P.System Data 2	IntSP	*	*		*	LED			BO					
-	Error Systeminterface (SysIntErr.)	Supervision	IntSP	ON OFF	*		*	LED			BO					
-	Error FMS FO 1 (Error FMS1)	Supervision	OUT	ON OFF	*		*	LED			BO					
-	Error FMS FO 2 (Error FMS2)	Supervision	OUT	ON OFF	*		*	LED			BO					
-	Disturbance CFC (Distur.CFC)	Supervision	OUT	ON OFF	*		*	LED			BO					
-	Control Authority (Cntrl Auth)	Cntrl Authority	IntSP	ON OFF	*			LED								
-	Control Authority (Cntrl Auth)	Cntrl Authority	DP	ON OFF	*			LED					101	85	1	Yes
-	Controlmode REMOTE (ModeREMOTE)	Cntrl Authority	IntSP	ON OFF	*			LED								
-	Controlmode LOCAL (ModeLOCAL)	Cntrl Authority	IntSP	ON OFF	*			LED								
-	Controlmode LOCAL (ModeLOCAL)	Cntrl Authority	DP	ON OFF	*			LED					101	86	1	Yes
-	circuit breaker Q0 (Q0)	Control Device	CF_D12	on off							BO					
-	circuit breaker Q0 (Q0)	Control Device	DP	on off	*		*		BI			CB				
-	Reset Minimum and Maximum counter (ResMinMax)	Min/Max meter	IntSP_Ev	ON												
-	Threshold Value 1 (ThreshVal1)	Thresh.-Switch	IntSP	ON OFF	*		*	LED		FCTN	BO	CB				
-	Reset meter (Meter res)	Energy	IntSP_Ev	ON	*				BI							
1	No Function configured (Not configured)	Device	SP													
2	Function Not Available (Non Existent)	Device	SP													
3	>Synchronize Internal Real Time Clock (>Time Synch)	Device	SP_Ev	*	*		*	LED	BI		BO		135	48	1	No
4	>Trigger Waveform Capture (>Trig.Wave.Cap.)	Osc. Fault Rec.	SP	*	*		m	LED	BI		BO		135	49	1	Yes
5	>Reset LED (>Reset LED)	Device	SP	*	*		*	LED	BI		BO		135	50	1	Yes
7	>Setting Group Select Bit 0 (>Set Group Bit0)	Change Group	SP	*	*		*	LED	BI		BO		135	51	1	Yes
8	>Setting Group Select Bit 1 (>Set Group Bit1)	Change Group	SP	*	*		*	LED	BI		BO		135	52	1	Yes
009.0100	Failure EN100 Modul (Failure Modul)	EN100-Modul 1	IntSP	ON OFF			*	LED			BO					
009.0101	Failure EN100 Link Channel 1 (Ch1) (Fail Ch1)	EN100-Modul 1	IntSP	ON OFF			*	LED			BO					
009.0102	Failure EN100 Link Channel 2 (Ch2) (Fail Ch2)	EN100-Modul 1	IntSP	ON OFF			*	LED			BO					
15	>Test mode (>Test mode)	Device	SP	*	*		*	LED	BI		BO		135	53	1	Yes
16	>Stop data transmission (>DataStop)	Device	SP	*	*		*	LED	BI		BO		135	54	1	Yes
022.2421	Time Overcurrent picked up (Overcurrent PU)	General O/C	OUT	*	ON OFF		*	LED			BO		60	69	2	Yes
022.2451	Time Overcurrent TRIP (OvercurrentTRIP)	General O/C	OUT	*	ON		m	LED			BO		60	68	2	Yes

No.	Description	Function	Type of Information	Log Buffers				Configurable in Matrix					IEC 60870-5-103			
				Event Log ON/OFF	Trip (Fault) Log On/Off	Ground Fault Log ON/OFF	Marked in Oscill. Record	LED	Binary Input	Function Key	Relay	Chatter Suppression	Type	Information Number	Data Unit	General Interrogation
023.2404	>BLOCK Phase time overcurrent (>BLK Phase O/C)	Phase O/C	SP	*	*		*	LED	BI		BO					
023.2411	Time Overcurrent Phase is OFF (O/C Phase OFF)	Phase O/C	OUT	ON OFF	*		*	LED			BO		60	21	1	Yes
023.2412	Time Overcurrent Phase is BLOCKED (O/C Phase BLK)	Phase O/C	OUT	ON OFF	ON OFF		*	LED			BO		60	22	1	Yes
023.2413	Time Overcurrent Phase is ACTIVE (O/C Phase ACT)	Phase O/C	OUT	ON OFF	*		*	LED			BO		60	23	1	Yes
023.2422	Time Overcurrent Phase L1 picked up (O/C Ph L1 PU)	Phase O/C	OUT	*	ON OFF		m	LED			BO		60	112	2	Yes
023.2423	Time Overcurrent Phase L2 picked up (O/C Ph L2 PU)	Phase O/C	OUT	*	ON OFF		m	LED			BO		60	113	2	Yes
023.2424	Time Overcurrent Phase L3 picked up (O/C Ph L3 PU)	Phase O/C	OUT	*	ON OFF		m	LED			BO		60	114	2	Yes
023.2491	O/C Phase: Not available for this object (O/C Ph. Not av.)	Phase O/C	OUT	ON	*		*	LED			BO					
023.2501	>BLOCK time overcurrent Phase InRush (>BLK Ph.O/C Inr)	Phase O/C	SP	ON OFF	ON OFF		*	LED	BI		BO		60	98	1	Yes
023.2502	>BLOCK I>> (>BLOCK I>>)	Phase O/C	SP	*	*		*	LED	BI		BO		60	1	1	Yes
023.2503	>BLOCK I> (>BLOCK I>)	Phase O/C	SP	*	*		*	LED	BI		BO		60	2	1	Yes
023.2504	>BLOCK Ip (>BLOCK Ip)	Phase O/C	SP	*	*		*	LED	BI		BO		60	3	1	Yes
023.2514	I>> BLOCKED (I>> BLOCKED)	Phase O/C	OUT	ON OFF	ON OFF		*	LED			BO		60	106	1	Yes
023.2515	I> BLOCKED (I> BLOCKED)	Phase O/C	OUT	ON OFF	ON OFF		*	LED			BO		60	105	1	Yes
023.2516	Ip BLOCKED (Ip BLOCKED)	Phase O/C	OUT	ON OFF	ON OFF		*	LED			BO		60	109	1	Yes
023.2521	I>> picked up (I>> picked up)	Phase O/C	OUT	*	ON OFF		*	LED			BO		60	75	2	Yes
023.2522	I> picked up (I> picked up)	Phase O/C	OUT	*	ON OFF		*	LED			BO		60	76	2	Yes
023.2523	Ip picked up (Ip picked up)	Phase O/C	OUT	*	ON OFF		*	LED			BO		60	77	2	Yes
023.2524	I> InRush picked up (I> InRush PU)	Phase O/C	OUT	*	ON OFF		*	LED			BO		60	80	2	Yes
023.2525	Ip InRush picked up (Ip InRush PU)	Phase O/C	OUT	*	ON OFF		*	LED			BO		60	82	2	Yes
023.2526	Phase L1 InRush picked up (L1 InRush PU)	Phase O/C	OUT	*	ON OFF		*	LED			BO		60	89	2	Yes
023.2527	Phase L2 InRush picked up (L2 InRush PU)	Phase O/C	OUT	*	ON OFF		*	LED			BO		60	90	2	Yes
023.2528	Phase L3 InRush picked up (L3 InRush PU)	Phase O/C	OUT	*	ON OFF		*	LED			BO		60	91	2	Yes
023.2531	Phase L1 InRush detected (L1 InRush det.)	Phase O/C	OUT	*	ON OFF		*	LED			BO					
023.2532	Phase L2 InRush detected (L2 InRush det.)	Phase O/C	OUT	*	ON OFF		*	LED			BO					
023.2533	Phase L3 InRush detected (L3 InRush det.)	Phase O/C	OUT	*	ON OFF		*	LED			BO					
023.2534	Cross blk: PhX blocked PhY (INRUSH X-BLK)	Phase O/C	OUT	*	ON OFF		*	LED			BO					
023.2541	I>> Time Out (I>> Time Out)	Phase O/C	OUT	*	*		*	LED			BO		60	49	2	Yes
023.2542	I> Time Out (I> Time Out)	Phase O/C	OUT	*	*		*	LED			BO		60	53	2	Yes
023.2543	Ip Time Out (Ip Time Out)	Phase O/C	OUT	*	*		*	LED			BO		60	57	2	Yes
023.2551	I>> TRIP (I>> TRIP)	Phase O/C	OUT	*	ON		*	LED			BO		60	70	2	Yes

No.	Description	Function	Type of Information	Log Buffers				Configurable in Matrix					IEC 60870-5-103			
				Event Log ON/OFF	Trip (Fault) Log On/Off	Ground Fault Log ON/OFF	Marked in Oscill. Record	LED	Binary Input	Function Key	Relay	Chatter Suppression	Type	Information Number	Data Unit	General Interrogation
023.2552	I> TRIP (I> TRIP)	Phase O/C	OUT	*	ON		*	LED			BO		60	71	2	Yes
023.2553	Ip TRIP (Ip TRIP)	Phase O/C	OUT	*	ON		*	LED			BO		60	58	2	Yes
024.2404	>BLOCK Earth time overcurrent (>BLK Earth O/C)	Earth O/C	SP	*	*		*	LED	BI		BO					
024.2411	Time Overcurrent Earth is OFF (O/C Earth OFF)	Earth O/C	OUT	ON OFF	*		*	LED			BO		60	26	1	Yes
024.2412	Time Overcurrent Earth is BLOCKED (O/C Earth BLK)	Earth O/C	OUT	ON OFF	ON OFF		*	LED			BO		60	27	1	Yes
024.2413	Time Overcurrent Earth is ACTIVE (O/C Earth ACT)	Earth O/C	OUT	ON OFF	*		*	LED			BO		60	28	1	Yes
024.2425	Time Overcurrent Earth picked up (O/C Earth PU)	Earth O/C	OUT	*	ON OFF		m	LED			BO		60	67	2	Yes
024.2492	O/C Earth err.: No auxiliary CT assigned (O/C Earth ErrCT)	Earth O/C	OUT	ON	*		*	LED			BO					
024.2501	>BLOCK time overcurrent Earth InRush (>BLK E O/C Inr)	Earth O/C	SP	ON OFF	ON OFF		*	LED	BI		BO		60	100	1	Yes
024.2502	>BLOCK IE>> (>BLOCK IE>>)	Earth O/C	SP	*	*		*	LED	BI		BO		60	4	1	Yes
024.2503	>BLOCK IE> (>BLOCK IE>)	Earth O/C	SP	*	*		*	LED	BI		BO		60	5	1	Yes
024.2504	>BLOCK IEp (>BLOCK IEp)	Earth O/C	SP	*	*		*	LED	BI		BO		60	6	1	Yes
024.2514	IE>> BLOCKED (IE>> BLOCKED)	Earth O/C	OUT	ON OFF	ON OFF		*	LED			BO		60	108	1	Yes
024.2515	IE> BLOCKED (IE> BLOCKED)	Earth O/C	OUT	ON OFF	ON OFF		*	LED			BO		60	107	1	Yes
024.2516	IEp BLOCKED (IEp BLOCKED)	Earth O/C	OUT	ON OFF	ON OFF		*	LED			BO		60	110	1	Yes
024.2521	IE>> picked up (IE>> picked up)	Earth O/C	OUT	*	ON OFF		*	LED			BO		60	59	2	Yes
024.2522	IE> picked up (IE> picked up)	Earth O/C	OUT	*	ON OFF		*	LED			BO		60	62	2	Yes
024.2523	IEp picked up (IEp picked up)	Earth O/C	OUT	*	ON OFF		*	LED			BO		60	64	2	Yes
024.2524	IE> InRush picked up (IE> InRush PU)	Earth O/C	OUT	*	ON OFF		*	LED			BO		60	81	2	Yes
024.2525	IEp InRush picked up (IEp InRush PU)	Earth O/C	OUT	*	ON OFF		*	LED			BO		60	83	2	Yes
024.2529	Earth InRush picked up (Earth InRush PU)	Earth O/C	OUT	*	ON OFF		*	LED			BO		60	88	2	Yes
024.2541	IE>> Time Out (IE>> Time Out)	Earth O/C	OUT	*	*		*	LED			BO		60	60	2	Yes
024.2542	IE> Time Out (IE> Time Out)	Earth O/C	OUT	*	*		*	LED			BO		60	63	2	Yes
024.2543	IEp Time Out (IEp TimeOut)	Earth O/C	OUT	*	*		*	LED			BO		60	65	2	Yes
024.2551	IE>> TRIP (IE>> TRIP)	Earth O/C	OUT	*	ON		*	LED			BO		60	61	2	Yes
024.2552	IE> TRIP (IE> TRIP)	Earth O/C	OUT	*	ON		*	LED			BO		60	72	2	Yes
024.2553	IEp TRIP (IEp TRIP)	Earth O/C	OUT	*	ON		*	LED			BO		60	66	2	Yes
025.2413	Dynamic settings O/C Phase are ACTIVE (I Dyn.set. ACT)	ColdLoadPickup	OUT	ON OFF	ON OFF		*	LED			BO		60	248	1	Yes
026.2413	Dynamic settings O/C Earth are ACTIVE (IE Dyn.set. ACT)	ColdLoadPickup	OUT	ON OFF	ON OFF		*	LED			BO		60	250	1	Yes
033.2404	>BLOCK undervoltage protection (>BLOCK U/V)	Undervoltage	SP	*	*		*	LED	BI		BO					
033.2411	Undervoltage protection is switched OFF (Undervolt. OFF)	Undervoltage	OUT	ON OFF	*		*	LED			BO		74	30	1	Yes
033.2412	Undervoltage protection is BLOCKED (Undervolt. BLK)	Undervoltage	OUT	ON OFF	ON OFF		*	LED			BO		74	31	1	Yes

No.	Description	Function	Type of Information	Log Buffers				Configurable in Matrix					IEC 60870-5-103			
				Event Log ON/OFF	Trip (Fault) Log On/Off	Ground Fault Log ON/OFF	Marked in Oscill. Record	LED	Binary Input	Function Key	Relay	Chatter Suppression	Type	Information Number	Data Unit	General Interrogation
033.2413	Undervoltage protection is ACTIVE (Undervolt. ACT)	Undervoltage	OUT	ON OFF	ON OFF		*	LED			BO		74	32	1	Yes
033.2491	Undervoltage: Not avail. for this obj. (U< err. Obj.)	Undervoltage	OUT	ON	*		*	LED			BO					
033.2492	Undervoltage: error assigned VT (U< err. VT)	Undervoltage	OUT	ON	*		*	LED			BO					
033.2502	>BLOCK undervoltage protection U<< (>BLOCK U<<)	Undervoltage	SP	ON OFF	ON OFF		*	LED	BI		BO		74	8	1	Yes
033.2503	>BLOCK undervoltage protection U< (>BLOCK U<)	Undervoltage	SP	ON OFF	ON OFF		*	LED	BI		BO		74	6	1	Yes
033.2521	Undervoltage U<< picked up (U<< picked up)	Undervoltage	OUT	*	ON OFF		*	LED			BO		74	37	2	Yes
033.2522	Undervoltage U< picked up (U< picked up)	Undervoltage	OUT	*	ON OFF		*	LED			BO		74	33	2	Yes
033.2551	Undervoltage U<< TRIP (U<< TRIP)	Undervoltage	OUT	*	ON		*	LED			BO		74	40	2	Yes
033.2552	Undervoltage U< TRIP (U< TRIP)	Undervoltage	OUT	*	ON		*	LED			BO		74	39	2	Yes
034.2404	>BLOCK overvoltage protection (>BLOCK O/V)	Overvoltage	SP	*	*		*	LED	BI		BO					
034.2411	Overvoltage protection is switched OFF (Overvolt. OFF)	Overvoltage	OUT	ON OFF	*		*	LED			BO		74	65	1	Yes
034.2412	Overvoltage protection is BLOCKED (Overvolt. BLK)	Overvoltage	OUT	ON OFF	ON OFF		*	LED			BO		74	66	1	Yes
034.2413	Overvoltage protection is ACTIVE (Overvolt. ACT)	Overvoltage	OUT	ON OFF	ON OFF		*	LED			BO		74	67	1	Yes
034.2491	Overvoltage: Not avail. for this obj. (U> err. Obj.)	Overvoltage	OUT	ON	*		*	LED			BO					
034.2492	Overvoltage: error VT assign-ment (U> err. VT)	Overvoltage	OUT	ON	*		*	LED			BO					
034.2502	>BLOCK overvoltage protection U>> (>BLOCK U>>)	Overvoltage	SP	ON OFF	ON OFF		*	LED	BI		BO		74	21	1	Yes
034.2503	>BLOCK overvoltage protection U> (>BLOCK U>)	Overvoltage	SP	ON OFF	ON OFF		*	LED	BI		BO		74	20	1	Yes
034.2521	Overvoltage U>> picked up (U>> picked up)	Overvoltage	OUT	*	ON OFF		*	LED			BO		74	71	2	Yes
034.2522	Overvoltage U> picked up (U> picked up)	Overvoltage	OUT	*	ON OFF		*	LED			BO		74	68	2	Yes
034.2551	Overvoltage U>> TRIP (U>> TRIP)	Overvoltage	OUT	*	ON		*	LED			BO		74	73	2	Yes
034.2552	Overvoltage U> TRIP (U> TRIP)	Overvoltage	OUT	*	ON		*	LED			BO		74	70	2	Yes
044.2404	>BLOCK Thermal Overload Pro-tection (>BLK ThOverload)	Therm. Overload	SP	*	*		*	LED	BI		BO		167	3	1	Yes
044.2411	Thermal Overload Protection OFF (Th.Overload OFF)	Therm. Overload	OUT	ON OFF	*		*	LED			BO		167	11	1	Yes
044.2412	Thermal Overload Protection BLOCKED (Th.Overload BLK)	Therm. Overload	OUT	ON OFF	ON OFF		*	LED			BO		167	12	1	Yes
044.2413	Thermal Overload Protection ACTIVE (Th.Overload ACT)	Therm. Overload	OUT	ON OFF	*		*	LED			BO		167	13	1	Yes
044.2421	Thermal Overload picked up (O/L Th. pick.up)	Therm. Overload	OUT	ON OFF	*		*	LED			BO		167	17	1	Yes
044.2451	Thermal Overload TRIP (ThOver-load TRIP)	Therm. Overload	OUT	*	ON OFF		m	LED			BO		167	21	2	Yes
044.2491	Th. Overload Not available for this obj. (O/L Not avail.)	Therm. Overload	OUT	ON	*		*	LED			BO					
044.2494	Th. Overload err.:adverse Adap.factor CT (O/L Adap.fact.)	Therm. Overload	OUT	ON	*		*	LED			BO					

No.	Description	Function	Type of Information	Log Buffers				Configurable in Matrix					IEC 60870-5-103			
				Event Log ON/OFF	Trip (Fault) Log On/Off	Ground Fault Log ON/OFF	Marked in Oscill. Record	LED	Binary Input	Function Key	Relay	Chatter Suppression	Type	Information Number	Data Unit	General Interrogation
044.2601	>Emergency start Th. Overload Protection (>Emer.Start O/L)	Therm. Overload	SP	ON OFF	*		*	LED	BI		BO		167	7	1	Yes
044.2602	Th. Overload Current Alarm (I alarm) (O/L I Alarm)	Therm. Overload	OUT	ON OFF	*		*	LED			BO		167	15	1	Yes
044.2603	Thermal Overload Alarm (O/L Θ Alarm)	Therm. Overload	OUT	ON OFF	*		*	LED			BO		167	16	1	Yes
044.2604	Thermal Overload hot spot Th. Alarm (O/L ht.spot Al.)	Therm. Overload	OUT	ON OFF	*		*	LED			BO		167	41	1	Yes
044.2605	Thermal Overload hot spot Th. TRIP (O/L h.spot TRIP)	Therm. Overload	OUT	ON OFF	*		*	LED			BO		167	42	2	Yes
044.2606	Thermal Overload aging rate Alarm (O/L ag.rate Al.)	Therm. Overload	OUT	ON OFF	*		*	LED			BO		167	43	1	Yes
044.2607	Thermal Overload aging rate TRIP (O/L ag.rt. TRIP)	Therm. Overload	OUT	ON OFF	*		*	LED			BO		167	44	1	Yes
044.2609	Th. Overload No temperature measured (O/L No Th.meas.)	Therm. Overload	OUT	ON	*		*	LED			BO					
047.2404	>BLOCK Breaker failure (>BLOCK BkrFail)	Breaker Failure	SP	*	*		*	LED	BI		BO		166	103	1	Yes
047.2411	Breaker failure is switched OFF (BkrFail OFF)	Breaker Failure	OUT	ON OFF	*		*	LED			BO		166	151	1	Yes
047.2412	Breaker failure is BLOCKED (BkrFail BLOCK)	Breaker Failure	OUT	ON OFF	ON OFF		*	LED			BO		166	152	1	Yes
047.2413	Breaker failure is ACTIVE (Bkr-Fail ACTIVE)	Breaker Failure	OUT	ON OFF	*		*	LED			BO		166	153	1	Yes
047.2491	Breaker failure Not avail. for this obj. (BkrFail Not av.)	Breaker Failure	OUT	ON	*		*	LED			BO					
047.2651	>Breaker failure initiated externally (>BrkFail extSRC)	Breaker Failure	SP	ON OFF	*		*	LED	BI		BO		166	104	1	Yes
047.2652	Breaker failure (internal) PICKUP (BkrFail int PU)	Breaker Failure	OUT	*	ON OFF		*	LED			BO		166	156	2	Yes
047.2653	Breaker failure (external) PICKUP (BkrFail ext PU)	Breaker Failure	OUT	*	ON OFF		*	LED			BO		166	157	2	Yes
047.2654	BF TRIP T1 (local trip) (BF T1-TRIP(loc))	Breaker Failure	OUT	*	ON		m	LED			BO		166	192	2	Yes
047.2655	BF TRIP T2 (busbar trip) (BF T2-TRIP(bus))	Breaker Failure	OUT	*	ON		m	LED			BO		166	194	2	Yes
049.2404	>BLOCK Cold-Load-Pickup (>BLOCK CLP)	ColdLoadPickup	SP	*	*		*	LED	BI		BO					
049.2411	Cold-Load-Pickup switched OFF (CLP OFF)	ColdLoadPickup	OUT	ON OFF	*		*	LED			BO		60	244	1	Yes
049.2412	Cold-Load-Pickup is BLOCKED (CLP BLOCKED)	ColdLoadPickup	OUT	ON OFF	ON OFF		*	LED			BO		60	245	1	Yes
049.2413	Cold-Load-Pickup is RUNNING (CLP running)	ColdLoadPickup	OUT	ON OFF	*		*	LED			BO		60	246	1	Yes
049.2505	>BLOCK Cold-Load-Pickup stop timer (>BLK CLP stpTim)	ColdLoadPickup	SP	ON OFF	ON OFF		*	LED	BI		BO		60	243	1	Yes
51	Device is Operational and Protecting (Device OK)	Device	OUT	ON OFF	*		*	LED			BO		135	81	1	Yes
52	At Least 1 Protection Funct. is Active (ProtActive)	Device	IntSP	ON OFF	*		*	LED			BO		176	18	1	Yes
55	Reset Device (Reset Device)	Device	OUT	*	*		*	LED			BO		176	4	5	No
56	Initial Start of Device (Initial Start)	Device	OUT	ON	*		*	LED			BO		176	5	5	No
67	Resume (Resume)	Device	OUT	ON	*		*	LED			BO		135	97	1	No
68	Clock Synchronization Error (Clock SyncError)	Supervision	OUT	ON OFF	*		*	LED			BO					

No.	Description	Function	Type of Information	Log Buffers				Configurable in Matrix					IEC 60870-5-103			
				Event Log ON/OFF	Trip (Fault) Log On/Off	Ground Fault Log ON/OFF	Marked in Oscill. Record	LED	Binary Input	Function Key	Relay	Chatter Suppression	Type	Information Number	Data Unit	General Interrogation
69	Daylight Saving Time (DayLight-SavTime)	Device	OUT	ON OFF	*		*	LED			BO					
70	Setting calculation is running (Settings Calc.)	Device	OUT	ON OFF	*		*	LED			BO		176	22	1	Yes
71	Settings Check (Settings Check)	Device	OUT	*	*		*	LED			BO					
72	Level-2 change (Level-2 change)	Device	OUT	ON OFF	*		*	LED			BO					
73	Local setting change (Local change)	Device	OUT	*	*		*	LED			BO					
109	Frequency out of range (Frequ. o.o.r.)	Device	OUT	ON OFF	*		*	LED			BO					
110	Event lost (Event Lost)	Supervision	OUT_Ev	ON	*		*	LED			BO		135	130	1	No
113	Flag Lost (Flag Lost)	Supervision	OUT	ON	*		M	LED			BO		135	136	1	Yes
125	Chatter ON (Chatter ON)	Device	OUT	ON OFF	*		*	LED			BO		135	145	1	Yes
126	Protection ON/OFF (via system port) (ProtON/OFF)	P.System Data 2	IntSP	ON OFF	*		*	LED			BO					
140	Error with a summary alarm (Error Sum Alarm)	Supervision	OUT	*	*		*	LED			BO		176	47	1	Yes
160	Alarm Summary Event (Alarm Sum Event)	Supervision	OUT	*	*		*	LED			BO		176	46	1	Yes
161	Failure: General Current Supervision (Fail I Superv.)	Measurem.Superv	OUT	ON OFF	*		*	LED			BO					
163	Failure: Current Balance (Fail I balance)	Measurem.Superv	OUT	ON OFF	*		*	LED			BO		135	183	1	Yes
164	Failure: General Voltage Supervision (Fail U Superv.)	Measurem.Superv	OUT	ON OFF	*		*	LED			BO					
165	Failure: Voltage Summation Phase-Earth (Fail Σ U Ph-E)	Measurem.Superv	OUT	ON OFF	*		*	LED			BO		135	184	1	Yes
167	Failure: Voltage Balance (Fail U balance)	Measurem.Superv	OUT	ON OFF	*		*	LED			BO		135	186	1	Yes
169	VT Fuse Failure (alarm >10s) (VT FuseFail>10s)	Supervision	OUT	ON OFF	*		*	LED			BO		135	188	1	Yes
170	VT Fuse Failure (alarm instantaneous) (VT FuseFail)	Supervision	OUT	ON OFF	*		*	LED			BO					
171	Failure: Phase Sequence (Fail Ph. Seq.)	Measurem.Superv	OUT	ON OFF	*		*	LED			BO					
175	Failure: Phase Sequence Current (Fail Ph. Seq. I)	Measurem.Superv	OUT	ON OFF	*		*	LED			BO		135	191	1	Yes
176	Failure: Phase Sequence Voltage (Fail Ph. Seq. U)	Measurem.Superv	OUT	ON OFF	*		*	LED			BO		135	192	1	Yes
177	Failure: Battery empty (Fail Battery)	Supervision	OUT	ON OFF	*		*	LED			BO		135	193	1	Yes
181	Error: Measurement system (Error MeasurSys)	Supervision	OUT	ON OFF	*		*	LED			BO		135	178	1	Yes
183	Error Board 1 (Error Board 1)	Supervision	OUT	ON OFF	*		*	LED			BO		135	171	1	Yes
184	Error Board 2 (Error Board 2)	Supervision	OUT	ON OFF	*		*	LED			BO		135	172	1	Yes
185	Error Board 3 (Error Board 3)	Supervision	OUT	ON OFF	*		*	LED			BO		135	173	1	Yes
186	Error Board 4 (Error Board 4)	Supervision	OUT	ON OFF	*		*	LED			BO		135	174	1	Yes
187	Error Board 5 (Error Board 5)	Supervision	OUT	ON OFF	*		*	LED			BO		135	175	1	Yes

No.	Description	Function	Type of Information	Log Buffers				Configurable in Matrix					IEC 60870-5-103			
				Event Log ON/OFF	Trip (Fault) Log On/Off	Ground Fault Log ON/OFF	Marked in Oscill. Record	LED	Binary Input	Function Key	Relay	Chatter Suppression	Type	Information Number	Data Unit	General Interrogation
188	Error Board 6 (Error Board 6)	Supervision	OUT	ON OFF	*		*	LED			BO		135	176	1	Yes
189	Error Board 7 (Error Board 7)	Supervision	OUT	ON OFF	*		*	LED			BO		135	177	1	Yes
190	Error Board 0 (Error Board 0)	Supervision	OUT	ON OFF	*		*	LED			BO		135	210	1	Yes
191	Error: Offset (Error Offset)	Supervision	OUT	ON OFF	*		*	LED			BO					
191.2404	>BLOCK 3I0 time overcurrent (>BLK 3I0 O/C)	3I0 O/C	SP	*	*		*	LED	BI		BO					
191.2411	Time Overcurrent 3I0 is OFF (O/C 3I0 OFF)	3I0 O/C	OUT	ON OFF	*		*	LED			BO		60	151	1	Yes
191.2412	Time Overcurrent 3I0 is BLOCKED (O/C 3I0 BLK)	3I0 O/C	OUT	ON OFF	ON OFF		*	LED			BO		60	152	1	Yes
191.2413	Time Overcurrent 3I0 is ACTIVE (O/C 3I0 ACTIVE)	3I0 O/C	OUT	ON OFF	*		*	LED			BO		60	153	1	Yes
191.2425	Time Overcurrent 3I0 picked up (O/C 3I0 PU)	3I0 O/C	OUT	*	ON OFF		m	LED			BO		60	154	2	Yes
191.2491	O/C 3I0: Not available for this object (O/C 3I0 Not av.)	3I0 O/C	OUT	ON	*		*	LED			BO					
191.2501	>BLOCK time overcurrent 3I0 InRush (>BLK 3I0O/C Inr)	3I0 O/C	SP	ON OFF	ON OFF		*	LED	BI		BO		60	99	1	Yes
191.2502	>BLOCK 3I0>> time overcurrent (>BLOCK 3I0>>)	3I0 O/C	SP	*	*		*	LED	BI		BO		60	9	1	Yes
191.2503	>BLOCK 3I0> time overcurrent (>BLOCK 3I0>)	3I0 O/C	SP	*	*		*	LED	BI		BO		60	10	1	Yes
191.2504	>BLOCK 3I0p time overcurrent (>BLOCK 3I0p)	3I0 O/C	SP	*	*		*	LED	BI		BO		60	11	1	Yes
191.2514	3I0>> BLOCKED (3I0>> BLOCKED)	3I0 O/C	OUT	ON OFF	ON OFF		*	LED			BO		60	155	1	Yes
191.2515	3I0> BLOCKED (3I0> BLOCKED)	3I0 O/C	OUT	ON OFF	ON OFF		*	LED			BO		60	159	1	Yes
191.2516	3I0p BLOCKED (3I0p BLOCKED)	3I0 O/C	OUT	ON OFF	ON OFF		*	LED			BO		60	163	1	Yes
191.2521	3I0>> picked up (3I0>> picked up)	3I0 O/C	OUT	*	ON OFF		*	LED			BO		60	156	2	Yes
191.2522	3I0> picked up (3I0> picked up)	3I0 O/C	OUT	*	ON OFF		*	LED			BO		60	160	2	Yes
191.2523	3I0p picked up (3I0p picked up)	3I0 O/C	OUT	*	ON OFF		*	LED			BO		60	164	2	Yes
191.2524	3I0> InRush picked up (3I0> InRush PU)	3I0 O/C	OUT	*	ON OFF		*	LED			BO		60	96	2	Yes
191.2525	3I0p InRush picked up (3I0p InRush PU)	3I0 O/C	OUT	*	ON OFF		*	LED			BO		60	97	2	Yes
191.2529	3I0 InRush picked up (3I0 InRush PU)	3I0 O/C	OUT	*	ON OFF		*	LED			BO		60	95	2	Yes
191.2541	3I0>> Time Out (3I0>> Time Out)	3I0 O/C	OUT	*	*		*	LED			BO		60	157	2	Yes
191.2542	3I0> Time Out (3I0> Time Out)	3I0 O/C	OUT	*	*		*	LED			BO		60	161	2	Yes
191.2543	3I0p Time Out (3I0p TimeOut)	3I0 O/C	OUT	*	*		*	LED			BO		60	165	2	Yes
191.2551	3I0>> TRIP (3I0>> TRIP)	3I0 O/C	OUT	*	ON		*	LED			BO		60	158	2	Yes
191.2552	3I0> TRIP (3I0> TRIP)	3I0 O/C	OUT	*	ON		*	LED			BO		60	162	2	Yes
191.2553	3I0p TRIP (3I0p TRIP)	3I0 O/C	OUT	*	ON		*	LED			BO		60	166	2	Yes
192	Error:1A/5Ajumper different from setting (Error1A/5Awrong)	Supervision	OUT	ON OFF	*		*	LED			BO		135	169	1	Yes

No.	Description	Function	Type of Information	Log Buffers				Configurable in Matrix					IEC 60870-5-103			
				Event Log ON/OFF	Trip (Fault) Log On/Off	Ground Fault Log ON/OFF	Marked in Oscill. Record	LED	Binary Input	Function Key	Relay	Chatter Suppression	Type	Information Number	Data Unit	General Interrogation
192.2413	Dynamic settings O/C 3I0 are ACTIVE (3I0 Dyn.set.ACT)	ColdLoadPickup	OUT	ON OFF	ON OFF		*	LED			BO		60	249	1	Yes
193	Alarm: Analog input adjustment invalid (Alarm adjustm.)	Supervision	OUT	ON OFF	*		*	LED			BO		135	181	1	Yes
196	Fuse Fail Monitor is switched OFF (Fuse Fail M.OFF)	Supervision	OUT	ON OFF	*		*	LED			BO					
198	Error: Communication Module B (Err. Module B)	Supervision	OUT	ON OFF	*		*	LED			BO		135	198	1	Yes
199	Error: Communication Module C (Err. Module C)	Supervision	OUT	ON OFF	*		*	LED			BO		135	199	1	Yes
199.2404	>BLOCK restricted earth fault prot. (>BLOCK REF)	REF	SP	*	*		*	LED	BI		BO					
199.2411	Restricted earth fault is switched OFF (REF OFF)	REF	OUT	ON OFF	*		*	LED			BO		76	11	1	Yes
199.2412	Restricted earth fault is BLOCKED (REF BLOCKED)	REF	OUT	ON OFF	ON OFF		*	LED			BO		76	12	1	Yes
199.2413	Restricted earth fault is ACTIVE (REF ACTIVE)	REF	OUT	ON OFF	*		*	LED			BO		76	13	1	Yes
199.2421	Restr. earth flt.: picked up (REF picked up)	REF	OUT	*	ON OFF		m	LED			BO		76	17	2	Yes
199.2451	Restr. earth flt.: TRIP (REF TRIP)	REF	OUT	*	ON		m	LED			BO		176	89	2	No
199.2491	REF err.: Not available for this object (REF Not avail.)	REF	OUT	ON	*		*	LED			BO					
199.2492	REF err.: No starpoint CT (REF Err CTstar)	REF	OUT	ON	*		*	LED			BO					
199.2494	REF err.: adverse Adaption factor CT (REF Adap.fact.)	REF	OUT	ON	*		*	LED			BO					
199.2631	Restr. earth flt.: Time delay started (REF T start)	REF	OUT	*	ON OFF		*	LED			BO		76	16	2	Yes
199.2632	REF: Value D at trip (without Tdelay) (REF D:)	REF	VI	*	ON OFF								76	26	4	No
199.2633	REF: Value S at trip (without Tdelay) (REF S:)	REF	VI	*	ON OFF								76	27	4	No
199.2634	REF: Adaption factor CT M1 (REF CT-M1:)	REF	VI	ON OFF												
199.2635	REF: Adaption factor CT M2 (REF CT-M2:)	REF	VI	ON OFF												
199.2636	REF: Adaption factor CT M3 (REF CT-M3:)	REF	VI	ON OFF												
199.2637	REF: Adaption factor CT M4 (REF CT-M4:)	REF	VI	ON OFF												
199.2638	REF: Adaption factor CT M5 (REF CT-M5:)	REF	VI	ON OFF												
199.2639	REF: Adaption factor CT starpnt. wind. (REF CTstar:)	REF	VI	ON OFF												
200	Error: Communication Module D (Err. Module D)	Supervision	OUT	ON OFF	*		*	LED			BO		135	200	1	Yes
200.2404	>BLOCK Time Overcurrent 1Phase (>BLK 1Ph. O/C)	1Phase O/C	SP	*	*		*	LED	BI		BO					
200.2411	Time Overcurrent 1Phase is OFF (O/C 1Ph. OFF)	1Phase O/C	OUT	ON OFF	*		*	LED			BO		76	161	1	Yes
200.2412	Time Overcurrent 1Phase is BLOCKED (O/C 1Ph. BLK)	1Phase O/C	OUT	ON OFF	ON OFF		*	LED			BO		76	162	1	Yes
200.2413	Time Overcurrent 1Phase is ACTIVE (O/C 1Ph. ACT)	1Phase O/C	OUT	ON OFF	*		*	LED			BO		76	163	1	Yes

No.	Description	Function	Type of Information	Log Buffers				Configurable in Matrix					IEC 60870-5-103			
				Event Log ON/OFF	Trip (Fault) Log On/Off	Ground Fault Log ON/OFF	Marked in Oscill. Record	LED	Binary Input	Function Key	Relay	Chatter Suppression	Type	Information Number	Data Unit	General Interrogation
200.2421	Time Overcurrent 1Phase picked up (O/C 1Ph PU)	1Phase O/C	OUT	*	ON OFF		*	LED			BO		76	171	2	Yes
200.2451	Time Overcurrent 1Phase TRIP (O/C 1Ph TRIP)	1Phase O/C	OUT	*	ON		*	LED			BO		76	172	2	Yes
200.2492	O/C 1Phase err.:No auxiliary CT assigned (O/C 1Ph Err CT)	1Phase O/C	OUT	ON	*		*	LED			BO					
200.2502	>BLOCK Time Overcurrent 1Ph. I>> (>BLK 1Ph. I>>)	1Phase O/C	SP	*	*		*	LED	BI		BO					
200.2503	>BLOCK Time Overcurrent 1Ph. I> (>BLK 1Ph. I>)	1Phase O/C	SP	*	*		*	LED	BI		BO					
200.2514	Time Overcurrent 1Phase I>> BLOCKED (O/C 1Ph I>> BLK)	1Phase O/C	OUT	ON OFF	ON OFF		*	LED			BO		76	167	1	Yes
200.2515	Time Overcurrent 1Phase I> BLOCKED (O/C 1Ph I> BLK)	1Phase O/C	OUT	ON OFF	ON OFF		*	LED			BO		76	166	1	Yes
200.2521	Time Overcurrent 1Phase I>> picked up (O/C 1Ph I>> PU)	1Phase O/C	OUT	*	ON OFF		*	LED			BO		76	177	2	Yes
200.2522	Time Overcurrent 1Phase I> picked up (O/C 1Ph I> PU)	1Phase O/C	OUT	*	ON OFF		*	LED			BO		76	174	2	Yes
200.2551	Time Overcurrent 1Phase I>> TRIP (O/C1Ph I>> TRIP)	1Phase O/C	OUT	*	ON		m	LED			BO		76	179	2	Yes
200.2552	Time Overcurrent 1Phase I> TRIP (O/C 1Ph I> TRIP)	1Phase O/C	OUT	*	ON		m	LED			BO		76	175	2	Yes
200.2561	Time Overcurrent 1Phase: I at pick up (O/C 1Ph I:)	1Phase O/C	VI		ON OFF								76	180	4	No
204.2404	>BLOCK Thermal Overload Protection 2 (>BLK Therm.O/L2)	Therm.Overload2	SP	*	*		*	LED	BI		BO					
204.2411	Thermal Overload Protection 2 OFF (Therm.O/L2 OFF)	Therm.Overload2	OUT	ON OFF	*		*	LED			BO					
204.2412	Thermal Overload Protection 2 BLOCKED (Therm.O/L2 BLK)	Therm.Overload2	OUT	ON OFF	ON OFF		*	LED			BO					
204.2413	Thermal Overload Protection 2 ACTIVE (Therm.O/L2 ACT)	Therm.Overload2	OUT	ON OFF	*		*	LED			BO					
204.2421	Thermal Overload 2 picked up (O/L2 Th. pickup)	Therm.Overload2	OUT	ON OFF	*		*	LED			BO					
204.2451	Thermal Overload 2 TRIP (Therm.O/L2 TRIP)	Therm.Overload2	OUT	*	ON OFF		m	LED			BO					
204.2491	Th. Overload 2 Not avail. for this obj. (O/L2 Not avail.)	Therm.Overload2	OUT	ON	*		*	LED			BO					
204.2494	Th. Overload 2 err.:adverse Adap.fact.CT (O/L2 Adap.fact.)	Therm.Overload2	OUT	ON	*		*	LED			BO					
204.2601	>Emergency start Th. Overload Protec. 2 (>EmerStart O/L2)	Therm.Overload2	SP	ON OFF	*		*	LED	BI		BO					
204.2602	Th. Overload 2 Current Alarm (I alarm) (O/L2 I Alarm)	Therm.Overload2	OUT	ON OFF	*		*	LED			BO					
204.2603	Thermal Overload 2 Alarm (O/L2 Θ Alarm)	Therm.Overload2	OUT	ON OFF	*		*	LED			BO					
204.2604	Thermal Overload 2 hot spot Th. Alarm (O/L2 ht.spot Al)	Therm.Overload2	OUT	ON OFF	*		*	LED			BO					
204.2605	Thermal Overload 2 hot spot Th. TRIP (O/L2 h.sp. TRIP)	Therm.Overload2	OUT	ON OFF	*		*	LED			BO					
204.2606	Thermal Overload 2 aging rate Alarm (O/L2 ag.rate Al)	Therm.Overload2	OUT	ON OFF	*		*	LED			BO					
204.2607	Thermal Overload 2 aging rate TRIP (O/L2 ag.rt.TRIP)	Therm.Overload2	OUT	ON OFF	*		*	LED			BO					
204.2609	Th. Overload 2 No temperature measured (O/L2 No Th.meas)	Therm.Overload2	OUT	ON	*		*	LED			BO					

No.	Description	Function	Type of Information	Log Buffers				Configurable in Matrix					IEC 60870-5-103			
				Event Log ON/OFF	Trip (Fault) Log On/Off	Ground Fault Log ON/OFF	Marked in Oscill. Record	LED	Binary Input	Function Key	Relay	Chatter Suppression	Type	Information Number	Data Unit	General Interrogation
205.2404	>BLOCK restricted earth fault prot. 2 (>BLOCK REF2)	REF 2	SP	*	*		*	LED	BI		BO					
205.2411	Restricted earth fault 2 is switched OFF (REF2 OFF)	REF 2	OUT	ON OFF	*		*	LED			BO					
205.2412	Restricted earth fault 2 is BLOCKED (REF2 BLOCKED)	REF 2	OUT	ON OFF	ON OFF		*	LED			BO					
205.2413	Restricted earth fault 2 is ACTIVE (REF2 ACTIVE)	REF 2	OUT	ON OFF	*		*	LED			BO					
205.2421	Restr. earth flt. 2: Time delay started (REF2 T start)	REF 2	OUT	*	ON OFF		m	LED			BO					
205.2451	Restr. earth flt. 2: TRIP (REF2 TRIP)	REF 2	OUT	*	ON		m	LED			BO					
205.2491	REF2 err.: Not available for this object (REF2 Not avail.)	REF 2	OUT	ON	*		*	LED			BO					
205.2492	REF2 err.: No starpoint CT (REF2 Err CTstar)	REF 2	OUT	ON	*		*	LED			BO					
205.2494	REF2 err.: adverse Adaption factor CT (REF2 Adap.fact.)	REF 2	OUT	ON	*		*	LED			BO					
205.2631	Restr. earth flt. 2: picked up (REF2 picked up)	REF 2	OUT	*	ON OFF		*	LED			BO					
205.2632	REF2: Value D at trip (without Tdelay) (REF2 D:)	REF 2	VI	*	ON OFF											
205.2633	REF2: Value S at trip (without Tdelay) (REF2 S:)	REF 2	VI	*	ON OFF											
205.2634	REF2: Adaption factor CT M1 (REF2 CT-M1:)	REF 2	VI	ON OFF												
205.2635	REF2: Adaption factor CT M2 (REF2 CT-M2:)	REF 2	VI	ON OFF												
205.2636	REF2: Adaption factor CT M3 (REF2 CT-M3:)	REF 2	VI	ON OFF												
205.2637	REF2: Adaption factor CT M4 (REF2 CT-M4:)	REF 2	VI	ON OFF												
205.2638	REF2: Adaption factor CT M5 (REF2 CT-M5:)	REF 2	VI	ON OFF												
205.2639	REF2: Adaption factor CT starp-nt. wind. (REF2 CTstar:)	REF 2	VI	ON OFF												
206.2404	>BLOCK Breaker failure 2 (>BLOCK BkrFail2)	Breaker Fail. 2	SP	*	*		*	LED	BI		BO					
206.2411	Breaker failure 2 is switched OFF (BkrFail2 OFF)	Breaker Fail. 2	OUT	ON OFF	*		*	LED			BO					
206.2412	Breaker failure 2 is BLOCKED (BkrFail2 BLOCK)	Breaker Fail. 2	OUT	ON OFF	ON OFF		*	LED			BO					
206.2413	Breaker failure 2 is ACTIVE (BkrFail2 ACTIVE)	Breaker Fail. 2	OUT	ON OFF	*		*	LED			BO					
206.2491	Breaker failure 2 Not avail.for this obj (BkrFail2 Not av)	Breaker Fail. 2	OUT	ON	*		*	LED			BO					
206.2651	>Breaker failure 2 initiated exter-nally (>BrkFail2extSRC)	Breaker Fail. 2	SP	ON OFF	*		*	LED	BI		BO					
206.2652	Breaker failure 2 (internal) PICKUP (BkrFail2 int PU)	Breaker Fail. 2	OUT	*	ON OFF		*	LED			BO					
206.2653	Breaker failure 2 (external) PICKUP (BkrFail2 ext PU)	Breaker Fail. 2	OUT	*	ON OFF		*	LED			BO					
206.2654	BF 2 TRIP T1 (local trip) (BF2 T1TRIP(loc))	Breaker Fail. 2	OUT	*	ON		m	LED			BO					
206.2655	BF 2 TRIP T2 (busbar trip) (BF2 T2TRIP(bus))	Breaker Fail. 2	OUT	*	ON		m	LED			BO					

No.	Description	Function	Type of Information	Log Buffers				Configurable in Matrix					IEC 60870-5-103			
				Event Log ON/OFF	Trip (Fault) Log On/Off	Ground Fault Log ON/OFF	Marked in Oscill. Record	LED	Binary Input	Function Key	Relay	Chatter Suppression	Type	Information Number	Data Unit	General Interrogation
207.2404	>BLOCK Phase time overcurrent 2 (>BLK Phase O/C2)	Phase O/C 2	SP	*	*		*	LED	BI		BO					
207.2411	Time Overcurrent Phase-2 is OFF (O/C Phase-2 OFF)	Phase O/C 2	OUT	ON OFF	*		*	LED			BO					
207.2412	Time Overcurrent Phase-2 is BLOCKED (O/C Phase-2 BLK)	Phase O/C 2	OUT	ON OFF	ON OFF		*	LED			BO					
207.2413	Time Overcurrent Phase-2 is ACTIVE (O/C Phase-2 ACT)	Phase O/C 2	OUT	ON OFF	*		*	LED			BO					
207.2422	Time Overcurrent Phase-2 L1 picked up (O/C Ph2 L1 PU)	Phase O/C 2	OUT	*	ON OFF		*	LED			BO					
207.2423	Time Overcurrent Phase-2 L2 picked up (O/C Ph2 L2 PU)	Phase O/C 2	OUT	*	ON OFF		*	LED			BO					
207.2424	Time Overcurrent Phase-2 L3 picked up (O/C Ph2 L3 PU)	Phase O/C 2	OUT	*	ON OFF		*	LED			BO					
207.2491	O/C Phase2 Not available for this object (O/C Ph2 Not av.)	Phase O/C 2	OUT	ON	*		*	LED			BO					
207.2501	>BLOCK time overcurrent Phase-2 InRush (>BLK Ph.O/C2Inr)	Phase O/C 2	SP	ON OFF	ON OFF		*	LED	BI		BO					
207.2502	>Time Overcurrent Phase-2 BLOCK I>> (>O/C2 BLOCK I>>)	Phase O/C 2	SP	*	*		*	LED	BI		BO					
207.2503	>Time Overcurrent Phase-2 BLOCK I> (>O/C2 BLOCK I>)	Phase O/C 2	SP	*	*		*	LED	BI		BO					
207.2504	>Time Overcurrent Phase-2 BLOCK Ip (>O/C2 BLOCK Ip)	Phase O/C 2	SP	*	*		*	LED	BI		BO					
207.2514	Time Overcurrent Phase-2 I>> BLOCKED (O/C Ph2 I>> BLK)	Phase O/C 2	OUT	ON OFF	ON OFF		*	LED			BO					
207.2515	Time Overcurrent Phase-2 I> BLOCKED (O/C Ph2 I> BLK)	Phase O/C 2	OUT	ON OFF	ON OFF		*	LED			BO					
207.2516	Time Overcurrent Phase-2 Ip BLOCKED (O/C Ph2 Ip BLK)	Phase O/C 2	OUT	ON OFF	ON OFF		*	LED			BO					
207.2521	Time Overcurrent Phase-2 I>> picked up (O/C Ph2 I>> PU)	Phase O/C 2	OUT	*	ON OFF		*	LED			BO					
207.2522	Time Overcurrent Phase-2 I> picked up (O/C Ph2 I> PU)	Phase O/C 2	OUT	*	ON OFF		*	LED			BO					
207.2523	Time Overcurrent Phase-2 Ip picked up (O/C Ph2 Ip PU)	Phase O/C 2	OUT	*	ON OFF		*	LED			BO					
207.2524	Time Overcurrent Ph2 I> InRush picked up (O/C Ph2 I> Inr)	Phase O/C 2	OUT	*	ON OFF		*	LED			BO					
207.2525	Time Overcurrent Ph2 Ip InRush picked up (O/C Ph2 Ip Inr)	Phase O/C 2	OUT	*	ON OFF		*	LED			BO					
207.2526	Time Overcurrent Ph2 L1 InRush picked up (Ph2L1 InRush PU)	Phase O/C 2	OUT	*	ON OFF		*	LED			BO					
207.2527	Time Overcurrent Ph2 L2 InRush picked up (Ph2L2 InRush PU)	Phase O/C 2	OUT	*	ON OFF		*	LED			BO					
207.2528	Time Overcurrent Ph2 L3 InRush picked up (Ph2L3 InRush PU)	Phase O/C 2	OUT	*	ON OFF		*	LED			BO					
207.2531	Time O/C Phase-2 L1 InRush detected (O/C2 L1 InRush)	Phase O/C 2	OUT	*	ON OFF		*	LED			BO					
207.2532	Time O/C Phase-2 L2 InRush detected (O/C2 L2 InRush)	Phase O/C 2	OUT	*	ON OFF		*	LED			BO					
207.2533	Time O/C Phase-2 L3 InRush detected (O/C2 L3 InRush)	Phase O/C 2	OUT	*	ON OFF		*	LED			BO					
207.2534	Time O/C Ph-2 Cross blk: PhX blocked PhY (O/C2 INR X-BLK)	Phase O/C 2	OUT	*	ON OFF		*	LED			BO					

No.	Description	Function	Type of Information	Log Buffers				Configurable in Matrix					IEC 60870-5-103			
				Event Log ON/OFF	Trip (Fault) Log On/Off	Ground Fault Log ON/OFF	Marked in Oscill. Record	LED	Binary Input	Function Key	Relay	Chatter Suppression	Type	Information Number	Data Unit	General Interrogation
207.2541	Time Overcurrent Phase-2 I>> Time Out (O/C Ph2 I>>TOut)	Phase O/C 2	OUT	*	*		*	LED			BO					
207.2542	Time Overcurrent Phase-2 I> Time Out (O/C Ph2 I> TOut)	Phase O/C 2	OUT	*	*		*	LED			BO					
207.2543	Time Overcurrent Phase-2 Ip Time Out (O/C Ph2 Ip TOut)	Phase O/C 2	OUT	*	*		*	LED			BO					
207.2551	Time Overcurrent Phase-2 I>> TRIP (O/C Ph2 I>>TRIP)	Phase O/C 2	OUT	*	ON		*	LED			BO					
207.2552	Time Overcurrent Phase-2 I> TRIP (O/C Ph2 I> TRIP)	Phase O/C 2	OUT	*	ON		*	LED			BO					
207.2553	Time Overcurrent Phase-2 Ip TRIP (O/C Ph2 Ip TRIP)	Phase O/C 2	OUT	*	ON		*	LED			BO					
208.2413	Dynamic settings O/C Phase-2 are ACTIVE (I-2 Dyn.set.ACT)	ColdLoadPickup	OUT	ON OFF	ON OFF		*	LED			BO					
209.2404	>BLOCK Phase time overcurrent 3 (>BLK Phase O/C3)	Phase O/C 3	SP	*	*		*	LED	BI		BO					
209.2411	Time Overcurrent Phase-3 is OFF (O/C Phase-3 OFF)	Phase O/C 3	OUT	ON OFF	*		*	LED			BO					
209.2412	Time Overcurrent Phase-3 is BLOCKED (O/C Phase-3 BLK)	Phase O/C 3	OUT	ON OFF	ON OFF		*	LED			BO					
209.2413	Time Overcurrent Phase-3 is ACTIVE (O/C Phase-3 ACT)	Phase O/C 3	OUT	ON OFF	*		*	LED			BO					
209.2422	Time Overcurrent Phase-3 L1 picked up (O/C Ph3 L1 PU)	Phase O/C 3	OUT	*	ON OFF		*	LED			BO					
209.2423	Time Overcurrent Phase-3 L2 picked up (O/C Ph3 L2 PU)	Phase O/C 3	OUT	*	ON OFF		*	LED			BO					
209.2424	Time Overcurrent Phase-3 L2 picked up (O/C Ph3 L3 PU)	Phase O/C 3	OUT	*	ON OFF		*	LED			BO					
209.2491	O/C Phase3 Not available for this object (O/C Ph3 Not av.)	Phase O/C 3	OUT	ON	*		*	LED			BO					
209.2501	>BLOCK time overcurrent Phase-3 InRush (>BLK Ph.O/C3Inr)	Phase O/C 3	SP	ON OFF	ON OFF		*	LED	BI		BO					
209.2502	>Time Overcurrent Phase-3 BLOCK I>> (>O/C3 BLOCK I>>)	Phase O/C 3	SP	*	*		*	LED	BI		BO					
209.2503	>Time Overcurrent Phase-3 BLOCK I> (>O/C3 BLOCK I>)	Phase O/C 3	SP	*	*		*	LED	BI		BO					
209.2504	>Time Overcurrent Phase-3 BLOCK Ip (>O/C3 BLOCK Ip)	Phase O/C 3	SP	*	*		*	LED	BI		BO					
209.2514	Time Overcurrent Phase-3 I>> BLOCKED (O/C Ph3 I>> BLK)	Phase O/C 3	OUT	ON OFF	ON OFF		*	LED			BO					
209.2515	Time Overcurrent Phase-3 I> BLOCKED (O/C Ph3 I> BLK)	Phase O/C 3	OUT	ON OFF	ON OFF		*	LED			BO					
209.2516	Time Overcurrent Phase-2 Ip BLOCKED (O/C Ph3 Ip BLK)	Phase O/C 3	OUT	ON OFF	ON OFF		*	LED			BO					
209.2521	Time Overcurrent Phase-3 I>> picked up (O/C Ph3 I>> PU)	Phase O/C 3	OUT	*	ON OFF		*	LED			BO					
209.2522	Time Overcurrent Phase-3 I> picked up (O/C Ph3 I> PU)	Phase O/C 3	OUT	*	ON OFF		*	LED			BO					
209.2523	Time Overcurrent Phase-3 Ip picked up (O/C Ph3 Ip PU)	Phase O/C 3	OUT	*	ON OFF		*	LED			BO					
209.2524	Time Overcurrent Ph3 I> InRush picked up (O/C Ph3 I> Inr)	Phase O/C 3	OUT	*	ON OFF		*	LED			BO					
209.2525	Time Overcurrent Ph3 Ip InRush picked up (O/C Ph3 Ip Inr)	Phase O/C 3	OUT	*	ON OFF		*	LED			BO					

No.	Description	Function	Type of Information	Log Buffers				Configurable in Matrix					IEC 60870-5-103			
				Event Log ON/OFF	Trip (Fault) Log On/Off	Ground Fault Log ON/OFF	Marked in Oscill. Record	LED	Binary Input	Function Key	Relay	Chatter Suppression	Type	Information Number	Data Unit	General Interrogation
209.2526	Time Overcurrent Ph3 L1 InRush picked up (Ph3L1 InRush PU)	Phase O/C 3	OUT	*	ON OFF		*	LED			BO					
209.2527	Time Overcurrent Ph3 L2 InRush picked up (Ph3L2 InRush PU)	Phase O/C 3	OUT	*	ON OFF		*	LED			BO					
209.2528	Time Overcurrent Ph3 L3 InRush picked up (Ph3L3 InRush PU)	Phase O/C 3	OUT	*	ON OFF		*	LED			BO					
209.2531	Time O/C Phase-3 L1 InRush detected (O/C3 L1 InRush)	Phase O/C 3	OUT	*	ON OFF		*	LED			BO					
209.2532	Time O/C Phase-3 L2 InRush detected (O/C3 L2 InRush)	Phase O/C 3	OUT	*	ON OFF		*	LED			BO					
209.2533	Time O/C Phase-3 L3 InRush detected (O/C3 L3 InRush)	Phase O/C 3	OUT	*	ON OFF		*	LED			BO					
209.2534	Time O/C Ph-3 Cross blk: PhX blocked PhY (O/C3 INR X-BLK)	Phase O/C 3	OUT	*	ON OFF		*	LED			BO					
209.2541	Time Overcurrent Phase-3 I>> Time Out (O/C Ph3 I>>TOut)	Phase O/C 3	OUT	*	*		*	LED			BO					
209.2542	Time Overcurrent Phase-3 I> Time Out (O/C Ph3 I> TOut)	Phase O/C 3	OUT	*	*		*	LED			BO					
209.2543	Time Overcurrent Phase-3 Ip Time Out (O/C Ph3 Ip TOut)	Phase O/C 3	OUT	*	*		*	LED			BO					
209.2551	Time Overcurrent Phase-3 I>> TRIP (O/C Ph3 I>>TRIP)	Phase O/C 3	OUT	*	ON		*	LED			BO					
209.2552	Time Overcurrent Phase-3 I> TRIP (O/C Ph3 I> TRIP)	Phase O/C 3	OUT	*	ON		*	LED			BO					
209.2553	Time Overcurrent Phase-3 Ip TRIP (O/C Ph3 Ip TRIP)	Phase O/C 3	OUT	*	ON		*	LED			BO					
210.2413	Dynamic settings O/C Phase-3 are ACTIVE (I-3 Dyn.set.ACT)	ColdLoadPickup	OUT	ON OFF	ON OFF		*	LED			BO					
235.2110	>BLOCK Function $00 (>BLOCK $00)	Flx	SP	*	*		*	LED	BI		BO					
235.2111	>Function $00 instantaneous TRIP (>$00 instant.)	Flx	SP	ON OFF	on off		*	LED	BI		BO					
235.2113	>Function $00 BLOCK TRIP Time Delay (>$00 BLK.TDly)	Flx	SP	ON OFF	on off		*	LED	BI		BO					
235.2114	>Function $00 BLOCK TRIP (>$00 BLK.TRIP)	Flx	SP	ON OFF	on off		*	LED	BI		BO					
235.2115	>Function $00 BLOCK TRIP Phase L1 (>$00 BL.TrpL1)	Flx	SP	ON OFF	on off		*	LED	BI		BO					
235.2116	>Function $00 BLOCK TRIP Phase L2 (>$00 BL.TrpL2)	Flx	SP	ON OFF	on off		*	LED	BI		BO					
235.2117	>Function $00 BLOCK TRIP Phase L3 (>$00 BL.TrpL3)	Flx	SP	ON OFF	on off		*	LED	BI		BO					
235.2118	Function $00 is BLOCKED ($00 BLOCKED)	Flx	OUT	ON OFF	ON OFF		*	LED			BO					
235.2119	Function $00 is switched OFF ($00 OFF)	Flx	OUT	ON OFF	*		*	LED			BO					
235.2120	Function $00 is ACTIVE ($00 ACTIVE)	Flx	OUT	ON OFF	*		*	LED			BO					
235.2121	Function $00 picked up ($00 picked up)	Flx	OUT	*	ON OFF		*	LED			BO					
235.2122	Function $00 Pickup Phase L1 ($00 pickup L1)	Flx	OUT	*	ON OFF		*	LED			BO					
235.2123	Function $00 Pickup Phase L2 ($00 pickup L2)	Flx	OUT	*	ON OFF		*	LED			BO					
235.2124	Function $00 Pickup Phase L3 ($00 pickup L3)	Flx	OUT	*	ON OFF		*	LED			BO					

No.	Description	Function	Type of Information	Log Buffers				Configurable in Matrix					IEC 60870-5-103			
				Event Log ON/OFF	Trip (Fault) Log On/Off	Ground Fault Log ON/OFF	Marked in Oscill. Record	LED	Binary Input	Function Key	Relay	Chatter Suppression	Type	Information Number	Data Unit	General Interrogation
235.2125	Function $00 TRIP Delay Time Out ($00 Time Out)	Flx	OUT	*	*		*	LED			BO					
235.2126	Function $00 TRIP ($00 TRIP)	Flx	OUT	*	ON		*	LED			BO					
235.2128	Function $00 has invalid settings ($00 inval.set)	Flx	OUT	ON OFF	*		*	LED			BO					
235.2701	>Function $00 block TRIP L12 (>$00 Blk Trip12)	Flx	SP	ON OFF	on off		*	LED	BI		BO					
235.2702	>Function $00 block TRIP L23 (>$00 Blk Trip23)	Flx	SP	ON OFF	on off		*	LED	BI		BO					
235.2703	>Function $00 block TRIP L31 (>$00 Blk Trip31)	Flx	SP	ON OFF	on off		*	LED	BI		BO					
235.2704	Function $00 Pick-up L12 ($00 Pick-up L12)	Flx	OUT	*	ON OFF		*	LED			BO					
235.2705	Function $00 Pick-up L23 ($00 Pick-up L23)	Flx	OUT	*	ON OFF		*	LED			BO					
235.2706	Function $00 Pick-up L31 ($00 Pick-up L31)	Flx	OUT	*	ON OFF		*	LED			BO					
236.2127	BLOCK Flexible Function (BLK. Flex.Fct.)	P.System Data 2	IntSP	on off	*		*	LED			BO					
251	Broken wire detected (Broken wire)	Supervision	OUT	ON OFF	*		*	LED			BO					
264	Failure: RTD-Box 1 (Fail: RTD-Box 1)	Supervision	OUT	ON OFF	*		*	LED			BO		135	208	1	Yes
267	Failure: RTD-Box 2 (Fail: RTD-Box 2)	Supervision	OUT	ON OFF	*		*	LED			BO		135	209	1	Yes
272	Set Point Operating Hours (SP. Op Hours>)	SetPoint(Stat)	OUT	ON OFF	*		*	LED			BO		135	229	1	Yes
301	Power System fault (Pow.Sys.Flt.)	P.System Data 2	OUT	ON OFF	ON		*						135	231	2	Yes
302	Fault Event (Fault Event)	P.System Data 2	OUT	*	ON		*						135	232	2	Yes
311	Fault in configuration / setting (FaultConfig/Set)	P.System Data 2	OUT	ON OFF	*		*	LED			BO					
312	Gen.err.: Inconsistency group/connection (GenErrGroup-Conn)	P.System Data 2	OUT	ON	*		*	LED			BO					
313	Gen.err.: Sev. earth-CTs with equal typ (GenErrEarthCT)	P.System Data 2	OUT	ON	*		*	LED			BO					
314	Gen.err.: Number of sides / measurements (GenErrSidesMeas)	P.System Data 2	OUT	ON	*		*	LED			BO					
320	Warn: Limit of Memory Data exceeded (Warn Mem. Data)	Device	OUT	ON OFF	*		*	LED			BO					
321	Warn: Limit of Memory Parameter exceeded (Warn Mem. Para.)	Device	OUT	ON OFF	*		*	LED			BO					
321.2404	>BLOCK 3I0 time overcurrent 2 (>BLK 3I0 O/C 2)	3I0 O/C 2	SP	*	*		*	LED	BI		BO					
321.2411	Time Overcurrent 3I0-2 is OFF (O/C 3I0-2 OFF)	3I0 O/C 2	OUT	ON OFF	*		*	LED			BO					
321.2412	Time Overcurrent 3I0-2 is BLOCKED (O/C 3I0-2 BLK)	3I0 O/C 2	OUT	ON OFF	ON OFF		*	LED			BO					
321.2413	Time Overcurrent 3I0-2 is ACTIVE (O/C 3I0-2 ACT)	3I0 O/C 2	OUT	ON OFF	*		*	LED			BO					
321.2425	Time Overcurrent 3I0-2 picked up (O/C 3I0-2 PU)	3I0 O/C 2	OUT	*	ON OFF		*	LED			BO					
321.2491	O/C 3I0-2: Not available for this object (O/C 3I0-2 n/a)	3I0 O/C 2	OUT	ON	*		*	LED			BO					

No.	Description	Function	Type of Information	Log Buffers				Configurable in Matrix					IEC 60870-5-103			
				Event Log ON/OFF	Trip (Fault) Log On/Off	Ground Fault Log ON/OFF	Marked in Oscill. Record	LED	Binary Input	Function Key	Relay	Chatter Suppression	Type	Information Number	Data Unit	General Interrogation
321.2501	>BLOCK time overcurrent 3I0-2 InRush (>BLK 3I0O/C2Inr)	3I0 O/C 2	SP	ON OFF	ON OFF		*	LED	BI		BO					
321.2502	>BLOCK 3I0>> time overcurrent 2 (>BLOCK 3I0-2>>)	3I0 O/C 2	SP	*	*		*	LED	BI		BO					
321.2503	>BLOCK 3I0> time overcurrent 2 (>BLOCK 3I0-2>)	3I0 O/C 2	SP	*	*		*	LED	BI		BO					
321.2504	>BLOCK 3I0p time overcurrent 2 (>BLOCK 3I0-2p)	3I0 O/C 2	SP	*	*		*	LED	BI		BO					
321.2514	Time Overcurrent 3I0-2 3I0>> BLOCKED (3I0-2>> BLOCKED)	3I0 O/C 2	OUT	ON OFF	ON OFF		*	LED			BO					
321.2515	Time Overcurrent 3I0-2 3I0> BLOCKED (3I0-2> BLOCKED)	3I0 O/C 2	OUT	ON OFF	ON OFF		*	LED			BO					
321.2516	Time Overcurrent 3I0-2 3I0p BLOCKED (3I0-2p BLOCKED)	3I0 O/C 2	OUT	ON OFF	ON OFF		*	LED			BO					
321.2521	Time Overcurrent 3I0-2 3I0>> picked up (O/C 3I0-2>> PU)	3I0 O/C 2	OUT	*	ON OFF		*	LED			BO					
321.2522	Time Overcurrent 3I0-2 3I0> picked up (O/C 3I0-2> PU)	3I0 O/C 2	OUT	*	ON OFF		*	LED			BO					
321.2523	Time Overcurrent 3I0-2 3I0p picked up (O/C 3I0-2p PU)	3I0 O/C 2	OUT	*	ON OFF		*	LED			BO					
321.2524	Time O/C 3I0-2 3I0> InRush picked up (3I0-2>InRush PU)	3I0 O/C 2	OUT	*	ON OFF		*	LED			BO					
321.2525	Time O/C 3I0-2 3I0p InRush picked up (3I0-2p InRushPU)	3I0 O/C 2	OUT	*	ON OFF		*	LED			BO					
321.2529	Time Overcurrent 3I0-2 InRush picked up (3I0-2 InRush PU)	3I0 O/C 2	OUT	*	ON OFF		*	LED			BO					
321.2541	Time Overcurrent 3I0-2 3I0>> Time Out (3I0-2>>Time Out)	3I0 O/C 2	OUT	*	*		*	LED			BO					
321.2542	Time Overcurrent 3I0-2 3I0> Time Out (3I0-2> Time Out)	3I0 O/C 2	OUT	*	*		*	LED			BO					
321.2543	Time Overcurrent 3I0-2 3I0p Time Out (3I0-2p Time Out)	3I0 O/C 2	OUT	*	*		*	LED			BO					
321.2551	Time Overcurrent 3I0-2 3I0>> TRIP (O/C 3I0-2>>TRIP)	3I0 O/C 2	OUT	*	ON		*	LED			BO					
321.2552	Time Overcurrent 3I0-2 3I0> TRIP (O/C 3I0-2> TRIP)	3I0 O/C 2	OUT	*	ON		*	LED			BO					
321.2553	Time Overcurrent 3I0-2 3I0p TRIP (O/C 3I0-2p TRIP)	3I0 O/C 2	OUT	*	ON		*	LED			BO					
322	Warn: Limit of Memory Operation exceeded (Warn Mem. Oper.)	Device	OUT	ON OFF	*		*	LED			BO					
322.2413	Dynamic settings O/C 3I0-2 are ACTIVE (3I0-2 Dyn.s.ACT)	ColdLoadPickup	OUT	ON OFF	ON OFF		*	LED			BO					
323	Warn: Limit of Memory New exceeded (Warn Mem. New)	Device	OUT	ON OFF	*		*	LED			BO					
323.2404	>BLOCK 3I0 time overcurrent 3 (>BLK 3I0 O/C 3)	3I0 O/C 3	SP	*	*		*	LED	BI		BO					
323.2411	Time Overcurrent 3I0-3 is OFF (O/C 3I0-3 OFF)	3I0 O/C 3	OUT	ON OFF	*		*	LED			BO					
323.2412	Time Overcurrent 3I0-3 is BLOCKED (O/C 3I0-3 BLK)	3I0 O/C 3	OUT	ON OFF	ON OFF		*	LED			BO					
323.2413	Time Overcurrent 3I0-3 is ACTIVE (O/C 3I0-3 ACT)	3I0 O/C 3	OUT	ON OFF	*		*	LED			BO					
323.2425	Time Overcurrent 3I0-3 picked up (O/C 3I0-3 PU)	3I0 O/C 3	OUT	*	ON OFF		*	LED			BO					
323.2491	O/C 3I0-3: Not available for this object (O/C 3I0-3 n/a)	3I0 O/C 3	OUT	ON	*		*	LED			BO					

No.	Description	Function	Type of Information	Log Buffers				Configurable in Matrix					IEC 60870-5-103			
				Event Log ON/OFF	Trip (Fault) Log On/Off	Ground Fault Log ON/OFF	Marked in Oscill. Record	LED	Binary Input	Function Key	Relay	Chatter Suppression	Type	Information Number	Data Unit	General Interrogation
323.2501	>BLOCK time overcurrent 3I0-3 InRush (>BLK 3I0O/C3Inr)	3I0 O/C 3	SP	ON OFF	ON OFF		*	LED	BI		BO					
323.2502	>BLOCK 3I0>> time overcurrent 3 (>BLOCK 3I0-3>>)	3I0 O/C 3	SP	*	*		*	LED	BI		BO					
323.2503	>BLOCK 3I0> time overcurrent 3 (>BLOCK 3I0-3>)	3I0 O/C 3	SP	*	*		*	LED	BI		BO					
323.2504	>BLOCK 3I0p time overcurrent 3 (>BLOCK 3I0-3p)	3I0 O/C 3	SP	*	*		*	LED	BI		BO					
323.2514	Time Overcurrent 3I0-3 3I0>> BLOCKED (3I0-3>> BLOCKED)	3I0 O/C 3	OUT	ON OFF	ON OFF		*	LED			BO					
323.2515	Time Overcurrent 3I0-3 3I0> BLOCKED (3I0-3> BLOCKED)	3I0 O/C 3	OUT	ON OFF	ON OFF		*	LED			BO					
323.2516	Time Overcurrent 3I0-3 3I0p BLOCKED (3I0-3p BLOCKED)	3I0 O/C 3	OUT	ON OFF	ON OFF		*	LED			BO					
323.2521	Time Overcurrent 3I0-3 3I0>> picked up (O/C 3I0-3>> PU)	3I0 O/C 3	OUT	*	ON OFF		*	LED			BO					
323.2522	Time Overcurrent 3I0-3 3I0> picked up (O/C 3I0-3> PU)	3I0 O/C 3	OUT	*	ON OFF		*	LED			BO					
323.2523	Time Overcurrent 3I0-3 3I0p picked up (O/C 3I0-3p PU)	3I0 O/C 3	OUT	*	ON OFF		*	LED			BO					
323.2524	Time O/C 3I0-3 3I0> InRush picked up (3I0-3>InRush PU)	3I0 O/C 3	OUT	*	ON OFF		*	LED			BO					
323.2525	Time O/C 3I0-3 3I0p InRush picked up (3I0-3p InRushPU)	3I0 O/C 3	OUT	*	ON OFF		*	LED			BO					
323.2529	Time Overcurrent 3I0-3 InRush picked up (3I0-3 InRush PU)	3I0 O/C 3	OUT	*	ON OFF		*	LED			BO					
323.2541	Time Overcurrent 3I0-3 3I0>> Time Out (3I0-3>>Time Out)	3I0 O/C 3	OUT	*	*		*	LED			BO					
323.2542	Time Overcurrent 3I0-3 3I0> Time Out (3I0-3> Time Out)	3I0 O/C 3	OUT	*	*		*	LED			BO					
323.2543	Time Overcurrent 3I0-3 3I0p Time Out (3I0-3p Time Out)	3I0 O/C 3	OUT	*	*		*	LED			BO					
323.2551	Time Overcurrent 3I0-3 3I0>> TRIP (O/C 3I0-3>>TRIP)	3I0 O/C 3	OUT	*	ON		*	LED			BO					
323.2552	Time Overcurrent 3I0-3 3I0> TRIP (O/C 3I0-3> TRIP)	3I0 O/C 3	OUT	*	ON		*	LED			BO					
323.2553	Time Overcurrent 3I0-3 3I0p TRIP (O/C 3I0-3p TRIP)	3I0 O/C 3	OUT	*	ON		*	LED			BO					
324.2413	Dynamic settings O/C 3I0-3 are ACTIVE (3I0-3 Dyn.s.ACT)	ColdLoadPickup	OUT	ON OFF	ON OFF		*	LED			BO					
325.2404	>BLOCK Earth time overcurrent 2 (>BLK Earth O/C2)	Earth O/C 2	SP	*	*		*	LED	BI		BO					
325.2411	Time Overcurrent Earth 2 is OFF (O/C Earth2 OFF)	Earth O/C 2	OUT	ON OFF	*		*	LED			BO					
325.2412	Time Overcurrent Earth 2 is BLOCKED (O/C Earth2 BLK)	Earth O/C 2	OUT	ON OFF	ON OFF		*	LED			BO					
325.2413	Time Overcurrent Earth 2 is ACTIVE (O/C Earth2 ACT)	Earth O/C 2	OUT	ON OFF	*		*	LED			BO					
325.2425	Time Overcurrent Earth 2 picked up (O/C Earth2 PU)	Earth O/C 2	OUT	*	ON OFF		*	LED			BO					
325.2492	O/C Earth2 err.:No auxiliary CT assigned (O/C E2 ErrCT)	Earth O/C 2	OUT	ON	*		*	LED			BO					
325.2501	>BLOCK time overcurrent Earth 2 InRush (>BLK E O/C2 Inr)	Earth O/C 2	SP	ON OFF	ON OFF		*	LED	BI		BO					
325.2502	>BLOCK IE>> time overcurrent 2 (>BLOCK IE-2>>)	Earth O/C 2	SP	*	*		*	LED	BI		BO					

No.	Description	Function	Type of Information	Log Buffers				Configurable in Matrix					IEC 60870-5-103			
				Event Log ON/OFF	Trip (Fault) Log On/Off	Ground Fault Log ON/OFF	Marked in Oscill. Record	LED	Binary Input	Function Key	Relay	Chatter Suppression	Type	Information Number	Data Unit	General Interrogation
325.2503	>BLOCK IE> time overcurrent 2 (>BLOCK IE-2>)	Earth O/C 2	SP	*	*		*	LED	BI		BO					
325.2504	>BLOCK IEp time overcurrent 2 (>BLOCK IE-2p)	Earth O/C 2	SP	*	*		*	LED	BI		BO					
325.2514	Time Overcurrent Earth 2 IE>> BLOCKED (IE-2>> BLOCKED)	Earth O/C 2	OUT	ON OFF	ON OFF		*	LED			BO					
325.2515	Time Overcurrent Earth 2 IE> BLOCKED (IE-2> BLOCKED)	Earth O/C 2	OUT	ON OFF	ON OFF		*	LED			BO					
325.2516	Time Overcurrent Earth 2 IEp BLOCKED (IE-2p BLOCKED)	Earth O/C 2	OUT	ON OFF	ON OFF		*	LED			BO					
325.2521	Time Overcurrent Earth 2 IE>> picked up (O/C E2 IE>> PU)	Earth O/C 2	OUT	*	ON OFF		*	LED			BO					
325.2522	Time Overcurrent Earth 2 IE> picked up (O/C E2 IE> PU)	Earth O/C 2	OUT	*	ON OFF		*	LED			BO					
325.2523	Time Overcurrent Earth 2 IEp picked up (O/C E2 IEp PU)	Earth O/C 2	OUT	*	ON OFF		*	LED			BO					
325.2524	Time O/C Earth 2 IE> InRush picked up (IE-2> InRushPU)	Earth O/C 2	OUT	*	ON OFF		*	LED			BO					
325.2525	Time O/C Earth 2 IEp InRush picked up (IE-2p InRushPU)	Earth O/C 2	OUT	*	ON OFF		*	LED			BO					
325.2529	Earth 2 InRush picked up (Earth2 InRushPU)	Earth O/C 2	OUT	*	ON OFF		*	LED			BO					
325.2541	Time Overcurrent Earth 2 IE>> Time Out (IE-2>> Time Out)	Earth O/C 2	OUT	*	*		*	LED			BO					
325.2542	Time Overcurrent Earth 2 IE> Time Out (IE-2> Time Out)	Earth O/C 2	OUT	*	*		*	LED			BO					
325.2543	Time Overcurrent Earth 2 IEp Time Out (IE-2p Time Out)	Earth O/C 2	OUT	*	*		*	LED			BO					
325.2551	Time Overcurrent Earth 2 IE>> TRIP (O/C E2 IE>>TRIP)	Earth O/C 2	OUT	*	ON		*	LED			BO					
325.2552	Time Overcurrent Earth 2 IE> TRIP (O/C E2 IE> TRIP)	Earth O/C 2	OUT	*	ON		*	LED			BO					
325.2553	Time Overcurrent Earth 2 IEp TRIP (O/C E2 IEp TRIP)	Earth O/C 2	OUT	*	ON		*	LED			BO					
326.2413	Dynamic settings O/C Earth-2 are ACTIVE (IE-2 Dyn.s. ACT)	ColdLoadPickup	OUT	ON OFF	ON OFF		*	LED			BO					
361	>Failure: Feeder VT (MCB tripped) (>FAIL:Feeder VT)	Supervision	SP	ON OFF	ON OFF		*	LED	BI		BO		150	38	1	Yes
390	>Warning stage from gas in oil detector (>Gas in oil)	Ext. Tansf.Ann.	SP	ON OFF	*		*	LED	BI		BO					
391	>Warning stage from Buchholz protection (>Buchh. Warn)	Ext. Tansf.Ann.	SP	ON OFF	*		*	LED	BI		BO		150	41	1	Yes
392	>Tripp. stage from Buchholz protection (>Buchh. Trip)	Ext. Tansf.Ann.	SP	ON OFF	*		*	LED	BI		BO		150	42	1	Yes
393	>Tank supervision from Buchh. protect. (>Buchh. Tank)	Ext. Tansf.Ann.	SP	ON OFF	*		*	LED	BI		BO		150	43	1	Yes
409	>BLOCK Op Counter (>BLOCK Op Count)	Statistics	SP	ON OFF	*		*	LED	BI		BO					
501	Relay PICKUP (Relay PICKUP)	P.System Data 2	OUT	*	ON		M	LED			BO		150	151	2	Yes
511	Relay GENERAL TRIP command (Relay TRIP)	P.System Data 2	OUT	*	ON		M	LED			BO		150	161	2	Yes
545	Time from Pickup to drop out (PU Time)	P.System Data 2	VI													
546	Time from Pickup to TRIP (TRIP Time)	P.System Data 2	VI													

No.	Description	Function	Type of Information	Log Buffers				Configurable in Matrix					IEC 60870-5-103			
				Event Log ON/OFF	Trip (Fault) Log On/Off	Ground Fault Log ON/OFF	Marked in Oscill. Record	LED	Binary Input	Function Key	Relay	Chatter Suppression	Type	Information Number	Data Unit	General Interrogation
576	Primary fault current IL1 side1 (IL1S1:)	P.System Data 2	VI	*	*											
577	Primary fault current IL2 side1 (IL2S1:)	P.System Data 2	VI	*	*											
578	Primary fault current IL3 side1 (IL3S1:)	P.System Data 2	VI	*	*											
579	Primary fault current IL1 side2 (IL1S2:)	P.System Data 2	VI	*	*											
580	Primary fault current IL2 side2 (IL2S2:)	P.System Data 2	VI	*	*											
581	Primary fault current IL3 side2 (IL3S2:)	P.System Data 2	VI	*	*											
582	Primary fault current I1 (I1:)	P.System Data 2	VI	*	*											
583	Primary fault current I2 (I2:)	P.System Data 2	VI	*	*											
584	Primary fault current I3 (I3:)	P.System Data 2	VI	*	*											
585	Primary fault current I4 (I4:)	P.System Data 2	VI	*	*											
586	Primary fault current I5 (I5:)	P.System Data 2	VI	*	*											
587	Primary fault current I6 (I6:)	P.System Data 2	VI	*	*											
588	Primary fault current I7 (I7:)	P.System Data 2	VI	*	*											
916	Increment of active energy (WpΔ=)	Energy	-													
917	Increment of reactive energy (WqΔ=)	Energy	-													
1000	Number of breaker TRIP commands (# TRIPs=)	Statistics	VI													
1020	Counter of operating hours (Op.Hours=)	Statistics	VI													
4523	>Block external trip 1 (>BLOCK Ext 1)	External Trips	SP	*	*		*	LED	BI		BO					
4526	>Trigger external trip 1 (>Ext trip 1)	External Trips	SP	ON OFF	*		*	LED	BI		BO		51	126	1	Yes
4531	External trip 1 is switched OFF (Ext 1 OFF)	External Trips	OUT	ON OFF	*		*	LED			BO		51	131	1	Yes
4532	External trip 1 is BLOCKED (Ext 1 BLOCKED)	External Trips	OUT	ON OFF	ON OFF		*	LED			BO		51	132	1	Yes
4533	External trip 1 is ACTIVE (Ext 1 ACTIVE)	External Trips	OUT	ON OFF	*		*	LED			BO		51	133	1	Yes
4536	External trip 1: General picked up (Ext 1 picked up)	External Trips	OUT	*	ON OFF		*	LED			BO		51	136	2	Yes
4537	External trip 1: General TRIP (Ext 1 Gen. TRIP)	External Trips	OUT	*	ON		*	LED			BO		51	137	2	Yes
4543	>BLOCK external trip 2 (>BLOCK Ext 2)	External Trips	SP	*	*		*	LED	BI		BO					
4546	>Trigger external trip 2 (>Ext trip 2)	External Trips	SP	ON OFF	*		*	LED	BI		BO		51	146	1	Yes
4551	External trip 2 is switched OFF (Ext 2 OFF)	External Trips	OUT	ON OFF	*		*	LED			BO		51	151	1	Yes
4552	External trip 2 is BLOCKED (Ext 2 BLOCKED)	External Trips	OUT	ON OFF	ON OFF		*	LED			BO		51	152	1	Yes
4553	External trip 2 is ACTIVE (Ext 2 ACTIVE)	External Trips	OUT	ON OFF	*		*	LED			BO		51	153	1	Yes
4556	External trip 2: General picked up (Ext 2 picked up)	External Trips	OUT	*	ON OFF		*	LED			BO		51	156	2	Yes
4557	External trip 2: General TRIP (Ext 2 Gen. TRIP)	External Trips	OUT	*	ON		*	LED			BO		51	157	2	Yes

No.	Description	Function	Type of Information	Log Buffers				Configurable in Matrix					IEC 60870-5-103			
				Event Log ON/OFF	Trip (Fault) Log On/Off	Ground Fault Log ON/OFF	Marked in Oscill. Record	LED	Binary Input	Function Key	Relay	Chatter Suppression	Type	Information Number	Data Unit	General Interrogation
5010	>BLOCK fuse failure monitor (>FFM BLOCK)	Supervision	SP	ON OFF	ON OFF		*	LED	BI		BO		71	7	1	Yes
5083	>BLOCK reverse power protection (>Pr BLOCK)	Reverse Power	SP	*	*		*	LED	BI		BO					
5086	>Stop valve tripped (>SV tripped)	Reverse Power	SP	ON OFF	ON OFF		*	LED	BI		BO		70	77	1	Yes
5091	Reverse power prot. is switched OFF (Pr OFF)	Reverse Power	OUT	ON OFF	*		*	LED			BO		70	81	1	Yes
5092	Reverse power protection is BLOCKED (Pr BLOCKED)	Reverse Power	OUT	ON OFF	ON OFF		*	LED			BO		70	82	1	Yes
5093	Reverse power protection is ACTIVE (Pr ACTIVE)	Reverse Power	OUT	ON OFF	*		*	LED			BO		70	83	1	Yes
5096	Reverse power: picked up (Pr picked up)	Reverse Power	OUT	*	ON OFF		m	LED			BO		70	84	2	Yes
5097	Reverse power: TRIP (Pr TRIP)	Reverse Power	OUT	*	ON		m	LED			BO		70	85	2	Yes
5098	Reverse power: TRIP with stop valve (Pr+SV TRIP)	Reverse Power	OUT	*	ON		m	LED			BO		70	86	2	Yes
5099	Reverse pwr err: CT fact too large/small (Pr CT Fact ><)	Reverse Power	OUT	ON	*		*	LED			BO					
5100	Reverse power err: Allocation of VT (Pr VT error)	Reverse Power	OUT	ON	*		*	LED			BO					
5101	Reverse pwr err:Not avail. for this obj. (Pr obj. error)	Reverse Power	OUT	ON	*		*	LED			BO					
5113	>BLOCK forward power supervision (>Pf BLOCK)	Forward Power	SP	*	*		*	LED	BI		BO					
5116	>BLOCK forw. power superv. Pf< stage (>Pf< BLOCK)	Forward Power	SP	ON OFF	ON OFF		*	LED	BI		BO		70	102	1	Yes
5117	>BLOCK forw. power superv. Pf> stage (>Pf> BLOCK)	Forward Power	SP	ON OFF	ON OFF		*	LED	BI		BO		70	103	1	Yes
5121	Forward power supervis. is switched OFF (Pf OFF)	Forward Power	OUT	ON OFF	*		*	LED			BO		70	106	1	Yes
5122	Forward power supervision is BLOCKED (Pf BLOCKED)	Forward Power	OUT	ON OFF	ON OFF		*	LED			BO		70	107	1	Yes
5123	Forward power supervision is ACTIVE (Pf ACTIVE)	Forward Power	OUT	ON OFF	*		*	LED			BO		70	108	1	Yes
5126	Forward power: Pf< stage picked up (Pf< picked up)	Forward Power	OUT	*	ON OFF		m	LED			BO		70	109	2	Yes
5127	Forward power: Pf> stage picked up (Pf> picked up)	Forward Power	OUT	*	ON OFF		m	LED			BO		70	110	2	Yes
5128	Forward power: Pf< stage TRIP (Pf< TRIP)	Forward Power	OUT	*	ON		m	LED			BO		70	111	2	Yes
5129	Forward power: Pf> stage TRIP (Pf> TRIP)	Forward Power	OUT	*	ON		m	LED			BO		70	112	2	Yes
5130	Forward pwr err: CT fact too large/small (Pf> CT fact ><)	Forward Power	OUT	ON	*		*	LED			BO					
5131	Forward power error: VT assignment (Pf> VT error)	Forward Power	OUT	ON	*		*	LED			BO					
5132	Forward pwr err:Not avail. for this obj. (Pf> Object err)	Forward Power	OUT	ON	*		*	LED			BO					
5143	>BLOCK I2 (Unbalance Load) (>BLOCK I2)	Unbalance Load	SP	*	*		*	LED	BI		BO		70	126	1	Yes
5145	>Reverse Phase Rotation (>Reverse Rot.)	P.System Data 1	SP	ON OFF	*		*	LED	BI		BO		71	34	1	Yes
5146	>Reset memory for thermal replica I2 (>RM th.rep. I2)	Unbalance Load	SP	*	*		*	LED	BI		BO		70	127	1	Yes

No.	Description	Function	Type of Information	Log Buffers				Configurable in Matrix					IEC 60870-5-103			
				Event Log ON/OFF	Trip (Fault) Log On/Off	Ground Fault Log ON/OFF	Marked in Oscill. Record	LED	Binary Input	Function Key	Relay	Chatter Suppression	Type	Information Number	Data Unit	General Interrogation
5147	Phase Rotation L1L2L3 (Rotation L1L2L3)	P.System Data 1	OUT	ON OFF	*		*	LED			BO		70	128	1	Yes
5148	Phase Rotation L1L3L2 (Rotation L1L3L2)	P.System Data 1	OUT	ON OFF	*		*	LED			BO		70	129	1	Yes
5151	I2 switched OFF (I2 OFF)	Unbalance Load	OUT	ON OFF	*		*	LED			BO		70	131	1	Yes
5152	I2 is BLOCKED (I2 BLOCKED)	Unbalance Load	OUT	ON OFF	ON OFF		*	LED			BO		70	132	1	Yes
5153	I2 is ACTIVE (I2 ACTIVE)	Unbalance Load	OUT	ON OFF	*		*	LED			BO		70	133	1	Yes
5157	Unbalanced load: Thermal warning stage (I2 th. Warn)	Unbalance Load	OUT	ON OFF	*		*	LED			BO		70	135	2	Yes
5158	Reset memory of thermal replica I2 (RM th.rep. I2)	Unbalance Load	OUT	ON OFF	ON OFF		*	LED			BO		70	137	1	Yes
5159	I2>> picked up (I2>> picked up)	Unbalance Load	OUT	*	ON OFF		*	LED			BO		70	138	2	Yes
5160	Unbalanced load: TRIP of current stage (I2>> TRIP)	Unbalance Load	OUT	*	ON			LED			BO					
5161	Unbalanced load: TRIP of thermal stage (I2 Θ TRIP)	Unbalance Load	OUT	*	ON			LED			BO					
5165	I2> picked up (I2> picked up)	Unbalance Load	OUT	*	ON OFF		*	LED			BO		70	150	2	Yes
5166	I2p picked up (I2p picked up)	Unbalance Load	OUT	*	ON OFF		*	LED			BO		70	141	2	Yes
5167	Unbalanced load: Pick-up I2 thermal (I2th Pick-up)	Unbalance Load	OUT	*	ON OFF		*	LED			BO		70	142	2	Yes
5168	I2 err.: adverse Adaption factor CT (I2 Adap.fact.)	Unbalance Load	OUT	ON	*		*	LED			BO					
5170	I2 TRIP (I2 TRIP)	Unbalance Load	OUT	*	ON		m	LED			BO		70	149	2	Yes
5172	I2 err.: Not available for this object (I2 Not avail.)	Unbalance Load	OUT	ON	*		*	LED			BO					
5178	I2> TRIP (I2> TRIP)	Unbalance Load	OUT	*	ON			LED			BO					
5179	I2p TRIP (I2p TRIP)	Unbalance Load	OUT	*	ON			LED			BO					
5203	>BLOCK frequency protection (>BLOCK Freq.)	Frequency Prot.	SP	*	*		*	LED	BI		BO		70	176	1	Yes
5211	Frequency protection is switched OFF (Freq. OFF)	Frequency Prot.	OUT	ON OFF	*		*	LED			BO		70	181	1	Yes
5212	Frequency protection is BLOCKED (Freq. BLOCKED)	Frequency Prot.	OUT	ON OFF	ON OFF		*	LED			BO		70	182	1	Yes
5213	Frequency protection is ACTIVE (Freq. ACTIVE)	Frequency Prot.	OUT	ON OFF	*		*	LED			BO		70	183	1	Yes
5214	Frequency protection undervoltage Blk (Freq UnderV Blk)	Frequency Prot.	OUT	ON OFF	ON OFF		*	LED			BO		70	184	1	Yes
5254	Frequency protection: error VT assign. (Freq. error VT)	Frequency Prot.	OUT	ON	*		*	LED			BO					
5255	Frequency prot.:Not avail. for this obj. (Freq. err. Obj.)	Frequency Prot.	OUT	ON	*		*	LED			BO					
5353	>BLOCK overexcitation protection (>U/f BLOCK)	Overexcit.	SP	*	*		*	LED	BI		BO					
5357	>Reset memory of thermal replica U/f (>RM th.rep. U/f)	Overexcit.	SP	*	*		*	LED	BI		BO					
5361	Overexcitation protection is swiched OFF (U/f> OFF)	Overexcit.	OUT	ON OFF	*		*	LED			BO		71	83	1	Yes
5362	Overexcitation protection is BLOCKED (U/f> BLOCKED)	Overexcit.	OUT	ON OFF	ON OFF		*	LED			BO		71	84	1	Yes

No.	Description	Function	Type of Information	Log Buffers				Configurable in Matrix					IEC 60870-5-103			
				Event Log ON/OFF	Trip (Fault) Log On/Off	Ground Fault Log ON/OFF	Marked in Oscill. Record	LED	Binary Input	Function Key	Relay	Chatter Suppression	Type	Information Number	Data Unit	General Interrogation
5363	Overexcitation protection is ACTIVE (U/f> ACTIVE)	Overexcit.	OUT	ON OFF	*		*	LED			BO		71	85	1	Yes
5367	Overexc. prot.: U/f warning stage (U/f> warn)	Overexcit.	OUT	ON OFF	*		*	LED			BO		71	86	1	Yes
5369	Reset memory of thermal replica U/f (RM th.rep. U/f)	Overexcit.	OUT	ON OFF	*		*	LED			BO		71	88	1	Yes
5370	Overexc. prot.: U/f> picked up (U/f> picked up)	Overexcit.	OUT	*	ON OFF		*	LED			BO		71	89	2	Yes
5371	Overexc. prot.: TRIP of U/f>> stage (U/f>> TRIP)	Overexcit.	OUT	*	ON		m	LED			BO		71	90	2	Yes
5372	Overexc. prot.: TRIP of th. stage (U/f> th.TRIP)	Overexcit.	OUT	*	ON		*	LED			BO		71	91	2	Yes
5373	Overexc. prot.: U/f>> picked up (U/f>> pick.up)	Overexcit.	OUT	*	ON OFF		*	LED			BO		71	92	2	Yes
5376	Overexc. err: No VT assigned (U/f Err No VT)	Overexcit.	OUT	ON	*		*	LED			BO					
5377	Overexc. err: Not avail. for this object (U/f Not avail.)	Overexcit.	OUT	ON	*		*	LED			BO					
5603	>BLOCK differential protection (>Diff BLOCK)	Diff. Prot	SP	*	*		*	LED	BI		BO					
5615	Differential protection is switched OFF (Diff OFF)	Diff. Prot	OUT	ON OFF	*		*	LED			BO		75	15	1	Yes
5616	Differential protection is BLOCKED (Diff BLOCKED)	Diff. Prot	OUT	ON OFF	ON OFF		*	LED			BO		75	16	1	Yes
5617	Differential protection is ACTIVE (Diff ACTIVE)	Diff. Prot	OUT	ON OFF	*		*	LED			BO		75	17	1	Yes
5620	Diff err.: adverse Adaption factor CT (Diff Adap.fact.)	Diff. Prot	OUT	ON	*		*	LED			BO					
5631	Differential protection picked up (Diff picked up)	Diff. Prot	OUT	*	ON OFF		m	LED			BO		75	31	2	Yes
5644	Diff: Blocked by 2.Harmon. L1 (Diff 2.Harm L1)	Diff. Prot	OUT	*	ON OFF		*	LED			BO		75	44	2	Yes
5645	Diff: Blocked by 2.Harmon. L2 (Diff 2.Harm L2)	Diff. Prot	OUT	*	ON OFF		*	LED			BO		75	45	2	Yes
5646	Diff: Blocked by 2.Harmon. L3 (Diff 2.Harm L3)	Diff. Prot	OUT	*	ON OFF		*	LED			BO		75	46	2	Yes
5647	Diff: Blocked by n.Harmon. L1 (Diff n.Harm L1)	Diff. Prot	OUT	*	ON OFF		*	LED			BO		75	47	2	Yes
5648	Diff: Blocked by n.Harmon. L2 (Diff n.Harm L2)	Diff. Prot	OUT	*	ON OFF		*	LED			BO		75	48	2	Yes
5649	Diff: Blocked by n.Harmon. L3 (Diff n.Harm L3)	Diff. Prot	OUT	*	ON OFF		*	LED			BO		75	49	2	Yes
5651	Diff. prot.: Blocked by ext. fault L1 (Diff Bl. exF.L1)	Diff. Prot	OUT	*	ON OFF		*	LED			BO		75	51	2	Yes
5652	Diff. prot.: Blocked by ext. fault L2 (Diff Bl. exF.L2)	Diff. Prot	OUT	*	ON OFF		*	LED			BO		75	52	2	Yes
5653	Diff. prot.: Blocked by ext. fault.L3 (Diff Bl. exF.L3)	Diff. Prot	OUT	*	ON OFF		*	LED			BO		75	53	2	Yes
5657	Diff: Crossblock by 2.Harmonic (DiffCrosBlk 2HM)	Diff. Prot	OUT	*	ON OFF		*	LED			BO					
5658	Diff: Crossblock by n.Harmonic (DiffCrosBlk nHM)	Diff. Prot	OUT	*	ON OFF		*	LED			BO					
5660	Diff: Crossblock by ext. fault (DiffCrosBlk exF)	Diff. Prot	OUT	*	ON OFF		*	LED			BO					
5662	Diff. prot.: Blocked by CT fault L1 (Block Iflt.L1)	Diff. Prot	OUT	ON OFF	ON OFF		*	LED			BO		75	62	2	Yes

No.	Description	Function	Type of Information	Log Buffers				Configurable in Matrix					IEC 60870-5-103			
				Event Log ON/OFF	Trip (Fault) Log On/Off	Ground Fault Log ON/OFF	Marked in Oscill. Record	LED	Binary Input	Function Key	Relay	Chatter Suppression	Type	Information Number	Data Unit	General Interrogation
5663	Diff. prot.: Blocked by CT fault L2 (Block Iflt.L2)	Diff. Prot	OUT	ON OFF	ON OFF		*	LED			BO		75	63	2	Yes
5664	Diff. prot.: Blocked by CT fault L3 (Block Iflt.L3)	Diff. Prot	OUT	ON OFF	ON OFF		*	LED			BO		75	64	2	Yes
5666	Diff: Increase of char. phase (start) L1 (DiffStrtInChaL1)	Diff. Prot	OUT	ON OFF	ON OFF		*	LED			BO					
5667	Diff: Increase of char. phase (start) L2 (DiffStrtInChaL2)	Diff. Prot	OUT	ON OFF	ON OFF		*	LED			BO					
5668	Diff: Increase of char. phase (start) L3 (DiffStrtInChaL3)	Diff. Prot	OUT	ON OFF	ON OFF		*	LED			BO					
5670	Diff: Curr-Release for Trip (Diff I-Release)	Diff. Prot	OUT	*	ON OFF		*	LED			BO					
5671	Differential protection TRIP (Diff TRIP)	Diff. Prot	OUT	*	*		*	LED			BO		176	68	2	No
5672	Differential protection: TRIP L1 (Diff TRIP L1)	Diff. Prot	OUT	*	*		*	LED			BO		176	86	2	No
5673	Differential protection: TRIP L2 (Diff TRIP L2)	Diff. Prot	OUT	*	*		*	LED			BO		176	87	2	No
5674	Differential protection: TRIP L3 (Diff TRIP L3)	Diff. Prot	OUT	*	*		*	LED			BO		176	88	2	No
5681	Diff. prot.: IDIFF> L1 (without Tdelay) (Diff> L1)	Diff. Prot	OUT	*	ON OFF		*	LED			BO		75	81	2	Yes
5682	Diff. prot.: IDIFF> L2 (without Tdelay) (Diff> L2)	Diff. Prot	OUT	*	ON OFF		*	LED			BO		75	82	2	Yes
5683	Diff. prot.: IDIFF> L3 (without Tdelay) (Diff> L3)	Diff. Prot	OUT	*	ON OFF		*	LED			BO		75	83	2	Yes
5684	Diff. prot: IDIFF>> L1 (without Tdelay) (Diff>> L1)	Diff. Prot	OUT	*	ON OFF		*	LED			BO		75	84	2	Yes
5685	Diff. prot: IDIFF>> L2 (without Tdelay) (Diff>> L2)	Diff. Prot	OUT	*	ON OFF		*	LED			BO		75	85	2	Yes
5686	Diff. prot: IDIFF>> L3 (without Tdelay) (Diff>> L3)	Diff. Prot	OUT	*	ON OFF		*	LED			BO		75	86	2	Yes
5691	Differential prot.: TRIP by IDIFF> (Diff> TRIP)	Diff. Prot	OUT	*	ON		m	LED			BO		75	91	2	Yes
5692	Differential prot.: TRIP by IDIFF>> (Diff>> TRIP)	Diff. Prot	OUT	*	ON		m	LED			BO		75	92	2	Yes
5701	Diff. curr. in L1 at trip without Tdelay (Diff L1:)	Diff. Prot	VI	*	ON OFF								75	101	4	No
5702	Diff. curr. in L2 at trip without Tdelay (Diff L2:)	Diff. Prot	VI	*	ON OFF								75	102	4	No
5703	Diff. curr. in L3 at trip without Tdelay (Diff L3:)	Diff. Prot	VI	*	ON OFF								75	103	4	No
5704	Restr.curr. in L1 at trip without Tdelay (Res. L1:)	Diff. Prot	VI	*	ON OFF								75	104	4	No
5705	Restr.curr. in L2 at trip without Tdelay (Res. L2:)	Diff. Prot	VI	*	ON OFF								75	105	4	No
5706	Restr.curr. in L3 at trip without Tdelay (Res. L3:)	Diff. Prot	VI	*	ON OFF								75	106	4	No
5721	Diff. prot: Adaption factor CT I1 (Diff CT-I1:)	Diff. Prot	VI	ON OFF												
5722	Diff. prot: Adaption factor CT I2 (Diff CT-I2:)	Diff. Prot	VI	ON OFF												
5723	Diff. prot: Adaption factor CT I3 (Diff CT-I3:)	Diff. Prot	VI	ON OFF												
5724	Diff. prot: Adaption factor CT I4 (Diff CT-I4:)	Diff. Prot	VI	ON OFF												

No.	Description	Function	Type of Information	Log Buffers				Configurable in Matrix					IEC 60870-5-103			
				Event Log ON/OFF	Trip (Fault) Log On/Off	Ground Fault Log ON/OFF	Marked in Oscill. Record	LED	Binary Input	Function Key	Relay	Chatter Suppression	Type	Information Number	Data Unit	General Interrogation
5725	Diff. prot: Adaption factor CT I5 (Diff CT-I5:)	Diff. Prot	VI	ON OFF												
5726	Diff. prot: Adaption factor CT I6 (Diff CT-I6:)	Diff. Prot	VI	ON OFF												
5727	Diff. prot: Adaption factor CT I7 (Diff CT-I7:)	Diff. Prot	VI	ON OFF												
5728	Diff. prot: Adaption factor CT I8 (Diff CT-I8:)	Diff. Prot	VI	ON OFF												
5729	Diff. prot: Adaption factor CT I9 (Diff CT-I9:)	Diff. Prot	VI	ON OFF												
5730	Diff. prot: Adaption factor CT I10 (DiffCT-I10:)	Diff. Prot	VI	ON OFF												
5731	Diff. prot: Adaption factor CT I11 (DiffCT-I11:)	Diff. Prot	VI	ON OFF												
5732	Diff. prot: Adaption factor CT I12 (DiffCT-I12:)	Diff. Prot	VI	ON OFF												
5733	Diff. prot: Adaption factor CT M1 (Diff CT-M1:)	Diff. Prot	VI	ON OFF												
5734	Diff. prot: Adaption factor CT M2 (Diff CT-M2:)	Diff. Prot	VI	ON OFF												
5735	Diff. prot: Adaption factor CT M3 (Diff CT-M3:)	Diff. Prot	VI	ON OFF												
5736	Diff. prot: Adaption factor CT M4 (Diff CT-M4:)	Diff. Prot	VI	ON OFF												
5737	Diff. prot: Adaption factor CT M5 (Diff CT-M5:)	Diff. Prot	VI	ON OFF												
5738	Diff. prot: Adaption factor aux. CT IX1 (Diff CT-IX1:)	Diff. Prot	VI	ON OFF												
5739	Diff. prot: Adaption factor aux. CT IX2 (Diff CT-IX2:)	Diff. Prot	VI	ON OFF												
5740	Diff. prot: Adaption factor aux. CT IX3 (Diff CT-IX3:)	Diff. Prot	VI	ON OFF												
5741	Diff. prot: Adaption factor aux. CT IX4 (Diff CT-IX4:)	Diff. Prot	VI	ON OFF												
5742	Diff: DC L1 (Diff DC L1)	Diff. Prot	OUT	*	ON OFF		*	LED			BO					
5743	Diff: DC L2 (Diff DC L2)	Diff. Prot	OUT	*	ON OFF		*	LED			BO					
5744	Diff: DC L3 (Diff DC L3)	Diff. Prot	OUT	*	ON OFF		*	LED			BO					
5745	Diff: Increase of char. phase (DC) (Diff DC InCha)	Diff. Prot	OUT	*	ON OFF		*	LED			BO					
6851	>BLOCK Trip circuit supervision (>BLOCK TripC)	TripCirc.Superv	SP	*	*		*	LED	BI		BO					
6852	>Trip circuit supervision: trip relay (>TripC trip rel)	TripCirc.Superv	SP	ON OFF	*		*	LED	BI		BO		170	51	1	Yes
6853	>Trip circuit supervision: breaker relay (>TripC brk rel.)	TripCirc.Superv	SP	ON OFF	*		*	LED	BI		BO		170	52	1	Yes
6861	Trip circuit supervision OFF (TripC OFF)	TripCirc.Superv	OUT	ON OFF	*		*	LED			BO		170	53	1	Yes
6862	Trip circuit supervision is BLOCKED (TripC BLOCKED)	TripCirc.Superv	OUT	ON OFF	ON OFF		*	LED			BO		153	16	1	Yes
6863	Trip circuit supervision is ACTIVE (TripC ACTIVE)	TripCirc.Superv	OUT	ON OFF	*		*	LED			BO		153	17	1	Yes
6864	Trip Circuit blk. Bin. input is not set (TripC ProgFail)	TripCirc.Superv	OUT	ON OFF	*		*	LED			BO		170	54	1	Yes

No.	Description	Function	Type of Information	Log Buffers				Configurable in Matrix					IEC 60870-5-103			
				Event Log ON/OFF	Trip (Fault) Log On/Off	Ground Fault Log ON/OFF	Marked in Oscill. Record	LED	Binary Input	Function Key	Relay	Chatter Suppression	Type	Information Number	Data Unit	General Interrogation
6865	Failure Trip Circuit (FAIL: Trip cir.)	TripCirc.Superv	OUT	ON OFF	*		*	LED			BO		170	55	1	Yes
11001	>Reset MinMaxValues (>Reset MinMax)	Min/Max meter	SP	ON OFF	*		*	LED	BI		BO					
12006	>Frequency prot.: Block Stage f< (>Freq. f< blk)	Frequency Prot.	SP	ON OFF	ON OFF		*	LED	BI		BO		170	239	1	Yes
12007	>Frequency prot.: Block Stage f<< (>Freq. f<< blk)	Frequency Prot.	SP	ON OFF	ON OFF		*	LED	BI		BO		170	240	1	Yes
12008	>Frequency prot.: Block Stage f<<< (>Freq. f<<< blk)	Frequency Prot.	SP	ON OFF	ON OFF		*	LED	BI		BO		70	241	1	Yes
12009	>Frequency prot.: Block Stage f> (>Freq. f> blk)	Frequency Prot.	SP	ON OFF	ON OFF		*	LED	BI		BO		70	242	1	Yes
12032	Frequency prot.: Pick-up Stage f< (Freq. f< P-up)	Frequency Prot.	OUT	*	ON OFF		*	LED			BO		70	243	2	Yes
12033	Frequency prot.: Pick-up Stage f<< (Freq. f<< P-up)	Frequency Prot.	OUT	*	ON OFF		*	LED			BO		70	244	2	Yes
12034	Frequency prot.: Pick-up Stage f<<< (Freq. f<<< P-up)	Frequency Prot.	OUT	*	ON OFF		*	LED			BO		70	245	2	Yes
12035	Frequency prot.: Pick-up Stage f> (Freq. f> P-up)	Frequency Prot.	OUT	*	ON OFF		*	LED			BO		70	246	2	Yes
12036	Frequency prot.: Trip Stage f< (Freq. f< TRIP)	Frequency Prot.	OUT	*	ON		m	LED			BO		70	247	2	Yes
12037	Frequency prot.: Trip Stage f<< (Freq. f<< TRIP)	Frequency Prot.	OUT	*	ON		m	LED			BO		70	248	2	Yes
12038	Frequency prot.: Trip Stage f<<< (Freq. f<<< TRIP)	Frequency Prot.	OUT	*	ON		m	LED			BO		70	249	2	Yes
12039	Frequency prot.: Trip Stage f> (Freq. f> TRIP)	Frequency Prot.	OUT	*	ON		m	LED			BO		70	250	2	Yes
14101	Fail: RTD (broken wire/shorted) (Fail: RTD)	RTD-Box	OUT	ON OFF	*		*	LED			BO					
14111	Fail: RTD 1 (broken wire/shorted) (Fail: RTD 1)	RTD-Box	OUT	ON OFF	*		*	LED			BO					
14112	RTD 1 Temperature stage 1 picked up (RTD 1 St.1 p.up)	RTD-Box	OUT	ON OFF	*		*	LED			BO					
14113	RTD 1 Temperature stage 2 picked up (RTD 1 St.2 p.up)	RTD-Box	OUT	ON OFF	*		*	LED			BO					
14121	Fail: RTD 2 (broken wire/shorted) (Fail: RTD 2)	RTD-Box	OUT	ON OFF	*		*	LED			BO					
14122	RTD 2 Temperature stage 1 picked up (RTD 2 St.1 p.up)	RTD-Box	OUT	ON OFF	*		*	LED			BO					
14123	RTD 2 Temperature stage 2 picked up (RTD 2 St.2 p.up)	RTD-Box	OUT	ON OFF	*		*	LED			BO					
14131	Fail: RTD 3 (broken wire/shorted) (Fail: RTD 3)	RTD-Box	OUT	ON OFF	*		*	LED			BO					
14132	RTD 3 Temperature stage 1 picked up (RTD 3 St.1 p.up)	RTD-Box	OUT	ON OFF	*		*	LED			BO					
14133	RTD 3 Temperature stage 2 picked up (RTD 3 St.2 p.up)	RTD-Box	OUT	ON OFF	*		*	LED			BO					
14141	Fail: RTD 4 (broken wire/shorted) (Fail: RTD 4)	RTD-Box	OUT	ON OFF	*		*	LED			BO					
14142	RTD 4 Temperature stage 1 picked up (RTD 4 St.1 p.up)	RTD-Box	OUT	ON OFF	*		*	LED			BO					
14143	RTD 4 Temperature stage 2 picked up (RTD 4 St.2 p.up)	RTD-Box	OUT	ON OFF	*		*	LED			BO					
14151	Fail: RTD 5 (broken wire/shorted) (Fail: RTD 5)	RTD-Box	OUT	ON OFF	*		*	LED			BO					

No.	Description	Function	Type of Information	Log Buffers				Configurable in Matrix					IEC 60870-5-103			
				Event Log ON/OFF	Trip (Fault) Log On/Off	Ground Fault Log ON/OFF	Marked in Oscill. Record	LED	Binary Input	Function Key	Relay	Chatter Suppression	Type	Information Number	Data Unit	General Interrogation
14152	RTD 5 Temperature stage 1 picked up (RTD 5 St.1 p.up)	RTD-Box	OUT	ON OFF	*		*	LED			BO					
14153	RTD 5 Temperature stage 2 picked up (RTD 5 St.2 p.up)	RTD-Box	OUT	ON OFF	*		*	LED			BO					
14161	Fail: RTD 6 (broken wire/shorted) (Fail: RTD 6)	RTD-Box	OUT	ON OFF	*		*	LED			BO					
14162	RTD 6 Temperature stage 1 picked up (RTD 6 St.1 p.up)	RTD-Box	OUT	ON OFF	*		*	LED			BO					
14163	RTD 6 Temperature stage 2 picked up (RTD 6 St.2 p.up)	RTD-Box	OUT	ON OFF	*		*	LED			BO					
14171	Fail: RTD 7 (broken wire/shorted) (Fail: RTD 7)	RTD-Box	OUT	ON OFF	*		*	LED			BO					
14172	RTD 7 Temperature stage 1 picked up (RTD 7 St.1 p.up)	RTD-Box	OUT	ON OFF	*		*	LED			BO					
14173	RTD 7 Temperature stage 2 picked up (RTD 7 St.2 p.up)	RTD-Box	OUT	ON OFF	*		*	LED			BO					
14181	Fail: RTD 8 (broken wire/shorted) (Fail: RTD 8)	RTD-Box	OUT	ON OFF	*		*	LED			BO					
14182	RTD 8 Temperature stage 1 picked up (RTD 8 St.1 p.up)	RTD-Box	OUT	ON OFF	*		*	LED			BO					
14183	RTD 8 Temperature stage 2 picked up (RTD 8 St.2 p.up)	RTD-Box	OUT	ON OFF	*		*	LED			BO					
14191	Fail: RTD 9 (broken wire/shorted) (Fail: RTD 9)	RTD-Box	OUT	ON OFF	*		*	LED			BO					
14192	RTD 9 Temperature stage 1 picked up (RTD 9 St.1 p.up)	RTD-Box	OUT	ON OFF	*		*	LED			BO					
14193	RTD 9 Temperature stage 2 picked up (RTD 9 St.2 p.up)	RTD-Box	OUT	ON OFF	*		*	LED			BO					
14201	Fail: RTD10 (broken wire/shorted) (Fail: RTD10)	RTD-Box	OUT	ON OFF	*		*	LED			BO					
14202	RTD10 Temperature stage 1 picked up (RTD10 St.1 p.up)	RTD-Box	OUT	ON OFF	*		*	LED			BO					
14203	RTD10 Temperature stage 2 picked up (RTD10 St.2 p.up)	RTD-Box	OUT	ON OFF	*		*	LED			BO					
14211	Fail: RTD11 (broken wire/shorted) (Fail: RTD11)	RTD-Box	OUT	ON OFF	*		*	LED			BO					
14212	RTD11 Temperature stage 1 picked up (RTD11 St.1 p.up)	RTD-Box	OUT	ON OFF	*		*	LED			BO					
14213	RTD11 Temperature stage 2 picked up (RTD11 St.2 p.up)	RTD-Box	OUT	ON OFF	*		*	LED			BO					
14221	Fail: RTD12 (broken wire/shorted) (Fail: RTD12)	RTD-Box	OUT	ON OFF	*		*	LED			BO					
14222	RTD12 Temperature stage 1 picked up (RTD12 St.1 p.up)	RTD-Box	OUT	ON OFF	*		*	LED			BO					
14223	RTD12 Temperature stage 2 picked up (RTD12 St.2 p.up)	RTD-Box	OUT	ON OFF	*		*	LED			BO					
30053	Fault recording is running (Fault rec. run.)	Osc. Fault Rec.	OUT	*	*		*	LED			BO					
30054	Broken wire is switched OFF (Broken wire OFF)	Supervision	OUT	ON OFF	*		*	LED			BO					
30060	General: Adaption factor CT M1 (Gen CT-M1:)	P.System Data 2	VI	ON OFF												
30061	General: Adaption factor CT M2 (Gen CT-M2:)	P.System Data 2	VI	ON OFF												
30062	General: Adaption factor CT M3 (Gen CT-M3:)	P.System Data 2	VI	ON OFF												

No.	Description	Function	Type of Information	Log Buffers				Configurable in Matrix					IEC 60870-5-103			
				Event Log ON/OFF	Trip (Fault) Log On/Off	Ground Fault Log ON/OFF	Marked in Oscill. Record	LED	Binary Input	Function Key	Relay	Chatter Suppression	Type	Information Number	Data Unit	General Interrogation
30063	General: Adaption factor CT M4 (Gen CT-M4:)	P.System Data 2	VI	ON OFF												
30064	General: Adaption factor CT M5 (Gen CT-M5:)	P.System Data 2	VI	ON OFF												
30065	General: Adaption factor VT UL123 (Gen VT-U1:)	P.System Data 2	VI	ON OFF												
30067	parameter too low: (par too low:)	P.System Data 2	VI	ON OFF												
30068	parameter too high: (par too high:)	P.System Data 2	VI	ON OFF												
30069	setting fault: (settingFault:)	P.System Data 2	VI	ON OFF												
30070	Manual close signal meas.loc. 1 detected (Man.Clos.Det.M1)	P.System Data 2	OUT	ON	*		*	LED			BO					
30071	Manual close signal meas.loc. 2 detected (Man.Clos.Det.M2)	P.System Data 2	OUT	ON	*		*	LED			BO					
30072	Manual close signal meas.loc. 3 detected (Man.Clos.Det.M3)	P.System Data 2	OUT	ON	*		*	LED			BO					
30073	Manual close signal meas.loc. 4 detected (Man.Clos.Det.M4)	P.System Data 2	OUT	ON	*		*	LED			BO					
30074	Manual close signal meas.loc. 5 detected (Man.Clos.Det.M5)	P.System Data 2	OUT	ON	*		*	LED			BO					
30075	Manual close signal side 1 is detected (Man.Clos.Det.S1)	P.System Data 2	OUT	ON	*		*	LED			BO					
30076	Manual close signal side 2 is detected (Man.Clos.Det.S2)	P.System Data 2	OUT	ON	*		*	LED			BO					
30077	Manual close signal side 3 is detected (Man.Clos.Det.S3)	P.System Data 2	OUT	ON	*		*	LED			BO					
30078	Manual close signal side 4 is detected (Man.Clos.Det.S4)	P.System Data 2	OUT	ON	*		*	LED			BO					
30079	Manual close signal side 5 is detected (Man.Clos.Det.S5)	P.System Data 2	OUT	ON	*		*	LED			BO					
30080	Measurment location 1 is disconnected (M1 disconnected)	Discon.MeasLoc	OUT	ON OFF	*		*	LED			BO					
30081	Measurment location 2 is disconnected (M2 disconnected)	Discon.MeasLoc	OUT	ON OFF	*		*	LED			BO					
30082	Measurment location 3 is disconnected (M3 disconnected)	Discon.MeasLoc	OUT	ON OFF	*		*	LED			BO					
30083	Measurment location 4 is disconnected (M4 disconnected)	Discon.MeasLoc	OUT	ON OFF	*		*	LED			BO					
30084	Measurment location 5 is disconnected (M5 disconnected)	Discon.MeasLoc	OUT	ON OFF	*		*	LED			BO					
30085	End 1 is disconnected (I1 disconnected)	Discon.MeasLoc	OUT	ON OFF	*		*	LED			BO					
30086	End 2 is disconnected (I2 disconnected)	Discon.MeasLoc	OUT	ON OFF	*		*	LED			BO					
30087	End 3 is disconnected (I3 disconnected)	Discon.MeasLoc	OUT	ON OFF	*		*	LED			BO					
30088	End 4 is disconnected (I4 disconnected)	Discon.MeasLoc	OUT	ON OFF	*		*	LED			BO					
30089	End 5 is disconnected (I5 disconnected)	Discon.MeasLoc	OUT	ON OFF	*		*	LED			BO					
30090	End 6 is disconnected (I6 disconnected)	Discon.MeasLoc	OUT	ON OFF	*		*	LED			BO					
30091	End 7 is disconnected (I7 disconnected)	Discon.MeasLoc	OUT	ON OFF	*		*	LED			BO					

No.	Description	Function	Type of Information	Log Buffers				Configurable in Matrix					IEC 60870-5-103			
				Event Log ON/OFF	Trip (Fault) Log On/Off	Ground Fault Log ON/OFF	Marked in Oscill. Record	LED	Binary Input	Function Key	Relay	Chatter Suppression	Type	Information Number	Data Unit	General Interrogation
30092	End 8 is disconnected (I8 disconnected)	Discon.MeasLoc	OUT	ON OFF	*		*	LED			BO					
30093	End 9 is disconnected (I9 disconnected)	Discon.MeasLoc	OUT	ON OFF	*		*	LED			BO					
30094	End 10 is disconnected (I10disconnected)	Discon.MeasLoc	OUT	ON OFF	*		*	LED			BO					
30095	End 11 is disconnected (I11disconnected)	Discon.MeasLoc	OUT	ON OFF	*		*	LED			BO					
30096	End 12 is disconnected (I12disconnected)	Discon.MeasLoc	OUT	ON OFF	*		*	LED			BO					
30097	Err: inconsist. jumper/setting CT M1 (Err. IN CT M1)	Supervision	OUT	ON OFF	*		*	LED			BO					
30098	Err: inconsist. jumper/setting CT M2 (Err. IN CT M2)	Supervision	OUT	ON OFF	*		*	LED			BO					
30099	Err: inconsist. jumper/setting CT M3 (Err. IN CT M3)	Supervision	OUT	ON OFF	*		*	LED			BO					
30100	Err: inconsist. jumper/setting CT M4 (Err. IN CT M4)	Supervision	OUT	ON OFF	*		*	LED			BO					
30101	Err: inconsist. jumper/setting CT M5 (Err. IN CT M5)	Supervision	OUT	ON OFF	*		*	LED			BO					
30102	Err: inconsist. jumper/setting CT I1..3 (Err.IN CT1..3)	Supervision	OUT	ON OFF	*		*	LED			BO					
30103	Err: inconsist. jumper/setting CT I4..6 (Err.IN CT4..6)	Supervision	OUT	ON OFF	*		*	LED			BO					
30104	Err: inconsist. jumper/setting CT I7..9 (Err.IN CT7..9)	Supervision	OUT	ON OFF	*		*	LED			BO					
30105	Err:inconsist. jumper/setting CT I10..12 (Err.IN CT10..12)	Supervision	OUT	ON OFF	*		*	LED			BO					
30106	Err: inconsist. jumper/setting CT IX1 (Err. IN CT IX1)	Supervision	OUT	ON OFF	*		*	LED			BO					
30107	Err: inconsist. jumper/setting CT IX2 (Err. IN CT IX2)	Supervision	OUT	ON OFF	*		*	LED			BO					
30108	Err: inconsist. jumper/setting CT IX3 (Err. IN CT IX3)	Supervision	OUT	ON OFF	*		*	LED			BO					
30109	Err: inconsist. jumper/setting CT IX4 (Err. IN CT IX4)	Supervision	OUT	ON OFF	*		*	LED			BO					
30110	Fail.: Current Balance meas. location 1 (Fail balan. IM1)	Measurem.Superv	OUT	ON OFF	*		*	LED			BO					
30111	Fail.: Current Balance meas. location 2 (Fail balan. IM2)	Measurem.Superv	OUT	ON OFF	*		*	LED			BO					
30112	Fail.: Current Balance meas. location 3 (Fail balan. IM3)	Measurem.Superv	OUT	ON OFF	*		*	LED			BO					
30113	Fail.: Current Balance meas. location 4 (Fail balan. IM4)	Measurem.Superv	OUT	ON OFF	*		*	LED			BO					
30114	Fail.: Current Balance meas. location 5 (Fail balan. IM5)	Measurem.Superv	OUT	ON OFF	*		*	LED			BO					
30115	Failure: Phase Sequence I meas. loc. 1 (FailPh.Seq IM1)	Measurem.Superv	OUT	ON OFF	*		*	LED			BO					
30116	Failure: Phase Sequence I meas. loc. 2 (FailPh.Seq IM2)	Measurem.Superv	OUT	ON OFF	*		*	LED			BO					
30117	Failure: Phase Sequence I meas. loc. 3 (FailPh.Seq IM3)	Measurem.Superv	OUT	ON OFF	*		*	LED			BO					
30118	Failure: Phase Sequence I meas. loc. 4 (FailPh.Seq IM4)	Measurem.Superv	OUT	ON OFF	*		*	LED			BO					
30119	Failure: Phase Sequence I meas. loc. 5 (FailPh.Seq IM5)	Measurem.Superv	OUT	ON OFF	*		*	LED			BO					

No.	Description	Function	Type of Information	Log Buffers				Configurable in Matrix					IEC 60870-5-103			
				Event Log ON/OFF	Trip (Fault) Log On/Off	Ground Fault Log ON/OFF	Marked in Oscill. Record	LED	Binary Input	Function Key	Relay	Chatter Suppression	Type	Information Number	Data Unit	General Interrogation
30120	Broken wire IL1 measurement location 1 (brk. wire IL1M1)	Supervision	OUT	ON OFF	*		*	LED			BO					
30121	Broken wire IL2 measurement location 1 (brk. wire IL2M1)	Supervision	OUT	ON OFF	*		*	LED			BO					
30122	Broken wire IL3 measurement location 1 (brk. wire IL3M1)	Supervision	OUT	ON OFF	*		*	LED			BO					
30123	Broken wire IL1 measurement location 2 (brk. wire IL1M2)	Supervision	OUT	ON OFF	*		*	LED			BO					
30124	Broken wire IL2 measurement location 2 (brk. wire IL2M2)	Supervision	OUT	ON OFF	*		*	LED			BO					
30125	Broken wire IL3 measurement location 2 (brk. wire IL3M2)	Supervision	OUT	ON OFF	*		*	LED			BO					
30126	Broken wire IL1 measurement location 3 (brk. wire IL1M3)	Supervision	OUT	ON OFF	*		*	LED			BO					
30127	Broken wire IL2 measurement location 3 (brk. wire IL2M3)	Supervision	OUT	ON OFF	*		*	LED			BO					
30128	Broken wire IL3 measurement location 3 (brk. wire IL3M3)	Supervision	OUT	ON OFF	*		*	LED			BO					
30129	Broken wire IL1 measurement location 4 (brk. wire IL1M4)	Supervision	OUT	ON OFF	*		*	LED			BO					
30130	Broken wire IL2 measurement location 4 (brk. wire IL2M4)	Supervision	OUT	ON OFF	*		*	LED			BO					
30131	Broken wire IL3 measurement location 4 (brk. wire IL3M4)	Supervision	OUT	ON OFF	*		*	LED			BO					
30132	Broken wire IL1 measurement location 5 (brk. wire IL1M5)	Supervision	OUT	ON OFF	*		*	LED			BO					
30133	Broken wire IL2 measurement location 5 (brk. wire IL2M5)	Supervision	OUT	ON OFF	*		*	LED			BO					
30134	Broken wire IL3 measurement location 5 (brk. wire IL3M5)	Supervision	OUT	ON OFF	*		*	LED			BO					
30135	Incons. M1: CBaux open/ curr. persistent (Incons.CBaux M1)	Supervision	OUT	ON OFF	*		*	LED			BO					
30136	Incons. M2: CBaux open/ curr. persistent (Incons.CBaux M2)	Supervision	OUT	ON OFF	*		*	LED			BO					
30137	Incons. M3: CBaux open/ curr. persistent (Incons.CBaux M3)	Supervision	OUT	ON OFF	*		*	LED			BO					
30138	Incons. M4: CBaux open/ curr. persistent (Incons.CBaux M4)	Supervision	OUT	ON OFF	*		*	LED			BO					
30139	Incons. M5: CBaux open/ curr. persistent (Incons.CBaux M5)	Supervision	OUT	ON OFF	*		*	LED			BO					
30140	Incons. S1: CBaux open/ curr. persistent (Incons.CBaux S1)	Supervision	OUT	ON OFF	*		*	LED			BO					
30141	Incons. S2: CBaux open/ curr. persistent (Incons.CBaux S2)	Supervision	OUT	ON OFF	*		*	LED			BO					
30142	Incons. S3: CBaux open/ curr. persistent (Incons.CBaux S3)	Supervision	OUT	ON OFF	*		*	LED			BO					
30143	Incons. S4: CBaux open/ curr. persistent (Incons.CBaux S4)	Supervision	OUT	ON OFF	*		*	LED			BO					
30144	Incons. S5: CBaux open/ curr. persistent (Incons.CBaux S5)	Supervision	OUT	ON OFF	*		*	LED			BO					
30145	Failure: disconnect measurment location (Fail.Disconnect)	Supervision	OUT	ON OFF	*		*	LED			BO					
30251	Primary fault current IL1 meas. loc. 1 (IL1M1:)	P.System Data 2	VI	*	*											
30252	Primary fault current IL2 meas. loc. 1 (IL2M1:)	P.System Data 2	VI	*	*											

No.	Description	Function	Type of Information	Log Buffers				Configurable in Matrix					IEC 60870-5-103			
				Event Log ON/OFF	Trip (Fault) Log On/Off	Ground Fault Log ON/OFF	Marked in Oscill. Record	LED	Binary Input	Function Key	Relay	Chatter Suppression	Type	Information Number	Data Unit	General Interrogation
30253	Primary fault current IL3 meas. loc. 1 (IL3M1:)	P.System Data 2	VI	*	*											
30254	Primary fault current IL1 meas. loc. 2 (IL1M2:)	P.System Data 2	VI	*	*											
30255	Primary fault current IL2 meas. loc. 2 (IL2M2:)	P.System Data 2	VI	*	*											
30256	Primary fault current IL3 meas. loc. 2 (IL3M2:)	P.System Data 2	VI	*	*											
30257	Primary fault current IL1 meas. loc. 3 (IL1M3:)	P.System Data 2	VI	*	*											
30258	Primary fault current IL2 meas. loc. 3 (IL2M3:)	P.System Data 2	VI	*	*											
30259	Primary fault current IL3 meas. loc. 3 (IL3M3:)	P.System Data 2	VI	*	*											
30260	Primary fault current IL1 meas. loc. 4 (IL1M4:)	P.System Data 2	VI	*	*											
30261	Primary fault current IL2 meas. loc. 4 (IL2M4:)	P.System Data 2	VI	*	*											
30262	Primary fault current IL3 meas. loc. 4 (IL3M4:)	P.System Data 2	VI	*	*											
30263	Primary fault current IL1 meas. loc. 5 (IL1M5:)	P.System Data 2	VI	*	*											
30264	Primary fault current IL2 meas. loc. 5 (IL2M5:)	P.System Data 2	VI	*	*											
30265	Primary fault current IL3 meas. loc. 5 (IL3M5:)	P.System Data 2	VI	*	*											
30266	Primary fault current IL1 side3 (IL1S3:)	P.System Data 2	VI	*	*											
30267	Primary fault current IL2 side3 (IL2S3:)	P.System Data 2	VI	*	*											
30268	Primary fault current IL3 side3 (IL3S3:)	P.System Data 2	VI	*	*											
30269	Primary fault current IL1 side4 (IL1S4:)	P.System Data 2	VI	*	*											
30270	Primary fault current IL2 side4 (IL2S4:)	P.System Data 2	VI	*	*											
30271	Primary fault current IL3 side4 (IL3S4:)	P.System Data 2	VI	*	*											
30272	Primary fault current IL1 side5 (IL1S5:)	P.System Data 2	VI	*	*											
30273	Primary fault current IL2 side5 (IL2S5:)	P.System Data 2	VI	*	*											
30274	Primary fault current IL3 side5 (IL3S5:)	P.System Data 2	VI	*	*											
30275	Primary fault current I8 (I8:)	P.System Data 2	VI	*	*											
30276	Primary fault current I9 (I9:)	P.System Data 2	VI	*	*											
30277	Primary fault current I10 (I10:)	P.System Data 2	VI	*	*											
30278	Primary fault current I11 (I11:)	P.System Data 2	VI	*	*											
30279	Primary fault current I12 (I12:)	P.System Data 2	VI	*	*											
30351	>Manual close signal measurement loc. 1 (>ManualClose M1)	P.System Data 2	SP	*	*		*	LED	BI		BO					
30352	>Manual close signal measurement loc. 2 (>ManualClose M2)	P.System Data 2	SP	*	*		*	LED	BI		BO					
30353	>Manual close signal measurement loc. 3 (>ManualClose M3)	P.System Data 2	SP	*	*		*	LED	BI		BO					

No.	Description	Function	Type of Information	Log Buffers				Configurable in Matrix					IEC 60870-5-103			
				Event Log ON/OFF	Trip (Fault) Log On/Off	Ground Fault Log ON/OFF	Marked in Oscill. Record	LED	Binary Input	Function Key	Relay	Chatter Suppression	Type	Information Number	Data Unit	General Interrogation
30354	>Manual close signal measurement loc. 4 (>ManualClose M4)	P.System Data 2	SP	*	*		*	LED	BI		BO					
30355	>Manual close signal measurement loc. 5 (>ManualClose M5)	P.System Data 2	SP	*	*		*	LED	BI		BO					
30356	>Manual close signal side 1 (>ManualClose S1)	P.System Data 2	SP	*	*		*	LED	BI		BO					
30357	>Manual close signal side 2 (>ManualClose S2)	P.System Data 2	SP	*	*		*	LED	BI		BO					
30358	>Manual close signal side 3 (>ManualClose S3)	P.System Data 2	SP	*	*		*	LED	BI		BO					
30359	>Manual close signal side 4 (>ManualClose S4)	P.System Data 2	SP	*	*		*	LED	BI		BO					
30360	>Manual close signal side 5 (>ManualClose S5)	P.System Data 2	SP	*	*		*	LED	BI		BO					
30361	>disconnect without test: current = 0 (>disconn. I>=0)	Discon.MeasLoc	SP	ON OFF	*		*	LED	BI		BO					
30362	>disconnect measurment location 1 (>disconnect M1)	Discon.MeasLoc	SP	ON OFF	*		*	LED	BI		BO					
30363	>disconnect measurment location 2 (>disconnect M2)	Discon.MeasLoc	SP	ON OFF	*		*	LED	BI		BO					
30364	>disconnect measurment location 3 (>disconnect M3)	Discon.MeasLoc	SP	ON OFF	*		*	LED	BI		BO					
30365	>disconnect measurment location 4 (>disconnect M4)	Discon.MeasLoc	SP	ON OFF	*		*	LED	BI		BO					
30366	>disconnect measurment location 5 (>disconnect M5)	Discon.MeasLoc	SP	ON OFF	*		*	LED	BI		BO					
30367	>disconnect end 1 (>disconnect I1)	Discon.MeasLoc	SP	ON OFF	*		*	LED	BI		BO					
30368	>disconnect end 2 (>disconnect I2)	Discon.MeasLoc	SP	ON OFF	*		*	LED	BI		BO					
30369	>disconnect end 3 (>disconnect I3)	Discon.MeasLoc	SP	ON OFF	*		*	LED	BI		BO					
30370	>disconnect end 4 (>disconnect I4)	Discon.MeasLoc	SP	ON OFF	*		*	LED	BI		BO					
30371	>disconnect end 5 (>disconnect I5)	Discon.MeasLoc	SP	ON OFF	*		*	LED	BI		BO					
30372	>disconnect end 6 (>disconnect I6)	Discon.MeasLoc	SP	ON OFF	*		*	LED	BI		BO					
30373	>disconnect end 7 (>disconnect I7)	Discon.MeasLoc	SP	ON OFF	*		*	LED	BI		BO					
30374	>disconnect end 8 (>disconnect I8)	Discon.MeasLoc	SP	ON OFF	*		*	LED	BI		BO					
30375	>disconnect end 9 (>disconnect I9)	Discon.MeasLoc	SP	ON OFF	*		*	LED	BI		BO					
30376	>disconnect end 10 (>disconnect I10)	Discon.MeasLoc	SP	ON OFF	*		*	LED	BI		BO					
30377	>disconnect end 11 (>disconnect I11)	Discon.MeasLoc	SP	ON OFF	*		*	LED	BI		BO					
30378	>disconnect end 12 (>disconnect I12)	Discon.MeasLoc	SP	ON OFF	*		*	LED	BI		BO					
30607	Accumulation of interrupted curr. L1 S1 (ΣIL1S1:)	Statistics	VI													
30608	Accumulation of interrupted curr. L2 S1 (ΣIL2S1:)	Statistics	VI													
30609	Accumulation of interrupted curr. L3 S1 (ΣIL3S1:)	Statistics	VI													

No.	Description	Function	Type of Information	Log Buffers				Configurable in Matrix					IEC 60870-5-103			
				Event Log ON/OFF	Trip (Fault) Log On/Off	Ground Fault Log ON/OFF	Marked in Oscill. Record	LED	Binary Input	Function Key	Relay	Chatter Suppression	Type	Information Number	Data Unit	General Interrogation
30610	Accumulation of interrupted curr. L1 S2 (ΣIL1S2:)	Statistics	VI													
30611	Accumulation of interrupted curr. L2 S2 (ΣIL2S2:)	Statistics	VI													
30612	Accumulation of interrupted curr. L3 S2 (ΣIL3S2:)	Statistics	VI													
30620	Accumulation of interrupted curr. I1 (ΣI1:)	Statistics	VI													
30621	Accumulation of interrupted curr. I2 (ΣI2:)	Statistics	VI													
30622	Accumulation of interrupted curr. I3 (ΣI3:)	Statistics	VI													
30623	Accumulation of interrupted curr. I4 (ΣI4:)	Statistics	VI													
30624	Accumulation of interrupted curr. I5 (ΣI5:)	Statistics	VI													
30625	Accumulation of interrupted curr. I6 (ΣI6:)	Statistics	VI													
30626	Accumulation of interrupted curr. I7 (ΣI7:)	Statistics	VI													
30763	Accumulation of interrupted curr. L1 M1 (ΣIL1M1:)	Statistics	VI													
30764	Accumulation of interrupted curr. L2 M1 (ΣIL2M1:)	Statistics	VI													
30765	Accumulation of interrupted curr. L3 M1 (ΣIL3M1:)	Statistics	VI													
30766	Accumulation of interrupted curr. L1 M2 (ΣIL1M2:)	Statistics	VI													
30767	Accumulation of interrupted curr. L2 M2 (ΣIL2M2:)	Statistics	VI													
30768	Accumulation of interrupted curr. L3 M2 (ΣIL3M2:)	Statistics	VI													
30769	Accumulation of interrupted curr. L1 M3 (ΣIL1M3:)	Statistics	VI													
30770	Accumulation of interrupted curr. L2 M3 (ΣIL2M3:)	Statistics	VI													
30771	Accumulation of interrupted curr. L3 M3 (ΣIL3M3:)	Statistics	VI													
30772	Accumulation of interrupted curr. L1 M4 (ΣIL1M4:)	Statistics	VI													
30773	Accumulation of interrupted curr. L2 M4 (ΣIL2M4:)	Statistics	VI													
30774	Accumulation of interrupted curr. L3 M4 (ΣIL3M4:)	Statistics	VI													
30775	Accumulation of interrupted curr. L1 M5 (ΣIL1M5:)	Statistics	VI													
30776	Accumulation of interrupted curr. L2 M5 (ΣIL2M5:)	Statistics	VI													
30777	Accumulation of interrupted curr. L3 M5 (ΣIL3M5:)	Statistics	VI													
30778	Accumulation of interrupted curr. L1 S3 (ΣIL1S3:)	Statistics	VI													
30779	Accumulation of interrupted curr. L2 S3 (ΣIL2S3:)	Statistics	VI													
30780	Accumulation of interrupted curr. L3 S3 (ΣIL3S3:)	Statistics	VI													

No.	Description	Function	Type of Information	Log Buffers				Configurable in Matrix					IEC 60870-5-103			
				Event Log ON/OFF	Trip (Fault) Log On/Off	Ground Fault Log ON/OFF	Marked in Oscill. Record	LED	Binary Input	Function Key	Relay	Chatter Suppression	Type	Information Number	Data Unit	General Interrogation
30781	Accumulation of interrupted curr. L1 S4 (ΣIL1S4:)	Statistics	VI													
30782	Accumulation of interrupted curr. L2 S4 (ΣIL2S4:)	Statistics	VI													
30783	Accumulation of interrupted curr. L3 S4 (ΣIL3S4:)	Statistics	VI													
30784	Accumulation of interrupted curr. L1 S5 (ΣIL1S5:)	Statistics	VI													
30785	Accumulation of interrupted curr. L2 S5 (ΣIL2S5:)	Statistics	VI													
30786	Accumulation of interrupted curr. L3 S5 (ΣIL3S5:)	Statistics	VI													
30787	Accumulation of interrupted curr. I8 (ΣI8:)	Statistics	VI													
30788	Accumulation of interrupted curr. I9 (ΣI9:)	Statistics	VI													
30789	Accumulation of interrupted curr. I10 (ΣI10:)	Statistics	VI													
30790	Accumulation of interrupted curr. I11 (ΣI11:)	Statistics	VI													
30791	Accumulation of interrupted curr. I12 (ΣI12:)	Statistics	VI													
31000	Q0 operationcounter= (Q0 OpCnt=)	Control Device	VI													

A.10 Group Alarms

No.	Description	Function No.	Description
140	Error Sum Alarm	181 264 267 251 30145	Error MeasurSys Fail: RTD-Box 1 Fail: RTD-Box 2 Broken wire Fail.Disconnect
160	Alarm Sum Event	161 164 171 193 177 198 199 200 68 30135 30136 30137 30138 30139 30140 30141 30142 30143 30144	Fail I Superv. Fail U Superv. Fail Ph. Seq. Alarm adjustm. Fail Battery Err. Module B Err. Module C Err. Module D Clock SyncError Incons.CBaux M1 Incons.CBaux M2 Incons.CBaux M3 Incons.CBaux M4 Incons.CBaux M5 Incons.CBaux S1 Incons.CBaux S2 Incons.CBaux S3 Incons.CBaux S4 Incons.CBaux S5
161	Fail I Superv.	163	Fail I balance
163	Fail I balance	30110 30111 30112 30113 30114	Fail balan. IM1 Fail balan. IM2 Fail balan. IM3 Fail balan. IM4 Fail balan. IM5
171	Fail Ph. Seq.	175 176	Fail Ph. Seq. I Fail Ph. Seq. U
175	Fail Ph. Seq. I	30115 30116 30117 30118 30119	FailPh.Seq IM1 FailPh.Seq IM2 FailPh.Seq IM3 FailPh.Seq IM4 FailPh.Seq IM5
176	Fail Ph. Seq. U	176	Fail Ph. Seq. U

No.	Description	Function No.	Description
181	Error MeasurSys	190	Error Board 0
		183	Error Board 1
		184	Error Board 2
		185	Error Board 3
		186	Error Board 4
		187	Error Board 5
		188	Error Board 6
		189	Error Board 7
		192	Error1A/5Awrong
		191	Error Offset
192	Error1A/5Awrong	30097	Err. IN CT M1
		30098	Err. IN CT M2
		30099	Err. IN CT M3
		30100	Err. IN CT M4
		30101	Err. IN CT M5
		30102	Err.IN CT1..3
		30103	Err.IN CT4..6
		30104	Err.IN CT7..9
		30105	Err.IN CT10..12
		30106	Err. IN CT IX1
		30107	Err. IN CT IX2
		30108	Err. IN CT IX3
		30109	Err. IN CT IX4

A.11 Measured Values

No.	Description	Function	IEC 60870-5-103					Configurable in Matrix		
			Type	Information Number	Compatibility	Data Unit	Position	CFC	Control Display	Default Display
-	Control DIGSI (CntrlDIGSI)	Cntrl Authority	-	-	-	-	-		CD	DD
-	Operating hours greater than (OpHour>)	SetPoint(Stat)	-	-	-	-	-		CD	DD
044.2611	Temperat. rise for warning and trip (Θ/Θtrip =)	Meas. Thermal	-	-	-	-	-	CFC	CD	DD
044.2612	Temperature rise for phase L1 (Θ/ΘtripL1=)	Meas. Thermal	-	-	-	-	-	CFC	CD	DD
044.2613	Temperature rise for phase L2 (Θ/ΘtripL2=)	Meas. Thermal	-	-	-	-	-	CFC	CD	DD
044.2614	Temperature rise for phase L3 (Θ/ΘtripL3=)	Meas. Thermal	-	-	-	-	-	CFC	CD	DD
044.2615	Hot spot temperature of leg L1 (Θ leg L1=)	Meas. Thermal	-	-	-	-	-	CFC	CD	DD
044.2616	Hot spot temperature of leg L2 (Θ leg L2=)	Meas. Thermal	-	-	-	-	-	CFC	CD	DD
044.2617	Hot spot temperature of leg L3 (Θ leg L3=)	Meas. Thermal	-	-	-	-	-	CFC	CD	DD
044.2618	Hot spot temperature of leg L12 (Θ leg L12=)	Meas. Thermal	-	-	-	-	-	CFC	CD	DD
044.2619	Hot spot temperature of leg L23 (Θ leg L23=)	Meas. Thermal	-	-	-	-	-	CFC	CD	DD
044.2620	Hot spot temperature of leg L31 (Θ leg L31=)	Meas. Thermal	-	-	-	-	-	CFC	CD	DD
044.2621	Aging Rate (Ag.Rate=)	Meas. Thermal	-	-	-	-	-	CFC	CD	DD
044.2622	Load Reserve to warning level (ResWARN=)	Meas. Thermal	-	-	-	-	-	CFC	CD	DD
044.2623	Load Reserve to alarm level (ResALARM=)	Meas. Thermal	-	-	-	-	-	CFC	CD	DD
199.2640	Idiff REF (I/Inominal object [%]) (IdiffREF=)	Meas. Dif/Rest.	-	-	-	-	-	CFC	CD	DD
199.2641	Irest REF (I/Inominal object [%]) (IrestREF=)	Meas. Dif/Rest.	-	-	-	-	-	CFC	CD	DD
204.2611	O/L2 Temperat. rise for warning and trip (2Θ/Θtrip =)	Meas. Thermal	-	-	-	-	-	CFC	CD	DD
204.2612	Th. O/L 2 Temperature rise for phase L1 (2Θ/ΘtrpL1=)	Meas. Thermal	-	-	-	-	-	CFC	CD	DD
204.2613	Th. O/L 2 Temperature rise for phase L2 (2Θ/ΘtrpL2=)	Meas. Thermal	-	-	-	-	-	CFC	CD	DD
204.2614	Th. O/L 2 Temperature rise for phase L3 (2Θ/ΘtrpL3=)	Meas. Thermal	-	-	-	-	-	CFC	CD	DD
204.2615	Th. O/L 2 Hot spot temperature of leg L1 (2Θ leg L1=)	Meas. Thermal	-	-	-	-	-	CFC	CD	DD
204.2616	Th. O/L 2 Hot spot temperature of leg L2 (2Θ leg L2=)	Meas. Thermal	-	-	-	-	-	CFC	CD	DD
204.2617	Th. O/L 2 Hot spot temperature of leg L3 (2Θ leg L3=)	Meas. Thermal	-	-	-	-	-	CFC	CD	DD
204.2618	Th. O/L2 Hot spot temperature of leg L12 (2Θ legL12=)	Meas. Thermal	-	-	-	-	-	CFC	CD	DD
204.2619	Th. O/L2 Hot spot temperature of leg L23 (2Θ legL23=)	Meas. Thermal	-	-	-	-	-	CFC	CD	DD
204.2620	Th. O/L2 Hot spot temperature of leg L31 (2Θ legL31=)	Meas. Thermal	-	-	-	-	-	CFC	CD	DD
204.2621	Thermal Overload 2 Aging Rate (Ag.Rate2=)	Meas. Thermal	-	-	-	-	-	CFC	CD	DD
204.2622	Th. O/L 2 Load Reserve to warning level (ResWARN2=)	Meas. Thermal	-	-	-	-	-	CFC	CD	DD
204.2623	Th. O/L 2 Load Reserve to alarm level (ResALARM2=)	Meas. Thermal	-	-	-	-	-	CFC	CD	DD
205.2640	Idiff REF2 (I/Inominal object [%]) (IdiffRE2=)	Meas. Dif/Rest.	-	-	-	-	-	CFC	CD	DD
205.2641	Irest REF2 (I/Inominal object [%]) (IrestRE2=)	Meas. Dif/Rest.	-	-	-	-	-	CFC	CD	DD
328.2711	Minimum Value $00 ($00min=)	addMV	-	-	-	-	-	CFC	CD	DD
328.2712	Maximum value $00 ($00max=)	addMV	-	-	-	-	-	CFC	CD	DD
328.2713	long term average value $00 ($00ave=)	addMV	-	-	-	-	-	CFC	CD	DD

No.	Description	Function	IEC 60870-5-103					Configurable in Matrix		
			Type	Information Number	Compatibility	Data Unit	Position	CFC	Control Display	Default Display
328.2714	Min. of average value $00 ($00amin=)	addMV	-	-	-	-	-	CFC	CD	DD
328.2715	Max. of average value $00 ($00amax=)	addMV	-	-	-	-	-	CFC	CD	DD
621	U L1-E (UL1E=)	Measurement	-	-	-	-	-	CFC	CD	DD
622	U L2-E (UL2E=)	Measurement	-	-	-	-	-	CFC	CD	DD
623	U L3-E (UL3E=)	Measurement	-	-	-	-	-	CFC	CD	DD
624	U L12 (UL12=)	Measurement	-	-	-	-	-	CFC	CD	DD
625	U L23 (UL23=)	Measurement	-	-	-	-	-	CFC	CD	DD
626	U L31 (UL31=)	Measurement	-	-	-	-	-	CFC	CD	DD
627	Displacement voltage UE (UE =)	Measurement	-	-	-	-	-	CFC	CD	DD
629	U1 (positive sequence) (U1 =)	Measurement	-	-	-	-	-	CFC	CD	DD
630	U2 (negative sequence) (U2 =)	Measurement	-	-	-	-	-	CFC	CD	DD
641	P (active power) (P =)	Measurement	-	-	-	-	-	CFC	CD	DD
642	Q (reactive power) (Q =)	Measurement	-	-	-	-	-	CFC	CD	DD
644	Frequency (Freq=)	Measurement	-	-	-	-	-	CFC	CD	DD
645	S (apparent power) (S =)	Measurement	-	-	-	-	-	CFC	CD	DD
721	Operat. meas. current IL1 side 1 (IL1S1=)	Measurement	134	139	No	9	1	CFC	CD	DD
722	Operat. meas. current IL2 side 1 (IL2S1=)	Measurement	134	139	No	9	5	CFC	CD	DD
723	Operat. meas. current IL3 side 1 (IL3S1=)	Measurement	134	139	No	9	3	CFC	CD	DD
724	Operat. meas. current IL1 side 2 (IL1S2=)	Measurement	134	139	No	9	2	CFC	CD	DD
725	Operat. meas. current IL2 side 2 (IL2S2=)	Measurement	134	139	No	9	6	CFC	CD	DD
726	Operat. meas. current IL3 side 2 (IL3S2=)	Measurement	134	139	No	9	4	CFC	CD	DD
727	Operat. meas. current IL1 side 3 (IL1S3=)	Measurement	-	-	-	-	-	CFC	CD	DD
728	Operat. meas. current IL2 side 3 (IL2S3=)	Measurement	-	-	-	-	-	CFC	CD	DD
729	Operat. meas. current IL3 side 3 (IL3S3=)	Measurement	-	-	-	-	-	CFC	CD	DD
765	(U/Un) / (f/fn) (U/f =)	Measurement	-	-	-	-	-	CFC	CD	DD
766	Calculated temperature (U/f) (U/f th. =)	Meas. Thermal	-	-	-	-	-	CFC	CD	DD
888	Pulsed Energy Wp (active) (Wp(puls)=)	Energy	133	55	No	205	-		CD	DD
889	Pulsed Energy Wq (reactive) (Wq(puls)=)	Energy	133	56	No	205	-		CD	DD
901	Power Factor (PF =)	Measurement	-	-	-	-	-	CFC	CD	DD
910	Calculated rotor temp. (unbal. load) (Therm-Rep.=)	Meas. Thermal	-	-	-	-	-	CFC	CD	DD
924	Wp Forward (Wp+=)	Energy	133	51	No	205	-		CD	DD
925	Wq Forward (Wq+=)	Energy	133	52	No	205	-		CD	DD
928	Wp Reverse (Wp-=)	Energy	133	53	No	205	-		CD	DD
929	Wq Reverse (Wq-=)	Energy	133	54	No	205	-		CD	DD
1068	Temperature of RTD 1 (Θ RTD 1 =)	Meas. Thermal	134	146	No	9	1	CFC	CD	DD
1069	Temperature of RTD 2 (Θ RTD 2 =)	Meas. Thermal	134	146	No	9	2	CFC	CD	DD
1070	Temperature of RTD 3 (Θ RTD 3 =)	Meas. Thermal	134	146	No	9	3	CFC	CD	DD
1071	Temperature of RTD 4 (Θ RTD 4 =)	Meas. Thermal	134	146	No	9	4	CFC	CD	DD
1072	Temperature of RTD 5 (Θ RTD 5 =)	Meas. Thermal	134	146	No	9	5	CFC	CD	DD
1073	Temperature of RTD 6 (Θ RTD 6 =)	Meas. Thermal	134	146	No	9	6	CFC	CD	DD
1074	Temperature of RTD 7 (Θ RTD 7 =)	Meas. Thermal	134	146	No	9	7	CFC	CD	DD
1075	Temperature of RTD 8 (Θ RTD 8 =)	Meas. Thermal	134	146	No	9	8	CFC	CD	DD
1076	Temperature of RTD 9 (Θ RTD 9 =)	Meas. Thermal	134	146	No	9	9	CFC	CD	DD
1077	Temperature of RTD10 (Θ RTD10 =)	Meas. Thermal	134	146	No	9	10	CFC	CD	DD
1078	Temperature of RTD11 (Θ RTD11 =)	Meas. Thermal	134	146	No	9	11	CFC	CD	DD
1079	Temperature of RTD12 (Θ RTD12 =)	Meas. Thermal	134	146	No	9	12	CFC	CD	DD
7742	IDiffL1(I/Inominal object [%]) (IDiffL1=)	Meas. Dif/Rest.	-	-	-	-	-	CFC	CD	DD
7743	IDiffL2(I/Inominal object [%]) (IDiffL2=)	Meas. Dif/Rest.	-	-	-	-	-	CFC	CD	DD

No.	Description	Function	IEC 60870-5-103					Configurable in Matrix		
			Type	Information Number	Compatibility	Data Unit	Position	CFC	Control Display	Default Display
7744	IDiffL3(I/Inominal object [%]) (IDiffL3=)	Meas. Dif/Rest.	-	-	-	-	-	CFC	CD	DD
7745	IRestL1(I/Inominal object [%]) (IRestL1=)	Meas. Dif/Rest.	-	-	-	-	-	CFC	CD	DD
7746	IRestL2(I/Inominal object [%]) (IRestL2=)	Meas. Dif/Rest.	-	-	-	-	-	CFC	CD	DD
7747	IRestL3(I/Inominal object [%]) (IRestL3=)	Meas. Dif/Rest.	-	-	-	-	-	CFC	CD	DD
30633	Phase angle of current I1 (φI1=)	Measurement	-	-	-	-	-	CFC	CD	DD
30634	Phase angle of current I2 (φI2=)	Measurement	-	-	-	-	-	CFC	CD	DD
30635	Phase angle of current I3 (φI3=)	Measurement	-	-	-	-	-	CFC	CD	DD
30636	Phase angle of current I4 (φI4=)	Measurement	-	-	-	-	-	CFC	CD	DD
30637	Phase angle of current I5 (φI5=)	Measurement	-	-	-	-	-	CFC	CD	DD
30638	Phase angle of current I6 (φI6=)	Measurement	-	-	-	-	-	CFC	CD	DD
30639	Phase angle of current I7 (φI7=)	Measurement	-	-	-	-	-	CFC	CD	DD
30640	3I0 (zero sequence) of side 1 (3I0S1=)	Measurement	-	-	-	-	-	CFC	CD	DD
30641	I1 (positive sequence) of side 1 (I1S1=)	Measurement	-	-	-	-	-	CFC	CD	DD
30642	I2 (negative sequence) of side 1 (I2S1=)	Measurement	-	-	-	-	-	CFC	CD	DD
30643	3I0 (zero sequence) of side 2 (3I0S2=)	Measurement	-	-	-	-	-	CFC	CD	DD
30644	I1 (positive sequence) of side 2 (I1S2=)	Measurement	-	-	-	-	-	CFC	CD	DD
30645	I2 (negative sequence) of side 2 (I2S2=)	Measurement	-	-	-	-	-	CFC	CD	DD
30646	Operat. meas. current I1 (I1=)	Measurement	-	-	-	-	-	CFC	CD	DD
30647	Operat. meas. current I2 (I2=)	Measurement	-	-	-	-	-	CFC	CD	DD
30648	Operat. meas. current I3 (I3=)	Measurement	-	-	-	-	-	CFC	CD	DD
30649	Operat. meas. current I4 (I4=)	Measurement	-	-	-	-	-	CFC	CD	DD
30650	Operat. meas. current I5 (I5=)	Measurement	-	-	-	-	-	CFC	CD	DD
30651	Operat. meas. current I6 (I6=)	Measurement	-	-	-	-	-	CFC	CD	DD
30652	Operat. meas. current I7 (I7=)	Measurement	-	-	-	-	-	CFC	CD	DD
30653	Operat. meas. current I8 (I8=)	Measurement	-	-	-	-	-	CFC	CD	DD
30656	Operat. meas. voltage Umeas. (Umeas.=)	Measurement	-	-	-	-	-	CFC	CD	DD
30661	Operat. meas. current IL1 meas. loc. 1 (IL1M1=)	Measurement	134	149	No	9	2	CFC	CD	DD
30662	Operat. meas. current IL2 meas. loc. 1 (IL2M1=)	Measurement	134	149	No	9	1	CFC	CD	DD
30663	Operat. meas. current IL3 meas. loc. 1 (IL3M1=)	Measurement	134	149	No	9	3	CFC	CD	DD
30664	3I0 (zero sequence) of meas. loc. 1 (3I0M1=)	Measurement	-	-	-	-	-	CFC	CD	DD
30665	I1 (positive sequence) of meas. loc. 1 (I1M1=)	Measurement	-	-	-	-	-	CFC	CD	DD
30666	I2 (negative sequence) of meas. loc. 1 (I2M1=)	Measurement	-	-	-	-	-	CFC	CD	DD
30667	Operat. meas. current IL1 meas. loc. 2 (IL1M2=)	Measurement	134	149	No	9	5	CFC	CD	DD
30668	Operat. meas. current IL2 meas. loc. 2 (IL2M2=)	Measurement	134	149	No	9	4	CFC	CD	DD
30669	Operat. meas. current IL3 meas. loc. 2 (IL3M2=)	Measurement	134	149	No	9	6	CFC	CD	DD
30670	3I0 (zero sequence) of meas. loc. 2 (3I0M2=)	Measurement	-	-	-	-	-	CFC	CD	DD
30671	I1 (positive sequence) of meas. loc. 2 (I1M2=)	Measurement	-	-	-	-	-	CFC	CD	DD
30672	I2 (negative sequence) of meas. loc. 2 (I2M2=)	Measurement	-	-	-	-	-	CFC	CD	DD
30673	Operat. meas. current IL1 meas. loc. 3 (IL1M3=)	Measurement	134	149	No	9	8	CFC	CD	DD
30674	Operat. meas. current IL2 meas. loc. 3 (IL2M3=)	Measurement	134	149	No	9	7	CFC	CD	DD

No.	Description	Function	IEC 60870-5-103					Configurable in Matrix		
			Type	Information Number	Compatibility	Data Unit	Position	CFC	Control Display	Default Display
30675	Operat. meas. current IL3 meas. loc. 3 (IL3M3=)	Measurement	134	149	No	9	9	CFC	CD	DD
30676	3I0 (zero sequence) of meas. loc. 3 (3I0M3=)	Measurement	-	-	-	-	-	CFC	CD	DD
30677	I1 (positive sequence) of meas. loc. 3 (I1M3=)	Measurement	-	-	-	-	-	CFC	CD	DD
30678	I2 (negative sequence) of meas. loc. 3 (I2M3=)	Measurement	-	-	-	-	-	CFC	CD	DD
30679	Operat. meas. current IL1 meas. loc. 4 (IL1M4=)	Measurement	134	149	No	9	11	CFC	CD	DD
30680	Operat. meas. current IL2 meas. loc. 4 (IL2M4=)	Measurement	134	149	No	9	10	CFC	CD	DD
30681	Operat. meas. current IL3 meas. loc. 4 (IL3M4=)	Measurement	134	149	No	9	12	CFC	CD	DD
30682	3I0 (zero sequence) of meas. loc. 4 (3I0M4=)	Measurement	-	-	-	-	-	CFC	CD	DD
30683	I1 (positive sequence) of meas. loc. 4 (I1M4=)	Measurement	-	-	-	-	-	CFC	CD	DD
30684	I2 (negative sequence) of meas. loc. 4 (I2M4=)	Measurement	-	-	-	-	-	CFC	CD	DD
30685	Operat. meas. current IL1 meas. loc. 5 (IL1M5=)	Measurement	134	149	No	9	14	CFC	CD	DD
30686	Operat. meas. current IL2 meas. loc. 5 (IL2M5=)	Measurement	134	149	No	9	13	CFC	CD	DD
30687	Operat. meas. current IL3 meas. loc. 5 (IL3M5=)	Measurement	134	149	No	9	15	CFC	CD	DD
30688	3I0 (zero sequence) of meas. loc. 5 (3I0M5=)	Measurement	-	-	-	-	-	CFC	CD	DD
30689	I1 (positive sequence) of meas. loc. 5 (I1M5=)	Measurement	-	-	-	-	-	CFC	CD	DD
30690	I2 (negative sequence) of meas. loc. 5 (I2M5=)	Measurement	-	-	-	-	-	CFC	CD	DD
30713	3I0 (zero sequence) of side 3 (3I0S3=)	Measurement	-	-	-	-	-	CFC	CD	DD
30714	I1 (positive sequence) of side 3 (I1S3=)	Measurement	-	-	-	-	-	CFC	CD	DD
30715	I2 (negative sequence) of side 3 (I2S3=)	Measurement	-	-	-	-	-	CFC	CD	DD
30716	Operat. meas. current IL1 side 4 (IL1S4=)	Measurement	-	-	-	-	-	CFC	CD	DD
30717	Operat. meas. current IL2 side 4 (IL2S4=)	Measurement	-	-	-	-	-	CFC	CD	DD
30718	Operat. meas. current IL3 side 4 (IL3S4=)	Measurement	-	-	-	-	-	CFC	CD	DD
30719	3I0 (zero sequence) of side 4 (3I0S4=)	Measurement	-	-	-	-	-	CFC	CD	DD
30720	I1 (positive sequence) of side 4 (I1S4=)	Measurement	-	-	-	-	-	CFC	CD	DD
30721	I2 (negative sequence) of side 4 (I2S4=)	Measurement	-	-	-	-	-	CFC	CD	DD
30722	Operat. meas. current IL1 side 5 (IL1S5=)	Measurement	-	-	-	-	-	CFC	CD	DD
30723	Operat. meas. current IL2 side 5 (IL2S5=)	Measurement	-	-	-	-	-	CFC	CD	DD
30724	Operat. meas. current IL3 side 5 (IL3S5=)	Measurement	-	-	-	-	-	CFC	CD	DD
30725	3I0 (zero sequence) of side 5 (3I0S5=)	Measurement	-	-	-	-	-	CFC	CD	DD
30726	I1 (positive sequence) of side 5 (I1S5=)	Measurement	-	-	-	-	-	CFC	CD	DD
30727	I2 (negative sequence) of side 5 (I2S5=)	Measurement	-	-	-	-	-	CFC	CD	DD
30728	Operat. meas. auxiliary current IX1 (IX1=)	Measurement	-	-	-	-	-	CFC	CD	DD
30729	Operat. meas. auxiliary current IX2 (IX2=)	Measurement	-	-	-	-	-	CFC	CD	DD
30730	Operat. meas. auxiliary current IX3 (IX3=)	Measurement	-	-	-	-	-	CFC	CD	DD
30731	Operat. meas. auxiliary current IX4 (IX4=)	Measurement	-	-	-	-	-	CFC	CD	DD
30732	Operat. meas. current I9 (I9=)	Measurement	-	-	-	-	-	CFC	CD	DD
30733	Operat. meas. current I10 (I10=)	Measurement	-	-	-	-	-	CFC	CD	DD
30734	Operat. meas. current I11 (I11=)	Measurement	-	-	-	-	-	CFC	CD	DD
30735	Operat. meas. current I12 (I12=)	Measurement	-	-	-	-	-	CFC	CD	DD

No.	Description	Function	IEC 60870-5-103					Configurable in Matrix		
			Type	Information Number	Compatibility	Data Unit	Position	CFC	Control Display	Default Display
30736	Phase angle in phase IL1 meas. loc. 1 (φIL1M1=)	Measurement	-	-	-	-	-	CFC	CD	DD
30737	Phase angle in phase IL2 meas. loc. 1 (φIL2M1=)	Measurement	-	-	-	-	-	CFC	CD	DD
30738	Phase angle in phase IL3 meas. loc. 1 (φIL3M1=)	Measurement	-	-	-	-	-	CFC	CD	DD
30739	Phase angle in phase IL1 meas. loc. 2 (φIL1M2=)	Measurement	-	-	-	-	-	CFC	CD	DD
30740	Phase angle in phase IL2 meas. loc. 2 (φIL2M2=)	Measurement	-	-	-	-	-	CFC	CD	DD
30741	Phase angle in phase IL3 meas. loc. 2 (φIL3M2=)	Measurement	-	-	-	-	-	CFC	CD	DD
30742	Phase angle in phase IL1 meas. loc. 3 (φIL1M3=)	Measurement	-	-	-	-	-	CFC	CD	DD
30743	Phase angle in phase IL2 meas. loc. 3 (φIL2M3=)	Measurement	-	-	-	-	-	CFC	CD	DD
30744	Phase angle in phase IL3 meas. loc. 3 (φIL3M3=)	Measurement	-	-	-	-	-	CFC	CD	DD
30745	Phase angle in phase IL1 meas. loc. 4 (φIL1M4=)	Measurement	-	-	-	-	-	CFC	CD	DD
30746	Phase angle in phase IL2 meas. loc. 4 (φIL2M4=)	Measurement	-	-	-	-	-	CFC	CD	DD
30747	Phase angle in phase IL3 meas. loc. 4 (φIL3M4=)	Measurement	-	-	-	-	-	CFC	CD	DD
30748	Phase angle in phase IL1 meas. loc. 5 (φIL1M5=)	Measurement	-	-	-	-	-	CFC	CD	DD
30749	Phase angle in phase IL2 meas. loc. 5 (φIL2M5=)	Measurement	-	-	-	-	-	CFC	CD	DD
30750	Phase angle in phase IL3 meas. loc. 5 (φIL3M5=)	Measurement	-	-	-	-	-	CFC	CD	DD
30751	Phase angle in auxiliary current IX1 (φIX1=)	Measurement	-	-	-	-	-	CFC	CD	DD
30752	Phase angle in auxiliary current IX2 (φIX2=)	Measurement	-	-	-	-	-	CFC	CD	DD
30753	Phase angle in auxiliary current IX3 (φIX3=)	Measurement	-	-	-	-	-	CFC	CD	DD
30754	Phase angle in auxiliary current IX4 (φIX4=)	Measurement	-	-	-	-	-	CFC	CD	DD
30755	Phase angle of current I8 (φI8=)	Measurement	-	-	-	-	-	CFC	CD	DD
30756	Phase angle of current I9 (φI9=)	Measurement	-	-	-	-	-	CFC	CD	DD
30757	Phase angle of current I10 (φI10=)	Measurement	-	-	-	-	-	CFC	CD	DD
30758	Phase angle of current I11 (φI11=)	Measurement	-	-	-	-	-	CFC	CD	DD
30759	Phase angle of current I12 (φI12=)	Measurement	-	-	-	-	-	CFC	CD	DD
30760	Operat. meas. voltage U4 (U4 =)	Measurement	-	-	-	-	-	CFC	CD	DD
30761	Operat. meas. voltage U0 measured (U0meas.=)	Measurement	-	-	-	-	-	CFC	CD	DD
30762	Operat. meas. voltage U0 calculated (U0calc.=)	Measurement	-	-	-	-	-	CFC	CD	DD
30792	Phase angle of voltage UL1E (φUL1E=)	Measurement	-	-	-	-	-	CFC	CD	DD
30793	Phase angle of voltage UL2E (φUL2E=)	Measurement	-	-	-	-	-	CFC	CD	DD
30794	Phase angle of voltage UL3E (φUL3E=)	Measurement	-	-	-	-	-	CFC	CD	DD
30795	Phase angle of voltage U4 (φU4=)	Measurement	-	-	-	-	-	CFC	CD	DD
30796	Phase angle of voltage UE (φUE=)	Measurement	-	-	-	-	-	CFC	CD	DD

■

Glossary

Battery
The buffer battery ensures that specified data areas, flags, timers and counters are retained retentively.

Bay controllers
Bay controllers are devices with control and monitoring functions without protective functions.

Bit pattern indication
Bit pattern indication is a processing function by means of which items of digital process information applying across several inputs can be detected together in parallel and processed further. The bit pattern length can be specified as 1, 2, 3 or 4 bytes.

BP_xx
→ Bit pattern indication (Bitstring Of x Bit), x designates the length in bits (8, 16, 24 or 32 bits).

C_xx
Command without feedback

CF_xx
Command with feedback

CFC
Continuous Function Chart. CFC is a graphical editor with which a program can be created and configured by using ready-made blocks.

CFC blocks
Blocks are parts of the user program delimited by their function, their structure or their purpose.

Chatter blocking
A rapidly intermittent input (for example, due to a relay contact fault) is switched off after a configurable monitoring time and can thus not generate any further signal changes. The function prevents overloading of the system when a fault arises.

Combination devices
Combination devices are bay devices with protection functions and a control display.

Combination matrix
From DIGSI V4.6 onward, up to 32 compatible SIPROTEC 4 devices can communicate with one another in an Inter Relay Communication combination (IRC combination). Which device exchanges which information is defined with the help of the combination matrix.

Communication branch
A communications branch corresponds to the configuration of 1 to n users that communicate by means of a common bus.

Communication reference CR
The communication reference describes the type and version of a station in communication by PROFIBUS.

Component view In addition to a topological view, SIMATIC Manager offers you a component view. The component view does not offer any overview of the hierarchy of a project. It does, however, provide an overview of all the SIPROTEC 4 devices within a project.

COMTRADE Common Format for Transient Data Exchange, format for fault records.

Container If an object can contain other objects, it is called a container. The object Folder is an example of such a container.

Control display The display which is displayed on devices with a large (graphic) display after you have pressed the control key is called the control display. It contains the switchgear that can be controlled in the feeder with status display. It is used to perform switching operations. Defining this display is part of the configuration.

Data pane → The right-hand area of the project window displays the contents of the area selected in the → navigation window, for example indications, measured values, etc. of the information lists or the function selection for the device configuration.

DCF77 The extremely precise official time is determined in Germany by the "Physikalisch-Technische-Bundesanstalt PTB" in Braunschweig. The atomic clock station of the PTB transmits this time via the long-wave time-signal transmitter in Mainflingen near Frankfurt/Main. The emitted time signal can be received within a radius of approx. 1,500 km from Frankfurt/Main.

Device container In the Component View, all SIPROTEC 4 devices are assigned to an object of type Device container. This object is a special object of DIGSI Manager. However, since there is no component view in DIGSI Manager, this object only becomes visible in conjunction with STEP 7.

Double command Double commands are process outputs which indicate 4 process states at 2 outputs: 2 defined (for example ON/OFF) and 2 undefined states (for example intermediate positions)

Double-point indication Double-point indications are items of process information which indicate 4 process states at 2 inputs: 2 defined (for example ON/OFF) and 2 undefined states (for example intermediate positions).

DP → Double-point indication

DP_I → Double point indication, intermediate position 00

Drag and drop Copying, moving and linking function, used at graphics user interfaces. Objects are selected with the mouse, held and moved from one data area to another.

Earth The conductive earth whose electric potential can be set equal to zero at every point. In the area of earth electrodes the earth can have a potential deviating from zero. The term "Earth reference plane" is often used for this state.

Earth (verb) This term means that a conductive part is connected via an earthing system to the → earth.

Earthing Earthing is the total of all means and measures used for earthing.

Electromagnetic compatibility Electromagnetic compatibility (EMC) is the ability of an electrical apparatus to function fault-free in a specified environment without influencing the environment unduly.

EMC → Electromagnetic compatibility

ESD protection ESD protection is the total of all the means and measures used to protect electrostatic sensitive devices.

ExBPxx External bit pattern indication via an ETHERNET connection, device-specific → Bit pattern indication

ExC External command without feedback via an ETHERNET connection, device-specific

ExCF External command with feedback via an ETHERNET connection, device-specific

ExDP External double point indication via an ETHERNET connection, device-specific → Double point indication

ExDP_I External double point indication via an ETHERNET connection, intermediate position 00, device-specific → Double point indication

ExMV External metered value via an ETHERNET connection, device-specific

ExSI External single point indication via an ETHERNET connection, device-specific → Single point indication

ExSI_F External single point indication via an ETHERNET connection, device-specific → Transient information, → Single point indication

Field devices Generic term for all devices assigned to the field level: Protection devices, combination devices, bay controllers.

Floating → Without electrical connection to the → Earth.

FMS communication branch Within an FMS communication branch, the users communicate on the basis of the PROFIBUS FMS protocol via a PROFIBUS FMS network.

Folder This object type is used to create the hierarchical structure of a project.

General interrogation (GI) During the system start-up the state of all the process inputs, of the status and of the fault image is sampled. This information is used to update the system-end process

image. The current process state can also be sampled after a data loss by means of a GI.

GOOSE message GOOSE messages (Generic Object Oriented Substation Event) are data pakets which are transferred event-controlled via the Ethernet communication system. They serve for direct information exchange among the relays. This mechanism implements cross-communication between bay units.

GPS Global Positioning System. Satellites with atomic clocks on board orbit the earth twice a day on different paths in approx. 20,000 km. They transmit signals which also contain the GPS universal time. The GPS receiver determines its own position from the signals received. From its position it can derive the delay time of a satellite signal and thus correct the transmitted GPS universal time.

Hierarchy level Within a structure with higher-level and lower-level objects a hierarchy level is a container of equivalent objects.

HV field description The HV project description file contains details of fields which exist in a ModPara-project. The actual field information of each field is stored in a HV field description file. Within the HV project description file, each field is allocated such a HV field description file by a reference to the file name.

HV project description All the data is exported once the configuration and parameterization of PCUs and sub-modules using ModPara has been completed. This data is split up into several files. One file contains details about the fundamental project structure. This also includes, for example, information detailing which fields exist in this project. This file is called a HV project description file.

ID Internal double point indication → Double point indication

ID_S Internal double point indication, intermediate position 00 → Double point indication

IEC International Electrotechnical Commission, international standardisation body

IEC address Within an IEC bus a unique IEC address has to be assigned to each SIPROTEC 4 device. A total of 254 IEC addresses are available for each IEC bus.

IEC communication branch Within an IEC communication branch the users communicate on the basis of the IEC60-870-5-103 protocol via an IEC bus.

IEC61850 International communication standard for communication in substations. The objective of this standard is the interoperability of devices from different manufacturers on the station bus. An Ethernet network is used for data transfer.

Initialization string An initialization string comprises a range of modem-specific commands. These are transmitted to the modem within the framework of modem initialization. The commands can, for example, force specific settings for the modem.

Inter relay communication → IRC combination

IRC combination Inter Relay Communication, IRC, is used for directly exchanging process information between SIPROTEC 4 devices. You require an object of type IRC combination to configure an inter relay communication. Each user of the combination and all the necessary communication parameters are defined in this object. The type and scope of the information exchanged between the users is also stored in this object.

IRIG-B Time signal code of the Inter-Range Instrumentation Group

IS Internal single point indication → Single point indication

IS_F Internal indication transient → Transient information, → Single point indication

ISO 9001 The ISO 9000 ff range of standards defines measures used to assure the quality of a product from the development stage to the manufacturing stage.

Link address The link address gives the address of a V3/V2 device.

List view The right pane of the project window displays the names and icons of objects which represent the contents of a container selected in the tree view. Because they are displayed in the form of a list, this area is called the list view.

LV Limit value

LVU Limit value, user-defined

Master Masters may send data to other users and request data from other users. DIGSI operates as a master.

Metered value Metered values are a processing function with which the total number of discrete similar events (counting pulses) is determined for a period, usually as an integrated value. In power supply companies the electrical work is usually recorded as a metered value (energy purchase/supply, energy transportation).

MLFB MLFB is the abbreviation for "MaschinenLesbare FabrikateBezeichnung" (machine-readable product designation). This is the equivalent of an order number. The type and version of a SIPROTEC 4 device are coded in the order number.

Modem connection This object type contains information on both partners of a modem connection, the local modem and the remote modem.

Modem profile A modem profile consists of the name of the profile, a modem driver and may also comprise several initialization commands and a user address. You can create several modem profiles for one physical modem. To do so you need to link various initialization commands or user addresses to a modem driver and its properties and save them under different names.

Modems Modem profiles for a modem connection are stored in this object type.

MV Measured value

MVMV Metered value which is formed from the measured value

MVT Measured value with time

MVU Measured value, user-defined

Navigation pane The left pane of the project window displays the names and symbols of all containers of a project in the form of a folder tree.

Object Each element of a project structure is called an object in DIGSI.

Object properties Each object has properties. These might be general properties that are common to several objects. An object can also have specific properties.

Off-line In offline mode a connection to a SIPROTEC 4 device is not required. You work with data which are stored in files.

OI_F Output Indication Transient → Transient information

On-line When working in online mode, there is a physical connection to a SIPROTEC 4 device. This connection can be implemented as a direct connection, as a modem connection or as a PROFIBUS FMS connection.

OUT Output indication

Parameter set The parameter set is the set of all parameters that can be set for a SIPROTEC 4 device.

Phone book User addresses for a modem connection are saved in this object type.

PMV Pulse metered value

Process bus Devices with a process bus interface allow direct communication with SICAM HV modules. The process bus interface is equipped with an Ethernet module.

PROFIBUS PROcess FIeld BUS, the German process and field bus standard, as specified in the standard EN 50170, Volume 2, PROFIBUS. It defines the functional, electrical, and mechanical properties for a bit-serial field bus.

PROFIBUS address Within a PROFIBUS network a unique PROFIBUS address has to be assigned to each SIPROTEC 4 device. A total of 254 PROFIBUS addresses are available for each PROFIBUS network.

Project Content-wise, a project is the image of a real power supply system. Graphically, a project is represented as a number of objects which are integrated in a hierarchical structure. Physically, a project consists of a number of directories and files containing project data.

Protection devices All devices with a protective function and no control display.

Reorganizing Frequent addition and deletion of objects results in memory areas that can no longer be used. By reorganizing projects, you can release these memory areas again. However, a cleanup also reassigns the VD addresses. The consequence is that all SIPROTEC 4 devices have to be reinitialized.

RIO file Relay data Interchange format by Omicron.

RSxxx-interface Serial interfaces RS232, RS422/485

SCADA Interface Rear serial interface on the devices for connecting to a control system via IEC or PROFIBUS.

Service port Rear serial interface on the devices for connecting DIGSI (for example, via modem).

Setting parameters General term for all adjustments made to the device. Parameterization jobs are executed by means of DIGSI or, in some cases, directly on the device.

SI → Single point indication

SI_F → Single point indication transient → Transient information, → Single point indication

SICAM SAS Modularly structured station control system, based on the substation controller → SICAM SC and the SICAM WinCC operator control and monitoring system.

SICAM SC Substation Controller. Modularly structured substation control system, based on the SIMATIC M7 automation system.

SICAM WinCC The SICAM WinCC operator control and monitoring system displays the state of your network graphically, visualizes alarms, interrupts and indications, archives the network data, offers the possibility of intervening manually in the process and manages the system rights of the individual employee.

Single command Single commands are process outputs which indicate 2 process states (for example, ON/OFF) at one output.

Single point indication Single indications are items of process information which indicate 2 process states (for example, ON/OFF) at one output.

SIPROTEC The registered trademark SIPROTEC is used for devices implemented on system base V4.

SIPROTEC 4 device This object type represents a real SIPROTEC 4 device with all the setting values and process data it contains.

SIPROTEC 4 variant This object type represents a variant of an object of type SIPROTEC 4 device. The device data of this variant may well differ from the device data of the original object. However, all variants derived from the original object have the same VD address as the original object. For this reason they always correspond to the same real SIPROTEC 4 device as the original object. Objects of type SIPROTEC 4 variant have a variety of uses, such as documenting different operating states when entering parameter settings of a SIPROTEC 4 device.

Slave A slave may only exchange data with a master after being prompted to do so by the master. SIPROTEC 4 devices operate as slaves.

Time stamp Time stamp is the assignment of the real time to a process event.

Topological view DIGSI Manager always displays a project in the topological view. This shows the hierarchical structure of a project with all available objects.

Transformer Tap Indication Transformer tap indication is a processing function on the DI by means of which the tap of the transformer tap changer can be detected together in parallel and processed further.

Transient information A transient information is a brief transient → single-point indication at which only the coming of the process signal is detected and processed immediately.

Tree view The left pane of the project window displays the names and symbols of all containers of a project in the form of a folder tree. This area is called the tree view.

TxTap → Transformer Tap Indication

User address A user address comprises the name of the user, the national code, the area code and the user-specific phone number.

Users From DIGSI V4.6 onward , up to 32 compatible SIPROTEC 4 devices can communicate with one another in an Inter Relay Communication combination. The individual participating devices are called users.

VD A VD (Virtual Device) includes all communication objects and their properties and states that are used by a communication user through services. A VD can be a physical device, a module of a device or a software module.

VD address The VD address is assigned automatically by DIGSI Manager. It exists only once in the entire project and thus serves to identify unambiguously a real SIPROTEC 4 device. The VD address assigned by DIGSI Manager must be transferred to the SIPROTEC 4 device in order to allow communication with DIGSI Device Editor.

VFD A VFD (Virtual Field Device) includes all communication objects and their properties and states that are used by a communication user through services.

Literature

/1/ SIPROTEC 4 System Manual; E50417-H1176-C151-A2

/2/ SIPROTEC DIGSI, Start UP; E50417-G1176-C152-A2

/3/ DIGSI CFC, Manual; E50417-H1176-C098-A4

/4/ SIPROTEC SIGRA 4, Manual; E50417-H1176-C070-A2

Index

A

Acknowledgement of Commands *337*
Add-on Restraint *111*
Add-on Stabilisation *107*
Additional Functions *300, 487*
Additional Interface *429*
Ageing Rate *225, 229*
Alternating Voltage *423*
Analogue Inputs *18*
Analogue Inputs and Outputs *422*
Assembling of the Device *369*
Assigned Measuring Points *46*
Assignments of the D-SUB Socket *375*
Asymmetrical Load Protection
- Asymmetric Faults *213*
- Characteristics *215*
- Definite-time Stages *213*
- Dropout Time Multiplier *215*
- Generator *214*
- Motor *214*
- Pickup *207*
- Pickup Time Multiplier *216*
- Thermal Tripping Characteristic *216*
- Trip Time *207*
- Tripping Characteristic *215*

Auto-transformers *52, 59*
Auxiliary Inputs *46*
Auxiliary Transformers *46*
Auxiliary Voltage *422*
Auxiliary Voltages *279*
Average Values *329*

B

Back-up Battery *279, 490*
Battery *490*
Binary Inputs *341*
Binary Outputs *300, 341*
Branch Point *123*
Broken Wire *282*
Buchholz Protection *276*
Busbar *70*
Busbar Data *70*
Busbar Protection *24, 124, 200, 204*
Busbars *38*
- Frequency *440*
- Operating Time *440*

C

CFC *481*
Change of Operating Stage *384*
Changing Setting Groups *37, 341*
Check: Time Synchronisation Interface *375*
Circuit Breaker Data *83*
Circuit Breaker Failure Protection *27, 478*
Circuit Breaker Status *83*
Climatic Stress Test *432*
Clock Time Synchronisation *490*
Cold Load Pickup
- Cold Load Criteria *191, 193*

Command Duration *84*
Command Execution *333*
Command Output *337*
Command Path *333*
Command Task *333*
Commissioning *28*
Commissioning Aids *490*
Constructional Daily *434*
Control Logic *337*
Cool-down Time *243*
Coolant *224*
Cooling Method *223*
Cooling Methods *229*
Couplings
- Blocking Signal *277*
- Command Duration *276*

CPU *375*
Crossblock Function *108, 134, 134, 160*
Cubicle Mounting *370*
Current Direction *141*
Current Grading *173*
Current Input *124*
Current Measuring Input *179, 180, 181, 196, 200*
Current Release *124*
Current Restraint *105*
Current Symmetry *280*
Current Symmetry Supervision *280*
Current Transformer
- Knee-point Voltage *198, 203*

Current Transformer Data *71, 74*
Current Transformer Fault *186*
Current Transformer Saturation *107, 109, 110*
Current Transformers
- Saturation Voltage *199*
- Secondary Circuit *129*

Currents *340*

D

Delay Times *175*
Dialogue Box *383*
Differential Current *129*
  Monitoring *131*
Differential Current Monitor *439*
Differential Currents *108*
Differential Protection
  Additional Stabilisation *133*
  Characteristic *131*
  Delay Times *132*
  Dropout *111*
  Earth Fault *24*
  Generators *23*
  High Impedance *24*
  Increase of Pickup Value *133*
  Lines *23*
  Measuring Tolerances *131*
  Motors *23*
  Pickup *111*
  Pickup Values *435*
  Restraint Current *133*
  Short Stubs *23*
  Stabilisation *132*
  Startup *133*
  Transformers *23*
  Tripping *131*
  Tripping Characteristic *110, 132*
Differential Values *312*
Dimensional Drawings *492, 493*
Dimensions: Cubicle Mounting *493*
Dimensions: Cubicle mounting *492*
Dimensions: Panel Flush Mounting *492, 493*
Dimensions: Panel Surface Mounting *491*
Direct Impedance *109*
Direct Voltage *422*
Disassembly of the Device *346*
Disconnection *297*
Disk Emulation *182*
Double Earth Fault *127, 173*
Dropout Characteristic: user-defined *39*
Dynamic Cold Load Pickup
  Dropout of Pickup *192*
  Dropout Time *191*
  Overcurrent Protection Function *191*
  Pickup Values *194*
  Time Stages *194*
  Timers *191*

E

Earth Fault *127, 142, 173, 198, 199, 204*
  CT Saturation *145*
  Restraint *144*
  Restraint Quantity *145*
  Sensitivity *144*
  Starpoint Current *144*
  Through-Fault Current *144*
  Tripping Characteristics *145*
Earth Fault Differential Protection
  Delay Times *148*
  Measuring Principle *141*
  Sensitivity *148*
Earth-fault Sensitivity *127*
Electrical Tests *430*
EMC Tests for the Interference Emission (type test) *431*
EMC Tests for the Interference Immunity (type test) *430*
Emergency Start *222, 228*
EN100-module
  Interface Selection *35*
Energy meter *490*
Event Buffer *301*
External Direct Trip *27*
External Information *27*
External Trip Commands *479*
  Delay Times *277*
  Transformer Messages *276*

F

Fault Characteristic *107*
Fault Current *104, 106, 121, 122, 126, 181*
Fault Currents *124*
Fault Logging *488*
Fault Logs *111*
Fault Recording *28, 325, 489*
  Recording Duration *326*
Fault Recordings *111*
Fault Value Storage
  Storage Criterion *326*
  Storage Period *326*
Feedback Monitoring *337*
Feeder Current Guard *440*
Ferraris Disk *182*
Fibre-optic cables *376*
Final Preparation of the Device *420*
Flexible Functions *27*
  Blocking *316*
  Configuration Settings *317*
  Function Settings *320*
  Measured Values *315*
  Processing *316*

Forward Power Monitoring *26*
Forward Power Protection
Delay Times *253*
Measuring Procedure *253*
Pickup Values *251*
Fourier Analysis *108*
Frequency Increase *263*
Frequency Protection *27, 476*
Minimum Voltage *266*
Pickup Values, Times *265*
Function Blocks *481*
Functional Scope *36*
Fuse Failure Monitor *283*

G

General *33*
General Pickup *294*
Generator *38*
Generators
Frequency *439*
Operating Time *439*
Ground Fault *186*

H

Harmonic Analysis *111*
Harmonic Restraint *134*
High-current Trip Stage *109*
High-impedance Differential Protection *122, 201*
Sensitivity *203*
Stability Conditions *202*
High-impedance Principle *198*
High-set Stage *180*
High-set Stages *151, 162, 173, 185*
High-Speed Busbar Protection *160*
Hot Spot *224*
Hot-spot Temperature *224, 229, 229*
Hot-spot Temperature Calculation *223*
Humidity *433*

I

Increase of Characteristic *109*
Increase of Pickup Value *109*
Indications *301, 301*
Information to a Control Centre *301*
Input/Output Board
C-I/O-2 *356*
C-I/O-9 *359, 362*
Input/Output Boards
C-I/O-1 *353*
Input/Output Module
C-I/O-1 *353*
Inrush Current *108, 159, 180, 187*
Inrush Currents *108*
Inrush Restraint *108, 162, 163, 173, 175, 185, 185, 185*
Instantaneous Tripping *109, 111*
Integrated Display (LCD) *300*
Interface Board *375*
Interfaces *29*
Interlocking *334*
Isolation Test *430*

K

K-factor *226*
k-factor *221*

L

Leakage Protection *24*
Life Contact *350*
Limits *313*
Limits for CFC Blocks *482*
Limits for User-defined Functions *482*
Lines *38*
Lines; Short Lines *68*
Live Contact *279*
Load Circuit *124*
Log Buffers *28*
Logic Diagram
Phase Currents *152*
Logic Diagrams
Zero Sequence Current *152*
Long-Term Average Values *489*

M

Main Protected Object *46*
Main Protected Object; Protected Object *37*
Manual Close *162, 183*
Manual Close Pulse *158*
Manual Closing *184*
Measured Quantities *480*
Measured Values Monitoring *285*
Measured Voltage Failure *284*
Measuring Input *199*
Measuring Input for High-impedance Differential Protection *198*
Measuring Locations *46*
Mechanical Tests *432*
Memory Components *279*

MI System *19*
Mini-busbar *123*
Mini-busbars *38*
Mini-busbars; Busbars *68*
Minimum Command Duration *113*
Minimum Trip Command Duration *295*
Minimum Values *489, 489*
Minimum, Maximum Values *329*
Module Arrangement *348*
Monitoring Functions *28, 480*
Monitoring: Operator Interface *374*
Monitoring: Service Interface *374*
Monitoring: System Interface *374*
Motors *38*

O

Object Data
  Busbars *70*
Operating Current *164, 165*
Operating hours counter *490*
Operating Measured Value Temperatures *468*
Operation Diagram *106*
Operational Measured Values *487*
Operator Interface *425*
Order Data
  7UT613 *496*
  7UT633 and 7UT635 *499*
Output Relay Binary Outputs *423*
Output Relays *300*
Overcurrent Protection
  1-phase *25*
  Characteristic *196*
  Characteristics *154, 164, 174, 185, 442*
  Cold Load Pickup *455*
  Crossblock Function *168*
  Current Stages *442*
  Current Transformer Data *201*
  Delay Time *180*
  Delay Times *150, 173, 173*
  Disk Emulation *157, 165*
  Dropout Characteristic *168*
  Dropout to Pickup Ratios *443*
  Frequency *443*
  Inrush Current *159, 175*
  Inrush Restraint *152, 155, 168, 173, 183, 187, 443*
  Operating Times *443*
  Pick-up Threshold *173*
  Pickup *150, 155, 181*
  Pickup Threshold *185, 185*
  Pickup Value *154, 158, 204*
  Pickup Value Changeover *165, 183*
  Short Circuit *163*
  Single-Phase *456*
  Single-phase *200*
  single-phase *196*
  Startup Current *164*
  Time Delay *163, 185, 201, 204*
  Time Multiplier *165, 165, 186, 187*
  Trip Characteristic *164, 165, 167, 174*
  Tripping *150, 155*
  Tripping Characteristic *158, 186, 186*
  Tripping Time *185*
  User Characteristics *166*
  User-defined Characteristics *187*
  User-specific Characteristic *183*
Overcurrent Protection Earth Current
  Current Stages *453*
  Dropout to Pickup Ratios *454*
  Frequency *454, 456, 458*
  Inrush Restraint *454*
  Operating Times *454*
Overcurrent Stage *180*
Overcurrent Stages *164, 173, 185*
Overcurrent stages *150*
Overcurrent Time Protection *185*
Overexcitation Protection *26*
  Dropout-to-Pickup Ratio *469*
  Influencing Variables *469*
  Setting Ranges *469*
  Tolerances *469*
  Tripping Time Characteristic *469*
Overexcitation protection
  Setting Ranges *469*
Overload Protection *226, 469*
  Thermal *465*
  thermal *26*
Overvoltage Protection *26*
  Dropout Ratio *261*
  Pickup Values, Times *260*
Overvoltage Protection (ANSI 59) *475*

P

Parameter Group Changeover *37, 97*
Password *36*
Phase Assignment *70*
Phase Currents *124, 142*
Phase Evaluation *108*
Phase Rotation *282*
Phase Sequence *65, 282*
Phase Sequence Monitoring *282*
Power Supply *422, 423*
Power System Data 1 *83*
Protected Object *46, 340*
Protected Objects *104*
Protection Functions *485*
Publication Thresholds *468*

R

Rack Mounting *370*
Rated Frequency *65*
Reactor *122*
Reclosure Interlocking *295*
Reference Voltages *279*
Regulations *430*
Restraining Values *312*
Restraint Current *106, 109, 111*
Restraint in case of Overexcitation *134*
Restricted Earth Fault Protection *122, 122, 441*
  Frequency Influence *441*
  Operating Time *441*
  Pickup Threshold *148*
  Setting Ranges *441*
Reverse Interlocking *163*
Reverse Power Protection *26, 471*
  Delay Time *248*
  Pickup Seal-in Time *248*
  Pickup Value *247*
RTD *41, 232*
RTD Box *310, 376*
RTD box *494*
RTD Boxes for Overload Detection *468*
RTD-box *41, 41, 232*
  Hot-spot Temperature *65*
  Temperature Unit *65*

S

Sampling Frequency *279*
Saturation Indicator *107, 111*
Service Conditions *433*
Service/Modem Interface *425*
Setting Consistency *385*
Setting Groups *96*
  Changeover Possibility *96*
Short-circuit *107, 108*
Sides *46*
Single-phase Breaker Failure Protection *273*
Single-phase Overcurrent Protection
  Current Stages *456*
  Dropout to Pickup Ratios *456*
  Frequency *456*
Single-phase Transformer *50*
Standard Interlocking *335*
Standstill Time Constant *221*
Starpoint
  Treatment *130*
Starpoint Conditioning *66, 76*
Starpoint CT *144*
Starpoint Current *142, 186*
Starpoint Earthing Transformer *37*
Starpoint Former *122*
Start Test Measurement Recording *418*
Startup *109*
Statistic Values *489*
Summation Transformer *125*
  Connection *126*
  Symmetrical Fault *127*
  Winding Arrangement *128*
  Winding Factors *128*
Switching (interlocked/non-interlocked) *334*
Switching Statistics *28, 303*
System Frequency Decrease *263*
System Interface *426*

T

Tank Leakage Protection *200, 204*
  Delay Time *204*
  Sensitivity *204*
Temperature Detector *228, 232*
Temperature Detectors *232, 310, 468*
Temperature Meter *376*
Temperature Rise *222*
Temperature Sensor *232*
Temperatures *432*
Terminating Resistors *375*
Termination *365, 375*
Test in Command Direction *382*
Test Mode *380*
Test:
  Binäreingänge *384*
  Indication Direction *382*
  LEDs *385*
  Output Relays *384*
  Switching States of the Binary Inputs/Outputs *383*
  System Interface *381*
Testing:
  Time Synchronisation Interface *380*
  User-defined Functions *417*
Thermal Load *128*
Thermal Measured Values *310*
Thermal Overload Protection *26*
  Annunciation Thresholds *467*
  Cooling *467*
  Dropout to Pickup Ratios *465*
  Fault Indication *294*
  Frequency Influence *466*
  Setting Ranges *465*
  Temperature Detectors *467*
  Tolerances *465*
Thermal Replica *227*
Thermal Time Constant *227*
Through-flowing Current *106*
Time Allocation *490*
Time Delays *435*

Time Grading Schedule of the Network *164*
Time Overcurrent Protection
Characteristics *174*
Cold Load Pickup *158, 175, 187*
Earth Current *25, 453*
Inrush Restraint *159*
Phase Currents *24, 442*
Pickup *182*
Residual Currents *442*
Reverse Interlocking *160*
Time Multiplier *174*
User-specific Characteristics *175*
Zero Sequence Current *24*
Time Overcurrent Protection Earth Current
Characteristics *453*
Time Synchronisation Interface *375, 429*
Topology of the Protected Object *46*
Transformer
Current Matching *113*
Rated Data *121*
Saturation *142*
Starpoint *115*
Transformer Differential Protection *123*
Transformer Protection *133*
Transformers *37*
Conditioning *436*
Frequency *436*
Operating Time *436*
Restraint *436*
Transmission Block *380*
Transmission of Measured Values *303*
Transport Protection *373*
Transverse Differential Protection *121, 121*
Trip Circuit Supervision *288, 291*
Fault Indication *290*
Minimum Voltage Drop *289*
Supervision Criterion *289*
Trip circuit supervision *490*
Trip Command *111, 124*
Indications *296*
Trip Signal *129*
Tripping Characteristic *327*
Tripping Current *106*
Tripping Logic
Minimum Trip Command Duration *295*
Tripping Zone *107*
Two-stage Breaker Failure Protection *273*
Type of Commands *332*

U

Unbalanced Load Protection *25, 457*
Characteristics *207, 457*
Current Stages *457*
Delay Times *213*
Dropout to Pickup Ratios *458*
Operating Times *458*
Transformer *214*
Two-pole Fault *213*
Undervoltage Protection *26, 474*
Dropout Ratio *257*
Pickup Values, Times *256*

V

Vibration and shock during operation *432*
Vibration and Shock during Transport *432*
Voltage Inputs *422, 422*
Voltage Limitation *200*
Voltage Measurement *304*
Voltage Phase Sequence *282*
Voltage Sum Monitoring *282*
Voltage Symmetry Monitoring *281*

W

Warning Stage *221*
Warning Stages *228*
Watchdog *280, 280*
Web Monitor *327, 327*

Z

Zero Current *122, 122*
Zero Sequence Current *143*