© Siemens 2021

SIEMENS

Process Automation

Components for Continuous Emission Monitoring

Catalog AP 11

Update November 2021

www.siemens.com/processanalytics

© Siemens 2021

Related catalogs

Catalogs for Process Automation

www.siemens.com/pa-catalogs



Process Automation AP 01
Process Analytical Instruments

PDF (E86060-K3501-A101-B4-7600)



Process Automation FI 01
Products for
Process Instrumentation

PDF (E86060-K6201-A101-C4-7600)



Process Automation MP 20
Display Recorders
SIREC D

PDF (E86060-K6020-E101-A5-7600)



Process Automation MP 31
SIPART Controllers and Software

PDF (E86060-K6031-A100-B7-7600)



Process Automation WT 10
Products for Weighing Technology

PDF (E86060-K6410-A101-A7-7600)



SIMATIC ST PCS 7
SIMATIC PCS 7 Process Control System
Vol. 1: System components

E86060-K4678-A111-C7-7600



SIMATIC ST PCS 7 AO
SIMATIC PCS 7
Process Control System
Vol. 3: Add-ons for SIMATIC PCS 7

PDF (E86060-K4678-A121-B5-7600)



SIMATIC ST PCS 7 T
SIMATIC PCS 7 Process Control System
Vol. 2: Technology components

PDF (E86060-K4678-A141-A5-7600)



Industrial Communication IK PI
SIMATIC NET

E86060-K6710-A101-B8-7600



SITOP KT 10.1
SITOP
Power Supply

E86060-D4001-A510-E0



SIMATIC Ident ID 10
Industrial Identification Systems

E86060-K8310-A101-B1-7600



SITRAIN
Digital Industry Academy

www.siemens.com/sitrain

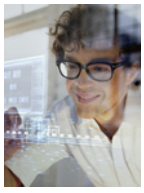

Industry Mall
Information and Ordering Platform
on the Internet:

www.siemens.com/industrymall



Contact
Your personal contact can be found in our Contacts Database at:

www.siemens.com/automation-contact



© Siemens 2021

Components for Continuous Emission Monitoring

Process Automation



Catalog AP 11· 2018
PDF update November 2021

Supersedes:
Catalog AP 11· 2018

Current updates of this catalog can be found as PDF at the following address:
https://support.industry.siemens.com/cs/attachments/109765431/AP11_en.pdf

For comfortable, fast and error free product selection you will get support in our PIA Life Cycle Portal:
www.siemens.com/pia-portal

Please contact your local Siemens branch.

© Siemens AG 2021

Gas sampling probes 1

Sample gas pumps 2

Heated sample gas lines 3

Components for sample preparation 4

Appendix 5

© Siemens 2021

© Siemens 2021

Gas sampling probes



1/2 **Gas sampling probe with external, electrically heated filter**

1/2 With self-regulating heater

1/3 With temperature controller

1/4 With self-regulating heater, explosion-proof design according to ATEX

1/6 With temperature controller, lockable gas path and backflush connection

1/11 **Accessories and configuration example**

© Siemens 2021

Gas sampling probes

Gas sampling probe with external, electrically heated filter

With self-regulating heater

Application

For continuous gas sampling in processes with dust loads < 2 g/m³ and an operating pressure up to 6 bar.

Design

The gas sampling probe with external, electrically heated filter has a mounting flange (DN 65, PN 6, form B) with G¾ female thread. A sampling pipe can be screwed into this.

An external filter element (separate Aarticle number) is in a filter chamber heated to 180 °C. Self-regulating heating elements are used. Temperature controllers and temperature limiters are not required.

The parts touched by the medium are made of stainless steel (mat. no. 1.4571), Viton and ceramic.

Special features

- Heated probe with external filter element (outlet filter)
- Can be ordered with or without weatherproof cover
- Simple removal of the external filter by rotating the handle by 90°
- The probe body and the area of the connection gland for the heated sample gas line are completely insulated.
- Self-regulated heating up to approx. 180 °C with low temperature alarm
- For dust loads up to 2 g/m³
- This probe is not suitable for use in hazardous areas.

Technical specifications

Max. permissible operating pressure	6 bar
Operating temperature	Approx. 180 °C at ambient temperature -20 ... +80 °C, max. 200 °C
Material of filter housing and flange	Stainless steel, mat. no. 1.4571
Mounting flange	DN 65, PN 6, form B
Gaskets	Graphite/1.4404 and see filters
Connection of sample gas outlet	1 x female thread ¼ NPT
Electric connection	2 plug-in connectors
Power supply	115/230 V AC, 50/60 Hz
Power consumption	Approx. 400 VA
Ambient temperature range	-20 … +80 °C (can be limited by mounted options)

Selection and ordering data

	Article No.
Gas sampling probe	
With self-regulating heating elements, with low temperature alarm, heated, 115 … 230 V AC, 50/60 Hz, 400 VA Complete thermal insulation with protective sleeve	
• without weatherproof cover	**7MB1943-2FA00**
• with weatherproof cover	**7MB1943-2FA01**

The external filter element, the screw-in fitting for connection of the sample gas line, and the sampling tube must be ordered separately. Also refer to the configuration example under "Accessories and configuration example".

Dimensional drawings

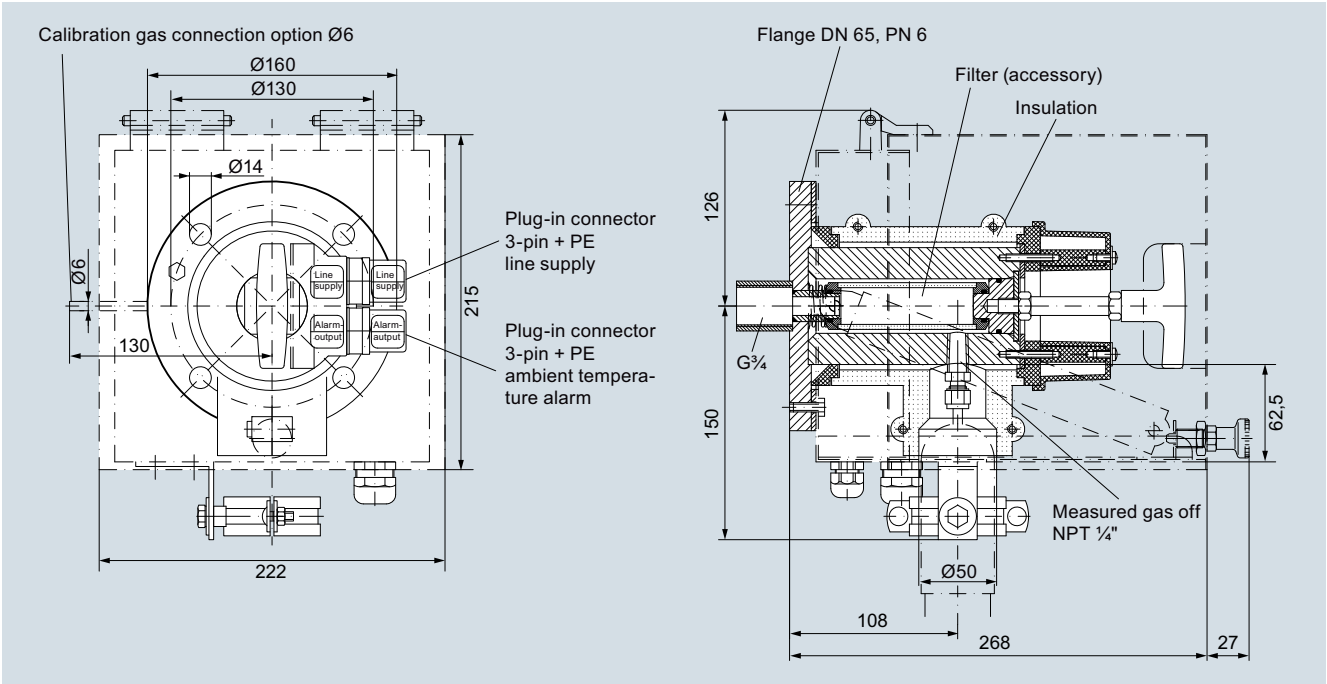

Gas sampling probe with external, electrically heated filter, with self-regulating heating elements (weatherproof cover indicated by dash-dotted line)

© Siemens 2021

Application

For gases with a dust concentration up to approx. 2 g/m³ and an operating pressure < 6 bar.

Design

The gas sampling probe with external, electrically heated filter has a mounting flange (DN 65 PN 6, form B) with G¾ female thread. A sampling pipe can be screwed into this.

The external filter element (separate order number) is fitted in a housing with minimum dead volume. It can be replaced quickly and easily without tools and without the need to dismantle the sample line.

The gas sampling probe is equipped with a weatherproof cover. The optimum heating of the complete filter housing, including the mounting flange, ensures safe outdoor operation without the temperature falling below the dew point.

Special features

- Heated probe with external filter element (outlet filter) and weatherproof cover
- Simple removal of outlet filter by rotating the handle by 90°
- The probe body and the area of the connection gland for the heated sample gas line are completely insulated
- Electronic temperature control up to 200 °C with low/high temperature alarm and display
- For dust loads up to 2 g/m³
- This probe is not suitable for use in hazardous areas

Technical specifications

Max. permissible operating pressure	6 bar
Max. permissible operating temperature	200 °C
Material of filter housing and flange	Stainless steel, mat. no. 1.4571
Mounting flange	DN 65, PN 6, form B
Seals	Graphite/1.4404 and see filters
Connection of sample gas outlet	1 x female thread ¼ NPT
Power supply	230 V AC; 2.0 A; 50/60 Hz or 115 V AC; 3.8 A; 50/60 Hz
Temperature range of controller	50 … 200 °C
Alarm adjustable to	• ± 5 … ± 30 K of setpoint • Factory-set to ± 15 K • Switching current max. 1 A
Degree of protection according to EN 60529	IP54
Ambient temperature range	-20 … +70 °C (can be limited by mounted options)

Selection and ordering data

	Article No.
Gas sampling probe	
with external filter (separate order), heated, with weatherproof cover, heating controlled by add-on controller with overtemperature and low temperature alarm	
• 230 V AC, 50/60 Hz	**7MB1943-2FB01**
• 115 V AC, 50/60 Hz	**7MB1943-2FB02**

The external filter element, the screw-in fitting for connection of the sample gas line, and the sampling tube must be ordered separately. Also refer to the configuration example under "Accessories and configuration example".

Dimensional drawings

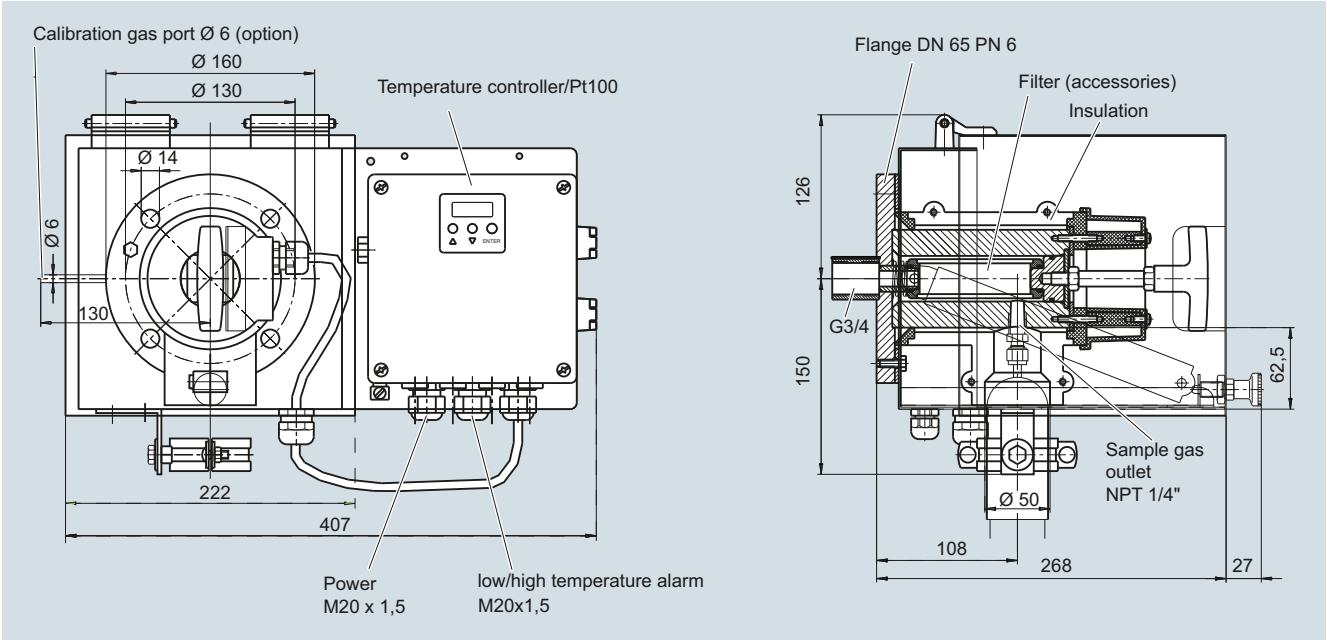

Gas sampling probe with external, electrically heated filter, weatherproof cover, and temperature controller

© Siemens 2021

Gas sampling probes

Gas sampling probe with external, electrically heated filter

With self-regulating heater, explosion-proof design according to ATEX

Application

For gases with a dust concentration up to approximately 2 g/m^3, an operating pressure < 6 bar and for installation in an Ex zone.

Design

The gas sampling probe with external, electrically heated filter has a mounting flange (DN 65 PN 6, form B) with G¾ female thread. A sampling pipe can be screwed into this.

The external filter element (separate order number) is fitted in a housing with minimum dead volume. It can be replaced quickly and easily without tools and without the need to dismantle the sample line.

The gas sampling probe is equipped with a weatherproof cover. The optimum heating of the complete filter housing, including the mounting flange, ensures safe outdoor operation without the temperature falling below the dew point.

This probe is suitable for use in Zone 1, 21 and for sampling from Zone 0, 20.
It should be noted that the permissible field of application of the probes may be limited when specially selected accessories are used. Please note the operating instructions of the probes, as well as the designation on the respective rating plate.

Special features

- Heated probe with external filter element (outlet filter) and weatherproof cover
- Simple removal of outlet filter by rotating the handle by 90°
- The probe body and the area of the connection gland for the heated sample gas line are completely insulated
- Self-regulated heating up to approx. 80 °C
- For dust loads up to 2 g/m^3

Technical specifications

Max. permissible operating pressure	6 bar
Max. inlet temperature of process medium	135 °C in accordance with EC type-examination certificate BVS 07 ATEX E 050 X
Max. flow	1 000 l/h
Material of filter housing and flange	Stainless steel, mat. no. 1.4571
Seals	Graphite/1.4404 and see filters
Connection of sample gas outlet	1 x female thread ¼ NPT
Power supply	230 V AC; 50/60 Hz or 115 V AC; 50/60 Hz
External miniature circuit-breaker type C	• 2 A for 230 V; 50/60 Hz • 3 A for 115 V; 50/60 Hz
Ambient temperature range	-20 … +50 °C in accordance with EC type-examination certificate BVS 07 ATEX E 050 X
Temperature self-regulating	Approx. 80 °C
Ex identification of basic devices	II 1GD / 2GD T4 T130 °C More precise specifications on Ex protection: EC type-examination certificate BVS 07 ATEX E 050 X

Selection and ordering data

	Article No.
Gas sampling probe (Ex)	
Protection type II 1GD / 2GD T4 T130 °C according to ATEX, with weatherproof cover and Ex junction box	
• 230 V AC, 50/60 Hz	**7MB1943-2FC01**
• 115 V AC, 50/60 Hz	**7MB1943-2FC02**

The external filter element, the screw-in fitting for connection of the sample gas line, and the sampling tube must be ordered separately. Also refer to the configuration example under "Accessories and configuration example". When selecting the accessories, the special conditions of use in hazardous areas and with flammable gases and/or combustible dusts must be observed for all use cases. With specially selected accessories, the approved application area of the probes can be restricted (note rating plate and operating instructions).

© Siemens 2021

Dimensional drawings

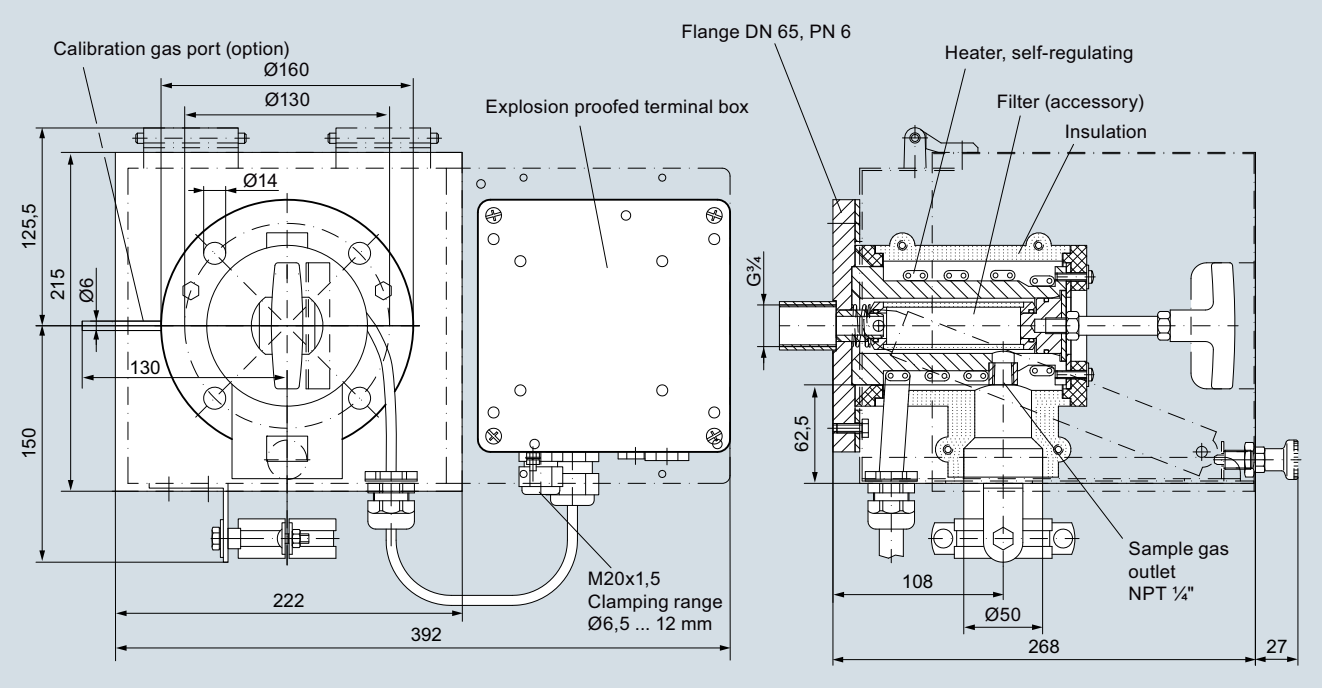

Gas sampling probe with external, electrically heated filter, weatherproof cover and self-regulating heater, explosion-proof version according to ATEX

© Siemens 2021

Gas sampling probes

Gas sampling probe with external, electrically heated filter

With temperature controller, lockable gas path and backflush connection

Application

Heated gas sampling probe with additional inlet filter for gases with a dust concentration up to approx. 20 g/m³ and a pressure of < 6 bar.

Design

The gas sampling probe is suitable for use with a hot sample gas with high dust concentration. A built-in ball valve is used for cutting off the process gas stream from the analysis system. The ball valve is operated manually in the basic version. In other versions, it can be operated pneumatically. For sample gases with 2 to approx. 20 g dust/m³, an inlet filter is attached to the G¾" thread located in the sample gas stream. Between the inlet filter and the probe, an optional sampling pipe can be mounted as an extension. This inlet filter can be optionally purged with instrument air in the direction of the process (backflushing). The connection for the purging air is located on the probe between the flange and the shut-off ball valve. Prior to purging, the outlet to the analyzer system is closed with the help of the ball valve.

A calibration gas connection with a non-return valve can also be optionally ordered.

The probe can be heated to 200 °C. A heater overtemperature or undertemperature alarm is output via an isolated changeover contact.

A minimum dead volume in the probe permits a short T90 time for the measuring equipment. The external filter element in the probe can be replaced quickly and easily without tools and without the need to dismantle the sample line.

The probe always has a weatherproof cover.

Special features

- Heated probe with shut-off ball valve, inlet filter and/or external filter with weatherproof cover
- Simple removal of outlet filter by rotating the handle by 90°
- The probe body and the area of the connection gland for the heated sample gas line are completely insulated.
- Electronic temperature control up to 200 °C with under/overtemperature alarm and display
- For dust loads up to 2 g/m³, for inlet filter 10 g/m³, and more to approx. 20 g/m³
- This probe is not suitable for use in hazardous areas.
- Can also be ordered with calibration gas connection

Technical specifications

Max. permissible operating pressure	6 bar
Max. permissible operating temperature	200 °C
Material of filter housing and flange	Stainless steel, mat. no. 1.4571
Ball valve material	Stainless steel, mat. no. 1.4408
Mounting flange	DN 65, PN 6, form B
Gaskets	PTFE/Graphite/1.4404 and see filters
Connection of sample gas outlet	1 x female thread ¼ NPT
Power supply	230 V AC, 50/60 Hz, 440 VA
Temperature setting range of controller	50 … 200 °C
Alarm adjustable to	• ± 5 … ± 30 K of setpoint • Factory-set to ± 15 K • Switching current max. 1 A
Degree of protection according to EN 60529	IP54
Ambient temperature range	-20 … +70 °C (can be limited by mounted options)

Selection and ordering data

	Article No.
Gas sampling probe for supply voltage 230 V AC, 2A, 50/60 Hz, with shut-off valve, weatherproof cover, regulated heating with alarm output, and backflushing connection	
Basic version with manual shut-off ball valve, without backflushing, without calibration gas connection	**7MB1943-2FA02**
Basic version with manual shut-off valve, without backflushing, with calibration gas connection 6 mm and non-return valve	**7MB1943-2FA03**
with backflushing for customer controller without heating of the air reservoir, without calibration gas connection	**7MB1943-2FA04**
with backflushing for customer controller without heating of the air reservoir, with calibration gas connection 6 mm and non-return valve	**7MB1943-2FA05**
with backflushing for customer controller and with heated air reservoir, without calibration gas connection	**7MB1943-2FA06**
with backflushing for customer controller and with heated air reservoir, with calibration gas connection 6 mm and non-return valve	**7MB1943-2FA07**

Specification of the probe versions with backflushing on the customer controller:

- Without internal backflushing controller
- Control of the solenoid valve in the compressed air line for backflushing: 24 V DC
- Pneumatic drive for shut-off ball valve: Monostable, unpressurized, open
- With end position switch for pneumatic drive
- With 3/2-way solenoid valve for controlling the pneumatic drive, 24 V DC

© Siemens 2021

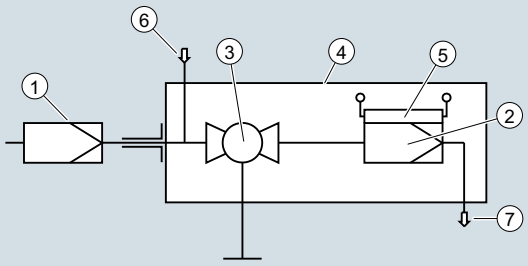

1 Inlet filter with/without extension – not included in scope of supply, must be ordered separately.
2 External filter element – not included in scope of supply, must be ordered separately.
3 Shut-off ball valve – installed in all versions of this probe
4 Weatherproof cover
5 Electric heater, regulated
6 Connection for backflushing
7 Connection for measured gas line (measured gas output)

Diagram of the probe 7MB1943-2FA02

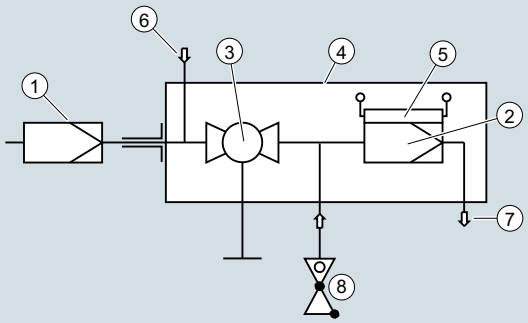

1 Inlet filter with/without extension – not included in scope of supply, must be ordered separately.
2 External filter element – not included in scope of supply, must be ordered separately.
3 Shut-off ball valve – installed in all versions of this probe
4 Weatherproof cover
5 Electric heater, regulated
6 Connection for backflushing
7 Connection for measured gas line (measured gas output)
8 Calibration gas connection 6 mm and non-return valve

Diagram of the probe 7MB1943-2FA03

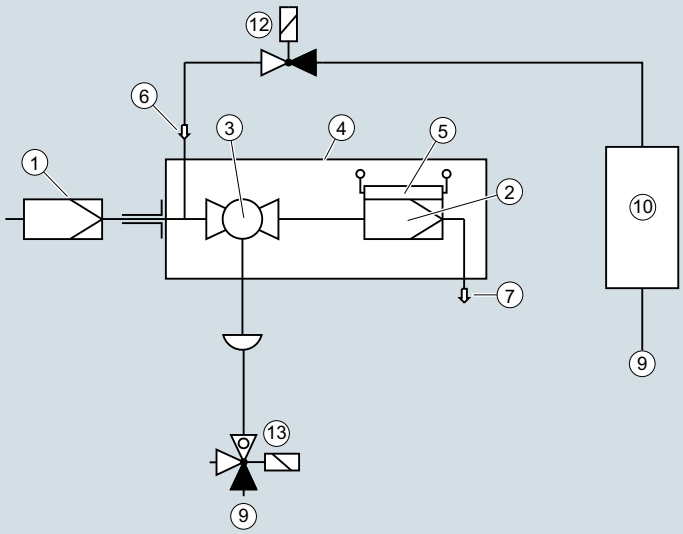

1 Inlet filter with/without extension – not included in scope of supply, must be ordered separately
2 External filter element – not included in scope of supply, must be ordered separately.
3 Shut-off ball valve – installed in all versions of this probe
4 Weatherproof cover
5 Electric heater, regulated
6 Connection for backflushing
7 Connection for measured gas line (measured gas output)
9 Compressed air connection
10 Air reservoir (see dimensional drawing)
12 Control valve for backflushing 24 V DC
13 Control valve for pneumatic drive of the shut-off ball valve 24 V DC

Diagram of the probe 7MB1943-2FA04

© Siemens 2021

Gas sampling probes

Gas sampling probe with external, electrically heated filter

With temperature controller, lockable gas path and backflush connection

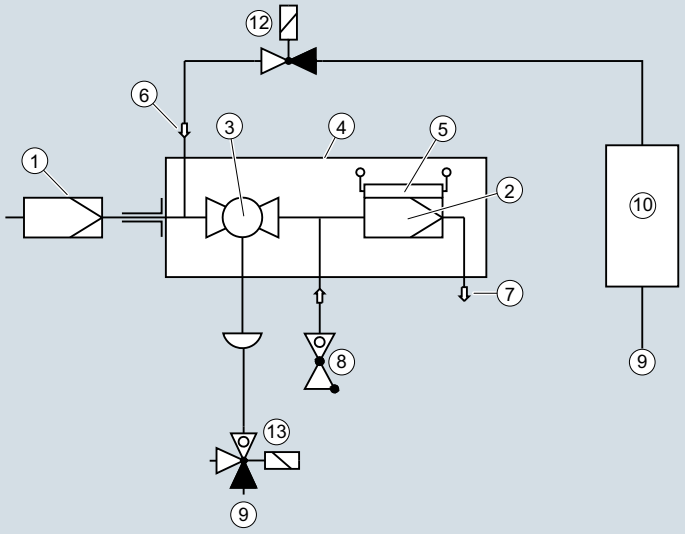

1 Inlet filter with/without extension – not included in scope of supply, must be ordered separately.
2 External filter element – not included in scope of supply, must be ordered separately.
3 Shut-off ball valve – installed in all versions of this probe
4 Weatherproof cover
5 Electric heater, regulated
6 Connection for backflushing
7 Connection for measured gas line (measured gas output)
8 Calibration gas connection 6 mm and non-return valve
9 Compressed air connection
10 Air reservoir (see dimensional drawing)
12 Control valve for backflushing 24 V DC
13 Control valve for pneumatic drive of the shut-off ball valve 24 V DC

Diagram of the probe 7MB1943-2FA05

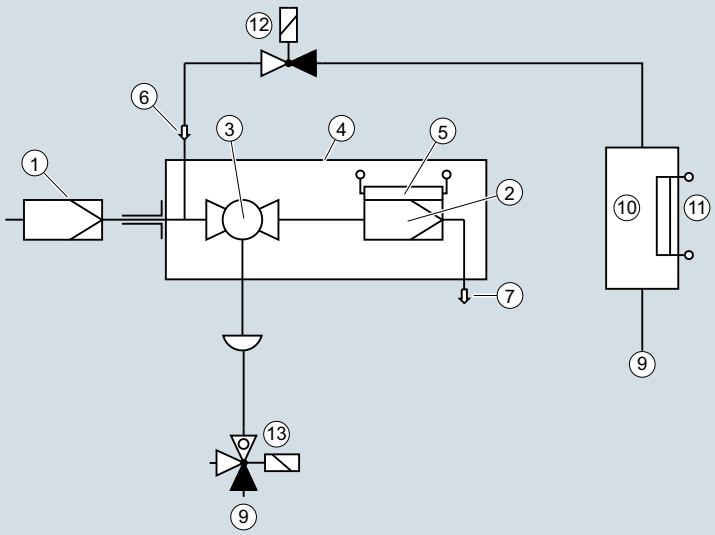

1 Inlet filter with/without extension – not included in scope of supply, must be ordered separately.
2 External filter element – not included in scope of supply, must be ordered separately.
3 Shut-off ball valve – installed in all versions of this probe
4 Weatherproof cover
5 Electric heater, regulated
6 Connection for backflushing
7 Connection for measured gas line (measured gas output)
10 Air reservoir (see dimensional drawing)
11 Self-regulating heater 230 V AC for the air reservoir
12 Control valve for backflushing 24 V DC
13 Control valve for pneumatic drive of the shut-off ball valve 24 V DC

Diagram of the probe 7MB1943-2FA06

© Siemens 2021

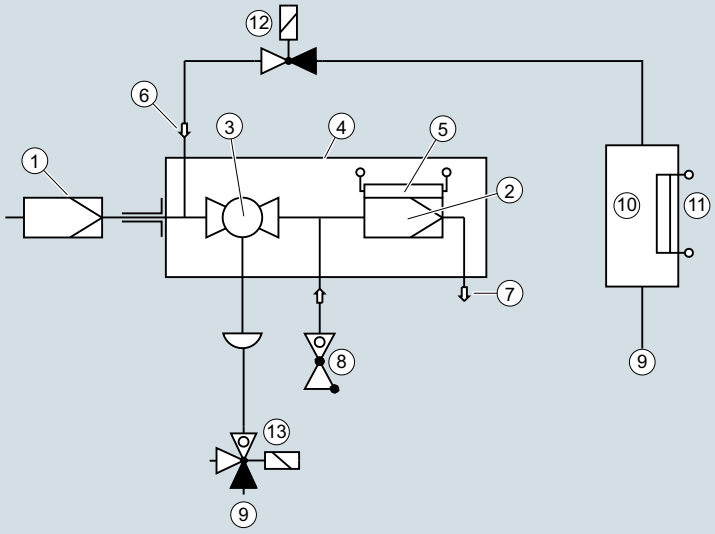

1 Inlet filter with/without extension – not included in scope of supply, must be ordered separately.
2 External filter element – not included in scope of supply, must be ordered separately.
3 Shut-off ball valve – installed in all versions of this probe
4 Weatherproof cover
5 Electric heater, regulated
6 Connection for backflushing
7 Connection for measured gas line (measured gas output)
8 Calibration gas connection 6 mm and non-return valve
9 Compressed air connection
10 Air reservoir (see dimensional drawing)
11 SSelf-regulating heater 230 V AC for the air reservoir
12 Control valve for backflushing 24 V DC
13 Control valve for pneumatic drive of the shut-off ball valve 24 V DC

Diagram of the probe 7MB1943-2FA07

The external filter element, the screw-in fitting for connection of the sample gas line, the inlet filter and optional extension must be ordered separately. Also refer to the configuration example under "Accessories and configuration example".

Dimensional drawings

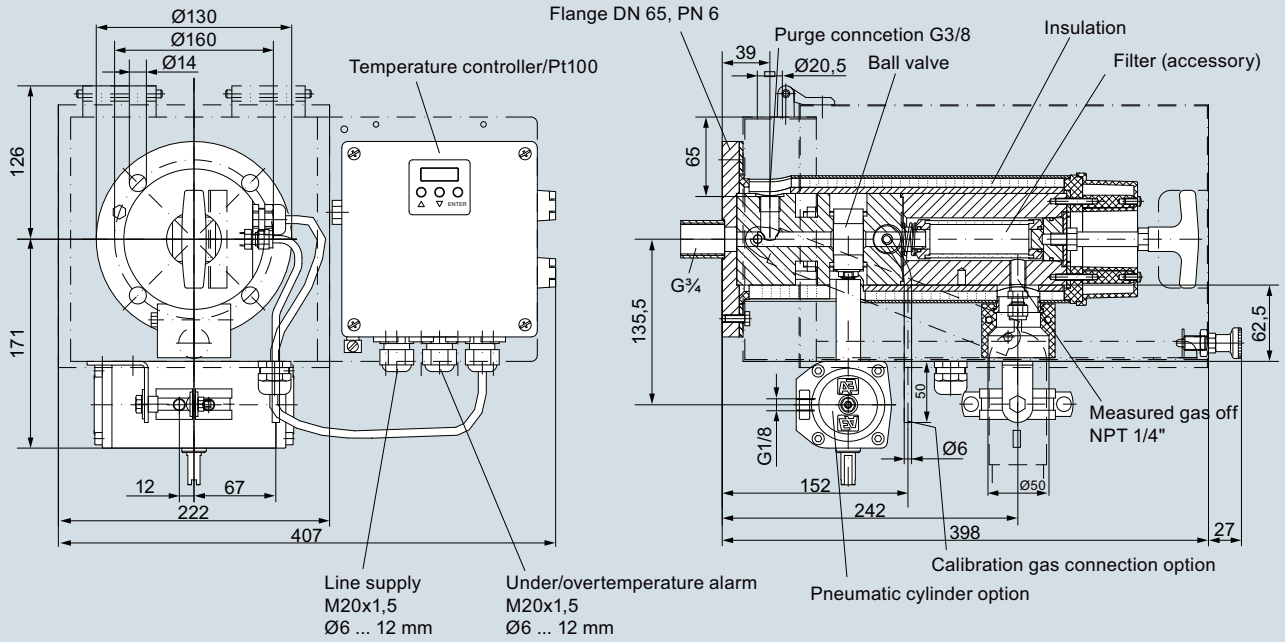

Gas sampling probe with shut-off ball valve, external, electrically heated filter, weatherproof cover and backflushing connection, ball valve

© Siemens 2021

Gas sampling probes

Gas sampling probe with external, electrically heated filter

With temperature controller, lockable gas path and backflush connection

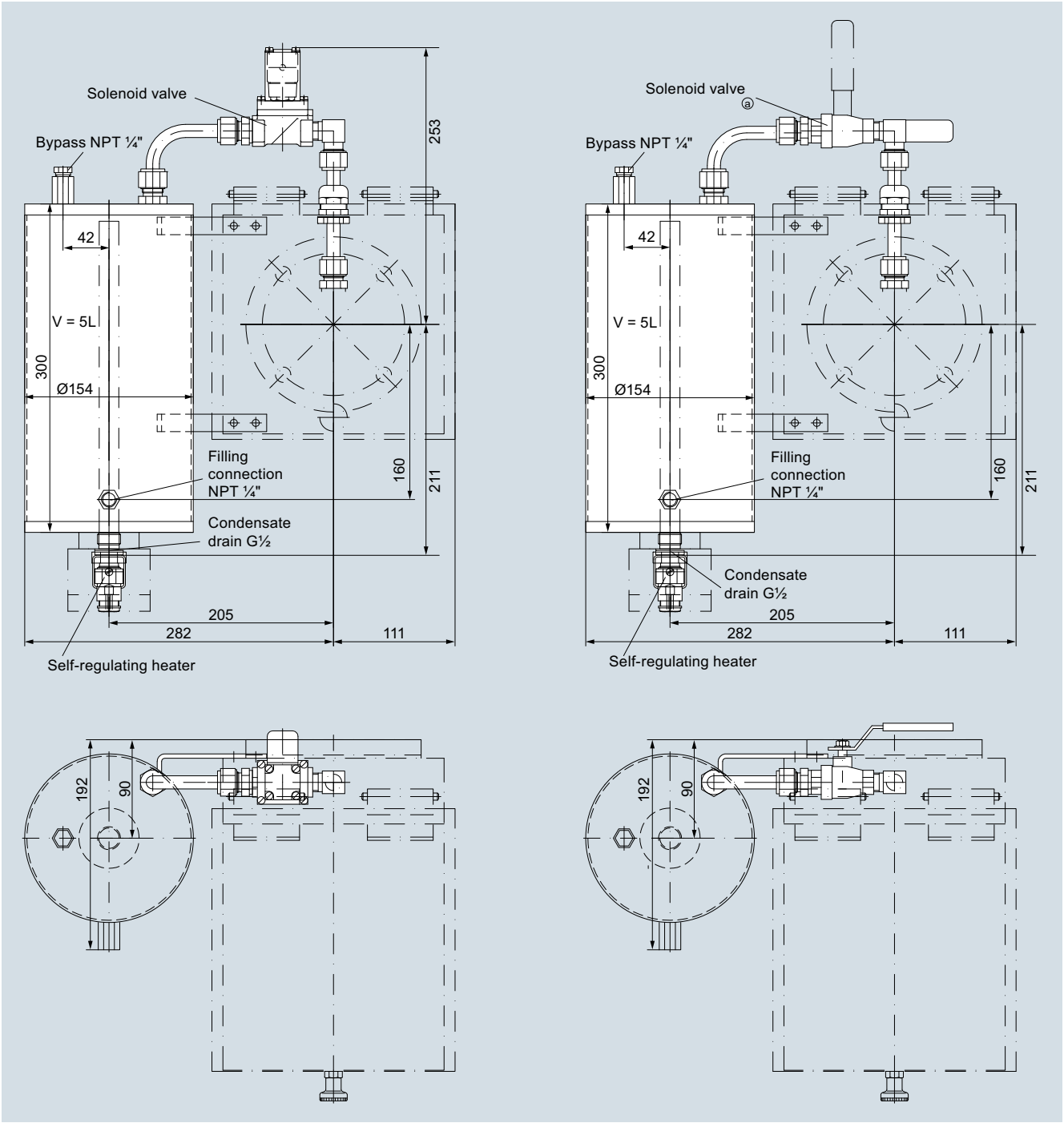

Air reservoir

© Siemens 2021

Design

Depending on the application, a complete gas sampling probe comprises the following elements:

- Inlet filter that extends into the sample gas stream
- Extension for inlet filter
- Sampling pipe
- Probe body
- External filter element (outlet filter)
- Screw-in fitting for connection to the sample gas line

Each component is selected individually. The following table will help you to select the components. In addition to the dust concentration, the temperature and corrosiveness of the media are criteria for selecting the probe components.

Further special versions are available on request as required.

	Dust	Sample gas		Installation		Probe type
	in the sample gas	Wet	Dry	Indoors	Outdoors	
1	< 20 mg/m³		x	x	x	7MB1943-1EA01/02
2	< 2 g/m³	x	x	x		7MB1943-2FA00
3	< 2 g/m³	x	x	x	x	7MB1943-2FA01
4	< 2 g/m³	x	x	x	x	7MB1943-2FB01/02
5	< 20 g/m³	x	x	x	x	7MB1943-2FA02/03/04/05/06/07

Selection table for sampling probes

Selection and ordering data

	Article No.
External filter elements (outlet filter) including O-rings	
Ceramic filter, pore size 3 µm, with O-rings of Viton	**7MB1943-2FE20**
Filter of sintered stainless steel, pore size 5 µm, with O-rings of Viton	**7MB1943-2FE21**
Filter of star-crimped stainless steel fabric, pore size 10 µm, with O-rings of Viton	**7MB1943-2FE22**
Inlet filter	
Up to < 10 g/m³ dust: Filter made of sintered stainless steel, L = 237 mm, connection G¾", wrench size 36, gas temperature up to 600 °C, pore size 5 µm, external diameter 51 mm	**7MB1943-2FE03**
Up to < 20 g/m³ dust: Filter made of sintered stainless steel, L = 538 mm, connection G¾", wrench size 36, gas temperature up to 600 °C, pore size 5 µm, external diameter 60 mm	**7MB1943-2FE04**
For high-temperature applications: Filter made of ceramic/1.4571, L = 478 mm, connection G¾", gas temperature up to 1 000 °C (with oxidizing atmosphere max. 750 °C, with reducing atmosphere max. 600 °C), with adapter flange DN 65, PN 6, pore size 2 µm	**7MB1943-2FE07**
Extensions, unheated Type G¾, pipe of stainless steel 1.4571, at one end G¾ male thread, at the other end G¾ female thread, wrench size 36	
Length 200 mm	**7MB1943-2FA08**
Length 500 mm	**7MB1943-2FA16**
Length 700 mm	**7MB1943-2FA10**
Length 1 000 mm	**7MB1943-2FA11**
Length 1 200 mm	**7MB1943-2FA12**
Length 1 500 mm	**7MB1943-2FA13**

	Article No.
Straight screw-in fitting ¼ NPT	
For connecting a sample gas line with stainless steel fittings to the probe	
• For 6 mm outer diameter	**7MB1943-2DA20**
• For 8 mm outer diameter	**7MB1940-6AA01**
Supporting sleeve for screw-in fitting	
Is required in addition to the screw-in fitting to secure a PTFE hose to the probe	
• Supporting sleeve for 6 mm hose	**7MB1943-2DA10**
• Supporting sleeve for 8 mm hose	**7MB1940-6AB01**
Sampling pipes with male thread G¾ stainless steel	
Sampling pipe made of stainless steel 1.4571, L = 1 000 mm, D = 20 mm, gas temperature up to 600 °C, without connection for inlet filter	**7MB1943-2FE12**
Sampling pipe made of ceramics, L = 1 000 mm, D = 24 mm, gas temperature up to 1 600 °C, without connection for inlet filter	**7MB1943-2FE02**
Sampling pipe made of Inconel 600, L = 1 000 mm, D = 21.3 mm, gas temperature up to 1 050 °C, without connection for inlet filter	**7MB1943-2FE08**
Sampling pipe made of Hastelloy C4, L = 1 000 mm, D = 12 mm, gas temperature up to 400 °C, without connection for inlet filter	**7MB1943-2FE06**
Sampling pipe made of PVDF with demister made of ETFE L = 800 mm, D = 50 mm, gas temperature up to 120 °C, without connection for inlet filter	**7MB1943-2FA14**
Substitute demister made of ETFE	**7MB1943-2FA15**
Substitute O-rings made of Viton for the external filter element (outlet filter), 1 set 1 set comprising: • 1 O-ring 29.82 x 2.62 mm Viton 500 • 2 O-rings 15.54 x 2.62 mm • 1 micro tube, content 0.5 ml, filled with O-ring grease up to 280 °C	**7MB1943-2FE23**
Protection plate Material: Stainless steel Protection plate as mechanical protection for inlet filter	
• For filter 7MB1943-2FE04	**7MB1943-2FE14**

© Siemens 2021

More information

Configuration example

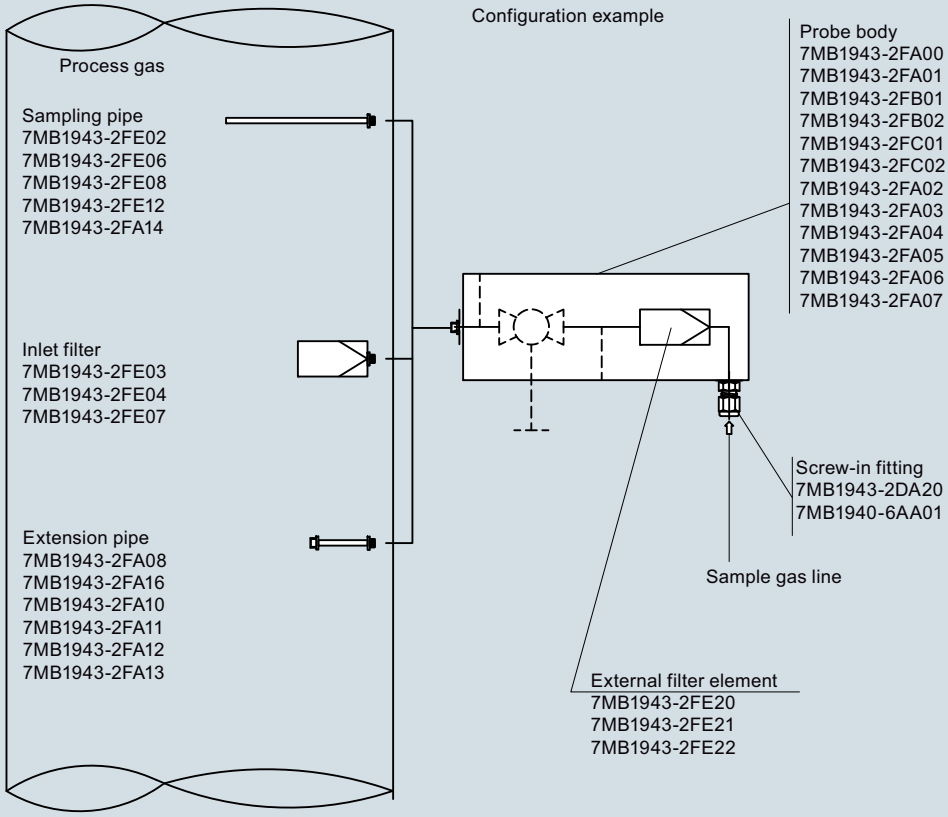

© Siemens 2021

Sample gas pumps



2/2 **Diaphragm pump with metal-free gas ducts**

2/3 **Corrosion-resistant bellows pump**

2/4 **Corrosion-resistant sample gas pump with high capacity**

© Siemens 2021

Application

Suction or pressure driven handling of sample and reference gases. For mounting in analyzer cabinets.

Technical specifications

Pump capacity	See graphic "Diaphragm pump, capacity"
Materials	
• Diaphragm and valve reed	EPDM
• Gas couplings	Polyvinylidene fluoride (PVDF)
• Pump manifold	PVDF
Max. permissible ambient temperature	50 °C
Degree of protection acc. to EN 60529	IP20
Power supply	See ordering data
Power consumption	6.5 VA, approx. 45 mA at 230 V AC, 50 Hz
Weight	Approx. 1.2 kg

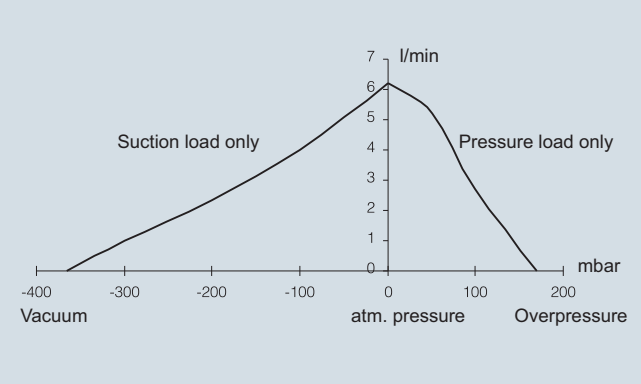

Diaphragm pump, capacity

Selection and ordering data

	Article No.
Diaphragm pump with pump suspension and metal-free gas ducts	
Without enclosure	
• Power supply 230 V AC, 50 Hz	**7MB1943-3AA00**
Set of consumable parts	**7MB1943-3AA04**
(diaphragm, valve reed, and gaskets)	
PVDF fitting for S1 connection	See under "Components for sample preparation/connection elements made of PVDF"
Pump controller	
For mounting on a 35 mm rail	
• 230 V AC	**7MB1943-3AA02**

Dimensional drawings

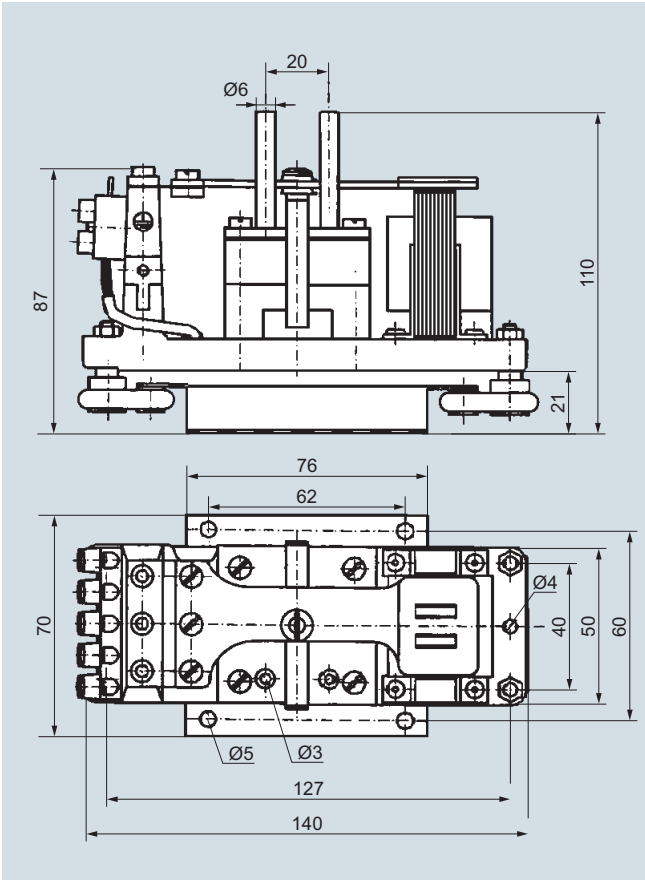

Diaphragm pump with metal-free gas ducts and pump suspension

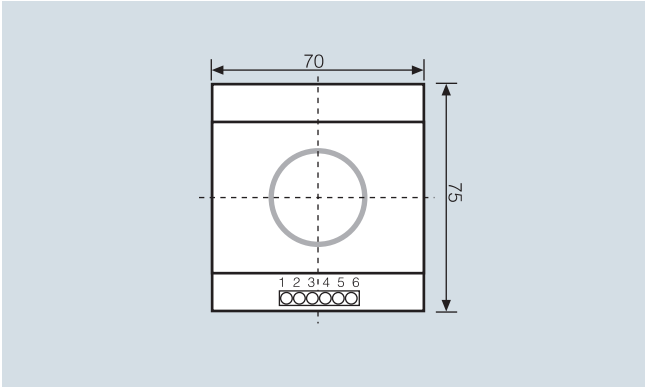

Pump controller

© Siemens 2021

Application

Transportation of corrosive gases at temperatures up to 100 °C.

Special features

- Suitable for continuous operation
- PTFE (Teflon) and PVDF as the wetted parts materials
- Integrated bypass
- Simple, robust design
- Easy to replace valves
- Bellows made of one solid piece
- Pumps sample gases containing condensation
- Long service life

Technical specifications

Pump capacity	• See graphic "Corrosion-resistant bellows pump, capacity" • Adjustable using built-in bypass valve
Operating pressure on the output side	Max. 1.5 bar overpressure
Permissible gas temperature	Max. 100 °C
Permissible ambient temperature	Max. 60 °C
Degree of protection acc. to EN 60529	• IP55 (electrical) • IP20 (mechanical)
Power supply	Either 230 V AC or 115 V AC; see ordering data
Connection	• For PTFE hose DN 4/6 (with 230 V AC version) • For PTFE hose ¼" (with 115 V AC version)
Dimensions	See dimensional drawing
Weight	6.5 kg
Scope of delivery	• 1 x sample gas pump with motor • 4 x rubber/metal buffer • 1 x motor console made of 1.4301
Parts wetted by medium	PTFE (Teflon) and PVDF

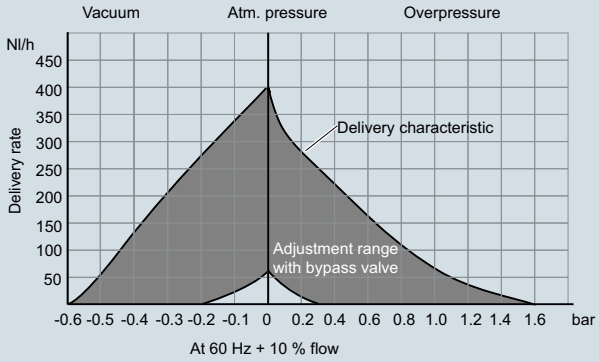

Corrosion-resistant bellows pump, capacity

Selection and ordering data

	Article No.
Corrosion-resistant bellows pump with pump support	
• Power supply 230 V AC, 50/60 Hz; 0.85/0.8 A	**7MB1943-3CA10**
• Power supply 115 V AC, 50/60 Hz; 1.7/1.6 A	**7MB1943-3CA20**
Spare parts	
Valve (2 units required), material: PTFE/PVDF	**7MB1943-3CA15**
PTFE bellows, complete	**7MB1943-3CA16**
Eccentric and plunger with ball bearing	**7MB1943-3CA17**

Further pump versions, also with head made of stainless steel 1.4571, are available on request.

Dimensional drawings

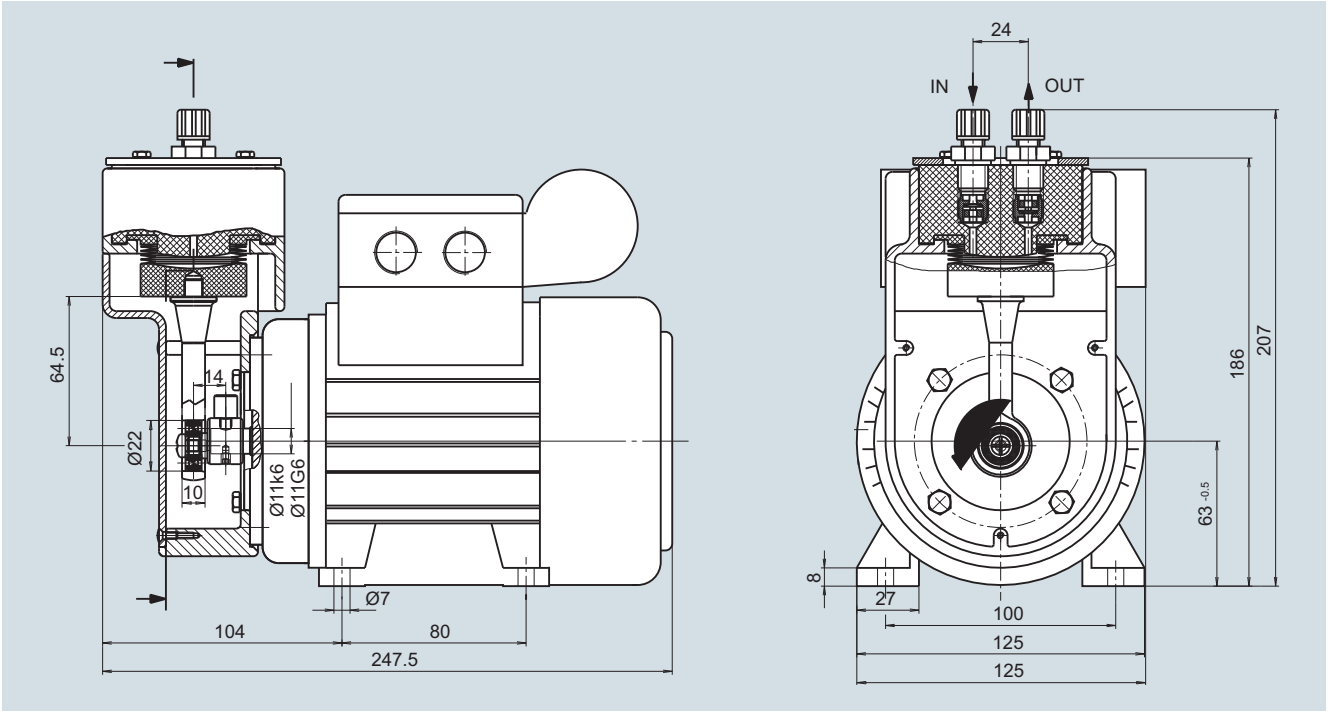

Corrosion-resistant bellows pump

© Siemens 2021

Application

Transportation of corrosive gases at temperatures up to 40 °C with large volume flows.

Special features

- High capacity
- Capacity adjustable using built-in bypass valve
- Pump head pointing downwards with gas inlet and outlet from below
- Suitable for continuous operation
- Parts wetted by medium made of PTFE and FFPM
- Diaphragm pump

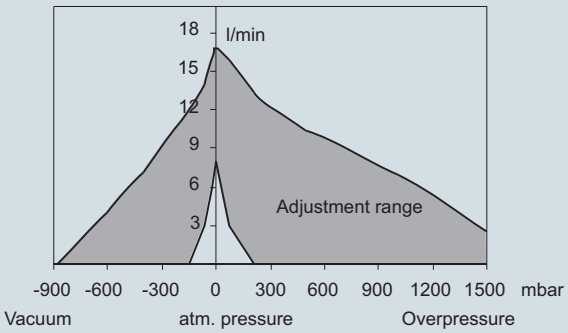

Corrosion-resistant sample gas pump, capacity

Technical specifications

Capacity at atmospheric pressure of pump without explosion protection 7MB1 943-3CB01	Adjustable from 402 … 960 l/h at standard temperature and pressure
Capacity at atmospheric pressure of pump in explosion-proof design 7MB1 943-3CB11	Adjustable from 402 … 780 l/h at standard temperature and pressure
Final vacuum	125 mbara
Max. operating overpressure on the output side	1.5 barg
Temperature of medium	5 ... 40 °C
Permissible ambient temperature	5 ... 40 °C
Gas connection	R¼"
Supply voltage	230 V AC, 50 Hz
Parts wetted by medium	
• Head parts	PTFE
• Membrane	PTFE-coated
• Valves	FFPM
EU Type-Test Certificate of motor with explosion-proof design 7MB1943-3CB11	EX5 02 08 45055 002

Selection and ordering data

	Article No.
Corrosion-resistant sample gas pump	
Degree of protection IP44, with pump holder	**7MB1943-3CB01**
Corrosion-resistant sample gas pump, explosion-proof version	
Degree of protection IP44, with pump holder; EEx e II T3 to ATEX	**7MB1943-3CB11**
Spare parts	
Diaphragm	**7MB1943-3CB17**
Valve reed	**7MB1943-3CB18**

Further pump versions available on request.

Please note:
Motors in the hazardous area require approved protective equipment (motor circuit-breaker) which is not included in the scope of delivery.

Dimensional drawings

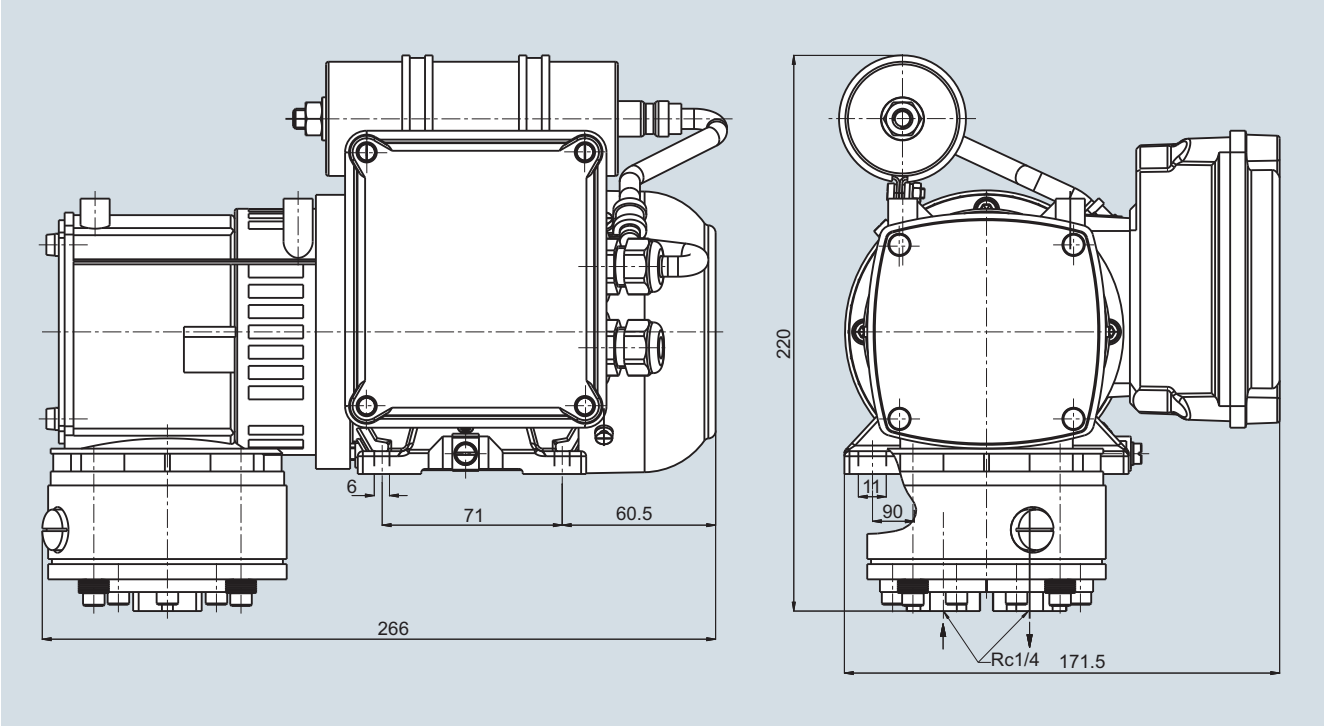

Corrosion-resistant sample gas pump, explosion-proof design

© Siemens 2021

Heated sample gas lines



3/2 **Temperature-controlled, heated sample gas lines**

Non-replaceable Teflon core

3/2 Max. 120 °C, can be shortened

3/3 Max. 200 °C

3/4 Max. 190 °C, for FIDAMAT total hydrocarbon analyzer

3/5 **Temperature-controlled, heated sample gas filter**

3/5 Max. 180 °C, for FIDAMAT total hydrocarbon analyzer

© Siemens 2021

Heated sample gas lines

Temperature-controlled, heated sample gas lines
Non-replaceable Teflon core

Max. 120 °C, can be shortened

Design

Internal hose	PTFE hose, 200 mm at both ends unheated, protruding, for ferrule
Hose connection and termination	Silicone end cap
Heating	Heating band, routed in parallel
Thermal insulation	Thermo-fleece (CFC-free, flame retardant)
Outer sheath	Polyamide corrugated hose PA12 black, waterproof, flame retardant acc. to UL94 HB, thermally stable from -50 … +120 °C, short-term +150 °C
Temperature sensor	Pt100 in 2-wire system
Heat conductor/PE conductor	Copper braiding
Power supply connection	Power supply and sensor cables with common outlet, end sleeves, l = 3 000 mm
Implemented tests	acc. to VDE 0721 Part 1 • High-voltage test • Insulation resistance test

Technical specifications

Max. permissible operating temperature	
• Switched on	120 °C
• Switched off	200 °C
Max. length of heating circuit	100 m
Max. production length	100 m
Distance between contacts	0.6 m
Safety class	I
Degree of protection	IP54
Outer diameter	Approx. 43 mm
Smallest bending radius	300 mm
Max. permissible operating pressure	6 bar for DN(NW)4, 4 bar for DN(NW)6; at 200 °C
Power supply	230 V AC, 50 Hz
Rated power	40 W/m
Weight (heating hose)	Approx. 0.8 kg/m

Dimensional drawings

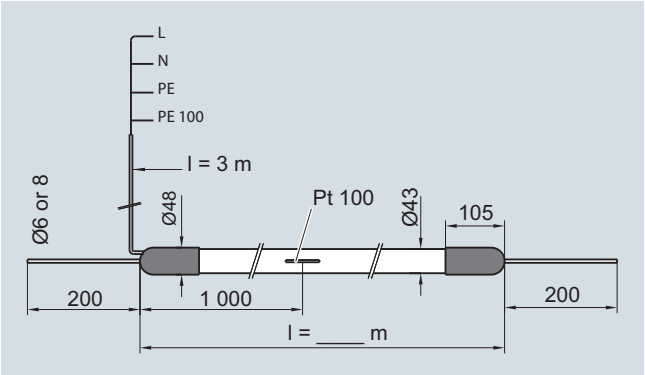

Temperature-controlled, heated sample gas line for operating temperatures up to max. 120 °C, non-replaceable Teflon core, can be shortened

Selection and ordering data

Note

The complete ordering data for a heated sample gas line must include both items I and II.

	Article No.
Item I	
Preassembled pack for temperature-controlled, heated sample gas line for operating temperatures up to 120 °C; can be shortened (delivery unit 1 line)	**7MB1943-2AB13**
Both ends preassembled, with PTFE hose	
Non-replaceable Teflon core, with 1 Pt100 temperature sensor	
Item II	
Length-dependent data (delivery unit 1 m)	
Outer sheath Polyamide corrugated hose (PA12)	
Hose	
• PTFE hose 4/6 mm	**7MB1943-2AB10**
• PTFE hose 6/8 mm	**7MB1943-2AB12**
Temperature-controlled, heated sample gas line for operating temperatures up to 120 °C; can be shortened	
Neither end preassembled, with PTFE hose, with 1 Pt100 temperature sensor	
Outer sheath Polyamide corrugated hose (PA12)	
Hose	
• PTFE hose 4/6 mm	**7MB1943-2AB14**
• PTFE hose 6/8 mm	**7MB1943-2AB16**
Preassembled pack for connection of heated sample gas line (cabinet end)	**7MB1943-2AB20**
Comprising: • 1 silicon end cap • 1 connections set for heating band • 1 Pt 100 temperature sensor	
Preassembled pack for connection of heated sample gas line (sampling end)	**7MB1943-2AB22**
Comprising: • 1 silicon end cap • 1 connections set for heating band	
Temperature-resistant adhesive tape (33 m)	**7MB1943-2AB24**
Note: 10 m are required to assemble a hose	
Silicone adhesive (1 tube)	**7MB1943-2AB26**
Note: Half a tube is required to assemble a hose	
Recommended temperature controller	**3RS1042-1GW70**

© Siemens 2021

Design

Internal hose (type)	Hose with Teflon (PTFE) core, stainless steel braiding
Connection fittings at inlet and outlet	Connection sleeves RSL at both ends, mat. no. 1.4571, for ferrule
Hose connection and termination	Silicone end cap
Heat conductor	Moisture-proof, PTFE isolated, braided by PE conductor
Thermal insulation	Thermo-fleece (CFC-free, flame retardant)
Outer sheath	Polyamide corrugated hose PA12 black, waterproof, flame-retardant acc. to UL94 HB
• Ambient temperature	-40 °C … +105 °C
Power supply connection	Power supply and sensor cables with common outlet, end sleeves, l = 3 000 mm
Implemented tests	acc. to VDE 0721 Part 1 • High-voltage test • Insulation resistance test

Technical specifications

Max. permissible operating temperature	200 °C
Max. length of heating circuit	54 m
Max. production length	54 m
Safety class	I
Degree of protection	IP54
Smallest bending radius	300 mm
Max. permissible operating pressure	30 bar
Power supply	230 V AC, 50 Hz
Rated power	100 W/m
Weight (heating hose)	Approx. 0.8 kg/m

Dimensional drawings

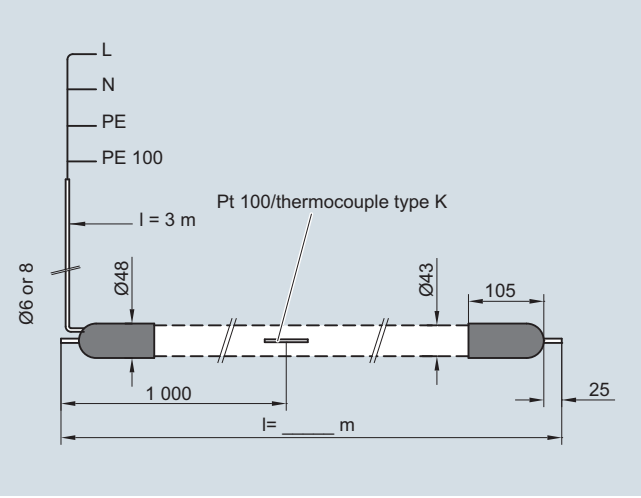

Temperature-controlled, heated sample gas line for operating temperatures up to max. 200 °C, non-replaceable Teflon core

Selection and ordering data

Note

The complete ordering data for a heated sample gas line includes items 1 and 2.

	Article No.
Item 1a	
Preassembly for temperature-controlled, heated sample gas line for operating temperatures up to 200 °C (delivery unit 1 unit) Non-replaceable Teflon core, with 1 Pt100 temperature sensor in 2-conductor system	**7MB1943-2BA00**
Item 1b	
Special version for Gasmet CEMS FTIR	
Preassembly for temperature-controlled, heated sample gas line for operating temperatures up to 200 °C (delivery unit 1 unit) Non-replaceable Teflon core, with 1 thermocouple type K Ni-CrNi without silicon end cap on the electrical connection side	**7MB1943-2BA04**
Item 2	
Length-dependent data (delivery unit 1 m)	
Outer sheath Polyamide corrugated hose (PA12)	
Hose	
• PTFE hose 4/6 mm	**7MB1943-2AA01**
• PTFE hose 6/8 mm	**7MB1943-2AA02**
Temperature sensor mounting point Measured from the electrical connection side (standard) or specified in plain text:	Sensor 1: 1 m Sensor 1: ..... m
2. temperature sensor	On request
2. heating circuit	On request
Recommended temperature controller for Pt100	**3RS1042-1GW70**

Ordering example

The following is required:

Temperature-controlled, heated sample gas line for operating temperatures up to 200 °C, with straight connection fittings at both ends, outer sheath made of corrugated hose PA12, PTFE hose 4/6 mm, 10 m long, Pt100

Order as follows:

7MB1943-2BA00 + 10 x 7MB1943-2AA01

3

© Siemens 2021

Heated sample gas lines

Temperature-controlled, heated sample gas lines
Non-replaceable Teflon core

Max. 190 °C, for FIDAMAT total hydrocarbon analyzer

Design

Internal hose	PTFE hose, single stainless steel braiding
Connection fittings at inlet and outlet	Connecting sleeves RSL at both ends, mat. no. 1.4571
Hose connection and termination	Silicone end cap
Heat conductor	PTFE-insulated with PE braiding, moisture-proof
Thermal insulation	Thermo-fleece (CFC-free, flame retardant), silicone foam hose as sheath
Temperature sensor	Pt100 in 2-wire system
Power supply connection	Power supply and sensor cables with common outlet, l = 3 000 mm, silicone protective hose, end sleeves
Implemented tests	acc. to VDE 0721 Part 1 • High-voltage test • Insulation resistance test

Technical specifications

Max. permissible operating temperature	190 °C
Max. production length	5 m
Safety class	I
Degree of protection	IP54
Outer diameter	Approx. 33 mm
Smallest bending radius	200 mm
Max. permissible operating pressure	10 bar
Power supply	230 V AC, 50/60 Hz
Rated power	100 W/m
Only for indoor use	

Selection and ordering data

Note

The complete ordering data for a heated sample gas line must include both items I and II.

	Article No.
Item I	
Preassembly for temperature-controlled, heated sample gas line for operating temperatures up to 190 °C (delivery unit 1 unit)	
Non-replaceable Teflon core, with 1 Pt100 temperature sensor, at analyzer end with right-angled sample gas outlet	
• For PTFE hose 4/6 mm	**7MB1943-2AA74**
• For PTFE hose 6/8 mm	**7MB1943-2AA75**
Item II	
Length-dependent data (Minimum length 0.5 m – can be ordered in 0.1 m increments)	
Model a	**7MB1943-2AA76**
Outer sheath: silicone foam hose Hose: PTFE hose 4/6 mm	
Model b	**7MB1943-2AA77**
As model a, except hose: PTFE hose 6/8 mm	
Recommended temperature controller	**3RS1042-1GW70**

Dimensional drawings

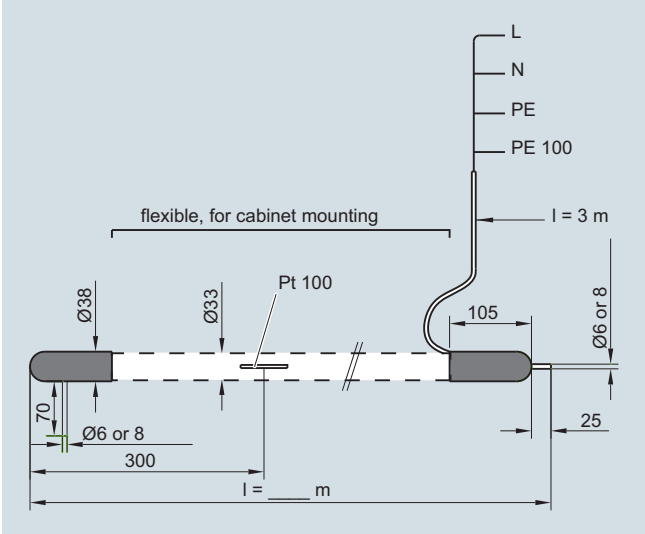

Temperature-controlled, heated sample gas line for operating temperatures up to max. 190 °C, non-replaceable Teflon core (for FIDAMAT total hydrocarbon analyzer)

© Siemens 2021

Application

The electrically heated filter separates off solids occurring in analysis techniques up to a maximum operating temperature of 180 °C. It offers an additional unheated and filter-free outlet for cold measurements.

Design

The universal filter made of temperature-resistant PTFE with integrated filter element is located in a two-part aluminum body. The temperature is controlled by means of a heating cartridge and an adjustable thermostat including overtemperature limiter and undertemperature alarm at 30 °C above and below the reference temperature respectively. The switching element of the thermostat as well as the electrical terminals are located in a junction box. The operating temperature of the filter is displayed on a thermometer. For thermal insulation reasons and as protection against accidental contact, the heated filter part is covered by an insulated cap. To prevent cold points, the connection glands are also heated. The pipe clamps present on both sides serve to support the hoses. The unheated output is located upstream of the filter element in the gas flow direction. Depending on the requirements, the cold gas stream therefore needs to be filtered in the cold sample conditioning system.

Technical specifications

Max. permissible operating temperature	180 °C
Max. permissible ambient temperature	50 °C
Degree of protection	IP44
Filter material	PTFE
Filter fineness	2 µm
Dead volume	65 cm^3
Filter surface	70 cm^2
Max. permissible operating pressure	4 bar
Power supply	230 V AC, 50 Hz
Rated power	350 VA
Type of mounting	Wall mounting

Selection and ordering data

	Article No.
Electrically heated sample gas filter up to max. 180 °C "FIDAMAT"	
Gas inlet on left	**7MB1943-2AA80**
Gas inlet on right	**7MB1943-2AA81**
Replacement filter element	
Made of PTFE, fineness 2 µm	**7MB1943-2AA14**

Dimensional drawings

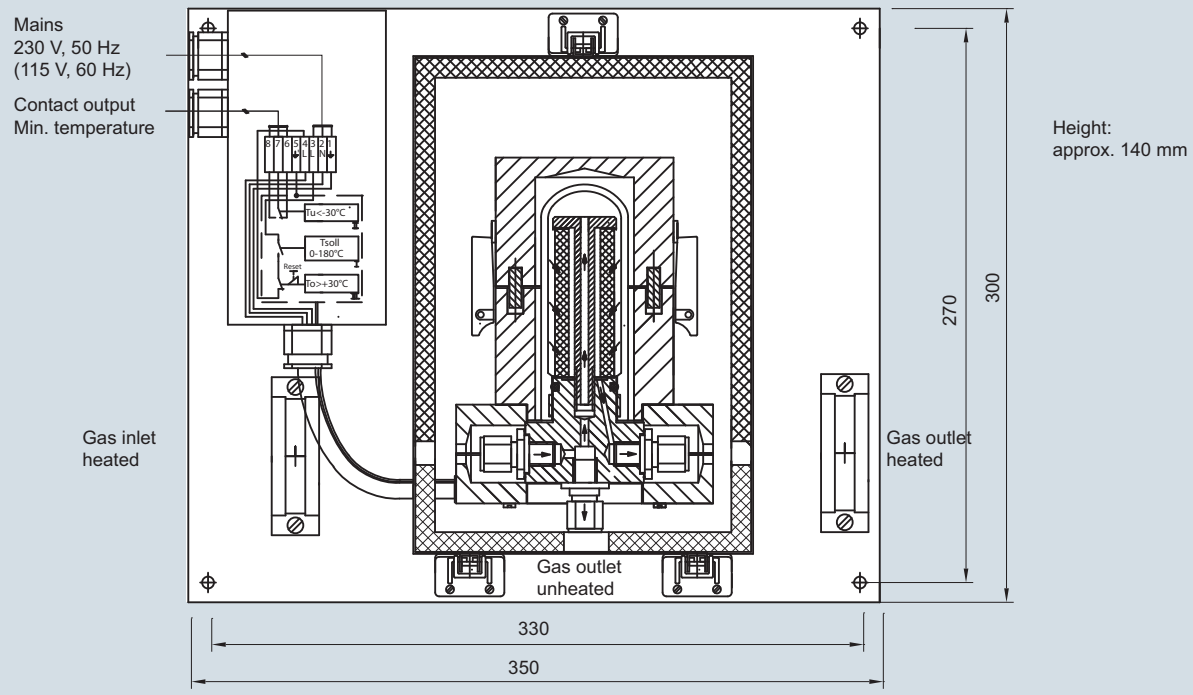

Temperature-controlled, heated sample gas filter for operating temperatures up to max. 180 °C, gas inlet on left (for FIDAMAT total hydrocarbon analyzer)

© Siemens 2021

Max. 180 °C, for FIDAMAT total hydrocarbon analyzer

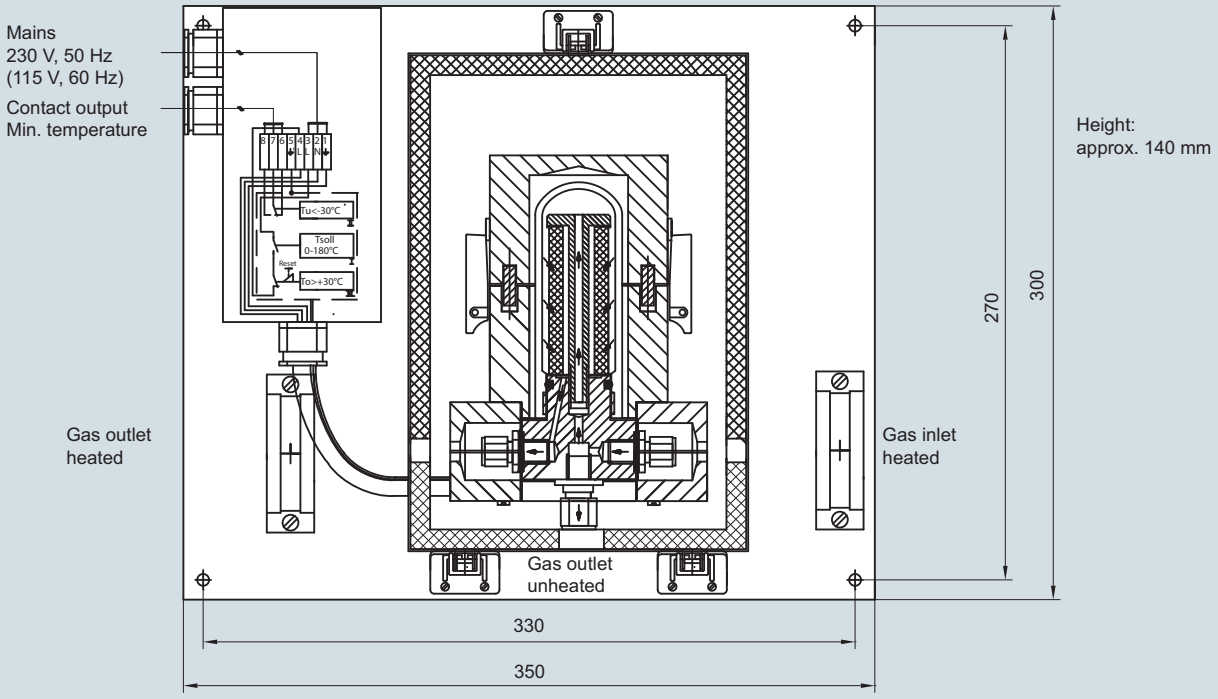

Temperature-controlled, heated sample gas filter for operating temperatures up to max. 180 °C, gas inlet on right (for FIDAMAT total hydrocarbon analyzer)

© Siemens 2023

Components for sample preparation

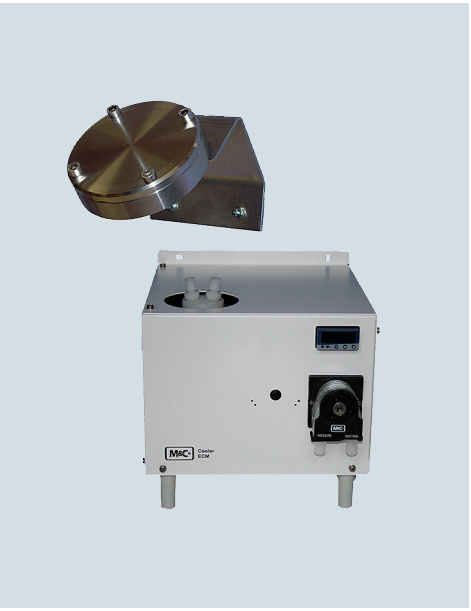

4/2 Filters
4/2 Room air filter
4/3 Front mounting filter
4/4 Coalescence filter
4/6 Universal filter
4/8 Moisture sensor and wiring modules

4/10 Condensation trap with PP enclosure

4/11 Coupling relay with direct wiring of a sample gas pump

4/12 Condensation removal
4/12 Condensation tank
4/13 Hose pump for condensation removal

4/14 Gas coolers
4/14 Compressor gas coolers

4/21 Valves and shut-off valves
4/21 Needle valve made of PVDF
4/22 Shut-off and multiway ball valves made of PVDF

4/23 Solenoid valves
4/23 2/2-way solenoid valve made of PVDF, pivoted-armature valve
4/24 3/2-way solenoid valve made of PVDF, pivoted-armature valve

4/25 Flowmeters
4/25 Glass flowmeter
4/26 Isolated switch amplifier

4/27 Pressure reducers
4/27 Single-stage pressure reducer for calibration gas cylinders
4/28 Two-stage pressure reducer for calibration gas cylinders

4/29 NO_2-NO converter

4/31 Fittings
4/31 Fittings made of PVDF and teflon

© Siemens 2023

Room air filter

Application

The room filter filters the ambient air and separates dust present in the air down to a particle size of approx. 20 µm.

Technical specifications

Filter element	Paper, 20 µm (non-replaceable)
Material (enclosure)	Polyamide (natural colors)
Max. permissible operating temperature	100 °C
Connection	Connecting sleeves, 6 mm diameter

Selection and ordering data

	Article No.
Room air filter	**C79127-Z400-A1**

Dimensional drawings

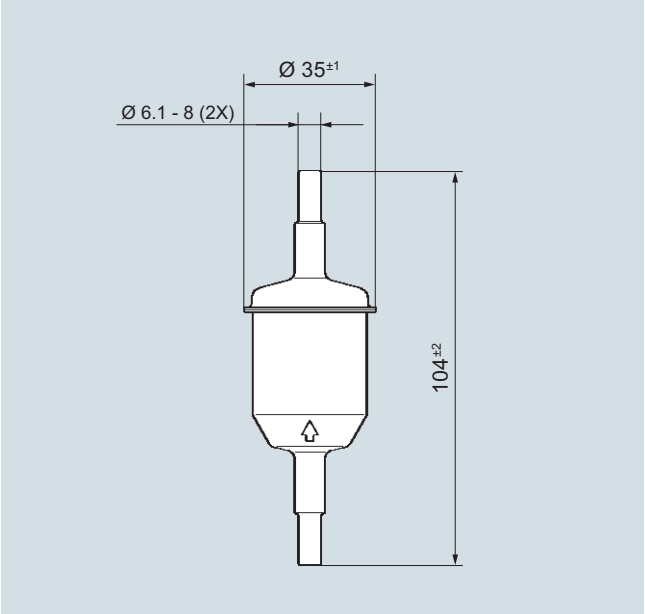

Room air filter

© Siemens 2023

Application

For mounting in panels or cabinets.

Technical specifications

Filter fineness (pore size)	0.1 µm
Filter surface	50 cm^2
Max. operating pressure	4 bar
Max. permissible ambient temperature	80 °C
Max. permissible sample gas temperature	80 °C
Dead volume	30 ml
Sample gas connections	G1/8
Type of mounting	Fitting in front panel
Material of parts wetted by the sample gas	PVDF, glass, Viton
Weight	280 g

Selection and ordering data

	Article No.
Front mounting filter With glass-fiber filter element 0.1 µm	**7MB1943-2CA30**

Consumables

	Article No.
Glass-fiber filter element 0.1 µm	**7MB1943-2CA32**

Dimensional drawings

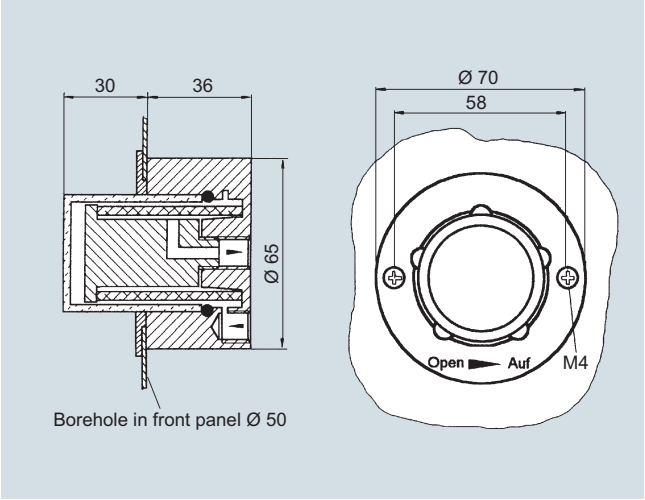

Front mounting filter

© Siemens 2023

Coalescence filter

Application

For mounting in sample conditioning systems.

Design

To remove aerosols (fine drops of liquid) from the gas stream.

The collected condensation is drained in the case of pressurized systems via automatic condensation drain valves, or in the case of vacuum systems via hose pumps.

Caution!
Condensation can be corrosive. Observe the accident prevention regulations and other directives.

The coalescence filter comprises:

- Filter head (PVDF)
- Filter bubble (Duran glass)
- Gasket material (Viton)

Special features

- User-friendly and unique quick-release connection, allows extremely simple and rapid replacement of the filter element without tools
- Additional connection in filter head (G ¼") for moisture sensor or bypass
- Connection of automatic condensation drains possible

For use in hazardous areas

The filters comply with the basic safety requirements of directive 94/9/EC and are thus suitable for use in hazardous areas (Zone 1, Group IIB). Non-flammable gases and flammable gases of Group IIB or IIC (which can be occasionally explosive in normal operation, Zone1) can be passed through the filters depending on the filter element used.

The information in the associated Operating Instructions must be observed!

Technical specifications

Coalescence filter	
Gas connections	Inlet and outlet, 2 x G¼ female thread diagonally opposite on side
Sample gas pressure	Max. 4 bar
Filter surface	28 cm^2
Dead volume	73 ml
Type of mounting	Wall mounting
Operating temperature	Max. 100 °C
Weight	Approx. 0.24 kg

Selection and ordering data

	Article No.
Coalescence filter With filter insert made of borosilicate fiber	**7MB1943-2AC12**

Accessories

	Article No.
Filter insert Made of borosilicate fiber (1 unit)	**7MB1943-2AC13**

© Siemens 2023

Dimensional drawings

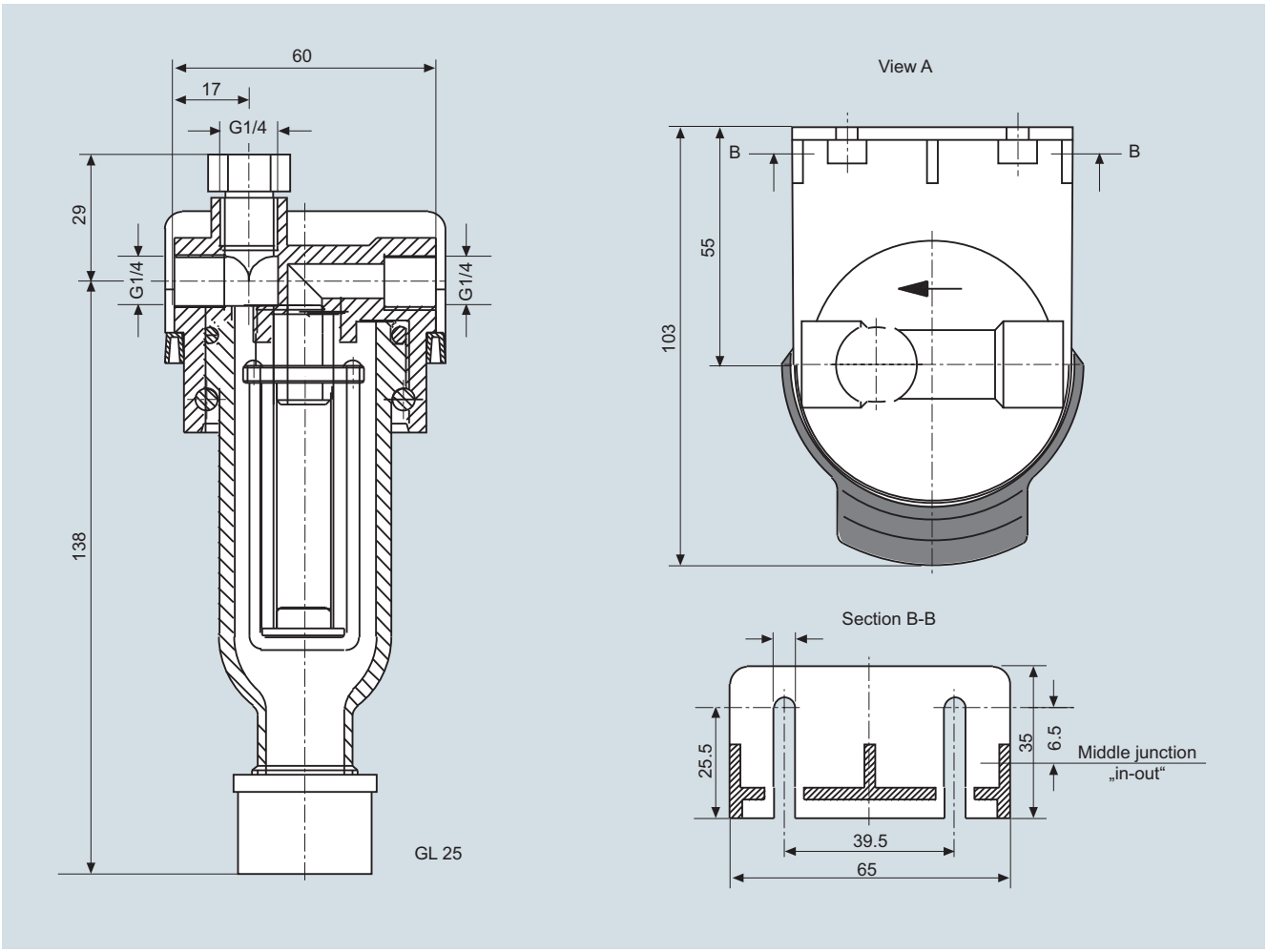

Coalescence filter

© Siemens 2023

Universal filter

Application

For mounting in sample conditioning systems.

Design

The universal filter with quick-release fastener has a filter mesh of 2 µm. The quick-release fastener means that the PTFE or glass-fiber filter insert can be easily changed. Dry dusts are filtered out reliably, and a moisture sensor can be installed on request. The filter insert can be easy checked through the transparent housing.

Special features

- User-friendly and unique quick-release connection, allows extremely simple and rapid replacement of the filter element without tools
- Low dead volume
- Additional connection in filter head (G ¼") for moisture sensor, bypass or vent

For use in hazardous areas

The filters comply with the basic safety requirements of directive 94/9/EC and are thus suitable for use in hazardous areas (Zone 1, Group IIB). Non-flammable gases and flammable gases of Group IIB or IIC (which can be occasionally explosive in normal operation, Zone1) can be passed through the filters depending on the filter element used.

The information in the associated Operating Instructions must be observed!

Technical specifications

Gas connections	Inlet and outlet, 2 x G¼ female thread diagonally opposite on side
Sample gas pressure	Max. 4 bar
Filter surface	
• Glass fiber	80 cm^2
• Teflon (PTFE)	60 cm^2
Dead volume	57 ml
Type of mounting	Wall mounting
Operating temperature	Max. 100 °C
Materials	
• Filter head	PVDF
• Enclosure	Duran glass
• Gasket	Viton
Weight	Approx. 0.30 kg

Selection and ordering data

	Article No.
Universal filter	
For filter insert made of glass fibers, pore size 2 µm	**7MB1943-2AC00**
For filter insert made of Teflon, pore size 2 µm	**7MB1943-2AC01**

Accessories and consumables

	Article No.
Filter inserts (per 5 units)	
Made of glass fiber, pore size 2 µm, matching 7MB1 943-2AC00	**7MB1943-2AC10**
Made of Teflon, pore size 2 µm, matching 7MB1 943-2AC01 (filter insert cannot be combined)	**7MB1943-2AC11**

© Siemens 2023

Dimensional drawings

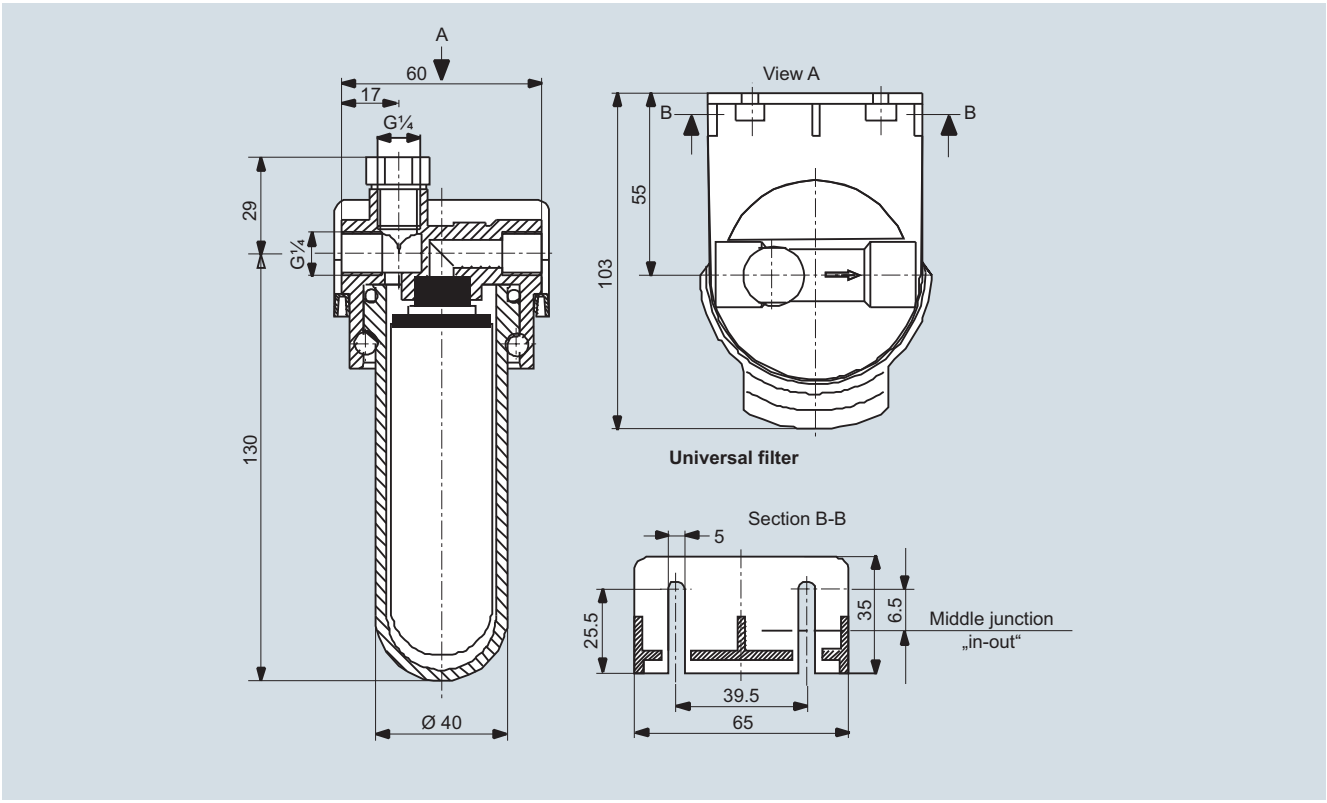

Universal filter

© Siemens 2023

Moisture sensor and wiring modules

Application

The moisture sensor is used to signal the penetration of moisture in sample gas treatment systems in order to prevent the damaging of measuring cells by condensation. It is fitted in the gas stream and already responds to low quantities of moisture; it therefore is not dependent on an accumulation of condensation. Once the fault has been eliminated, the moisture sensor is immediately dried by the flow of gas. It is maintenance-free.

The moisture sensor is connected to a wiring module with which the sample gas pump can be switched off and an alarm signal triggered. Once the sample gas has passed the moisture sensor, it first flows through the filter housing before reaching the analyzer. This buffer provides an additional safety period for a response by the wiring module if the sensor detects moisture. There are three different wiring modules for selection depending on the conditions of use.

Design

The moisture sensor can be used together with the universal filter, the coalescence filter, or with flow adapters. Together with the wiring module, the moisture sensor has an open-circuit monitoring function.

For use in hazardous areas

The moisture sensor can only be used in the ATEX area together with the associated wiring module with intrinsically-safe output (II 2G EEx ib IIC T5). The wiring module itself must be installed in a non-hazardous environment.

Technical specifications

Max. permissible operating temperature	50 °C	
Max. permissible operating pressure	2 bar; other version for higher pressure on request	
Cable length (moisture sensor)	4 m	
Materials	PVDF, stainless steel 1.4571, epoxy resin	
Weight	Approx. 0.1 kg	
Wiring modules	• With intrinsically-safe output for applications according to ATEX • Rail mounting	• Non-Ex applications in accordance with IEC General Purpose • Rail mounting
Power supply	230 V AC or 115 V AC 48 … 62 Hz	24 V DC ±10 %
Ex protection class	II(1)G [EEx ia] IIC	-
Ex certificate	TÜV 00 ATEX 1604	-
Max. cable length	70 m	4 m
Degree of protection acc. to EN 60529		
• Device	IP40	IP40
• Terminal strip	IP20	IP20
Operating temperature	-25 ... +60 °C	-20 ... +60 °C
Type of mounting	DIN rail 35 mm	DIN rail 35 mm
Dimensions (H x W x D) in mm	99 x 22.5 x 120	75 x 70 x 109
Weight	Approx. 0.2 kg	Approx. 0.2 kg

Selection and ordering data

	Article No.
Moisture sensor	
Cable length 4 m, connection G¼	**7MB1943-2AC51**
Wiring modules	
With intrinsically-safe output for applications according to ATEX	
• For 1 moisture sensor, power supply 230 V AC, 48 … 62 Hz	**7MB1943-2AC40**
• For 1 moisture sensor, power supply 115 V AC, 48 … 62 Hz	**7MB1943-2AC41**
For use in accordance with IEC General Purpose	
• For max. 2 moisture sensors, power supply 24 V DC	**7MB1943-2AC42**
Flow adapter	
Made of PVDF, for moisture sensor for installation in sample gas line	**7MB1943-2AC06**
Made of stainless steel 1.4571, for installation in piping	**7MB1943-2AC43**

© Siemens 2023

Dimensional drawings

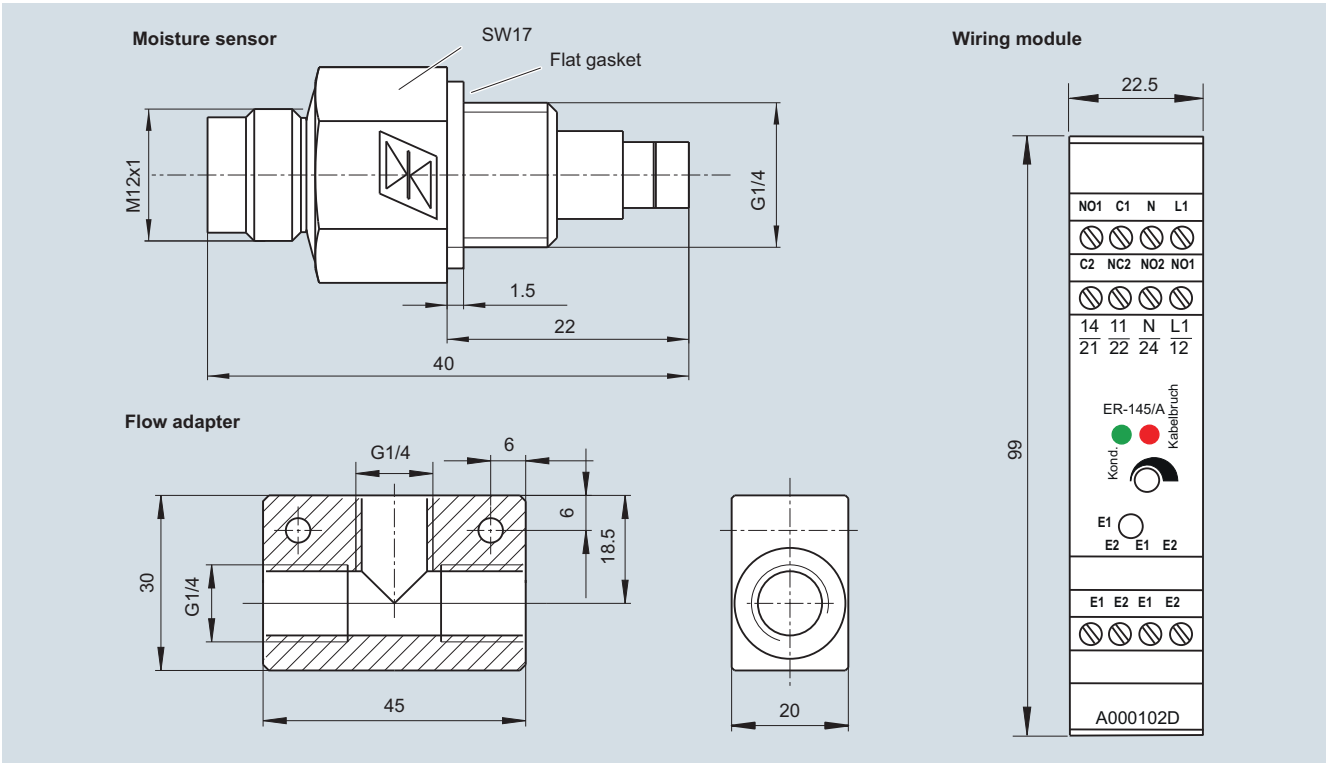

Moisture sensor, wiring module with intrinsically-safe output for applications according to ATEX, and flow adapter

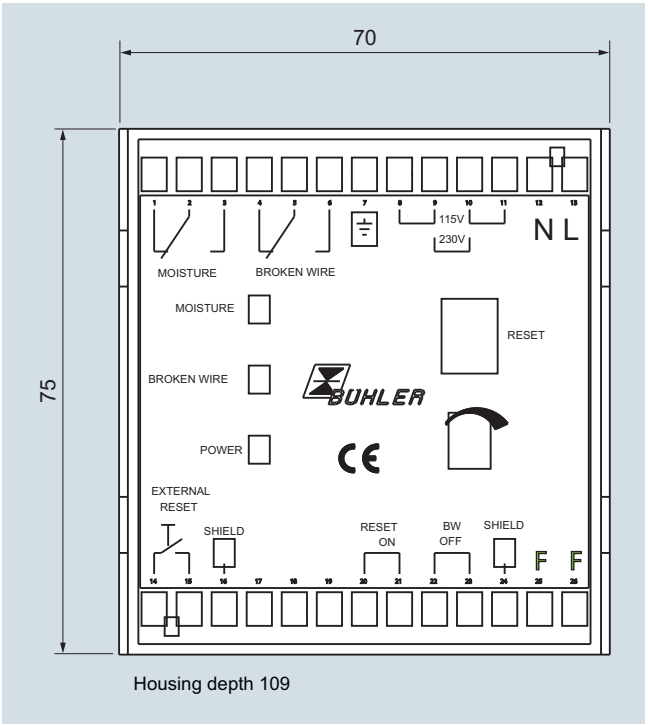

Wiring module for non-hazardous applications

© Siemens 2023

Overview

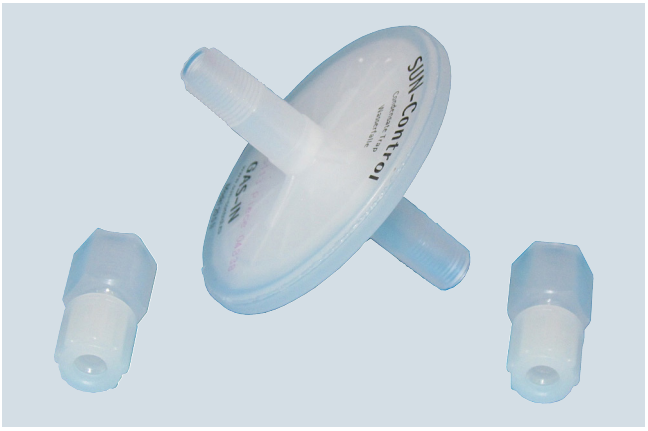

Condensation trap WT 20.5 with PP enclosure

Application

The condensation trap is positioned in the hose directly upstream of the gas analyzer. If the assigned gas preparation system fails (cooler, hose pump, dust filter or similar), the semipermeable diaphragm protects the gas analyzer from condensation and dust.

Technical specifications

Max. operating pressure of gas	2 bar
Max. condensation pressure	2 bar
Max. recommended gas flow	400 l/h
Pressure drop with 100 l air/h	10 mbar
Pore size of diaphragm	< 0.1 µm
Max. operating temperature	0 / +90 °C
Used materials	PP, PTFE
Gas connections	1/8" NPT male thread

Selection and ordering data

	Article No.
Condensation trap 1/8" NPT male thread	**7MB1943-2AC32**

Accessories

	Article No.
2 units Connection adapter (PP) 1/8" NPT threaded connection to hose connection 6/4 mm	**7MB1943-2AC34**

© Siemens 2023

Overview



The plug-in socket relay with standard plug socket and two changeover contacts can be used for simple automation tasks.

Technical specifications

Control supply voltage	24 V DC; 2 W
Number of changeover contacts for auxiliary contacts	2
Maximum operating current of the auxiliary contacts	2.5 A (230 V)
Switching characteristics	Monostable

Selection and ordering data

	Article No.
Plug-in relay, complete unit, 24 V DC LED module red	**LZS:RT4A4L24**

Circuit diagrams

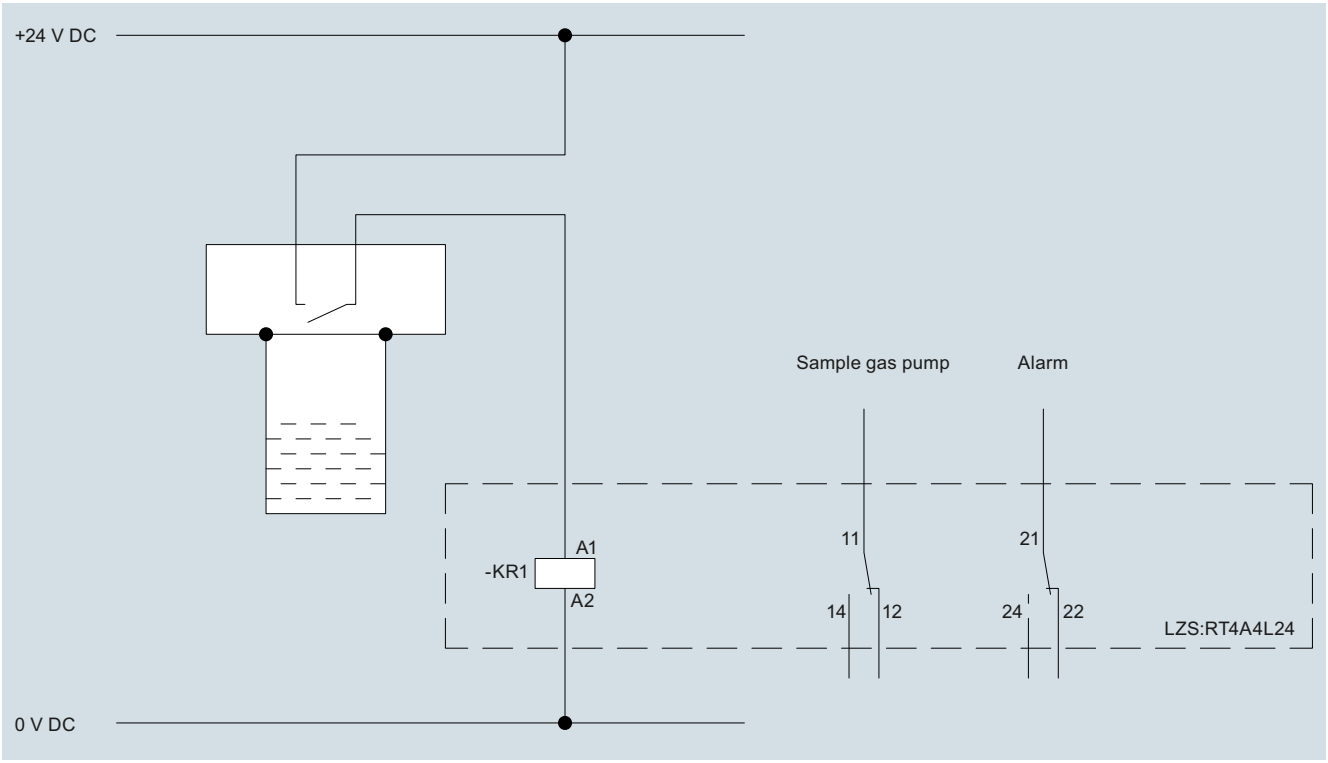

Example wiring with sample gas pump

© Siemens 2023

Condensation tank

Application

Condensation tank for use with analyzer systems, for installation in analyzer cabinets or sheds.

Technical specifications

Tank material	Polyethylene
Capacity	19 l
Weight of condensation tank (without Bero sensor)	1.05 kg
Weight of Bero sensor	0.23 kg
Quick-release connections for condensation inlet and venting	For PTFE hose 4/6
Power supply for Bero sensor	24 V DC

Selection and ordering data

	Article No.
Condensation tank Completely assembled, but without BERO sensor	**7MB1943-2AA65**
Liquid limit monitor (BERO) Power supply 24 V DC	**7MB1943-2AA66**

Dimensional drawings

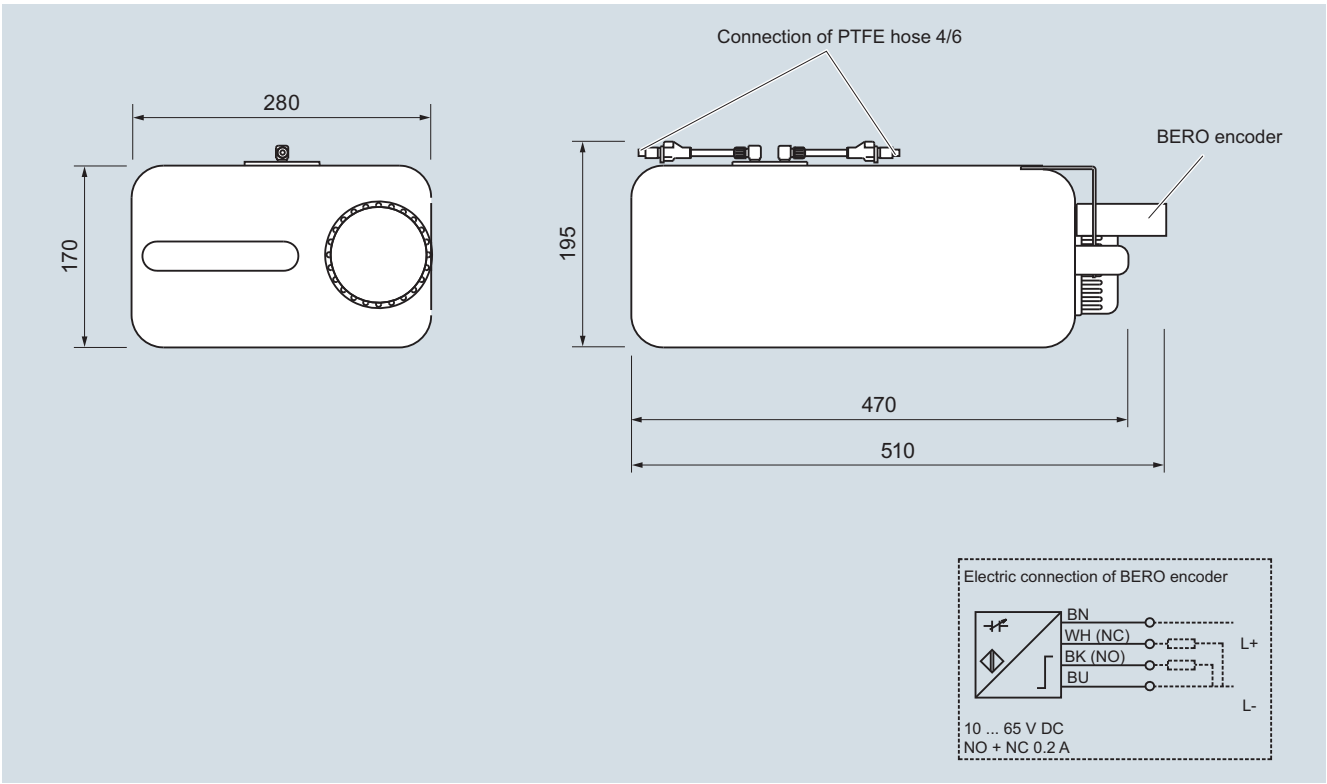

Condensation tank with liquid limit monitor

More information

The liquid limit monitor (BERO sensor) must be ordered separately and fitted by the customer into the fixing bracket on the condensation tank.

See the connection diagram for the electrical connection of the BERO sensor.

© Siemens 2023

Application

For the continuous removal of condensation.

Technical specifications

Pump capacity	Approx. 0.3 l/h
Materials	
• Hose	Novopren
• Hose couplings	PVDF
Electrical connections	Terminals
Max. permissible ambient temperature	40 °C
Final pressure	0.8 bar
Explosion protection	–
Power supply	115/230 V AC, 50/60 Hz, switchable
Weight	Approx. 0.5 kg

Selection and ordering data

	Article No.
Hose pump	**7MB1943-3AA20**

Accessories and consumables

	Article No.
Hose	**7MB1943-3AA22**
Elbow union For Teflon hose 4 x 1 mm	See connection elements/connections made of PVDF

Dimensional drawings

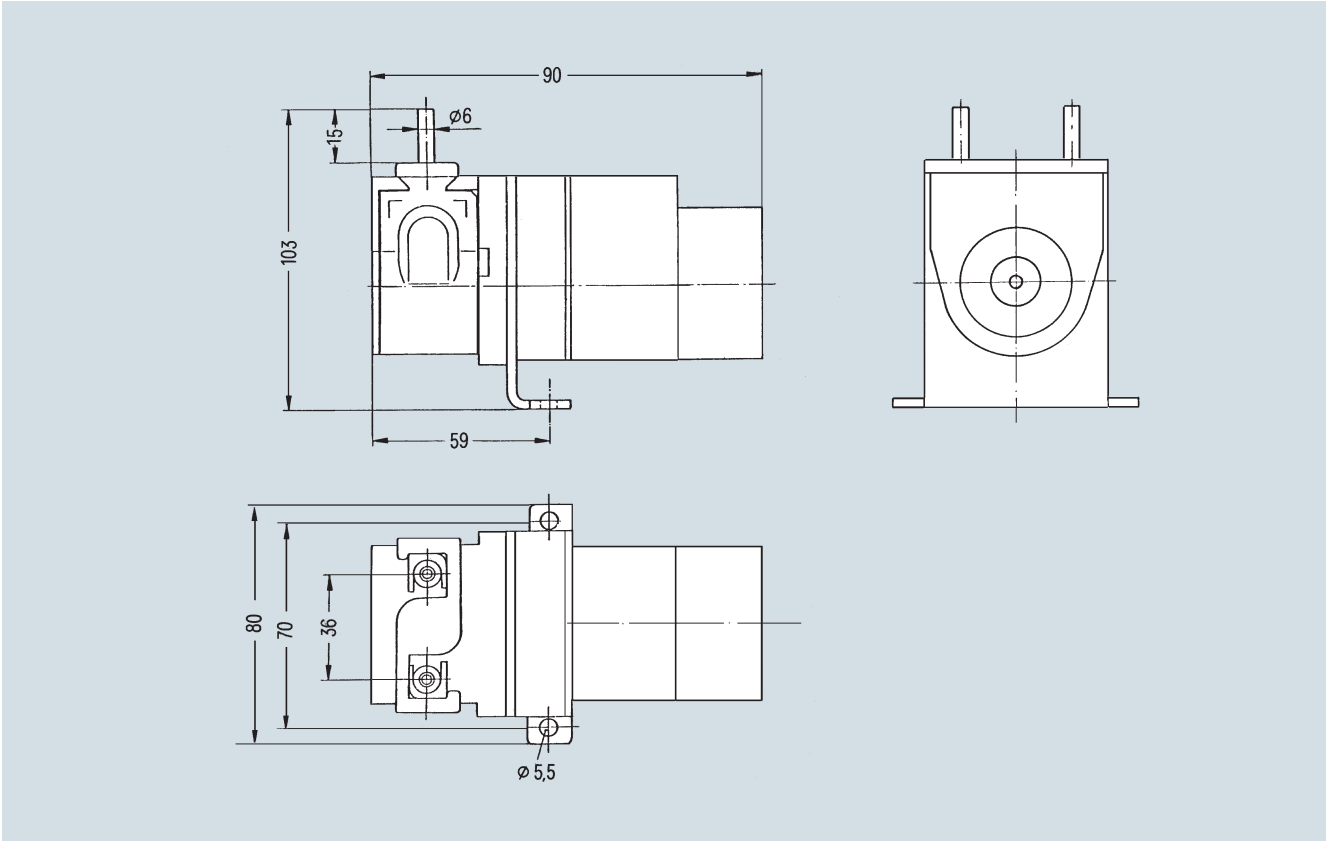

Hose pump

© Siemens 2023

Compressor gas coolers

Overview



Application

Reduction of the dew point of moist sample gases in order to bring the sample gas to a stable, low dew point. The gas cooler prevents condensation of the sample gas in the subsequent sample preparation system and in the analyzer. As a result of the constant, low dew point, the use of gas coolers also largely reduces water vapor cross-sensitivity (e.g. with NDIR devices) and volume errors.

The non-explosion-proof compressor gas coolers are available with 1, 2 or 4 cooling circuits/heat exchangers (for 1 to 4 sample gas streams). The explosion-proof compressor gas coolers can be fitted with 1 or 2 cooling circuits/heat exchangers.

With the non-explosion-proof compressor gas coolers, the condensation produced in the respective heat exchanger is disposed of using hose pumps. The hose pumps guarantee that the system is sealed off from the atmosphere. This prevents the sucking-in of "incorrect air" or the discharge of sample gas in the case of an overpressure.

With the explosion-proof gas coolers, the condensation must be disposed of externally (e.g. via automatic condensation traps or explosion-proof hose pumps).

Some versions of the non-explosion-proof gas coolers (type CSS-V) are also equipped with a fine filter with moisture sensor and evaluation electronics in addition to the hose pumps.

The status alarm is triggered if there is an inrush of liquid.

© Siemens 2023

Design

Flow diagram of the non-explosion-proof compressor gas coolers

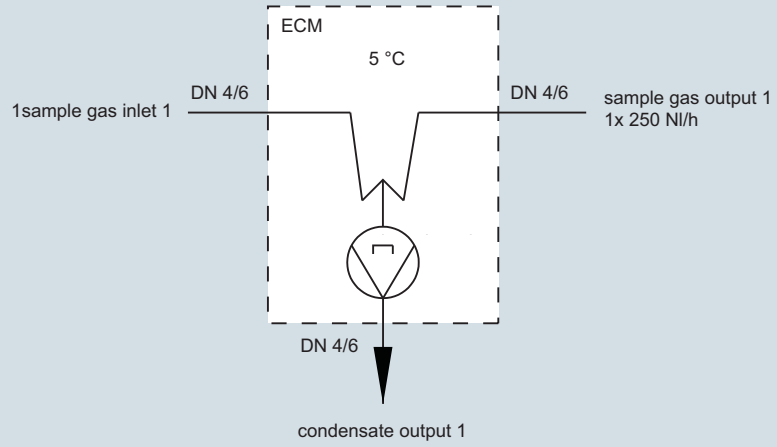

Design with 1 gas path

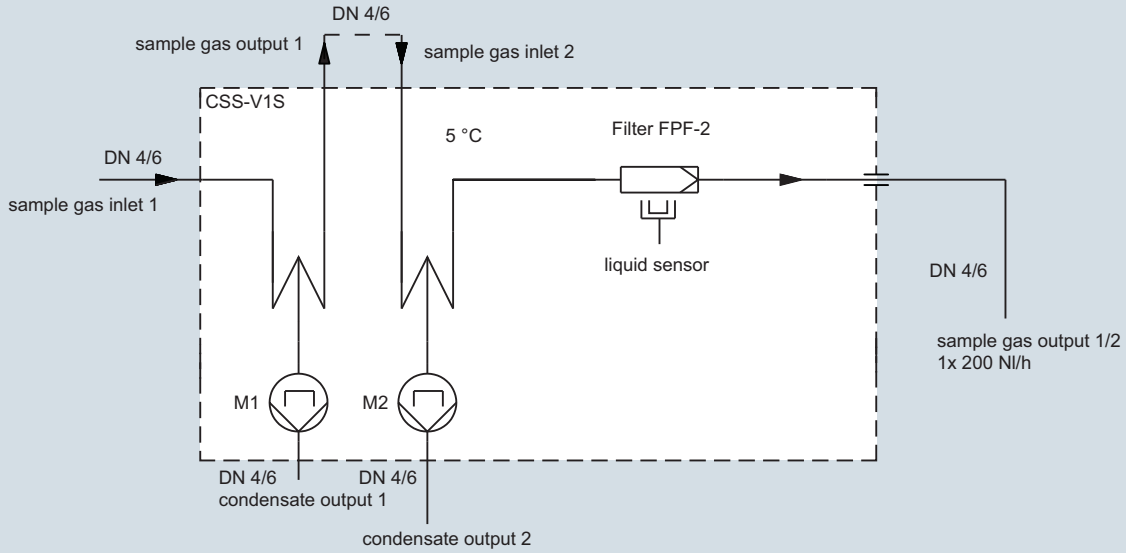

Design with 2 gas paths; version 1

© Siemens 2023

Compressor gas coolers

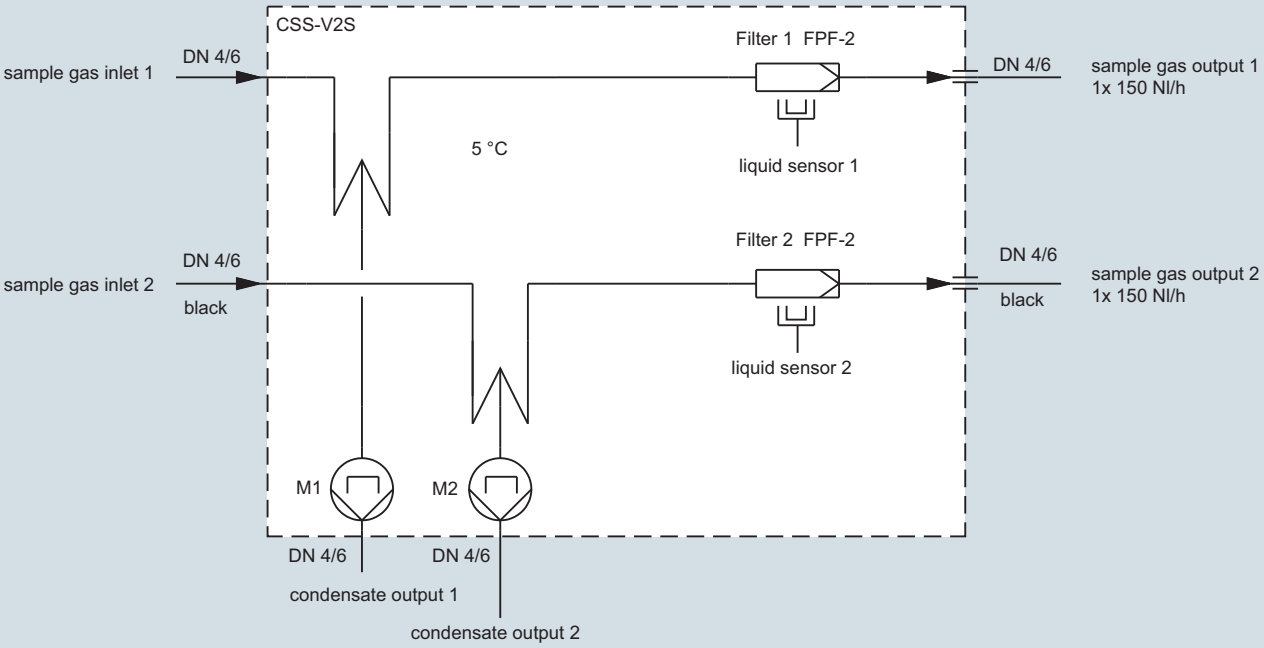

Design with 2 gas paths; version 2

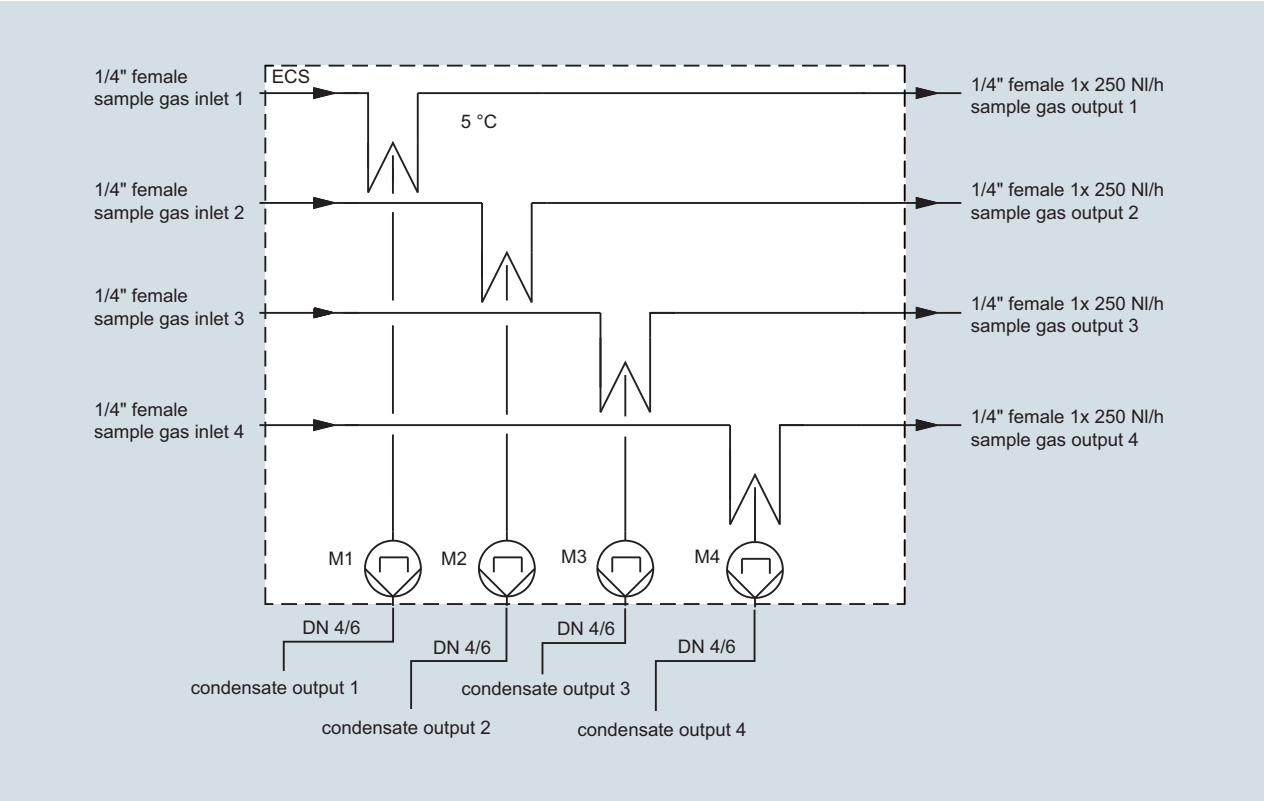

Design with 4 gas paths

© Siemens 2023

Technical specifications

Non-Ex-protected compressor gas coolers

Type	Unit	ECM	CSS-V1S CSS-V2S	ECS
Gas paths / heat exchangers (HE) Material PVDF	Units	1	2	4
Integrated hose pump (SR25.2)	Units	1	2	4
Integrated fine filter with moisture sensor	Units	0	1 or 2	0
Gas flow	l/h	Max. 250[1)]	Max. 2 x 150[1)]	Max. 4 x 250[1)]
Gas inlet temperature	°C	Max. 180[1)]	Max. 105[1)]	Max. 180[1)]
Gas inlet dew point	°C	Max. 80[1)]		
Gas outlet dew point	°C	Factory setting +5; range of adjustment 2 … 7		
Ambient temperature	°C	10 … 50	10 … 40	5 … 45
Gas pressure	bar a	Max. 2	0.7 ... 1.4	Max. 2
Dead volume/HE	ml	100	25	70
Wetted parts material		PVDF, Novopren	PVDF, Novopren, PVC, FPM, PPH, PTFE	PVDF, Novopren
Operational readiness	min	< 15	10	< 30
Power consumption	VA		Max. 220	Max. 280
Power supply connection		230 V AC; 50 Hz 115 V AC; 60 Hz	230 V AC; 50 Hz optional 115 AC; 50 … 60 Hz	230 V AC; 50 Hz 115 V AC; 60 Hz
Electric connection		Terminals 2.5 mm²	Appliance plug with 2 m cable	Terminals 2.5 mm²
Status alarm (max. 250 V 2 A AC/DC 500 VA, 50 W)		2 Changeover contacts (potential-free)	1 Changeover contact as common alarm	2 Changeover contacts (potential-free)
Degree of protection for housing		IP 20 (EN 60529)		
Housing design/type of mounting		Wall mounting	19" rack mounting or wall mounting	
Housing dimensions (W x H x D)	mm	270 x 270 x 316	483 x 268 x 348	483 x 360 x 406
Weight	kg	Approx. 14	Approx. 23	Approx. 34
Gas/condensation connections		For PTFE hose 4/6		
Housing color	RAL	9003	7035	9003

1) Technical data with maximum values must be evaluated with consideration of the total cooling capacity at 25 °C and an outlet dew point of 5 °C.

Version 1: **Type** **CSS-V1S**	**Heat exchangers in series** HE 1 for preliminary condensation; HE 2 for constant dew point temperature of sample and calibration gas. Calibration gas valves and sample gas pump can be fitted between the the outlet HE1 and the inlet HE2. A fine filter accessible from the front is fitted downstream of HE2. To protect subsequent analyzers from an inrush of liquid, a liquid alarm sensor is integrated in the filter.
Version 2: **Type** **CSS-V2S**	**Heat exchangers in parallel** 2 separate heat exchangers arranged in parallel, each with a downstream filter and liquid alarm sensor; e.g. for measuring two different sample gases in one analyzer cabinet.

© Siemens 2023

Compressor gas coolers

Ex-protected compressor gas coolers

Type	Unit	EC-Ex 1SS	EC-Ex 2SS
Gas paths / heat exchangers (HE) Material stainless steel; 1.4571	Units	1	2
Gas flow	l/h	Max. 250[1)]	Max. 2 x 250[1)]
Gas inlet temperature	°C	Max. 180[1)]	
Gas inlet dew point	°C	Max. 80[1)]	
Gas outlet dew point	°C	Factory setting +5; range of adjustment 2 … 7	
Ambient temperature	°C	5 … 45	
Gas pressure	bar a	Max. 11	
Dead volume/HE	ml	70	
Wetted parts material		Stainless steel	
Operational readiness	min	<30	
Power consumption	VA	Approx. 280	
Power supply connection		230 V AC; 50 Hz; ± 10% optional 115 V AC; 50 … 60 Hz; ± 10%	
Electric connection		Terminals 2.5 mm^2	
Status alarm (max. 230 V 2 A AC/DC 100 VA, 50 W)		1 changeover contact	
Degree of protection		IP 20 (EN 60529)	
Ex approval (ATEX)		II 2G EEx pedq [ib] IIC T4	
Housing design/type of mounting		19" rack mounting or wall mounting	
Housing dimensions (W x H x D)	mm	483 x 360 x 450	
Weight	kg	Approx. 40	
Gas connections		G1/4 inch (female) Optionally available with NPT 1/4 inch	
Condensation connections		G3/8 inch (female) Optionally available with NPT 3/8 inch	
Housing color	RAL	9003	

1) Technical data with maximum values must be evaluated with consideration of the total cooling capacity at 25 °C and an outlet dew point of 5 °C.

© Siemens 2023

Selection and ordering data

Non-Ex-protected compressor gas coolers

	Units	Article No.		Type
Compressor gas cooler				
1 gas path • Heat exchanger / hose pump • Fine filter with moisture sensor - Power supply 230 V AC, 50 Hz - Power supply 115 V AC, 60 Hz	 1 1	 **7MB1943-3BB45** **7MB1943-3BB46**		ECM
2 gas paths, version 1, series connection • Heat exchanger / hose pump • Fine filter with moisture sensor - Power supply 230 V AC, 50 Hz - Power supply 115 V AC, 50 … 60 Hz	 2 1	 **7MB1943-3BB47** **7MB1943-3BB48**		CSS-V1S
2 gas paths, version 2, parallel connection • Heat exchanger / hose pump • Fine filter with moisture sensor - Power supply 230 V AC, 50 Hz - Power supply 115 V AC, 50 … 60 Hz	 2 2	 **7MB1943-3BB60** **7MB1943-3BB50**		CSS-V2S
4 gas paths • Heat exchanger / hose pump • Fine filter with moisture sensor - Power supply 230 V AC, 50 Hz - Power supply 115 V AC, 60 Hz	 3 0	 **7MB1943-3BB53** **7MB1943-3BB54**		ECS

Accessories for non-Ex-protected compressor gas coolers

	Article No.
Hose pump, complete (SR25.2)	**7MB1943-3AA26**
Spare hose with connection glands	**7MB1943-3AA27**
Hose reel stand, complete	**7MB1943-3AA28**
Spare filter, glass fiber, 0.3 µm (25 units/pack)	**7MB1943-3AC40**
O-ring for filter, FPF-2/54, Viton	**7MB1943-3AC41**

© Siemens 2023

Compressor gas coolers

Ex-protected compressor gas coolers

	Units	Article No.		Type
Compressor gas cooler with				
1 gas path • Stainless steel heat exchanger - Power supply 230 V AC, 50 Hz - Power supply 115 V AC, 50 … 60 Hz	1	**7MB1943-3BB55** **7MB1943-3BB56**		EC-EX 1SS
2 gas paths • Stainless steel heat exchanger - Power supply 230 V AC, 50 Hz - Power supply 115 V AC, 50 … 60 Hz	2	**7MB1943-3BB57** **7MB1943-3BB58**		EC-EX 2SS

Versions with 3 or 4 gas paths on request.

© Siemens 2023

Application

Needle valves are used to set the gas flow to the required value. They should not be used as shut-off valves.

Technical specifications

	Needle valve made of PVDF
Nominal diameter	4 mm
Permissible operating overpressure	• 10 bar at 20 °C • 4 bar at 80 °C
Max. permissible process medium temperature	120 °C
Max. permissible ambient temperature	120 °C
Material	PVDF
Gas connection	Threaded joint for hose 4/6
Weight	Approx. 0.1 kg

Selection and ordering data

	Article no.
Needle valve made of PVDF	**7MB1943-2BA13**

Dimensional drawings

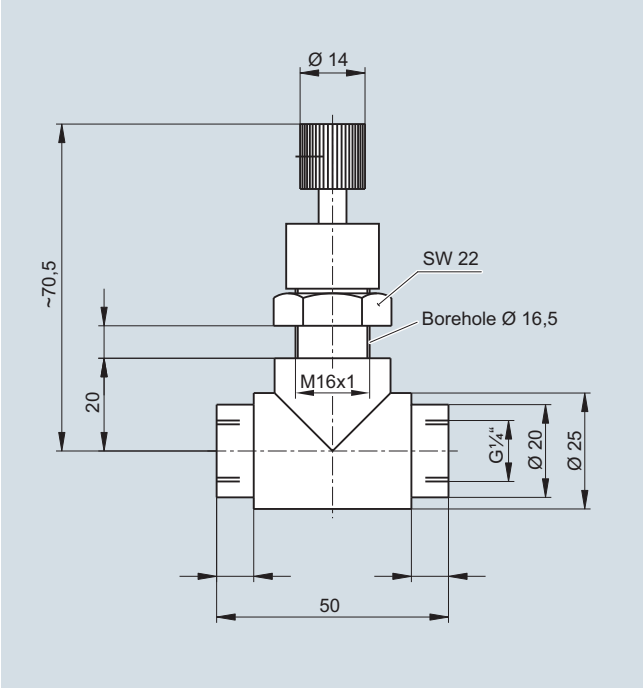

Needle valve made of PVDF

© Siemens 2023

Shut-off and multiway ball valves made of PVDF

Application

To shut off and switch over gases. Also suitable for highly corrosive gases.

Technical specifications

Gas connection	Screw-in fitting G¼
Nominal diameter	4 mm
Permissible operating overpressure	10 bar
Max. permissible sample temperature	140 °C
Max. permissible ambient temperature	90 °C[1)]
Material of parts wetted by the sample gas	Polyvinylfluoride (PVDF) / Viton
Type of mounting	With mounting clamp

1) 140 °C on request

Selection and ordering data

	Article No.
Stopcock ball valve made of PVDF With mounting clamps	**7MB1943-2BA25**
3-way ball valve made of PVDF With mounting clamps	**7MB1943-2BA30**
5-way ball valve made of PVDF With mounting clamp	**7MB1943-2BA35**
Spacer for wall mounting For 5-way ball valve	**7MB1943-2BA40**
Screw-in fitting G¼ made of PVDF For Teflon hose with 6 mm outer diameter	See "Connection elements/connection elements made of PVDF"

Dimensional drawings

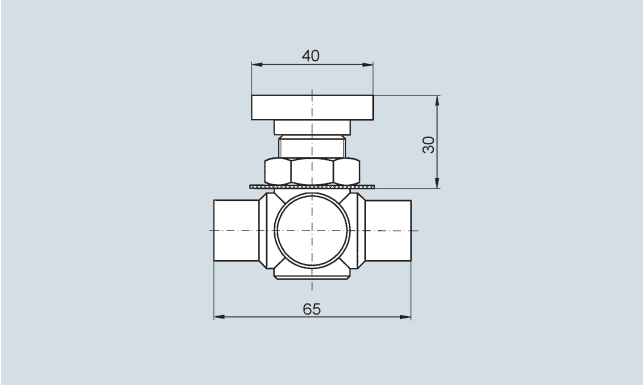

Shut-off ball valve

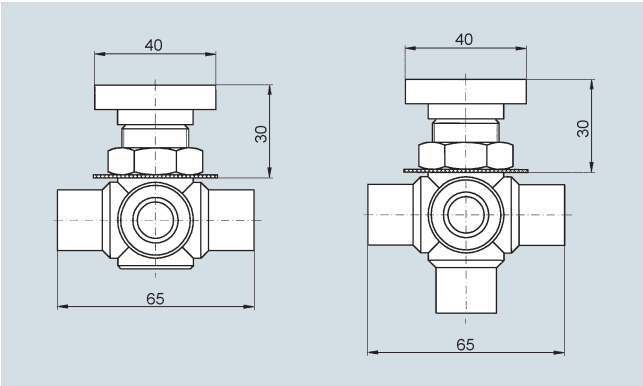

3-way and 5-way ball valves

4

© Siemens 2023

2/2-way solenoid valve made of PVDF, pivoted-armature valve

Technical specifications

Brief characteristics	• Valve body made of polyvinylidene fluoride (PVDF) • Hinged armature valve with manual override • Direct-acting with seal diaphragm • Suitable for a wide range of aggressive media • Use, for example, in analyzer systems for emissions monitoring at exhaust gas chimneys (CEMS)
Permissible pressure range	
• With 230 V AC power supply	0 ... 4 bar above atmospheric pressure
• With 24 V DC power supply	0 ... 2 bar above atmospheric pressure
Nominal diameter	4 mm
Seal material	FFKM seat seal and FKM
Gas connection	G 3/8 female thread
Electric connection	Appliance socket with LED and varistor (not included in scope of delivery)
Degree of protection acc. to EN 60529	IP65
Installation position	Any
Power supply	230 V AC, 50 Hz, 40 VA (startup), 8 VA (operation) or 24 V DC, 8 W (operation)
Principle of operation	Closed when deenergized (NC)
Ambient temperature	Max. +50 °C
Weight	Approx. 0.32 kg

Selection and ordering data

	Article No.
2/2-way solenoid valve made of PVDF[1]	
Power supply 230 V AC, 50 Hz	**7MB1943-2BA50**
Power supply 24 V DC	**7MB1943-2BA55**

[1] 2 screw-in fittings are also required (not included in scope of delivery)

Accessories

	Article No.
Appliance socket acc. to DIN EN 175301-803, form A, with LED and varistor	
For 12 … 24 V AC/DC	**7MB1943-2BB20**
For 200 … 240 V AC/DC	**7MB1943-2BB22**

Dimensional drawings

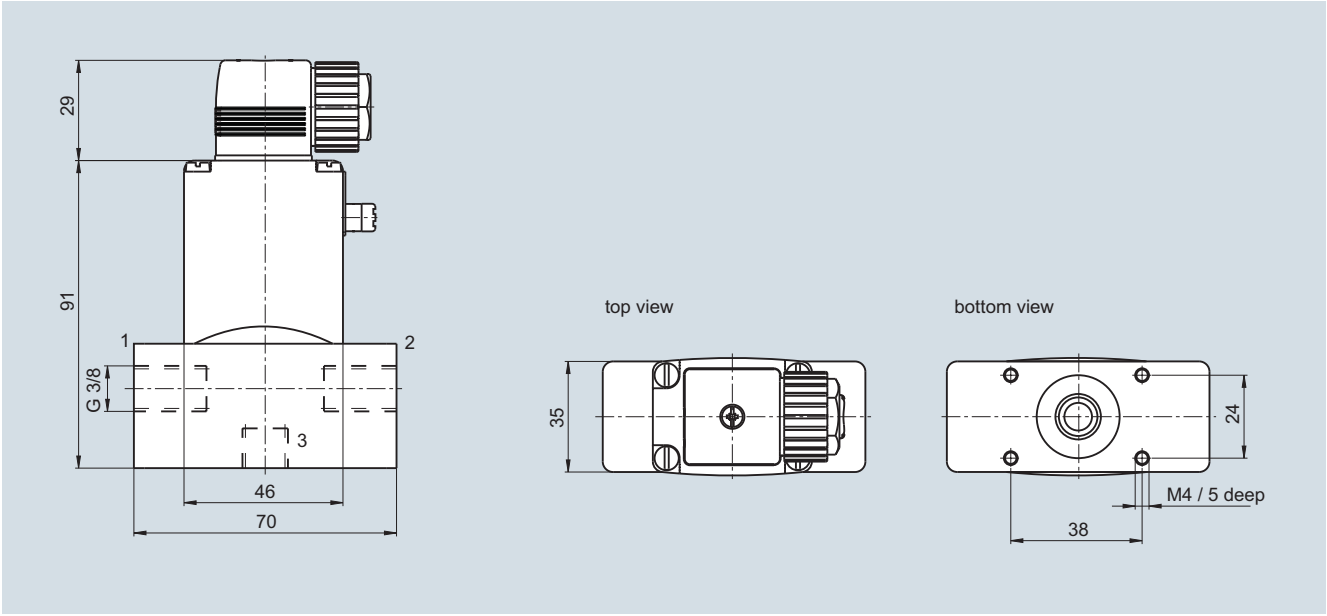

2/2-way solenoid valve 24/230 V made of PVDF, with appliance socket

4

© Siemens 2023

3/2-way solenoid valve made of PVDF, pivoted-armature valve

Technical specifications

Brief characteristics	• Valve body made of polyvinylidene fluoride (PVDF) • Hinged armature valve with manual override • Direct-acting with seal diaphragm • Suitable for a wide range of aggressive media • Use, for example, in analyzer systems for emissions monitoring at exhaust gas chimneys (CEMS)
Permissible pressure range	
• With 230 V AC power supply	0 ... 2 bar above atmospheric pressure
• With 24 V DC power supply	0 ... 1 bar above atmospheric pressure
Nominal diameter	4 mm
Seal material	FFKM seat seal and FKM
Gas connection	G 3/8 female thread
Electric connection	Appliance socket with LED and varistor (not included in scope of delivery)
Degree of protection acc. to EN 60529	IP65
Installation position	Any
Power supply	230 V AC, 50 Hz, 40 VA (startup), 8 VA (operation) or 24 V DC, 8 W (operation)
Principle of operation	3/2-way, mixing valve
Ambient temperature	Max. +50 °C
Weight	Approx. 0.32 kg

Selection and ordering data

	Article No.
3/2-way solenoid valve made of PVDF, hinged armature valve[1]	
Power supply 230 V AC, 50 Hz	**7MB1943-2BA65**
Power supply 24 V DC	**7MB1943-2BA67**

[1] 3 screw-in fittings are also required (not included in scope of delivery)

Accessories

	Article No.
Appliance socket acc. to DIN EN 175301-803, form A, with LED and varistor	
For 12 … 24 V AC/DC	**7MB1943-2BB20**
For 200 … 240 V AC/DC	**7MB1943-2BB22**

Dimensional drawings

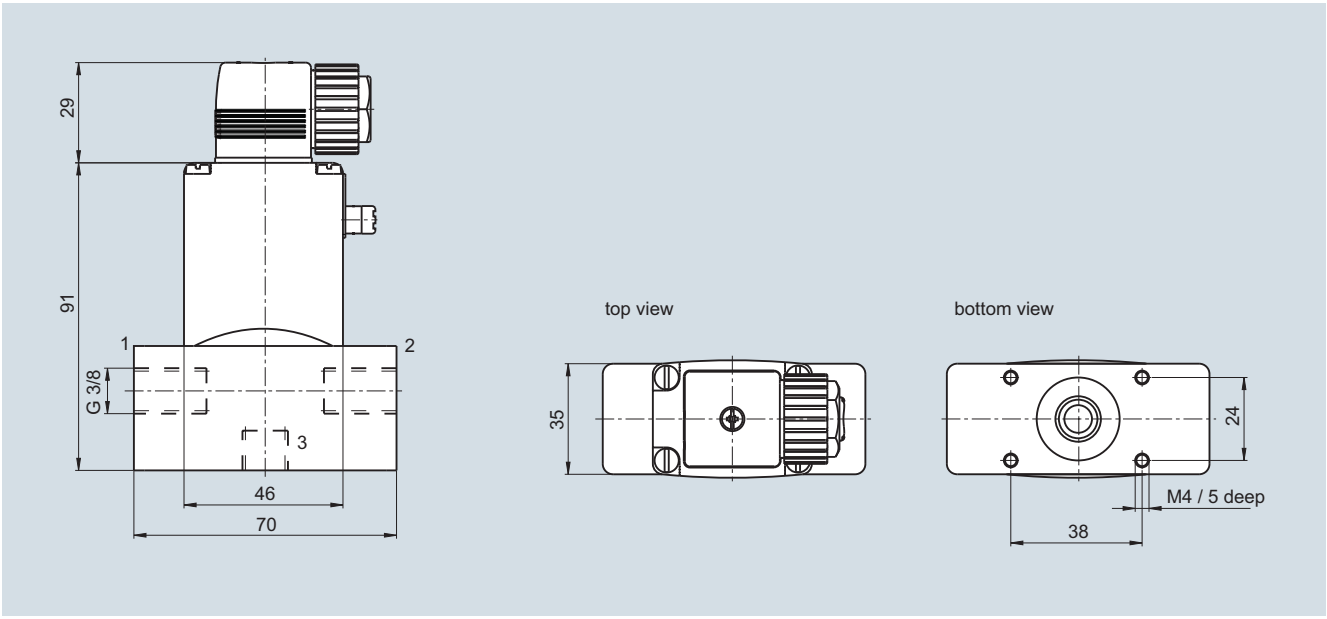

3/2-way solenoid valve 24/230V made of PVDF, with appliance socket

© Siemens 2023

Application

To measure and display volume flows. The flowmeter version with PEEK float is also suitable for corrosive gases.

The flowmeter works according to the variable-area measuring principle and therefore does not cause a delay in indication.

The flow is adjusted using a precision valve.

The flowmeter is available with or without a limit signal transmitter. An isolated switch amplifier is required when using a limit signal transmitter (see “Flowmeter/Isolated switch amplifier”).

Technical specifications

Flowmeter	
Measuring range	10 ... 100 l gas/h
Materials	
• Heads	PVDF
• Cone	Borosilicate glass
• Float	
- 7MB1 943-2BB30/35	Stainless steel (mat. No. 1.4401)
- 7MB1 943-2BB31/36	PEEK
• Gasket	Viton
Gas connection	G¼ female thread
Max. permissible operating pressure	6 bar
Weight	Approx. 0.4 kg
Limit signal transmitter	
Rated voltage	8 V DC
Current consumption	
• Active area free	3 mA
• Active area covered	1 mA
Inherent inductance	170 µH
Inherent capacitance	90 nF
Permissible ambient temperature	-25 ... +100 °C
Degree of protection to EN 60529	IP67

Selection and ordering data

	Article No.
Flowmeter	
Measuring range 10 … 100 l/h	
• Without limit signal transmitter	**7MB1943-2BB30**
• With limit signal transmitter	**7MB1943-2BB35**
Flowmeter for corrosive gases	
Measuring range 10 … 100 l/h	
• Without limit signal transmitter	**7MB1943-2BB31**
• With limit signal transmitter	**7MB1943-2BB36**

Accessories

2 screw-in fittings with G¼ female thread are optionally required in addition, see "Connection elements/Connection elements made of PVDF".

Dimensional drawings

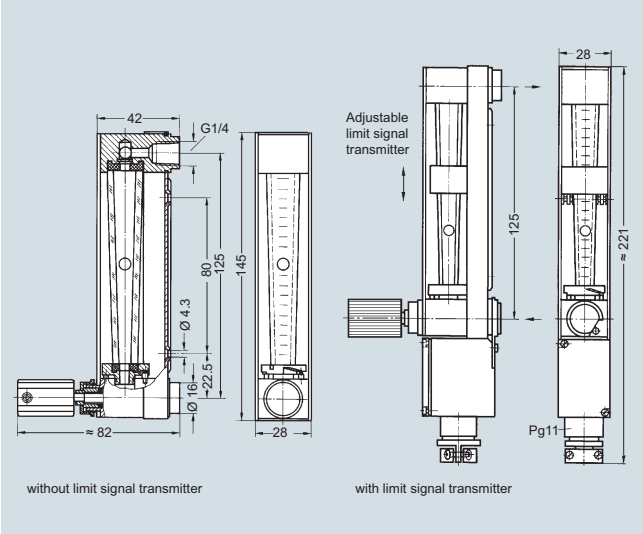

Flowmeter DK 800

© Siemens 2023

Isolated switch amplifier

Overview

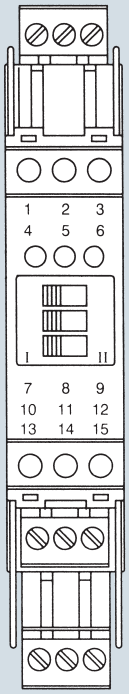

Isolated switch amplifier, front view

Application

- Inputs (intrinsically-safe) acc. to DIN EN 60947-5-6 (NAMUR) or mechanical contacts
- Control circuits EEx ia IIC
- Reversible direction of control action
- Signal outputs (not intrinsically-safe) with changeover contact max. 253 V AC / 2 A
- EMC according to EN 61326, NAMUR NE 21
- Electrical isolation according to EN 50020

Technical specifications

Switching capacity	Signal outputs (not intrinsically-safe) with changeover contact max. 253 V; 2 A
Ambient temperature	-20 ... +60 °C
Dimensions (L x W x H) in mm	120 x 20 x 115 (DIN rail mounting)
Degree of protection	Control circuit EEx ia IIC
Weight	Approx. 0.15 kg

Selection and ordering data

	Article No.
Isolated switch amplifier	
24 V DC	
• 1-channel	**7MB1943-2BB41**
• 2-channel	**7MB1943-2BB42**
230 V AC, 45 … 65 Hz	
• 1-channel	**7MB1943-2BB43**
• 2-channel	**7MB1943-2BB44**
115 V AC, 45 … 65 Hz	
• 1-channel	**7MB1943-2BB46**
• 2-channel	**7MB1943-2BB47**

Accessories

Two screw-in fittings with G¼ female threads are required in addition. They are available in two versions. For ordering data see "Connection elements/Connection elements made of PVDF".

Circuit diagrams

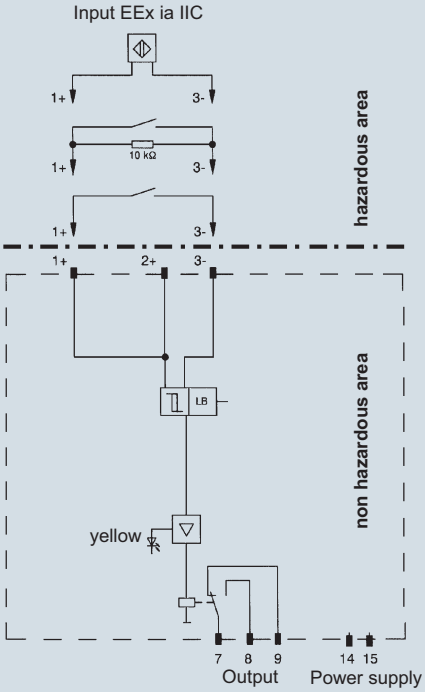

Isolated switch amplifier, schematic diagram (1 channel)

© Siemens 2023

Overview



Single-stage pressure reducer for N_2 or O_2 and for calibration gases for connection to gas cylinders

Application

For use with OXYMAT gas analyzers for reference gases N_2 and O_2. Chromium-plated brass enclosure. The single-stage pressure reducer is also available in a stainless steel version for corrosive calibration gases. For connection to gas cylinders.

Version with contact manometer on the high-pressure side

Electric signal when a minimum pressure is reached allows early replacement of gas cylinder.

Technical specifications

Single-stage pressure reducer for connection to gas cylinders	
Gas connection, outlet	Threaded joint for pipe with 6 mm outer diameter (clamping ring connection)
Inlet pressure	Max. 200 bar
Outlet pressure range	0.5 ... 4 bar
Temperature range	-20 ... +70 °C
Contact manometer	
Type of contact	Inductive contact, isolated switch amplifier required
ATEX identification of inductive contact sensor	II 2 G EEx ia IIC T6
Connecting cable length	Approx. 1 m

Selection and ordering data

	Article No.
Single-stage pressure reducer for connection to gas cylinders	
For N_2, DIN 477 No. 10, brass	**7MB1943-1PB01-2AB3**
For O_2, DIN 477 No. 9, brass	**7MB1943-1PB01-2AB5**
For calibration gas, DIN 477 No. 14, stainless steel	**7MB1943-1PA01-2AB6**
For calibration gas, DIN 477 No. 14, stainless steel, with inductive contact manometer	**7MB1943-1PA01-2AC6**

Accessories

An isolated switch amplifier is required to use the inductive contact (see "Flowmeters/Isolated switch amplifier").

© Siemens 2023

Two-stage pressure reducer for calibration gas cylinders

Overview



Two-stage pressure reducer for connection to gas cylinders

Application

Two-stage pressure reducer with metal diaphragms for corrosive and non-corrosive gases for connection to gas cylinders.

Housing with minimized dead space, made of stainless steel (for corrosive gases) or chromium-plated brass (for non-corrosive gases).

When using Teflon hose 4 x 6 instead of piping, always ensure that the connection between the hose and the clamping ring connection is secure.

Version with contact manometer on the high-pressure side

Electric signal when a minimum pressure is reached allows early replacement of gas cylinder.

Technical specifications

Two-stage pressure reducer for connection to gas cylinders	
Gas connection, outlet	Threaded joint for pipe or hose with 6 mm outer diameter (clamping ring connection)
Inlet pressure	Max. 200 bar
Outlet pressure range	0.1 ... 1.5 bar or 1 ... 10 bar
Temperature range	-20 ... +70 °C
Contact manometer	
Type of contact	Inductive contact, isolated switch amplifier required
ATEX identification of inductive contact sensor	II 2 G EEx ia IIC T6

Selection and ordering data

	Article No.
Two-stage pressure reducer for connection to gas cylinders	
Outlet pressure range 0.1 … 1.5 bar	
• For corrosive gases; material: stainless steel	**7MB1943-1QA01-1AB***
• For non-corrosive gases; material: chromium-plated brass	**7MB1943-1QB01-1AB***
Outlet pressure range 1 … 10 bar	
• For corrosive gases; material: stainless steel	**7MB1943-1QA01-3AB***
• For non-corrosive gases; material: chromium-plated brass	**7MB1943-1QB01-3AB***
Two-stage pressure reducer with inductive contact manometer on the high-pressure side for connection to gas cylinders	
Outlet pressure range 0.1 … 1.5 bar	
• For corrosive gases; material: stainless steel	**7MB1943-1QA01-1AC***
• For non-corrosive gases; material: chromium-plated brass	**7MB1943-1QB01-1AC***
Outlet pressure range 1 … 10 bar	
• For corrosive gases; material: stainless steel	**7MB1943-1QA01-3AC***
• For non-corrosive gases; material: chromium-plated brass	**7MB1943-1QB01-3AC***

Gas type	**Cylinder connection acc. to DIN 477**	**"*" Replace by (last digit of Article No.)**
Hydrogen H_2	No. 1	**2**
Nitrogen N_2	No. 10	**3**
Synthetic air or oxygen O_2	No. 9	**5**
Calibration gas mixtures	No. 14	**6**

Accessories

An isolated switch amplifier is required to use the inductive contact (see "Flowmeters/Isolated switch amplifier").

© Siemens 2023

Übersicht

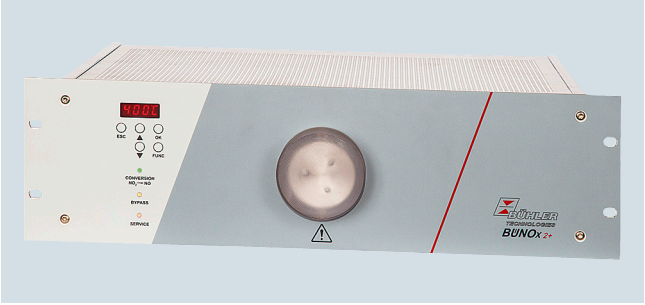

Benefits

- 19" rack-mounted enclosure
- High conversion rate > 97%
- High NO_2 conversion capability (max. 300 ppm NO_2)
- Long service life
- Easy replacement of converter cartridge without tools
- Integrated maintenance calculator for service life monitoring
- Bypass solenoid valves (optional)

Application

The gas converter enables the continuous measurement of the significant NO_xcomponents (NO + NO_2) by converting the NO_2 portion into dry sample gases in NO. The sum NO_x can thus be measured indirectly with the ULTRAMAT 23 or ULTRAMAT 6.

Design

The NO_2-NO converter is available as a 19" rack unit. A converter with bypass solenoid valves (optional) is available in addition.

No conversion of NO_2 to NO takes place in bypass operation. The maintenance workload for the device is minimized by the reactor fastener on the front panel. The converter is intended for conversion after the sample gas cooler. The input dew point of the sample gas cannot be lower than 10 °C.

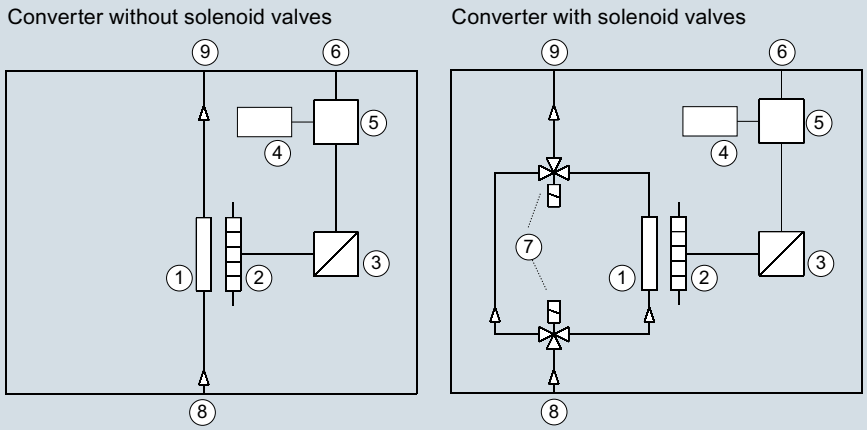

Gas flow chart NO_2-NO converter

© Siemens 2023

Mode of operation

The NO_2 is converted into NO in a heated reactor cartridge. The reactor filling and the special design of the reactor cartridge allow a very high conversion rate of NO_2. During normal operation, the current converter temperature is shown on the display. The remaining service life of the converter cartridge can be calculated based on the operating conditions and a service request can be generated.

Technical specifications

General information	
Operating temperature	400 °C
Operational readiness	After a warm-up time of approx. 30 min
Gas inlet conditions	
Sample gas pressure	Max. 1.5 bar a
Sample gas flow	Max. 120 l/h (max. 2 l/min)
Sample gas temperature	5 … 80 °C
Dew point	< 10 °C
Climatic conditions	
Permissible ambient temperature	
• Operation	5 … 50 °C
• Storage and transport	-20 … +70 °C
Permissible ambient humidity	< 80% relative humidity for storage and transport
Electrical specifications	
Power supply	115 V AC or 230 V AC 50/60 Hz
Power consumption	< 500 W
Thermal load	85 W with an oven temperature of 400 °C
Electrical inputs and outputs	
Status outputs	3 change-over contacts for service, operating mode and temperature max. 230 V AC/DC, 1 A
Signal input	Control of solenoid valves, with external switch, 24 V DC, 1 mA
Dimensions	
19" rack unit, 3 U	133 x 483 x 285 (H x W x D)
Degree of protection	IP20 (EN 60529)
Gas connections	6 mm
Conversion properties (NO_2 -> NO)	
Degree of conversion NO_2 -> NO	≥ 97% with new cartridge
Cartridge service life	Depending on load > 12 months (see diagram)
Maximum load	Approx. 300 ppm NO_2 at 70 l/h
Conversion temperature	400 °C

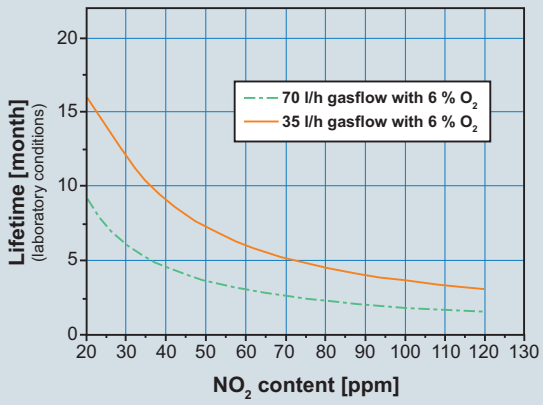

Selection and ordering data

	Article no.
NO_2-NO converter	
230 V, 50/60 Hz	**7MB1943-2DB50**
115 V, 50/60 Hz	**7MB1943-2DB51**
NO_2-NO converter with bypass valve	
230 V, 50/60 Hz	**7MB1943-2DB53**
115 V, 50/60 Hz	**7MB1943-2DB54**
Replacement reactor cartridge (typ: MC) for Bünox2+	**7MB1943-2DB52**
Replacement reactor cartridge (typ: MC) for Bünox Generation 1	**7MB1943-2DB42**

© Siemens 2023

Overview

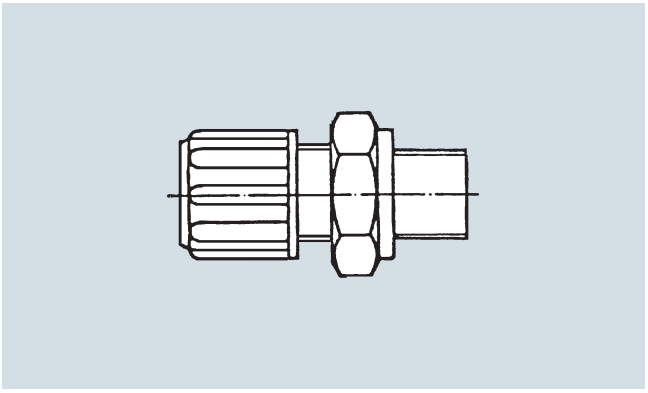

Straight male coupling

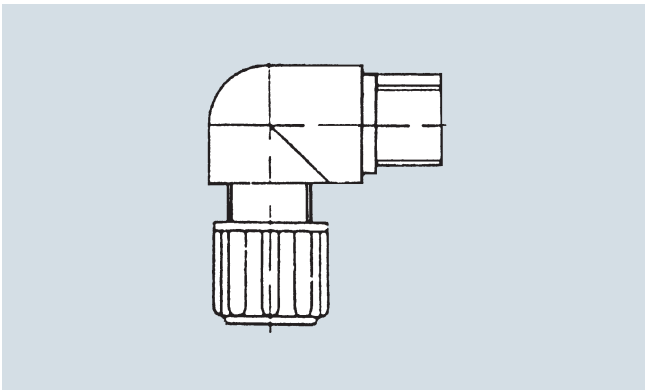

Elbow male coupling

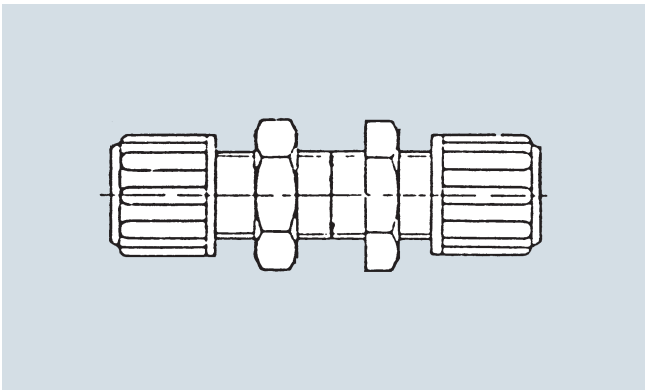

Bulkhead union

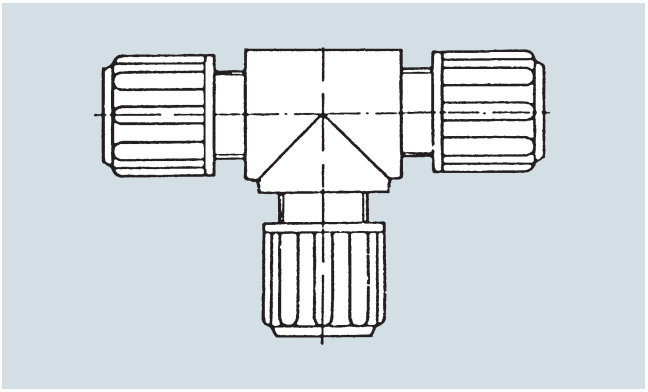

T-coupling

Selection and ordering data

	Article No.
Screwed glands made of PVDF for PTFE hose DN 4/6	
Straight screw-in fitting G 1/8	**7MB1940-6AA08**
Straight screw-in fitting G 1/4	**7MB1940-6AA06**
Straight screw-in fitting G 3/8	**7MB1943-2DA02**
Elbow screw-in fitting G 1/8	**7MB1943-2DA12**
Elbow screw-in fitting G 1/4	**7MB1943-2DA15**
Elbow screw-in fitting G 3/8	**7MB1943-2DA16**
Screwed glands made of PVDF for PTFE hose DN 4/6	
Screwed gland (Schott)	**7MB1943-2DA18**
T-screwed gland	**7MB1943-2DA17**
Elbow union	**7MB1943-2DA06**
Hose material	
Stainless steel support sleeve	
For hose 4/6	**7MB1943-2DA10**
PTFE hose 4/6 (per m)	
Natural color, suitable for clamping ring fitting technology	**7MB1943-2DB10**

4

© Siemens 2023

Notes

© Siemens 2023

Appendix



5/2 **PIA Life Cycle Portal**
Engineering, Ordering, Installation and Operation Tool

5/3 **Partners at Siemens**
5/4 Siemens Partner Program

5/5 **Product documentation**
Supplied product documentation, QR Code, SIOS

5/6 **Subject Index**

5/7 **Article No. Index**

5/8 **Conditions of sale and delivery**

© Siemens 2023

Engineering, Ordering, Installation and Operation Tool

Overview

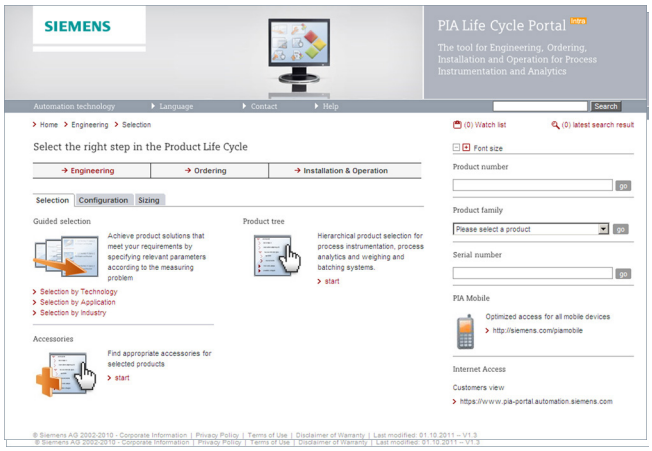

The PIA Life Cycle Portal provides the appropriate functionality in all stages of the Product Life Cycle for products of Process Instrumentation, Process Analytics and Weighing Technology.

The application guides you through Engineering & Selection, supports you at the Order and provides tools and information for Installation and Operation.

- **Phase 1:** Selection & Planning
- **Phase 2:** Ordering
- **Phase 3:** Installation & Operation
- **Additional features:** e. g. PIA Mobile

Phase 1: Selection & Planning



Selection

Achieve product solutions that meet your requirements by specifying relevant parameters according to the measuring point by using the *guided selection* or select the product directly in the *product and accessories tree*.



Configuration

Configure a selected product step by step and use the integrated configuration knowledge to avoid errors.
Product configurations which cannot be ordered are blocked.



Sizing & calculation

Sizing & calculation tools for Gas Analyzers, Weighing and Batching Systems and Flow measurement instruments.

Phase 2: Ordering



Bulk upload

Verify several part numbers in one step by uploading a simple text file.



Watchlist & projects

Collect products in a *watch list* and save it as a *project* for later use.



Interface to the Industry Mall

Order the selected products with the ordering system for Siemens' automation and drive solutions.

Phase 3: Installation & Operation



Spare parts

Find appropriate *spare parts* for selected products or corresponding product families.



After sales support

Go to the *Service and Support Portal* to access manuals, certificates and further information concerning service & support.



Device information and history

Serial number specific product information for installed devices

Additional features



Personalize

Register in order to customize the application to your personal needs.



PIA Mobile

Use the product *selection, configuration and device information and history* with the version optimized for mobile devices.
www.siemens.com/piamobile



Product details

Find all relevant product information at a single glance: commercial and technical data, certificates, images and documents etc.

More information

PIA Life Cycle Portal
Ostliche Rheinbrückenstraße 50
76187 Karlsruhe, Germany
Tel.: +49 (721) 595 2114
E-Mail: support.pia-portal@siemens.com
www.siemens.com/pia-portal

© Siemens 2023

Partners at Siemens

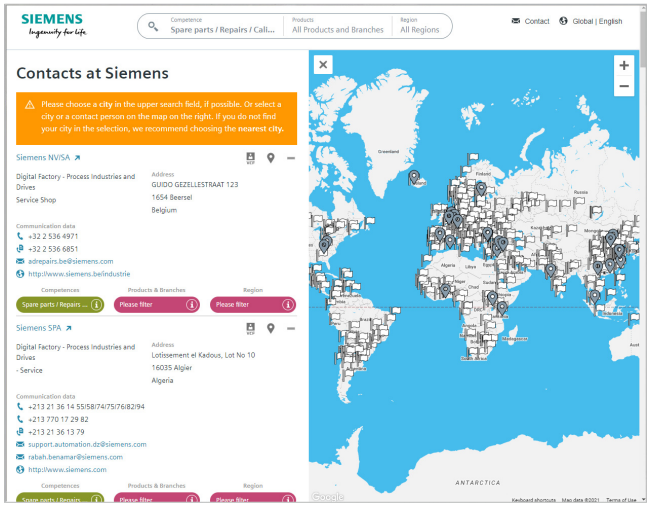

At your service locally, around the globe for consulting, sales, training, service, support, spare parts on the entire portfolio of Siemens.

Your partner can be found in our Personal Contacts Database at:
www.siemens.com/automation-contact

You start by selecting

- the required competence,
- products and branches,
- a country and a city

or by a

- location search or free text search.

© Siemens 2023

Siemens Partner Program

Overview

Siemens Solution and Approved Partner – Partners for your success

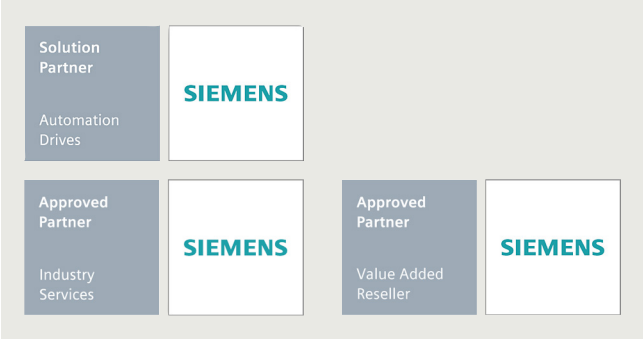

Highest competence in automation and drive technology

Siemens works closely together with selected partner companies around the world in order to ensure that customer requirements for all aspects of automation and drives are fulfilled as best as possible – wherever you are, and whatever the time.

We place great value on our customers acting in accordance with the same ideals which characterize Siemens as a whole: Competence, professionalism and quality. That is why continuous development through qualification and certification measures in line with global standards is a central aspect of our Partner Program. This means that with our partners, you benefit from the same high quality standards all over the world.
The partner emblem is the symbol for tried and tested quality.

The partner network for industry

The Siemens Partner Program offers you expertise and experience close at hand.

Within our global network, we distinguish between Solution Partners and Approved Partners. We currently work with more than 1,500 Solution Partners around the world. Our network of over 150 Approved Partners continues to grow. In more than 80 countries worldwide.

Siemens Solution Partner – Automation Drives



At present we are working with more than 1,500 Solution Partners worldwide. They are characterized by extensive application, system and sector knowledge, as well as proven project experience, and are able to implement future-proof tailored solutions of the highest quality, based on our product and system portfolio.

Siemens Approved Partner – Value Added Reseller



With their detailed technical knowledge, Siemens Approved Partners – Value Added Resellers offer a combination of products and services that range from specialist technologies and customized modifications to the provision of high-quality system and product packages. They also provide qualified technical support and assistance.

Siemens Approved Partner – Industry Services



Siemens Approved Partner – Industry Services put their unique expertise entirely at the service of enhancing your productivity and can be instrumental in ensuring the availability of your plants.

Partner Finder

The ideal partner for your task is just a mouse click away!

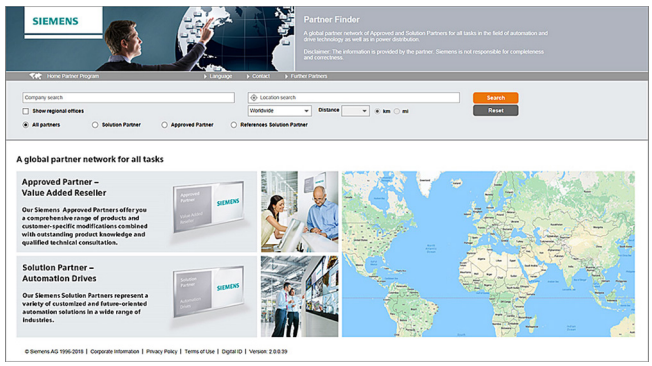

In the Siemens global Solution Partner Program, customers are certain to find the optimum partner for their specific requirements – with no great effort. The Partner Finder is basically a comprehensive database that showcases the profiles of all our partners.

Easy selection:
Set filters in the search screen form according to the criteria that are relevant to you. You can also directly enter the name of an existing partner.

Skills at a glance:
Gain a quick insight into the specific competencies of any particular partner with the reference reports.

Direct contact option:
Use our electronic query form:

www.siemens.com/partnerfinder

Additional information of the Siemens Parners for industry is available online at:

www.siemens.com/partnerprogram

© Siemens 2023

Supplied product documentation on DVD and safety instructions



Siemens products for process analytics will be delivered with a multi-language **Safety note** and a **DVD „Analytical products“**.

On the DVD, customers can find many important operating instructions and certificates of our Siemens portfolio for process analytics. As well, product or order-specific print material may be part of the delivery.

QR code – Easy access to product information

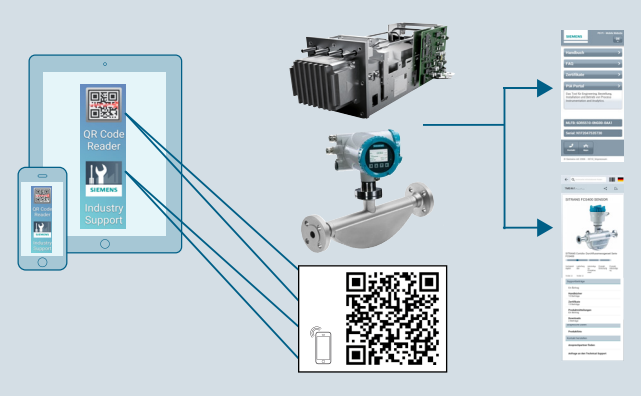

For easy identification, our devices are fitted with a QR code which can be read with the Siemens Industry Support App or any other QR code reader.

This not only enables simple access to article and serial numbers, it also provides you with a direct link to the product documentation, certificates, FAQs and videos.

You can find the Siemens Industry Support App or other QR code reader in your App Store for iOs, Android or Windows mobile.

Siemens Industry Online Support Portal (SIOS)

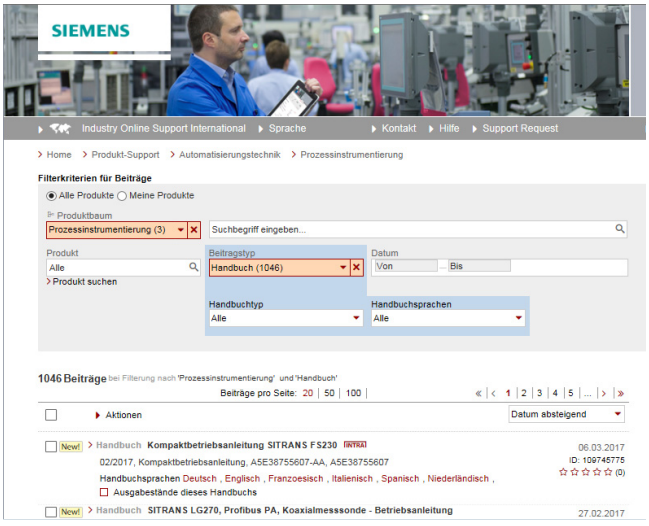

For the complete portfolio, customers can download product documentation for free using the following links to our **Siemens Industry Online Support Portal (SIOS)**:

http://www.siemens.com/processanalytics/documentation

By entering the product names as Search term and selecting the field Entry type, you can find all operating instructions, current catalogs and brochures, certificates, product software (EDDs, calculation tools), product notes and other useful information.

© Siemens 2023

B

Bellows pump 2/3

C

Coalescence filter 4/4
Compressor gas coolers 4/14
Condensation removal 4/12
Condensation tank 4/12
Condensation trap 4/10
Coupling relay 4/11

D

Diaphragm pump 2/2
Direct wiring of a sample gas pump 4/11

F

Filters 4/2
Fittings 4/31
Flowmeters 4/25
Front mounting filter 4/3

G

Gas coolers 4/14
Gas sampling probes 1/2

H

Heated sample gas lines 3/2
Heated sample gas filter 3/5
Hose pump for condensation removal 4/13

M

Moisture sensor 4/8

N

Needle valve 4/21
NO_2-NO converter 4/29

P

Pressure reducers 4/27
Pumps 2/2

R

Room air filter 4/2

S

Sample gas line 3/2
Sample gas filter 3/5
Sample gas pumps 2/4
Shut-off and multiway ball valves made of PVDF 4/22
Solenoid valves 4/23

U

Universal filter 4/6

V

Valves 4/21

W

Wiring modules 4/8

© Siemens 2023

3RS1 ...

3RS1042-1GW70 ..... 3/2, 3/3, 3/4

7MB1940-...

7MB1940-6AA01 ..... 1/11
7MB1940-6AA06 ..... 4/31
7MB1940-6AA08 ..... 4/31
7MB1940-6AB01 ..... 1/11

7MB1943-1..

7MB1943-1PA01-2AB6 ..... 4/27
7MB1943-1PA01-2AC6 ..... 4/27
7MB1943-1PB01-2AB3 ..... 4/27
7MB1943-1PB01-2AB5 ..... 4/27
7MB1943-1QA01-1AB2 ..... 4/28
7MB1943-1QA01-1AB3 ..... 4/28
7MB1943-1QA01-1AB5 ..... 4/28
7MB1943-1QA01-1AB6 ..... 4/28
7MB1943-1QA01-1AC2 ..... 4/28
7MB1943-1QA01-1AC3 ..... 4/28
7MB1943-1QA01-1AC5 ..... 4/28
7MB1943-1QA01-1AC6 ..... 4/28
7MB1943-1QA01-3AB2 ..... 4/28
7MB1943-1QA01-3AB3 ..... 4/28
7MB1943-1QA01-3AB5 ..... 4/28
7MB1943-1QA01-3AB6 ..... 4/28
7MB1943-1QA01-3AC2 ..... 4/28
7MB1943-1QA01-3AC3 ..... 4/28
7MB1943-1QA01-3AC5 ..... 4/28
7MB1943-1QA01-3AC6 ..... 4/28
7MB1943-1QB01-1AB2 ..... 4/28
7MB1943-1QB01-1AB3 ..... 4/28
7MB1943-1QB01-1AB5 ..... 4/28
7MB1943-1QB01-1AB6 ..... 4/28
7MB1943-1QB01-1AC2 ..... 4/28
7MB1943-1QB01-1AC3 ..... 4/28
7MB1943-1QB01-1AC5 ..... 4/28
7MB1943-1QB01-1AC6 ..... 4/28
7MB1943-1QB01-3AB2 ..... 4/28
7MB1943-1QB01-3AB3 ..... 4/28
7MB1943-1QB01-3AB5 ..... 4/28
7MB1943-1QB01-3AB6 ..... 4/28
7MB1943-1QB01-3AC2 ..... 4/28
7MB1943-1QB01-3AC3 ..... 4/28
7MB1943-1QB01-3AC5 ..... 4/28
7MB1943-1QB01-3AC6 ..... 4/28

7MB1943-2..

7MB1943-2AA01 ..... 3/3
7MB1943-2AA02 ..... 3/3
7MB1943-2AA14 ..... 3/5
7MB1943-2AA65 ..... 4/12
7MB1943-2AA66 ..... 4/12
7MB1943-2AA74 ..... 3/4
7MB1943-2AA75 ..... 3/4
7MB1943-2AA76 ..... 3/4
7MB1943-2AA77 ..... 3/4
7MB1943-2AA80 ..... 3/5
7MB1943-2AA81 ..... 3/5
7MB1943-2AB10 ..... 3/2
7MB1943-2AB12 ..... 3/2
7MB1943-2AB13 ..... 3/2
7MB1943-2AB14 ..... 3/2
7MB1943-2AB16 ..... 3/2
7MB1943-2AB20 ..... 3/2
7MB1943-2AB22 ..... 3/2
7MB1943-2AB24 ..... 3/2
7MB1943-2AB26 ..... 3/2
7MB1943-2AC00 ..... 4/6
7MB1943-2AC01 ..... 4/6
7MB1943-2AC06 ..... 4/8
7MB1943-2AC10 ..... 4/6
7MB1943-2AC11 ..... 4/6
7MB1943-2AC12 ..... 4/4
7MB1943-2AC13 ..... 4/4
7MB1943-2AC32 ..... 4/10
7MB1943-2AC34 ..... 4/10
7MB1943-2AC40 ..... 4/8
7MB1943-2AC41 ..... 4/8
7MB1943-2AC42 ..... 4/8
7MB1943-2AC43 ..... 4/8
7MB1943-2AC51 ..... 4/8
7MB1943-2BA00 ..... 3/3
7MB1943-2BA04 ..... 3/3
7MB1943-2BA13 ..... 4/21
7MB1943-2BA25 ..... 4/22
7MB1943-2BA30 ..... 4/22
7MB1943-2BA35 ..... 4/22
7MB1943-2BA40 ..... 4/22
7MB1943-2BA50 ..... 4/23
7MB1943-2BA55 ..... 4/23
7MB1943-2BA65 ..... 4/24
7MB1943-2BA67 ..... 4/24
7MB1943-2BB20 ..... 4/23, 4/24
7MB1943-2BB22 ..... 4/23, 4/24
7MB1943-2BB30 ..... 4/25
7MB1943-2BB31 ..... 4/25
7MB1943-2BB35 ..... 4/25
7MB1943-2BB36 ..... 4/25
7MB1943-2BB41 ..... 4/26
7MB1943-2BB42 ..... 4/26
7MB1943-2BB43 ..... 4/26
7MB1943-2BB44 ..... 4/26
7MB1943-2BB46 ..... 4/26
7MB1943-2BB47 ..... 4/26
7MB1943-2CA30 ..... 4/3
7MB1943-2CA32 ..... 4/3
7MB1943-2DA02 ..... 4/31
7MB1943-2DA06 ..... 4/31
7MB1943-2DA10 ..... 1/11, 4/31
7MB1943-2DA12 ..... 4/31
7MB1943-2DA15 ..... 4/31
7MB1943-2DA16 ..... 4/31
7MB1943-2DA17 ..... 4/31
7MB1943-2DA18 ..... 4/31
7MB1943-2DA20 ..... 1/11
7MB1943-2DB10 ..... 4/31
7MB1943-2DB42 ..... 4/30
7MB1943-2DB50 ..... 4/30
7MB1943-2DB51 ..... 4/30
7MB1943-2DB52 ..... 4/30
7MB1943-2DB53 ..... 4/30
7MB1943-2DB54 ..... 4/30
7MB1943-2FA00 ..... 1/2
7MB1943-2FA01 ..... 1/2
7MB1943-2FA02 ..... 1/6
7MB1943-2FA03 ..... 1/6
7MB1943-2FA04 ..... 1/6
7MB1943-2FA05 ..... 1/6
7MB1943-2FA06 ..... 1/6
7MB1943-2FA07 ..... 1/6
7MB1943-2FA08 ..... 1/11
7MB1943-2FA10 ..... 1/11
7MB1943-2FA11 ..... 1/11
7MB1943-2FA12 ..... 1/11
7MB1943-2FA13 ..... 1/11
7MB1943-2FA14 ..... 1/11
7MB1943-2FA15 ..... 1/11
7MB1943-2FA16 ..... 1/11
7MB1943-2FB01 ..... 1/3
7MB1943-2FB02 ..... 1/3
7MB1943-2FC01 ..... 1/4
7MB1943-2FC02 ..... 1/4
7MB1943-2FE02 ..... 1/11
7MB1943-2FE03 ..... 1/11
7MB1943-2FE04 ..... 1/11
7MB1943-2FE06 ..... 1/11
7MB1943-2FE07 ..... 1/11
7MB1943-2FE08 ..... 1/11
7MB1943-2FE12 ..... 1/11
7MB1943-2FE14 ..... 1/11
7MB1943-2FE20 ..... 1/11
7MB1943-2FE21 ..... 1/11
7MB1943-2FE22 ..... 1/11
7MB1943-2FE23 ..... 1/11

7MB1943-3..

7MB1943-3AA00 ..... 2/2
7MB1943-3AA02 ..... 2/2
7MB1943-3AA04 ..... 2/2
7MB1943-3AA20 ..... 4/13
7MB1943-3AA22 ..... 4/13
7MB1943-3AA26 ..... 4/19
7MB1943-3AA27 ..... 4/19
7MB1943-3AA28 ..... 4/19
7MB1943-3AC40 ..... 4/19
7MB1943-3AC41 ..... 4/19
7MB1943-3BB45 ..... 4/19
7MB1943-3BB46 ..... 4/19
7MB1943-3BB47 ..... 4/19
7MB1943-3BB48 ..... 4/19
7MB1943-3BB50 ..... 4/19
7MB1943-3BB53 ..... 4/19
7MB1943-3BB54 ..... 4/19
7MB1943-3BB55 ..... 4/20
7MB1943-3BB56 ..... 4/20
7MB1943-3BB57 ..... 4/20
7MB1943-3BB58 ..... 4/20
7MB1943-3BB60 ..... 4/19
7MB1943-3CA10 ..... 2/3
7MB1943-3CA15 ..... 2/3
7MB1943-3CA16 ..... 2/3
7MB1943-3CA17 ..... 2/3
7MB1943-3CA20 ..... 2/3
7MB1943-3CB01 ..... 2/4
7MB1943-3CB11 ..... 2/4
7MB1943-3CB17 ..... 2/4
7MB1943-3CB18 ..... 2/4

C79127-...

C79127-Z400-A1 ..... 4/2

LZS:...

LZS:RT4A4L24 ..... 4/11

© Siemens 2023

1. General Provisions

By using this catalog you can purchase products (hardware, software and services) described therein from Siemens Aktiengesellschaft subject to the following Terms and Conditions of Sale and Delivery (hereinafter referred to as "T&C"). Please note that the scope, the quality and the conditions for supplies and services, including software products, by any Siemens entity having a registered office outside Germany, shall be subject exclusively to the General Terms and Conditions of the respective Siemens entity. The following T&C apply exclusively for orders placed with Siemens Aktiengesellschaft, Germany.

1.1 For customers with a seat or registered office in European Union

For customers with a seat or registered office in European Union, the following terms and conditions apply subordinate to T&C:

- for products, which include specific terms and conditions in the description text, these specific terms and conditions shall apply and subordinate thereto,
- for stand-alone software products and software products forming a part of a product or project, the "General License Conditions for Software Products for Automation and Drives for Customers with a Seat or registered Office in Germany"[1)] and/or
- for consulting services the “Allgemeine Geschäftsbedingungen für Beratungsleistungen der Division DF – Deutschland” (available only in German) and/or
- for other services, the „Supplementary Terms and Conditions for Services (“BL”)[1)] and/or
- for other supplies the "General Conditions for the Supply of Products and Services of the Electrical and Electronics Industry"[1)].
  In case such supplies should contain Open Source Software, the conditions of which shall prevail over the "General Conditions for the Supply of Products and Services of the Electrical and Electronics Industry"[1)], a notice will be contained in the scope of delivery in which the applicable conditions for Open Source Software are specified. This shall apply mutatis mutandis for notices referring to other third party software components.

1.2 For customers with a seat or registered office outside European Union

For customers with a seat or registered office outside European Union, the following terms and conditions apply subordinate to T&C:

- for products, which include specific terms and conditions in the description text, these specific terms and conditions shall apply and subordinate thereto,
- for consulting services the "Standard Terms and Conditions for Consulting Services of the Division DF for Customers with a Seat or Registered Office Outside of Germany"[1)] and/or
- for other services the "International Terms & Conditions for Services"[1)] supplemented by "Software Licensing Conditions"[1)] and/or
- for other supplies of hard- and software the "International Terms & Conditions for Products"[1)] supplemented by "Software Licensing Conditions"[1)]

1.3 For customers with master or framework agreement

To the extent our supplies and/or services offered are covered by an existing master or framework agreement, the terms and conditions of that agreement shall apply instead of T&C.

2. Prices

The prices are in € (Euro) ex point of delivery, exclusive of packaging.

The sales tax (value added tax) is not included in the prices. It shall be charged separately at the respective rate according to the applicable statutory legal regulations.

Prices are subject to change without prior notice. We will charge the prices valid at the time of delivery.

To compensate for variations in the price of raw materials (e.g. silver, copper, aluminum, lead, gold, dysprosium and neodym), surcharges are calculated on a daily basis using the so-called metal factor for products containing these raw materials.
A surcharge for the respective raw material is calculated as a supplement to the price of a product if the basic official price of the raw material in question is exceeded.

The metal factor of a product indicates the basic official price (for those raw materials concerned) as of which the surcharges on the price of the product are applied, and with what method of calculation.

An exact explanation of the metal factor can be downloaded at:

https://mall.industry.siemens.com/legal/ww/en/terms_of_trade_en.pdf

To calculate the surcharge (except in the cases of dysprosium and neodym), the official price from the day prior to that on which the order was received or the release order was effected is used.

To calculate the surcharge applicable to dysprosium and neodym ("rare earths"), the corresponding three-month basic average price in the quarter prior to that in which the order was received or the release order was effected is used with a one-month buffer (details on the calculation can be found in the explanation of the metal factor).

3. Additional Terms and Conditions

The dimensions are in mm. In Germany, according to the German law on units in measuring technology, data in inches apply only to devices for export.

Illustrations are not binding.

Insofar as there are no remarks on the individual pages of this catalog – especially with regard to data, dimensions and weights given – these are subject to change without prior notice.

[1)] The text of the Terms and Conditions of Siemens AG can be downloaded at
https://mall.industry.siemens.com/legal/ww/en/terms_of_trade_en.pdf

© Siemens 2023

4. Export Regulations

We shall not be obligated to fulfill any agreement if such fulfillment is prevented by any impediments arising out of national or international foreign trade or customs requirements or any embargoes and/or other sanctions.

Export may be subject to license. We shall indicate in the delivery details whether licenses are required under German, European and US export lists.

Our products are controlled by the U.S. Government (when labeled with "ECCN" unequal "N") and authorized for export only to the country of ultimate destination for use by the ultimate consignee or end-user(s) herein identified. They may not be resold, transferred, or otherwise disposed of, to any other country or to any person other than the authorized ultimate consignee or end-user(s), either in their original form or after being incorporated into other items, without first obtaining approval from the U.S. Government or as otherwise authorized by U.S. law and regulations. Products labeled with "AL" unequal "N" are subject to European / national export authorization.

The export indications can be viewed in advance in the description of the respective goods on the Industry Mall, our online catalog system. Only the export labels "AL" and "ECCN" indicated on order confirmations, delivery notes and invoices are authoritative.

Products without label, with label "AL:N" / "ECCN:N", or label "AL:9X9999" / "ECCN: 9X9999" may require authorization from responsible authorities depending on the final end-use, or the destination.

If you transfer goods (hardware and/or software and/or technology as well as corresponding documentation, regardless of the mode of provision) delivered by us or works and services (including all kinds of technical support) performed by us to a third party worldwide, you shall comply with all applicable national and international (re-)export control regulations. In any event of such transfer of goods, works and services you shall comply with the (re-) export control regulations of the Federal Republic of Germany, of the European Union and of the United States of America.

Prior to any transfer of goods, works and services provided by us to a third party you shall in particular check and guarantee by appropriate measures that

- there will be no infringement of an embargo imposed by the European Union, by the United States of America and/ or by the United Nations by such transfer, by brokering of contracts concerning those goods, works and services or by provision of other economic resources in connection with those goods, works and services, also considering the limitations of domestic business and prohibitions of by-passing those embargos;
- such goods, works and services are not intended for use in connection with armaments, nuclear technology or weapons, if and to the extent such use is subject to prohibition or authorization, unless required authorization is provided;
- the regulations of all applicable Sanctioned Party Lists of the European Union and the United States of America concerning the trading with entities, persons and organizations listed therein are considered.

If required to enable authorities or us to conduct export control checks, you, upon request by us, shall promptly provide us with all information pertaining to the particular end customer, the particular destination and the particular intended use of goods, works and services provided by us, as well as any export control restrictions existing.

You acknowledge that under the EU embargo regulations against Iran, Syria and Russia respectively the sale of certain listed goods and related services is subject to authorization by the competent export control authorities of the European Union. If (i) the goods or services ordered by you are destined for Iran, Syria or Russia, and (ii) the contract for our supplies and/or services is subject to prior authorization of the competent export control authorities of the European Union, the contract between you and us shall come into force in this respect only upon granting of such authorization.

The products listed in this catalog may be subject to European/German and/or US export regulations. Any export requiring approval is therefore subject to authorization by the relevant authorities.

Errors excepted and subject to change without prior notice.

© Siemens 2023

Notes

© Siemens 2021

Easy product selection and ordering: Industry Mall

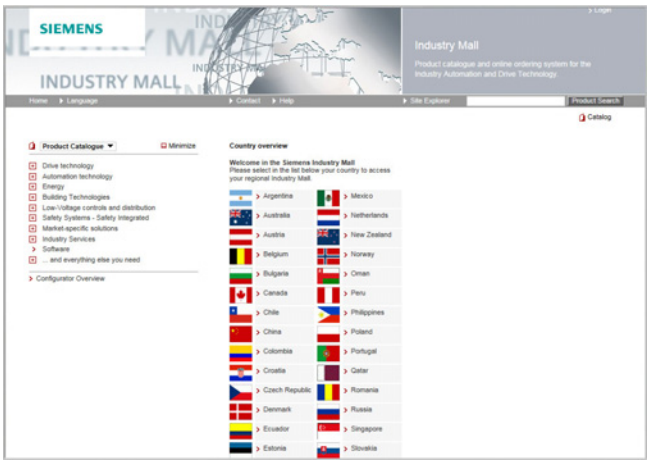

Industry Mall

The Industry Mall is a Siemens AG Internet ordering platform. It provides you with online access to a comprehensive product spectrum that is presented in an informative, well-organized way.

Powerful search functions help you select the required products, while configurators enable you to configure complex product and system components quickly and easily. CAx data are also available for you to use.

Data transfer allows the entire procedure, from selection through ordering to tracking and tracing, to be carried out online. Availability checks, individual customer discounting, and quotation preparation are also possible.

www.siemens.com/industrymall

Downloading catalogs

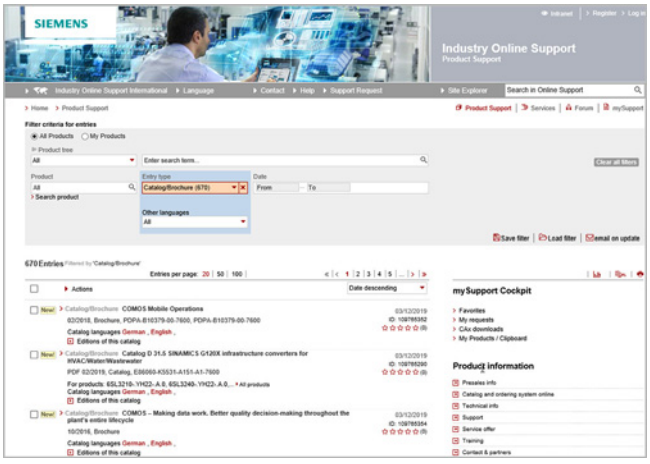

Siemens Industry Online Support

You can download catalogs and brochures in PDF format from Siemens Industry Online Support without having to register.

The filter box makes it possible to perform targeted searches.

www.siemens.com/industry-catalogs

Ordering printed catalogs



Please contact your local Siemens branch if you are interested in ordering printed catalogs.
Addresses can be found at
www.siemens.com/automation-contact

© Siemens 2021

Get more information

All the latest information on process analytical instruments can be found on the internet at:
www.siemens.com/processanalytics

Siemens AG
Process Industries and Drives
Process Automation
76181 Karlsruhe
Germany

Article no. PDF (E86060-K3511-A100-B5-7600)
KG 1121 PDF 66 En
Produced in Germany
© Siemens AG 2021

The information provided in this catalog contains descriptions or characteristics of performance which in case of actual use do not always apply as described or which may change as a result of further development of the products. An obligation to provide the respective characteristics shall only exist if expressly agreed in the terms of contract. Availability and technical specifications are subject to change without notice.

All product designations may be trademarks or product names of Siemens AG or supplier companies whose use by third parties for their own purposes could violate the rights of the owners.

Security information

Siemens provides products and solutions with industrial security functions that support the secure operation of plants, systems, machines and networks.

In order to protect plants, systems, machines and networks against cyber threats, it is necessary to implement – and continuously maintain – a holistic, state-of-the-art industrial security concept. Siemens' products and solutions constitute one element of such a concept.

Customers are responsible for preventing unauthorized access to their plants, systems, machines and networks. Such systems, machines and components should only be connected to an enterprise network or the internet if and to the extent such a connection is necessary and only when appropriate security measures (e.g. firewalls and/or network segmentation) are in place.

For additional information on industrial security measures that may be implemented, please visit
https://www.siemens.com/industrialsecurity

Siemens' products and solutions undergo continuous development to make them more secure. Siemens strongly recommends that product updates are applied as soon as they are available and that the latest product versions are used. Use of product versions that are no longer supported, and failure to apply the latest updates may increase customer's exposure to cyber threats.

To stay informed about product updates, subscribe to the Siemens Industrial Security RSS Feed under
https://www.siemens.com/industrialsecurity