© Siemens AG 2024

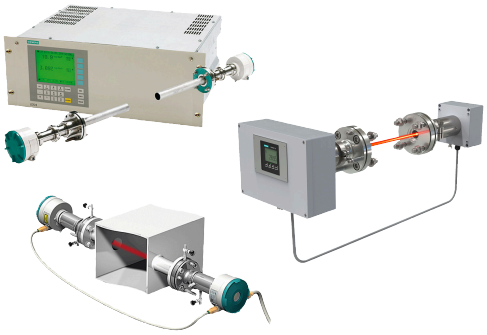

2/2	**Introduction**
2/3	**SITRANS SL (in situ O2 gas analyzer)**
2/22	**SITRANS TDL**
2/31	**LDS 6**
2/40	19" central unit
2/50	Optics enclosure CD 6
2/61	Suggestion for spare parts

© Siemens AG 2024

Overview

Process gas analyzers are used for continuous determination of the concentrations of one or more gases in a gas mixture. Determination of the concentration of gases in a process is used to control and monitor process flows, and is therefore decisive for the automation and optimization of processes and ensuring product quality. In addition, process gas analyzers are used to check emissions, thus making an important contribution to environmental protection, as well as for ensuring compliance with statutory directives.

In situ analytical procedures feature physical measurements in the process gas stream directly in the actual process gas line. In contrast to extractive gas analysis, a sample is not taken and routed on to the analyzer via a sample line and sample preparation. Only in exceptional cases, the process conditions make it necessary to condition the sample gas stream in a bypass line with respect to process temperature, pressure and/or optical path length. Further conditioning of the process gas, such as drying or dust precipitation, is unnecessary. The analyzer carrying out in situ measurements must always take into account changing process conditions (if these occur) and be able to automatically process them in the calibration model. Computed temperature and pressure compensation is frequently required for this. In addition, the analyzer must be extremely rugged since its sensors have direct contact with the process gas. The fast and non-contact measurement of gas concentrations directly in the process is the domain of in situ diode laser gas analyzers.

The gas analyzer LDS 6 combines the compact and service-friendly design, simple operation and network capability of the series 6 analyzers with the well-known exceptional performance data of in situ gas analysis - namely high ruggedness and availability as well as low maintenance - by using diode laser technology and fiber-optics. Up to three CD 6 in situ optics enclosures (which are also optionally available in an intrinsically safe version for operation in hazardous zones) can be combined with an LDS 6 analyzer in the compact 19" rack unit enclosure. The distance between the analyzer's control unit - typically in an existing instrument room or the process plant's control room - and the max. three measuring points can be up to 700 m in each case.

The SITRANS SL gas analyzer for highly sensitive measurement of oxygen has a more integrated design without fiber-optic cables and with only one pair of cross-ducts sensors - a transmitter unit and a detector unit. In this case, the detector has a local user interface (LUI) which is controlled using IR remote control.

A maintenance-free reference gas cell integrated in both analyzers drastically reduces the need for recalibration (SITRANS SL) or even makes its superfluous (LDS 6). Remote scanning and diagnostics of the devices is possible using the Ethernet interface present as standard.

The list of gas components measurable using NIR diode laser technology already comprises:

- For the SITRANS TDL analyzer:
  - CO, CO_2, CH_4, H_2, HCHO, HCN, HCl, HF, H_2O, H_2S, NH_3, NO, NO_2, O_2, SO_2, SO_3
  - More gas components on request
- For the LDS 6 analyzer:
  - NH_3, HCl, HF, H_2O, CO, CO_2
  - More gas components on request
- For the SITRANS SL analyzer:
  - O_2

Gas measurements with diode lasers feature exceptional selectivity and flexibility. Neither high process temperatures nor high and varying concentrations of particles in the gas have an influence on the quality of the result within wide ranges. For example, it is possible with the LDS 6 to determine trace concentrations of NH_3, HCl or HF directly in moist process gases even before any gas purification stage.

Overview (continued)

These features together with fast measurements free of dead times mean that diode laser gas analysis with the devices SITRANS TDL, LDS 6 and SITRANS SL is an extremely interesting alternative to established extractive analyses.

More information

Supplied product documentation on DVD and safety notes



The scope of delivery of the Siemens products for process analytics includes a multilingual instruction sheet with **safety notes** as well as a uniform **DVD - "Analytical products"**.

This DVD contains the most important manuals and certificates for the Siemens process analytics portfolio. The delivery may also contain product-specific or order-specific printed materials. For more information, see section 7 "Appendix".

Download catalogs

The entire documentation is available for download free of charge in various languages at:

http://www.siemens.com/processanalytics/documentation

Certificates

All available certificates are listed on the internet at:
http://www.siemens.com/processanalytics/certificate

© Siemens AG 2024

Overview

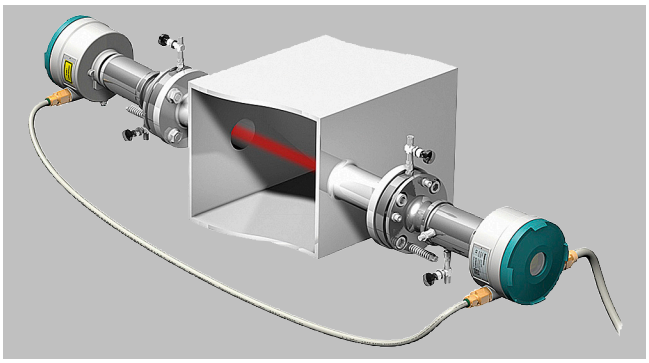

SITRANS SL is a diode laser gas analyzer with a measuring principle based on the specific light absorption of different gas components. SITRANS SL is suitable for fast, non-contact measurement of gas concentrations in process or flue gases. An analyzer consisting of transmitter and detector units (sensors) is used for each measuring point. The hardware for further processing of the measured signal into a concentration value, as well as the monitoring, control and communication functions, are integrated in these two main modules. The sensors are designed for operation under harsh environmental conditions.

Benefits

The in situ SITRANS SL gas analyzer features high operational availability, unique analytical selectivity, and a wide range of possible applications. SITRANS SL permits measurement of a gas component directly in the process:

- With high dust load
- In hot, humid, corrosive, explosive, or toxic gases
- In applications showing strongly varying gas compositions
- Under harsh ambient conditions at the measuring point
- Highly selective, i.e. mostly without cross-sensitivities

Special features of the SITRANS SL:

- Low installation workload
- Minimum maintenance requirements
- Extremely rugged design
- High long-term stability through built-in, maintenance-free reference gas cell
- Real-time measurements

Moreover, the device provides warning and error messages in the following situations:

- When maintenance is required
  - With large variations in the reference signal
  - With poor signal quality
- If the transmission violates a minimum or maximum value

Application

Applications

- Control of combustion processes
- Process optimization
- Plant and operator safety
- Process measurements in all types of power and combustion plants
- Process control
- Explosion protection
- Measurements in corrosive and toxic gases
- Quality control

Sectors

- Chemical and petrochemical plants
- Power plants
- Waste incinerators
- Iron and steel industry

© Siemens AG 2024

Design

The SITRANS SL gas analyzer consists of a pair of cross-duct sensors, a transmitter unit and a detector unit, both with identical mechanical dimensions. The complete analyzer is integrated in these two enclosures. The transmitter unit contains the laser source whose light is transmitted to the detector through the measurement path. The detector unit contains a photodetector including detector electronics as well as a reference cell. The detector unit is connected to the transmitter unit by means of a sensor connecting cable. A further connecting cable on the detector is used to connect the power supply and the communications interfaces. The detector enclosure contains a local user interface (LUI) with an LC display which can be read through a window in the enclosure cover. The local user interface is operated by remote control.

Transmitter and detector units

Special features of the transmitter and detector units:

- In situ cross-duct sensors, designed as transmitter and detector units, connected via sensor connecting cable
- Powder-coated aluminum; stainless steel
- Degree of protection IP65
- Adjustable process connection plates
- Flange sizes (provided by customer): DN50/PN25, DN50/PN40, ANSI 4"/150 lbs
- Purging gas connections (see Purging)
- Optional: Explosion-protected version in accordance with
  - Ex II 2G Ex db e op is IIC T6 Gb
    Ex II 2D Ex tb IIIC T 85°C Db
  - FM USA:
    XP Class I Div 1 Groups A, B, C, D T6 Ta = 55°C
    DIP Class II,III Div 1 Groups E, F, G T6 Ta = 55°C
    Class I, Zn 1, AEx db IIC T6 Gb Ta = 55°C
    Zn 21, AEx tb IIIC T85°C Ta = 55°C
  - FM Canada:
    XP Class I Div 1 Groups C, D T6 Ta = 55°C
    DIP Class II,III Div 1 Groups E, F, G T6 Ta = 55°C
    Class I, Zn 1, Ex db IIC T6 Ta = 55°C
    Zn 21, Ex tb IIIC T85°C Db Ta = 55°C
  - NEPSI Ex:
    Ex d e op is IIC T6 Gb
    Ex tD A21 IP65 T85°C
  - TIIS Japan:
    Ex db II C T6 Gb

Design (continued)

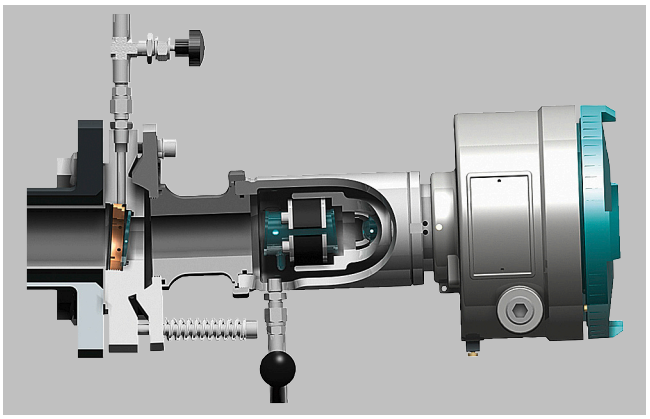

SITRANS SL, detector unit

Parts in contact with the process gas

Only the stainless steel flange of the sensor with borosilicate window and FFKM gasket comes in contact with the process gas. This has optional purging gas connections for purging the process gas side with an appropriate gaseous medium.

Display and operator panel

Special features of the detector unit:

- Display for simultaneous output of measurement result and device status
- LED backlighting of display
- Remote control with infrared interface for simplified parameterization and operation for safe implementation in hazardous zones
- Menu-driven operation for parameterization and diagnostics

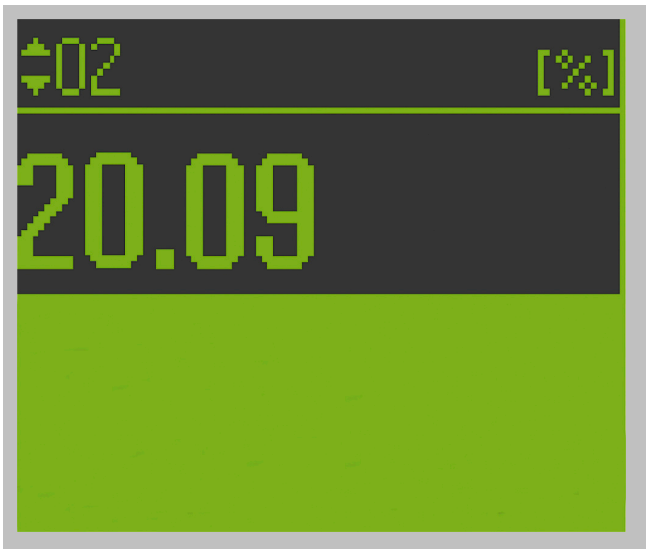

Local user interface (LUI) of SITRANS SL in the detector unit (display of measured value)

© Siemens AG 2024

Design (continued)

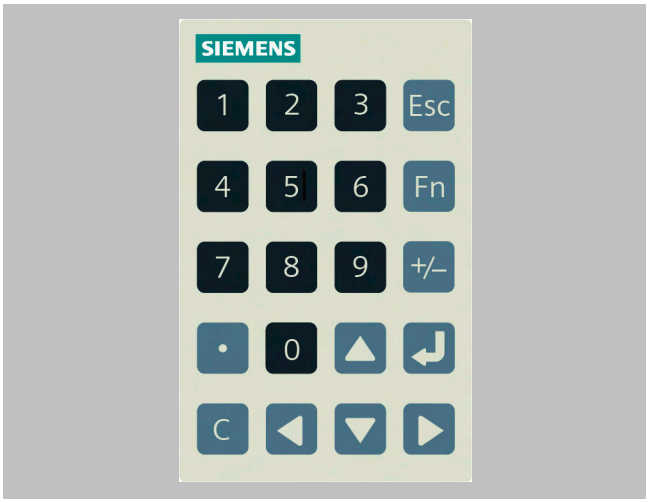

Remote control keypad for SITRANS SL

Connection cables

SITRANS SL is supplied as standard without connection cables. These must be provided by the customer or are available as accessories. Exception: The standard ATEX version is supplied with pre-installed cabling.

The sensor connecting cable connects the transmitter and detector units of the analyzer.

The sensor connecting cable is offered as a cable set for the ATEX version as standard, and for non-Ex applications as an option, in lengths of 5, 10 and 25 m. This (optional) cable set also enables permanent installation of an Ethernet cable used for service and maintenance purposes.

A rugged cable sleeve should be used as UV protection for installations in open cable ducts or channel systems.

The statutory directives must be observed in the event of installation in hazardous areas.

For the ATEX version of SITRANS SL, the sensor connecting cable must be connected between the two Ex-e junction boxes secured on the transmitter and detector units.

Inputs/outputs

- 2 analog inputs (4 to 20 mA) for process gas temperature and pressure
- 2 analog outputs (4 to 20 mA) for gas concentration or for concentration and transmission
- 1 configurable digital input
- 2 configurable digital outputs (display of errors, maintenance required, function monitoring, alarms for upper limit violations of measured value or transmission)
- 1 Ethernet 10Base-TX port, only for servicing and maintenance

Optional

1 Modbus interface with

- Output of concentration as cyclic data
- Alarm output, alarm classification
- Input for temperature and/or pressure data for compensation

1 PROFIBUS-DP interface with

- Output of concentration as cyclic data

Design (continued)

- Alarm output, alarm classification
- Input for temperature and/or pressure data for compensation

The PROFIBUS DP protocol provides DPV0, cyclic data. Measured values are provided with additional quality data.

Note:

In contrast to the other interfaces, the Ethernet plug-in connector on standard non-Ex devices is only accessible following removal of the enclosure cover of the detector unit. With the help of the sensor cable set (optional with non-Ex devices), an Ethernet cable can be permanently installed via the junction box of the sensor connecting cable. The Ethernet connection via the sensor connecting cable can also only be used for temporary service and maintenance purposes.

CAUTION:

In an Ex environment, Ethernet connections may only be made or removed with the permission of the plant operator!

© Siemens AG 2024

Function

Operating principle

SITRANS SL is a gas analyzer employing single-line molecular absorption spectroscopy. A diode laser emits a beam of infrared light which passes through the process gas and is received by a detector unit. The wavelength of the laser diode output is tuned to a gas-specific absorption line. The laser continuously scans this single absorption line with a very high spectral resolution. The degree of absorption and the line shape are used for the evaluation.

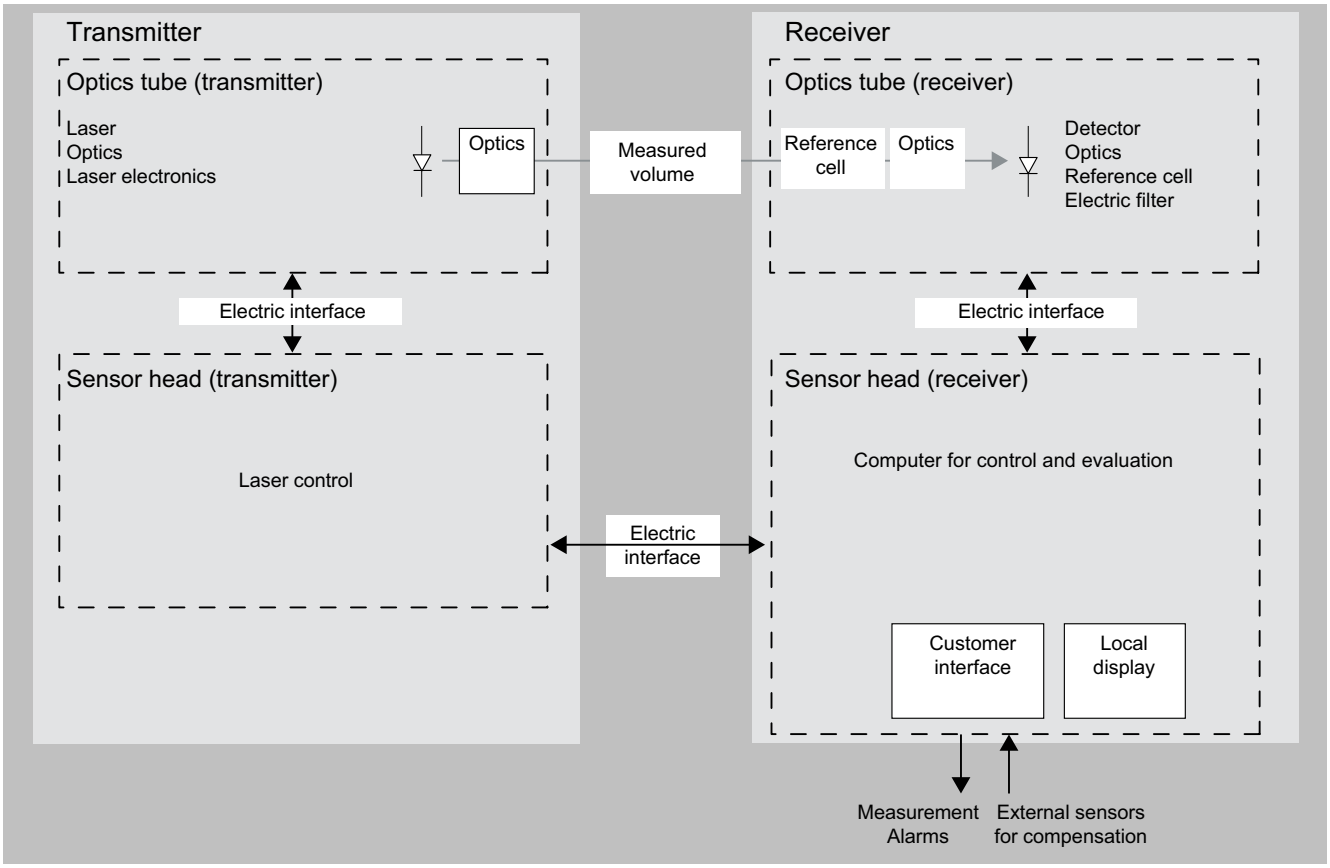

Basic design of the SITRANS SL

The field device design of the SITRANS SL in situ gas analyzer consists of a transmitter unit and a detector unit. The light which is not absorbed by the sample is measured in the detector unit. The concentration of the gas component is determined from the absorption.

The SITRANS SL analyzer measures a single gas component by means of the absorption capacity of a single fully resolved molecular absorption line.

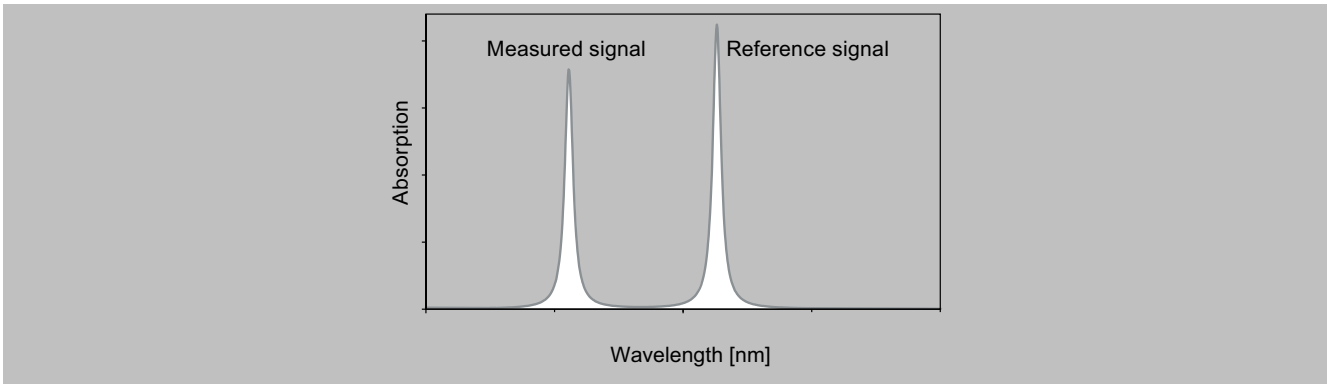

Absorption spectrum of measured signal and reference signal with SITRANS SL

© Siemens AG 2024

Function (continued)

SITRANS SL is designed for measuring oxygen (O_2) with high sensitivity.

Typical application specifications	
Oxygen concentration	0 ... 100 vol%
Process pressure/temperature conditions	700 ... 5 000 hPa (absolute)/0 ... 200 °C 900 ... 1 100 hPa (absolute)/0 ... 600 °C

The measuring performance of the SITRANS SL depends, for example, on the actual, individual process conditions with regard to concentration ranges, pressure and temperature.

An internal reference cell is used to constantly check the stability of the spectrometer.

The self-calibration of the analyzer is therefore valid for one year without the need for external re-calibration using calibration gases.

Configuration

A feature of the in situ analytical procedure is that the physical measurement takes place directly in the process gas stream and directly in the actual process gas line. All process parameters such as gas matrix, pressure, temperature, moisture, dust load, flow velocity and mounting orientation can influence the measuring properties of the SITRANS SL and must therefore be investigated for each new application.

The standard applications listed in the ordering data for the SITRANS SL are distinguished in that the typical process conditions are adequately well-known and documented. If you cannot find your application among the standard applications, please contact Siemens. We will be pleased to check your possible individual application of the SITRANS SL. You can find an application questionnaire on the SITRANS SL product page on the internet: http://www.siemens.com/insituquestionnaire

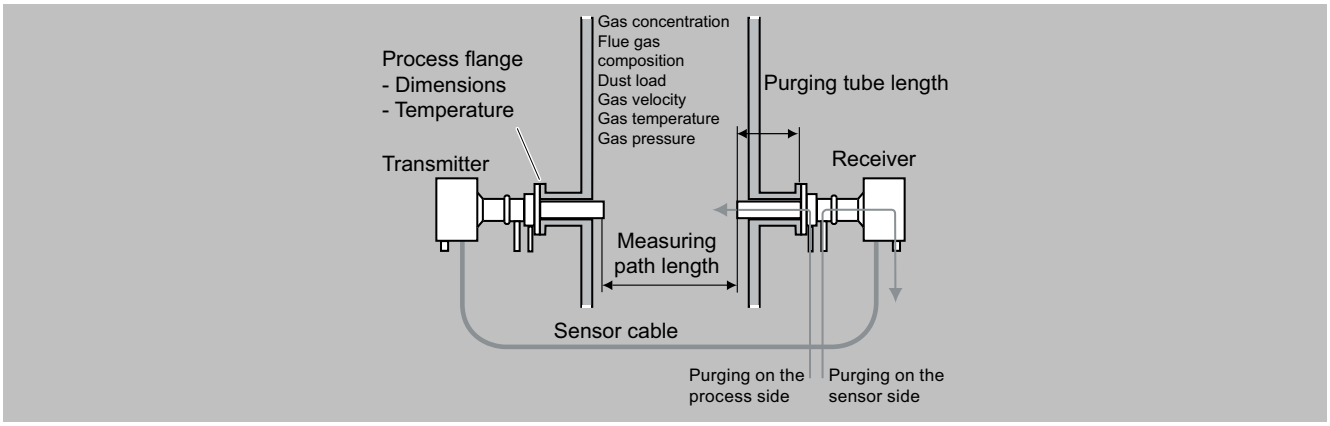

Typical cross-duct arrangement of the SITRANS SL

The SITRANS SL can be optionally purged on the process side using appropriate purging gases to prevent contamination of the sensor optics on the process side. Purging tubes on the sensor heads, which slightly extend into the process gas stream, define the effective measuring path length.

Influences on the measurement

Dust load

As long as the laser beam is able to generate a suitable detector signal, the dust load in the process gas does not influence the analytical result. By applying a dynamic background correction, measurements can be carried out without any negative impact. Under optimal conditions, the SITRANS SL can cope with dust loads up to 20 g/Nm³ and up to a measured path length of 8 m. The influence of a high dust load is extremely complex, and depends on the optical path length and particle size. The optical damping increases exponentially at longer path lengths. Smaller particles also have a very large influence on the optical damping. With high dust load, long path length and small particle size, the technical support at Siemens should be consulted.

Temperature

The influence of temperature on the absorption line is compensated by a correction file. A temperature signal can be fed into the device from an external temperature sensor. The signal is then used for mathematical correction of the influence of the temperature on the concentration strength. If the process gas temperature remains constant, a static correction can be carried out as an alternative. Without temperature compensation, the relative error caused by changes in the gas temperature has an extensive effect on the measurement (e.g. up to 0.24%/K with the O_2 application). An external temperature signal is therefore recommended in most cases.

Pressure

In addition to the temperature signal, an external pressure signal can be fed to the device to provide complete mathematical compensation for the pressure influence including the density effect. Without compensation, the relative measuring error caused by changes in the process gas pressure is approx. 0.1%/hPa. An external pressure signal is therefore recommended in most cases.

Effective optical path length

As a result of Beer-Lambert's law, the absorption of laser light depends on the optical path length within the sample gas. Therefore the precision of the effective optical path length measurement can have an effect on the precision of the total measurement.

Since the sensor optics on the process side usually have to be purged to keep them clean for a longer period, the expansion of the mixed zone between the purging medium and the process gas as well as the latter's concentration distribution must be considered. In a typical in situ installation with an optical path length of several meters, the influence of the purging gas on the effective path length can be ignored.

The maximum possible path length and dust load mutually affect each other: the higher the dust load in the process, the shorter the max. possible path length.

© Siemens AG 2024

Function (continued)

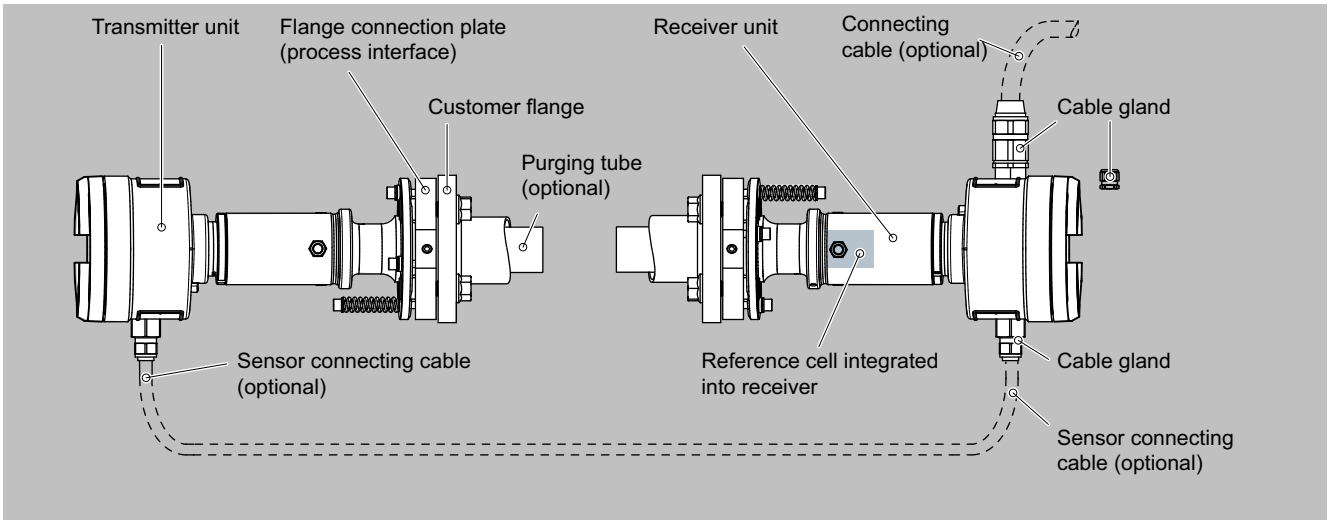

Design of the SITRANS SL system in non-Ex version

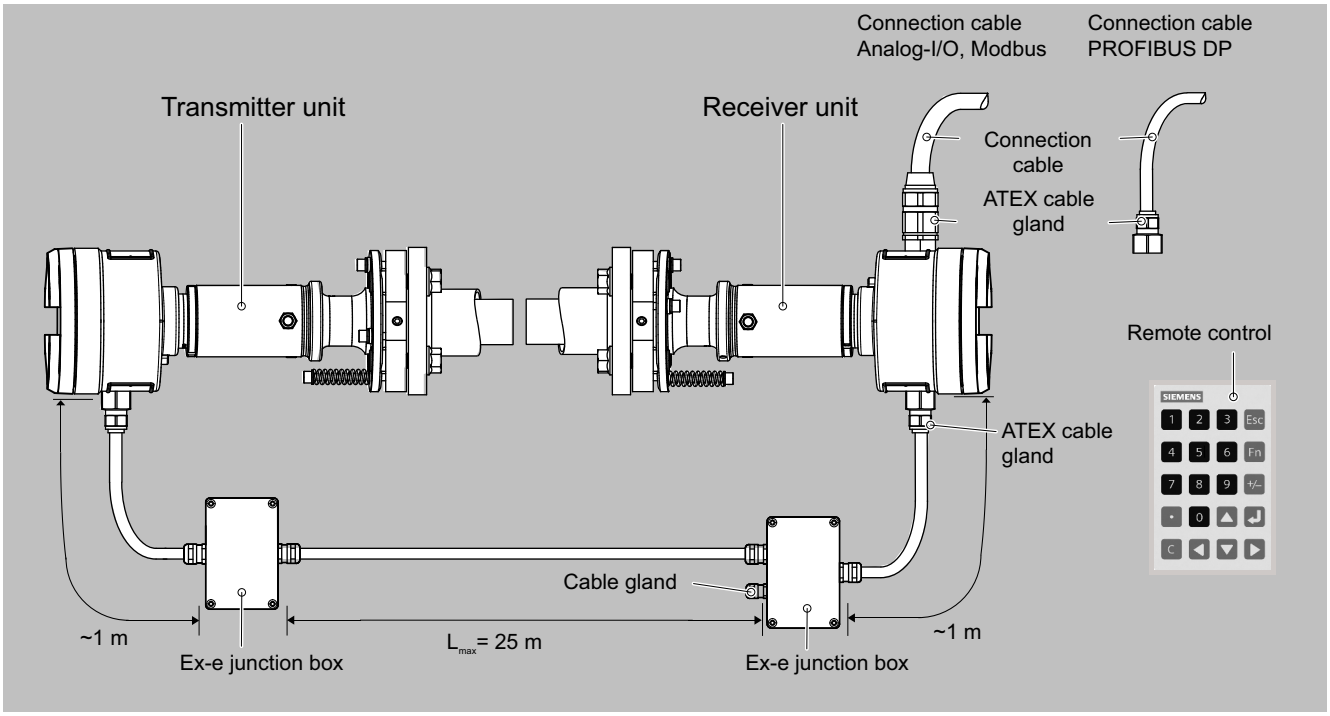

Design of the SITRANS SL system in ATEX version

© Siemens AG 2024

Function (continued)

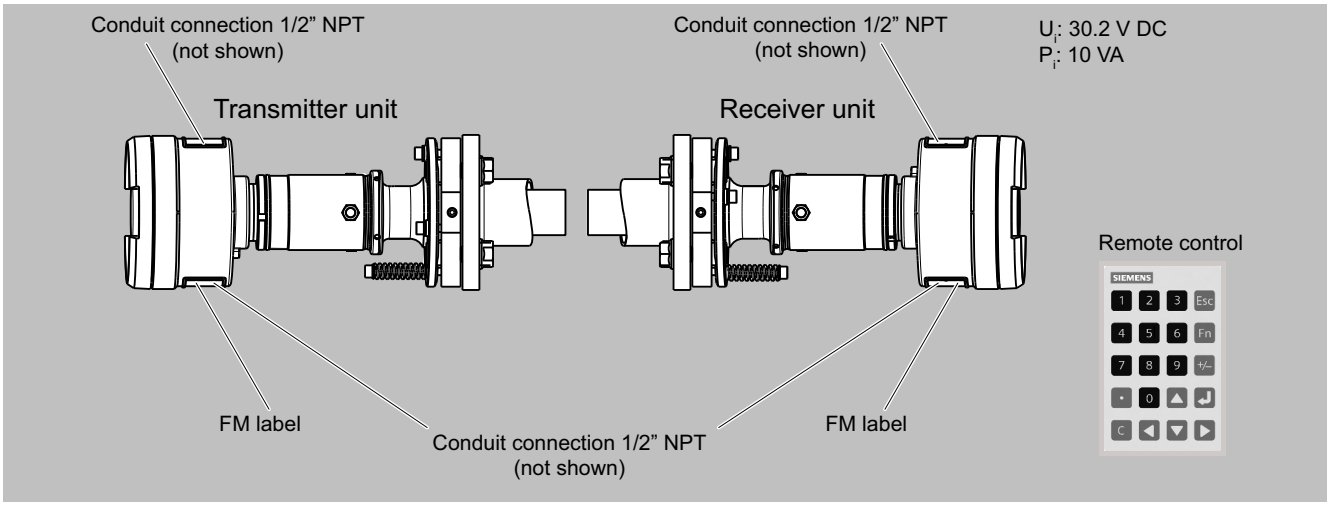

Design of the SITRANS SL system in FM version

The transmitter and detector units are mounted on process flanges provided by the customer. Correct alignment of these flanges must be guaranteed, e.g. by using the optional sensor alignment kit.

Adjustment of the pair of sensors

The flange connection plates (process interface) of the SITRANS SL to the process flanges on the customer side must be correctly aligned so that the laser beam generated by the transmitter hits the photo detector in the detector unit. This is ensured by the transmitter and detector units having a curved surface integrated in the connection plates. The adjustment is carried out by shifting the flanges on these surfaces, through which the symmetry axis is aligned. The axis can be offset by ± 1 degree, which means that the process flanges must be welded onto the process wall with at least this accuracy - see following figure.

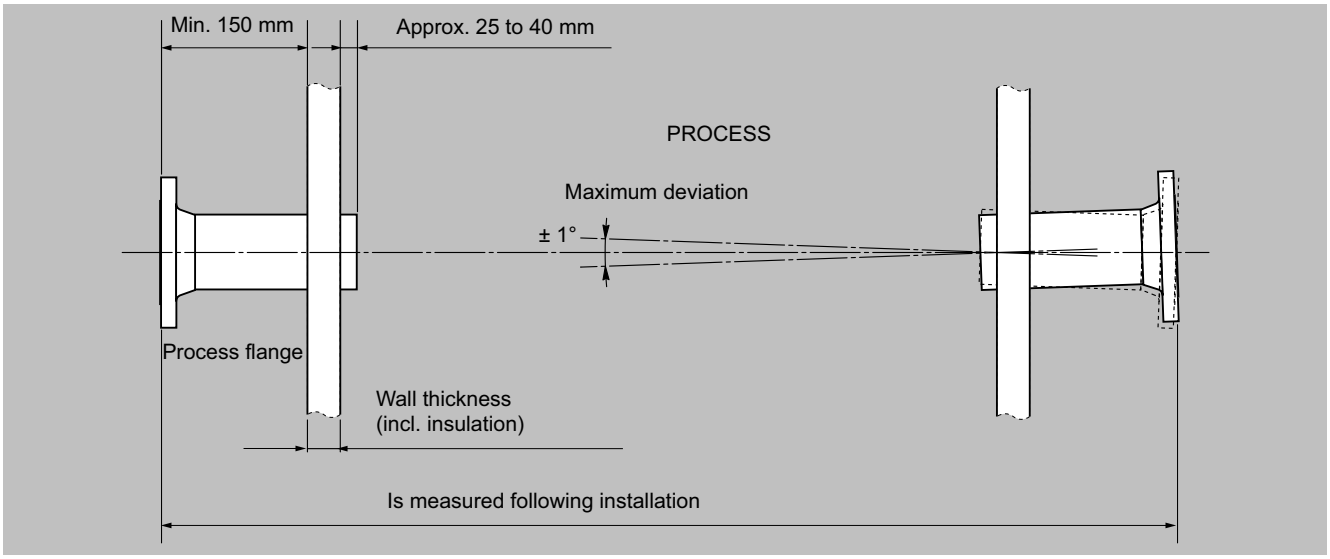

Installation/adjustment requirements for the pair of cross-duct sensors

Purging

The easiest way to avoid condensation and dust deposits on the sensor windows or excessively high thermal stress of the windows and the gasket material as well as the sensor electronics is to purge them with a purging gas (with O_2 application: nitrogen). Purging must be selected depending on the application. The cross-duct sensors can therefore be configured for the respective situation. The application reference table provides recommendations for suitable purging for the standard applications.

If oxygen is to be measured with the SITRANS SL - which is also present in measurable quantities in the ambient air - oxygen-free purging gases must be used, such as nitrogen. It is equally necessary to purge the inside of the sensor heads, since the ambient air must also be displaced here out of the laser beam path. A differentiation is therefore made between purging on the process side and purging on the sensor side.

© Siemens AG 2024

Function (continued)

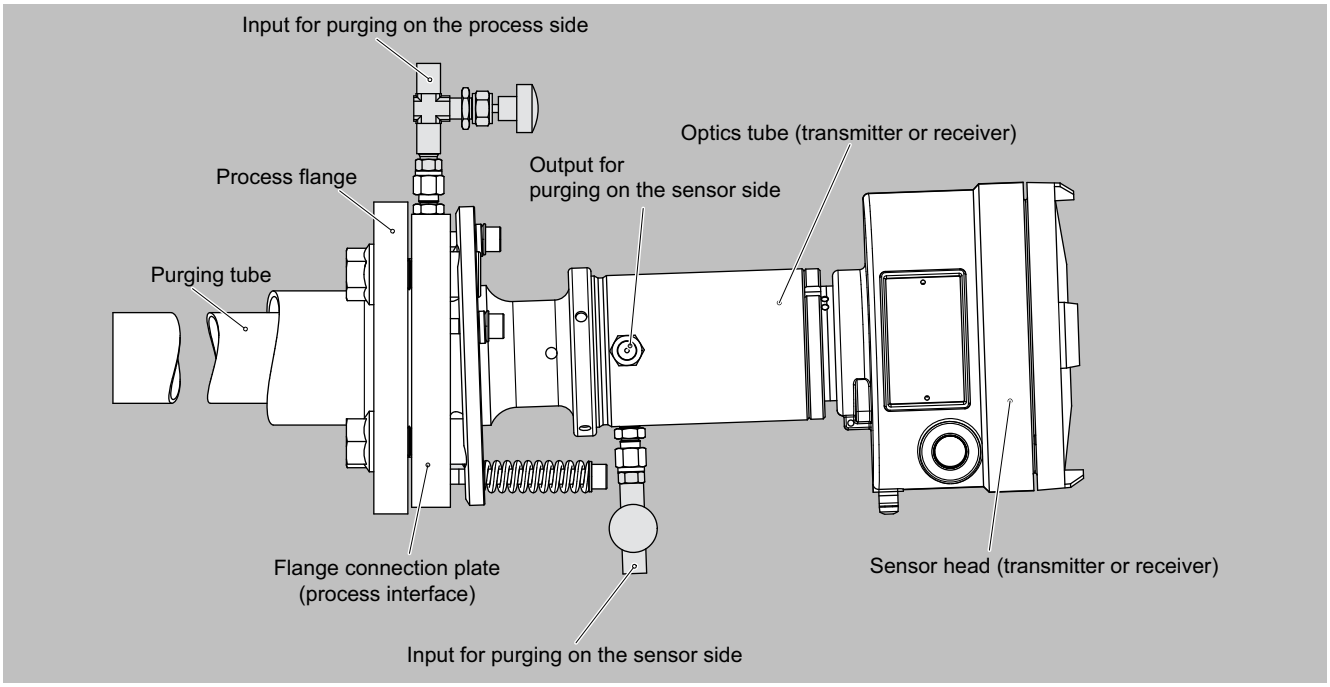

Arrangement for purging on the sensor side of the SITRANS SL

Purging on process side

For purging on the process side, the purging gas flow can be adjusted between 0 and approx. 50 l/min at each sensor head using a needle valve (included in scope of delivery).

Purging on sensor side

This can be combined with the purging on the process side, if required. Purging with nitrogen on the sensor side is almost always necessary for O_2 applications to avoid an offset caused by the oxygen of the air present in the device. The cells in the sensor head are then continuously purged with nitrogen. Particularly when (re)starting the SITRANS SL O_2, a sufficiently high flow of sensor purging gas of approx. 3 to 5 l/min must be provided for several minutes to ensure that all residues of oxygen are removed. The flow of sensor purging gas can subsequently be set to a lower value using the needle valve (included in scope of delivery).

Note

No process gas may flow into the purging gas line!

With purging on the process side, it may be necessary to use non-return valves to ensure no process gas can enter the purging gas line in the event of failure of the purging gas supply. Otherwise, there is a risk of zone entrainment (explosion protection). This applies especially in the case of cascaded process and sensor purging to prevent corrosive process gases from entering the optics enclosure.

Purging tubes

The purging media used on the process side flow through purging tubes into the process gas stream. The pipes extend into the process area by a few centimeters, usually perpendicular to the process gas stream. This means that an exactly defined optical path length is defined through the sample gas. The effective measuring path in the process gas is therefore defined as the distance between the ends of the two purging tubes. The standard length of the purging tubes is 340 mm. To achieve sufficient calibration of the transmitter and detector, the process wall should be max. 150 mm thick.

© Siemens AG 2024

Function (continued)

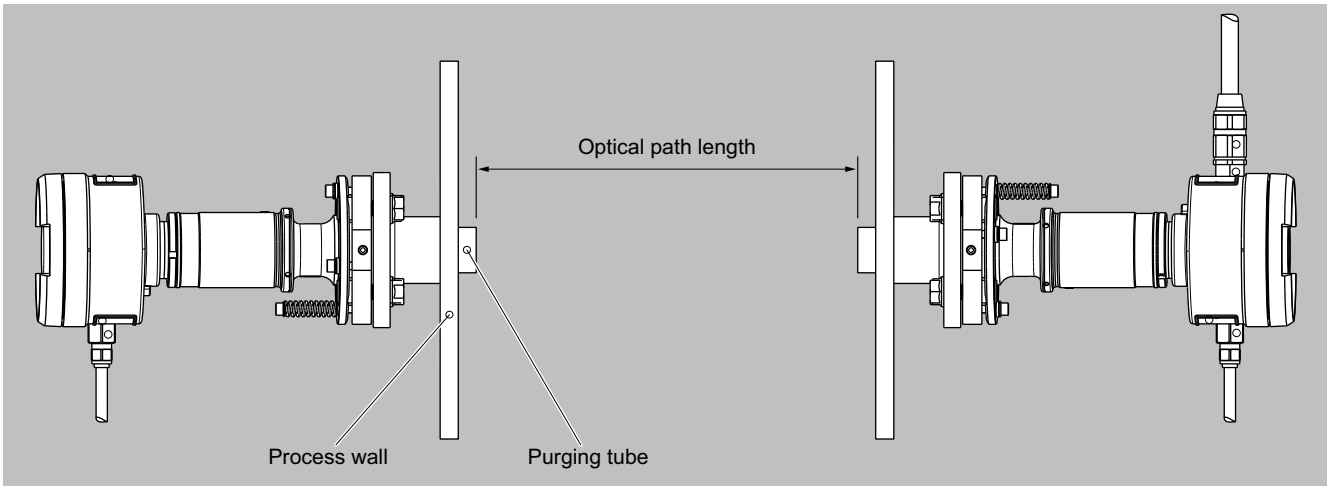

Measurement of the optical path length between the ends of the purging gas tubes

Maintenance and fault messages

The SITRANS SL carries out continuous self-monitoring, and outputs alarms and warnings to indicate maintenance required or a system fault. The information is output as plain text on the LUI display, where symbols identify the category and the severity of the fault.

Alarm categories:

- Maintenance (system must be cleaned or repaired)
- Process value (problem with external sensor, or process conditions outside the permissible range for SITRANS SL)
- Configuration (SITRANS SL is not correctly configured)

Severity:

- Error (measurements could not be carried out)
- Warning (measurements may be inaccurate, or the system will soon shut down measuring mode if an intervention is not made)
- Advanced warning/information (measurements are carried out)

The two binary (relay) outputs can be configured freely for the alarm output.

The response of the analog outputs in the event of an alarm is configurable; possible actions are:

- Off (current measured value is displayed)
- Last measured value (freezing of last value displayed)
- Standard level (setting to predefined value)
- 3 mA (NAMUR NE43 error status)

In addition, the transmission is available as an output variable.

Note

Specific requirements for the measuring point can make the utilization of special sensor equipment necessary. The possibilities for adapting the sensors are:

- Special materials for purging tubes (on request)
- Various types/sizes of sensor flanges
- Explosion-protected sensor configurations

Essential characteristics

- Long-term stabilization by using an internal reference cell; for calibration interval of at least one year
- Dynamic background correction for varying dust loads
- Isolated signal outputs of 4 to 20 mA
- User-friendly, menu-driven operation
- Selectable time constants (response time)
- Password-protected user interface
- I/O operation in accordance with NAMUR recommendations
- Monitoring of overall optical signal transmission
- Sensor enclosure resistant to wear and corrosion
- Simple local operation using remote control unit with numeric keypad and menu prompting

Standard applications

The following table lists the measuring conditions for standard applications. The listed values for the measuring range and detection limit are only approximate values. The exact values at the respective measuring point depend on the totality of all influencing parameters and can be determined by Siemens for the specific case. Note that the values for the detection limit and the maximum measuring range are based on a path length of 1 m. Longer path lengths will improve the detection limit, but not linearly. This is due to limiting effects such as dust load. The maximum applicable measuring ranges can only be used if permitted by the process conditions (e.g. dust load).

© Siemens AG 2024

Function (continued)

Standard application Effective optical path length: 0.3 ... 8 m Dust load[2]: < 50 g/Nm³			Process gas temperature T_{min} ... T_{max}	Process gas pressure p_{min} ...p_{max}	Min. measuring range (with 1 m eff. opt. path length)	Max. measuring range (also dependent on eff. opt. path length: see following column below)
Sample gas component	**Gas code**	**Appl. code**				
O_2	A	B	0 ... 600 °C	900 ... 1 100 hPa	0 ... 1 vol%	0 ... 100 vol%
O_2	A	C	0 ... 200 °C	700 ... 5 000 hPa	0 ... 1 vol%	0 ... 100 vol%

Standard application Effective optical path length: 0.3 ... 8 m Dust load[2]: < 50 g/Nm³			Max. measuring range x path length	DL x path length (under standard conditions[1] without cross-interference of other gases)	Repeatability[3]	Purging gas medium
Sample gas component	**Gas code**	**Appl. code**				
O_2	A	B	75 vol%*m	200 ppmv*m	2% [4]	N_2
O_2	A	C	75 vol%*m	200 ppmv*m	2% [4]	N_2

Reference table: Standard applications. The specified pressures are absolute.
DL = detection limit

1) The specification provided applies at 20 °C and 1013 hPa in a nitrogen atmosphere. In rare cases, a deviating process gas matrix or process conditions can have a negative effect on performance. Contact Siemens to determine the exact performance under your process conditions.
2) With 0.3 m effective optical path length
Average diameter of the dust particles: 15 µm
Specific weight of the dust particles: 650 kg/m³
The influence of dust load is extremely complex and depends on the path length and particle size. The optical damping increases exponentially at longer path lengths. Smaller particles also have a very large influence on the optical damping. With high dust load, long path length and small particle size, the technical support at Siemens should be consulted.
3) Based on measuring range. With stable or externally measured and software-compensated process gas temperature and pressure conditions.
4) 2% of measured value or DL (whichever is greater).

Special applications

In addition to the standard applications, special applications are available on request. If the process conditions deviate from the specifications of the standard applications, special applications are also possible on request.

Complete the application questionnaire which can be found on the internet at http://www.siemens.com/insituquestionnaire:

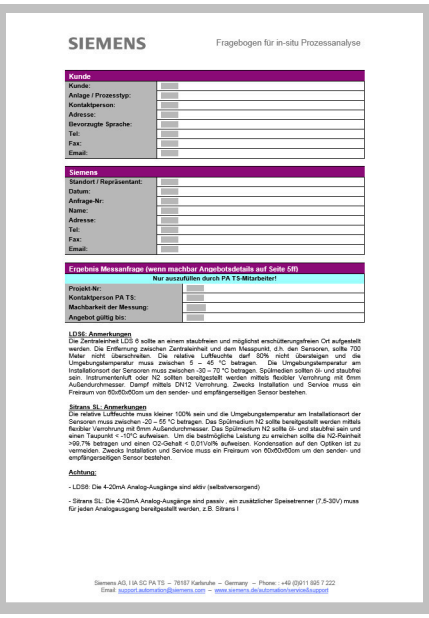
SIEMENS

Fragebogen für in-situ Prozessanalyse

Kunde

Kunde:	
Anlage / Prozesstyp:	
Kontaktperson:	
Adresse:	
Bevorzugte Sprache:	
Tel:	
Fax:	
Email:	

Siemens

Standort / Repräsentant:	
Datum:	
Anfrage-Nr:	
Name:	
Adresse:	
Tel:	
Fax:	
Email:	

Ergebnis Messanfrage (wenn machbar Angebotsdetails auf Seite 5ff)

Nur auszufüllen durch PA TS-Mitarbeiter!

Projekt-Nr:	
Kontaktperson PA TS:	
Machbarkeit der Messung:	
Angebot gültig bis:	

LDS6: Anmerkungen

Die Zentraleinheit LDS 6 sollte an einem staubfreien und möglichst erschütterungsfreien Ort aufgestellt werden. Die Entfernung zwischen Zentraleinheit und dem Messpunkt, d.h. den Sensoren, sollte 700 Meter nicht überschreiten. Die relative Luftfeuchte darf 90% nicht übersteigen und die Umgebungstemperatur muss zwischen 5 – 45 °C betragen. Die Umgebungstemperatur am Installationsort der Sensoren muss zwischen -30 – 70 °C betragen. Spülmedien sollten öl- und staubfrei sein. Instrumentenluft oder N2 sollten bereitgestellt werden mittels flexibler Verrohrung mit 6mm Aussendurchmesser. Dampf mittels DN12 Verrohrung. Zwecks Installation und Service muss ein Freiraum von 60x60x60cm um den sender- und empfängerseitigen Sensor bestehen.

Sitrans SL: Anmerkungen

Die relative Luftfeuchte muss kleiner 100% sein und die Umgebungstemperatur am Installationsort der Sensoren muss zwischen -20 – 55 °C betragen. Das Spülmedium N2 sollte bereitgestellt werden mittels flexibler Verrohrung mit 6mm AuSendurchmesser. Das Spülmedium N2 sollte öl- und staubfrei sein und einen Taupunkt < -10°C aufweisen. Um die bestmögliche Leistung zu erreichen sollte die N2-Reinheit >99.7% betragen und einen O2-Gehalt < 0,01Vol% aufweisen. Kondensation auf den Optiken ist zu vermeiden. Zwecks Installation und Service muss ein Freiraum von 60x60x60cm um den senden- und empfängerseitigen Sensor bestehen.

Achtung:

- LDS6: Die 4-20mA Analog-Ausgänge sind aktiv (selbstversorgend)

- Sitrans SL: Die 4-20mA Analog-Ausgänge sind passiv , ein zusätzlicher Speisetrenner (7,5-30V) muss für jeden Analogausgang bereitgestellt werden, z.B. Sitrans I.

Siemens AG, I IA SC PA TS – 76187 Karlsruhe, – Germany – Phone: +49 (0)911 895 7 222
Email: support.automation@siemens.com – www.siemens.de/automation/service&support

© Siemens AG 2024

Selection and ordering data

SITRANS SL in situ gas analyzer		Article No. 7MB6221-	●	●	●	●	●	-	●	●	●	●
Click on the Article No. for online configuration in the PIA Life Cycle Portal.												
Unavailable combinations are shown in PIA Life Cycle Portal as "not permitted".												
Explosion protection[1]												
Without			0									
Ex II 2 G Ex db e op is IIC T6 Gb Ex II 2 D Ex tb IIIC T85°C Db			1									
FM USA:			2									
Class I, Division 1, Groups A, B, C, D; T6 Ta = 55°C Class II/III, Division 1, Groups E, F, G, T6 Ta = 55°C Class I, Zone 1, AEx db IIC T6 Gb Ta = 55°C Zone 21, AEx tb IIIC T85°C Db Ta = 55°												
FM Canada:												
Class I, Division 1, Groups C, D; T6 Ta = 55°C Class II/III, Division 1, Groups E, F, G, T6 Ta = 55°C Class I, Zone 1 Ex db IIC T6 Gb Ta = 55°C Zone 21, Ex tb IIIC T85°C Db Ta = 55°C												
Measured component												
O_2				A								
Application examples[2]												
Control of combustion processes					B							
Process control, safety monitoring in appropriate plant concepts					C							
Communications interface												
2x analog I/O, 1x DI, 2x DO						0						
PROFIBUS DP						1						
Modbus						2						
Purging tubes, material	**Length**											
No purging tubes							0					
Stainless steel	340 mm						1					
Purging: Process side	**Purging: Sensor side**											
No purging	No purging								0			
No purging	3 ... 5 l/min								1			
0 ... 50 l/min	No purging								2			
0 ... 50 l/min	3 ... 5 l/min								3			
Process connection [3]												
Stainless steel flange (1.4404/316L), connection dimensions ANSI 4"/150 lbs, MAWP (PS) at 20 °C: 232 psi										B		
Stainless steel flange (1.4404/316L), connection dimension DN50/PN25, MAWP (PS) at 20 °C: 2.5 MPa										C		
Stainless steel flange (1.4404/316L), connection dimension DN50/PN40, MAWP (PS) at 20 °C: 4.0 MPa										E		
Without process connection										X		
Sensor cable												
With brass bushing												
• 5 m											A	
• 10 m											B	
• 25 m											C	
With stainless steel gland												
• 5 m											D	
• 10 m											E	
• 25 m											F	
Without cable											X	
Language of the operating software (preset)												
German												0
English												1
French												2
Spanish												3
Italian												4

1) Complete and consistent implementation of the safety concept by the plant operator must be ensured during the commissioning and operation of the in situ SITRANS SL laser spectrometer in hazardous atmospheres.
2) The examples shown represent possible applications where appropriately configured SITRANS SL solutions can be used. The user is responsible for the prevailing conditions (plant concept, possibly redundant, application of appropriate components required in addition, compliance with possible directives, etc.).
3) MAWP: Maximum Allowable Working Pressure.

© Siemens AG 2024

Selection and ordering data (continued)

Options	Order code
Add "**-Z**" to article number and then add order code.	
Settings	
Inspection certificate 3.1 (leak test) in accordance with EN 10204	***C12*** [1]
Inspection certificate 3.1 (material certificate) in accordance with EN 10204	***C13*** [1]
SIL 1 Declaration of Conformity in accordance with standards IEC 61508 / IEC 61511 (for the measured component oxygen in combination with analog interfaces)	***C20*** [1]
Surface free of copper and silicone	***R01***
Special application	***R10 ... R39***
Tag plate, customized inscription	***Y30***
Additional label Special application	***Y31***
Hardware change	***Y33***

[1] In combination with explosion protection according to FM on request

Additional units and spare parts	Article No.	Item No. (see graphic below)
Additional units		
SITRANS SL, calibration verification set O_2	**A5E01000694**	
SITRANS SL, sensor alignment kit	**A5E50918922**	
SITRANS SL, connection box Ex-e for 25-pin connecting cable	**A5E01267567**	
SITRANS SL, connecting cable set analog (for non-Ex)	**A5E03328474**	
SITRANS SL, connecting cable set PROFIBUS DP (for non-Ex)	**A5E03328473**	
SITRANS SL, UV protective hose for outdoor installation, ND = 48 mm per 30 m length	**A5E01714061**	
SITRANS SL, sensor cable set (non-Ex) with cable glands of nickel-plated brass, length: 5 m	**A5E02509347**	**3+4+5**
SITRANS SL, sensor cable set (non-Ex) with cable glands of nickel-plated brass, length: 10 m	**A5E02528048**	**3+4+5**
SITRANS SL, sensor cable set (non-Ex) with cable glands of nickel-plated brass, length: 25 m	**A5E02528052**	**3+4+5**
Spare parts		
SITRANS SL, process connection plate (1 unit) for customer flange size: DN 50/PN 10 ... 40 including gasket	**A5E01009881**	
SITRANS SL, gasket for DN 50/PN 10 ... 40	**A5E02522036**	
SITRANS SL, process connection plate (1 unit) for customer flange size: ANSI 4"/150 lbs including gasket	**A5E01009883**	
SITRANS SL, gasket for ANSI 4"/150 lbs	**A5E02789535**	
SITRANS SL, purging tube 340 mm incl. gasket for DN 50/PN 10 ... 40	**A5E01009892**	

Additional units and spare parts	Article No.	Item No. (see graphic below)
SITRANS SL, window cover for detector unit	**A5E01009897**	
SITRANS SL, cover for transmitter unit	**A5E02568437**	
SITRANS SL, connecting cable for analog and Modbus (ATEX), cable gland of nickel-plated brass, for devices delivered after October 2009 (Version 1.1)	**A5E02608597**	**6**
SITRANS SL, connecting cable for analog and Modbus (ATEX), cable gland of stainless steel	**A5E34834297**	**6**
SITRANS SL, connecting cable for PROFIBUS DP (ATEX), cable gland of nickel-plated brass	**A5E02608594**	**6**
SITRANS SL, cable for transmitter (ATEX), cable gland of nickel-plated brass	**A5E44678580**	**2**
SITRANS SL, cable for detector (ATEX), cable gland of nickel-plated brass	**A5E44678567**	**4**
SITRANS SL, connecting cable for PROFIBUS DP (ATEX), cable gland of stainless steel	**A5E34834296**	**6**
SITRANS SL, connecting cable for transmitter (ATEX), cable gland of stainless steel	**A5E34830928**	**2**
SITRANS SL, connecting cable for detector (ATEX), cable gland of stainless steel	**A5E34831050**	**4**
SITRANS SL, terminal box and connecting cable for transmitter (ATEX), cable gland of stainless steel	**A5E34831075**	**1**
SITRANS SL, terminal box (ATEX), cable gland brass, nickel-plated	**A5E02091532**	**1**
SITRANS SL, terminal box and connecting cable for transmitter (ATEX), cable gland of nickel-plated brass	**A5E02568463**	**1+2**
SITRANS SL, sensor connecting cable 5 m	**A5E02571180**	**5**
SITRANS SL, sensor connecting cable 10 m	**A5E02571184**	**5**
SITRANS SL, sensor connecting cable 25 m	**A5E02571186**	**5**
SITRANS SL, terminal box and connecting cable for detector (ATEX), cable gland of stainless steel	**A5E34831078**	**3**
SITRANS SL, terminal box and connecting cable for detector (ATEX), cable gland of nickel-plated brass	**A5E02568465**	**3+4**
SITRANS SL, cable gland for non-Ex cables	**A5E02568457**	
SITRANS SL, union nut	**A5E01010033**	
SITRANS SL, printed circuit board for detector with LUI (Version 1.1)	**A5E31503119**	
SITRANS SL, remote control IS, CSA, FM, ATEX certifications	**A5E02091214**	
SITRANS SL, assembly kit for needle valve	**A5E02569944**	
SITRANS SL, assembly kit restrictor for sensor purging	**A5E02183375**	
SITRANS SL, flashlight with adapter	**A5E33259745**	

Other accessories

You can find more accessories and spare parts in our PIA Life Cycle Portal product selector: www.pia-portal.automation.siemens.com

© Siemens AG 2024

Selection and ordering data (continued)

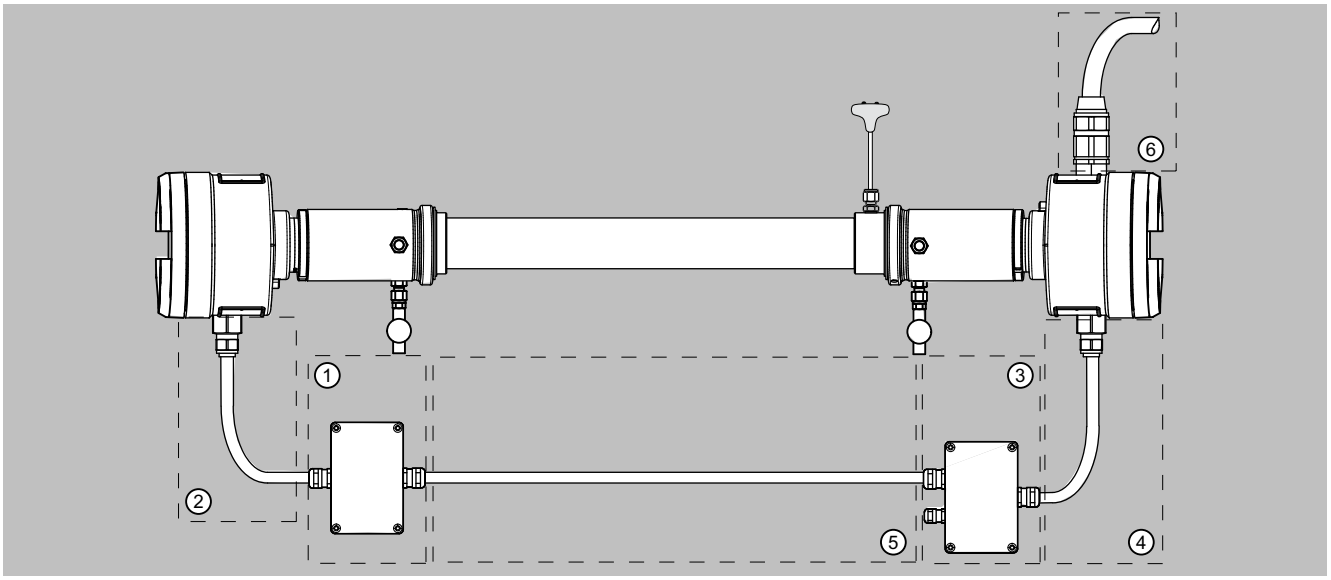

SITRANS SL replacement parts, item numbers

© Siemens AG 2024

Accessories

SITRANS SL sensor alignment kit

The SITRANS SL sensor alignment kit includes a battery-operated lamp, a centering aid with cross-hairs and two hook spanners for loosening the sensors from the flange connection plates.

Please note:
The SITRANS SL sensor alignment kit is not explosion-protected! Therefore it must never be used in a hazardous area without approval by the plant operator!

Calibration verification kit

The SITRANS SL has already been factory-calibrated. If it is desirable or necessary to check the calibration, this can be performed using an external calibration test kit following removal of the transmitter and detector units. This procedure has no influence on the optical adjustment of the device since the flange connection plates remain mounted on the customer flange. The calibration verification kit for O_2 consists of a stainless steel calibration tube and a thermometer. To carry out the calibration, it is mounted between the transmitter and detector. The calibration tube for O_2 can then be filled with air or a calibration gas.

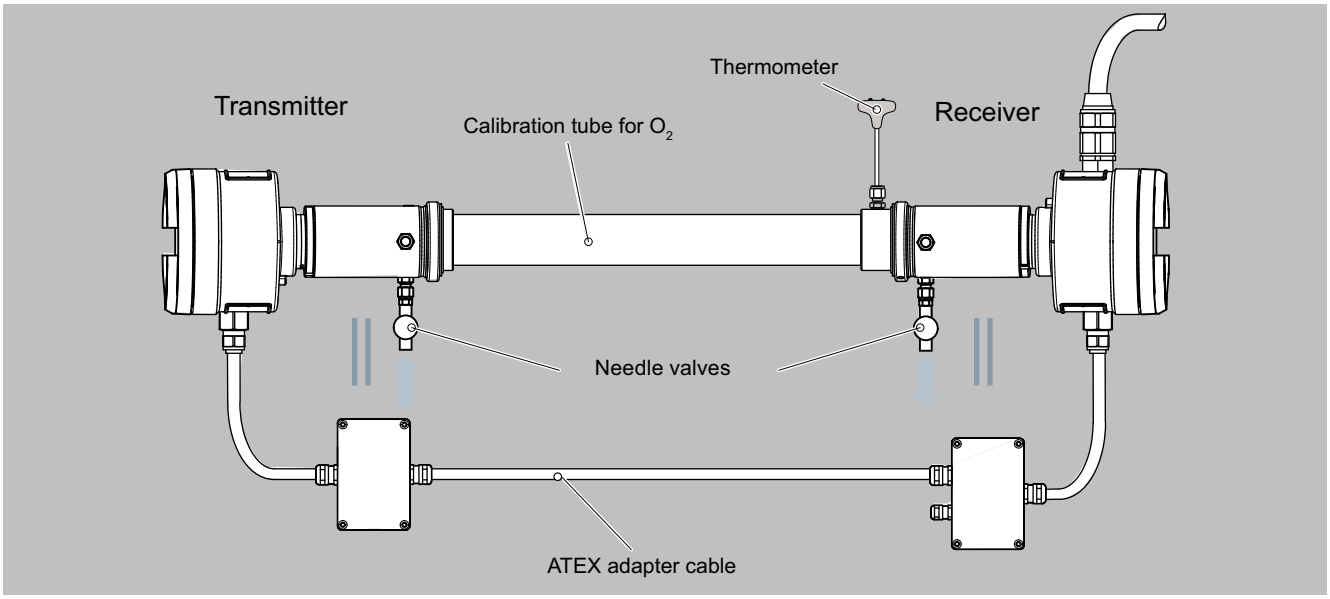

Calibration validation setup of SITRANS SL O_2

Other accessories

You can find more accessories and spare parts in our PIA Life Cycle Portal product selector: www.pia-portal.automation.siemens.com

© Siemens AG 2024

Technical specifications

In situ O2 gas analyzer	
Analytical performance	
Measuring range	Internally adjustable
Detection limit at standardized conditions: 25 °C gas temperature, 1 000 hPa, 1 m effective optical path length, 3 s integration time and constant ambient conditions.	O_2: 200 ppmv
Linearity (under standard conditions)	Better than 1%
Repeatability (under standard conditions)	O_2: 2% of measured value or DL (whichever is greater)
General information	
Design	Transmitter and detector units, connected by a sensor cable
Materials	• Sensor enclosure: Treated aluminum/stainless steel (1.4305/303) • Process interface: Acid-resistant stainless steel (1.4404/316L) • Window: hardened borosilicate glass • Compressible gaskets: FKM, FF, EPDM (holder for reference cell) • Flat gaskets: Graphite
Parts in contact with the process gas	• Purging tubes, flanges, window ring, process purging: Acid-resistant stainless steel (1.4404/316L) • Window: hardened borosilicate glass • Gasket in window: FFKM • Flat gasket between customer flange and process flange: Graphite
Installation	In situ or bypass
Concentration units	ppm, vol%, mg/Nm³
Display	Digital concentration display (4 digits with floating decimal point)
Laser protection class	Class 1, safe to the eye
Explosion protection	Optionally, according to • ATEX II 2G Ex db e op is IIC T6 Gb ATEX II 2D Ex tb IIIC T85 °C Db • FM USA: Class I, Division 1, Groups A, B, C, D; T6 Ta = 55°C Class II/III, Division 1, Groups E, F, G, T6 Ta = 55°C Class I, Zone 1, AEx db IIC T6 Gb Ta = 55°C Zone 21, AEx tb IIIC T85°C Db Ta = 55° • FM Canada: Class I, Division 1, Groups C, D; T6 Ta = 55°C Class II/III, Division 1, Groups E, F, G, T6 Ta = 55°C Class I, Zone 1 Ex db IIC T6 Gb Ta = 55°C Zone 21, Ex tb IIIC T85°C Db Ta = 55°C • NEPSI Ex: Ex d e op is IIC T6 Gb Ex tD A21 IP65 T85°C • TIIS Japan: Ex db II C T6 Gb
Design, enclosure	
Degree of protection	IP65 according to EN 60529
Dimensions	For each unit (transmitter, detector) • Diameter: 165 mm • Length: 357 mm
Purging tube	• Length: 340 mm • Outer diameter: 48 mm • Inside diameter: 44 mm
Weights	
• Detector unit	6.0 kg
• Transmitter unit	5.2 kg
• Process interface	
- for DN50/PN25	5.3 kg
- for ANSI4"/150 lbs	Approx. 12 kg
Connection dimension customer flange	DN 50/PN 25, DN 50/PN 40 or ANSI 4"/150 lbs

Technical specifications (continued)

In situ O2 gas analyzer	
Electrical characteristics	
Auxiliary power	24 V DC nominal (18 ... 30.2 V DC)
Power consumption, maximum	10 VA
EMC	In accordance with EN 61326-1
Electrical safety	In accordance with EN 61010-1
Fuse specifications	T1.6L250V
Dynamic performance	
Warm-up time at 20 °C ambient temperature	Approx. 15 min
Response time (T90)	Approx. 2 s, depends on application
Integration time	0 ... 100 s, selectable
Influencing variables	
Variations in ambient temperature	< 0.5%/10 K of the measuring range
Process gas temperature	With compensation: < 1%/100 K of the measuring range
Variations in atmospheric pressure	Negligible
Process gas pressure	O_2: With compensation: < 1%/4 000 hPa of the measuring range
Variations in supply voltage	Negligible
Electrical inputs and outputs	
Number of measurement channels	1
Analog outputs	2 outputs, 4 ... 20 mA, floating, ohmic resistance max. 660 Ω. External isolating power supplies may have to be provided by the customer.
Analog inputs	2 inputs, designed for 4 ... 20 mA, 120 Ω
Digital outputs	2 outputs, with changeover contacts, configurable, 24 V/0.5 A, floating, single-pole single throw (SPST)
Digital input	1 input, designed for 24 V, floating, configurable
Service port	Ethernet 10BaseT (RJ45)
RS 485 PROFIBUS DPV0 version	Two-wire interface, up to 3 Mbps, -7 ... 12 V
RS 485 Modbus version	Two-wire interface, up to 115 200 bps, -7 ... 12 V
Connecting cable to customer interface	Not included in standard delivery, permanently installed for ATEX or optional for standard
Analog connecting cable (only supplied cables may be used for ATEX configuration!)	10 x 2, with shielding in twisted-pair configuration (depending on type and number of I/Os used)
PROFIBUS DP connecting cable (only supplied cables may be used for ATEX configuration!)	1 × 2 + 4 (PROFIBUS DP hybrid cable)
Modbus connecting cable (only supplied cables may be used for ATEX configuration!)	1 × 2 + 3, with shielding in twisted-pair configuration
Cable length for ATEX configuration	3 m
Cable cross-section	Min. 0.34 mm²
Cable diameter	8 ... 12 mm or 13 ... 18 mm
Minimum bending radius ATEX-PROFIBUS	110 mm
Sensor cable	Not included in standard delivery, permanently installed for ATEX or optional for standard
Sensor cable type configuration	4 × 2, with shielding in twisted-pair configuration
Cable cross-section	Min. 0.34 mm²
Cable jacket	PUR (polyurethane)
Dimensions	• Diameter: 11 mm • Length: up to 25 m
Minimum bending radius	ATEX: 85 mm

© Siemens AG 2024

Technical specifications (continued)

In situ O2 gas analyzer	
Climatic conditions	
Ambient temperature range	**Note** The display on the detector side must not be exposed to direct solar radiation. • -20 ... +55 °C during operation (additional solar radiation not permissible!) • -40 ... +70 °C during transport and storage
Temperature range on the sensor side of the process interface (connection plate)	-20 ... +70 °C
Atmospheric pressure	800 ... 1100 hPa (for ATEX- and FM version)
Humidity	< 100% rel. humidity
Measuring conditions	
Measurement path	0.3 ... 8 m (other lengths: please contact Siemens)
Process gas pressure, temperature	• O_2: 900 ... 1 100 hPa, 0 ... 600 °C • O_2: 700 ... 5 000 hPa, 0 ... 200 °C
Dust load	The influence of a high dust load is complex, and depends on the optical path length and particle size distribution.
Purging	
Purging gas	Nitrogen (for O_2 applications)
• Quality	O_2 application: Purity better than 99.7% in order to achieve full performance. For oxygen measurements, an O_2 content < 0.01 vol% in the purging gas is recommended.
• Dew point	< -10 °C, condensation on the optics must be avoided
Sensor purging	
• Max. overpressure in the sensor	500 hPa
• Purging gas temperature on sensor side	0 ... +55 °C
• Flow	O_2 application: When commissioning a sensor enclosure previously filled with air: 3 ... 5 l/min (for at least 15 min), subsequently: at least 0.25 l/min
Purging on the process side (optional)	
• Pressure at purging gas inlet	2 000 ... 8 000 hPa
• Flow	Dependent on process gas pressure, process gas velocity, dust load, moisture, etc. up to max. 50 l/min

© Siemens AG 2024

Dimensional drawings

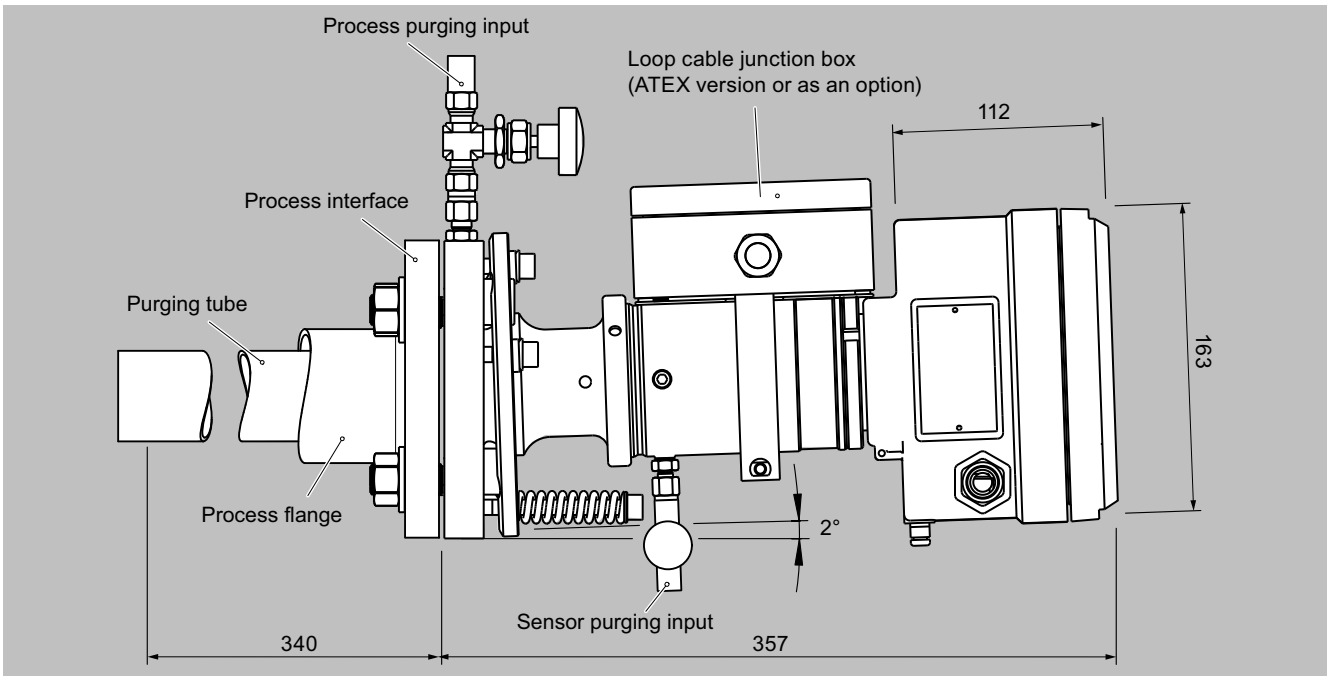

SITRANS SL, transmitter/detector unit (same enclosure for DN50/PN25 process interface version), dimensions in mm

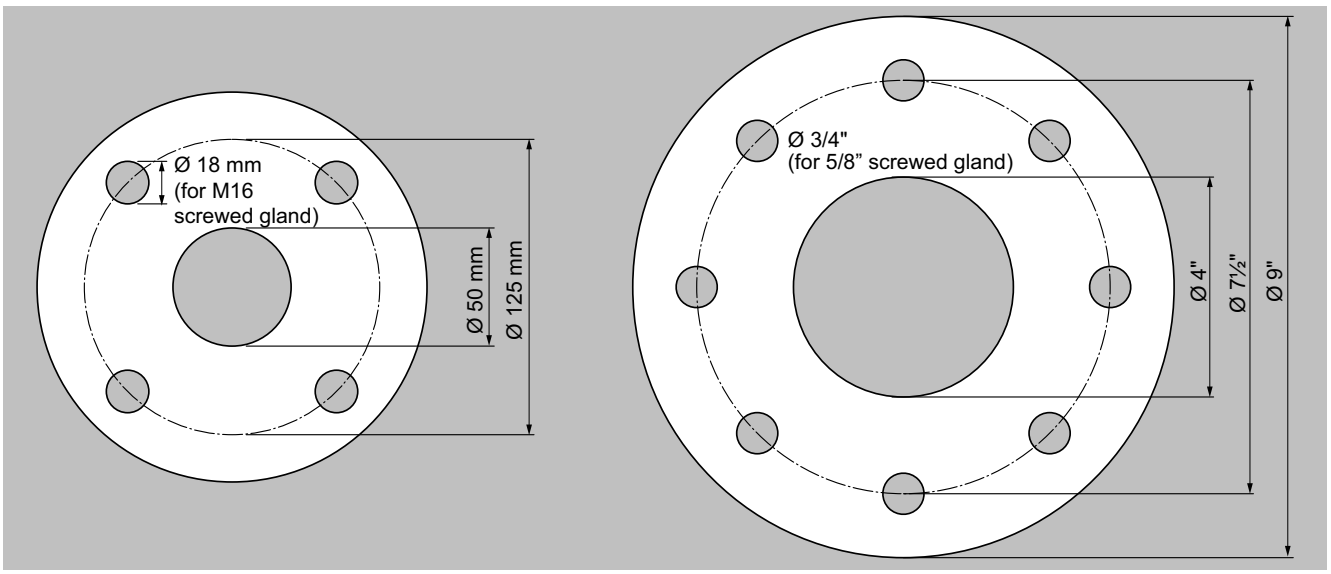

Connection dimensions of process flanges provided by customer DN50/PN25 and ANSI 4"/150 lbs

Note

The SITRANS SL sensors must be accessible from the side. A space of at least 60 cm must be provided next to the SITRANS SL transmitter and detector units in order to facilitate maintenance and servicing.

To fulfill the safety requirements, a clearance of at least 10 cm must be provided around the SITRANS SL to maintain cooling.

© Siemens AG 2024

Circuit diagrams

Electrical connections

Non-Ex version connection cable - customer interface

Terminal block in the receiver enclosure			Function/voltage	Ethernet cable
1	+		Power supply 19 ... 30.2 V, 10 VA[1)]	
2	-			
3	Normally closed under power[4)]		Digital output 0 (relay) 30 V, 0.5 A[3)]	
4				
5	Normally closed under power[4)]		Digital output 1 (relay) 30 V, 0.5 A[3)]	
6				
7	+		Digital input 0 0 ... 30 V[2)]	
8	-			
9	+		Analog output 0 (measurement) 30 V, 24 mA[3)]	
10	-			
11	+		Analog output 1 (measurement) 30 V, 24 mA[3)]	
12	-			
13	PROFIBUS A line (RxD/TxD_N - data inverted)	Modbus D1 (RxD/TxD_N - data inverted)	RS 485 (PROFIBUS / Modbus) -7 ... +12 V DC	
14	PROFIBUS B line (RxD/TxD_P - data not inverted)	Modbus D0 (RxD/TxD_P - data not inverted)		
15	PROFIBUS/Modbus shield			
16	T_x+		Ethernet[5)]	White/orange
17	T_x-			Orange
18	R_x+			White/green
19	R_x-			Green
20	+		Analog input 0 (temperature) 0 ... 30 mA[2)], 120 Ω	
21	-			
22	+		Analog input 1 (pressure) 0 ... 30 mA[2)], 120 Ω	
23	-			
24			Grounding	
25			Grounding	
Mass			Grounding	
Mass			Grounding	Shielding

1) Maximum power consumption of SITRANS SL.
2) Maximum input values.
3) Maximum output values.
4) Note: "Normal operation" stands for normal operation of the analyzer. The system is connected to the voltage source and is running without problems; no error message generated or displayed. "Normally under power" refers to the status of the relay under the above-named normal operation. The relay contact of the alarm signal is closed.
5) We recommend that the Ethernet connection is not made via the connecting cable to the Ethernet terminals in the detector unit. Instead, the Ethernet connection should be made via the sensor cable connection set which is optionally available for the detector side.

Examples of digital output and analog output

Caution

Please note that an external isolating power supply may be required!

© Siemens AG 2024

Circuit diagrams (continued)

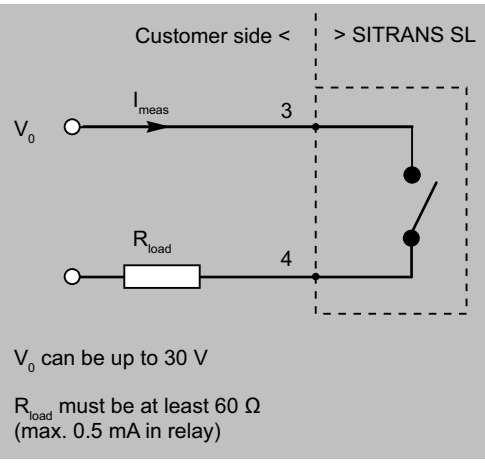

Example of digital output 0

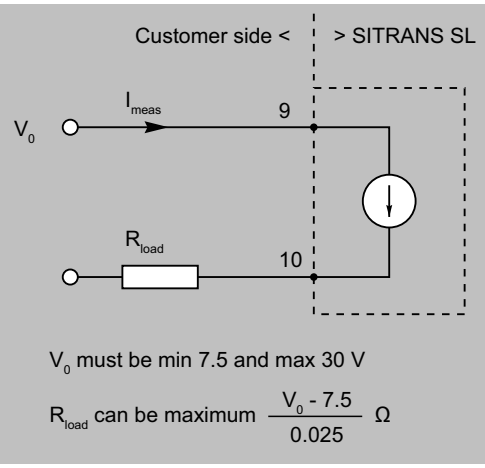

Example of analog output 0

Sensor cable junction box on the detector side (ATEX version)

Terminal strip in junction box		Function	Color code
1	+	24 V DC power supply for transmitter unit	Red
2	-		Blue
3	Com +	Communication with transmitter	Pink
4	Com -		Gray
5	Sync +	Synchronization with transmitter	White
6	Sync -		Brown
7	NC	Not used	-
8	Tx+	Ethernet	Gray/pink
9	Tx-		Red/blue
10	Rx+		Black
11	Rx-		Violet
PE terminal	-	Grounding	Green
PE terminal		Grounding	Yellow
Gland		Grounding	Shielding

© Siemens AG 2024

Overview

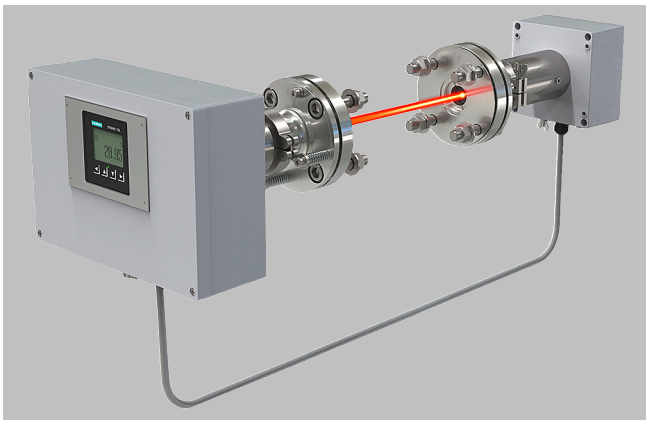

The SITRANS TDL is an in situ gas analyzer and consists of a pair of cross-duct sensor units which are directly installed at the measuring point in the plant. The operating principle of the SITRANS TDL is based on TDLS (Tunable Diode Laser Spectroscopy). This makes the SITRANS TDL the ideal solution for fast and non-contact measurement of gas concentrations. The analyzer can be intuitively monitored and controlled locally via its human machine interface (HMI). In addition, the integrated Ethernet interface allows complete configuration with the help of a standard web browser. A large variety of communications interfaces enables the seamless integration into digital control systems.

The SITRANS TDL gas analyzer can be used to measure the concentration of a wide range of gases, e.g. CO, CO2, CH4, H2, HCHO, HCN, HCl, HF, H2O, H2S, NH3, NO, NO2, O2, SO2, SO3.

Standardized device variants enable simplified selection and ordering for typical applications. In addition, customer-specific device variants are possible.

Application

Applications

- Control of combustion processes

The measurement of the oxygen concentration is possible as standard at temperatures up to 1100 °C. Higher temperatures are possible on request. Even oxygen-containing purging gases can be used.

- Process optimization
- Plant security and safety at the workplace
- Process measurements in all types of power and combustion plants
- Process control
- Explosion protection
- Measurements in corrosive and toxic gases
- Quality control

Sectors

- Chemical and petrochemical plants
- Power plants
- Waste incinerators
- Steel industry
- Semiconductor industry

© Siemens AG 2024

Design

The complete analyzer is integrated into two cross-duct sensor units which are installed on opposite sides of the customer process: The emitter unit enclosure contains a laser diode whose light is transmitted through the measurement path to the detector unit. There it can be detected using a photodetector. The detector unit enclosure is connected to the emitter unit by means of a sensor cable. The emitter unit enclosure contains a human machine interface (HMI) with an LC display and pushbuttons. In addition to the HMI, the SITRANS TDL can be monitored and configured via an Ethernet connection and a standard web browser.

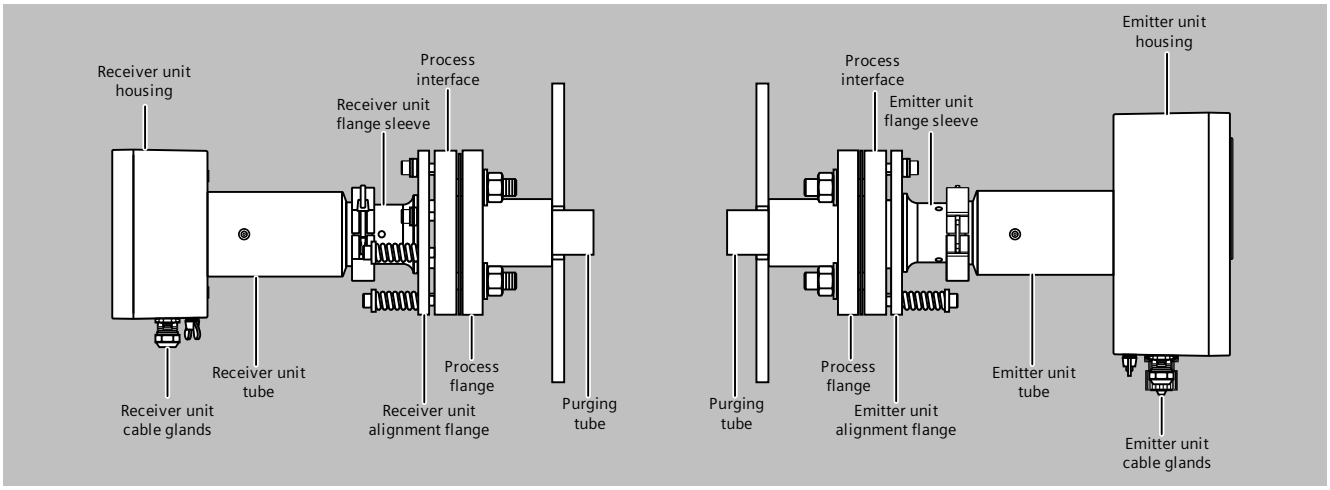

Emitter and detector unit enclosures

- Powder-coated aluminum; stainless steel
- Degree of protection: IP66
- Adjustable process connection plates
- Supported flange sizes (provided by customer): DN50/PN16, DN65/PN6, ANSI 2"/150 lbs
- Purging gas connections (see "Purging")

Display and operating interfaces

HMI in emitter unit enclosure:

- Display for simultaneous output of measurement result and device status
- LED backlighting of display
- Menu-driven operation for parameterization and diagnostics

Web interface:

- Monitoring of parameters
- Complete configuration of the analyzer
- Available via Ethernet connection
- Access to device via standard web browser, no proprietary software required

SIMATIC PDM:

- Access to maintenance and servicing information

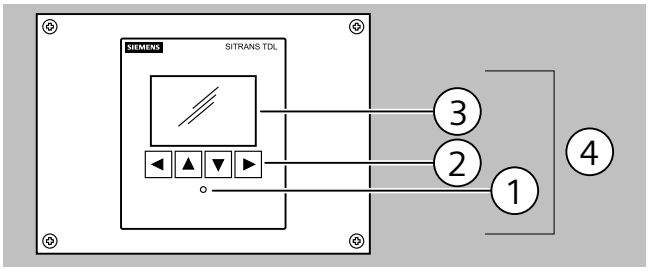

SITRANS TDL, display and operating interfaces

1	LED light
2	Local buttons
3	Graphical display
4	Local operation (HMI)

© Siemens AG 2024

Design (continued)

Available views on HMI

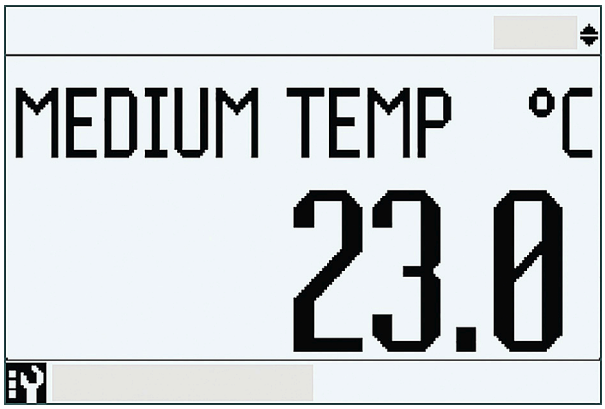

View on HMI of the SITRANS TDL (1 value)

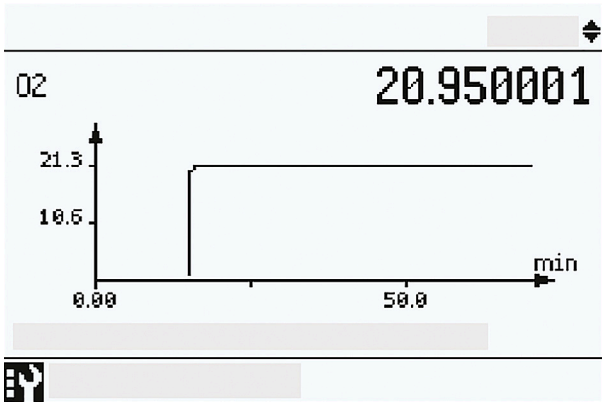

View on HMI of the SITRANS TDL (1 value and diagram)

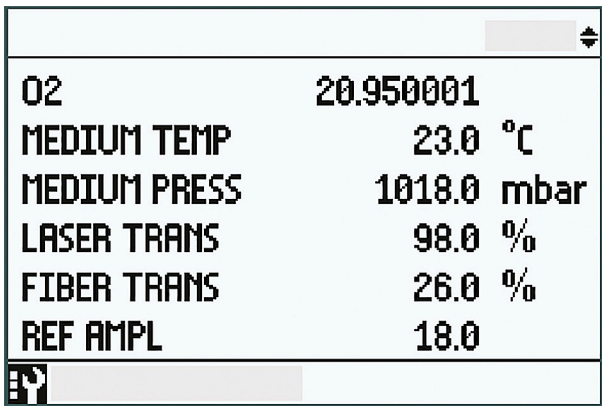

View on HMI of the SITRANS TDL (6 values)

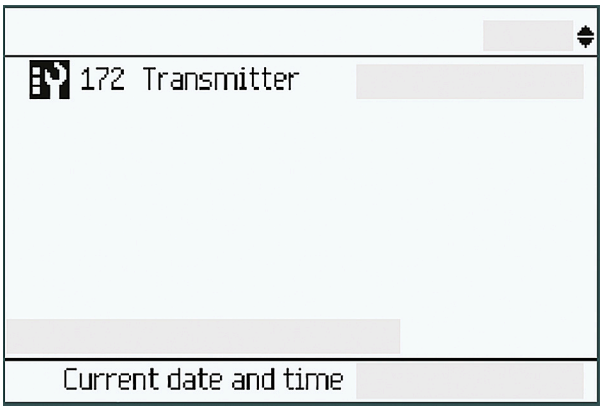

View on HMI of the SITRANS TDL (alarm view)

Connection cables

The sensor cable connects the enclosures of the emitter and detector unit. It is offered in standard lengths of 5, 10, 25 or 50 m and in custom lengths. Further terminal and connection cables are available as accessories. This includes cables for power supply, permanent Ethernet connection and industrial communications interfaces.

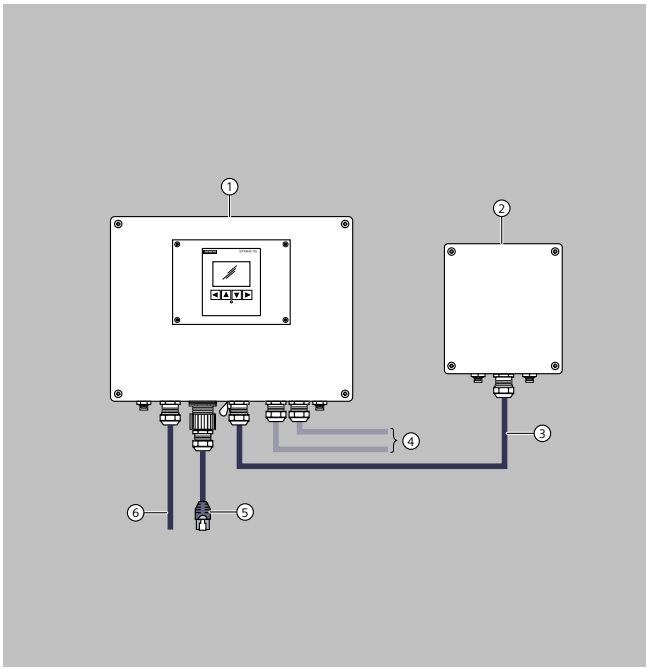

SITRANS TDL, connection cables

1	Emitter unit with transmitter
2	Detector unit
3	Sensor cable
4	Cables for industrial protocols provided by customer
5	Ethernet cable
6	Customer cable

Inputs/outputs

Standard interfaces:

© Siemens AG 2024

Design (continued)

- 4 configurable analog inputs (4 to 20 mA, active and passive mode)
- 4 configurable analog outputs (4 to 20 mA, active and passive mode, isolated)
- 4 configurable digital outputs (isolated)
- 1 Ethernet interface

Optional interfaces:

- Modbus RTU interface
- Modbus TCP interface
- Profibus DP interface

Function

Operating principle

The operating principle of the SITRANS TDL is based on tunable diode laser spectroscopy (TDLS). The wavelength of the laser light is selected such that it matches a specific absorption line of the gas species of interest. This absorption line is scanned by the SITRANS TDL with very high spectral resolution. The degree of absorption and the line shape are used for the determination of the gas concentration. The gas concentration determination takes the measurement path length between both cross-duct sensors into account which is typically measured once during installation of the analyzer.

Lifetime calibration

It is key to ensure a reliable analyzer performance over long periods, even under changing ambient conditions. Therefore, the SITRANS TDL measures a reference gas spectrum in addition to the gas species of interest and automatically stabilizes its laser wavelength. Additionally, internal self-calibration procedures continuously monitor the analyzer performance. Thanks to these measures, the SITRANS TDL is designed to be lifetime calibrated. Nevertheless, we recommend a validation of the analyzer every 2 years with the optional offline validation sets.

Purging

The easiest way to avoid condensation and dust deposits on the sensor windows or excessively high thermal stress of the analyzer components is to purge the SITRANS TDL with a purging gas. Purging gas types and purging modes must be selected depending on the measurement application. For selected oxygen measuring applications, even purging with oxygen-containing purging gases is possible. The application reference table provides recommendations for suitable purging gases and lists the achievable detection limits. The cross-duct sensors can therefore be configured for the respective situation. Different connector types are available for the purging gas connectors: Clamping ring connections (6 mm and ¼"), plug-in connectors (6 mm and ¼") and ¾" connector for process purging with air blowers.

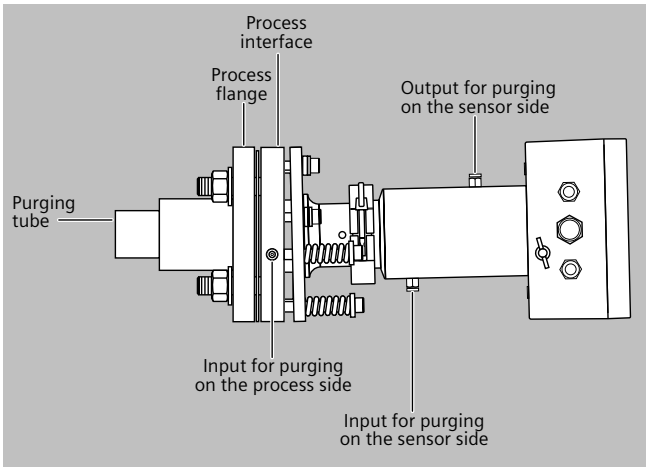

Purging on the process side

For purging on the process side, the purging gas flow must be adjusted between 5 and approx. 50 l/min at each sensor head using a needle valve (not included). The purging gas is injected into the process interface and enters the process via the purging tube (optional).

Purging on sensor side

On both sensor enclosures, dedicated inlet and outlet ports are available for the sensor purging gas. The sensor purging gas flow must be adjusted between 0.2 and 7 l/min. Particularly when (re)starting the SITRANS TDL, a sufficiently high flow of sensor purging gas must be provided for several minutes to ensure that residues of oxygen are removed (not required in case of air purging). The flow of sensor purging gas can subsequently be set to a lower value using a needle valve.

Note

No process gas may flow back into the purging gas line!

With purging on the process side, it may be necessary to use non-return valves to ensure no process gas can enter the purging gas line in the event of failure of the purging gas supply. This applies especially in the case of cascaded sensor and process purging where there is otherwise a danger that corrosive process gases could enter the sensor enclosure. In case of the installation of the SITRANS TDL in hazardous areas, the process purging must be implemented in compliance with the safety concept of the plant.

Purging tubes

The purging gas used on the process side flows through purging tubes into the process gas stream. The pipes extend into the process area by a few centimeters, usually perpendicular to the process gas stream. This means that an exactly defined optical path length is defined through the sample gas. The effective measuring path in the process gas is therefore defined as the distance between the ends of the two purging tubes. Purging tubes are offered in two lengths (400 mm and 800 mm) and two materials (1.4404/316L stainless steel and 2.4602/Hastelloy® C-22).

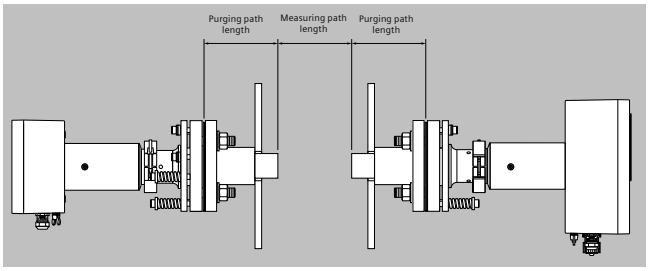

Influences on the measurement

Temperature

The influence of the process gas temperature on the absorption line is compensated by the SITRANS TDL. A temperature signal can be fed into the device from an external temperature sensor or the

© Siemens AG 2024

Function (continued)

DCS of the plant. The SITRANS TDL supports Pt100 and Pt1000 temperature sensors natively and accepts signals via 4-20 mA analog input and via digital communication protocols (optional). The temperature signal is then used for mathematical correction of the influence of the temperature on the absorption signal. If the process gas temperature remains constant, a static correction can be carried out as an alternative, although in most cases the use of an external temperature signal is recommended.

Pressure

In addition to the temperature signal, an external pressure signal can be fed to the device to provide complete mathematical compensation for the pressure influence including the density effect. An external pressure signal is recommended in most cases.

Effective optical path length

As a result of Beer-Lambert's law, the absorption of laser light depends on the optical path length within the sample gas. Therefore, the precision of the effective optical path length measurement can influence the precision of the total measurement. Since the sensor optics on the process side are normally purged to keep them clean for a longer period, the expansion of the mixed zone between the purging medium and the process gas as well as the latter's concentration distribution must be considered. In a typical in situ installation with an optical path length of several meters, the influence of the purging gas on the effective path length can be ignored. The maximum possible path length and dust load mutually affect each other: the higher the dust load in the process, the shorter the max. possible path length.

Dust load

As long as the laser beam is able to generate a suitable detector signal, the dust load in the process gas does not influence the analytical result. By applying a dynamic background correction, measurements can be carried out without any negative effects even when the dust load fluctuates. The influence of a high dust load is complex, and depends on the optical path length and particle size. The optical damping increases exponentially at longer path lengths. Smaller particles also have a very large influence on the optical damping. With high dust load, long path length and small particle size, the technical support at Siemens should be consulted.

Adjustment of the sensor enclosures

Both emitter and receiver housings must be aligned such that the laser beam generated by the emitter unit reaches the detector in the detector unit. The alignment flanges of the process interfaces allow both sensor units to be tilted in horizontal and vertical direction. The alignment of both sensor units can be checked by monitoring the transmission parameters on the local HMI and on the website. A dedicated alignment kit is available as accessory part to simplify the alignment procedure.

Configuration

A feature of the in situ analytical procedure is that the physical measurement takes place directly in the process gas stream and directly in the actual process gas line. All process parameters such as gas matrix, pressure, temperature, moisture, dust load, flow velocity and mounting orientation can influence the measuring properties of the SITRANS TDL and must therefore be investigated for each new application.

The listed TDL standard applications are distinguished in that the typical process conditions are adequately well-known and documented. If you cannot find your application among the standard applications, please contact Siemens. We will be pleased to check your possible individual application of the SITRANS TDL. You can find an application questionnaire on the SITRANS TDL product page on the internet:

http://www.siemens.com/insituquestionnaire

Measurement conditions for standard applications

The following table lists the measuring conditions for standard applications. The listed values for the measuring range and detection limit (DL) are only approximate values. The exact values at the respective measuring point depend on the totality of all influencing parameters and can be determined by Siemens for the specific case. Note that the values for the detection limit and the maximum measuring range are based on a path length of 1 m. Longer path lengths will improve the detection limit, but typically not linearly. This is due to potentially restrictive effects such as dust load. The maximum applicable measuring ranges can only be used if permitted by the process conditions (e.g. dust load).

Standard application			Process gas temperature T_{min} ... T_{max}	Process gas pressure p_{min} ... p_{max}	Path length L_{min} ... L_{max}	Max. measuring range	Detection limit x path length
Gas 1	Gas Code	Appl. code				Gas 1	Gas 1
O_2	B	B	500 ... 1100 °C	700 ... 1500 hPa	0 ... 30 m	0 ... 25%	700 ppmv*m with N2 purge at 800 °C, 5000 ppmv*m with instrument air purge at 800 °C
O_2	B	C	500 ... 1100 °C	950 ... 1050 hPa	0 ... 30 m	0 ... 100%	450 ppmv*m with instrument air or N2 purge at 800 °C

© Siemens AG 2024

Selection and ordering data

SITRANS TDL	Article No. 7MB6431-	●	●	●	●	●	-	●	●	●	●
Click on the Article No. for online configuration in the PIA Life Cycle Portal.											
Unavailable combinations are shown in PIA Life Cycle Portal as "not permitted".											
Type of Ex protection											
without Ex protection / for use in non-hazardous areas only		0									
Appl. code											
Oxygen (O_2); 500-1100 °C; 700 - 1500 hPa abs.; 0-25%, 0-30 meters, 700 ppm*m at 800 °C with nitrogen purge/5000 ppm*m at 800 °C with air purge			B	B							
Oxygen (O_2); 500-1100 °C; 950 - 1050 mPa abs.; 0-100%, 0-30 meters, 450 ppm*m, with air or nitrogen purge at 800 °C			B	C							
Oxygen (high temperature) (O2): customer-specific application			B	Y							
Oxygen O2: customer-specific application			A	Y							
Ammonia (NH3): customer-specific application			C	Y							
Ammonia and water (NH3, H2O): customer-specific application			D	Y							
Hydrogen chloride (HCl); customized request			E	Y							
Hydrogen chloride (HCl): customer-specific application			F	Y							
Hydrogen (H2): customer-specific application			H	Y							
Carbon monoxide (CO): customer-specific application			J	Y							
Carbon monoxide and methane (CO, CH4): customer-specific application			K	Y							
Carbon dioxide (CO2): customer-specific application			L	Y							
Water (H2O): customer-specific application			M	Y							
Trace humidity (H2O): customer-specific application			N	Y							
Hydrogen fluoride (HF): customer-specific application			P	Y							
Hydrogen fluoride and water (HF, H2O): customer-specific application			Q	Y							
Customer-specific measurement components			Z	Y							
Purging tube (clamp on like SITRANS SL)											
without purging tube					0						
400 mm made of stainless steel (1.4404/316L)					1						
800 mm made of stainless steel (1.4404/316L)					2						
400 mm made of Hastelloy (2.4602/Hastelloy C-22)					3						
800 mm made of Hastelloy (2.4602/Hastelloy C-22)					4						
Customized request					9						
Process connection											
without process connection (just for retrofitting)						0					
DN50/PN16 (1.4404/316L), with window, MAWP (PS) at 20 °C: 1.6 Mpa; 3°, with graphite gasket						2					
DN65/PN6 (1.4404/316L), incl. window module, no hermetic sealing, with graphite gasket, "Easy to clean", max. purge pressure 5 bar						4					
ANSI 2"/150 lbs (1.4404/316L), with window, MAWP (PS) at 20 °C: 150 lbs, with graphite gasket						5					
Customized request						9					
Purging mode: Process purging	**Purging mode: Sensor purging**										
Without purging mode with blanking plug / Purging retrofittable	Without purging mode with blanking plug / Purging retrofittable							0			
6 mm clamping ring connection Swagelok fitting (stainless steel 316) for instrument air or nitrogen, 5-50 l/min	6 mm clamping ring connection Swagelok fitting (stainless steel 316) for instrument air or nitrogen, 0.2-7 l/min							1			
1/4" clamping ring connection Swagelok fitting (stainless steel 316) for instrument air or nitrogen, 5-50 l/min	1/4" clamping ring connection Swagelok fitting (stainless steel 316) for instrument air or nitrogen, 0.2-7 l/min							2			
Plug-in connector for 6 mm pipe (stainless steel 316 / PTFE) for instrument air or nitrogen, 5-50 l/min	Plug-in connector for 6 mm pipe (stainless steel 316 / PTFE) for instrument air or nitrogen, 0.2-7 l/min							3			
Plug-in connector for 1/4" pipe (stainless steel 316 / PTFE) for instrument air or nitrogen, 5-50 l/min	Plug-in connector for 1/4" pipe (stainless steel 316 / PTFE) for instrument air or nitrogen, 0.2-7 l/min							4			
3/4" connection for air blower	Without purging mode with blanking plug / Purging retrofittable							5			
3/4" connection for air blower	6 mm clamping ring connection Swagelok fitting (stainless steel 316) for instrument air or nitrogen, 0.2-7 l/min							6			
3/4" connection for air blower	1/4" clamping ring connection Swagelok fitting (stainless steel 316) for instrument air or nitrogen, 0.2-7 l/min							7			
Customized request								9			
Communication											
4 x AO (4-20 mA - active/passive), 4 x AI (4-20 mA - active/passive), 4 x DO									A		
4 x AO (4-20 mA - active/passive), 4 x AI (4-20 mA - active/passive), 4 x DO and Modbus RTU									B		
4 x AO (4-20 mA - active/passive), 4 x AI (4-20 mA - active/passive), 4 x DO and Modbus TCP									C		
4 x AO (4-20 mA - active/passive), 4 x AI (4-20 mA - active/passive), 4 x DO and Profibus DP									E		
4 x AO (4-20 mA - active/passive), 4 x AI (4-20 mA - active/passive), 4 x DO and Modbus RTU and Modbus TCP									F		

© Siemens AG 2024

Selection and ordering data (continued)

SITRANS TDL	Article No. 7MB6431-	●	●	●	●	●	-	●	●	●	●
4 x AO (4-20 mA - active/passive), 4 x AI (4-20 mA - active/passive), 4 x DO and Modbus RTU and Profibus DP									H		
Customized request									Y		
Sensor cable length											
5 m										A	
10 m										B	
25 m										C	
50 m										D	
Customized request										Y	
Cable glands											
Nickel-plated											1
Stainless steel											2
Customized request											9

Options	Order code
Add "-**Z**" to Article No. and then add order code.	
Settings	
Inspection certificate 3.1 (EN 10204) – Material certificate of pressure-containing and wetted parts	**C12**
Inspection certificate 3.1 (EN 10204) – Leak test certificate of pressure-containing and wetted parts	**C15**
Customized measurement component; please clarify with Technical Support and specify in plain text	**Y01**
Customized measuring range; please clarify with Technical Support and specify in plain text	**Y02**
Gas matrix; please clarify with Technical Support and specify in plain text	**Y03**
Temperature range; please clarify with Technical Support and specify in plain text	**Y04**
Pressure range; please clarify with Technical Support and specify in plain text	**Y05**
Tag plate, customized description; please clarify with Technical Support and specify in plain text	**Y15**
Application number: Special calibration; please clarify with Technical Support and specify in plain text	**Y99**
Purging tube: special design; please clarify with Technical Support and specify in plain text	**L1Y**
Process connection: special design; please clarify with Technical Support and specify in plain text	**M1Y**
Purging mode: special design; please clarify with Technical Support and specify in plain text	**N1Y**
Communication: special request; please clarify with Technical Support and specify in plain text	**P1Y**

Options	Order code
Sensor cable length: special design; please clarify with Technical Support and specify in plain text	**Q1Y**
Cable gland: special design; please clarify with Technical Support and specify in plain text	**R1Y**
Price level 1	**R01**
Price level 4	**R04**
Price level 5	**R05**
Price level 6	**R06**
Price level 7	**R07**
Price level 8	**R08**
Price level 9	**R09**
Price level 10	**R10**
Price level 11	**R11**

Accessories	Article No.
Sensor alignment kit	**A5E52636429**
Calibration verification for O_2 (static gas cell, incl. short sensor cable)	**A5E52636430**
Customer cable (voltage, AI, AO, DO), 5 m	**A5E52639213**
Customer cable (voltage, AI, AO, DO), 10 m	**A5E52639220**
Customer cable (voltage, AI, AO, DO), 25 m	**A5E52639229**
Customer cable (voltage, AI, AO, DO), x-m	**A5E52639235**
Ethernet cable and IP66 plug for web server access, 10 meters, with nickel-plated brass cable glands	**A5E52639239**
Process flange alignment kit (requires sensor alignment kit for flange alignment)	**A5E52639245**
Extra long flange adapter (350 mm)	**A5E52639248**
Blower for process purging 115 V / 60 Hz	**A5E52659858**
Blower for process purging 230 V / 50 Hz	**A5E52659869**

© Siemens AG 2024

Technical specifications

SITRANS TDL	
General information	
Design	Emitter and detector units, connected by sensor cable
Material	Sensor enclosures: AlSi12 DIN230
	Process interface: Stainless steel 316L
	Flat gaskets: Graphite
Parts in contact with the process gas	Flanges, window ring, process purging: Acid-resistant stainless steel (316L)
	Window: Sapphire/Quartz
	Gasket in window: FFKM 75 ShA
	Flat gasket between customer flange and process flange: Graphite
	Purging tubes: Stainless steel (1.4404/316L) or Hastelloy (2.4602 / Hastelloy® C-22)
Installation	In situ or bypass
Laser protection class	Class 1 in accordance with EN 60825-1:2014, safe to the eye
Design, enclosure	
Degree of protection	IP66 according to EN 60529
Dimensions	Emitter: • Height: 230 mm • Width: 330 mm • Length: 350 mm Receiver: • Height: 160 mm • Width: 160 mm • Length: 330 mm
Weights	Receiver: 13 kg Emitter: 15 kg Process interface • DN50/PN16: 5.2 kg • DN65/PN6: 6.05 kg • ANSI 2"/150 lbs: 5.2 kg
Climatic conditions	
Ambient temperature	• -20 ... +55 °C (-4 ... 131 °F) during operation (additional solar radiation not permissible) • -40 ... +70 °C (-40 ... 158 °F) during transport and storage
Relative humidity	< 99%, non-condensing
Atmospheric pressure	800 ... 1200 hPa
Purging	
Purging gas	Nitrogen or instrument air (depending on application)
Sensor purging	Max. overpressure in enclosure: 0.5 barg
Electrical characteristics	
Supply voltage	24 V DC nominal (19-30 V DC)
Power consumption, maximum	15 VA in operation, 45 VA during device startup
EMC	In accordance with EN 61326-1
Electrical safety	In accordance with 61010-1
Electrical inputs and outputs	
Analog outputs	4 outputs, 4 ... 20 mA, isolated, passive/active mode user selectable, ohmic resistance min. 50 Ω
Analog inputs	4 inputs, 4 ... 20 mA, isolated, passive mode, 50 Ω
Digital outputs	4 outputs, isolated, 30 V DC, passive mode, 0.5 A max.
Resistance temperature detectors (RTD)	Pt100 and Pt1000 temperature sensors, 2-, 3-, 4-wire connection
Service port	Ethernet (RJ-45) for web server access
RS 485 Profibus DP (optional)	D-subminiature DE-09F
RS 485 Modbus RTU (optional)	Two-wire interface, 9600/19200 bps
Modbus TCP (optional)	Ethernet (2 x RJ-45)

Technical specifications (continued)

SITRANS TDL	
Sensor cable	
Cable type	Optical fiber, PE and 2x0.22 mm² electric wires
Cross-section of electrical wires	2 x 0.5 mm² (30 AWG)
Cable jacket material	Polyurethane (TPE-U)
Dimensions	• Diameter: 8.8 mm • Length: 5 m, 10 m, 25 m, 50 m and custom length
Ethernet cable	
Cable type	UTP CAT 5 (4 twisted pairs)
Cable jacket material	PVC
Length	10 m
Customer cable (optional)	
Wires	Supply voltage, PE, analog IOs, digital IOs (14 x 0.5 mm²)
Length	5 m, 10 m, 25 m, custom length

© Siemens AG 2024

Dimensional drawings

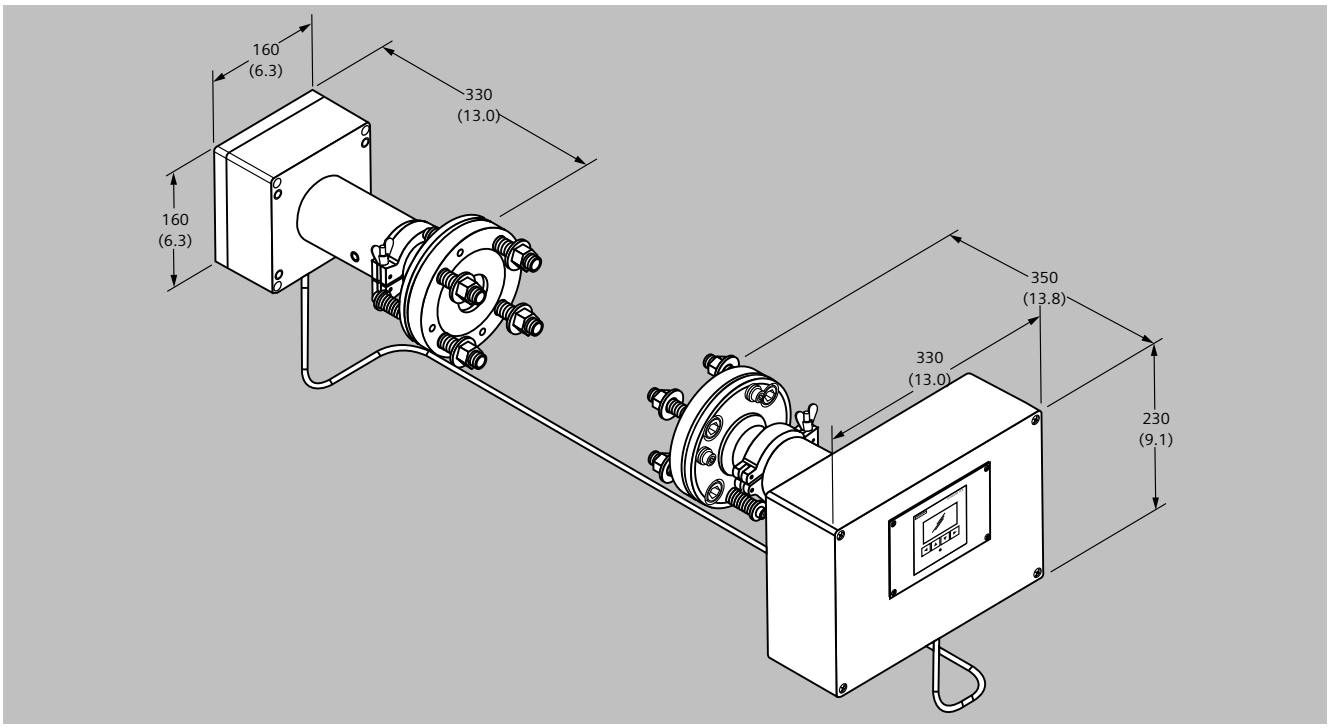

SITRANS TDL, dimensions in mm (inch)

© Siemens AG 2024

Overview

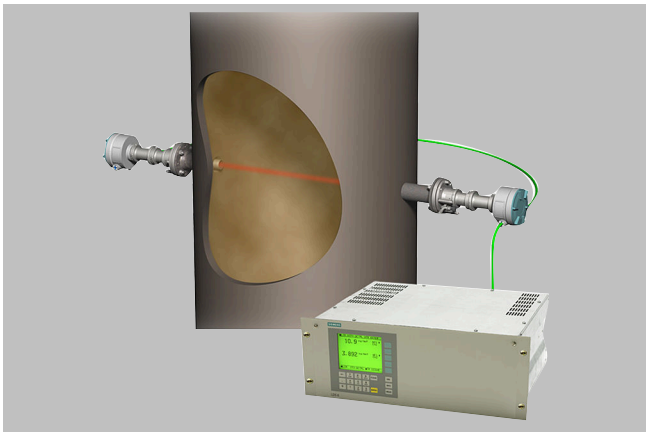

LDS 6, typical installation with central analyzer unit and optics enclosures

LDS 6 is a diode laser gas analyzer with a measuring principle based on the specific light absorption of different gas components. LDS 6 is suitable for fast and non-contact measurement of gas concentrations in process or flue gases. One or two signals from up to three measuring points are processed simultaneously by the central analyzer unit. The in situ optics enclosures at the individual measuring points are connected to the central unit via fiber optic cables, so that the distance between the installation site of the central unit and the measuring points can be up to 700 m. The optics enclosures are designed for operation under harsh environmental conditions and contain a minimum of electrical components.

Benefits

The in situ gas analyzer LDS 6 is characterized by a high availability and unique analytical selectivity. It is optimally suitable for numerous applications. LDS 6 enables the measurement of one or two gas components or - if desired - the gas temperature directly in the process:

- With high dust load
- In hot, humid, corrosive, explosive, or toxic gases
- In applications showing strongly varying gas compositions
- Under harsh ambient conditions at the measuring point
- Highly selective, i.e. mostly without cross-sensitivities

LDS 6 properties:

- Low installation workload
- Minimum maintenance requirements
- Extremely rugged design
- High long-term stability through built-in, maintenance-free reference gas cell, field calibration is unnecessary
- Real-time measurements

Moreover, the device provides warning and error messages in the following situations:

- Maintenance required with
  - Erroneous reference function
  - Bad signal quality
- Violation of a high or low threshold value for the measured variable
- Transmitted amount of light violating a min. or max. value

© Siemens AG 2024

Application

Applications

- Process optimization
- Continuous emission monitoring for all kinds of fuels (oil, gas, coal, and others)
- Process measurements in power utilities and any kind of combustion plant
- Process control
- Explosion protection
- Measurements in corrosive and toxic gases
- Quality control
- Environmental protection
- Plant and operator safety

Sectors

- Power plants
- Steel works
- Cement industry
- Chemical and petrochemical plants
- Automotive industry
- Waste incinerators
- Glass and ceramics production
- Research and development
- Semiconductor and computer chip production

Special applications

In addition to the standard applications, special applications are available on request. These contain both an expansion of the temperature and pressure range, as well as an expansion of the concentration measuring range. Furthermore, other gas species can be measured using special applications.

© Siemens AG 2024

Design

The gas analyzer LDS 6 consists of a central unit and up to three in-situ optics enclosure. The connection between the central unit and the optics enclosures is established by a so-called hybrid cable, which contains fiber-optic cables and copper wires. An additional sensor cable connects the transmitter and receiver parts of the optics enclosure.

Central unit

The central unit is housed in a 19" rack unit housing with 4 fixing points for mounting

- in a hinged frame
- in racks with or without telescopic rails

Display and operator panel

- Large LCD field for simultaneous display of measurement result and device status
- Contrast of the LCD display is adjustable via the menu
- LED backlight of the display with energy-saving function
- Easy-to-clean membrane touch pad with softkeys
- Menu-driven operation for parameterization and diagnostics
- Operation support in plain text

Inputs and outputs

- One to three measurement channels with hybrid cable connections for the optics enclosure at the measuring points
- 2 analog inputs per channel for process gas temperature and pressure
- 2 analog outputs per channel for gas concentration(s). For selected versions, the transmission can be read out as an alternative.
- 6 freely configurable digital inputs per channel for signaling faults or maintenance demanded from external temperature or pressure transducers or insufficient purging of the optics enclosure.
- 6 freely configurable digital outputs per channel (signaling of errors, maintenance required, function control, transmission limit alarm, concentration limit alarm, store analog output)

Communication

Network connection: Ethernet (T-Base-10) for remote diagnostics and maintenance.

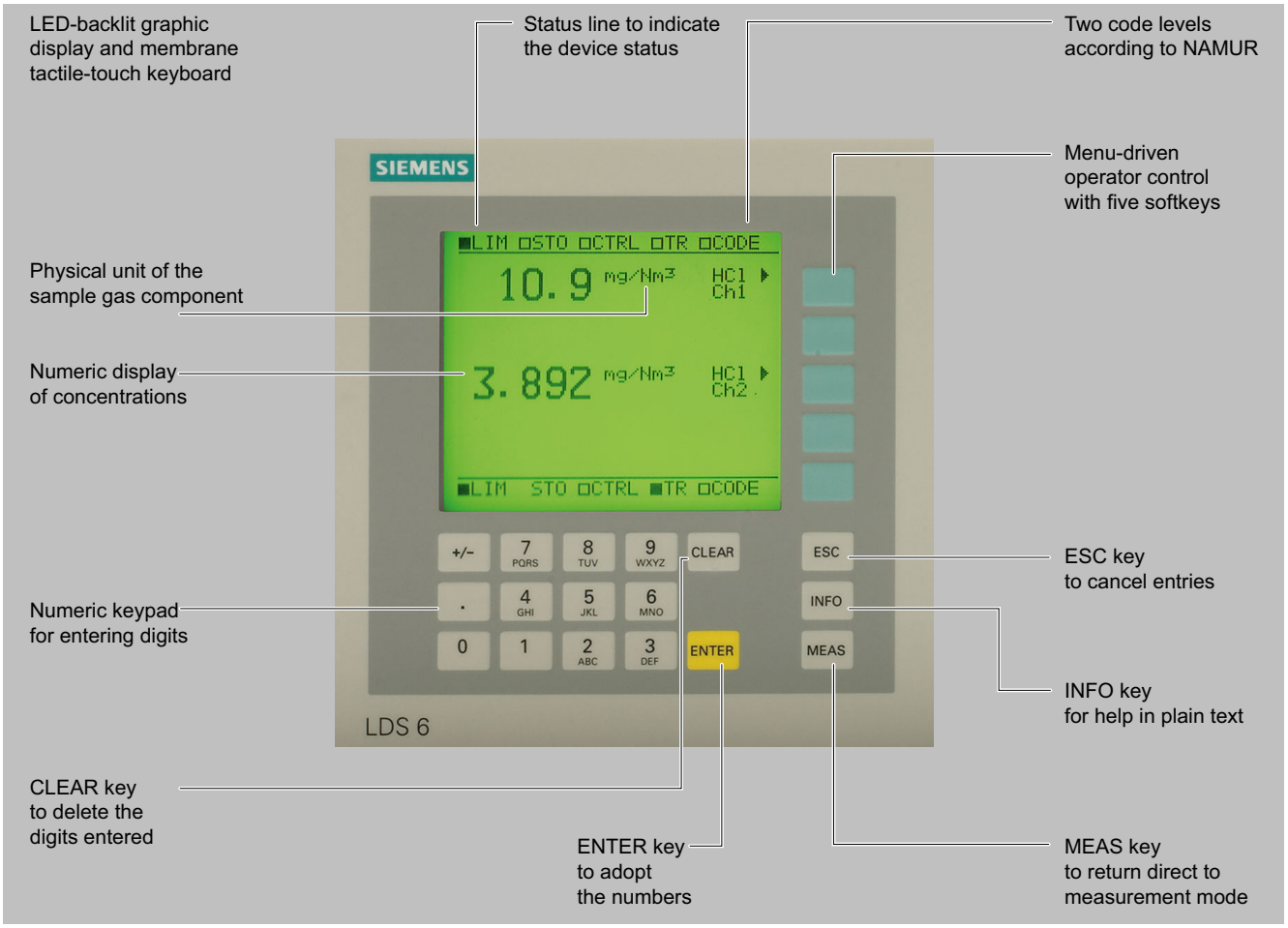

LDS 6 central unit, membrane keyboard and graphic display

© Siemens AG 2024

Design (continued)

Optics enclosure

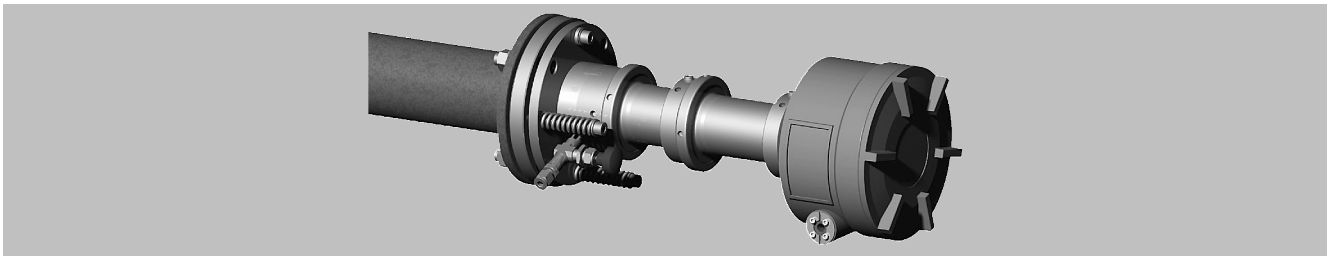

Optics enclosure CD 6, transmitter or detector unit

- In situ optics enclosure, configured as transmitter and detector unit, connected via sensor cable
- Connection to the LDS 6 central unit via a so-called hybrid cable of max. 700 m length (total hybrid and sensor connecting cable length: max. 250 m in hazardous zone 0 and hazardous zone 1)
- Stainless steel, some painted aluminum
- Optics enclosure according to IP65 degree of protection
- Adjustable flanges with flange connection
- DN 65/PN 6, ANSI 4"/150 lbs
- Optional flameproof window flanges with dimensions: DN 65/PN 6, DN 80/PN 16, ANSI 4"/150 lbs, other process interfaces available on request
- Purging facilities on the process and the sensor sides, configurable application with purging gas connections for:
  - Instrument air
  - Purging air blower
  - Steam
  - Nitrogen
  - Process gases to which the pressure equipment directive Cat. 2 does not apply
- In combination with high-pressure window flanges, purging can be performed at the process end with instrument air or nitrogen
- Quick release fasteners for cleaning the measurement openings and the optics enclosure window
- Optional: Version with explosion protection in accordance with ATEX / IEC Ex ia
- Optics enclosure CD 6 is compliant with the pressure equipment directive

Parts in contact with the process gas

The optics enclosure normally does not come into contact with the process gas, since purging with a gaseous media is applied at the process side. Stainless steel or propylene (PP) purging gas tubes in front of the sensor windows are immersed slightly into the process gas and thus limit the purging volume. Special materials such as Hastelloy are available on request.

Hybrid and sensor cables

A combination of fiber-optic cables and twisted copper wires connects the optics enclosure to the central unit. The hybrid cable connects the central unit with the detector unit of the optics enclosure, the sensor cable connects the transmitter and detector unit of the optics enclosure.

For installation in Ex-protected environments, the legislative regulations have to be complied with, such as the spatial separation of intrinsically safe from non-intrinsically safe cables.

In compliance with standard EN IEC 60079-14, systems with intrinsically safe circuits must be installed such that their intrinsic safety is not impaired by electric or magnetic fields. Therefore the hybrid and sensor cables of the LDS 6 in an Ex application must be routed in such a way that they cannot generate electric or magnetic fields, e.g. by coiling them in more than one cable loop. To guarantee a good signal quality and to avoid impermissible inductance loops, the hybrid and sensor cables should be kept as short as possible.

- The distance between central unit and measuring point can be
  - up to 250 m for Ex devices when used in Zone 0 and Zone 1 (total hybrid and sensor connecting cable length)
  - up to 700 m for Ex devices used in Zone 2 and for non-Ex devices
- Hybrid and sensor cables
  - Multimode fiber-optic cable, provided with SMA connections for transmission of the measured signal
  - Two-wire copper cable, in twisted pair version, for (+24 V) power supply of the detector electronics (+12 V in the case of Ex-suitable instruments)
- Additionally for the hybrid cable:
  - Single-mode fiber-optic cable, configured double-sided with E2000 connectors for transmission of laser light
- Rugged cable jacket for laying in open cable ducts or ductworks
- Sheath material: oil-resistant polyurethane

© Siemens AG 2024

Design (continued)

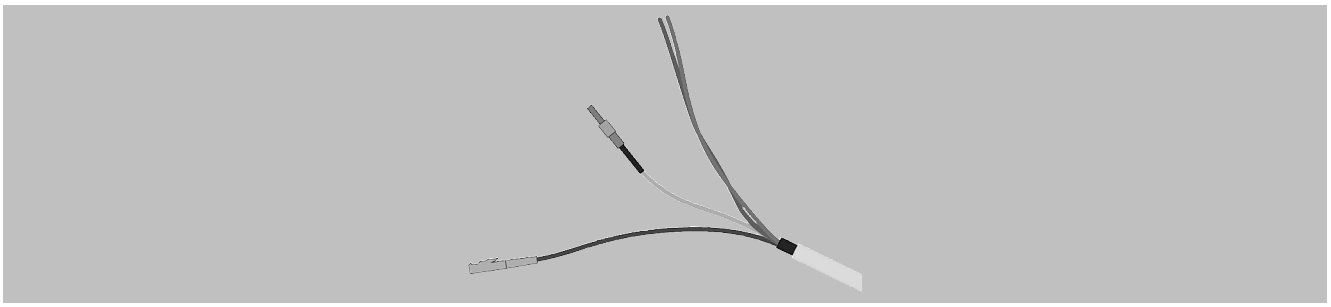

Connections of the hybrid cable

© Siemens AG 2024

Function

Operating principle

LDS 6 is a gas analyzer employing single-line molecular absorption spectroscopy. A diode laser emits a beam of near-infrared light, which passes through the process gas and is detected by a detector unit. The wavelength of the laser diode output is tuned to a gas-specific absorption line. The laser continuously scans this single absorption line with a very high spectral resolution. The result is a fully resolved single molecular line which is analyzed in terms of absorption strength and line shape. The influence of cross-sensitivities on the measurement is negligible, since the quasi-monochromatic laser light is absorbed very selectively by only one specific molecular line in the scanned spectral range.

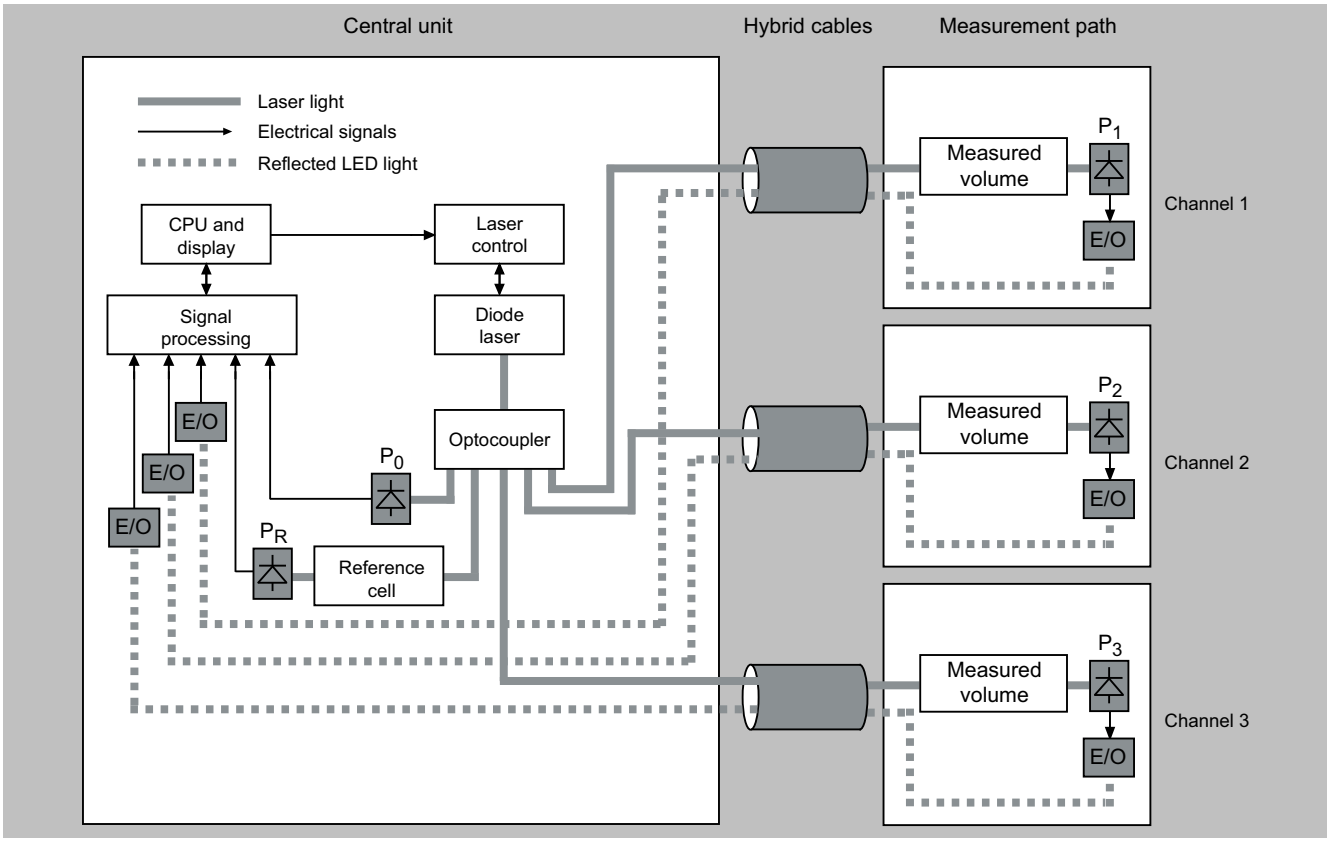

Basic design of the LDS 6

Configuration examples:

A feature of the in situ analytical procedure is that the physical measurement takes place directly in the process gas stream, and usually also directly in the actual process gas line. All process parameters such as gas matrix, pressure, temperature, moisture, dust load, flow velocity and mounting orientation can influence the measuring properties of the LDS 6 and must therefore be systematically investigated for each new application.

A feature of the standard applications defined in the ordering data of the LDS 6 is that the typical process conditions are well-known, documented, and the guaranteed measuring properties can be proven by reference installations. If you cannot find your application among the standard applications, please contact Siemens. We will be pleased to check your possible individual application of the LDS 6. You can find an application questionnaire on the LDS 6 product pages on the internet:
www.siemens.com/insituquestionnaire

© Siemens AG 2024

Function (continued)

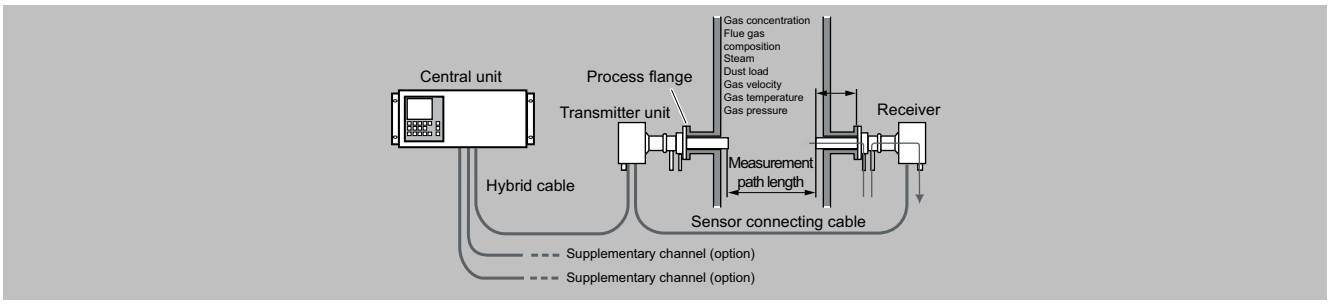

Typical transmitted light setup of LDS 6, in situ

To avoid contamination of optics on the process side, clean gaseous purging media such as instrument air, N_2 or steam are used. Purging air tubes on the optics enclosures, which slightly penetrate into the process gas stream, define the effective measuring path length.

The LDS 6 can measure in both the transverse and longitudinal directions of the process gas flow. In certain cases, the process conditions make it necessary to condition the sample gas stream in a bypass line with respect to process temperature, pressure and/or optical path length. Further treatment of the process gas, such as drying or dust precipitation, is usually unnecessary.

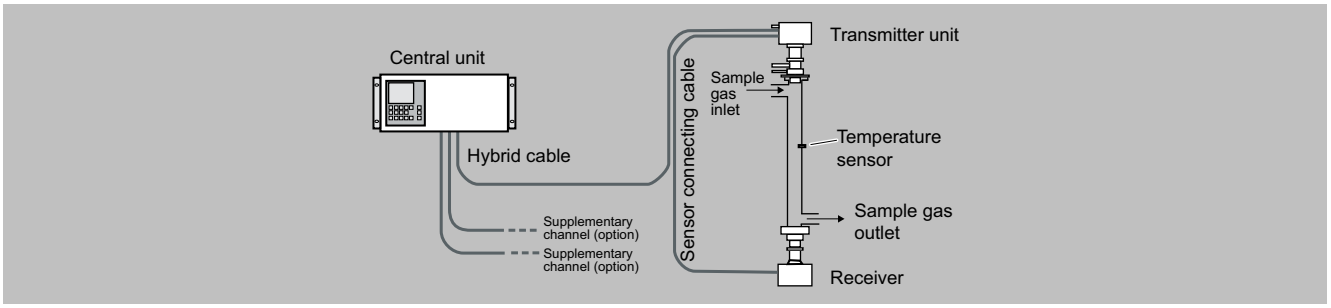

Typical transmitted light setup of LDS 6, in bypass

A flow cell is available by special application for the LDS 6 which has been specially optimized for use with the LDS 6 and its optics enclosures with respect to handling and measuring performance. It is designed to reduce surface effects, and is therefore also highly suitable for polar gases like ammonia. This flow cell is available in heated and non-heated versions. Wheel mounted and wall mounted versions are available.

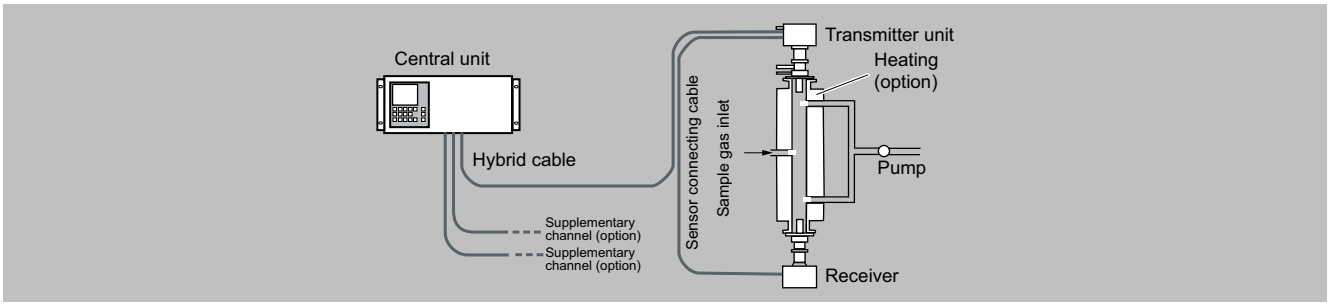

Measuring configuration of LDS 6 with heated flow cell

General information

LDS 6 is connected to the measuring points by fiber optics. The laser light is guided by a single-mode fiber from the central unit to the transmitter unit of the in situ optics enclosure. The optics enclosure consists of a transmitter and a detector. The distance between them defines the measurement path. In the detector, the light is focused onto a suitable detector. The detector signal is then converted into an optical signal and transmitted via a second optical fiber to the central unit, where the concentration of the gas component is determined from the detected absorption signal.

LDS 6 usually measures a single gas component by means of the absorption capacity of a single fully resolved molecular absorption line. The absorption results from conversion of the radiation energy of the laser light into the internal energy of the molecule.

In some specific cases, two components can be measured simultaneously if their absorption lines are so close to each other that they

© Siemens AG 2024

Function (continued)

can be detected within the laser spectrum by one single scan (for example water (H_2O) and ammonia (NH_3)).

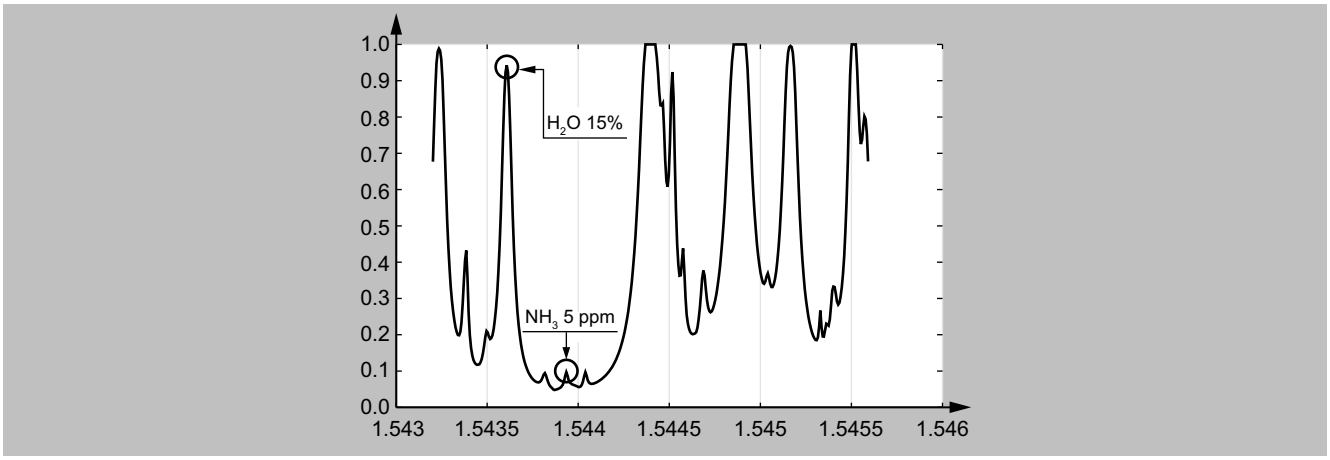

Absorption spectra of water and ammonia

Typical measurable gases for LDS 6 are:

- Hydrogen fluoride (HF) + water
- Hydrogen chloride (HCl) + water
- Ammonia (NH_3) + water
- Water vapor (H_2O)
- Carbon monoxide (CO)
- Carbon dioxide (CO_2)
- CO + CO_2

By using an internal reference cell normally filled with the gas measured, the stability of the spectrometer is continuously checked in a reference channel.

In this way, the continuous validity of the calibration is ensured without the need to carry out external re-calibration using bottled calibration gases or reference gas cells.

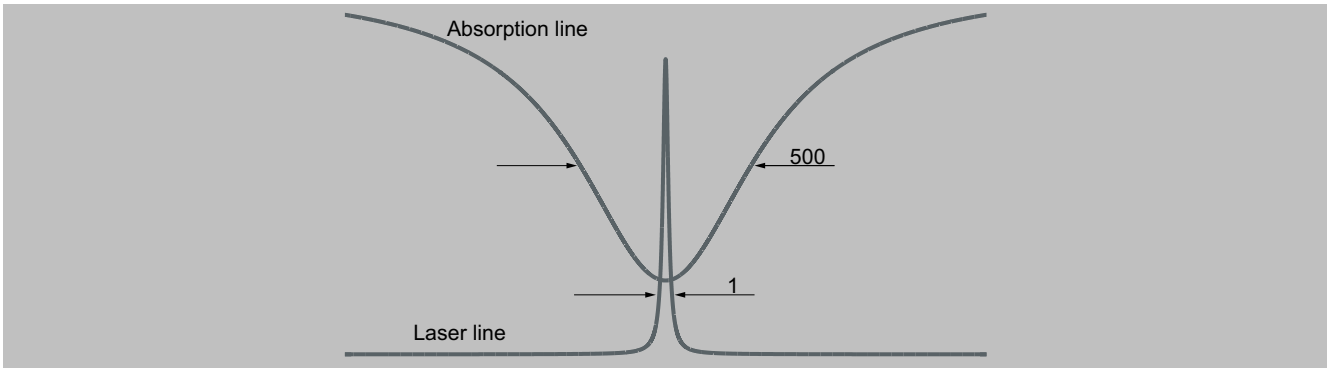

Typical spectral bandwidth of an absorption line compared to the bandwidth of the laser light.

Influences on the measurement

Dust load

As long as the laser beam is able to generate a suitable detector signal, the dust load of the process gases does not influence the analytical result. By applying a dynamic background correction, measurements can be carried out reliably and without any negative impact. Under good conditions, particle densities up to 100 g/Nm³ (distance 1 m) can be handled by the LDS 6. Varying dust loads are compensated by scanning the laser over the gas absorption line and the current background.
The effect of a high dust load is complex and depends on the path length and particle size. The optical damping increases at longer path lengths. Smaller particles also have a very large influence on the optical damping. With a combination of high dust load, long path length and small particle size, the technical support at Siemens should be consulted.

Temperature

The effect of temperature on the absorption strength of the molecular line is compensated by an adjustment factor. An analog temperature signal can be transferred to the device from an external temperature sensor. This signal is then used to correct the influence of the temperature on the observed line strength. If the temperature of the sample gas remains constant, it is alternatively possible to carry out a static correction using a preset value.
At high process gas temperatures, generally from approximately 1 000 °C, there may be noticeable broadband IR radiation of gas

© Siemens AG 2024

Function (continued)

and dust, or flames may occasionally occur in the measurement path. An additional optical bandpass filter for an LDS 6 measuring O_2 can be set upstream of the detector to protect it and prevent saturation by the strong background radiation.

Pressure

The effect of pressure on the absorption line, and consequently on the measured concentration, is compensated with an adjustment factor. The gas pressure can affect the line shape of the molecular absorption line. An analog pressure signal can be sent to the device from an external pressure sensor to fully compensate for the effect of the pressure including the density effect.

Optical path length

The absorption values analyzed by the LDS 6 are typically small. According to the Lambert-Beer law, the absorption of laser light depends on the optical path length within the gas, among other factors. Therefore, the precision in determining the effective optical path length in the process might limit the overall precision of the measurement.
As the optics on the process side normally need to be purged to keep them clean over a long period of time, the thickness of the mixing zone between the purging medium and the process gas and its concentration distribution need to be considered. In a typical in situ installation directly in the line and with some meters of path, the influence of the purging gas on the effective path length can be ignored.
Path length and dust load are mutually influencing: the higher the dust load in the process, the shorter the max. possible path length. For short path lengths in the range ≤ 0.3 m, contact Siemens Technical Support.

Maintenance and fault messages

LDS 6 outputs different warnings via relays:

- Need for maintenance (measured value is not influenced)
- Operating error (measured value might be influenced)

Note

Individual requirements for the measuring point can make the utilization of special equipment necessary. The possibilities for adapting the sensors are:

- Different purging media, such as instrument air, ambient air, nitrogen or steam
- Different purging modes on process and optics enclosure sides
- Special materials of purging tubes and/or flanges
- Cooling or heating of the optics enclosure
- Explosion-protected optics enclosure configurations

Essential characteristics

- Integrated calibration adjustment with a built-in reference cell
- Negligible long-term drifts of zero point and span
- Dynamic background correction for varying dust loads
- Isolated signal outputs, 4 to 20 mA
- User-friendly, menu-driven operation
- Selectable time constants (response time)
- Two user levels with individual access codes for prevention of unwanted and unauthorized operations
- Operation according to NAMUR recommendations
- Monitoring of overall optical signal transmission
- Remote preventive maintenance and servicing via Ethernet/modem
- Straightforward replacement of the central unit, since connections can easily be removed
- Optics enclosure and enclosure of central unit free of wear and corrosion
- Easy operation with a numerical keypad and menu prompting

Certified versions for emission monitoring

The LDS 6 is available as certified device for emission monitoring of NH_3, NH_3/H_2O, H_2O, HCl, HCl/H_2O. The certificates are issued by German Technical Inspectorate for Germany and MCERTS for the United Kingdom. Test kits for ammonia, water and HCl should be used to conduct regular calibration and linearity checks on site. These kits can be ordered separately as device accessories. For new analyzer orders, the NH_3, NH_3/H_2O and H_2O kits named "Version 2" must be ordered. For analyzers already installed, contact Siemens Technical Support to determine the correct kit version for your device. Alternatively, this information can be found in the device manual.

Verification of calibration

Assembly with certified, maintenance-free calibration gas cell with connections for laser fiber-optic conductors and detector module of the optics enclosure. These are used to rapidly verify the factory calibration in the field without compressed gas bottles or flow cell.

Calibration verification kits are available for the following sample gases: O_2, NH_3, CO, CO_2, CO/CO_2.

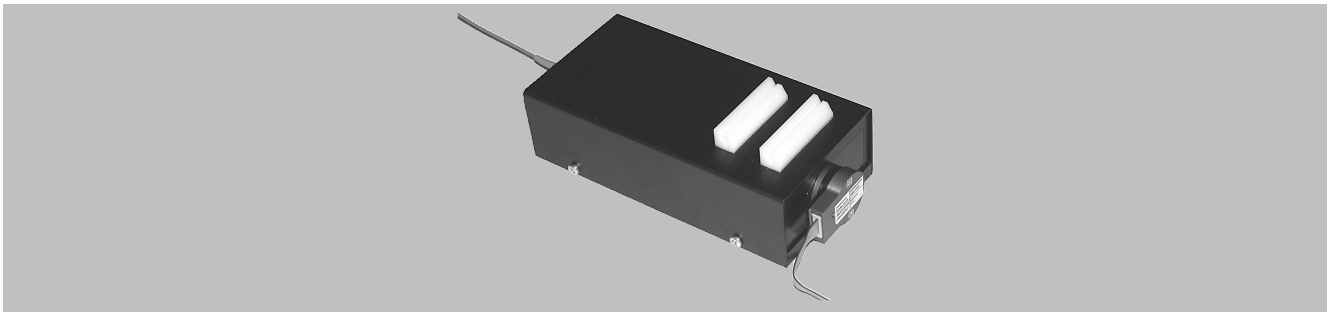

Example of an assembly for verification of calibration

© Siemens AG 2024

Selection and ordering data

LDS 6 in situ gas analyzer 19" rack unit for installation in analysis cabinets		Article No. 7MB6121-	●	●	●	0	●	-	0	●	●	●
Click on the Article No. for online configuration in the PIA Life Cycle Portal. ***Unavailable combinations are shown in PIA Life Cycle Portal as "not permitted".***												
Explosion protection[1]												
Without, not suitable for connection to Ex optics enclosure			0									
Without, suitable for connection to Ex optics enclosure in accordance with II 1 G Ex ia op is IIC T4 Ga, II 1 D Ex ia op is IIIC T135 °C Da			1									
Measured component	**Possible with application letter of the respective channel**											
NH_3	A, E, F, L, T			C								
NH_3/H_2O	A, E, F, L, T			D								
HCl	A, H, T			E								
HCl/H_2O	A, H, T			F								
HF	A, H			G								
HF/H_2O	A, H			H								
CO	C, D			J								
CO/CO_2	D			K								
CO_2	A			L								
H_2O	A, T			M								
Application letter of measured component channel 1	**Application examples channel 1** [2]											
A	Emission monitoring, non-certified				A							
C	Safety monitoring with appropriate plant concept				C							
D	Process control				D							
E	SNCR-DeNOx				E							
F	SCR-DeNOx				F							
H	Filter optimization				H							
L	Automotive, suitable for operation in accordance with regulation 595/2009/EC dated 18 June 2009 (EURO VI)				L							
T	Emission measurement, device design in accordance with QAL1 certification according to EN 14181 and EN 15267. Caution: only in combination with measured component versions C, D, M, E and F (NH_3, NH_3/H_2O, H_2O, HCl, HCl/H_2O).				T							
CD 6 optics enclosure alignment kit												
With							0					
Without							1					
Application letter of measured component channel 2	**Application examples channel 2** [2]											
A	Emission monitoring, non-certified									A		
C	Safety monitoring with appropriate plant concept									C		
D	Process control									D		
E	SNCR-DeNOx									E		
F	SCR-DeNOx									F		
H	Filter optimization									H		
L	Automotive, suitable for operation in accordance with regulation 595/2009/EC dated 18 June 2009 (EURO VI)									L		
T	Emission measurement, device design in accordance with QAL1 certification according to EN 14181 and EN 15267. Caution: only in combination with measured component versions C, D, M, E and F (NH_3, NH_3/H_2O, H_2O, HCl, HCl/H_2O).									T		
X	Channel 2 not used									X		
Application letter of measured component channel 3	**Application examples channel 3** [1] External 24 V DC power supply included in the scope of delivery											
A	Emission monitoring, non-certified										A	
C	Safety monitoring with appropriate plant concept										C	
D	Process control										D	
E	SNCR-DeNOx										E	
F	SCR-DeNOx										F	

© Siemens AG 2024

Selection and ordering data (continued)

LDS 6 in situ gas analyzer 19" rack unit for installation in analysis cabinets		Article No. 7MB6121-	●	●	●	0	●	-	0	●	●	●
H	Filter optimization										H	
L	Automotive, suitable for operation in accordance with regulation 595/2009/EC dated 18 June 2009 (EURO VI)										L	
T	Emission measurement, device design in accordance with QAL1 certification according to EN 14181 and EN 15267. Caution: only in combination with measured component versions C, D, M, E and F (NH_3, NH_3/H_2O, H_2O, HCl, HCl/H_2O).										T	
X	Channel 3 not used										X	
Language of the operating software (preset)												
German												0
English												1
French												2
Spanish												3
Italian												4

1) Complete and consistent implementation of the safety concept by the plant operator must be ensured during the commissioning and operation of the in situ laser spectrometer LDS 6 or the optics enclosure CD 6 in hazardous atmospheres.

2) The examples shown represent possible applications where appropriately configured LDS 6 solutions can be used. The user is responsible for the prevailing conditions (plant concept, possibly redundant, application of appropriate components required in addition, compliance with possible directives, etc.). It is only possible to configure the same applications for multiple channels. If needed, contact Siemens for a special application (refer to "Selection and ordering data" under "SITRANS SL (in situ O2 gas analyzer)").

Options	Order code
Add "-**Z**" to article number and then add order code.	
Settings	
Telescopic rails (2 units)	***A31***
Set of Torx tools	***A32***
Special applications	***R10 ... R39***
Tag plate, customized inscription	***Y30***
Additional label special application	***Y31***
Hardware change	***Y33***

Additional units	Article No.
Optical bandpass filter for reducing infrared background radiation (flame filter)	**A5E00534668**
External power supply for hybrid cable length > 500 m	**A5E00854188**
Calibration verification kit NH_3 (Version 2)	**A5E01075594**
German Technical Inspectorate/MCERT calibration verification kit NH_3 (Version 2), 2 cells	**A5E00823339013**
German Technical Inspectorate/MCERT calibration verification kit NH_3/H_2O (Version 2), 3 cells	**A5E00823339014**
German Technical Inspectorate/MCERT calibration verification kit H_2O (Version 2), 2 cells	**A5E00823339015**
Calibration verification kit for NH_3 (Version 1)	**A5E00534675**
German Technical Inspectorate/MCERT calibration verification kit NH_3 (Version 1), 2 cells	**A5E00823339003**
German Technical Inspectorate/MCERT calibration verification kit NH_3/H_2O (Version 1), 3 cells	**A5E00823339004**

Additional units	Article No.
German Technical Inspectorate/MCERT calibration verification kit H_2O (Version 1), 2 cells	**A5E00823339005**
German Technical Inspectorate/MCERTS calibration verification kit HCl, 2 cells	**A5E00823339008**
German Technical Inspectorate/MCERT calibration verification kit HCl/H_2O, 3 cells	**A5E00823339009**
German Technical Inspectorate/MCERT linearity verification kit H_2O (only for HCl/H_2O analyzers), 5 cells	**A5E00823339007**
German Technical Inspectorate/MCERT linearity verification kit H_2O (only for NH_3/H_2O analyzers), (Version 1), 5 cells	**A5E00823339002**
German Technical Inspectorate/MCERT linearity verification kit H_2O (only for NH_3/H_2O analyzers), (Version 2), 5 cells	**A5E00823339012**
German Technical Inspectorate/MCERT linearity verification kit HCl, 5 cells	**A5E00823339006**
German Technical Inspectorate/MCERT linearity verification kit NH_3, (Version 1), 5 cells	**A5E00823339001**
German Technical Inspectorate/MCERT linearity verification kit NH_3, (Version 2), 5 cells	**A5E00823339011**
Linearity verification kit NH_3 (Version 2), 10 cells[2)]	**A5E03693426**
Calibration verification kit for O_2 (only for application letters AA, AC and AD)	**A5E01143755001**
Calibration verification kit for CO	**A5E01143755003**
Calibration verification kit CO_2	**A5E01143755004**
Calibration verification kit for CO/CO_2	**A5E01143755006**

1) The examples shown represent possible applications where appropriately configured LDS 6 solutions can be used. The user is responsible for the prevailing conditions (plant concept, possibly redundant, application of appropriate components required in addition, compliance with possible directives, etc.). It is only possible to configure the same applications for multiple channels. If needed, contact Siemens for a special application (refer to "Selection and ordering data" under "SITRANS SL (in situ O2 gas analyzer)").

© Siemens AG 2024

Selection and ordering data (continued)

2) In combination with the CL/DL LDS 6 application, suitable for use to measure NH_3 according to the requirements of regulation 595/2009/EC "Implementing regulations on type-approval of motor vehicles and engines with respect to emissions from heavy duty vehicles (EURO VI)" dated 18 June 2009 and its regulation for implementation of number 582/2011/EC dated 25 May 2011 of the Commission of the European Union.

Other accessories

You can find more accessories and spare parts in our PIA Life Cycle Portal product selector: www.pia-portal.automation.siemens.com

Technical specifications

LDS 6, 19" central unit	
Analytical performance	
Measuring range	Depending on sample gas component: see table for standard applications.
Detection limit (DL): Calculated in accordance with VDI 2449, measured on every supplied analyzer during the temperature test (between 5 ... 45 °C) in accordance with VDI 4203.	Depending on sample gas component: see table for standard applications. For application letter ET and FT: in accordance with the requirements of 17th and 27th German Federal Immission Protection Regulations
Smallest recommended measuring range (with 1 m path length)	Depending on sample gas component: see table for standard applications.
The maximum applicable measuring ranges can be found in the table of standard combinations. These measuring ranges can only be applied if the individual process conditions allow it. Please contact the Technical Support from Siemens for checking the applicability.	
Accuracy[1]	2% / 5%, depending on sample gas component and application letter. At best: detection limit. See table for standard applications. For application letter ET and FT: in accordance with the requirements of 17th and 27th German Federal Immission Protection Regulations
Linearity	Better than 1%
Repeatability	2% of the measured value or same amount as the detection limit (whichever is larger) For application letter ET and FT: in accordance with the requirements of 17th and 27th German Federal Immission Protection Regulations
Calibration interval	No recalibration required thanks to internal reference cell
General information	
Concentration units	ppmv, Vol%, mg/Nm³
Display	Digital concentration display (5 digits with floating point representation)
Laser protection class	Class 1, safe to the eye
Certificates	CE marking, German Technical Inspectorate, MCERTS
Design, enclosure	
Degree of protection	IP20 according to EN 60529
Dimensions	177 × 440 × 380 mm
Weight	Approx. 13 kg
Mounting	Horizontal
Electrical characteristics	
Power supply	100 ... 240 V AC 50 ... 60 Hz, automatically adapted by the system; with a 3-channel central unit, an additional external power supply unit +24 V DC, 50 VA is included in the scope of delivery
Power consumption	50 W
EMC	According to EN 61326 and standard classification of NAMUR NE21
Electrical safety	According to EN 61010-1, overvoltage classification II
Fuse specifications	100 ... 240 V: T2.5L250V

Technical specifications (continued)

LDS 6, 19" central unit	
Time response	
Warm-up time at 20 °C ambient temperature	Approx. 15 min
Response time	Min. of 1 s, depending on application
Integration time	1 ... 100 s, adjustable
Influencing quantities	
Ambient temperature	< 0.5%/10 K of the measured value
Atmospheric pressure	Negligible
Process gas pressure compensation	Recommended
Process gas temperature compensation	Recommended
Process gas pressure range	See table for standard applications
Power supply changes	< 1%/30 V
Electrical inputs and outputs	
Number of measurement channels	1 ... 3, optional
Analog output	2 per channel, 4 ... 20 mA, floating, ohmic resistance max. 750 Ω
Analog inputs	2 per channel, designed for 4 ... 20 mA, 50 Ω
Digital outputs	6 per channel, with changeover contacts, configurable, 24 V AC/DC/1 A, floating
Digital inputs	6 per channel, designed for 24 V, floating, configurable
Communications interface	Ethernet 10BaseT (RJ45)
Climatic conditions	
Temperature range	5 ... 45 °C during operation, -40 ... +70 °C during storage and transportation
Atmospheric pressure	800 ... 1 200 hPa
Humidity	< 85% relative humidity, above dew point (in operation and storage)

1) The accuracy corresponds to intrinsic uncertainty according to IEC 61207 for 7MB6121-xKD00-0xxx

© Siemens AG 2024

Dimensional drawings

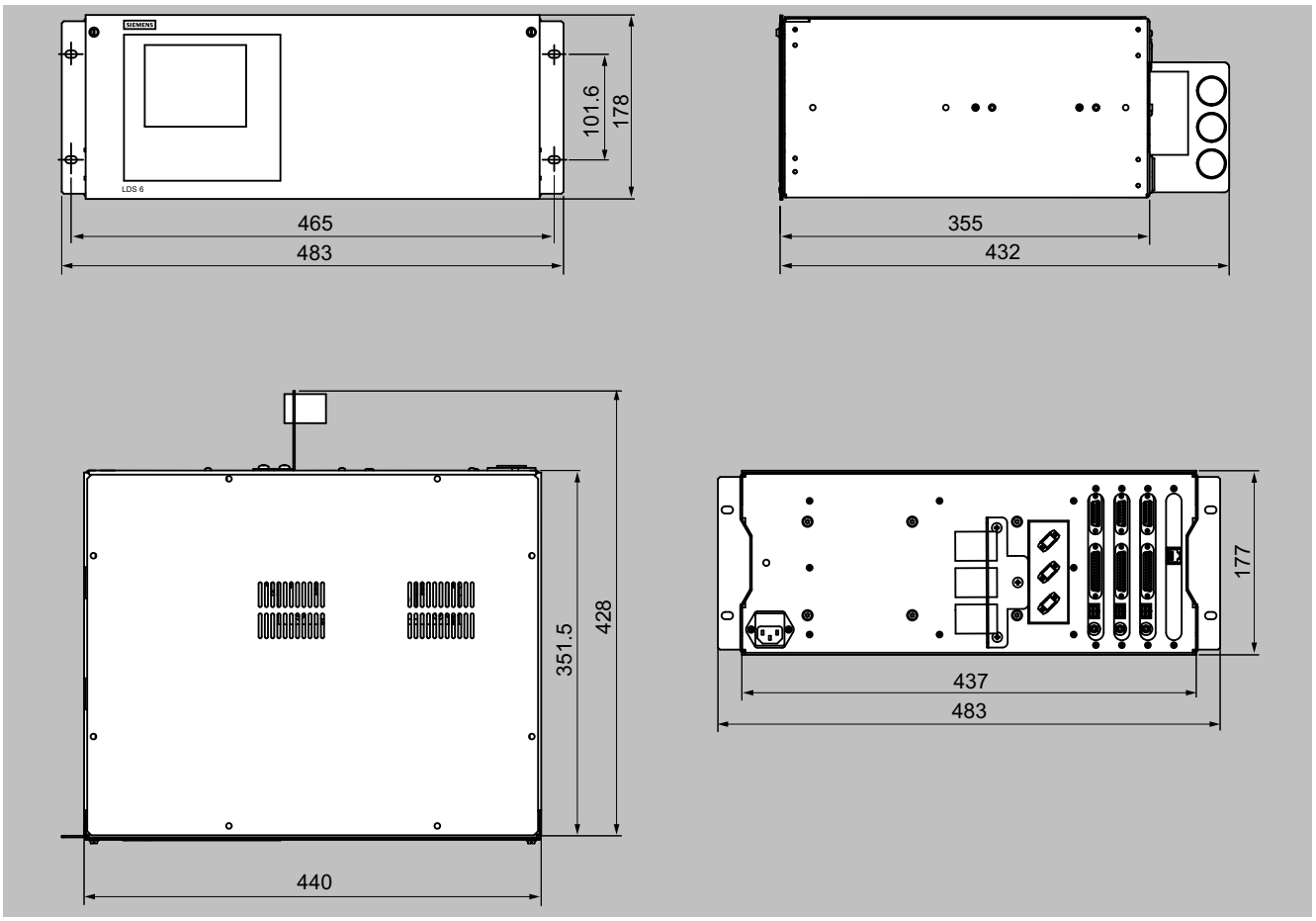

LDS 6, 19" central unit, dimensions in mm

© Siemens AG 2024

Circuit diagrams

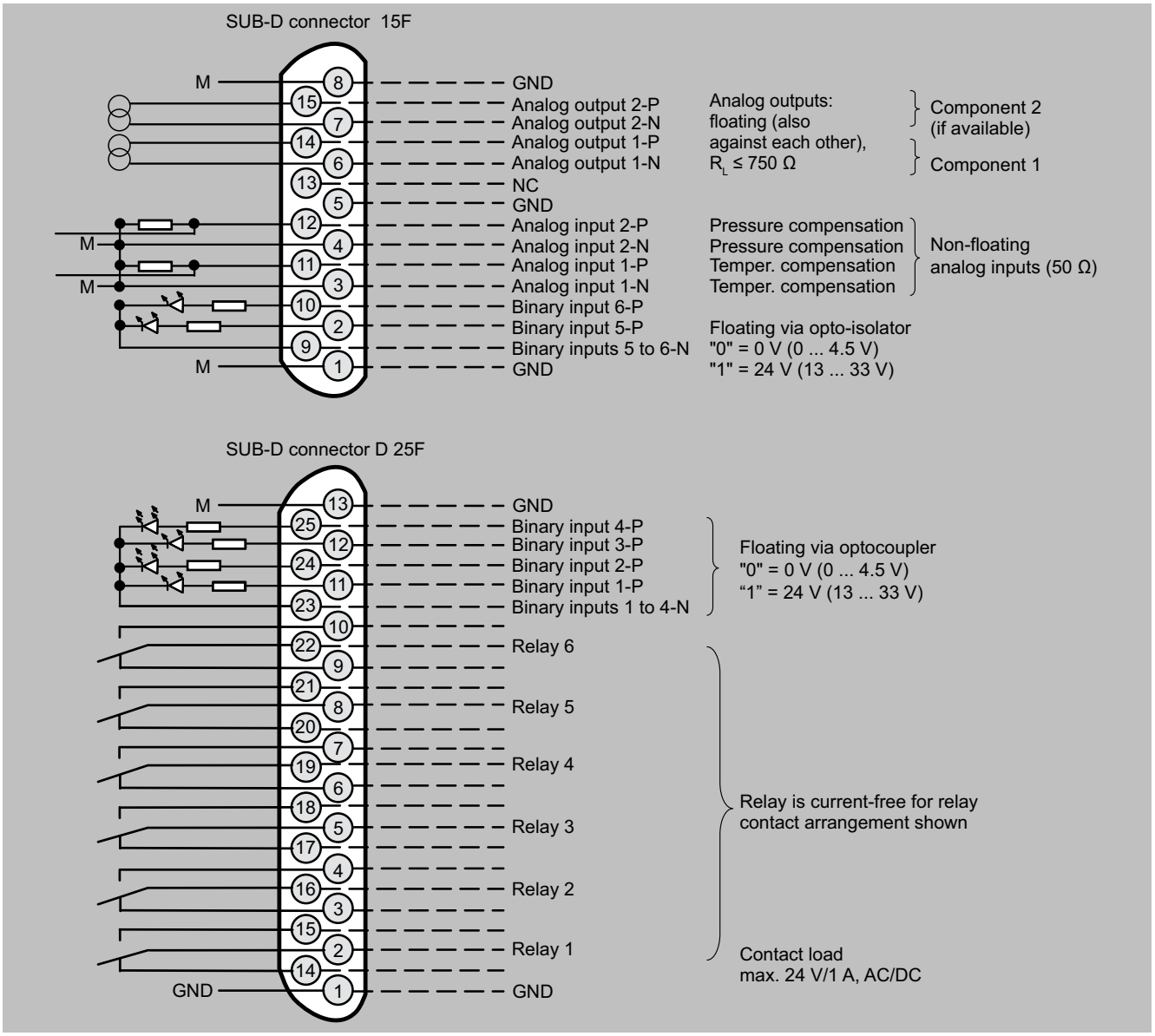

LDS 6, 19" central unit, pin assignments

© Siemens AG 2024

Circuit diagrams (continued)

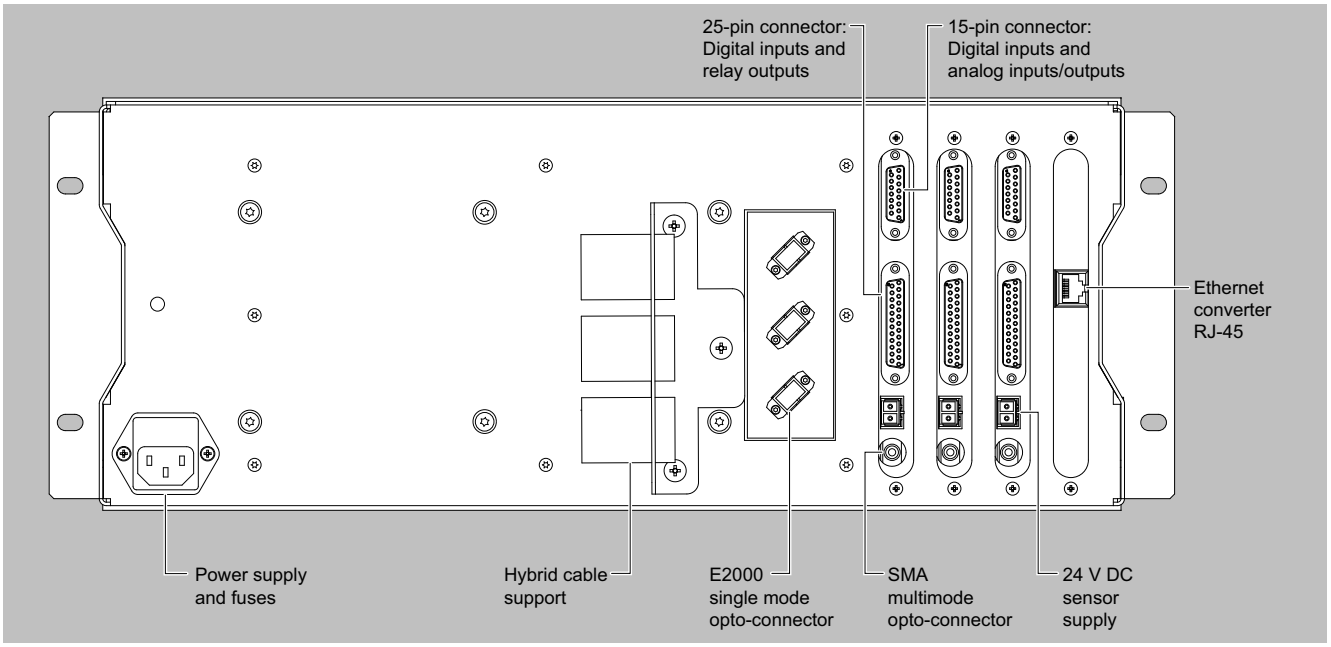

LDS 6, three-channel 19" central unit, optical and electrical connections

© Siemens AG 2024

More information

The following tables list the measuring conditions for standard applications. The listed values for the measuring range and detection limit (DL) are only approximate values. The exact values at the respective measuring point depend on the totality of all influencing parameters and can be determined by Siemens for the specific case. Note that the values for the detection limit and the maximum measuring range are based on a path length of 1 m. Longer path lengths will improve the detection limit, but not linearly. This is due to restrictive effects such as dust load. The maximum applicable measuring ranges can only be used if permitted by the process conditions (e.g. dust load).

Standard application Effective optical path length: 0.3 ... 12 m Dust load[2]: < 50 g/Nm³				Process gas temperature T_{min} ... T_{max}	Process gas pressure p_{min} ... p_{max}	Min. measuring range (with 1 m eff. opt. path length)	Max. measuring range (also dependent on effective optical path length: see next column)	Max. measuring range x path length	DL x path length (under standard conditions [1] without cross-interference from other gases)	DL x path length (at 1 013 hPa with cross-interference from gas 2)	Accuracy [3]
Gas 1	Gas 2	Gas code	Appl. code			Gas 1	Gas 1	Gas 1	Gas 1	Gas 1	Gas 1
NH_3		C	A	0 ... 150 °C	950 ... 1 050 hPa	0 ... 25 ppmv	0 ... 500 ppmv	2 500 ppmv*m	0.5 ppmv*m	0.9 ppmv*m at 15 vol% H_2O, 55 °C	2%
			T[6]	0 ... 200 °C	950 ... 1 050 hPa	0 ... 25 ppmv	0 ... 500 ppmv	2 500 ppmv*m	0.5 ppmv*m	0.9 ppmv*m at 15 vol% H_2O, 55 °C	2%
			E	250 ... 350 °C	950 ... 1 050 hPa	0 ... 45 ppmv	0 ... 500 ppmv	2 500 ppmv*m	0.9 ppmv*m at 250 °C	1.4 ppmv*m at 15 vol% H_2O, 250 °C	2%
			F	300 ... 400 °C	950 ... 1 050 hPa	0 ... 50 ppmv	0 ... 500 ppmv	2 500 ppmv*m	1 ppmv*m at 300 °C	1.5 ppmv*m at 15 vol% H_2O, 300 °C	2%
			L[4]	0 ... 400 °C[5]	920 ... 1 120 hPa	0 ... 15 ppmv	0 ... 500 ppmv	2 500 ppmv*m	0.5 ppmv*m	1.4 ppmv*m at 15 vol% H_2O, 250 °C	2%
NH_3	H_2O	D	A	0 ... 150 °C	950 ... 1 050 hPa	0 ... 25 ppmv	0 ... 100 ppmv	1 200 ppmv*m	0.5 ppmv*m	0.9 ppmv*m at 15 vol% H_2O, 55 °C	2%
			T[6]	0 ... 200 °C	950 ... 1 050 hPa	0 ... 25 ppmv	0 ... 100 ppmv	1 200 ppmv*m	0.5 ppmv*m	0.9 ppmv*m at 15 vol% H_2O, 55 °C	2%
			E	250 ... 350 °C	950 ... 1 050 hPa	0 ... 45 ppmv	0 ... 100 ppmv	1 200 ppmv*m	0.9 ppmv*m at 250 °C	1.4 ppmv*m at 15 vol% H_2O, 250 °C	2%
			F	300 ... 400 °C	950 ... 1 050 hPa	0 ... 50 ppmv	0 ... 100 ppmv	1 200 ppmv*m	1 ppmv*m at 300 °C	1.5 ppmv*m at 15 vol% H_2O, 300 °C	2%
			L[4]	0 ... 400 °C[5]	920 ... 1 120 hPa	0 ... 15 ppmv	0 ... 100 ppmv	1 200 ppmv*m	0.5 ppmv*m	1.4 ppmv*m at 15 vol% H_2O, 250 °C	2%
HCl		E	A	0 ... 150 °C	950 ... 1 050 hPa	0 ... 30 ppmv	0 ... 6 000 ppmv	1 200 ppmv*m	0.6 ppmv*m	2.2 ppmv*m at 15% H_2O, 55 °C	5%
			T	120 ... 210 °C	950 ... 1 050 hPa	0 ... 10 ppmv	0 ... 60 ppmv	720 ppmv*m			
			H	150 ... 250 °C	950 ... 1 050 hPa	0 ... 50 ppmv	0 ... 6 000 ppmv	1 200 ppmv*m	1.0 ppmv*m At 150 °C	3.1 ppmv*m at 15 vol% H_2O, 150 °C	5%
HCl	H_2O	F	A	0 ... 150 °C	950 ... 1 050 hPa	0 ... 30 ppmv	0 ... 100 ppmv	1 200 ppmv*m	0.6 ppmv*m	2.2 ppmv*m at 15% H_2O, 55 °C	5%
			T	120 ... 210 °C	950 ... 1 050 hPa	0 ... 10 ppmv	0 ... 60 ppmv	720 ppmv*m			
			H	150 ... 250 °C	950 ... 1 050 hPa	0 ... 50 ppmv	0 ... 100 ppmv	1 200 ppmv*m	1.0 ppmv*m at 150 °C	3.1 ppmv*m at 15 vol% H_2O, 150 °C	5%

1) All technical specifications apply to an optical path distance of 1 m in a nitrogen atmosphere under standard conditions 25 °C (or T_{min}) and 1 013 hPa. The effective detection limit, the measuring range and the accuracy can be influenced by process parameters such as pressure, temperature and gas composition. Not all combinations of maximum pressure and temperature can be realized with the minimum measuring ranges. If the process conditions deviate from the specifications of the standard applications, special applications are also possible on request.
Complete the application questionnaire which can be found on the internet at www.siemens.com/insituquestionnaire .

2) With 0.3 m effective optical path length, average diameter of dust particles: 15 µm, specific weight of dust particles: 650 kg/m³.

3) At least: detection limit.

4) Suitable for use to measure NH_3 according to requirements of Directive 595/2009/EC "Implementing regulations on type-approval of motor vehicles and engines with respect to emissions from heavy duty vehicles (EURO VI)" from 18 June 2009 and its regulation for implementation of number 582/2011/EC from 25 May 2011 of the Commission of the European Union.

© Siemens AG 2024

More information (continued)

5) Device also able to operate above 400 °C to 1 000 °C. Due to decomposition of NH_3 at higher temperatures, no specification can be given in these ranges.
6) In the temperature range 150 to 200 °C, only the specified requirements according to EN 15267 QAL1 are fulfilled.

Standard application Effective optical path length: 0.3 … 12 m Dust load[3]: < 50 g/Nm³				Min. measuring range (with 1 m eff. opt. path length)	Max. measuring range (usually also dependent on effective optical path length: see next column)	Max. measuring range x path length	DL x path length (under standard conditions) [1] [2]	DL x path length (at 1 013 hPa with cross-interference from gas 1)	Accuracy [4]	Purging gas mode		Purging gas medium
Gas 1	Gas 2	Gas code	Appl. code	Gas 2	Gas 2	Gas 2	Gas 2	Gas 2	Gas 2	Standard	Optional	
NH_3		C	A							C	G	Air
			T							C	G	Air
			E							E	G	Air
			F							E	G	Air
			L							C	D	Air
NH_3	H_2O	D	A	0 … 5 vol%	0 … 30 vol%	240 vol%*m	0.1 vol%*m	0.1 vol%*m	5%	C	G	Air
			T	0 … 5 vol%	0 … 30 vol%	240 vol%*m	0.1 vol%*m	0.1 vol%*m	5%	C	G	Air
			E	0 … 5 vol%	0 … 30 vol%	240 vol%*m	0.1 vol%*m at 250 °C	0.1 vol%*m at 250 °C	5%	E	G	Air
			F	0 … 5 vol%	0 … 30 vol%	240 vol%*m	0.1 vol%*m at 300 °C	0.1 vol%*m at 300 °C	5%	E	G	Air
			L	0 … 5 vol%	0 … 30 vol%	250 vol%*m	0.1 vol%*m at 250 °C	0.1 vol%*m at 250 °C	5%	C	D	Air
HCl		E	A							C	G	Air
			T							C	G	Air
			H							E	G	Air
HCl	H_2O	F	A	0 … 5 vol%	0 … 30 vol%	360 vol%*m	0.1 vol%*m	0.1 vol%*m	5%	C	G	Air
			T	0 … 5 vol%	0 … 30 vol%	360 vol%*m				C	G	Air
			H	0 … 5 vol%	0 … 30 vol%	360 vol%*m	0.1 vol%*m at 150 °C	0.1 vol%*m at 150 °C	5%	E	G	Air

1) At 20 °C, 1 013 hPa.
2) If the smallest permissible process gas temperature of the application is T_{min} > 20 °C, the DL refers to T_{min} and standard pressure (1 013 hPa).
3) At 0.3 m optical path length, average diameter of dust particles: 15 µm, specific weight of dust particles: 650 kg/m³.
4) At least: detection limit.

Standard application Effective optical path length: 0.3 … 12 m Dust load[2]: < 50 g/Nm³				Process gas temperature T_{min} … T_{max}	Process gas pressure p_{min} … p_{max}	Min. measuring range (with 1 m eff. opt. path length)	Max. measuring range (also dependent on effective optical path length: see next column)	Max. measuring range x path length	DL x path length (under standard conditions[1]) without cross-interference from other gases)	DL x path length (at 1 013 hPa with cross-interference from gas 2)	Accuracy [3]
Gas 1	Gas 2	Gas code	Appl. code			Gas 1	Gas 1	Gas 1	Gas 1	Gas 1	Gas 1
HF		G	A	0 … 150 °C	950 … 1 050 hPa	0 … 5 ppmv	0 … 1 500 ppmv	200 ppmv*m	0.1 ppmv*m	0.6 ppmv*m at 15 vol% H_2O, 55 °C	5%
			H	150 … 250 °C	950 … 1 050 hPa	0 … 5 ppmv	0 … 1 500 ppmv	200 ppmv*m	0.11 ppmv*m at 150 °C	0.6 ppmv*m at 15 vol% H_2O, 150 °C	5%
HF	H_2O	H	A	0 … 150 °C	950 … 1 050 hPa	0 … 5 ppmv	0 … 200 ppmv	200 ppmv*m	0.1 ppmv*m	0.6 ppmv*m at 15 vol% H_2O, 55 °C	5%
			H	150 … 250 °C	950 … 1 050 hPa	0 … 5 ppmv	0 … 200 ppmv	200 ppmv*m	0.11 ppmv*m at 150 °C	0.6 ppmv*m at 15 vol% H_2O, 150 °C	5%
CO		J	C	0 … 600 °C	950 … 1 050 hPa	0 … 1.5 vol%	0 … 100 vol%	40 vol%*m	300 ppmv*m	1 000 ppmv*m at 50 vol% CO_2, 20 °C	2%
CO	CO_2	K	D	0 … 400 °C	800 …1 400 hPa	0 … 5 vol%	0 … 100 vol%	0 … 200 vol%*m	0.1 vol%*m	0.5 vol% at 50 vol% CO_2, 20 °C	2% [4]
CO_2		L	A	0 … 150 °C	950 … 1 050 hPa	0 … 7.5 vol%	0 … 100 vol%	40 vol%*m	300 ppmv*m		2%

© Siemens AG 2024

More information (continued)

Standard application Effective optical path length: 0.3 ... 12 m Dust load[2]: < 50 g/Nm³				Process gas temperature T_{min} ... T_{max}	Process gas pressure p_{min} ... p_{max}	Min. measuring range (with 1 m eff. opt. path length)	Max. measuring range (also dependent on effective optical path length: see next column)	Max. measuring range x path length	DL x path length (under standard conditions[1] without cross-interference from other gases)	DL x path length (at 1 013 hPa with cross-interference from gas 2)	Accuracy [3]
Gas 1	Gas 2	Gas code	Appl. code			Gas 1	Gas 1	Gas 1	Gas 1	Gas 1	Gas 1
H_2O		M	A	0 ... 150 °C	950 ... 1 050 hPa	0 ... 5 vol%	0 ... 30 vol%	240 vol%*m	0.1 vol%*m		5%
			T[5]	0 ... 200 °C	950 ... 1 050 hPa	0 ... 5 vol%	0 ... 30 vol%	240 vol%*m	0.1 vol%*m		5%

1) All technical specifications apply to an optical path distance of 1 m in a nitrogen atmosphere under standard conditions 25 °C (or T_{min}) and 1 013 hPa. The effective detection limit, the measuring range and the accuracy can be influenced by process parameters such as pressure, temperature and gas composition. Not all combinations of maximum pressure and temperature can be realized with the minimum measuring ranges. If the process conditions deviate from the specifications of the standard applications, special applications are also possible on request.
Complete the application questionnaire which can be found on the internet at www.siemens.com/insituquestionnaire.
2) With 0.3 m effective optical path length, average diameter of dust particles: 15 µm, specific weight of dust particles: 650 kg/m³.
3) At least: detection limit.
4) Accuracy corresponds to intrinsic uncertainty acc. to IEC 61207: 2% of MV (0 ... 200 °C); 2.5% of MV (0 ... 400 °C); at best 0.25 vol%*m.
5) In the temperature range 150 to 200 °C, only the specified requirements according to EN 15267 QAL1 are fulfilled.

Standard application Effective optical path length: 0.3 ... 12 m Dust load[3]: < 50 g/Nm³				Min. measuring range (with 1 m eff. opt. path length)	Max. measuring range (usually also dependent on effective optical path length: see next column)	Max. measuring range x path length	DL x path length (under standard conditions) [1] [2]	DL x path length (at 1 013 hPa with cross-interference from gas 1)	Accuracy [4]	Purging gas mode		Purging gas medium
Gas 1	Gas 2	Gas code	Appl. code	Gas 2	Gas 2	Gas 2	Gas 2	Gas 2	Gas 2	Standard	Optional	
HF		G	A							C	G	Air
			H							E	G	Air
HF	H_2O	H	A	0 ... 5 vol%	0 ... 30 vol%	360 vol%*m	0.1 vol%*m	0.1 vol%*m	5%	C	G	Air
			H	0 ... 5 vol%	0 ... 30 vol%	360 vol%*m	300 ppmv*m at 200 °C	300 ppmv*m at 200 °C	5%	E	G	Air
CO		J	C							E	G	Air, N_2
CO	CO_2	K	D	0 ... 10 vol%	0 ... 100 vol%	0 ... 200 vol%*m	0.2 vol%*m	1 vol% at 50 vol% CO, 20 °C	5%[5]	C	G	Air
CO_2		L	A							C	G	Air
H_2O		M	A							C	G	Air
			T							C	G	Air

1) At 20 °C, 1 013 hPa
2) If the smallest permissible process gas temperature of the application is T_{min} > 20 °C, the DL refers to T_{min} and standard pressure (1 013 hPa)
3) At 0.3 m optical path length, average diameter of dust particles: 15 µm, specific weight of dust particles: 650 kg/m³
4) At least: Detection limit
5) Accuracy corresponds to intrinsic uncertainty acc. to IEC 61207: 5% of MV; at best 0.5 vol%*m.

Special applications

If the process conditions deviate from the specifications of the standard applications, special applications are also possible on request.

- Complete the application questionnaire which can be found on the internet at http://www.siemens.com/insituquestionnaire:

© Siemens AG 2024

More information (continued)

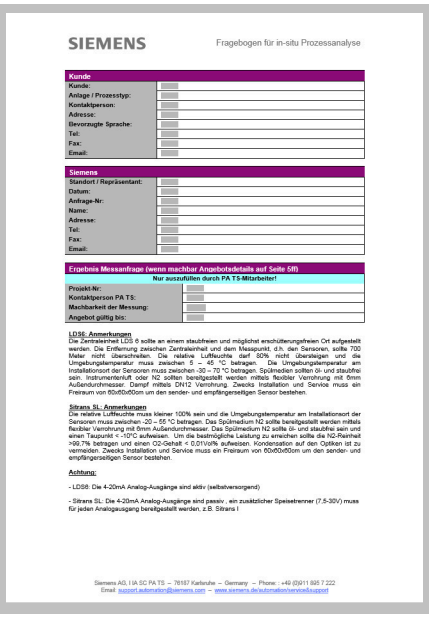

SIEMENS

Fragebogen für in-situ Prozessanalyse

Kunde	
Kunde:	
Anlage / Prozesstyp:	
Kontaktperson:	
Adresse:	
Bevorzugte Sprache:	
Tel:	
Fax:	
Email:	

Siemens	
Standort / Repräsentant:	
Datum:	
Anfrage-Nr:	
Name:	
Adresse:	
Tel:	
Fax:	
Email:	

Ergebnis Messanfrage (wenn machbar Angebotsdetails auf Seite 5ff)	
Nur auszufüllen durch PA TS-Mitarbeiter!	
Projekt-Nr:	
Kontaktperson PA TS:	
Machbarkeit der Messung:	
Angebot gültig bis:	

LDS6: Anmerkungen
Die Zentraleinheit LDS 6 sollte an einem staubfreien und möglichst erschütterungsfreien Ort aufgestellt werden. Die Entfernung zwischen Zentraleinheit und dem Messpunkt, d.h. den Sensoren, sollte 700 Meter nicht überschreiten. Die relative Luftfeuchte darf 80% nicht übersteigen und die Umgebungstemperatur muss zwischen 5 – 45 °C betragen. Die Umgebungstemperatur am Installationsort der Sensoren muss zwischen -30 – 70 °C betragen. Spülmedien sollten öl- und staubfrei sein. Instrumentenluft oder N2 sollten bereitgestellt werden mittels flexibler Verrohrung mit 6mm Außendurchmesser. Dampf mittels DN12 Verrohrung. Zwecks Installation und Service muss ein Freiraum von 60x60x60cm um den sender- und empfängerseitigen Sensor bestehen.

Sitrans SL: Anmerkungen
Die relative Luftfeuchte muss kleiner 100% sein und die Umgebungstemperatur am Installationsort der Sensoren muss zwischen -20 – 55 °C betragen. Das Spülmedium N2 sollte bereitgestellt werden mittels flexibler Verrohrung mit 6mm Außendurchmesser. Das Spülmedium N2 sollte öl- und staubfrei sein und einen Taupunkt < -70°C aufweisen. Um die bestmögliche Leistung zu erreichen sollte die N2-Reinheit >99.7% betragen und einen O2-Gehalt < 0,01Vol% aufweisen. Kondensation auf den Optiken ist zu vermeiden. Zwecks Installation und Service muss ein Freiraum von 60x60x60cm um den senden- und empfängerseitigen Sensor bestehen.

Achtung:

- LDS6: Die 4-20mA Analog-Ausgänge sind aktiv (selbstversorgend)

- Sitrans SL: Die 4-20mA Analog-Ausgänge sind passiv , ein zusätzlicher Speisetrenner (7,5-30V) muss für jeden Analogausgang bereitgestellt werden, z.B. Sitrans I

Siemens AG, I IA SC PA TS – 76187 Karlsruhe – Germany – Phone: : +49 (0)911 895 7 222
Email: support.automation@siemens.com – www.siemens.de/automation/service&support

© Siemens AG 2024

Overview

Optics enclosure CD 6 and cables for non-Ex applications

The standard optics enclosure consists of a transmitter unit and a detector unit with the same dimensions. The transmitter unit provides a connection for the fiber-optic cable. The laser light is transmitted through this fiber-optic cable. The detector unit contains a photo detector and an electronic PCB, and is connected to the transmitter unit by a connection cable.

The optics enclosures are mounted onto flanges. The easiest way to avoid condensation and dust deposits on the windows of the optics enclosure is to use a purging gas, e.g. with instrument air. Purging must be selected depending on the application. The optics enclosures can therefore be configured for the respective situation. The application reference table provides recommendations for suitable purging with standard applications.

If a component is to be measured which is also present in measurable quantities in the purging medium - such as oxygen or moisture - it is necessary to use purging gases such as nitrogen, superheated process steam or similar. In such cases, it is usually also necessary to purge the optics enclosures, since the ambient air must also be displaced here out of the laser beam path. A differentiation is therefore made between purging on the process side and purging of the optics enclosure.

The most important optics enclosure purging configurations are presented below:

Purging on the process side with moderate flow

Selected for pure gas applications, emission monitoring, inertia monitoring, for example. The purging gas flow can be adjusted between 0 and approx. 120 l/min at each optics enclosure using a needle valve (included in scope of delivery).

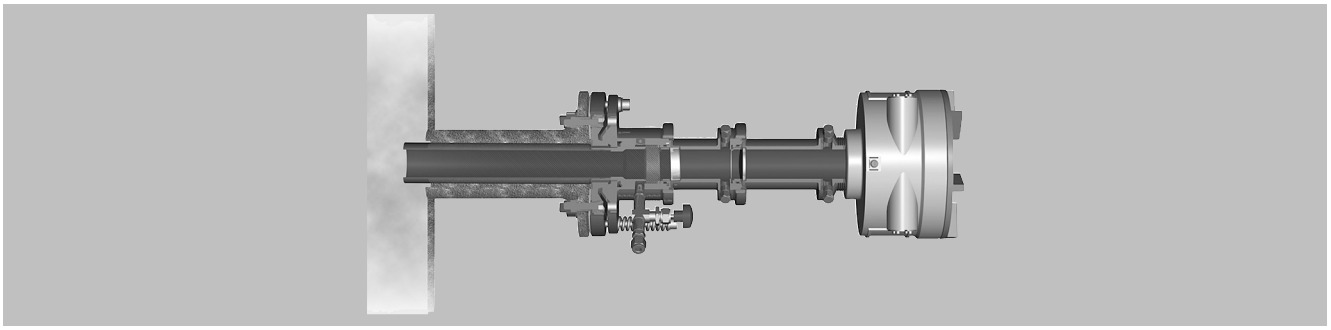

Moderate purging on the process side

Purging on the process side with increased flow

Through omission of needle valve. This type of purging is selected in crude gas applications with higher concentrations of particles and/or condensation as well as in non-purified flue gases in combustion plants. The purging gas flow is typically set between 200 and 500 l/min on each optics enclosure depending on the primary pressure of the purging medium.

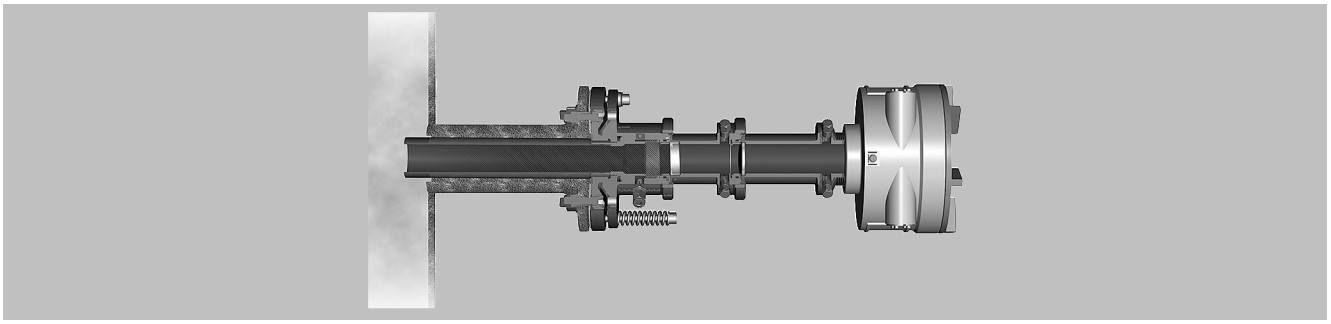

Increased purging on the process side

Purging on the process side with high flow

Through use of purging air blower or dry process steam. Connectors with hose adapters are included in the scope of delivery. An additional Swagelok adapter must be ordered if a high flow of steam or instrument air purging is required (option A27). This type of purging is selected in crude gas applications with very high concentrations of particles and/or condensation such as in the furnaces of combustion plants. If instrument air is not available, an air blower is also an alternative for purging in applications with lower demands. On the process side, dry steam can be used as the inert purging gas instead of nitrogen (Tmax. 240 °C). The purging gas flow is automatically set between 500 and <1 000 l/min on each optics enclosure depending on the purging air blower or the steam pressure.

© Siemens AG 2024

Overview (continued)

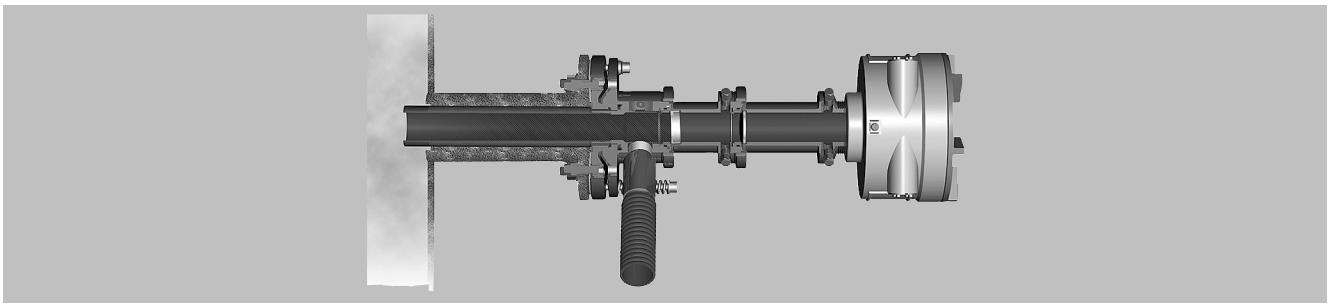

Increased purging on the process side, with hose connection adapter

Purging of the optics enclosure

Can be combined with any purging mode on the process side, and is always selected if the ambient air must never have an influence on the measurement. The volumes within the optics enclosure are then continuously purged with an O_2-free gas (with H_2O-free gas in the case of moisture measurement).

Note

No process gas may flow into the purging gas line! With purging on the process side, it may be necessary to use non-return valves to ensure no process gas can enter the purging gas line in the event of failure of the purging gas supply. Otherwise, there is a risk of zone entrainment (explosion protection). This applies especially in the case of cascaded process and sensor purging to prevent corrosive process gases from entering the optics enclosure.

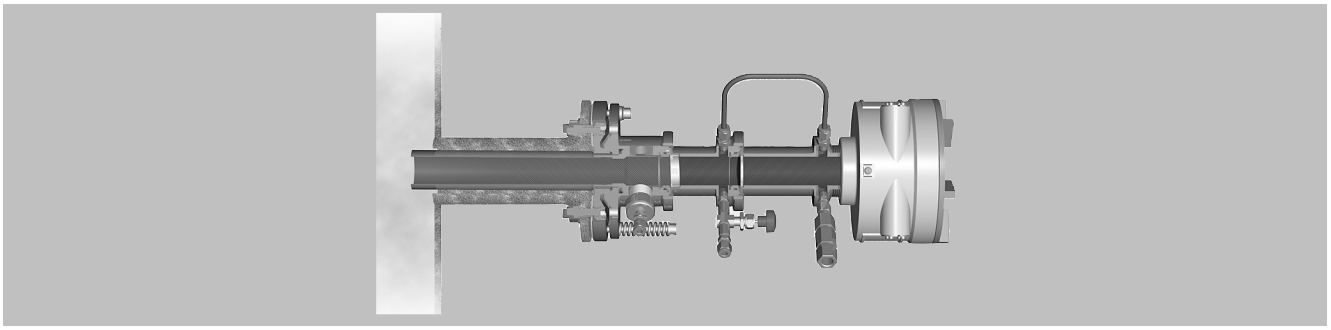

Sensor configuration with high purging on the process side, with 6 mm connector for use with steam, and with N_2 purging of the optics enclosure

The purging media used on the process side flow through purging gas tubes into the process gas flow. The pipes extend a few centimeters into the process area, and typically receive a flow of process gas from the side. This results in a wedge being generated in the inlet zone of the purging gas. The effective measuring path in the process gas is therefore well-defined as the distance between the ends of the two purging gas inlet tubes.

Optics enclosure CD 6: Options and accessories

Sensor alignment kit

Includes a battery-operated visible light source, a centering aid with crosshairs, and two hook spanners for opening the optics tube of the sensors.

Please note: The sensor alignment kit is not explosion-protected.

© Siemens AG 2024

Overview (continued)

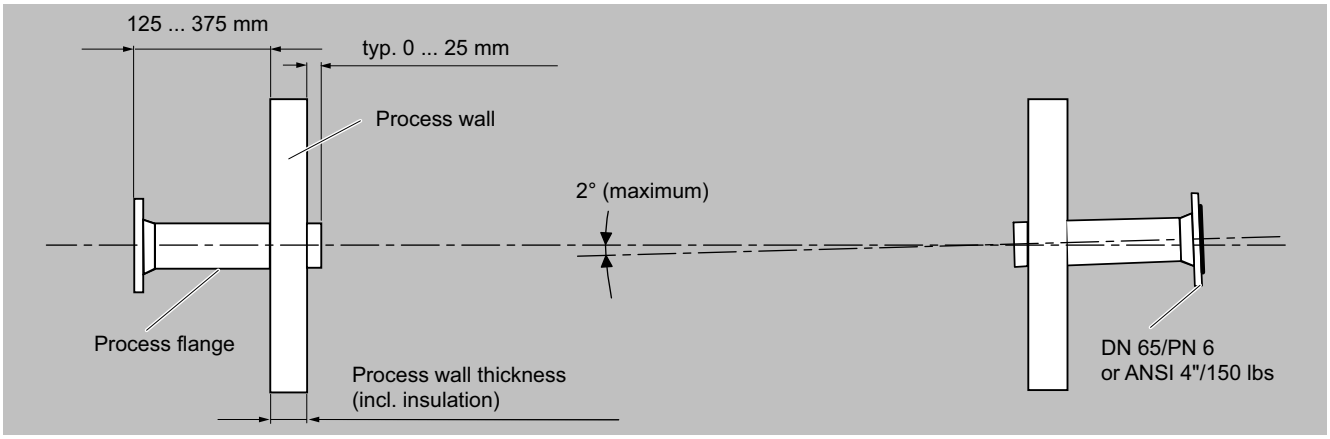

Installation requirements for the optics enclosure CD 6, dimensions in mm

Purging air blower

Two purging air blowers are required to purge the optics enclosure. Both 230 V AC and 115 V AC versions can be ordered.

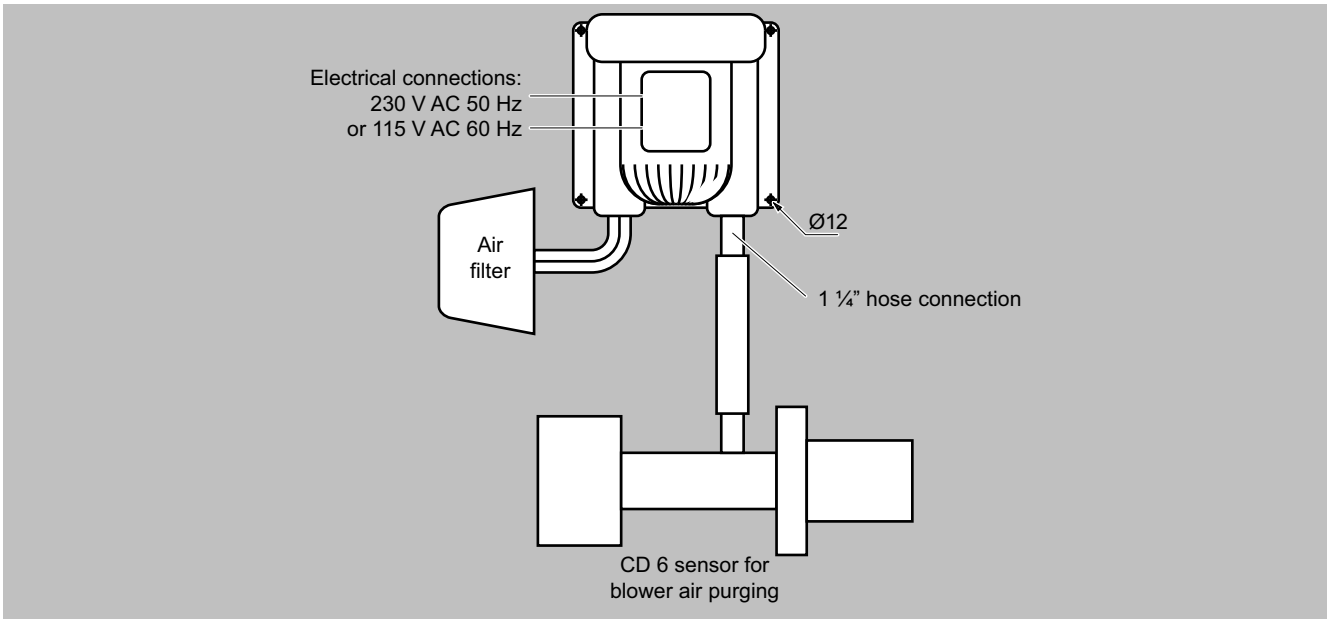

Optics enclosure configuration with purging air blower

Flow cell (available on special application)

For implementation of measuring configurations with bypass mode. The cell consists of a stainless steel tube with electropolished internal surfaces to minimize surface effects. With an effective measuring path of 1 m, the inner volume is only 1.2 l, and fast gas displacement times can therefore be achieved. The flow of sample gas can be from the ends or from the center of the pipe, since appropriate 6 mm screwed joints are present here. The flow cell can be ordered in four configurations:

- Unheated, including assembly for wall mounting
- Unheated, including assembly for wall mounting and a 19" enclosure with an air jet pump with a flow rate of max. 30 l/min
- As above, but can be heated up to approx. 200 °C
- As above, but can be heated up to approx. 200 °C and mounted on a rack with wheels and integrated 19" frame

Complete the application questionnaire which can be found on the internet at www.siemens.com/insituquestionnaire .

© Siemens AG 2024

Selection and ordering data

LDS 6 in situ gas analyzer Optics enclosure pair		Article No. 7MB6122-	●	●	●	●	●	-	●	●	●	●
Click on the Article No. for online configuration in the PIA Life Cycle Portal. ***Unavailable combinations are shown in PIA Life Cycle Portal as "not permitted".***												
Explosion protection[1]												
Without			0									
Explosion protection: in accordance with ATEX II 1 G Ex ia op is IIC T4 Ga, ATEX II 1 D Ex ia op is IIIC T135 °C Da, IEC Ex ia op is IIC T4 Ga, IEC Ex ia op is IIIC T135 °C Da; For Ex zone 0 and 1, the maximum hybrid cable length is 250 m for Ex reasons. In hazardous zone 2 and non-Ex scenarios, longer cables (up to 700 m) are also permitted.			1									
Measured component												
All gases except O_2				W								
Purging: Process side	**Purging: Optics enclosure**											
Without purging	Without purging				A							
Without purging	Air or N_2, 1 ... 2 l/min incl. Needle valve, 6 mm Swagelok				B							
Instrument air or N_2 according to flow: 0 ... 120 l/min including Needle valve, 6 mm Swagelok	Without purging				C							
Instrument air or N_2 according to flow: 0 ... 120 l/min including Needle valve, 6 mm Swagelok	Air or N_2, 1 ... 2 l/min incl. Needle valve, 6 mm Swagelok				D							
Air or N_2 increased flow: 200 ... 500 l/min including 6 mm Swagelok	Without purging				E							
Air or N_2 increased flow: 200 ... 500 l/min including 6 mm Swagelok	Air or N_2, 1 ... 2 l/min incl. Needle valve, 6 mm Swagelok				F							
Air, fan or steam; high flow: > 500 l/min including 1 ¼" hose adapter	Without purging				G							
Air, fan or steam; high flow: > 500 l/min including 1 ¼" hose adapter	Air or N_2, 1 ... 2 l/min incl. Needle valve, 6 mm Swagelok				H							
Material of purging tubes												
Without purging tubes						0						
Stainless steel, EN 1.4432/316L						1						
Polypropylene						2						
Length of purging tubes												
Without purging tubes							0					
400 mm							1					
800 mm							2					
1 200 mm							3					
75 mm, e.g. for engine test rigs							4					
Special length							9					
Process connection												
Stainless steel flange (1.4404/316L), connection dimensions DN 65/PN 6, MAWP (PS) at 20 °C: 0.05 MPa									0			
Stainless steel flange (1.4404/316L), connection dimensions ANSI 4"/150 lbs, MAWP (PS) at 20 °C: 7.25 psi									1			
Stainless steel flange (1.4404/316L), connection dimensions DN 65/PN 6, MAWP (PS) at 20 °C: 0.05 MPa, including enclosed welding flanges, e.g. for engine test rigs									2			
Flameproof window flange (1.4404/316L, borosilicate glass), connection dimensions DN 65/PN 6, MAWP (PS) at 20 °C: 0.6 MPa									3			
Flameproof window flange (1.4404/316L, borosilicate glass), connection dimensions DN 80/PN 16, MAWP (PS) at 20 °C: 1.6 MPa									4			
Flameproof window flange (1.4404/316L, borosilicate glass), connection dimensions ANSI 4"/150 lbs, MAWP (PS) at 20 °C: 232 psi									5			
Hybrid cable												
No hybrid cable										X		
Standard lengths												
• 5 m										A		
• 10 m										B		
• 25 m										E		

© Siemens AG 2024

Selection and ordering data (continued)

LDS 6 in situ gas analyzer Optics enclosure pair	Article No. 7MB6122-	●	●	●	●	●	-	●	●	●	●
• 40 m									G		
• 50 m									H		
• 75 m									L		
• 100 m									P		
• 150 m									R		
• 200 m									U		
Customized length: Specified in full meters									Z		
Sensor cable											
No sensor connecting cable										X	
Standard lengths											
• 5 m										A	
• 10 m										B	
• 25 m										E	
Customized length: Specified in full meters										Z	
Operating software											
Digital documentation											9

1) Complete and consistent implementation of the safety concept by the plant operator must be ensured during the commissioning and operation of the in situ laser spectrometer LDS 6 or the optics enclosure CD 6 in hazardous atmospheres.

Options	Order code
Add "-**Z**" to article number and then add order code.	
Settings	
6 mm Swagelok adapter for purging with steam, purging modes G and H	***A27***
Inspection certificate 3.1 (leak test) in accordance with EN 10204 (only in combination with flameproof window flanges)	***C12***
Inspection certificate 3.1 (material certificate) in accordance with EN 10204 (only in combination with flameproof window flanges)	***C13***
Purging tubes: Special materials	***L1Y***
Purging tubes: Special length	***M1Y***

Options	Order code
Customer-specific process connection	***N1Y***
Hybrid cable, customized length	***P1Y***
Sensor connecting cable, customized length	***Q1Y***
Special applications	***R10 ... R39***
Tag plate, customized inscription	***Y30***
Additional plate	***Y31***
Special application number	***Y33***

Additional units	Article No.
CD 6, purging air blower 230 V/50 Hz	**A5E00829151**
CD 6, purging air blower 115 V/60 Hz	**A5E00829150**
CD 6, sensor alignment kit	**A5E00253142**
SITRANS SL, flashlight with adapter	**A5E33259745**

© Siemens AG 2024

Technical specifications

LDS 6, optics enclosure CD 6	
General information	
Design	Transmitter and detector units, connected by a sensor cable
Materials	Stainless steel (1.4305/303), aluminum
Installation	Vertical or parallel to the gas flow
Laser protection class	Class 1, safe to the eye
Explosion protection	II 1 G Ex ia op is IIC T4 Ga II 1 D Ex ia op is IIIC T135 °C Da A defined leak rate can only be guaranteed when using high-pressure window flanges. Otherwise, it may be necessary for the owner to carry out an evaluation in accordance with ATEX DEMKO 06 ATEX 139648X; IECEx UL 13.0029X NEPSI Ex (China): GYJ21.1196X PESO (India): A/P/HQ/MH/104/6980 (P524397) KCS (Korea): 15-AV4BO-0647, 15-AV4BO-0648 TIIS (Japan): TC20953 UKEX (United Kingdom): UL22UKEX2642X Rev. 0
Design, enclosure	
Degree of protection	IP65
Dimensions	Diameter: 163, L: 450 mm
Purging gas tube in mm	400 (370 net) × 44 × 40 800 (770 net) × 54 × 40 1 200 (1 170 net) × 54 × 40
Weight	2 × approx. 11 kg
Mounting	DN 65/PN 6, DN 80/PN 16 or ANSI 4"/150 lbs
Please note: • For purging gas tubes with a length of 800 and 1 200 mm, the wall thickness must not exceed 200 mm with DN 65/PN 6 connections. To carry out measurements with thicker walls, please contact Siemens. • The optimum adjustment of the flanges can change with high differences in temperature between the process and environment depending on the mounting type.	
Electrical characteristics	
Power supply	24 V DC, supply from central unit via hybrid cable
Power consumption	< 2 W with non-Ex configuration, max. 0.6 W with Ex configuration
Climatic conditions	
Optics enclosure temperature	
Non-Ex	-20 ... +70 °C in operation -30 ... +70 °C during transport and storage
Ex	-20 ... +60 °C in operation -30 ... +70 °C during transport and storage
Humidity	< 95% RH, above dew point
Pressure	800 ... 1 100 hPa
Temperature range on the optics enclosure of the process interface (terminal plate)	-20 ... +70 °C
Measuring conditions	
Measurement path	0.3 ... 12 m (other path lengths on request)
Dust load	The influence of dust is very complex and depends on the path length and particle size. The optical damping increases exponentially at longer path lengths. Smaller particles also have a very large influence on the optical damping. With high dust load, long path length and small particle size, the technical support at Siemens should be consulted.

Technical specifications (continued)

LDS 6, accessories	
Purging	
Nitrogen is permissible as the purging gas for the optics enclosure. Nitrogen, steam, air and gases which are not subject to the pressure equipment directive Cat. 2 are permissible as purging gases for the process side.	
Purging with instrument air, N_2	
• Max. overpressure in the sensor	< 500 hPa
• Quality	
- Instrument air	According to ISO 8573-1:2010 [2:3:3] Note: It is sufficient if the pressure dew point is min. 10 K below the minimum ambient temperature.
- Nitrogen	Purity > 99.7%
• Maximum flow rate (process purging)	500 l/min
• Dew point	Benchmark: < -10 °C, condensation on the optics must be avoided
Blower purging	
• Maximum counter pressure	40 hPa
• Maximum flow rate	850 l/min
• Power consumption	370 W
• Degree of protection (fan)	IP54, protective barrier required for rain
Steam purging	
• Steam conditioning	Superheated
• Maximum temperature	240 °C
• Minimum pressure	> 4 000 hPa
• Maximum pressure	16 000 hPa, refers to a volume flow of approx. 1 100 l/min

LDS 6, hybrid and sensor cables	
General information	
Configuration hybrid cable	Two optical fibers and two twisted copper wires in one cable for 24 V DC. Single-mode fiber-optic cable prefabricated at both ends with E2000 angle plugs. Multimode fiber-optic cable prefabricated at both ends with SMA connectors. Cable is flame-retardant, very good resistance to oil, gasoline, acids and alkalis, protective jacket UV-resistant
Cable jacket	Oil-resistant polyurethane
Dimensions	• An external power supply must be additionally ordered for > 500 m • For installation in hazardous zones, non-intrinsically safe cables have to be installed spatially separated from intrinsically safe lines
• Diameter	< 8.5 mm
• Length	• Use in non-Ex and hazardous zone 2: Up to 700 m • Use in hazardous zone 0 and zone 1: Up to 250 m
Weight	75 kg/km
Maximum tensile force	200 N
Maximum lateral pressure	1 000 N/cm
Shock resistance	200 N/cm
Maximum tensile strength	500 N
Minimum bending radius	12 cm
Climatic conditions	
Ambient temperature	-40 ... +70 °C during transport, storage and operation -5 ... +50 °C during cable installation
Humidity	< 95% rel. humidity, above dew point (in operation and storage)

© Siemens AG 2024

Dimensional drawings

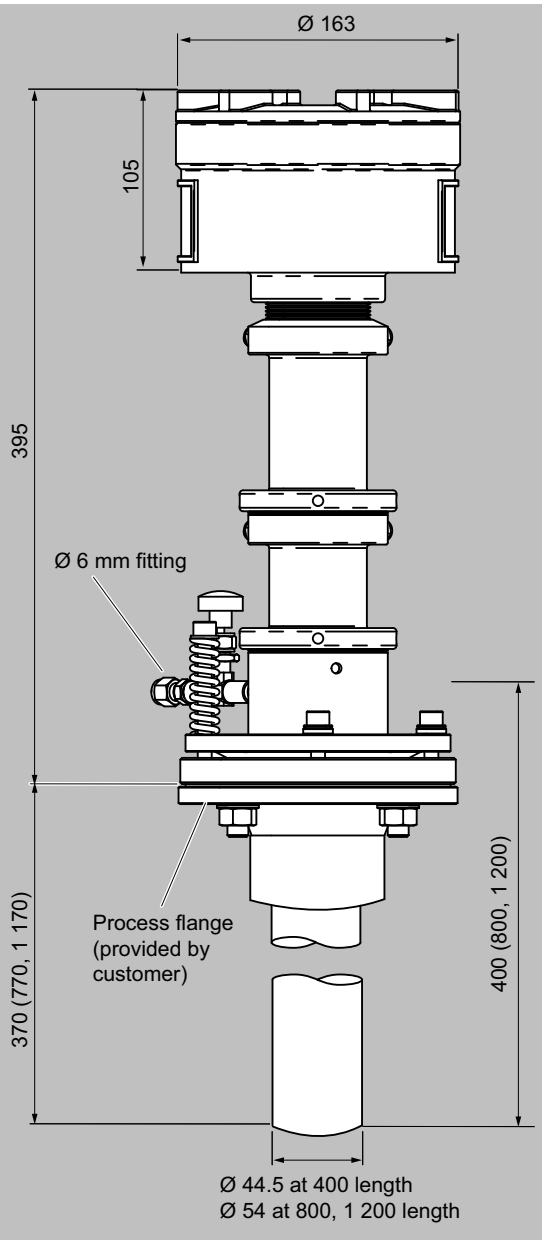

Optics enclosure CD 6, moderate purging (instrument air), version according to Article No. 7MB6122-**C1*-0***, dimensions in mm

© Siemens AG 2024

Dimensional drawings (continued)

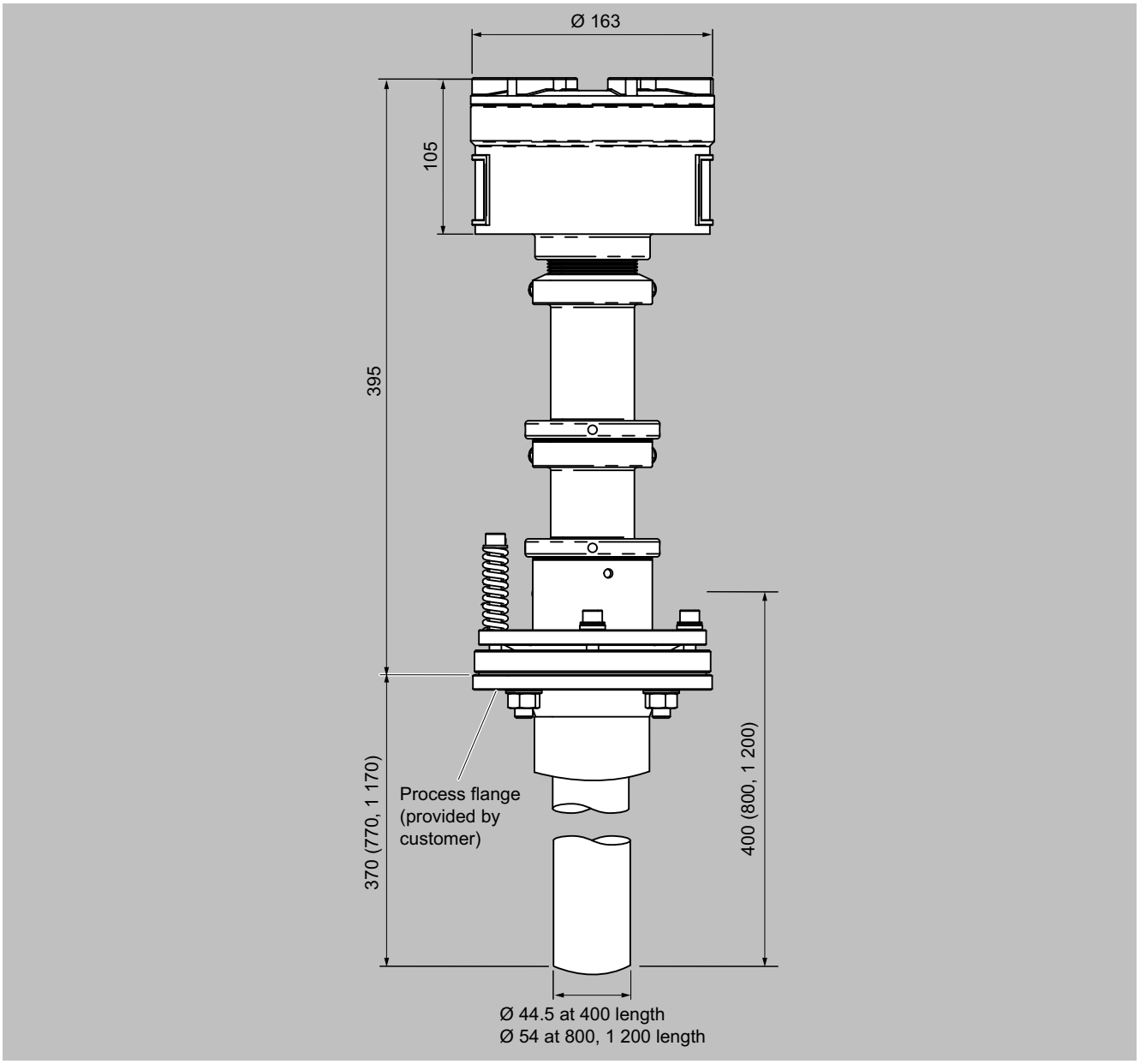

Optics enclosure CD 6, increased purging (instrument air), version according to Article No. 7MB6122-**E1*-0***, dimensions in mm

© Siemens AG 2024

Dimensional drawings (continued)

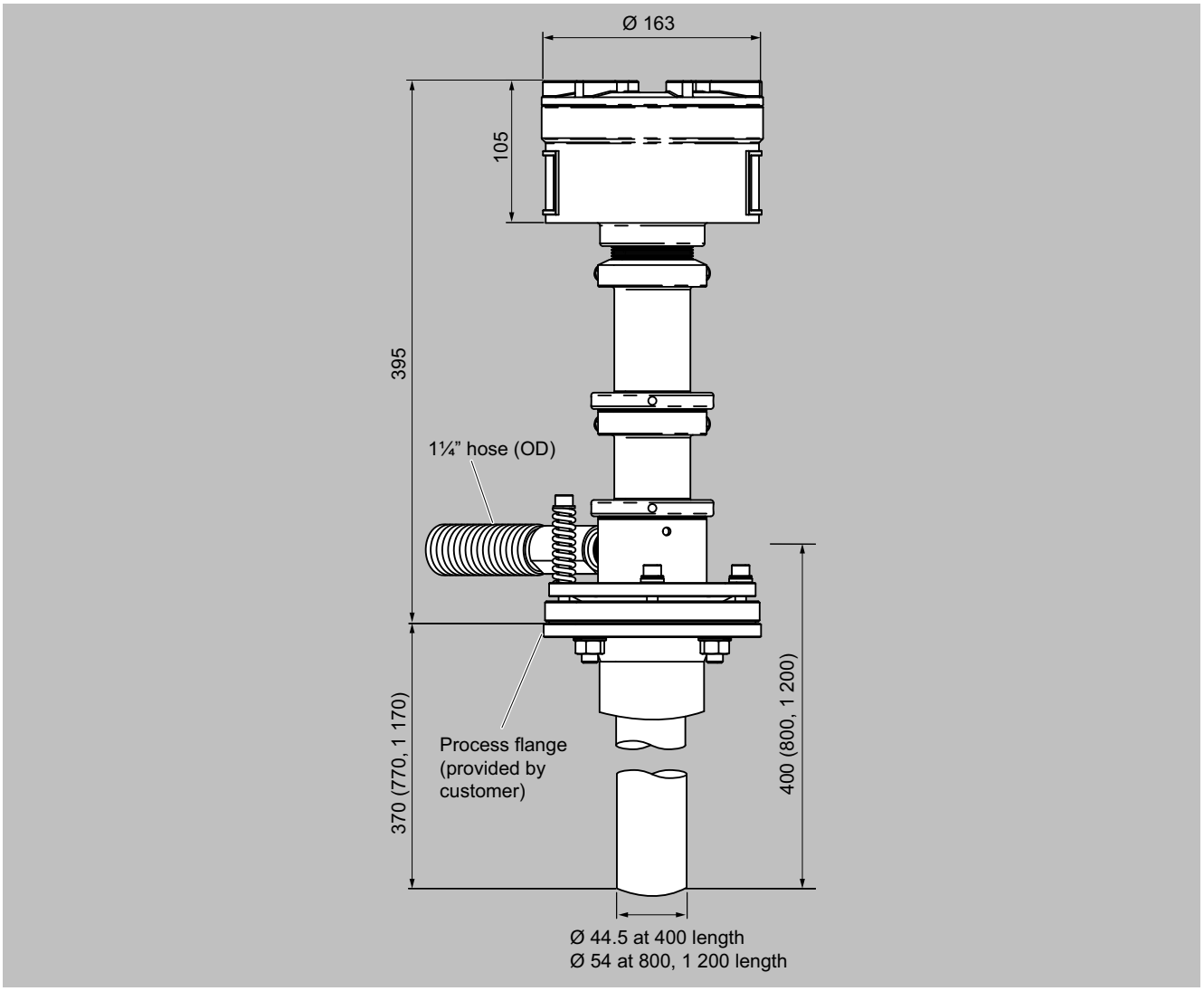

Optics enclosure CD 6, blower purging, version according to Article No. 7MB6122-**G1*-0***, dimensions in mm

© Siemens AG 2024

Dimensional drawings (continued)

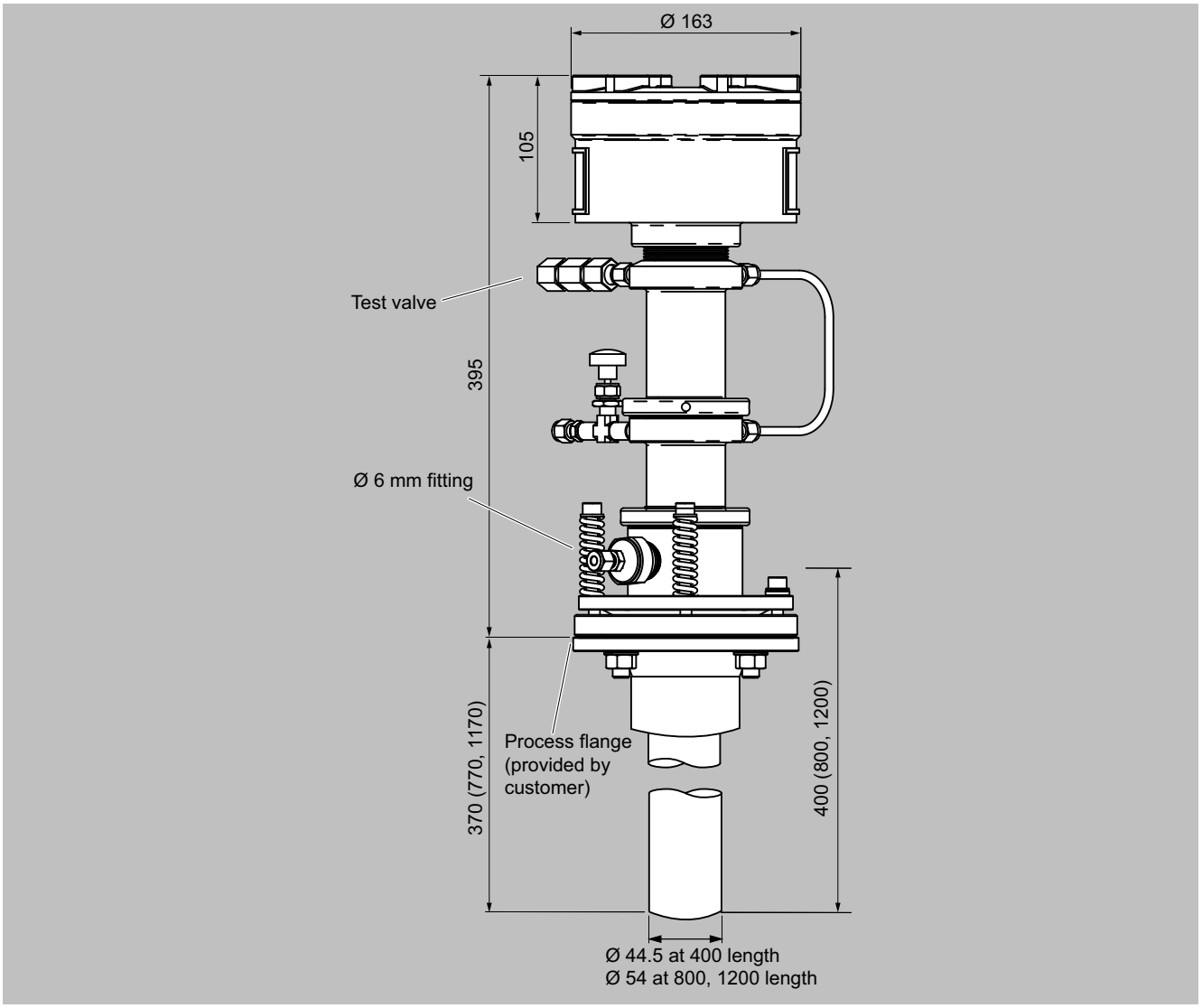

Optics enclosure CD 6, optics enclosure and process side purging, version according to Article No. 7MB6122-**H1*-0***-Z A27, dimensions in mm

© Siemens AG 2024

Dimensional drawings (continued)

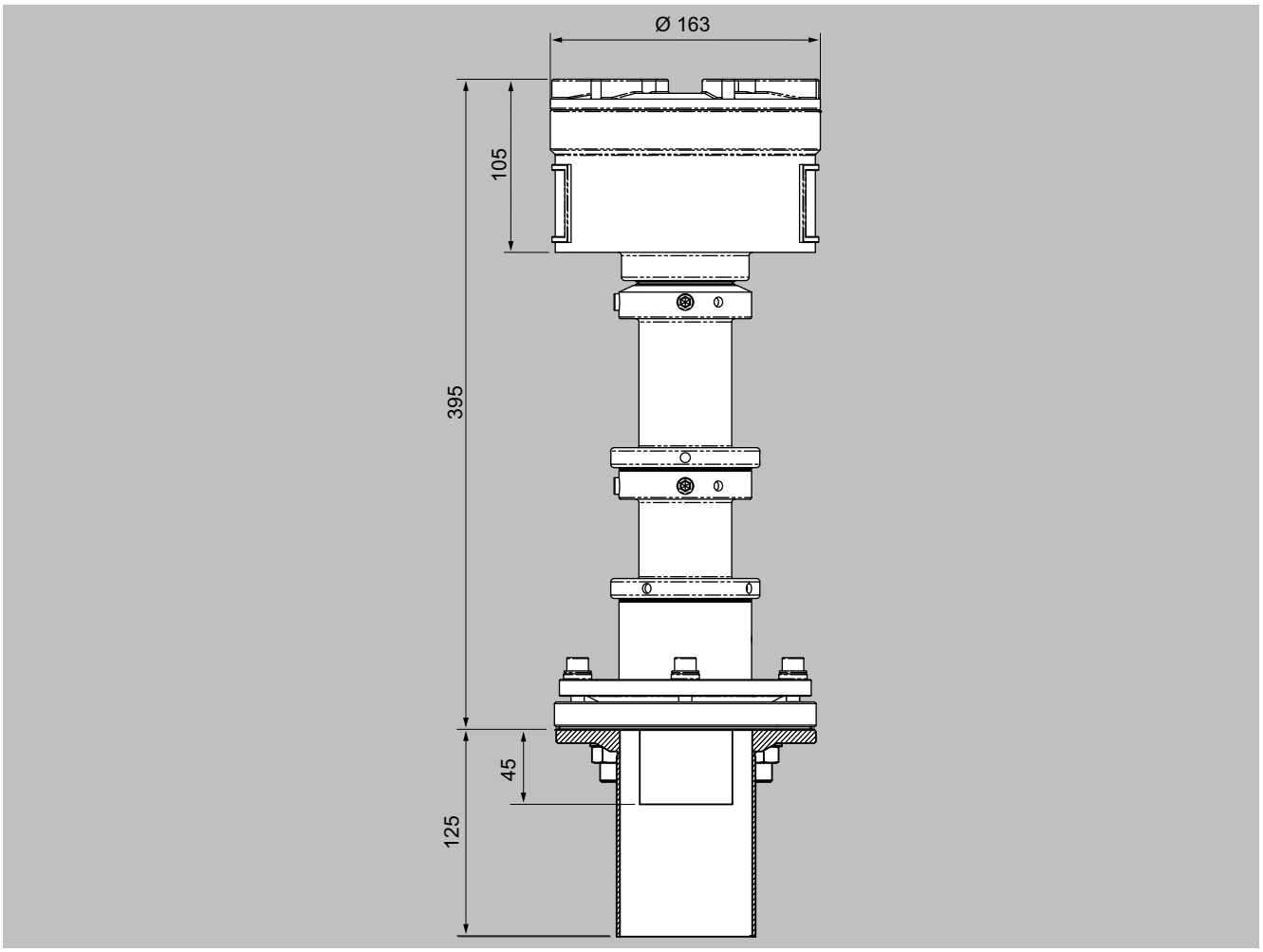

Optics enclosure CD 6, purged version according to Article No. 7MB6122-*WC14-2***, dimensions in mm

© Siemens AG 2024

Selection and ordering data

Description	2 years (unit)	5 years (unit)	Article No.
CD 6, window module, quartz	1	2	A5E00338487
CD 6, window module, engine test rig, no purging	1	2	A5E00338490
CD 6, flameproof window flange (1.4404/316L), DN 65/PN 6	1	2	A5E00534662
CD 6, flameproof window flange (1.4404/316L), DN 80/PN 16	1	2	A5E00534663
CD 6, flameproof window flange (1.4404/316L), ANSI 4"/150 lbs	1	2	A5E00534664
Gasket for CD 6 hybrid cable	1	2	A5E00853911
CD 6, sensor electronics FO InGaAs (version 2)	1	1	A5E01090409
CD 6, sensor electronics FO Ge, only HCl (version 2)	1	1	A5E01090413
CD 6, sensor electronics SW, only O_2	1	1	A5E00338533
CD 6, sensor electronics ATEX SW, only O_2	1	1	A5E00338563
CD 6, sensor electronics ATEX HCl	1	1	A5E00853896
CD 6, sensor electronics ATEX NH_3, CO, CO_2, HF, H_2O, low gain	1	1	A5E00338572
CD 6, purging tube 400 mm 1.4432/316L	1	2	A5E00253111
CD 6, purging tube 800 mm 1.4432/316L	1	2	A5E00253112
CD 6, purging tube 1200 mm 1.4432/316L	1	2	A5E00253113

More information

For demanding applications it is recommended to keep purging tubes, window modules and detector electronics in stock (quantities stated per measuring point, i.e. per pair of sensors).

For information on which parts are suitable for which devices (version 1 or version 2), please consult the Equipment Manual or the PIA Life Cycle Portal product selector www.pia-portal.automation.siemens.com or contact Siemens directly. In general, all new devices are compatible with spare parts of version 2.