SIEMENS

Ingenuity for life



APPLICATION GUIDE

Damper Actuator selection for HVAC systems

usa.siemens.com/openair

The right damper actuator for any HVAC application

Our OpenAir™ series provides more torque sizes to meet all of your needs. With over 40 years of innovating control actuators, Siemens is a recognized global leader in HVAC damper actuators. Energy-efficient, robust, flexible and reliable – save time and costs with OpenAir.

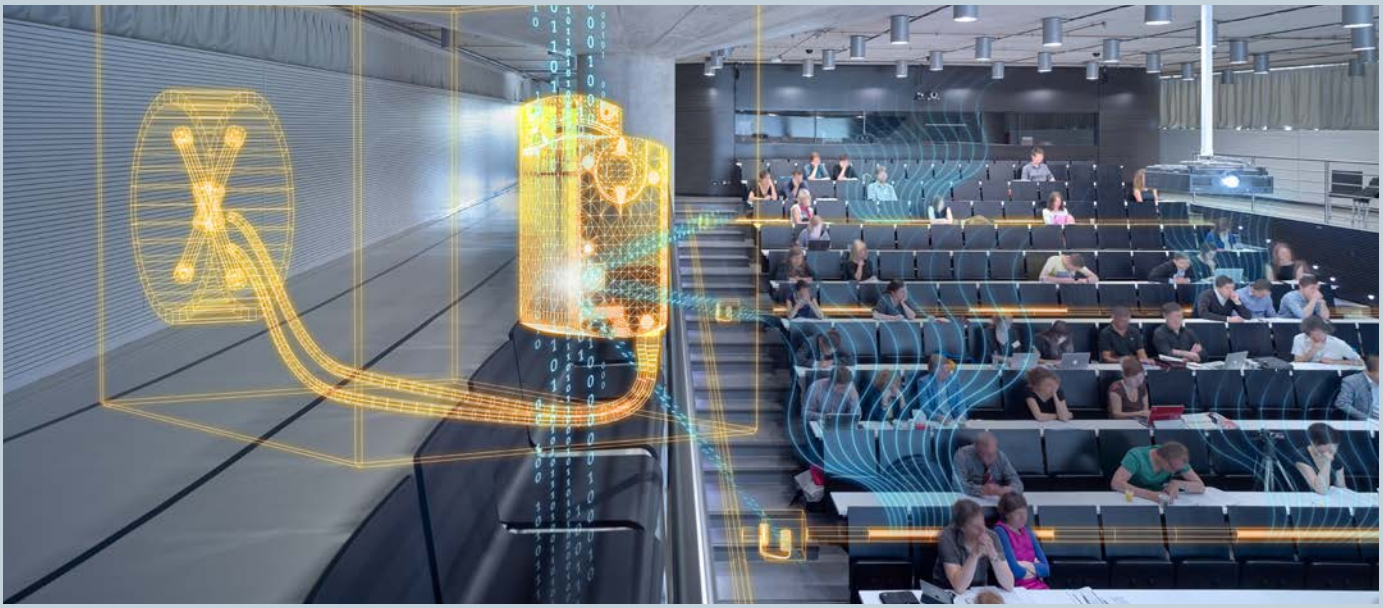

Table of Contents:

section 1

Why the right actuator matters

section 2

Selecting the right actuator

section 3

Common damper types and applications

section 1

Why the right actuator matters

	Over-sizing • Potential damage to your equipment
	Under-sizing • Equipment won't function properly • Potential damage to the equipment • Decreased energy efficiency
	Improper control signal • Overworking the equipment



The most common issues that come up when choosing the right damper actuator are under-sizing, over-sizing and improper usage signal. It is best to mitigate risk to ensure that the actuator and equipment functions properly.

Over-sizing risks include applying too much torque which can damage your equipment and costs more in the long run. There may have been an opportunity to use a slightly smaller actuator.

Under-sizing is a similar situation and this typically comes when the actual maximum torque that is required to move the equipment is not fully known. Sometimes tolerances stack up, or there is chattering or binding in the damper and the break-way torques rise higher than what the actuator can physically manage.

An example of under-sizing a damper actuator would be when you determine an actuator for use on a single mixed-air damper, when in reality the damper is linked to an additional return air unit, thus increasing the overall required torque. If the damper actuator is improperly sized and unable to open the return air and mixed air dampers to the proper position while under airflow, then the equipment won't function properly. This will drastically overload the equipment and use more energy than what is required since the chiller is working overtime to make up for the incorrect positioning of the dampers.

These are a few of the reasons why selecting the right actuator matters.

section 2

Selecting the right actuator

BEFORE GETTING STARTED:
To determine what actuator is needed for the application use a checklist like the one in the example shown to the right.

Actuator Selection Checklist	
1. Assess damper physical properties	☑
2. Check the specifications	
3. Understand application requirements	
4. Adjust for mounting or accessories	

After creating a checklist, follow this path:

Create Checklist — **Check Damper Label** — **Visit Manufacturer's Website** — **Multiply Damper Area by Torque Factor** — **Determine Torque Factor** — **Evaluate Torque Requirement Table** — **Required Torque**

#1: Assess damper physical properties

Assessing the damper's physical properties and checking the damper specification is critical in finding the torque needed. Understanding other application requirements and mounting needs comes with determining a more specific part number.

Most of the time, you can find out the damper's physical properties by simply looking at it. You can see whether the damper is an opposed blade, or parallel blade damper; or if there are seals on it and so forth. However, if the damper is already installed and you can't see inside, then the easiest way to determine the damper's physical properties is by looking for the damper product label. A damper product label will have most of the information that is needed. Sometimes, the label may also include the required torque, or a specific actuator listed.

Finding the label and the damper part number:

If the label and the damper part number can't be found, then visit the specific manufacturer's website. Search the damper part number, and link to a torque requirement table that shows a torque factor.

Information that can be found on a label:

- Square Footage
- Required Torque
- Max Pressure Ratings
- Damper Part Number
- Max Air Velocity or CFM
- Temp. Ratings
- Seal Type or Material
- Blade Length
- Blade Action

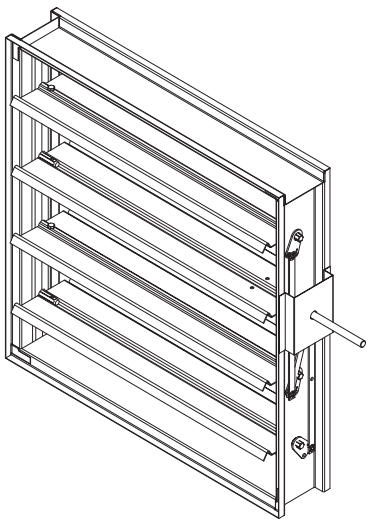

#2: Check the specifications

By knowing the ratings and specifications of the damper, you'll be able to find the torque vector needed. Siemens torque vector table is as follows:

Actuator Selection Checklist	
1. Assess damper physical properties	
2. Check the specifications	☑
3. Understand application requirements	
4. Adjust for mounting or accessories	

Torque Vector Table

Air Velocity (Ft/Min)	Torque Factor (Lb. In/Ft²)		
	< 1200	< 2500	< 3000
Damper Blade Style			
Opposed Blade No Seals	3	4.5	6
Opposed Blade with Seals	6	7.5	10
Parallel Blade No Seals	4	6	8
Parallel Blade with Seals	8.5	10.5	14

EXAMPLE:

In this example, the damper physical properties are 36 inches by 36 inches with opposed blade damper and seals and has a maximum air velocity of 2,000 ft/min. The next step is to find the required torque. To do that, multiply the torque factor by the square footage of the damper.

Torque Requirements

	Opposed Blade Dampers with		Parallel Blade Dampers with	
	No Seals	Low Leakage Seals	No Seals	Low Leakage Seals
Maximum Pressures of 2 in. wg or Maximum Velocities of 1500 fpm	3 in-lb/ft²	5 in-lb/ft²	4 in-lb/ft²	7 in-lb/ft²
Maximum Pressures of 3 in. wg or Maximum Velocities of 2500 fpm	4.5 in-lb/ft²	7.5 in-lb/ft²	6 in-lb/ft²	10.5 in-lb/ft²
Maximum Pressures of 4 in. wg or Maximum Velocities of 3000 fpm	6 in-lb/ft²	10 in-lb/ft²	8 in-lb/ft²	14 in-lb/ft²

Torque Formula:

$$\textbf{\textit{Required Torque (LbIn)}} = \textit{Damper Area} * \textit{Torque Factor}$$

$$\textbf{\textit{Required Torque (LbIn)}} = \frac{\textit{Damper Width (In)} * \textit{Damper Height (In)}}{144\left(\frac{In^2}{Ft^2}\right)} * \textit{Torque Factor}\left(\frac{LbIn}{Ft^2}\right)$$

Physical Properties: Know the Measurements

Finding these four data points are crucial to understanding what torque is required for the application, so that the right actuator is chosen.

#1 Evaluate the total area of the damper

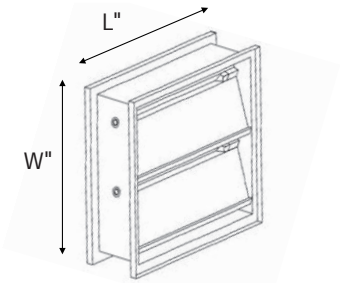

L" x W" = (Total sq. inches / 144) = Total sq. Ft.

First, find the square footage of your damper. Check if the damper section is longer than 96". If it is, then it must have two total actuators on the shaft - one on either side of the damper. This eliminates any deflection or binding that may happen when operating a damper of that length.

#2 Determine blade configuration

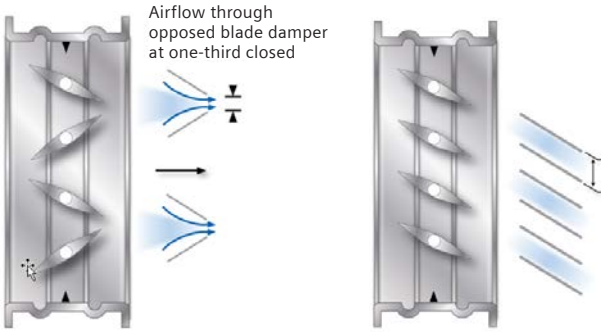

Opposed Blade

Parallel Blade

Next, determine the blade configuration or blade action. This is critical since the torque required to operate these dampers differs. This is due to the airflow passing between the damper blades while rotating open or closed. Depending on the configuration and the direction of the airflow, there may be an assistance provided during a part of the actuator stroke.

#3 Type of damper seal – blade or edge?

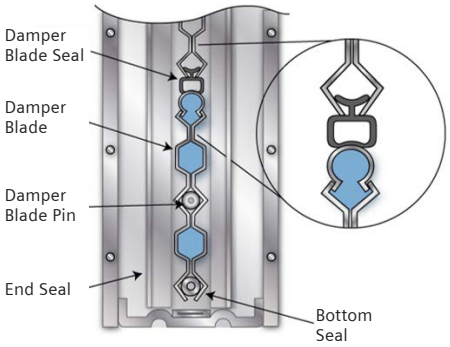

While looking at the blade configuration, it will be easy to determine if there are edge, blade seals or both on the damper. This typically depends on the leakage rating of the dampers, and what the supplier has specified.

If seals are located on the damper, the torque value would increase compared to an assembly that had no seals. This is due to the seals needing to be properly engaged at the start or end of the actuator stroke to make sure the damper assembly meets the leakage specification.

#4 Air velocity, static pressure or designed CFM to be used in the system?

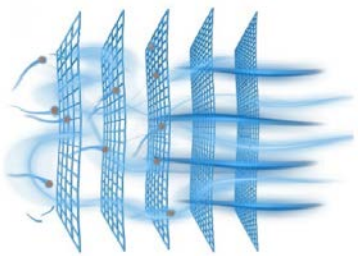

The last major point is knowing the maximum air velocity, maximum static pressure or the maximum designed CFM that this damper will be subjected to. Knowing this is a critical piece of information since the manufacturer's torque tables, along with the Siemens table, has varying torque factors based on the max air velocity or pressure differences.

How to find the damper torque

Step 1:
Go to the manufacturer's website and search the damper part number. In some cases, a QR code will be located on the damper itself. Scan the QR code with your phone's camera and it will direct you to the specific damper's sections.

Step 2:
Once you're on the manufacturer's website, find the Torque Requirement Table containing the torque factor information needed.

Step 3:
Using your check list of information and the chart provided, you find that the torque factor is 10.5 in-lb./ft squared. Now, multiply that torque factor by square feet, check all the units and find the torque that is needed for this application which is just under 94.5 lb.-in.

Torque Vector Table

Air Velocity (Ft/Min)	Torque Factor (Lb. In/Ft²)		
	< 1200	< 2500	< 3000
Damper Blade Style			
Opposed Blade No Seals	3	4.5	6
Opposed Blade with Seals	6	7.5	10
Parallel Blade No Seals	4	6	8
Parallel Blade with Seals	8.5	10.5	14

EXAMPLE:
To find the required torque for an outside air damper, inspect the damper. In this example, it has a manufacturer label on it with product specifications that provides all the critical information needed on your check list.

Torque Requirements

	Opposed Blade Dampers with		Parallel Blade Dampers with	
	No Seals	Low Leakage Seals	No Seals	Low Leakage Seals
Maximum Pressures of 2 in. wg or Maximum Velocities of 1500 fpm	3 in-lb/ft²	5 in-lb/ft²	4 in-lb/ft²	7 in-lb/ft²
Maximum Pressures of 3 in. wg or Maximum Velocities of 2500 fpm	4.5 in-lb/ft²	7.5 in-lb/ft²	6 in-lb/ft²	10.5 in-lb/ft²
Maximum Pressures of 4 in. wg or Maximum Velocities of 3000 fpm	6 in-lb/ft²	10 in-lb/ft²	8 in-lb/ft²	14 in-lb/ft²

Torque Formula:

$$\textbf{Damper Area (Ft}^2\textbf{)} = \frac{36\ (In) * 36\ (in)}{144\left(\frac{In^2}{Ft^2}\right)} = \frac{1{,}296\ (In^2)}{144\left(\frac{In^2}{Ft^2}\right)} = \textbf{9 Ft}^2$$

$$\textbf{Torque Factor}\left(\frac{LbIn}{Ft^2}\right) = 10.5\left(\frac{LbIn}{Ft^2}\right)$$

$$\textbf{Required Torque (LbIn)} = \text{Damper Area } (Ft^2) * \text{Torque Factor} * \text{Torque Factor}\left(\frac{LbIn}{Ft^2}\right)$$

$$9 * 10.5 = \textbf{94.5 LbIn}$$

#3: Understand application requirements

The third step is understanding the application requirements. Choose which actuator fail position is the best fit for the project and decide what voltage and control signal is needed.

Actuator Selection Checklist	
1. Assess damper physical properties	
2. Check the specifications	
3. Understand application requirements	☑
4. Adjust for mounting or accessories	



Spring Return vs. Non-Spring Return

Selecting a fail position

Understanding the actuator's fail position (non-spring return vs. spring return) is important. If the power supply is lost, the actuator will either fail in its current position, or the mechanical spring takes over and forces the actuator back to its original starting position.

In certain cases when power is lost and the application requires protection to the internal components, the damper should be forced to its original starting position. This would be a use case for fail-safe spring return actuators.

A situation where a fail-in-place non-spring return actuator would be used is in a damper near a fan. If power is lost, make sure that damper is forced back to the fully closed position, so an actuator that has fail-safe can protect the internal components.

What's the voltage and control signal?

Consider the appropriate voltage needed along with choosing the correct control signal. Choosing an incorrect control signal could lead to improper use of equipment which leads to lost dollars.

24 VAC/DC	DC
120 VAC 230 VAC	AC

2-Position

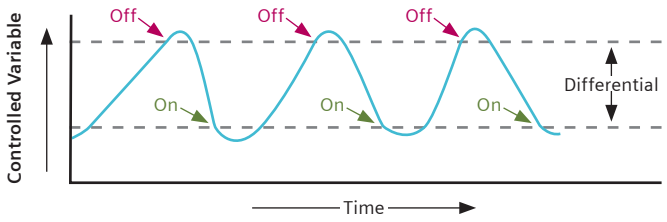

Floating

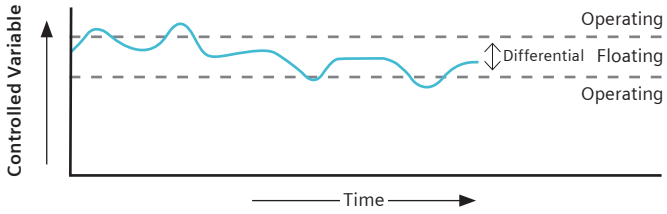

Modulating

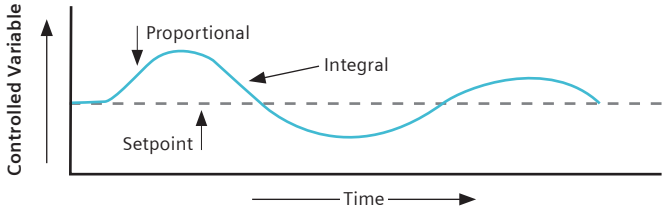

#4 Adjust for mountings or accessories

The final two options that are available for the damper actuators are dual-auxiliary switches and specific mounting connections.

Auxiliary switches help verify the actuator positioning, since a contact can be used to operate other low voltage devices at 5% and 85% of the actuator's rotation.

If there are any difficulties in mounting the actuator to the shaft, Siemens has a variety of mounting accessories such as foot mounts, tandem mounts, linkage kits and even rotary to linear kits that can be used for OpenAir actuators.

For installations requiring a bit more protection from the elements, consider adding a weather shield.

Actuator Selection Checklist	
1. Assess damper physical properties	
2. Check the specifications	
3. Understand application requirements	
4. Adjust for mounting or accessories	☑

Putting it all together

Now that all the steps have been covered to select the right actuator, let's review the original example. The outside air damper required 95-inch pounds of torque to properly open. Since it is an outside air application, a fail-safe spring return actuator is required. 24Vac is common in this application, along with a modulating 2-10V signal, with dual auxiliary switches built in to ensure the fan starts and stops depending on the actuator's rotation. In this scenario, the damper shaft is easily accessible, and no specific accessories are needed.

Taking all that information and looking through the Siemens brochure, online HIT tool, or catalog, it is decided that a Siemens GCA156.1P actuator is the perfect fit.

Outside Air Damper Example Recap:

- Torque Requirement = 94.5 Lb.-In
- Fail-Safe is needed = Spring Return
- Voltage = 24Vac
- Control Signal = Modulating 2-10V
- Aux. Switches = Yes
- No specific accessories needed



GCA156.1P

In the end, following these steps in this checklist will save you time, money and headaches in the future.

Actuator Selection Checklist
✓ Assess damper physical properties
✓ Check the specifications
✓ Understand application requirements
✓ Adjust for mounting or accessories

section 3

Common actuator types and applications

Find the right damper actuator for any HVAC application. Siemens has a range that meets all your needs. Energy-efficient, simple, flexible and reliable: your benefits are at the heart of the entire damper actuator range, from smooth installation and rapid commissioning to operation that is both efficient and convenient. Save time and costs with OpenAir.



Fast-Acting

Best Suited Control:
On/Off, Floating or Modulating

Recommended Uses:
- Fume Hoods
- Supply & Exhaust Air Terminals

Advantages:
- 2-Second timing
- Compact design
- High rated life-cycle performance



Fire and Smoke

Best Suited Control:
On/Off or 2 PT

Recommended Uses:
- Fire Dampers, Smoke Dampers, Combination Fire and Smoke Dampers

Advantages:
- Built-in quick connect capability to electronic fusible link
- High temperature rating
- Larger torque offering
- Relatively low cost



Non-Spring Return

Best Suited Control:
On/Off, Floating or Modulating

Recommended Uses:
- Constant or Variable Air Volume
- Terminal Units
- Bypass Dampers
- Makeup Air Dampers
- Multi-zone Mixing Boxes

Advantages:
- Relatively low cost
- Compact design
- Low power consumption
- High rated life-cycle performance



Spring Return

Best Suited Control:
On/Off, Floating or Modulating

Recommended Uses:
- Terminal Units
- Rooftop Units (RTU)
- Face and Bypass Dampers
- Outside Air Dampers
- Unit Ventilators

Advantages:
- Relatively low cost
- Compact design
- Low power consumption
- High rated life-cycle performance

OpenAir Electronic Damper Actuators

More torque, greater energy efficiency, and long-lasting reliability gives you an ideal solution for all your HVAC equipment needs.

40+ Years
Innovating control actuators

1.5+ Million
OpenAir reposition operations for longer life

60+ Thousand
Full strokes at rated torque and temperature

100%
Factory tested

25%
Lower power consumption

20%
More torque than the competition

Rely on Siemens for the best possible system performance.
The right HVAC device matters to make your perfect place a reality.

Siemens Industry, Inc.
Building Products
1000 Deerfield Parkway
Buffalo Grove, IL 60089-4513
USA
Tel. 847-215-1000

Siemens Canada Limited Headquarters
1577 North Service Road East
Oakville, ON L6H 0H6
Canada
Tel. 905-465-8000

All rights reserved. Printed in USA 153-SBT-2704 (07/20)
©2020 Siemens Industry, Inc.