SIEMENS

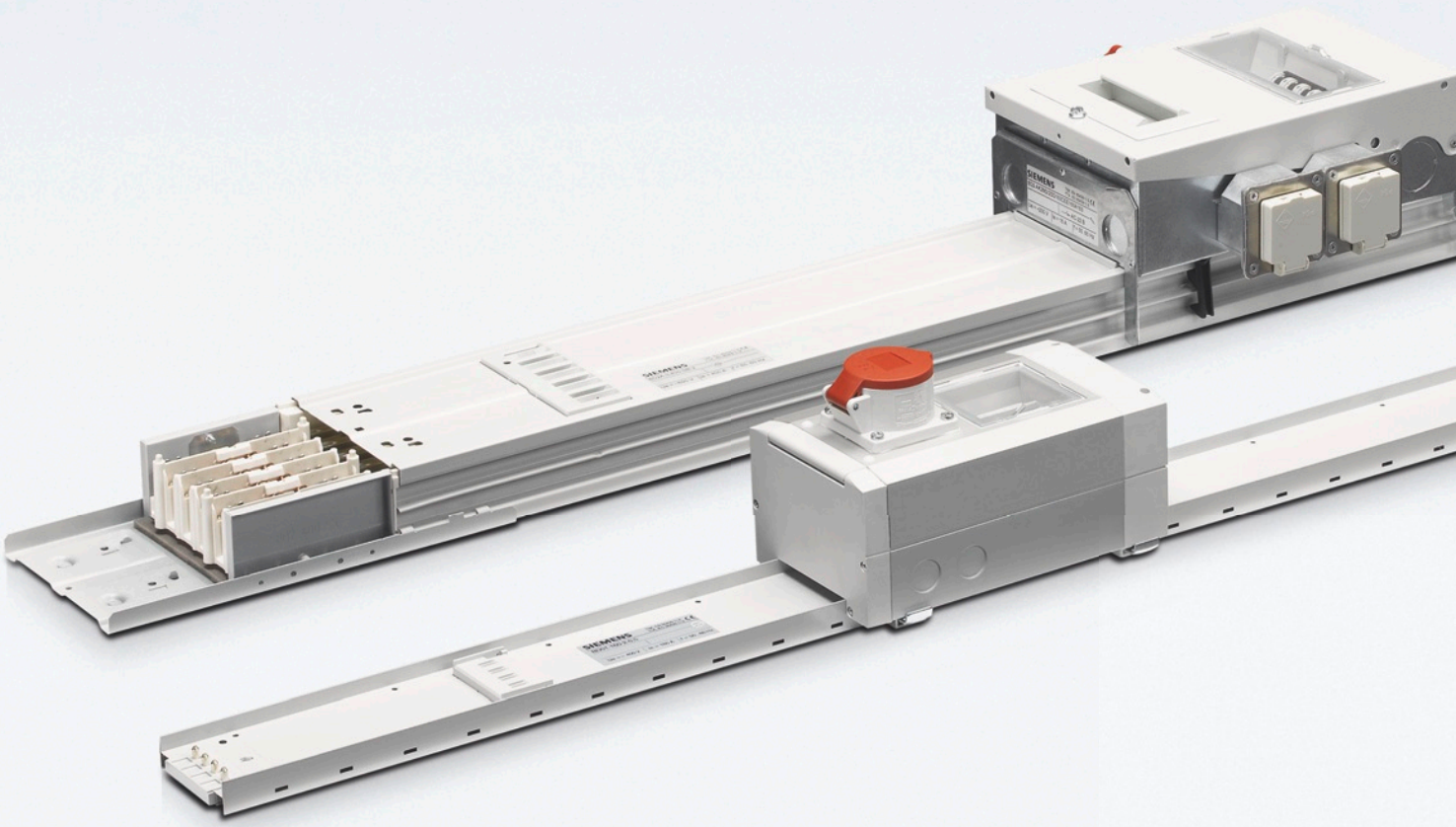

SIVACON 8PS Busbar Trunking Systems

BD01, BD2 up to 1250 A

Catalog LV 70

Edition 2019

siemens.com/busbar

Related catalogs

Low-Voltage Power Distribution and Electrical Installation Technology LV 10
SENTRON • SIVACON • ALPHA
Protection, Switching, Measuring and Monitoring Devices, Switchboards and Distribution Systems

PDF (E86060-K8280-A101-A8-7600)
Print (E86060-K8280-A101-A6-7600)

Air circuit breakers • MCCBs • MCBs • Residual current protective devices / AFDDs • Fuse systems • Overvoltage protection devices • Switch disconnectors • Switching devices • Transformers, power supply units and socket outlets • Busbar systems • Measuring devices and power monitoring • Monitoring devices • Software • Switchboards • Busbar trunking systems • System cubicles, system lighting and system air-conditioning • Distribution boards / Power distribution boards • Molded-plastic distribution systems • 8WH2 spring-loaded terminals

SIVACON 8PS LV 70
Busbar Trunking Systems
BD01, BD2 up to 1250 A

E86060-K1870-A101-A9-7600

Busbar Trunking Systems, Overview •
BD 01 System – 40 A ... 160 A • BD2 System – 160 A ... 1250 A

SIVACON 8PS LV 70P
Busbar Trunking Systems
BD01, BD2 up to 1250 A
Price List, only available in German

PDF (E86060-P1870-A101-B9)

Busbar Trunking Systems, Overview •
BD 01 System – 40 A ... 160 A • BD2 System – 160 A ... 1250 A

ALPHA FIX LV 52
Terminal Blocks

PDF (E86060-K1852-A101-A5-7600)
Print (E86060-K1852-A101-A3-7600)

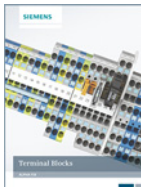

iPo plug-in terminals • iPo installation terminals • Spring-loaded terminals • Combination plug-in terminals • Insulation displacement terminals • Screw terminals • Accessories for terminal blocks

Products for Automation and Drives CA 01
Interactive Catalog
Download

www.siemens.com/automation/ca01

All products of automation and drives technology and of low-voltage power distribution and electrical installation technology

Industry Mall
Information and Ordering Platform
on the Internet:

www.siemens.com/industrymall

All products of automation and drives technology and of low-voltage power distribution and electrical installation technology

Trademarks

All product designations may be registered trademarks or product names of Siemens AG or other supplying companies. Third parties using these trademarks or product names for their own purposes may infringe upon the rights of the trademark owners. Further information about low-voltage power distribution and electrical installation technology is available on the Internet at:

www.siemens.com/lowvoltage

Technical Support

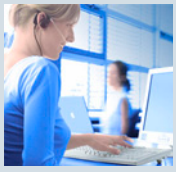

Expert advice on technical questions with a wide range of demand-optimized services for all our products and systems.

www.siemens.com/lowvoltage/support-request

SIVACON 8PS Busbar Trunking Systems

BD01, BD2 up to 1250 A

Totally Integrated Power – SIVACON 8PS

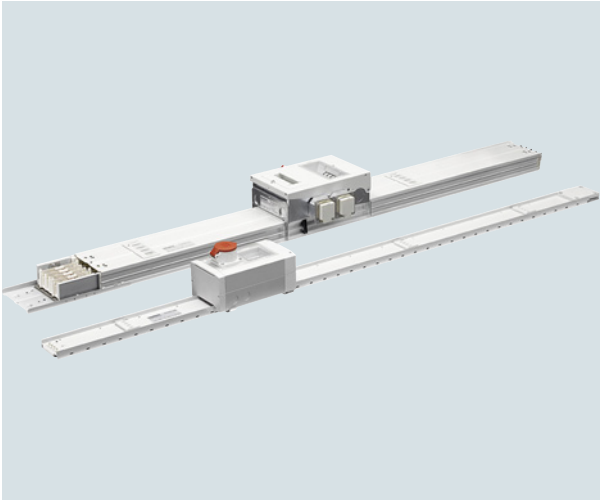

Catalog LV 70 · 2019

Supersedes:
Catalog LV 70 · 2015
Price List LV 70 P · 2018

Refer to the Industry Mall for current updates of this catalog:
www.siemens.com/industrymall

The products contained in this catalog can also be found in the Interactive Catalog CA 01.

Please check the instructions for the CA 01 Online Installer on www.siemens.com/automation/ca01
or contact your local Siemens branch.

The products and systems listed in this catalog are manufactured and distributed using a certified management system (according to ISO 9001, ISO 14001 and BS OHSAS 18001).

Systems and solutions for safe and reliable power distribution

In an era of high population growth, increasing urbanization, technological change and cost pressures, the sustainable management of limited resources is an important issue. Rising energy demands must today be reconciled with increasing environmental awareness and a desire for reduction in CO2 emissions. At the same time, requirements concerning reliability, personal safety and productivity are increasing.

Siemens systems and solutions for low-voltage and medium-voltage power distribution support reliable and cost-efficient energy supply for the future, and provide answers to the challenges of tomorrow.

Safe, reliable, innovative, and future-oriented

Innovative systems and solutions for every application
International development teams and customer-focused manufacturing centers incorporate country-specific requirements into our research and development activities. Whether for primary or secondary power distribution, or for green isolated grids, whether for outdoor or indoor applications – our systems and solutions offer the right answer.

Standards for high availability and optimal personal protection
Our high-quality systems and solutions are developed according to relevant international standards. Thus, they offer a very high degree of personal and operating safety.

Sustainability and investment protection
In the area of grid stability, power generation on the basis of renewable energies entails new challenges. The durable systems and solutions from Siemens enable you to achieve your economic and environmental objectives. Low-voltage and medium-voltage switchgear, energy storage, and busbar trunking systems simplify the integration of renewable energy sources.

Their integration in existing control or automation systems as well as in smart grids can be achieved using a variety of protocols (such as IEC 61850, PROFINET, MODBUS, DNP).

Reliable local support
Our local experts are there for you around the world, helping you develop solutions for your energy supply, and providing you with specific expertise on project management and financial services in your projects. Important aspects of safety, logistics and environmental protection are considered. We advise you as an end customer or planner. Especially in the planning phase, our experts from Totally Integrated Power (TIP) will provide you with professional consulting, software tools, specification texts, and planning manuals.

More information
www.siemens.com/mediumvoltage

Your advantages at a glance

- A full range of systems and solutions – from low to medium voltage
- High cost-efficiency through innovative, durable, and future-oriented products
- High switchgear availability and personal safety
- Contribution to increasing energy efficiency
- Reliable and competent local support – from planning to operation

For your application, we provide high-quality and standard-conforming systems and solutions that ensure maximum availability and personal safety while contributing significantly to a sustainable energy supply.

Tailored systems and solutions for utilities, industry and infrastructure

Maintaining the balance between economy and ecology with continuing globalization – these are challenges that the majority of industries face today. Flexibility is becoming more important, development cycles are becoming shorter, and time-to-market is becoming crucial.

Your business success is based on a reliable and flexible energy supply. This results in high demands on suppliers of electrical systems and solutions.

Whether in the supply of cities and infrastructure, or for industrial plants – with Siemens systems and solutions you will always have the right solution for a reliable and cost-efficient energy supply – whether you are operating regionally or globally.

Regional customers

- Our maintenance-free and compact gas-insulated switchgear support utilities in building more cost-efficient and reliable grids, as well as in integrating into smart grids.
- For wind farms and turbines, our busbar trunking systems and medium-voltage switchgear are used, ensuring a reliable connection to the power grid. Energy storage solutions enable the integration of an increasing number of wind turbines into distribution grids, without requiring that such grids be expanded immediately.
- Modern infrastructure, such as hospitals, office buildings and airports, must meet stringent requirements in terms of safety, low environmental impact, and integration of renewable energy. Our low- and medium-voltage switchgear and busbar trunking systems ensure a high level of safety, flexibility and functionality.

Globally operating customers and EPCs

- In the oil and gas industry or in mining, for example, our prefabricated solution in a container features efficiency, safety and reliability for supplying power under extremely difficult environmental conditions. It gives you an efficient and economical alternative to conventionally installed medium-voltage substations.
- Chemical production must be supplied with power around-the-clock on a cost-efficient yet extremely flexible basis. With our switchgear, we offer you an efficient and reliable energy supply.
- In the automotive industry and in data centers, busbar trunking systems offer a stable electrical infrastructure while providing flexibility for the connection of loads in case of subsequent modifications or expansions.
- In the metal industry or in the pulp and paper industry – i.e. wherever large amounts of energy are required on demand and peak loads need to be reduced – our energy storage system offers the right solution.

Innovative systems for utilities

System examples:
- 8DA/8DB
- NXPLUS C
- 8DJH
- NXAIR

Overhead line applications

System examples:
- Fusesaver
- 3AD
- 3AF
- SDV6/7

Fit for extreme conditions in the oil and gas industry

System examples:
- NXPLUS C
- NXAIR
- E-House

Reliability under harsh conditions in mining

System examples:
- 8DA
- NXPLUS C
- NXAIR

Cost-efficient power distribution for chemical plants

System examples:
- NXPLUS C
- NXAIR
- SIVACON S8

Reliable and flexible solutions for the automotive industry

System examples:
- NXPLUS C
- NXAIR
- SIVACON S8
- SIVACON 8PS
- SIESTORAGE

Flexible systems for wind energy systems

System examples:
- NXPLUS C Wind
- 8DJH
- SIVACON 8PS System LDM

Integrated solutions for cities and infrastructure

System examples:
- 8DJH
- SIVACON S8
- SIVACON 8PS

Reliability in the power supply of data centers

System examples:
- 8DJH
- NXAIR
- SIVACON S8
- SIVACON 8PS

Strong performance for the metal industry

System examples:
- NXPLUS C
- NXAIR
- SIESTORAGE

High availability in the pulp and paper industry

System examples:
- NXPLUS C
- NXAIR
- SIVACON S8
- SIESTORAGE

High-quality energy supply for the food and beverage industry

System examples:
- 8DJH
- NXAIR
- SIVACON S8
- SIVACON 8PS

Notes

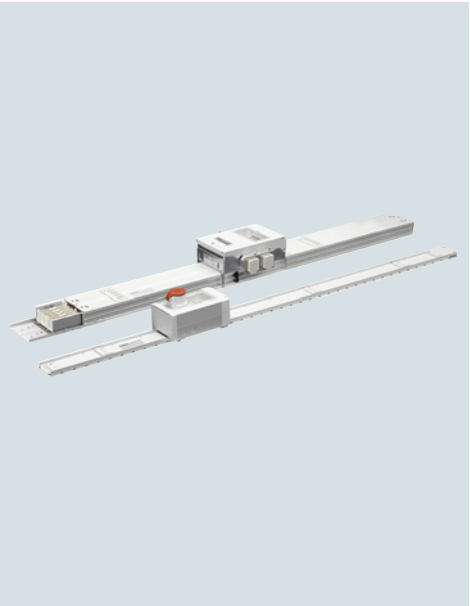

For further technical product information:

Siemens Industry Online Support:
www.siemens.com/lowvoltage/product-support

→ Product list:
Technical specifications

→ Entry list:
Certificates / Characteristics / Download / FAQ / Manuals / Operating instructions / Updates

SIVACON 8PS busbar trunking systems in use

Overview

Busbar trunking systems in the low-voltage range guarantee the reliable transmission and distribution of energy from the transformer through the main distribution board and sub-distribution board to the load. Siemens offers a complete range of high-performance systems:

- BD01 system for 40 A to 160 A
- BD2 system for 160 A to 1250 A
- LR system for 400 A to 6300 A
- LD system for 1100 A to 5000 A
- LI system for 800 A to 6300 A

SIVACON 8PS busbar trunking systems provide the highest reliability thanks to tested low-voltage switchgear and control-gear assemblies. Design-verified according to IEC 61439-1/-6. Metal enclosures lend the systems high short-circuit strength and low fire load for greater safety for persons and buildings.

Other advantages:

- Well arranged network structure
- Easy retrofitting when loads change
- Low operating costs thanks to high availability
- Easy planning and mounting

With the communication-capable SIVACON 8PS busbar trunking systems, power distribution can be combined with building automation

Power for loads with no fixed location

The BD01 system is ideal for power distribution (up to 160 A) in craft and trade. The busbars can be easily and quickly connected. An anti-rotation feature (prevents uncorrect fitting on the tap off point) guarantees easy conversion. Other advantages: Minimum stock keeping and straightforward planning thanks to one standard size for five different current ratings.

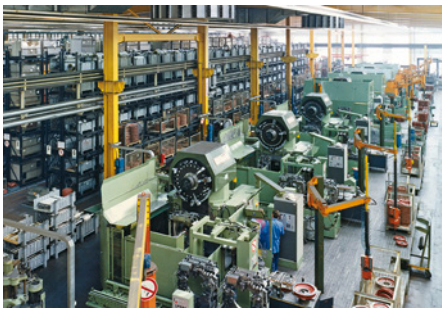

The BD01 system is quickly mounted and ideally suited for use in craft and trade.

The universal solution for high power levels in a small space

The BD2 system (up to 1250 A) supplies energy to medium-size loads in buildings and all sectors of industry. Pre-assembled tap-off units with the most diverse equipment enable universal use. With only two standard sizes for all current ratings, stock keeping and planning are greatly facilitated.

High availability in production

The ventilated LD system (up to 5000 A) transmits electricity to production facilities with a high demand for power, e.g. in the automobile industry. A separate PE busbar enables the assured response of the protection device over long conducting paths. The high short-circuit strength permits protection by medium-voltage circuit breakers for the transmission of power between the transformer and the main infeed. Tap-off units up to 1250 A can be plugged in without causing any problems.

The ideal system for production lines needing a great deal of power is the LD system up to 5000 A.

Flexible power supply for multi-floor buildings

The LI sandwich system (up to 6300 A) is used wherever large amounts of power have to be transmitted independently of position. Be it for radio broadcasting stations, data centers or Internet providers – conductor configurations with an isolated PE conductor and double neutral conductor cross-section guarantee an interference-free power supply. Tap-off units up to 1250 A are available as standard.

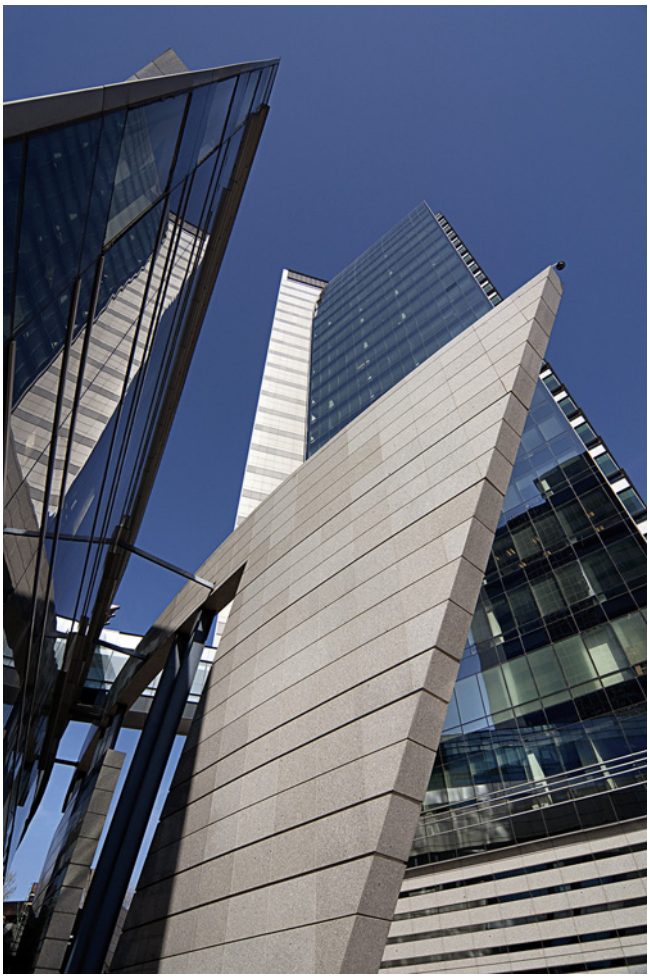

The LI busbar trunking system is the perfect equipment for multi-floor buildings where large quantities of power need to be transported, uninfluenced by the mounting position of the system.

Safe power transmission for petrochemicals

The encapsulated LR system (up to 6300 A) is extremely resistant to external interference thanks to its high degree of protection. It guarantees the safe transmission of power in severe weather as well as under harsh industrial conditions with dust, dirt and aggressive media.

Typical applications are the petrochemical industry, refuse incineration plants and power stations.

In the petrochemical industry with its harsh ambient conditions, it is the LR system that provides for fault-free power transmission.

Comprehensive support

Overview

SIVACON 8PS on the Internet

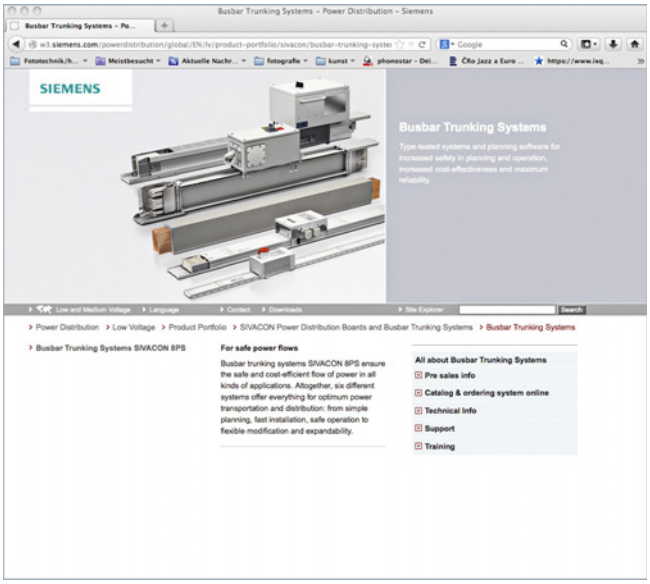

Visit us on the Internet. You can obtain additional information on our SIVACON 8PS busbar trunking systems, for example the SIVACON 8PS overview brochure, along with links to technical materials at
www.siemens.com/busbar

Tender specification texts

For your support, we offer you a comprehensive range of specification texts:
www.siemens.com/specifications

Reliable local support

Our local experts are there for you around the world, helping you develop solutions for your energy supply, and providing you with specific expertise on project management and financial services. Important aspects such as safety, logistics and environmental protection are considered.

We will be glad to advise you as an end user or project planner. Especially in the planning phase, our experts from Totally Integrated Power (TIP) will provide you with professional consulting, software tools, specification texts, and planning manuals.

SIVACON 8PS busbar trunking systems - The intelligent alternative to cables - BIM

BIM data for electrical planning
- revit - data available for the BD01, BD2, LD and LI systems
- Easy adjustment of the busbar run to the shape of the building
- Collision-free busbar runs with overlapping components such as water pipes and ventilation shafts

Data for Building Information Modeling (BIM): Efficiency from planning to maintenance thanks to the use of BIM data

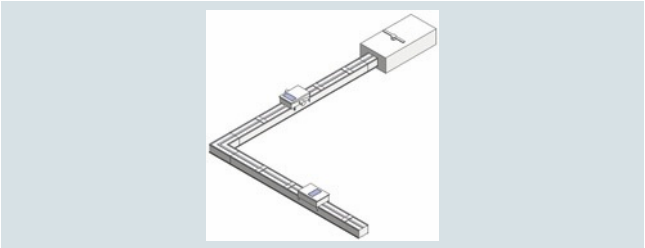

Convenient electrical planning with SIMARIS software tools

Planning electric power distribution for industrial plants, infrastructure and buildings is becoming more and more complex. To help electrical planning engineers to work faster and better under existing conditions, the innovative SIMARIS software tools effectively support the planning process.

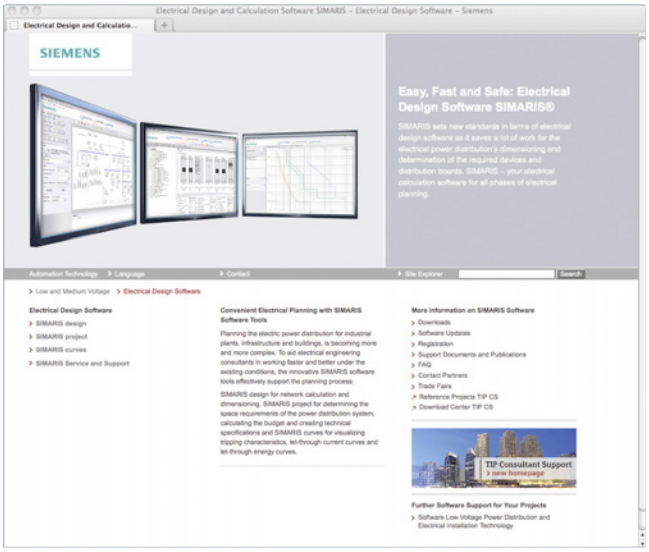

SIMARIS design

For network calculations and dimensioning, SIMARIS design offers a secure solution from the broad product portfolio of power distribution, according to recognized rules and standards (VDE, IEC), and specific requirements. The specific components that are required are selected automatically on the basis of the given project structure and the basic data collected. Advanced users can buy the SIMARIS design professional version which provides additional functions: Display and dimensioning of networks with parallel network operation, automatic selectivity evaluation, export of the created project for further processing in SIMARIS project, creation of active and passive emergency power supply systems.

SIMARIS project

The software tool SIMARIS project enables you to create project documents quickly, easily and clearly to fit the space and budget requirements of your complete power distribution system. Based on the systems and devices determined, you can also create a list of specifications in GAEB D81 or RTF format – in German or English – at the click of a button, since the relevant specification texts are stored for all the components, configured automatically, and compiled in a project-specific manner.

SIMARIS sketch

With SIMARIS sketch, you can intuitively create the 3D routing of the busbar trunking systems BD01, BD2, LD and LI for your particular project. These routings, including accessories, are directly represented in 3D, allowing an easy and helpful 3D visualization of how the busbar routing will look in the project.

For further information see www.siemens.com/simaris

SIVACON 8PS busbar trunking systems configurator

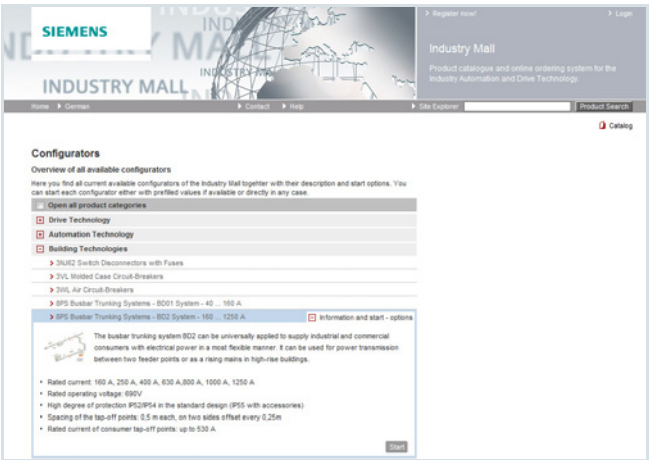

The product configurator (selection aid) enables you to order busbar trunking systems up to 1250 A and is available in the Industry Mall. The same configurator is included in Interactive Catalog CA 01.

The following configurators are available:

- SIVACON 8PS system BD01, 40 A to 160 A
- SIVACON 8PS system BD2, 160 A to 1250 A

Configurators can be found at
www.siemens.com/lowvoltage/configurators

Should you have any queries concerning installation, functionality or application options –

please mail us at
support.ic@siemens.com

We will be pleased to assist you.

More information

- Industry Mall

Information and order platform on the Internet:
www.siemens.com/industrymall

- CA01

Interactive Catalog
www.siemens.com/ca01download

Technical documentation on the Internet

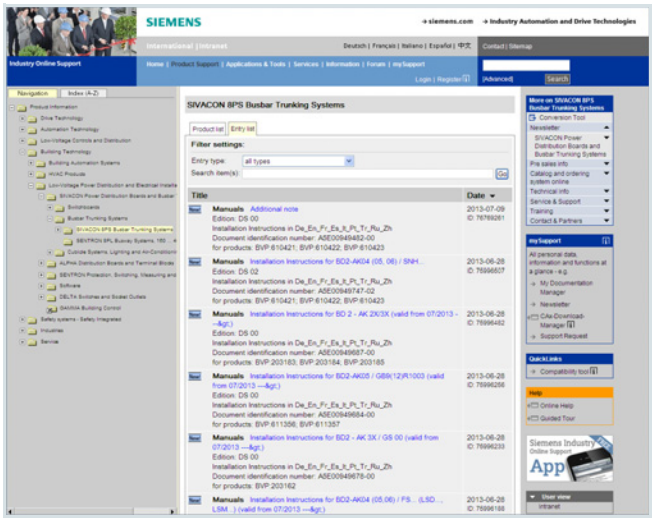

You will find an overview of the available technical documents for SIVACON 8PS busbar trunking systems on our daily updated website at
www.siemens.com/lowvoltage/product-support

Build on a sound basis

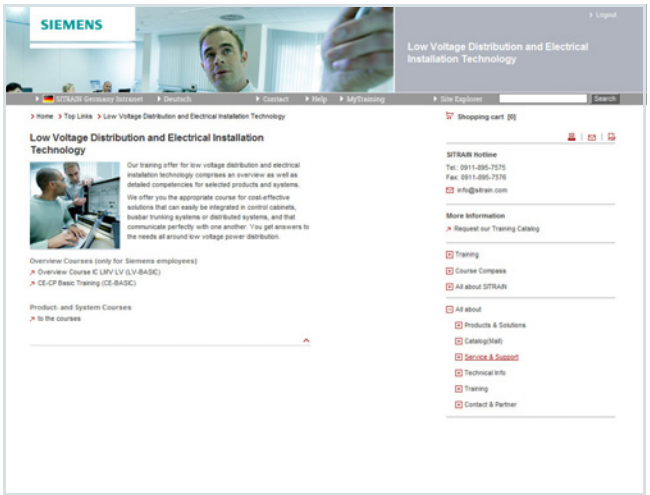

With our courses, you can lay the foundations for your business success. Expert lecturers provide you with the necessary theoretical and practical knowledge about our SIVACON 8PS busbar trunking systems. The courses are dynamic and easy to understand, with multimedia teaching equipment and many practical examples. They are provided in German and English. For details of our current range of courses, please visit our website:
www.siemens.com/lowvoltage/training

Support

If you would like to obtain more information, please contact our Siemens
Customer Support Center.
Tel.:+49 180 524 8437
Fax:+49 180 524 2471
(Charges depending on provider)
E-mail: support.ic@siemens.com

Notes

Busbar Trunking Systems, Overview

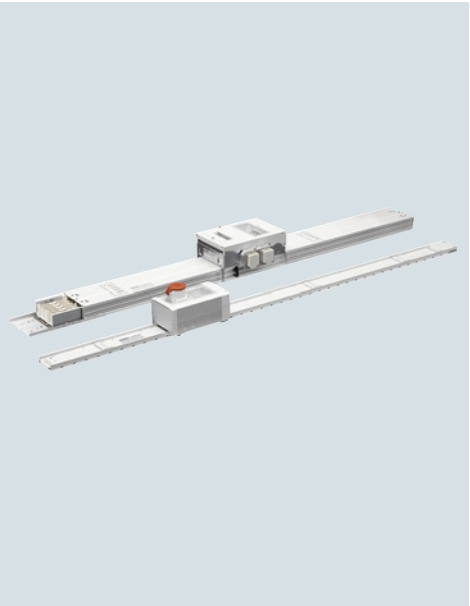

Contents

For further technical product information:

Siemens Industry Online Support:
www.siemens.com/lowvoltage/product-support

→ Product list:
Technical specifications

→ Entry list:
Certificates / Characteristics / Download / FAQ / Manuals / Operating instructions / Updates

Busbar Trunking Systems, Overview

Contents

Overview

Busbar trunking systems

This catalog contains:

- BD01 system up to 160 A
- BD2 system up to 1250 A

Systems up to 6300 A on request.

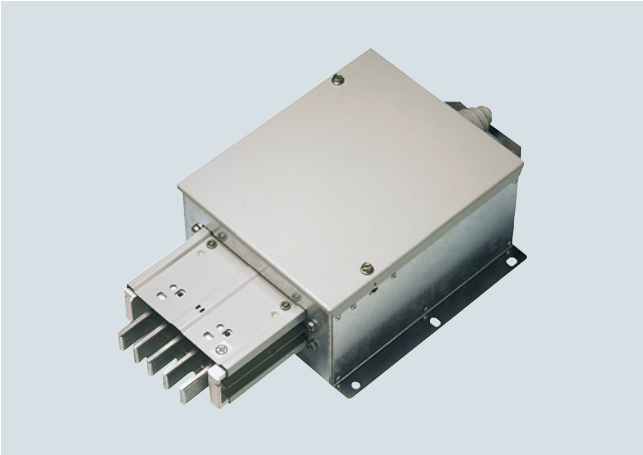

Feeding unit (end feeding unit)

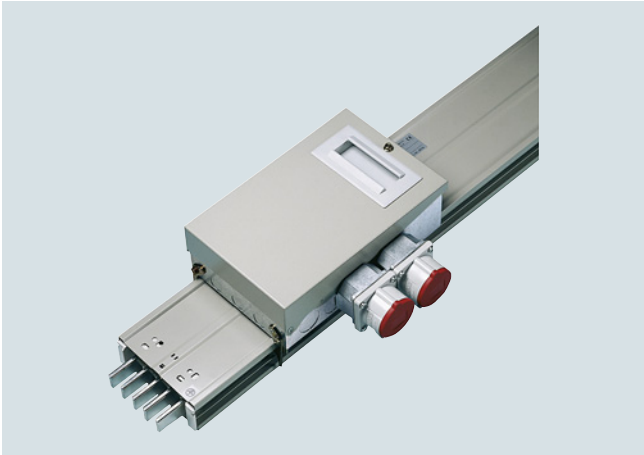

Trunking unit with tap-off unit

BD01 and BD2 busbar trunking systems

BD01 system – 40 A up to 160 A

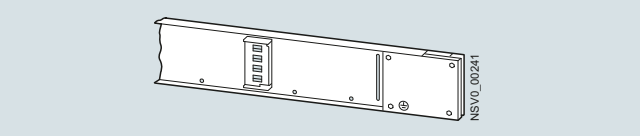

BD2 system – 160 A up to 1250 A

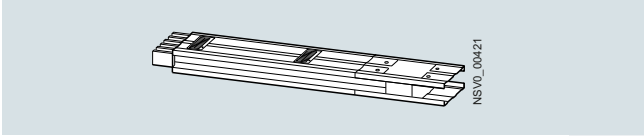

Overview

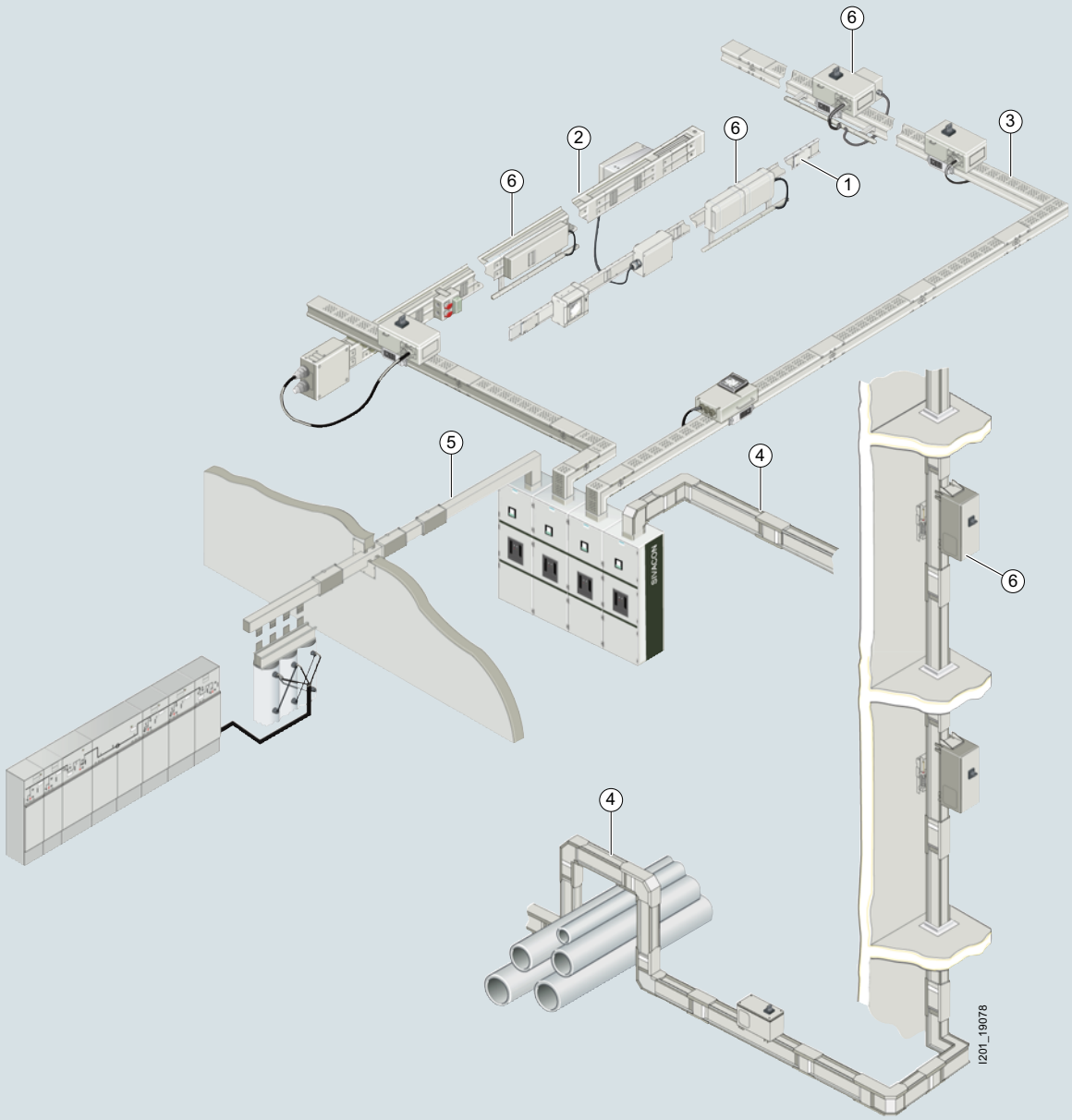

1. BD01 system
2. BD2 system
3. LD system
4. LI system
5. LR system
6. Communication-capable busbar trunking systems for connection to the following bus systems:
   - KNX (EIB / Instabus)
   - AS-Interface
   - PROFIBUS
   - PROFINET
   - Modbus

Benefits

① *BD01 system up to 160 A*

The busbar trunking system for power distribution in craft and trade:

- High degree of protection up to IP55
- Flexible power supply
- Easy and quick planning
- Time-saving mounting
- Reliable mechanical and electrical connection technology
- High stability, low weight
- Few basic modules required
- Storage-friendly system
- Variable junction units
- Versatile tap-off units
- Positive opening and closing of tap-off points

② *BD2 system up to 1250 A*

The busbar trunking system for operation in the harsh industrial world:

- High degree of protection up to IP55
- Easy and quick planning
- Time-saving and economical mounting
- Reliable and safe operation
- Flexible modular system with simple solutions for every application
- Early planning of the power distribution system without exact knowledge of load locations
- Early readiness for operation thanks to fast and simple mounting
- Innovative design: No more compensation units to compensate elongation
- Codable tap-off units and tap-off points
- Sealable throughout

③ *LD system up to 5000 A*

The busbar trunking system for optimized power distribution in industry:

- Degree of protection up to IP54
- Quick and easy mounting
- Reliable and safe operation
- Space-saving, compact design up to 5000 A in one enclosure
- Load tap-offs up to 1250 A
- Design-verified connection to distribution boards and transformers

④ *LI system up to 6300 A*

The busbar trunking system for power transmission and distribution in infrastructure – e.g. in multi-floor buildings – and in industrial applications:

- Reliable and easy to install
- Reliable and safe operation
- Load tap-offs up to 1250 A
- Tested connection to distribution boards (design-verified connection to SIVACON S8) and transformers

⑤ *LR system*

The busbar trunking system for power transmission under extreme ambient conditions (IP68).

Detailed information about this system is available from the Siemens branch located close to you.

⑥ *Communication-capable busbar trunking systems*

Communication-capable function expansions for combination with known tap-off units:

- Can be used with the BD01, BD2, LD and LI systems
- Applications:
  - Building control
  - Switching, reporting and remote control
  - Consumption recording and remote monitoring of decentralized power tap-off units
  - Interlinking of various trades
- Connection to the bus systems KNX (EIB/Instabus), AS-Interface, PROFIBUS, PROFINET and Modbus
- Integrated, efficient and future-proof solution thanks to the integration of measuring devices in energy management solutions according to ISO 50001
- Flexible with plug-in tap-off units including measuring devices
- Cost-efficient with greater transparency of the energy consumption
- Reliable thanks to central control of the power distribution

More information

SIVACON 8PS busbar trunking systems configurator

Busbar trunking systems up to 1250 A can be ordered using the product configurator (selection aid).

The following configurators are available:

- SIVACON 8PS BD01 system, 40 ... 160 A
- SIVACON 8PS BD2 system, 160 ... 1250 A

This selection aid can be accessed through the Industry Mall and is also included in Interactive Catalog CA 01 on a DVD, which is available free of charge.

Manual

Planning with SIVACON 8PS – busbar trunking systems up to 6300 A
German: Article No. A5E01541017-02
English: Article No. A5E01541101-02

Leaflet

For safe power flows –
SIVACON 8PS busbar trunking systems

- German: Article No. IC1000-G320-A158-V1
- English: Article No. IC1000-G320-A158-V1-7600

An integrated solution for safe and efficient power supply –
LI busbar trunking system

- German: Article No. IC1000-G320-A194-V1
- English: Article No. IC1000-G320-A194-V1-7600

Internet

www.siemens.com/busbar

Overview

Busbar trunking systems	Rated current A	Rated operational voltage V AC	Frequency Hz	Number of active conductors	Degree of protection	Ambient temperature, min./max. °C
BD01 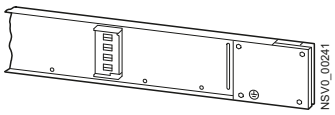 NSV0_00241	40 63 100 125 160	400	50	4 (PE = enclosure)	Up to IP55	–5/+40
BD2A **BD2C** 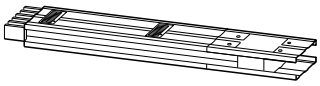 NSV0_00421	160 ... 1000 160 ... 1250	690	50	5	Up to IP55	–5/+40
LDA1 ... LDA8 **LDC2 ... LDC8**  NSV0_00681	1100 ... 4000 2000 ... 5000	1000	50	4 or 5	Up to IP54	–5/+40
LI-A0800 ... LI-A5000 **LI-C1000 ... LI-C6300**  NSV0_00687	800 ... 5000 1000 ... 6300	1000	50	3, 4, 5, 6 (PE = enclosure)	Up to IP66	–5/+40
LRA01 ... LRA29 **LRC01 ... LRC29** 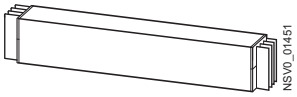 NSV0_01451	400 ... 5000 630 ... 6300	1000	50	4, 5	IP68	–5/+40

Mounting position	Length m	Tap-off points	Tap-off units	Material	Fire load kWh/m	Can be combined with communication-capable tap-off units for
Edgewise, flat (tap-off points downwards)	2 3	On one side every 0.5 or 1 m	Up to 63 A	Insulated Al or Cu conductors, painted sheet-steel enclosure	0.76	Lighting control
Edgewise, flat and vertical	0.5 ... 3.25	None On two sides offset every 0.25 or 0.5 m	Up to 530 A	Al or Cu-busbars, painted sheet-steel enclosure	0.6 ... 0.67 (without tap-off points)	Lighting control, remote switching, signaling and consumption recording
Horizontal, edgewise and vertical	0.5 ... 3.2	None On one side every 1 m On two sides every 1 m	Up to 1250 A	Insulated Al or Cu busbars, painted sheet-steel enclosure	4.16 ... 8.83 (without tap-off points)	Remote switching and signaling and consumption recording
Horizontal, edgewise and vertical	0.35 ... 3	None Up to 3 tap-off points per side on lengths up to 3 m	Up to 1250 A	Insulated Al or Cu busbars, painted aluminum enclosure	On request	Remote switching and signaling and consumption recording
Horizontal, edgewise and vertical	0.5 ... 3	None On one side selectable	Up to 630 A	Epoxy resin system, Al or Cu busbars	–	–

Overview

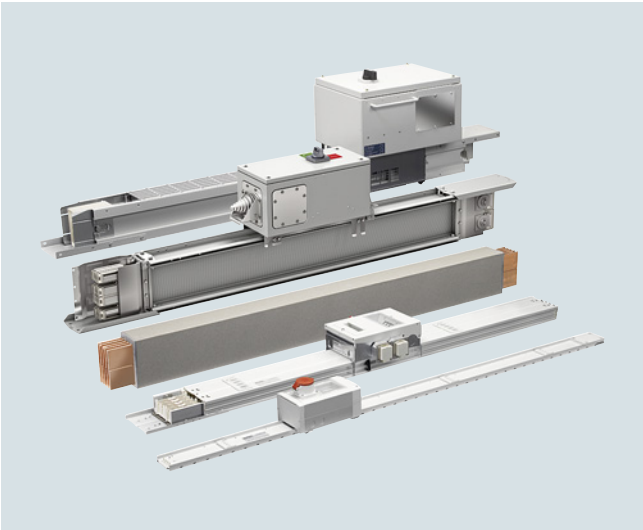

SIVACON 8PS busbar trunking systems for currents from 40 to 6300 A

When it comes to developing a power distribution concept complete with the configuration of systems and system components, the end user's requirements have to be coordinated with the manufacturer's possibilities.

Descriptions are provided accordingly of the individual systems, their technical features and their fields of application. Another element is the graphic representation of the various busbar trunking elements. All details of importance for the planning work are emphasized and explained.

You will find ideas for a ready-to-use planning solution in chapters 3 to 5 of "Configuration information". For example, the basics of dimensioning are presented in detail along with in-depth information on topics such as system construction, short-circuit protection, fire barriers or functional endurance.

Services and engineering tools are available from Siemens to simplify the drawing up of customer specifications.

General information

When developing the planning concept of a power supply system it is necessary not only to consider the standards and specifications in force but also to clarify the correlations between economy and technology. Electrical equipment such as distribution boards and transformers must be dimensioned and selected so that they represent an optimum in their entirety and not just individually.

All components must be sufficiently dimensioned for the loads which arise during operation at rated values as well as in the event of a fault. Other decisive points to be considered when drawing up the power concept are:

- The type, utilization and shape of building (e.g. high-rise, flat-roof and number of stories)
- Determination of load centers and selection of possible supply routes and locations for transformers and main distribution boards
- Determination of building-related connected loads according to specific loads per unit area dependent on the building's use
- Specifications and requirements imposed by the building authorities
- Requirements imposed by the power supply companies

The result will never be a single solution but several versions which must be assessed with regard to their technical and economic implications. The following requirements are paramount in this connection:

- Easy and clear-cut planning
- Long endurance
- High availability
- Low fire load
- Flexible adaptation to changes within the building

In most applications these requirements are easily met by the use of suitable busbar trunking systems. For this reason, busbar trunking systems rather than the cable installation method is being used more and more often by engineering offices for the transmission and distribution of power. Siemens offers busbar trunking systems from 40 to 6300 A:

- The BD01 busbar trunking system from 40 A to 160 A for supplying power to workshops with tap-off units up to 63 A
- The BD2 system from 160 A to 1250 A for supplying power to medium-size loads in buildings and in industry
- The ventilated LD system from 1100 A to 5000 A for supplying loads with medium power consumption in industry
- The LI sandwich system from 800 A to 6300 A for supplying large amounts of power in buildings
- The LR encapsulated system from 400 A to 6300 A for power transmission in extreme ambient conditions (IP68).

Overview

Busbar trunking systems

The strengths of busbar trunking lie in the transmission and distribution and the switching and protecting of electrical power.

The integration of automation and building management systems in the Siemens busbar trunking systems results in additional benefits and at the same time increases the flexibility of the busbar trunking.

The combination of standard tap-off units with standard ancillary equipment units ensures efficiency particularly in planning, installation and operation.

Advantages of the system solution during planning:

- Modular system
- Tested standard components
- Free choice of bus system
- Use of common bus systems

Advantages of the system solution during commissioning:

- Easy and quick installation
- Start-up in steps possible
- Flexible in case of modifications and expansions

Advantages of the system solution during operation:

- Transparency of switching states
- Central recording of power costs
- Increase in plant availability as a result of immediate detection of the type of fault and its location
- Preventive maintenance through recording of operating hours and operating cycles

Busbars instead of cables

Overview

Easier when it comes to planning

Easy to plan, quick to install and flexible to use: Busbar trunking systems from Siemens bring energy economically into any building. The power distribution system can be precisely planned from the total connected load and the type and number of loads. Clarity is assured by the line-shaped network structure with regularly arranged load tap-offs. Using standardized sizes, all applications can be implemented quickly and in minimum space.

Quicker when it comes to installing

Benefits during installation: Two-man assembly of busbar trunking systems saves time and money compared to the costly cable installation method. Installation errors are practically ruled out by the safe and user-guided connection technology. No special tools are required. Another benefit for quick installation: Siemens busbar trunking systems are easy and therefore quick to mount with large distances between fixing centers (up to 4 m for busbars compared to every 1.5 m for cables).

Busbar trunking systems from Siemens are a cost-efficient alternative to cable installation.

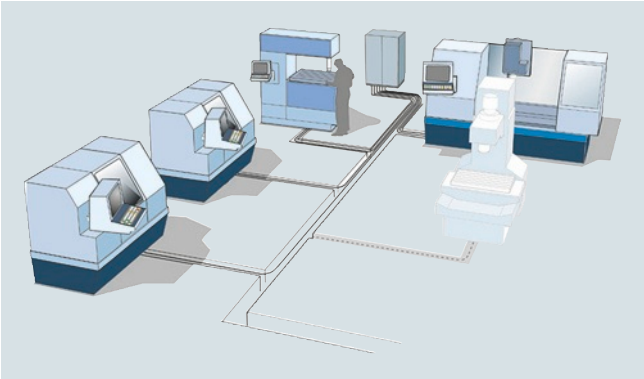

With cable installation, new loads are connected by way of an additional sub-distribution board, which is costly and time-consuming

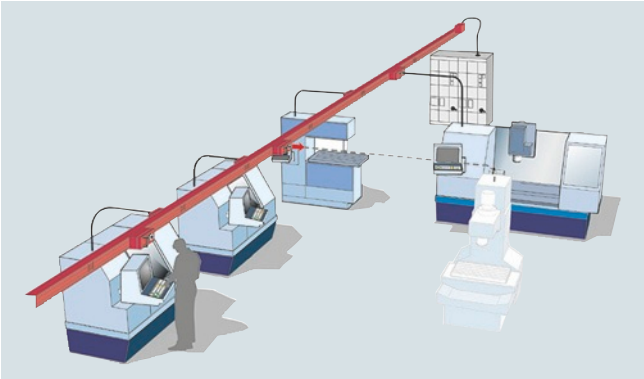

Tap-off units near the loads make local arrangements more transparent

High short-circuit strength and minimum fire load mean greater safety

A step-ahead in terms of safety – be it short-circuit strength or fire load. The BD2A-250 busbar trunking systems have a fire load of just 1.32 kWh/m, for example, while the figure for comparable cables (NYY 4 × 95/50 mm^2) is 5.19 kWh/m. Also, the busbars are halogen-free. Busbar trunking systems from Siemens have a high short-circuit strength. And the near-load protection against short circuits also facilitates troubleshooting.

High fire load with cables

Low fire load with busbar trunking system

More flexible in case of modifications and expansions

If the power distribution system has to be adapted to new requirements, the busbar will take you quicker to your goal.

For example, new tap-off units can simply be mounted on the tap-off points. The system can be expanded and modified without difficulty. Tap-off units and system parts increase the flexibility. Cost-intensive downtimes are eliminated or minimized. The power distribution system enables faultless operation with high user-friendliness and safety.

BD01 System – 40 ... 160 A

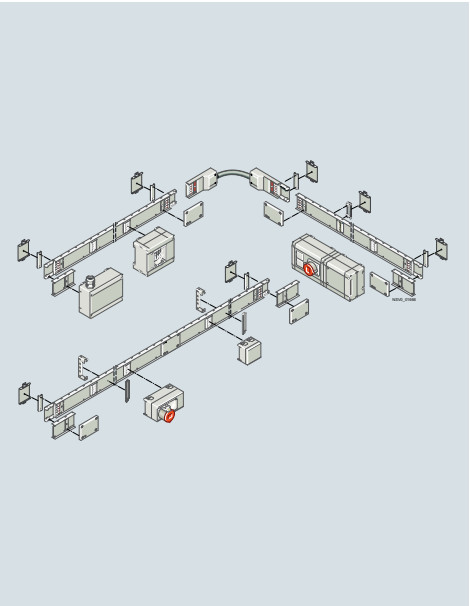

For further technical product information:

Siemens Industry Online Support:
www.siemens.com/lowvoltage/product-support

→ Product list:
Technical specifications

→ Entry list:
Certificates / Characteristics / Download / FAQ / Manuals / Operating instructions / Updates

Overview

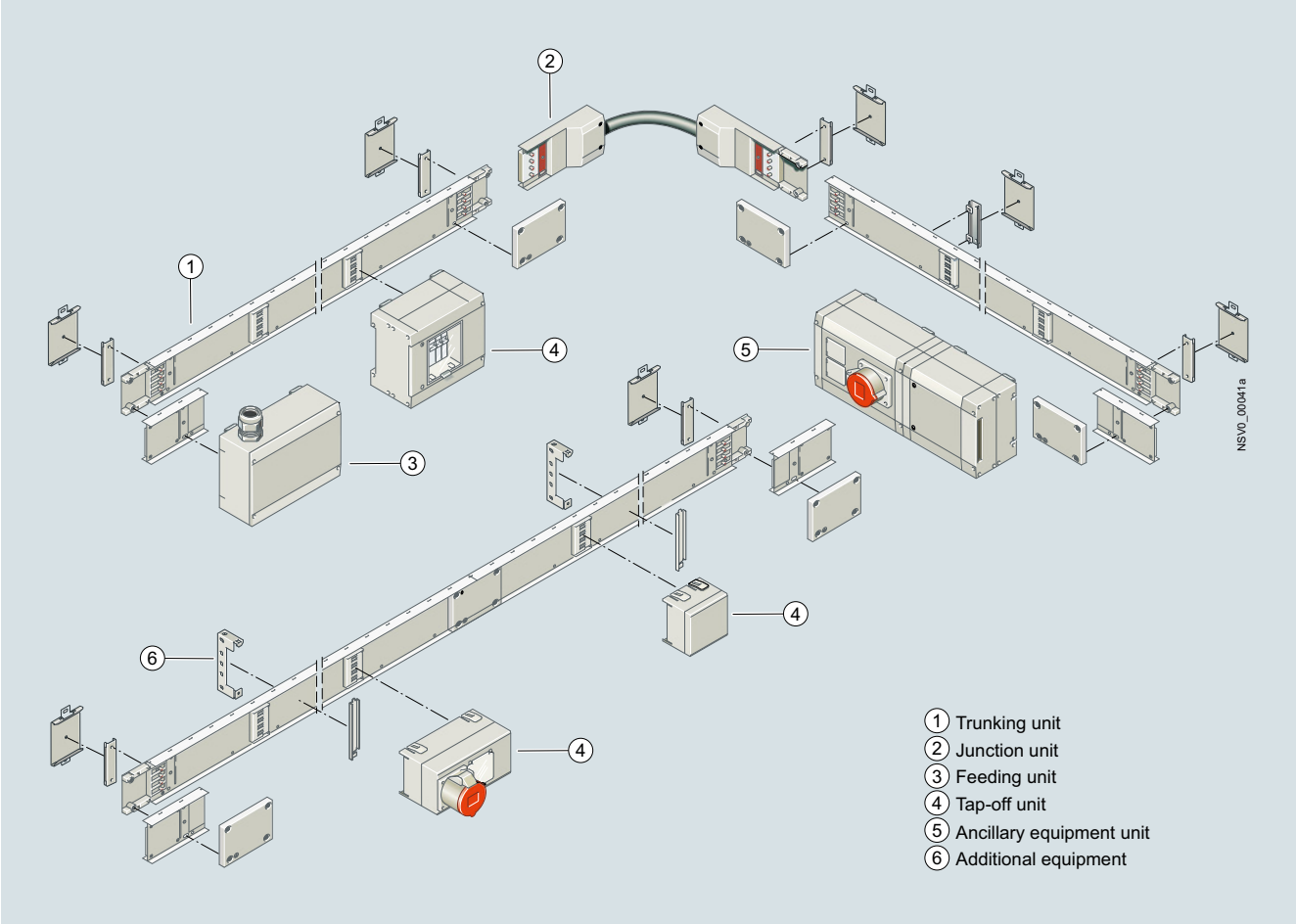

Version

Design-verified switchgear and controlgear assembly according to

- IEC 61439-1
- IEC 61439-6

Degree of protection

- High degree of protection IP54 with tap-off points at sides and bottom
- Degree of protection IP50 with tap-off points at the top
- Degree of protection increase to IP55 with additional equipment

Components

Trunking units

- 5-conductor configuration
- 2 or 3 tap-off points at a distance of 1 m
- 4 or 6 tap-off points at a distance of 0.5 m
- Lengths of 2 m and 3 m

Junction units

- Flexible junction unit

Feeding units

- Universal infeed

Tap-off units

- Up to 63 A
- With built-in parts or for customized device installation
- For 3, 4 or 8 modular widths (MW)
- With or without device installation unit

Ancillary equipment units

- For 4 or 8 modular widths (MW)
- With or without device installation unit
- With or without socket assembly

Additional equipment

- Mounting sets for degree of protection IP55
- Fixing and suspending
- Coding sets
- Fire barrier kit S 90

Benefits

- Flexible power supply
- Easy and quick planning
- Time-saving mounting
- Reliable mechanical and electrical connection technology
- High stability, low weight
- Few basic modules required
- Storage-friendly system
- Variable change of the direction of the busbar run
- Versatile tap-off units
- Positive opening and closing of tap-off points
- Additional equipment for increasing the degree of protection to IP55

Design

Trunking units

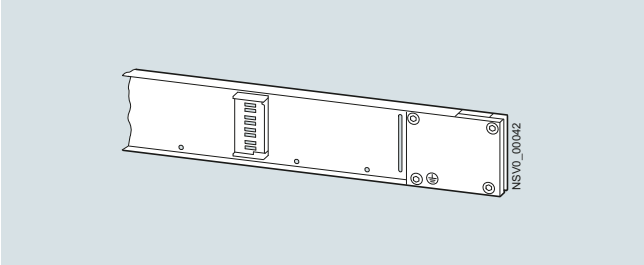

The trunking units are available in 2 and 3 meter lengths. They comprise a galvanized metal enclosure painted light gray (RAL 7035). They are equipped with 4 bars for L1, L2, L3, N (aluminum conducting paths, copper for 160 A; silver-plated copper pick-up and connection contacts).

The enclosure of the trunking unit also serves as PE conductor.

Five levels of current are available in only one size: 40 A, 63 A, 100 A, 125 A and 160 A.

The tap-off points are arranged on one side at a distance of 0.5 or 1 m apart. The 2 m lengths have two or four tap-off points, the 3 m lengths have three or six.

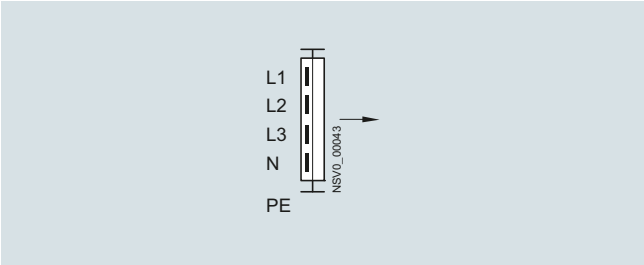

The tap-off points are finger-safe. They are opened automatically by the tap-off units and close by themselves when the tap-off units are removed.

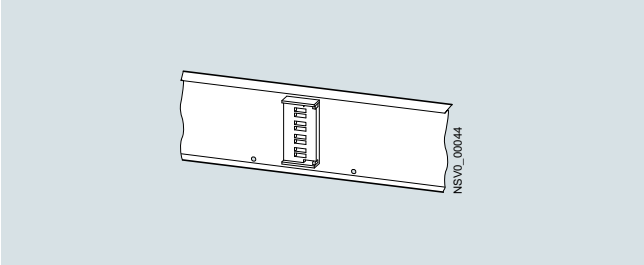

Connection technology

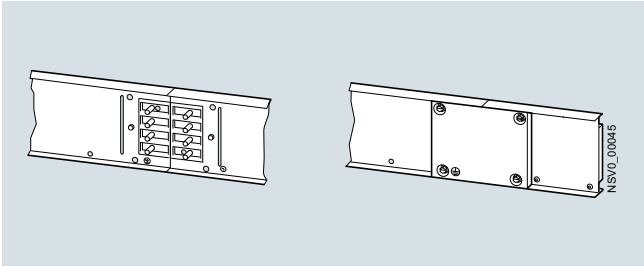

Assembly of the trunking units, also with end flanges and feeding units, is fast and inherently secure. The trunking unit or end flange is simply inserted in the lower enclosure of the joint block. Then the joint block top or feeding unit is mounted, and finally a safe connection is produced by tightening four screws. The PE path is established automatically when the enclosures are connected.

An expansion compensation is built into the joint block.

End flanges

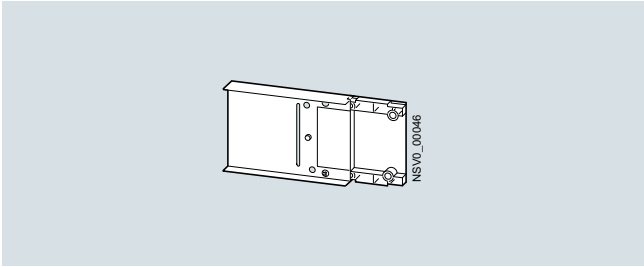

These serve as touch protection at the ends of the busbar run. They are suitable for use with all systems. Two end flanges are supplied as standard with each feeding unit.

Junction units

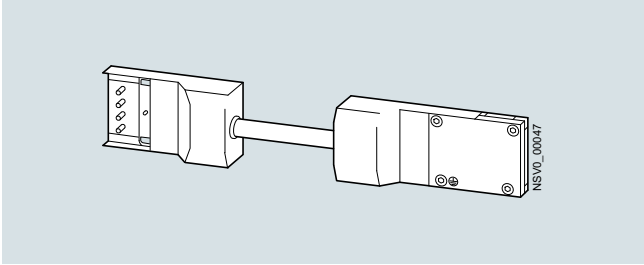

The junction units are available in 100 A and 160 A versions, each in lengths of 0.5 m and 1 m. They consist of flexible conducting paths.

Flexible junction units mean that the busbar run can be routed in any direction. The 0.5 m version is recommended for right angles, the 1 m version for bypassing obstacles or for coping with height offsets.

Introduction

Feeding units

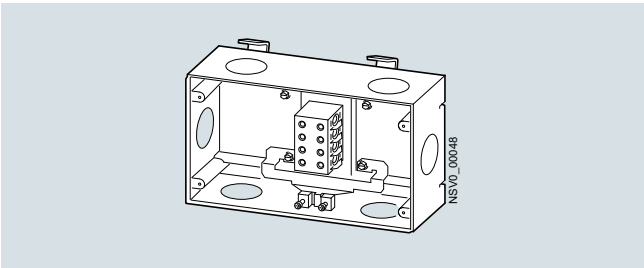

Two versions are available, one for 100 A and one for 160 A.

The feeding unit can be used as:

- Entry feeding units

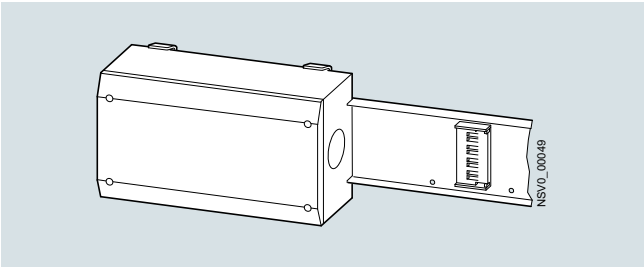

- End feeding units

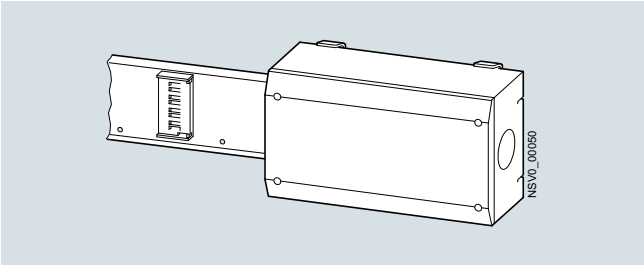

- Center feeding unit

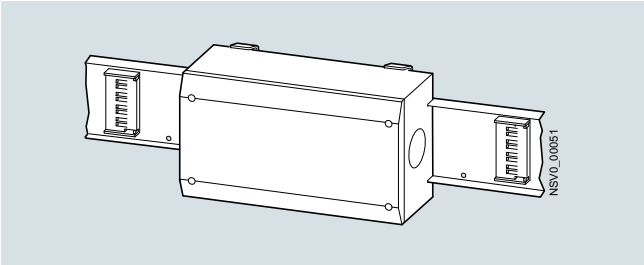

Two end flanges are included in the scope of supply with each unit.

M32, M40 and M50 cable entries are possible from four sides. With the 160 A version, the M63 cable entry is possible on the side. Plastic cable glands with strain relief must be used (not included in scope of supply of unit).

In the case of the feeding units, the BD01-B fixing brackets on the bottom of the joint block must be used in accordance with page 3/24.

Molded plastic-enclosed tap-off units

Common features

- Molded-plastic enclosure
- Partially transparent cover for protective devices
- Power pick-up through silver-plated horseshoe contacts
- Reliable prevention of incorrect mounting
- Cable entry is from one side only (use plastic cable glands with strain relief, not included in scope of supply of unit)
- The tap-off unit must first be removed from the trunking before it can be opened and the cable can be connected
- The connecting cable should be supported separately if necessary

Tap-off units with components fitted

- Two sizes (16 A and 32 A) for three cylindrical fuses (10 mm × 38 mm)
- One size with 3 MW space requirement (1 MW = 18 mm)

There are various versions with fuse bases, miniature circuit breakers, Schuko and CEE socket outlets up to and including 32 A.

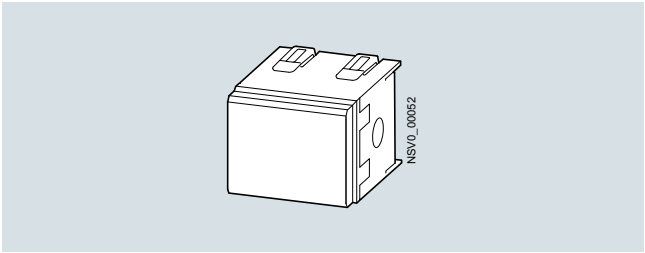

BD01-AK01X/ZS

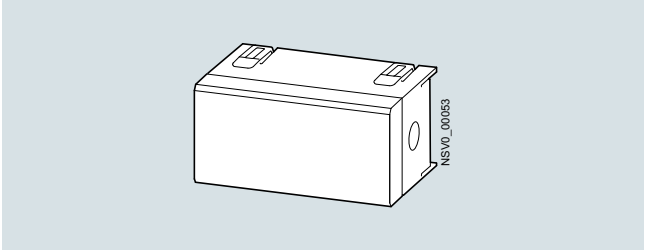

BD01-AK02X/ZS3

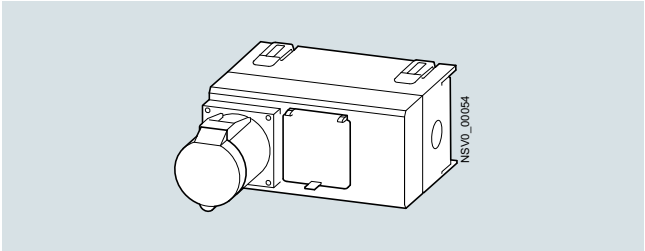

BD01-AK02M0/CEE165A163

Tap-off units for free arrangement of components

- One size with 3 MW space requirement (1 MW = 18 mm), for operation from the outside through a flap integrated in the cover.
- Installation of devices (e.g. miniature circuit breakers) according to DIN 43871 up to and including 32 A possible.

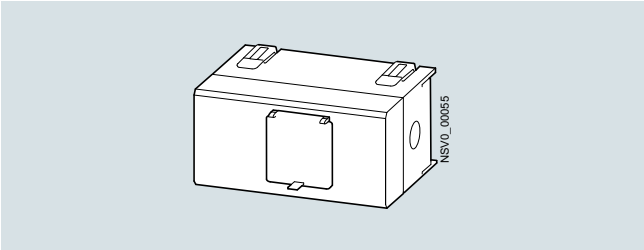

BD01-AK02M0/F

Tap-off units made of aluminum

Common features

- The enclosure is made from aluminum and molded plastic at both ends
- A DIN rail is integrated for component mounting
- Power pick-up through silver-plated horseshoe contacts
- The isolator built into the tap-off unit ensures that the tap-off unit is voltage-free when the cover is open
- The tap-off unit can only be fitted to or removed from the tap-off point with its cover open (contacts retracted)
- Reliable prevention of incorrect mounting
- Cable entry is possible from three directions (use plastic cable glands with strain relief; not included in scope of supply of unit).
- Can be combined with ancillary equipment units for additional functions
- The connecting cables should be supported separately if necessary

Tap-off units with components fitted

- Two sizes with 4 MW or 9 MW space requirement (1 MW = 18 mm)
- Various versions with fuse bases, miniature circuit breakers up to and including 63 A, with Schuko and CEE socket outlets up to and including 32 A
- Versions with fitted miniature circuit breaker have a device installation unit

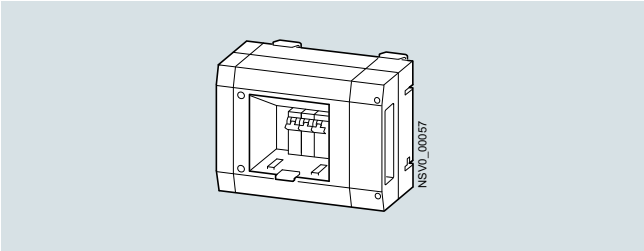

BD01-AK1M1/A163

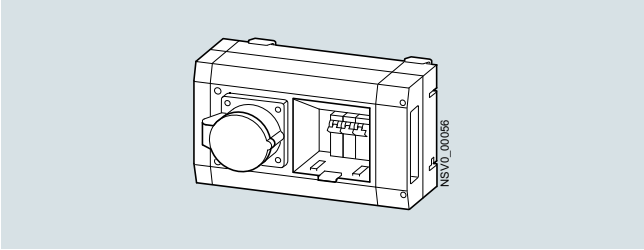

BD01-AK2M1/CEE165A163

Tap-off units for free arrangement of components

- Two sizes with 4 MW and 9 MW space requirement (1 MW = 18 mm)
- Without or with device installation unit for external actuation (two sizes with 4 MW and 9 MW)
- Installation of devices (e.g. miniature circuit breakers) according to DIN 43871 up to and including 63 A possible.

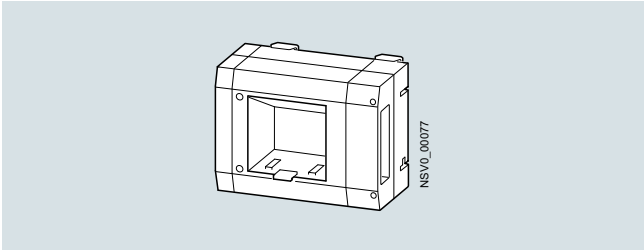

BD01-AK1M1/F

Ancillary equipment units

The ancillary equipment units are used for expanding the tap-off units or infeeds used. They can be mounted to the side of them.

Common features

- The enclosure is made from aluminum and molded plastic at both ends
- Cable entry is possible from four directions (use plastic cable glands with strain relief; not included in scope of supply of unit).
- The connecting cables should be supported separately if necessary
- Can be combined with tap-off or feeding units
- A DIN rail is integrated for component mounting
- Two sizes with 4 MW and 9 MW space requirement (1 MW = 18 mm)
- Without or with Schuko or CEE socket outlets
- Without or with device installation unit for external actuation (two sizes with 4 MW and 9 MW)
- Installation of devices (e.g. fuse bases) according to DIN 43871 up to and including 35 A possible.

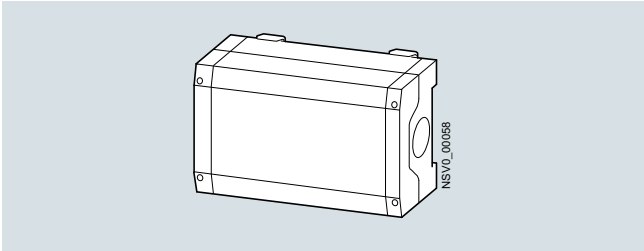

BD01-GK2X/F

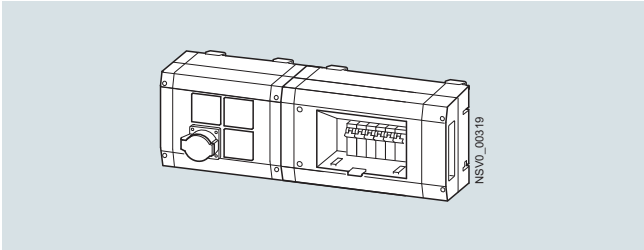

BD01-GK1X/... (left) with BD01-AK2M2/... (right)

Accessories

Additional equipment for IP55

Trunking units

The higher degree of protection is achieved by means of additional seals and a flange at the tap-off point or connection point.

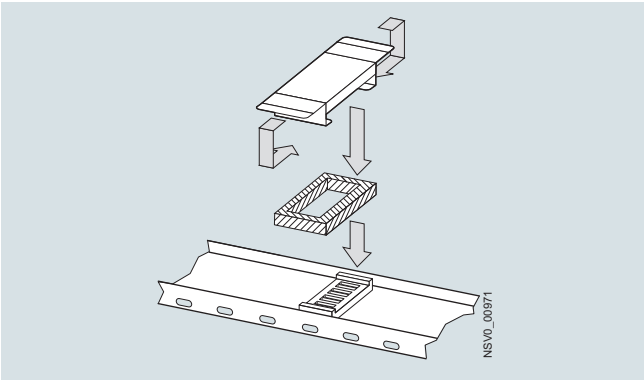

Tap-off point: BD01-FAS

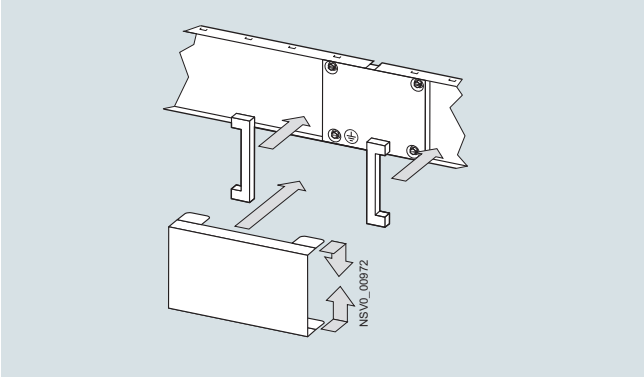

Connection point: BD01-FS

Feeding units

With mounting position at the bottom, the higher degree of protection is achieved by means of additional seals and a flange at the connection point.

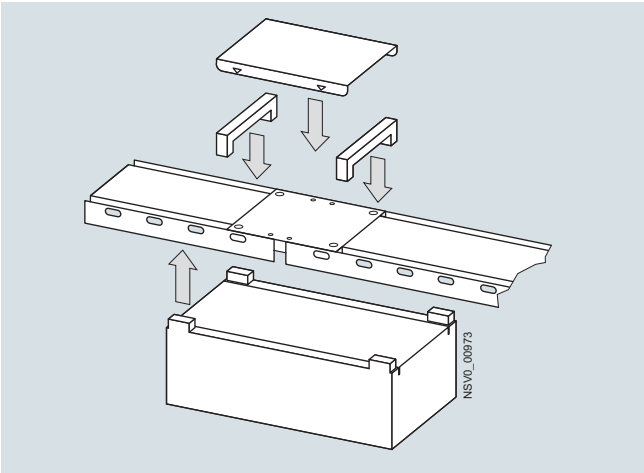

Mounting position at the bottom: BD01-FES

With mounting position at the side or top, the higher degree of protection is achieved by means of additional seals and an edge protector at the sides of the feeding unit. When the feeding unit is installed at the end of a busbar run, just one seal and one edge protector are needed.

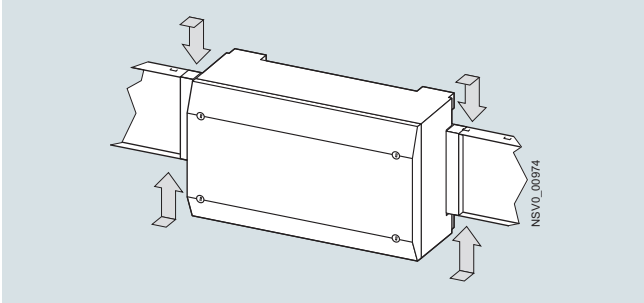

Mounting position at the side: 2 × BD01-KS

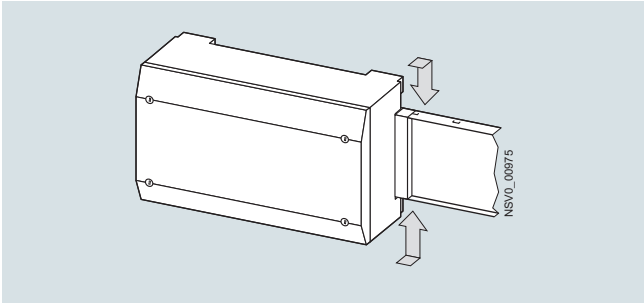

Mounting position at the side and end of a busbar run: BD01-KS

Tap-off units

The higher degree of protection is achieved by means of additional seals and an edge protection at the sides of the tap-off unit.

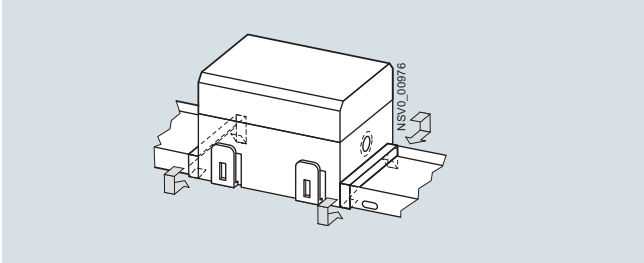

BD01-AK01X-IP55, BD01-AK02X-IP55

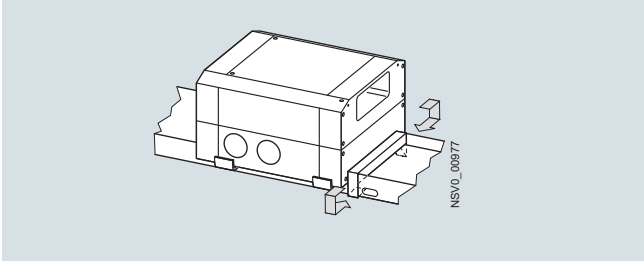

BD01-AK1X-IP55, BD01-AK2X-IP55

Fixing

Universal fixing brackets

The universal fixing brackets can be used for wall and ceiling mounting. At normal mechanical load, the maximum fixing distance is 3 m for edgewise mounting and 1.5 m for flat mounting.

At higher mechanical stress (e.g. pulling of plugs), an intermediate suspension with an additional fixing bracket at the trunking unit is recommended.

Once the fixing point is decided, the tabs on the fixing bracket are pushed in to fix the busbar run.

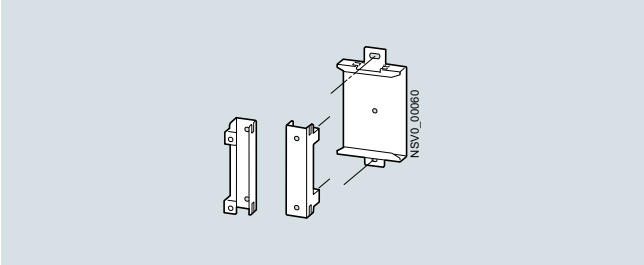

BD01-B

Hanger brackets

These fixing brackets can be used for suspension of flat-mounted trunking units. Also they can be fastened at the connection points in order to increase the mechanical rigidity of the trunking units.

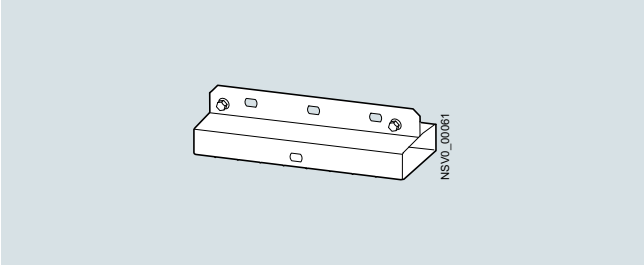

BD01-BAP

Suspension brackets

The suspension brackets can be used for wall, ceiling and suspension mounting of the system. They can be fitted at any point of the trunking unit. At normal mechanical load, the maximum fixing distance is 3 m for edgewise mounting and 1.5 m for flat mounting.

At higher mechanical loads (e.g. pulling of plugs), an intermediate support with an additional fixing bracket at the trunking unit is recommended.

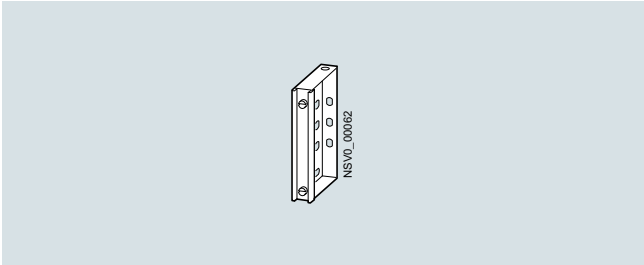

BD01-BA

Introduction

Coding

The systems can be coded for different frequencies or voltages. For this purpose, the BD01-K coding set can be fitted by the user to the installed system at each tap-off point. Four coding positions are possible.

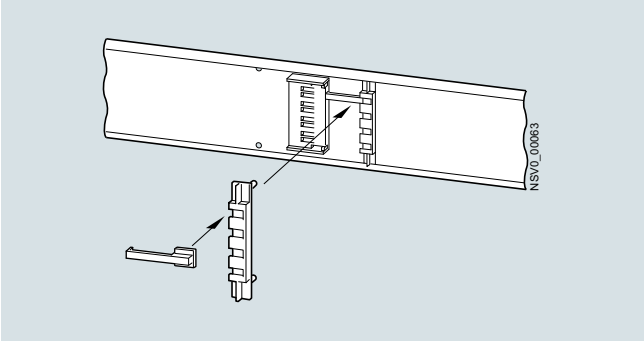

Coding on the tap-off point

Tap-off units can be coded by the customer by adapting the front face.

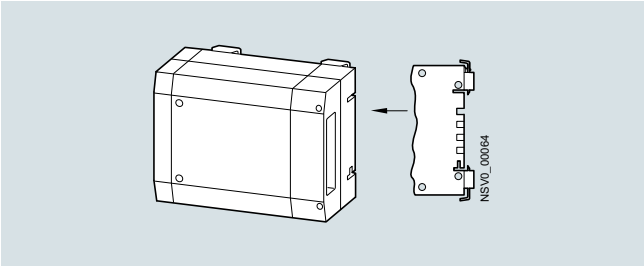

Coding on the tap-off unit

Sealing

Every tap-off point on the trunking unit can be sealed.

Feeding, junction, tap-off and ancillary equipment units can be made sealable with additional components (please inquire).

Cable glands

For the feeding, tap-off and ancillary equipment units, use plastic cable glands with strain relief (not included in scope of supply of unit).

Terminals

For the equipment of the tap-off units and ancillary equipment units, screw terminals from Siemens, Weidmüller or Phoenix must be used for the N and PE connection. We recommend the 8WH terminal blocks from Siemens (see Catalog LV 10 “Low-Voltage Power Distribution and Electrical Installation Technology”, and Catalog LV 52 “Terminal Blocks”).

Fire barriers

If the busbar system is routed through a fire wall or ceiling, a fire barrier must be fitted. Depending on the customer's requirements, Siemens offers the fire resistance classes S 90 (in future EI 90) (see page 3/22).

Factory-fitted equipment:

- External fire barrier as kit for mounting by the customer

Mineral mortar or fire barrier material to seal any gaps between the busbar trunking element and the building element must be provided by the customer.

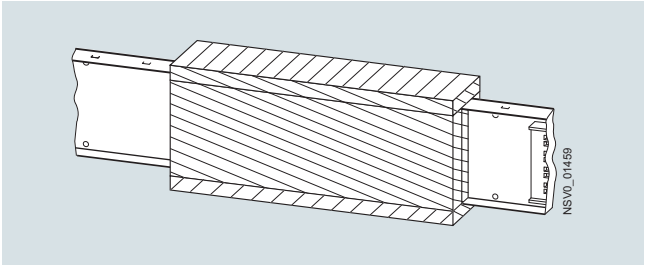

BD01-S90 fire barrier (for mounting by the customer)

The approval papers for Germany[1)] must be ordered separately:

- BD01-S90-ZUL-D approval kit
  (certificate of approval, wall-mounted signs and declaration of conformity)

[1)] Approval papers for Europe available soon

Technical specifications

General technical specifications

Type		BD01-...
Standards and specifications		IEC/EN 61439-1 and -6
Resistance to climate		Damp heat, constant, according to IEC 60068-2-78 Damp heat, cyclic, according to IEC 60068-2-30
Ambient temperature min./max./24 h average	°C	-5/+40/+35
Degree of protection acc. to IEC/EN 60529		
• Edgewise; tap-off points at the side		IP54, increase to IP55 with additional equipment
• Flat, tap-off points at the bottom		IP54, increase to IP55 with additional equipment
• Flat, tap-off points at the top		IP50, increase to IP55 with additional equipment
Material		
• Trunking units		Galvanized, painted sheet steel
• Conductors		Al or Cu
• Pick-up and connection contacts		Cu, silver-plated
Mounting position		Edgewise or flat
Weights		See Selection and ordering data

Overload and short-circuit protection

Busbar trunking systems must be protected against overload and short circuits. Fuses and miniature circuit breakers must be selected so that the admissible current carrying capacity corresponding with the ambient conditions is not exceeded. For overload and short-circuit protection, we recommend the use of motor starter protectors or circuit breakers.

Tap-off units

Type		BD01-AK...
Version		3- or 5-pole
Rated current I_n	A	63
Switching capacity of the built-in switch disconnector according to IEC/EN 60947-3 at 400 V		
• Utilization category		AC-20B

Feeding and tap-off units, conductor cross-sections (geometric)

Version	Type	L1, L2, L3		N		PE	
		min. mm²	max. mm²	min. mm²	max. mm²	min. mm²	max. mm²
Feeding units	BD01-E	6 (so, st)	50 (st)	6 (so, st)	50 (st)	6 (so, st)	50 (st)
	BD01-160-E	25 (st)	95 (st)	25 (st)	95 (st)	16 (st)	50 (st)
Tap-off units	BD01-AK01X/ZS	0.75 (f, st)	10 (so, f, st)	0.75 (f, st)	10 (so, f, st)	0.75 (f, st)	10 (so, f, st)
	BD01-AK02X/ZS3	0.75 (f, st)	10 (so, f, st)	0.75 (f, st)	10 (so, f, st)	0.75 (f, st)	10 (so, f, st)
	BD01-AK02M0/A163	0.75 (so, st)	16 (so)	0.75 (f, st)	10 (so, f, st)	0.75 (f, st)	10 (so, f, st)
	BD01-AK02M0/A323	0.75 (so, st)	16 (so)	0.75 (f, st)	10 (so, f, st)	0.75 (f, st)	10 (so, f, st)
	BD01-AK1M1/A101	0.75 (so, st)	16 (so)	0.75 (so, f)	2.5 (so, f)	0.75 (so, f)	2.5 (so, f)
	BD01-AK1M1/A161	0.75 (so, st)	16 (so)	0.75 (so, f)	2.5 (so, f)	0.75 (so, f)	2.5 (so, f)
	BD01-AK1M1/A321	0.75 (so, st)	16 (so)	0.75 (so, f)	2.5 (so, f)	0.75 (so, f)	2.5 (so, f)
	BD01-AK1M1/A...	0.75 (so, st)	16 (so)	0.75 (f, st)	10 (so, f, st)	0.75 (so, st)	16 (so)
	BD01-AK1M1/A...N	0.75 (so, st)	16 (so)	0.75 (so, st)	16 (so)	0.75 (so, st)	16 (so)
	BD01-AK1X/S14	0.5 (f, st)	4 (so)	0.75 (f, st)	10 (so, f, st)	0.75 (so, st)	16 (so)
	BD01-AK1X/S18	0.5 (f, st)	16 (so, f, st)	0.75 (f, st)	10 (so, f, st)	0.75 (so, st)	16 (so)
	BD01-AK1X/GB...	0.75 (so, st)	16 (so)	0.75 (f, st)	10 (so, f, st)	0.75 (so, st)	16 (so)
	BD01-AK2X/F1451	0.75 (so, st)	16 (so)	0.75 (f, st)	10 (so, f, st)	0.75 (so, st)	16 (so)
	BD01-AK2X/S27	0.75 (f, st)	10 (so, f, st)	0.75 (f, st)	10 (so, f, st)	0.75 (so, st)	16 (so)
	BD01-AK2HX/S33	1.5 (f, st)	16 (f, st)	0.75 (f, st)	16 (so, f, st)	0.75 (so, st)	16 (so, st)

f = finely stranded with end sleeve, so = solid, st = stranded

BD01 System – 40 ... 160 A

General data

Trunking units

Type			BD01-40	BD01-63	BD01-100	BD01-125	BD01-160
Conducting paths							
Rated insulation voltage U_i		V AC/DC	400/400	400/400	400/400	400/400	400/400
Rated operational voltage U_e		V AC	400	400	400	400	400
Frequency		Hz	50 ... 60	50 ... 60	50 ... 60	50 ... 60	50 ... 60
Rated current I_n		A	40	63	100	125	160
Impedance of conducting paths with 50 Hz and 20 °C busbar temperature							
• Resistance R_{20}		mΩ/m	3.960	1.936	0.938	0.910	0.578
• Reactance X_{20}		mΩ/m	0.280	0.324	0.286	0.300	0.273
• Impedance Z_{20}		mΩ/m	3.970	1.968	0.994	1.000	0.642
Impedance of conducting paths in event of a fault							
• AC resistance R_F		mΩ/m	5.991	4.128	2.841	2.420	2.189
• Reactance X_F		mΩ/m	1.396	1.248	1.186	0.940	0.973
• Impedance Z_F		mΩ/m	6.151	4.312	3.078	2.600	2.395
Zero sequence impedance acc. to IEC/EN 60909 (VDE 0102)							
• Resistance R_0	Phase to N	mΩ/m	15.904	7.911	4.115	3.810	3.167
• Reactance X_0	Phase to N	mΩ/m	2.128	2.058	1.797	1.630	1.656
• Impedance Z_0	Phase to N	mΩ/m	16.045	8.175	4.490	4.140	3.574
• Resistance R_0	Phase to PE	mΩ/m	10.086	8.565	6.648	5.430	5.343
• Reactance X_0	Phase to PE	mΩ/m	2.909	3.338	3.067	2.320	2.355
• Impedance Z_0	Phase to PE	mΩ/m	10.498	9.183	7.322	5.910	5.839
Short-circuit strength							
Rated peak withstand current I_{pk}		kA	2.55	6.30	15.30	15.30	15.30
Rated short-time withstand current I_{cw} (t = 1 s)		kA	0.58	1.15	2.50	2.50	2.50
Rated short-time withstand current I_{cw} (t = 0.1 s)		kA	1.70	4.20	9.00	9.00	9.00
Conductors							
Number of active conductors			4	4	4	4	4
Conductor cross-section							
• L1, L2, L3		mm^2	7.9	15.7	34.1	34.1	34.1
• N		mm^2	7.9	15.7	34.1	34.1	34.1
• PE (enclosure) ≙ Cu		mm^2	20.0	20.0	20.0	20.0	20.0
Conductor material			Al	Al	Al	Al	Cu
Fire load		kWh/m	0.76	0.76	0.76	0.76	0.76
Max. thermal load, I^2t-Wert		$A^2s \times 10^6$	0.29	1.76	8.10	8.10	8.10
Max. fixing distances at normal mechanical load		m					
• Edgewise		m	3	3	3	3	3
• Flat		m	1.5	1.5	1.5	1.5	1.5
• Flat with BD01-BAP		m	3	3	3	3	3

Selection and ordering data

Version	Rated current I_n	Length	Tap-off points		SD	Type	Article No.	PS*/ P. unit	Weight per unit approx.
			Number	Spacing					
	A	m		m	d				kg
Trunking units									
Straight trunking unit with joint block Sheet-steel enclosure, color similar to RAL 7035 (light gray), codable tap-off points	40	3	6	0.5	X	**BD01-40-3-0,5**	**BVP:034253**	1 unit	4.350
			3	1	X	**BD01-40-3-1**	**BVP:233551**	1 unit	4.350
		2	4	0.5	X	**BD01-40-2-0,5**	**BVP:034254**	1 unit	3.000
			2	1	X	**BD01-40-2-1**	**BVP:233552**	1 unit	3.000
	63	3	6	0.5	X	**BD01-63-3-0,5**	**BVP:034255**	1 unit	4.600
			3	1	X	**BD01-63-3-1**	**BVP:233553**	1 unit	4.600
		2	4	0.5	X	**BD01-63-2-0,5**	**BVP:034256**	1 unit	3.200
			2	1	X	**BD01-63-2-1**	**BVP:233555**	1 unit	3.200
	100	3	6	0.5	X	**BD01-100-3-0,5**	**BVP:034257**	1 unit	5.200
			3	1	X	**BD01-100-3-1**	**BVP:233556**	1 unit	5.200
		2	4	0.5	X	**BD01-100-2-0,5**	**BVP:034258**	1 unit	3.600
			2	1	X	**BD01-100-2-1**	**BVP:233557**	1 unit	3.600
		1	2	0.5	X	**BD01-100-1-0,5**	**BVP:201965**	1 unit	2.000
	125	3	6	0.5	X	**BD01-125-3-0,5**	**BVP:090163**	1 unit	5.200
			3	1	X	**BD01-125-3-1**	**BVP:233559**	1 unit	5.200
		2	4	0.5	X	**BD01-125-2-0,5**	**BVP:090161**	1 unit	3.600
			2	1	X	**BD01-125-2-1**	**BVP:233560**	1 unit	3.600
	160	3	6	0.5	X	**BD01-160-3-0,5**	**BVP:090164**	1 unit	8.000
			3	1	X	**BD01-160-3-1**	**BVP:233563**	1 unit	8.000
		2	4	0.5	X	**BD01-160-2-0,5**	**BVP:090162**	1 unit	5.400
			2	1	X	**BD01-160-2-1**	**BVP:233567**	1 unit	5.400

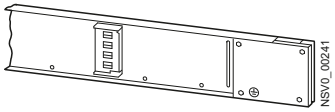

*** You can order this quantity or a multiple thereof.**

Selection and ordering data

Version	Rated current I_n	Length	SD	Type	Article No.	PS*/ P. unit	Weight per unit approx.
	A	m	d				kg
Junction units							
Flexible junction unit with joint block 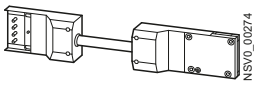	100	0.5	X	**BD01-R1**	**BVP:034260**	1 unit	1.200
		1	X	**BD01-R2**	**BVP:034261**	1 unit	2.050
	160	0.5	X	**BD01-160-R1**	**BVP:090166**	1 unit	1.750
		1	X	**BD01-160-R2**	**BVP:090167**	1 unit	3.050

Version	Rated current I_n	Conductor cross-section	SD	Type	Article No.	PS*/ P. unit	Weight per unit approx.
	A	mm^2	d				kg
Feeding units							
Molded-plastic enclosure, with 2 end flanges Can be fitted at all connection terminals and the busbar run ends, can be combined with BD01-GK... ancillary equipment units							
• 6 cable entries from 4 sides 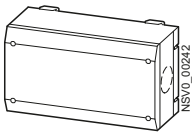	100	50 [1]	X	**BD01-E**	**BVP:034259**	1 unit	1.000
• Cable entry from 2 sides 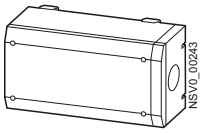	160	95 [2]	X	**BD01-160-E**	**BVP:090165**	1 unit	1.400

Use plastic cable glands with strain relief (not included in scope of supply).

[1] Use M32, M40 or M50 cable glands.

[2] Use M63 cable glands.

* You can order this quantity or a multiple thereof.

Selection and ordering data

Version	Rated current I_n	Rated operational voltage U_e	SD	Type	Article No.	PS*/ P. unit	Weight per unit approx.
	A	V	d				kg
Tap-off units, molded plastic, size 01							
With fuse base for 3 cylindrical fuses 10 mm × 38 mm 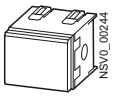	16	400	X	**BD01-AK01X/ZS**	**BVP:087483**	1 unit	0.300
Tap-off units, molded plastic, size 02							
With fuse base for 3 cylindrical fuses 10 mm × 38 mm 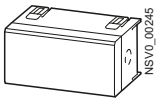	32	400	X	**BD01-AK02X/ZS3**	**BVP:085090**	1 unit	0.400
Tap-off units, molded plastic, size 02, with device installation unit							
With 3-pole miniature circuit breaker 16 A, characteristic B							
• Without socket outlet 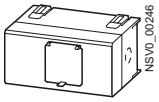	16	400	X	**BD01-AK02M0/A163**	**BVP:085089**	1 unit	0.800
• With 1 CEE socket outlet 16 A, 5-pole 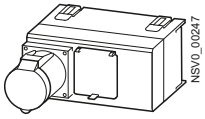	16	400	X	**BD01-AK02M0/ CEE165A163**	**BVP:085092**	1 unit	0.980
With 3-pole miniature circuit breaker 32 A, characteristic C 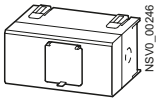	32	400	X	**BD01-AK02M0/A323**	**BVP:085094**	1 unit	0.800

Fuse links are not included in scope of supply.

Use plastic cable glands with strain relief (not included in scope of supply).

3

*** You can order this quantity or a multiple thereof.**

Tap-off units for international use

Version	Rated current I_n	Rated operational voltage U_e	SD	Type	Article No.	PS*/ P. unit	Weight per unit approx.
	A	V	d				kg
Tap-off units, molded plastic, size 02, with device installation unit							
With 1-pole miniature circuit breaker 16 A, characteristic B							
• with 2 Schuko socket outlets 16 A 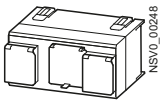	16	230	X	**BD01-AK02M0/ 2SD163A161**	**BVP:085096**	1 unit	0.700
• with 1 CEE socket outlet 16 A, 3-pole 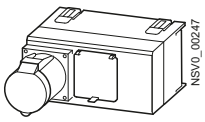	16	230	X	**BD01-AK02M0/ CEE163A161**	**BVP:090170**	1 unit	0.700
• With 2-pole residual current operated circuit breaker 16 A/30 mA and with 2 Schuko socket outlets 16 A 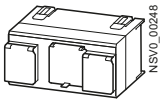	16	230	X	**BD01-AK02M0/ 2SD163FIA161**	**BVP:090168**	1 unit	0.950
With 1-pole fuse base D01							
• with 2 Schuko socket outlets 16 A 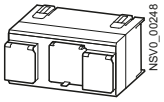	16	230	X	**BD01-AK02M0/ 2SD163S14**	**BVP:085095**	1 unit	0.800
• with 1 CEE socket outlet 16 A, 3-pole 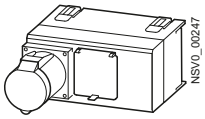	16	230	X	**BD01-AK02M0/ CEE163S14**	**BVP:090169**	1 unit	0.800
For free arrangement of components (P_v max. 13 W), 3 MW (MW = modular width), with integrated DIN rail 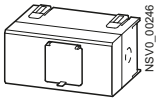	32	400	X	**BD01-AK02M0/F**	**BVP:085093**	1 unit	0.500

Adapter ring/screw adapter, fuse links and screw cap are not included in scope of supply.

Use plastic cable glands with strain relief (not included in scope of supply).

* You can order this quantity or a multiple thereof.

Version	Rated current I_n	Rated operational voltage U_e	SD	Type	Article No.	PS*/ P. unit	Weight per unit approx.
	A	V	d				kg
Tap-off units, aluminum, size 1							
With 1-pole fuse base D01							
• with 2 Schuko socket outlets 16 A 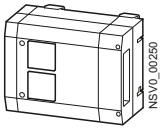	16	230	X	**BD01-AK1X/ 2SD163S14**	**BVP:034268**	1 unit	1.400
• with 1 CEE socket outlet 16 A, 3-pole 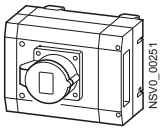	16	230	X	**BD01-AK1X/ CEE163S14**	**BVP:034270**	1 unit	1.380
With 3-pole fuse base 3 × D01 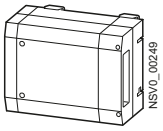	16	400	X	**BD01-AK1X/S14**	**BVP:034264**	1 unit	1.400
With 3-pole fuse base 3 × D02 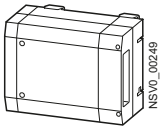	35	400	X	**BD01-AK1X/S18**	**BVP:034265**	1 unit	1.400
With 1-pole miniature circuit breaker 16 A, characteristic B							
• with 2 Schuko socket outlets 16 A 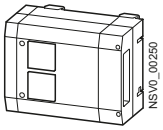	16	230	X	**BD01-AK1X/ 2SD163A161**	**BVP:034269**	1 unit	1.470
• with 1 CEE socket outlet 16 A, 3-pole 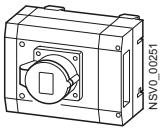	16	230	X	**BD01-AK1X/ CEE163A161**	**BVP:034271**	1 unit	1.435
For free arrangement of components (P_v max. 13 W), 4 MW (MW = modular width), with integrated DIN rail 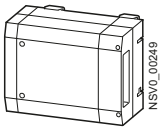	35	400	X	**BD01-AK1X/F**	**BVP:034272**	1 unit	1.000

Adapter ring/screw adapter, fuse links and screw cap are not included in scope of supply.

Use plastic cable glands with strain relief (not included in scope of supply).

*** You can order this quantity or a multiple thereof.**

Tap-off units for international use

Version	Rated current I_n	Rated operational voltage U_e	SD	Type	Article No.	PS*/ P. unit	Weight per unit approx.
	A	V	d				kg
Tap-off units, aluminum, size 1, with device installation unit							
With 3 x 1-pole miniature circuit breaker 10 A, characteristic B 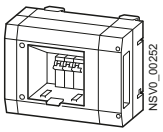	10	230	X	**BD01-AK1M1/A101**	**BVP:203098**	1 unit	1.600
With 3x 1-pole miniature circuit breaker 16 A, characteristic B 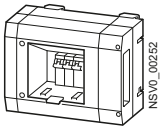	16	230	X	**BD01-AK1M1/A161**	**BVP:034266**	1 unit	1.600
With 3-pole miniature circuit breaker 32 A, characteristic C 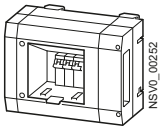	32	230	X	**BD01-AK1M1/A323**	**BVP:034267**	1 unit	1.600
For free arrangement of components (P_v max. 13 W), 4 MW (MW = modular width), with integrated DIN rail 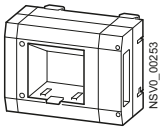	35	230	X	**BD01-AK1M1/F**	**BVP:034273**	1 unit	1.000

Use plastic cable glands with strain relief (not included in scope of supply).

*** You can order this quantity or a multiple thereof.**

Version	Rated current I_n	Rated operational voltage U_e	SD	Type	Article No.	PS*/ P. unit	Weight per unit approx.
	A	V	d				kg
Tap-off units, aluminum, size 2							
With 3-pole fuse base S27/S33 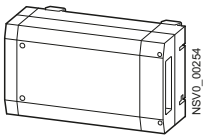							
• With 3-pole fuse base S27, screw adapter system	25	400	X	**BD01-AK2X/S27**	**BVP:034274**	1 unit	1.700
• With 3-pole fuse base S33, screw adapter system	63	400	X	**BD01-AK2HX/S33**	**BVP:233568**	1 unit	1.700
With 2 × 1-pole fuse base D01 and with 4 Schuko socket outlets 16 A 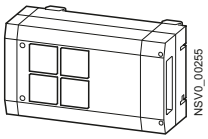	16	230	X	**BD01-AK2X/ 4SD163S14**	**BVP:034277**	1 unit	2.000
With 3 × 1-pole fuse base D01 and with 1 CEE socket outlet 16 A, 5-pole 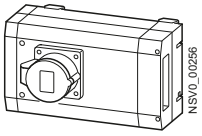	16	400	X	**BD01-AK2X/ CEE165S14**	**BVP:034279**	1 unit	1.850
With 3 × 1-pole fuse base D02 and with 1 CEE socket outlet 32 A, 5-pole 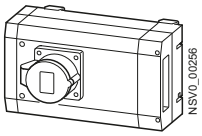	32	400	X	**BD01-AK2X/ CEE325S18**	**BVP:034281**	1 unit	2.000
With 2 × 1-pole miniature circuit breaker 16 A, characteristic B, and with 4 Schuko socket outlets 16 A 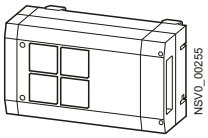	16	230	X	**BD01-AK2X/ 4SD163A161**	**BVP:034278**	1 unit	2.100
For free arrangement of components, 9 MW (MW = modular width), with integrated DIN rail 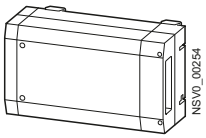							
• For free arrangement of components (P_v max. 16 W)	35	400	X	**BD01-AK2X/F**	**BVP:034283**	1 unit	1.300
• For free arrangement of components (P_v max. 22.5 W)	63	400	X	**BD01-AK2HX/F**	**BVP:233570**	1 unit	1.300

Adapter ring/screw adapter, fuse links and screw cap are not included in scope of supply.

Use plastic cable glands with strain relief (not included in scope of supply).

*** You can order this quantity or a multiple thereof.**

Tap-off units for international use

Version	Rated current I_n	Rated operational voltage U_e	SD	Type	Article No.	PS*/ P. unit	Weight per unit approx.
	A	V	d				kg
Tap-off units, aluminum, size 2, with device installation unit							
With 1-pole miniature circuit breaker 16 A, characteristic B, with 2-pole residual current operated circuit breaker 16 A/30 mA and with 2 Schuko socket outlets 16 A 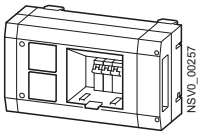	16	230	X	**BD01-AK2M1/ 2SD163-FIA161**	**BVP:034276**	1 unit	2.000
With 1-pole miniature circuit breaker 16 A, characteristic C, with 2-pole residual current operated circuit breaker 25 A/30 mA and with 1 CEE socket outlet 16 A, 3-pole 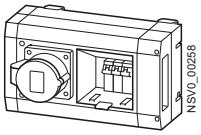	16	230	X	**BD01-AK2M1/ CEE163-FIA161**	**BVP:660867**	1 unit	2.000
With 3-pole miniature circuit breaker 16 A, characteristic C, with 4-pole residual current operated circuit breaker 25 A/30 mA and with 1 CEE socket outlet 16 A, 5-pole 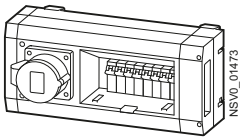	16	400	X	**BD01-AK2M2/ CEE165-FIA163**	**BVP:660866**	1 unit	3.500
With 3-pole miniature circuit breaker 16 A, characteristic C, and with 1 CEE socket outlet 16 A, 5-pole 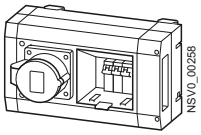	16	400	X	**BD01-AK2M1/ CEE165A163**	**BVP:034280**	1 unit	2.000
With 3-pole miniature circuit breaker 32 A, characteristic C, and with 1 CEE socket outlet 32 A, 5-pole 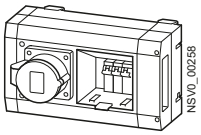	32	400	X	**BD01-AK2M1/ CEE325A323**	**BVP:034282**	1 unit	2.100
Freely assignable, 8 MW (MW = modular width), with integrated DIN rail 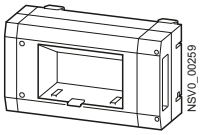							
• For free arrangement of components (P_v max. 16 W)	35	400	X	**BD01-AK2M2/F**	**BVP:034284**	1 unit	1.360
• For free arrangement of components (P_v max. 22.5 W)	63	400	X	**BD01-AK2HM2/F**	**BVP:233571**	1 unit	1.360

Use plastic cable glands with strain relief (not included in scope of supply).

*** You can order this quantity or a multiple thereof.**

Selection and ordering data

Version	Rated operational voltage U_e	SD	Type	Article No.	PS*/ P. unit	Weight per unit approx.
	V	d				kg
Ancillary equipment units, aluminum, size 1						
For free arrangement of components (P_v max. 13 W), 4 MW (MW = modular width), with integrated DIN rail Can be used for • Overvoltage protection • Remote control/remote switching • Intelligence 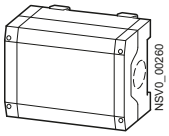	400	X	**BD01-GK1X/F**	**BVP:034285**	1 unit	0.800
With 4 Schuko socket outlets 16 A 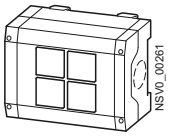	400	X	**BD01-GK1X/4SD163**	**BVP:034287**	1 unit	1.200
With 1 CEE socket outlet 16 A, 3-pole 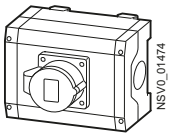	400	X	**BD01-GK1X/CEE163**	**BVP:660808**	1 unit	0.950
With 1 CEE socket outlet 16 A, 5-pole 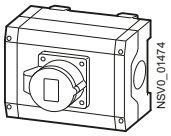	400	X	**BD01-GK1X/CEE165**	**BVP:660809**	1 unit	1.000
With 1 CEE socket outlet 32 A, 5-pole 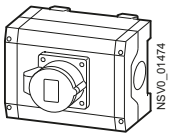	400	X	**BD01-GK1X/CEE325**	**BVP:660810**	1 unit	1.040
Ancillary equipment units, aluminum, size 1, with device installation unit						
For free arrangement of components (P_v max. 13 W), 4 MW (MW = modular width), with integrated DIN rail Can be used for • Remote control/remote switching • Intelligence • Device installation unit for installing devices, e.g. miniature circuit breakers 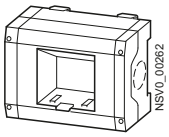	400	X	**BD01-GK1M1/F**	**BVP:034286**	1 unit	0.800

Ancillary equipment units are supplied with the cable gland for enclosure connection.

Use plastic cable glands with strain relief (not included in scope of supply).

3

*** You can order this quantity or a multiple thereof.**

Ancillary equipment units for international use

Version	Rated operational voltage U_e	SD	Type	Article No.	PS*/ P. unit	Weight per unit approx.
	V	d				kg
Ancillary equipment units, aluminum, size 2						
For free arrangement of components (P_v max. 16 W), 9 MW (MW = modular width), with integrated DIN rail Can be used for • Overvoltage protection • Remote control/remote switching • Intelligence 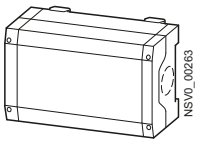	400	X	**BD01-GK2X/F**	**BVP:034288**	1 unit	1.100
With 2 Schuko socket outlets 16 A and 1 CEE socket outlet 16 A, 5-pole 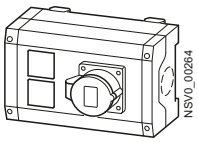	400	X	**BD01-GK2X/ 2SD163-CEE165**	**BVP:034291**	1 unit	1.600
With 2 Schuko socket outlets 16 A and 1 CEE socket outlet 32 A, 5-pole 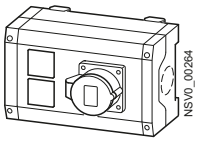	400	X	**BD01-GK2X/ 2SD163-CEE325**	**BVP:660811**	1 unit	1.800
With 1 CEE socket outlet 16 A, 3-pole, and 1 CEE socket outlet 16 A, 5-pole 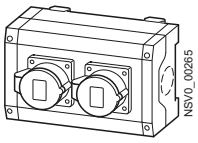	400	X	**BD01-GK2X/ CEE163-CEE165**	**BVP:034290**	1 unit	1.500
Ancillary equipment units, aluminum, size 2, with device installation unit						
For free arrangement of components (P_v max. 16 W), 9 MW (MW = modular width), with integrated DIN rail Can be used for • Remote control/remote switching • Intelligence • Device installation unit for installing devices, e.g. miniature circuit breakers 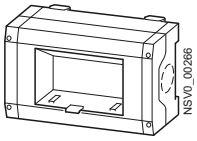	400	X	**BD01-GK2M2/F**	**BVP:034289**	1 unit	1.100

Ancillary equipment units are supplied with the cable gland for enclosure connection.

Use plastic cable glands with strain relief (not included in scope of supply).

* You can order this quantity or a multiple thereof.

Selection and ordering data

Version		SD	Type	Article No.	PS*/ P. unit	Weight per unit approx.
		d				kg
Additional equipment for degree of protection IP55						
For tap-off points		X	**BD01-FAS**	**BVP:610363**	5 units	0.100
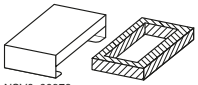 NSV0_00978						
For connection points		X	**BD01-FS**	**BVP:610362**	5 units	0.150
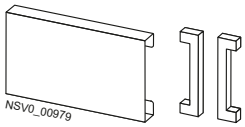 NSV0_00979						
For feeding units						
• Mounting position at the bottom		X	**BD01-FES**	**BVP:610364**	1 unit	0.150
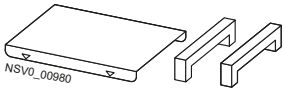 NSV0_00980						
• Mounting position at the side or top		X	**BD01-KS**	**BVP:611057**	1 unit	0.030
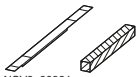 NSV0_00981						
For tap-off units						
• Size 01X, 02X	Size 01	X	**BD01-AK01X-IP55**	**BVP:610365**	1 unit	0.050
	Size 02	X	**BD01-AK02X-IP55**	**BVP:610366**	1 unit	0.050
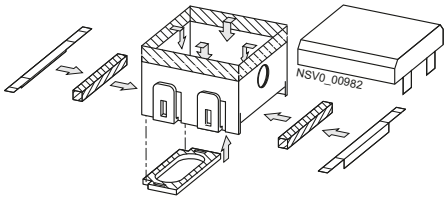 NSV0_00982						
• Size 1X, 2X	Size 1	X	**BD01-AK1X-IP55**	**BVP:610367**	1 unit	0.050
	Size 2	X	**BD01-AK2X-IP55**	**BVP:610368**	1 unit	0.050
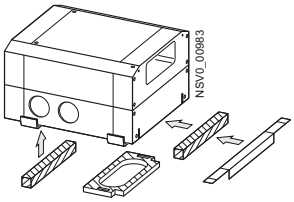 NSV0_00983						

3

* You can order this quantity or a multiple thereof.

Additional equipment

Version	Rated current I_n	SD	Type	Article No.	PS*/ P. unit	Weight per unit approx.
	A	d				kg
Fixing						
Universal fixing brackets 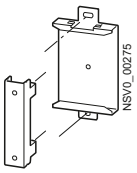	--	X	**BD01-B**	**BVP:034262**	1 unit	0.167
Suspension brackets 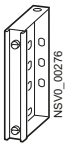	--	X	**BD01-BA**	**BVP:081945**	1 unit	0.167
Hanger brackets • For suspension by cable or pendant chain • At the connection point 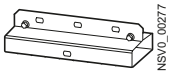	--	X	**BD01-BAP**	**BVP:203522**	1 unit	0.576
Mounting parts						
End flanges 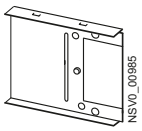	--	X	**BD01-EF**	**BVP:611071**	1 unit	0.300
Joint blocks 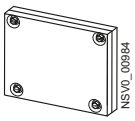	100	X	**BD01-100-KB**	**BVP:201966**	1 unit	0.350
	160	X	**BD01-160-KB**	**BVP:201967**	1 unit	0.350
Coding						
Coding sets • 4 coding positions 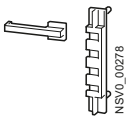	--	X	**BD01-K**	**BVP:034263**	10 units	0.010
Fire barriers						
Fire barrier kits For mounting by the customer with fire barrier plates and fixing screws 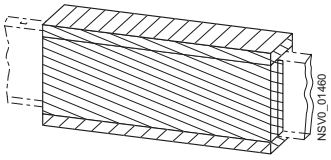	--	X	**BD01-S90**	**BVP:611354**	1 unit	1.500
Fire barrier approval kit (required only for Germany[1])	--	X	**BD01-S90-ZUL-D**	**BVP:611373**	1 unit	0.200

[1] Approval papers for Europe available soon

3

* You can order this quantity or a multiple thereof.

Overview

Specimen text for tenders

Item	Quantity	Description	Unit price		Amount	
	... m	Busbar trunking system (see Appendix for diagram) • As design-verified low-voltage switchgear and controlgear assembly according to IEC/EN 61439-1 and -6 • Rated current, corresponds to thermal rated current at max. +40 °C and +35 °C in the 24-hour average for indoor installation • Rated insulation voltage U_i = 400 V AC, 400 V DC • Rated operational voltage ...V, ...Hz • Rated peak withstand current of busbar trunking system, ... kA tested according to IEC/EN 61439-1 and -6 • Degree of protection IP54 with tap-off points at sides and bottom, otherwise IP50; increase to IP55 with additional equipment • 5-conductor configuration: L1, L2, L3, N, PE • Busbars: silver-plated copper connection and pick-up contacts; aluminum or copper conducting paths; supported by insulated busbar supports • Trunking units sheet-steel enclosed, galvanized and with paint finish; color: light gray, RAL 7035 • Halogen-free • Busbar connection via joint block with built-in expansion compensation • Tap-off points on one side, every 0.5 m or 1 m • Supplied ready for connection with all assembly parts • Made by Siemens • Type BD01-... Comprising:				

Design

Fixing

Wall or ceiling mounting with BD01-B

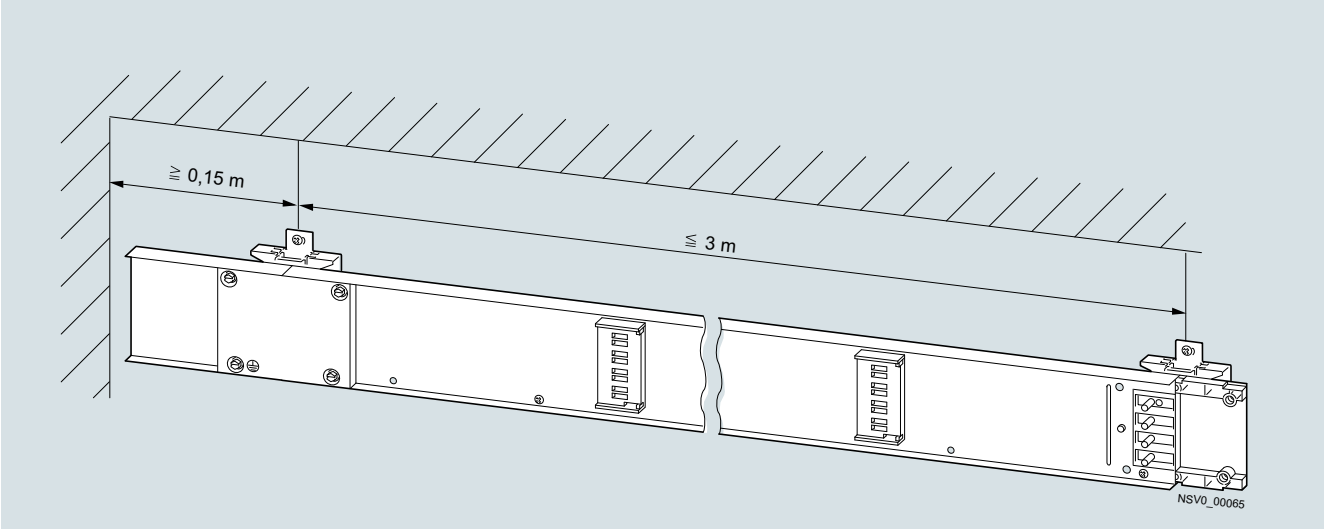

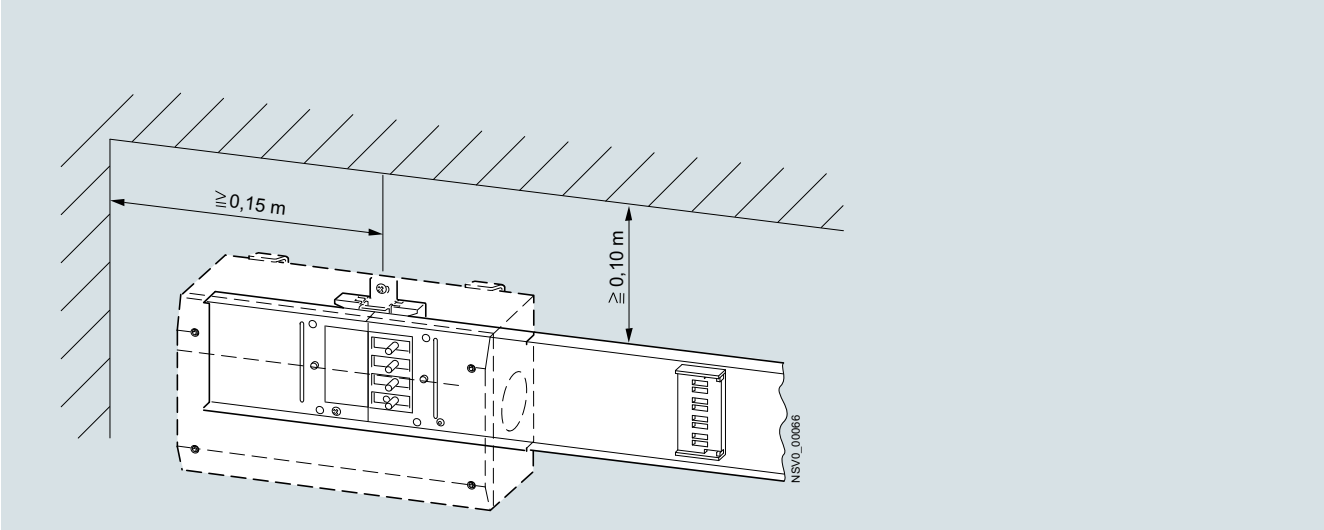

Pendent suspension using BD01-BAP (at connection point)

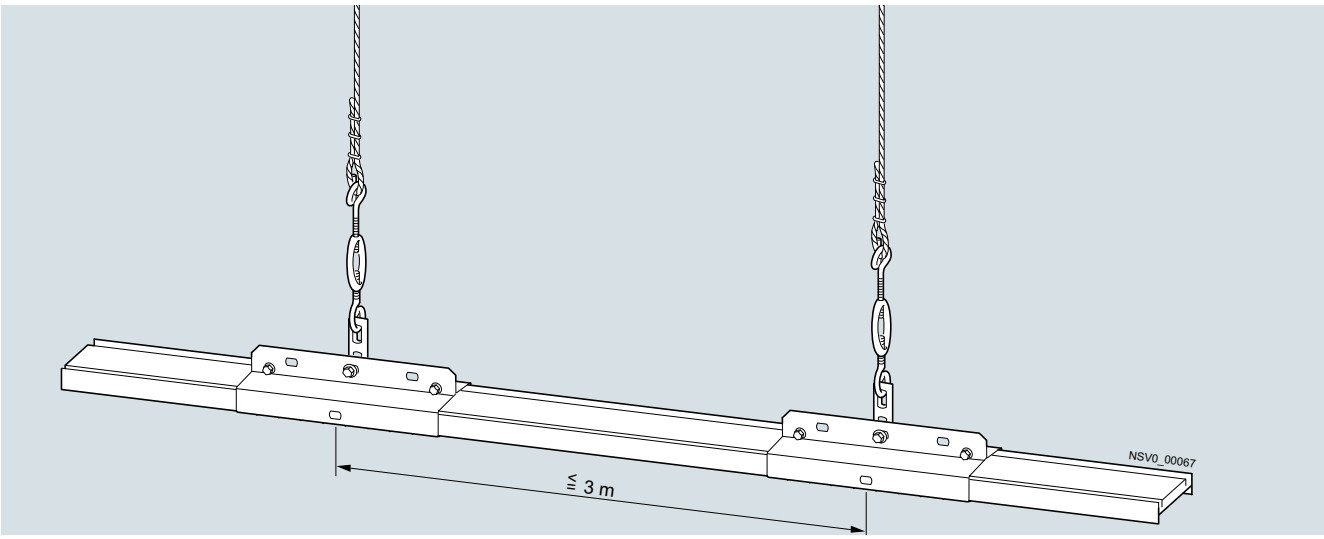

Mounting examples with BD01-B and BD01-BA

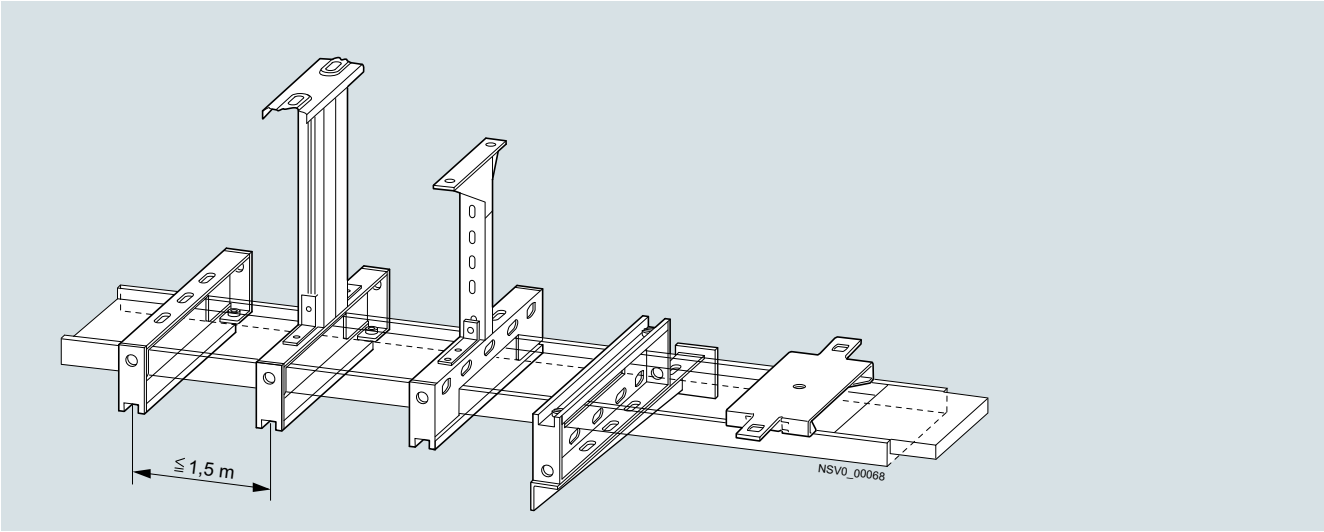

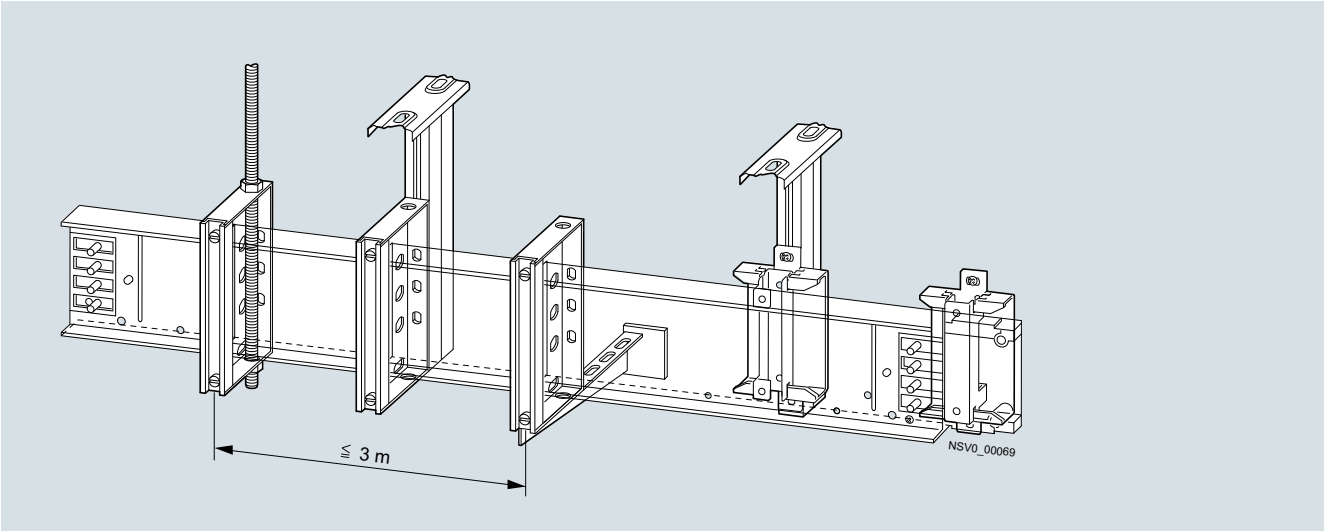

Function

Required details

The following data must be considered when configuring the busbar runs:

- Position, direction, number, type and approximate connected loads of the consumers, cos φ.
- Rated diversity factor α.
- If data are not available, use only the rated diversity factor
- Feeding transformers (short-circuit current)
- Nature of the installation site (dimensions, construction of the building, transport paths, cellar)
- Routing of supply lines from other power sources
- Crane operation
- Special requirements

Operational current

The operational current is calculated using the following formula:

$$I_B = \frac{P_{inst} \times \alpha \times b}{\sqrt{3} \times U_e \times \cos\varphi} \times 10^3$$

with:

I_B	=	Operational current	(A)
P_{inst}	=	Installed power	(kW)
α	=	Rated diversity factor	
b	=	Supply factor	
		b = 1 = Single feeding unit	
		b = ½ = Double end feeding unit	
U_e	=	Rated operational voltage	(V)
cos φ	=	Power factor (p.f.)	

If no data are available about the actual currents occurring simultaneously, the following values according to IEC/EN 60439-1 or IEC/EN 61439-1 apply:

Number of main circuits	Rated diversity factor α
2 and 3	0.9
4 and 5	0.8
6 to 9 inclusive	0.7
10 and more	0.6

Short-circuit protection

A system can be protected against short-circuit alone by fitting low-voltage LV HRC fuses (gL) into the incoming supply; the fuse size to be appropriate for the prospective short-circuit current at the place of installation.

Overcurrent protection devices for overload and short-circuit protection

Busbar trunking systems must be protected against overload and short circuits. Fuses and miniature circuit breakers must be selected so that the admissible current carrying capacity corresponding with the ambient conditions is not exceeded.

Due to their high response threshold (1.3 to 1.6 times rated current) and their long rupturing times at small overcurrents, fuses are not suitable for overload protection. Therefore we recommend the use of motor starter protectors or circuit breakers.

The following can be used:

System	Overcurrent protective devices	
	Root for article number	Rated conditional short-circuit current
BD01-40	5SY4 . 40-6[1)]	I_{cc} = 2.7 kA
BD01-63	5SY4 . 63-6[1)]	I_{cc} = 10 kA
BD01-100	3VA1110	I_{cc} = 14 kA
BD01-125	3VA1112	I_{cc} = 14 kA
BD01-160	3VA1116	I_{cc} = 14 kA

1) For 5SY miniature circuit breakers, the following can be selected alternatively:
"5SY3..." or "5SY6..." or "5SY7..." with I_{cu} = 10 kA, 6 kA, 15 kA
" . " fittable according to the number of poles: 3 or 4
"-6" at the root end for characteristic B or "-7" for characteristic C

The prospective network short-circuit current and the let-through characteristic of the breakers must be taken into account in each case.

Temperature characteristic of BD01 systems

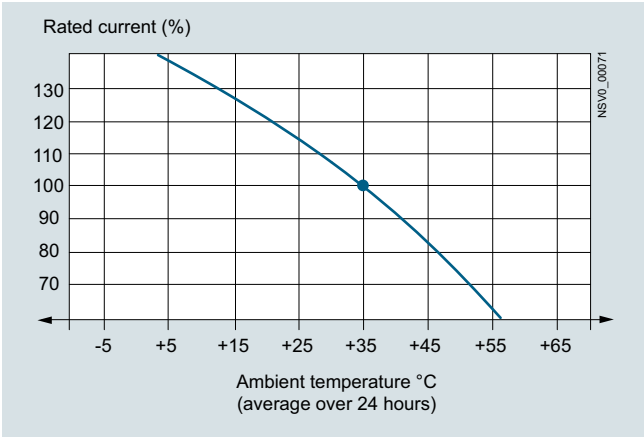

Voltage drop

Voltage drop at rated current

(Load distribution factor a = 1)

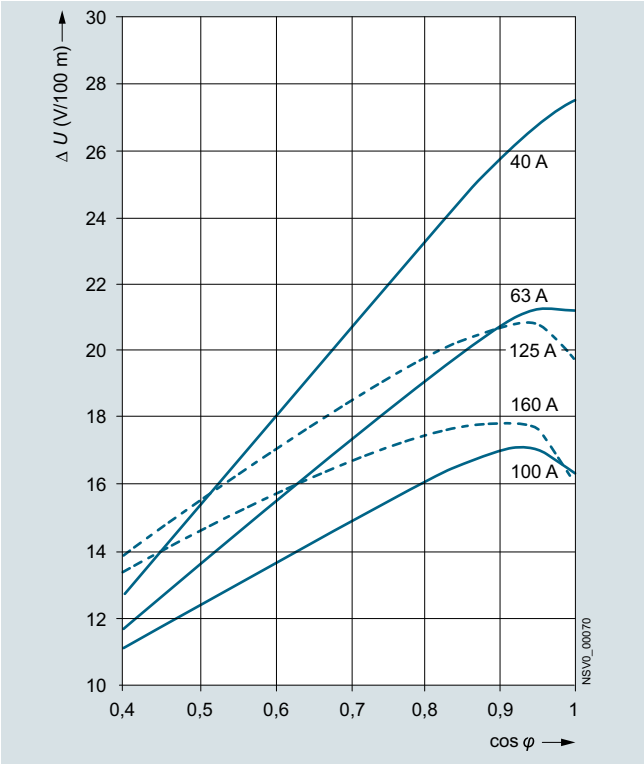

Calculation of the voltage drop

For long busbar runs, it may be necessary to calculate the voltage drop.

$$\Delta U = a \times \sqrt{3} \times I_B \times l \times (R \times \cos\varphi + X \times \sin\varphi) \times 10^{-3} \quad \text{(V)}$$

with

ΔU	=	Voltage drop	(V)
I_B	=	Operational current	(A)
l	=	Length	(m)
a	=	Load distribution factor	see table
R	=	Ohmic resistance R_{20}	(mΩ/m)
X	=	Inductive resistance X_{20}	(mΩ/m)
cos φ	=	Power factor (p.f.)	

Factor a used in the equation for calculating the voltage drop is dependent on the load distribution.

Load distribution		Factor a
A → B	Infeed at A, one outgoing unit at B	1
A → B C D E	Infeed at A, outgoing units at B, C, D, E	0.5
B A C	Infeed at A, outgoing units at B, C	0.25
B D A E C	Infeed at A, outgoing units at B, C, D, E	0.125
A → ← B C D E F	Infeed at A, B, outgoing units at C, D, E, F	0.25

Fire barrier

General requirements

The German state building authorities demand that buildings are designed so that "spreading of fire and smoke is prevented, and that effective fire fighting and rescue of persons and domestic animals is facilitated". Fire or flue gas may not spread from one floor or fire area to another.

All BD01 busbar trunking systems can be equipped with a fire barrier and generally comply with the standards for buildings including high-rise buildings.

The fire resistance class corresponds to S 90 according to DIN 4102 Part 9 (in future EI 90 according to EN 1366-3). The demands for verification of the fire resistance duration of 90 minutes according to ISO 834 as required by IEC/EN 60439-2 are fulfilled.

Configuration

To ensure the fire barrier function according to S 90 or EI 90, the following points must be observed when configuring and installing trunking units with fire barriers:

- The center of the fire barrier in the trunking unit must be positioned in the center of the fire wall
- There are no tap-off points in the area covered by the fire barrier
- The trunking units must be installed by an approved fire barrier installation specialist
- Fire barriers for installation in lightweight walls are available on request

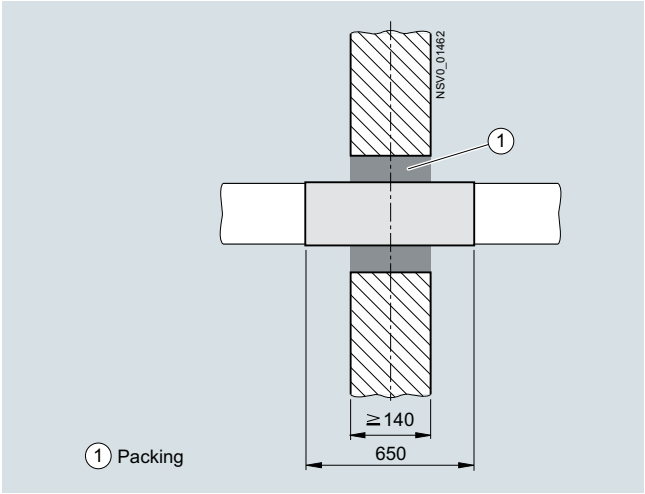

Positioning in the fire wall

Observe the following when installing the trunking units:

- Mounting of the fire barrier part on the busbar trunking element by the customer (see pages 3/22 and 3/39)
- The opening ① between the busbar trunking element and the building element must be filled with mineral-based mortar or fire barrier sealant
- The mortar or fire barrier sealant must conform to the applicable regulations for establishing fire resistance class or the construction of the wall or ceiling
- The installation must be carried out according to the specifications on the approval papers. The approval papers can be ordered separately

Dimensional drawings

Trunking units

BD01-...

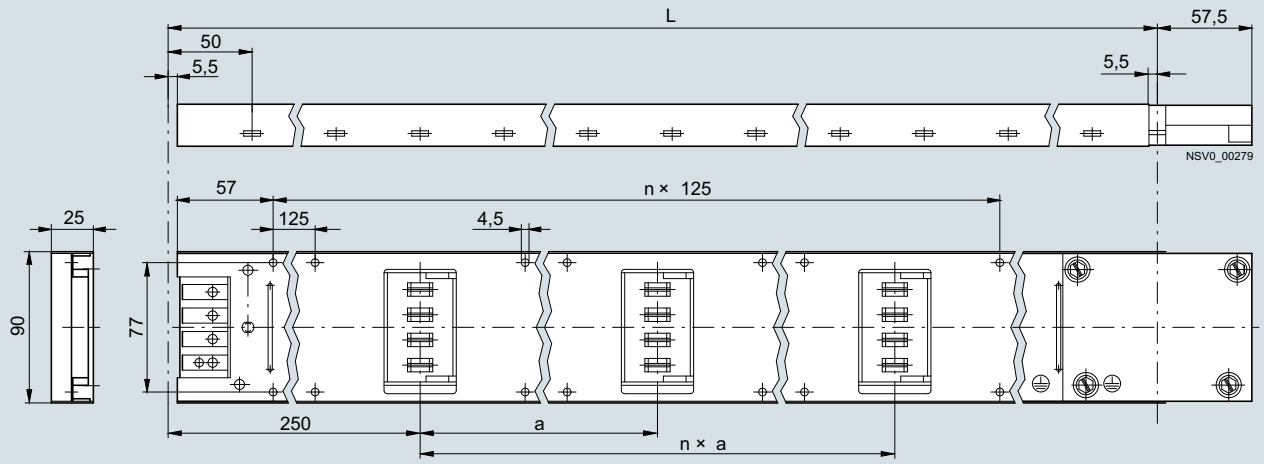

L	a	Number of tap-off points
2000	500	4
	1000	2
3000	500	6
	1000	3

Junction units

BD01(-160)-R1, BD01(-160)-R2

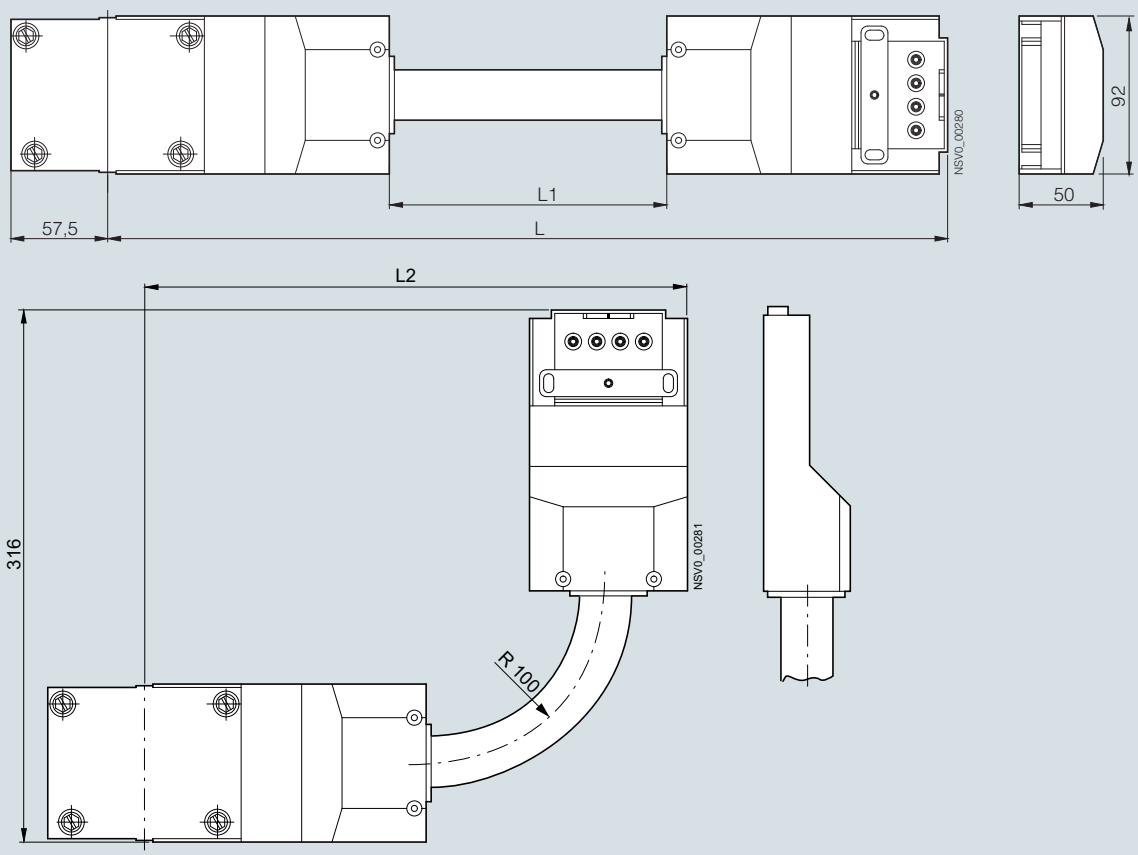

Type	L	L1	L2
BD01-...-R1	500	165	316
BD01-...-R2	1000	665	–

Feeding units

BD01-E

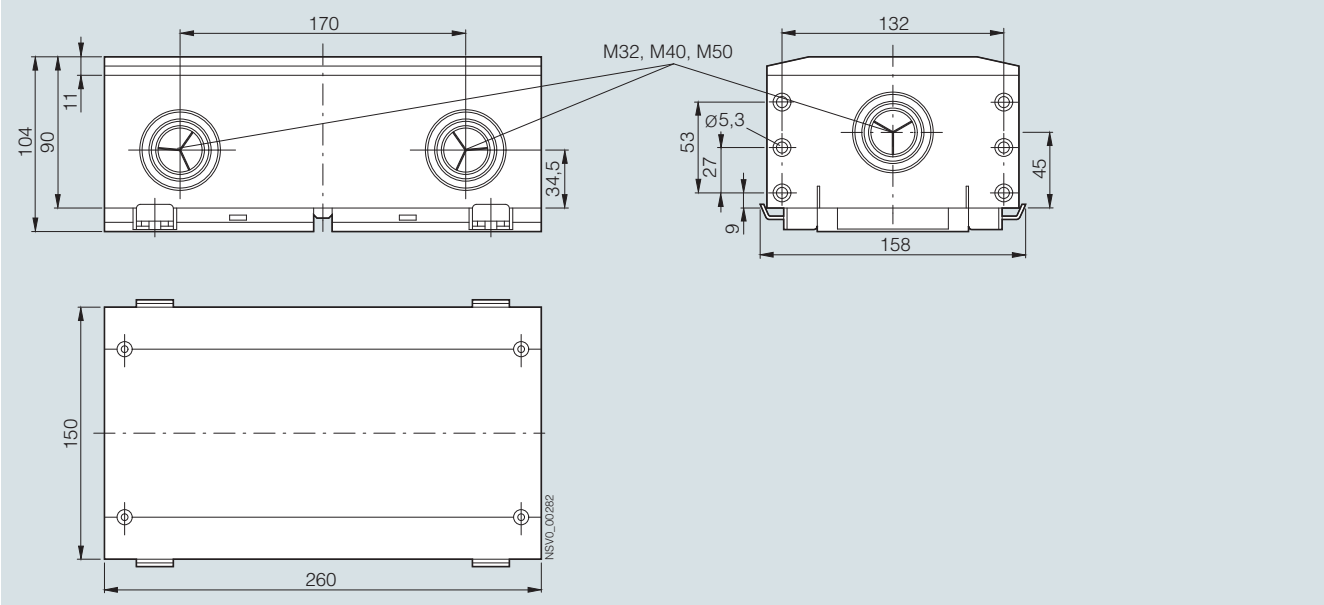

BD01-160-E

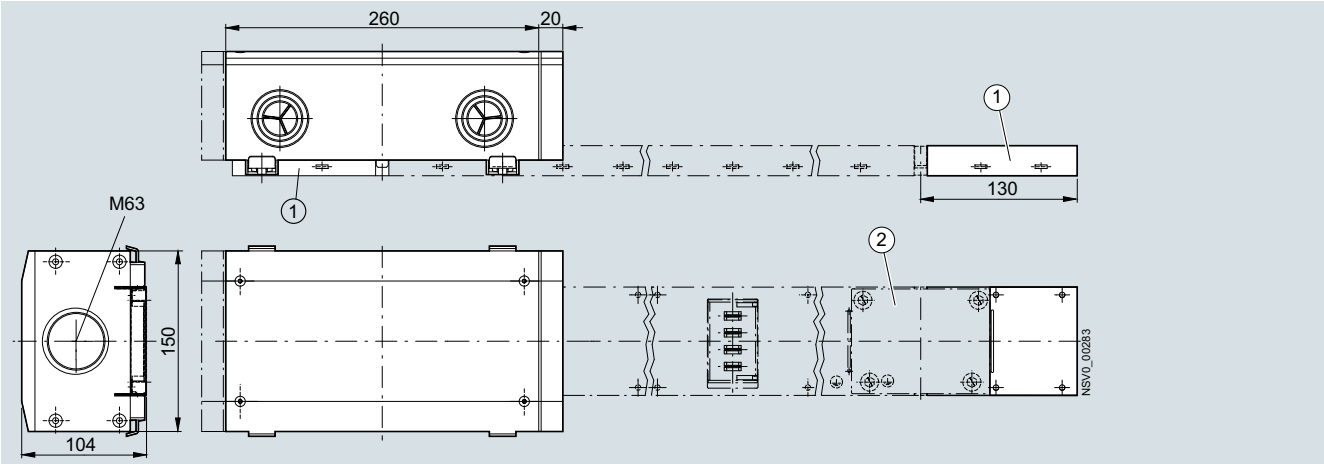

(1) BD01-EF end flange
(2) BD01-...-KB joint block

Configuration aids

Tap-off units

Tap-off units size 01

BD01-AK01X/ZS

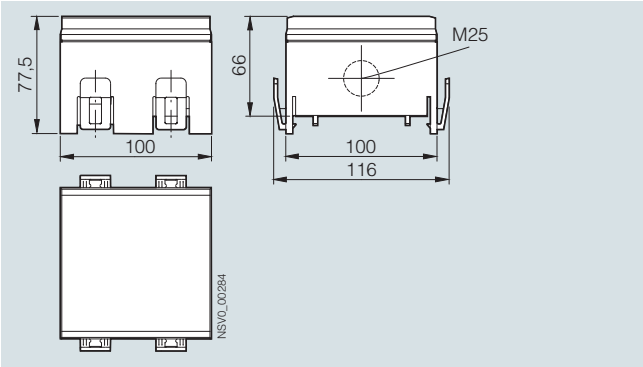

Tap-off units size 02

BD01-AK02X/ZS3

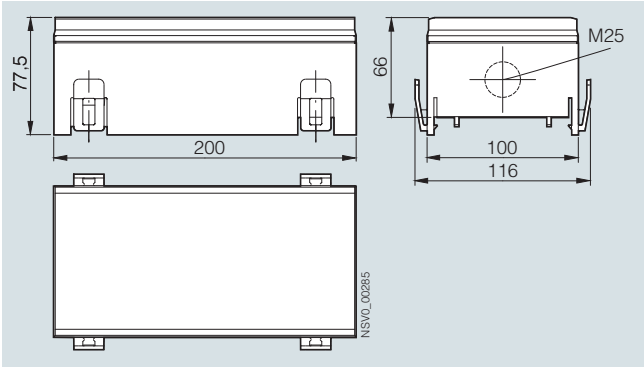

Tap-off units size 02, with device installation unit

BD01-AK02M0/A163
BD01-AK02M0/A323
BD01-AK02M0/F

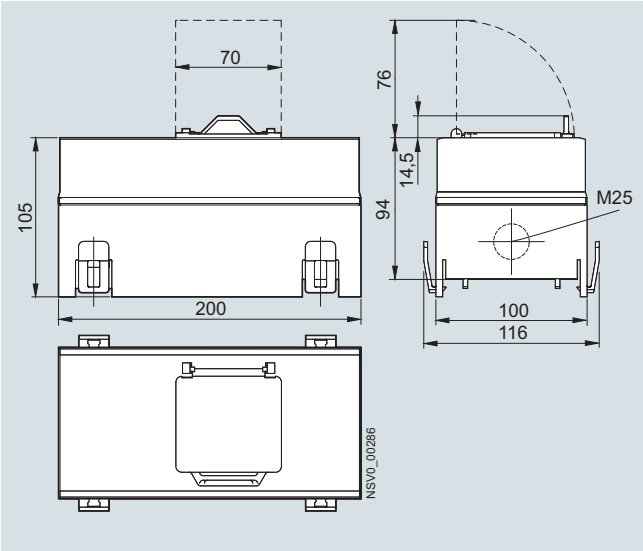

BD01-AK02M0/2SD163S14
BD01-AK02M0/2SD163A161
BD01-AK02M0/2SD163FIA161

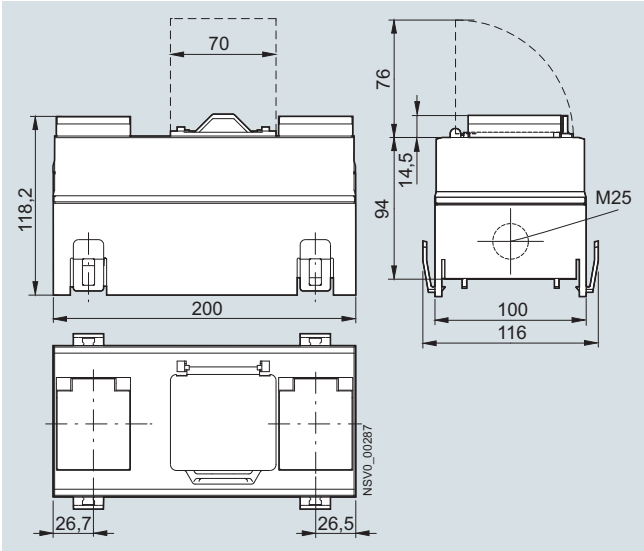

BD01-AK02M0/ CEE163S14
BD01-AK02M0/ CEE163A161

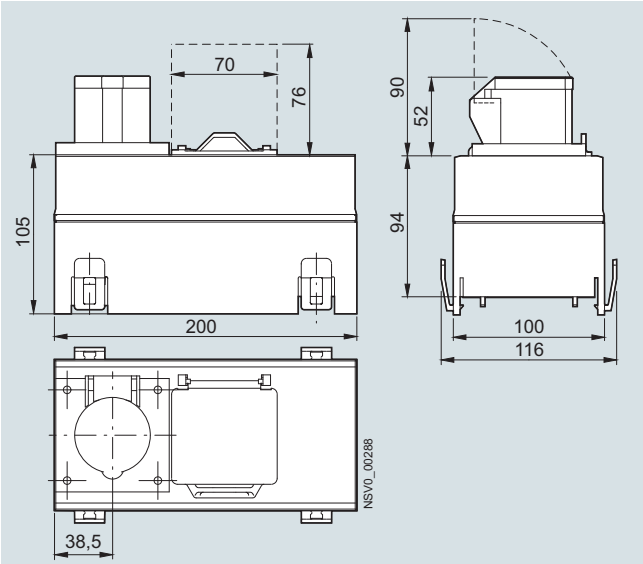

BD01-AK02M0/ CEE165A163

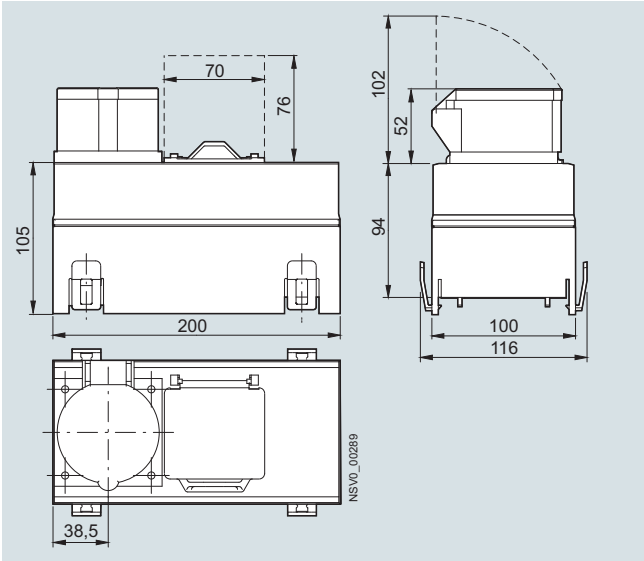

Dashed lines: free space for opening the flap

Tap-off units size 1

BD01-AK1X/S...
BD01-AK1X/F

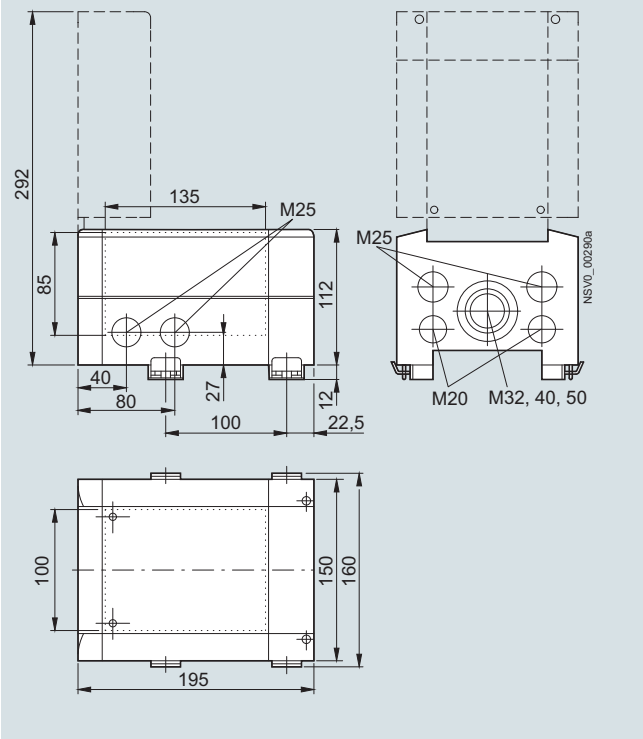

BD01-AK1X/2SD...

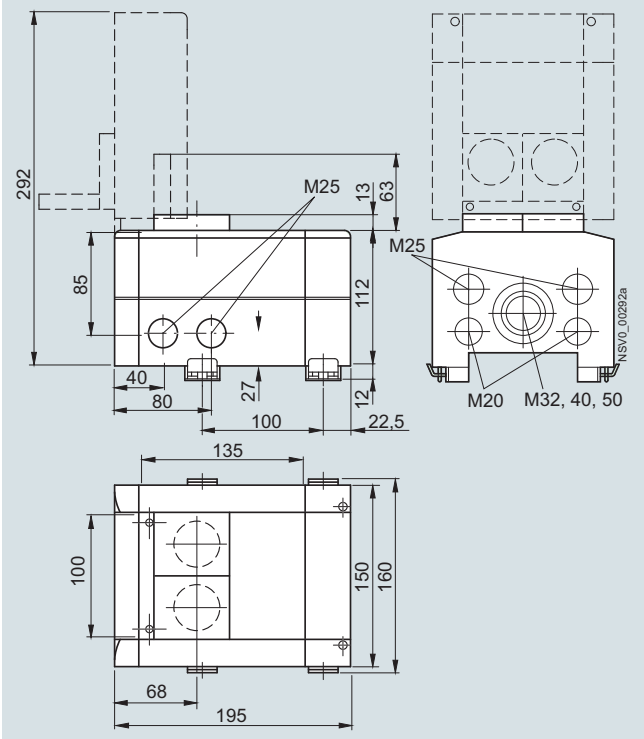

BD01-AK1X/CEE163...

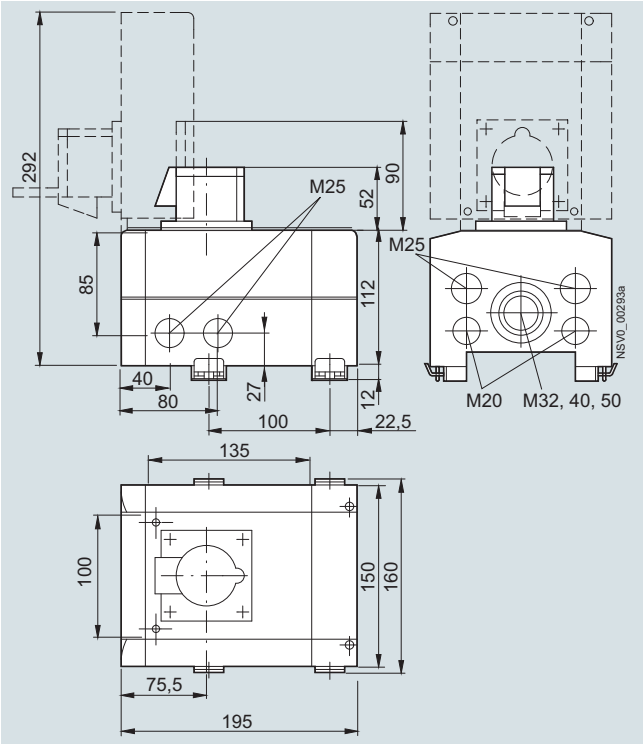

Tap-off units size 1, with device installation unit

BD01-AK1M1/A...
BD01-AK1M1/F

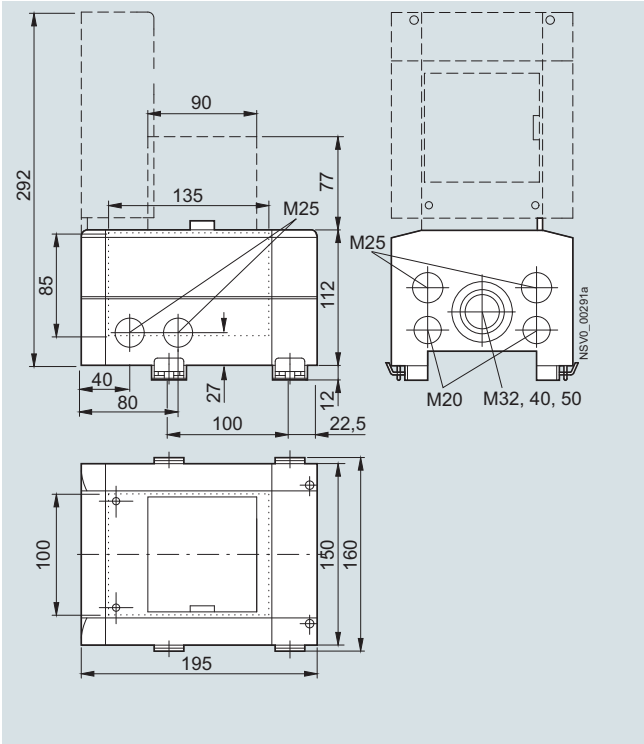

Dotted lines: usable component fitting space
Dashed lines: free space for opening the flap

Configuration aids

Tap-off units size 2

BD01-AK2X/F..., BD01-AK2HX/F...
BD01-AK2X/S..., BD01-AK2HX/S...

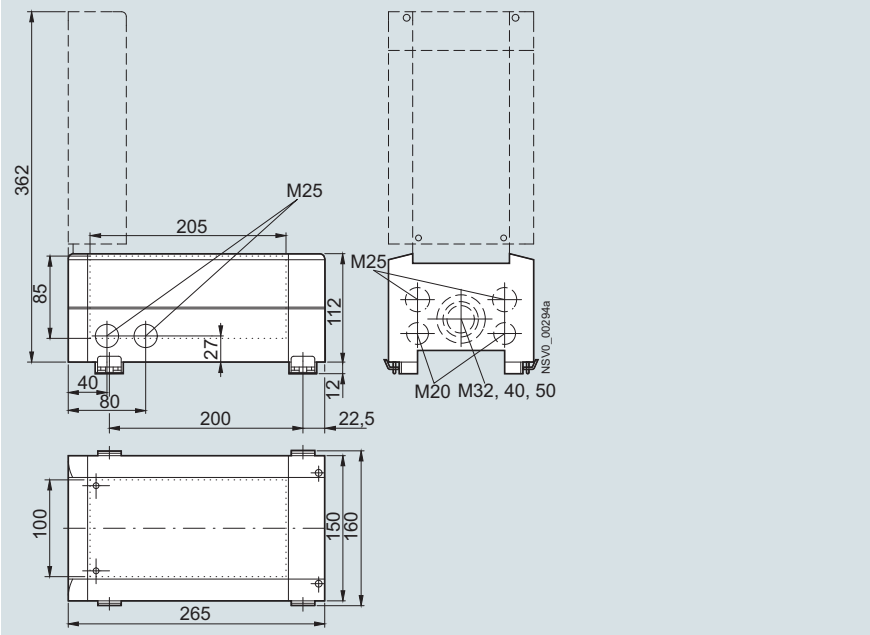

BD01-AK2X/4SD...

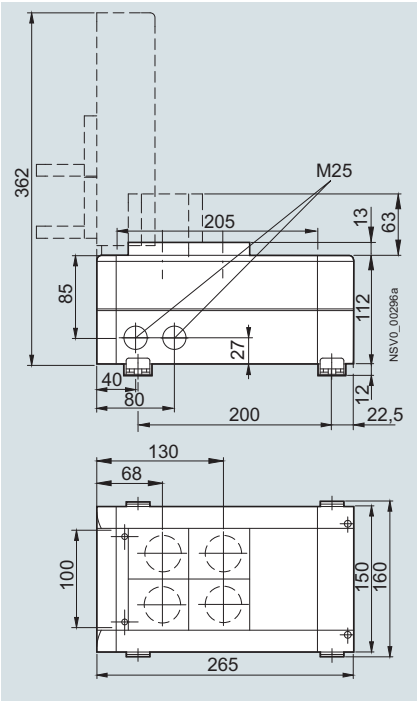

BD01-AK2X/CEE165...

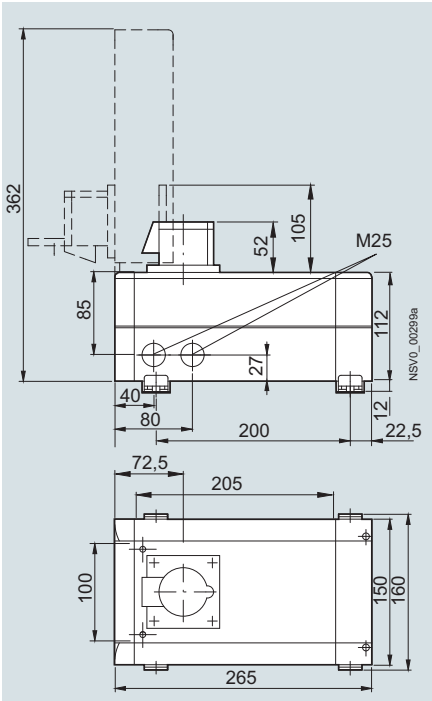

BD01-AK2X/CEE325...

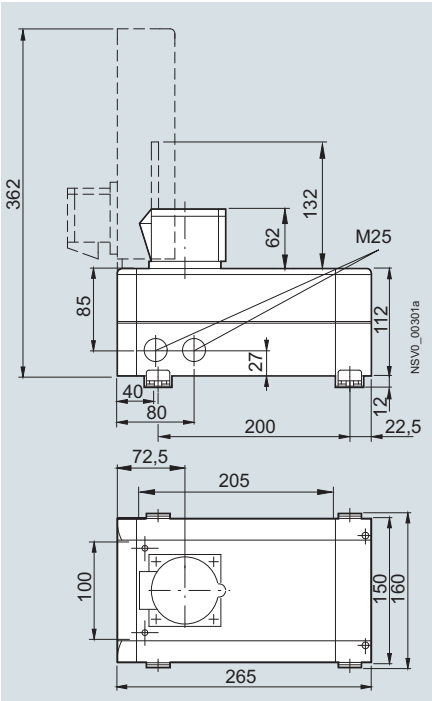

Dotted lines: usable component fitting space
Dashed lines: free space for opening the flap

Tap-off units size 2, with device installation unit

BD01-AK2M2/F, BD01-AK2HM2/F
BD01-AK2HM2/A...

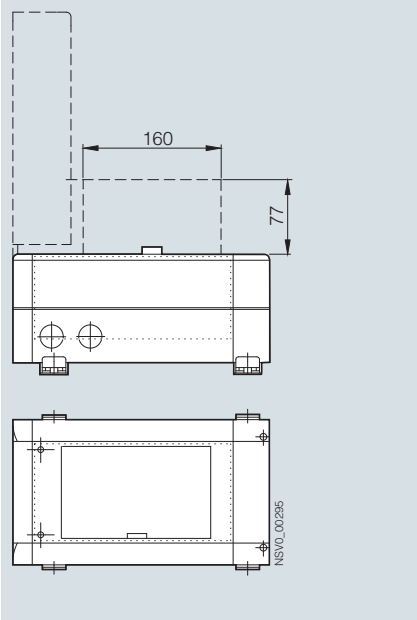

BD01-AK2M1/2SD...

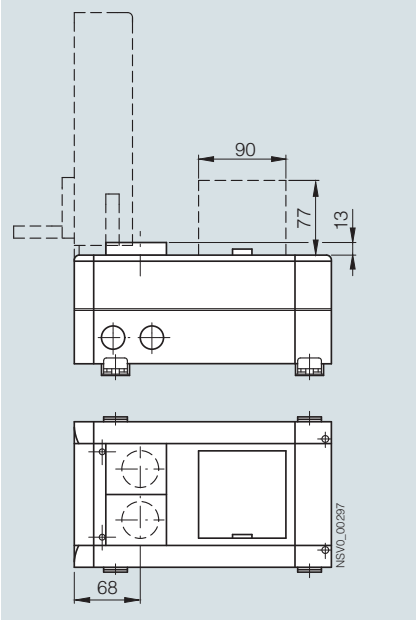

BD01-AK2M1/CEE163...,
BD01-AK2M1/CEE165...

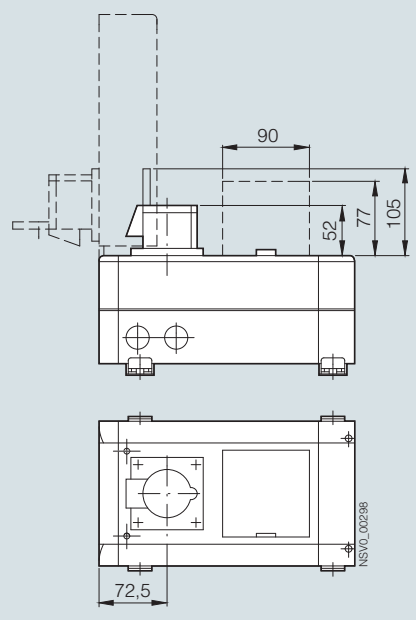

BD01-AK2M1/CEE325...

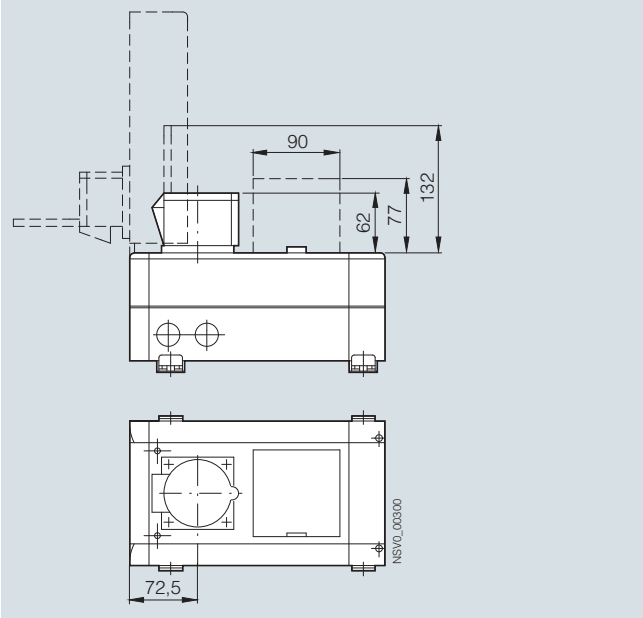

BD01-AK2M2/CEE165...

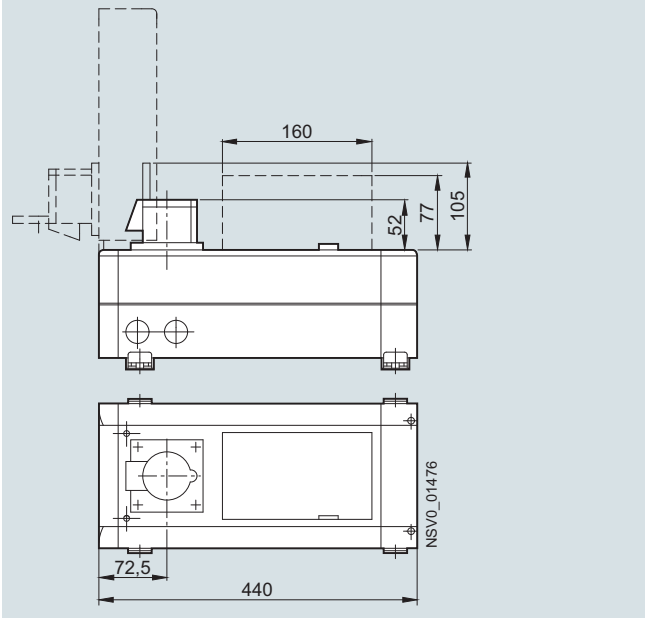

Dotted lines: usable component fitting space
Dashed lines: free space for opening the flap

Configuration aids

Ancillary equipment units

Ancillary equipment units size 1

BD01-GK1X/F

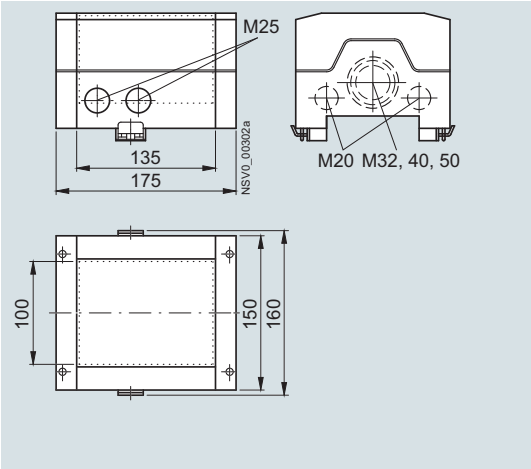

BD01-GK1X/4SD163

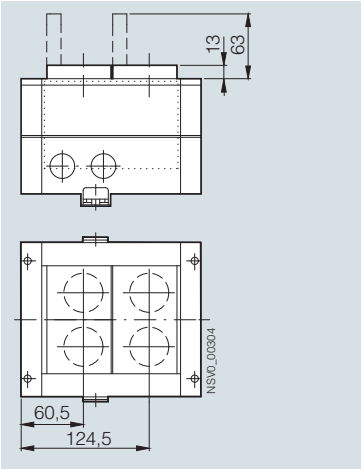

BD01-GK1X/CEE163
BD01-GK1X/CEE165

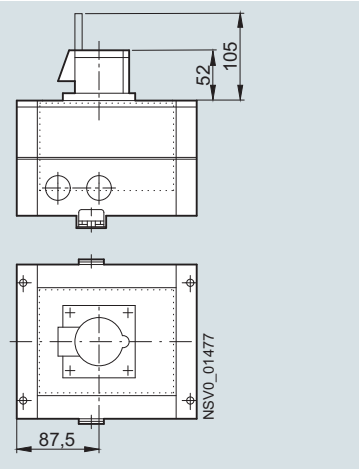

BD01-GK1X/CEE325

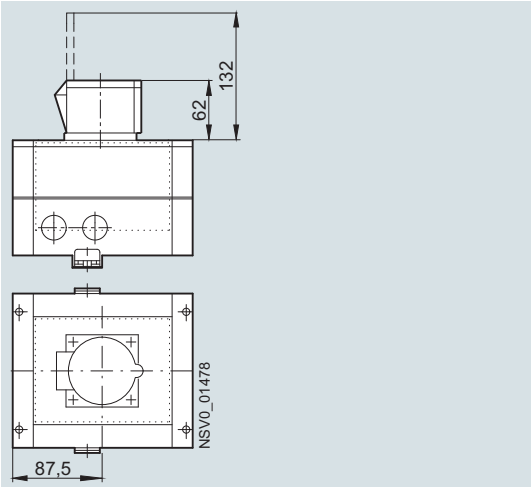

Ancillary equipment units size 1, with device installation unit

BD01-GK1M1/F

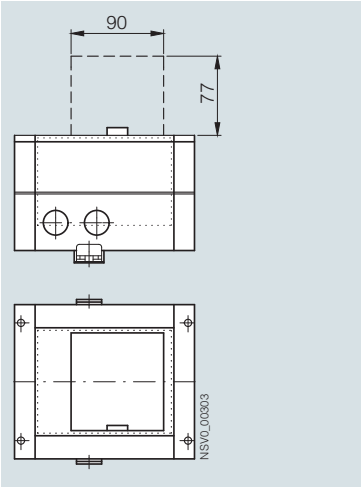

Dotted lines: usable component fitting space
Dashed lines: free space for opening the flap

Ancillary equipment units size 2

BD01-GK2X/F

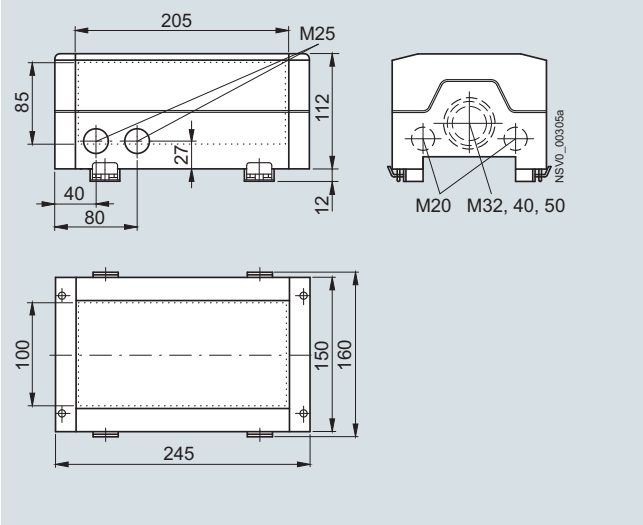

BD01-GK2X/ CEE163CEE165

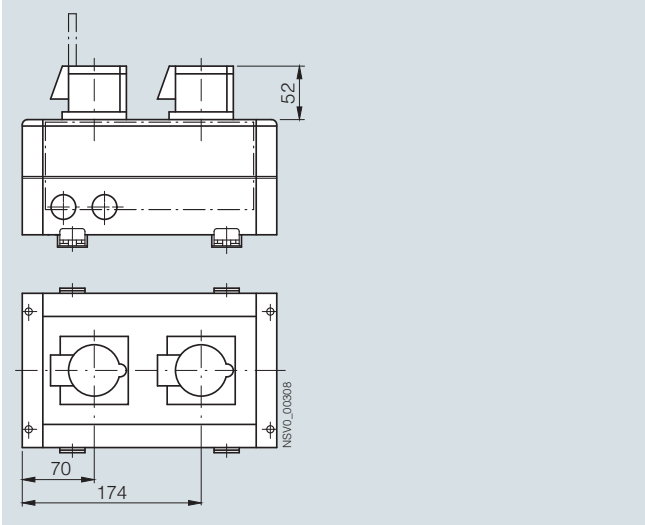

BD01-GK2X/ 2SD163CEE165

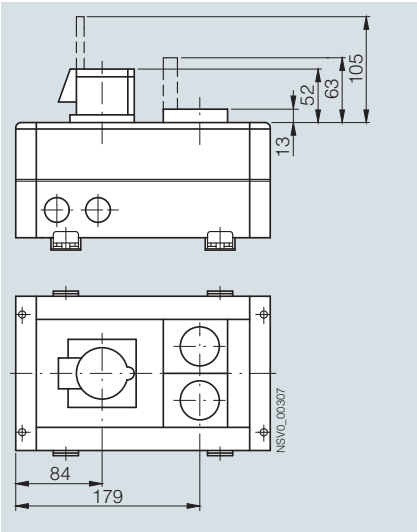

BD01-GK2X/2SD163CEE325

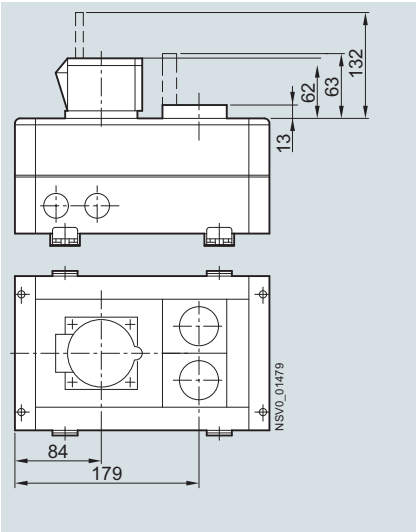

Ancillary equipment units size 2, with device installation unit

BD01-GK2M2/F

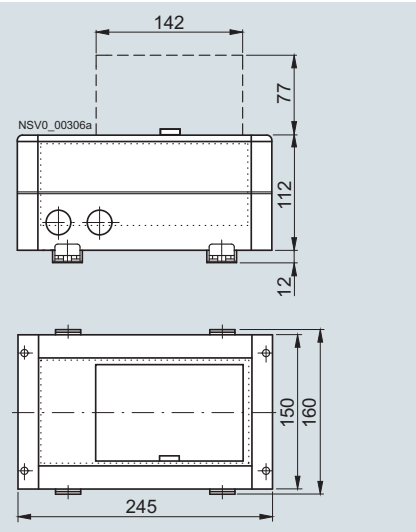

Dotted lines: usable component fitting space
Dashed lines: free space for opening the flap

Configuration aids

Protective covers according to IP55

For tap-off point

BD01-FAS

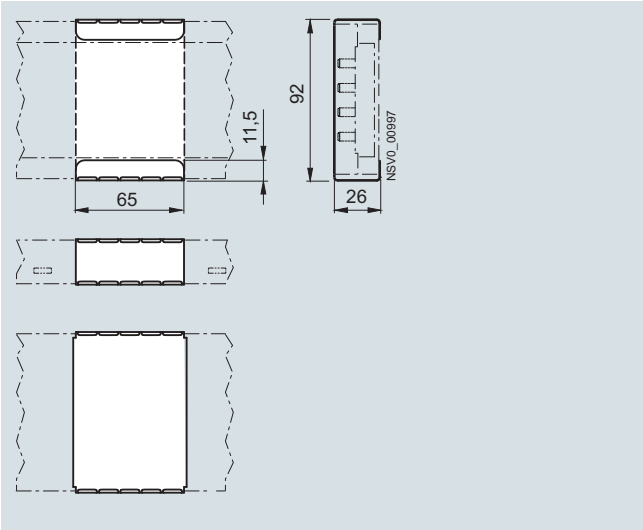

For connection point

BD01-FS

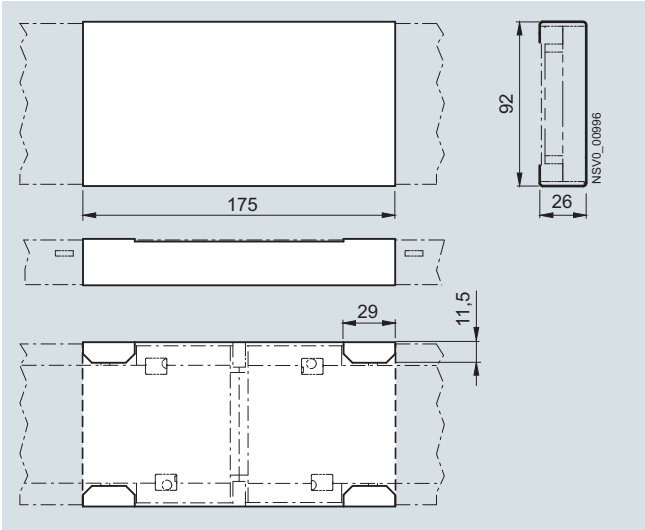

For feeding unit at bottom

BD01-FES

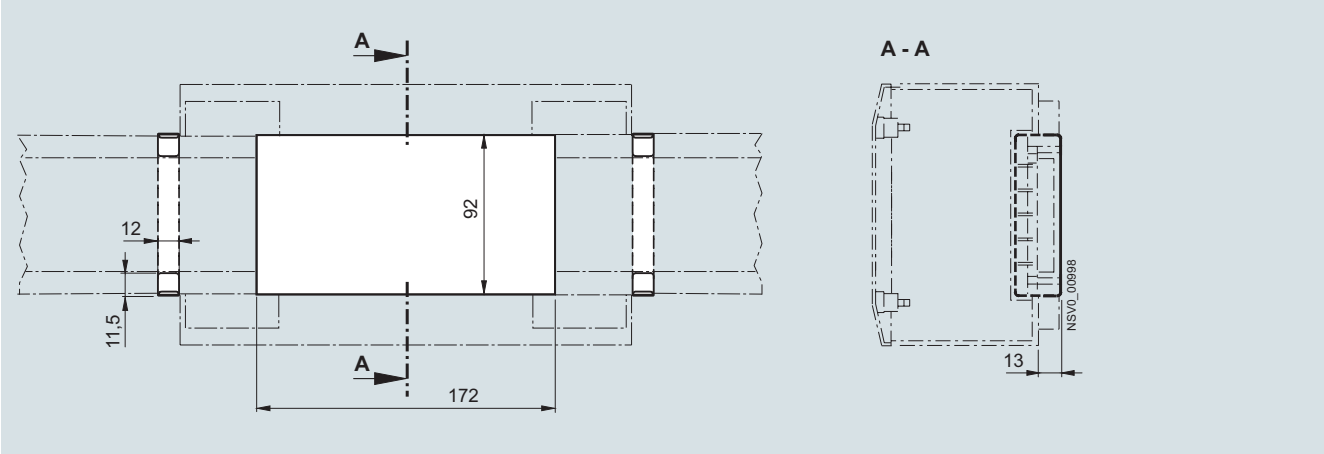

For feeding unit at side, top

BD01-KS

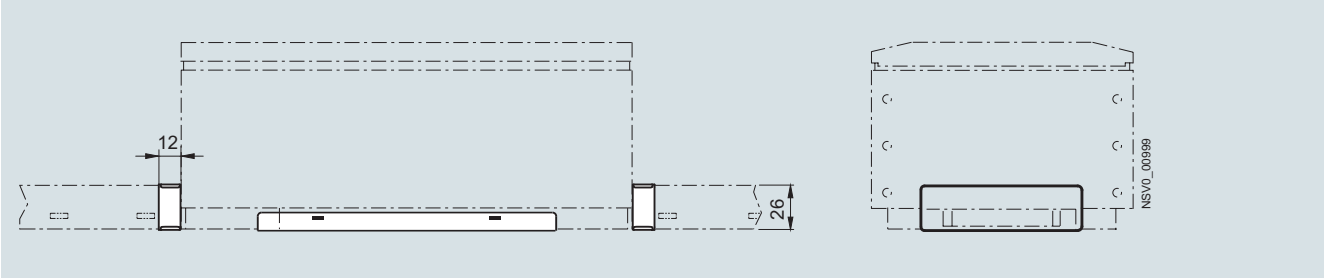

For tap-off unit
BD01-AK01X-IP55

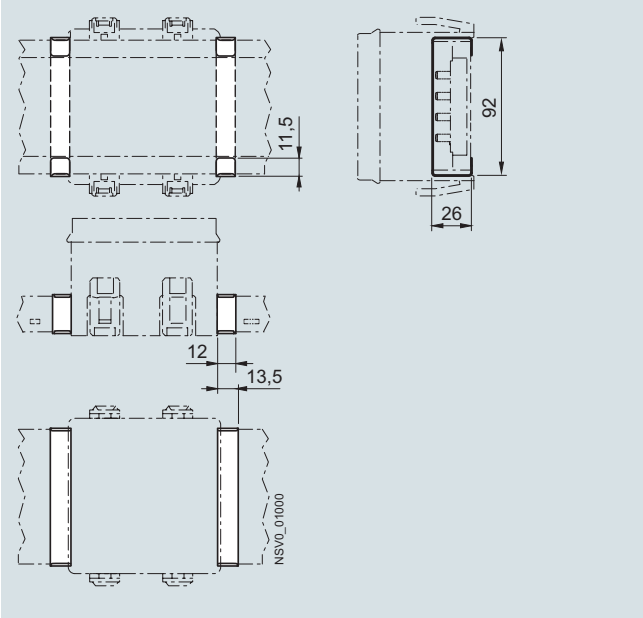

For tap-off unit
BD01-AK02X-IP55

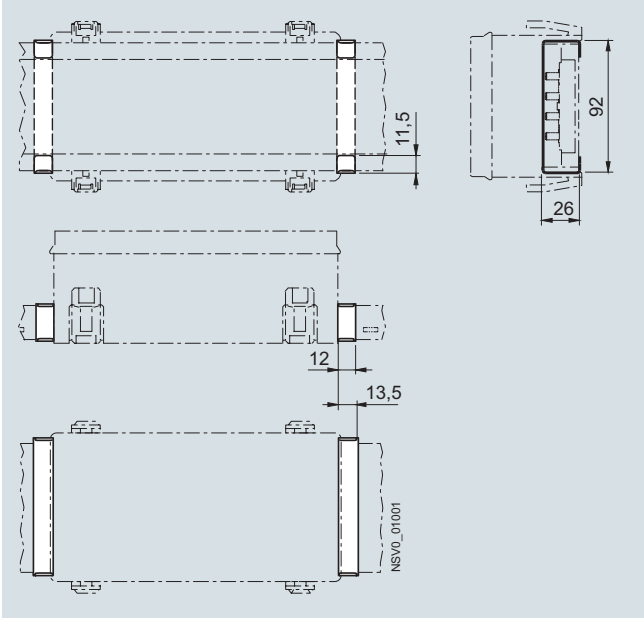

For tap-off unit
BD01-AK1X-IP55

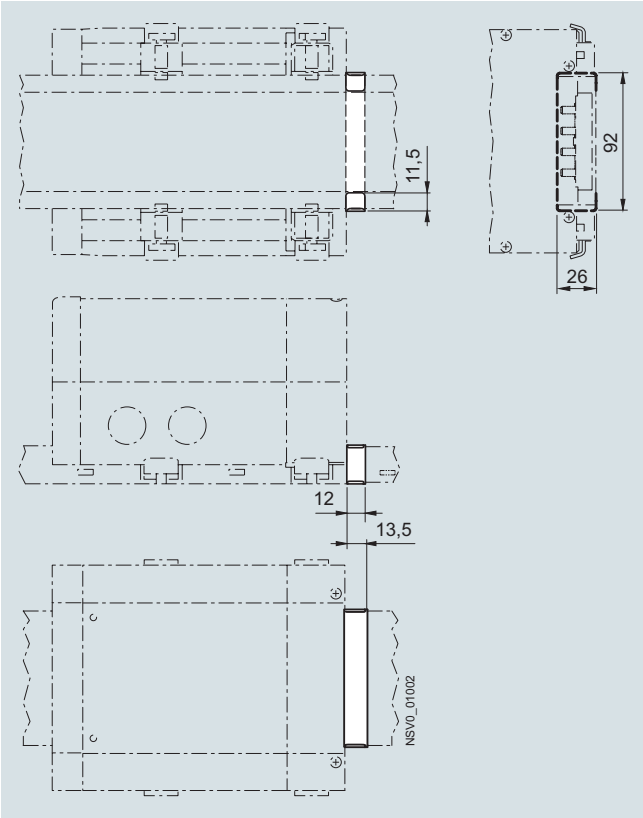

For tap-off unit
BD01-AK2X-IP55

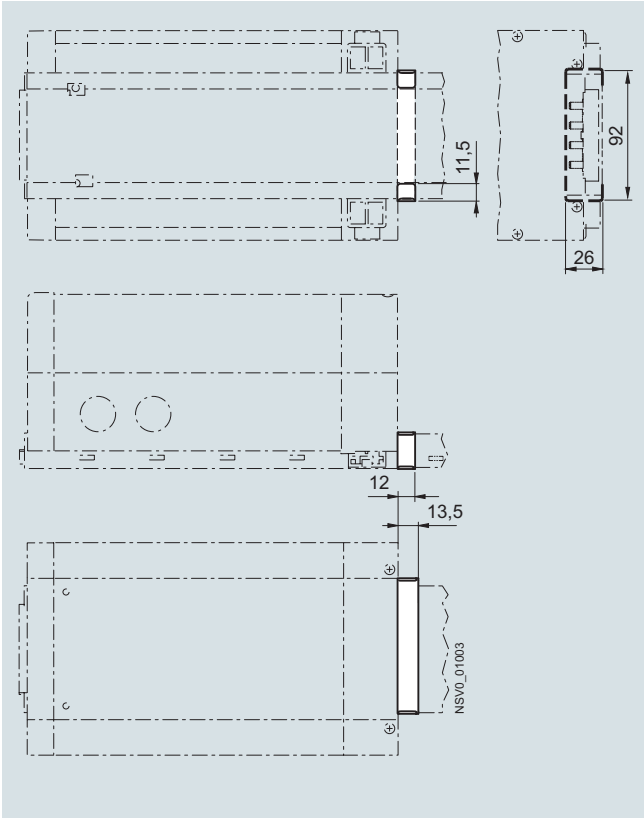

Configuration aids

Fixing

Universal fixing brackets

BD01-B

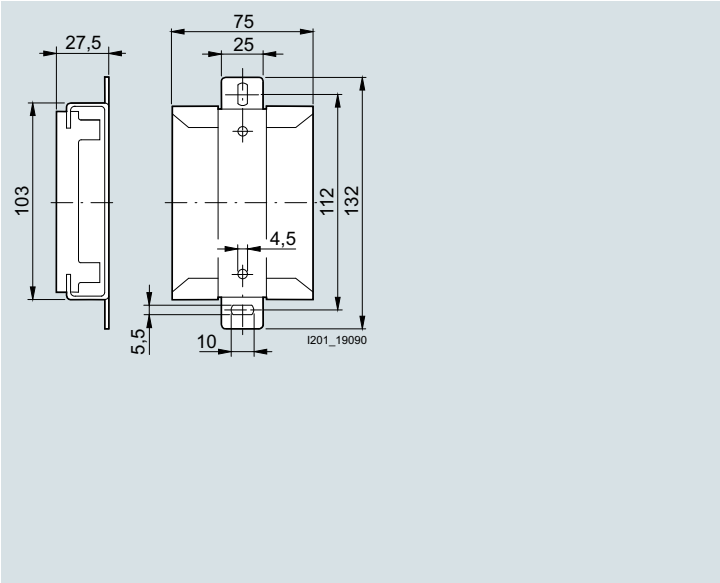

Suspension brackets

BD01-BA

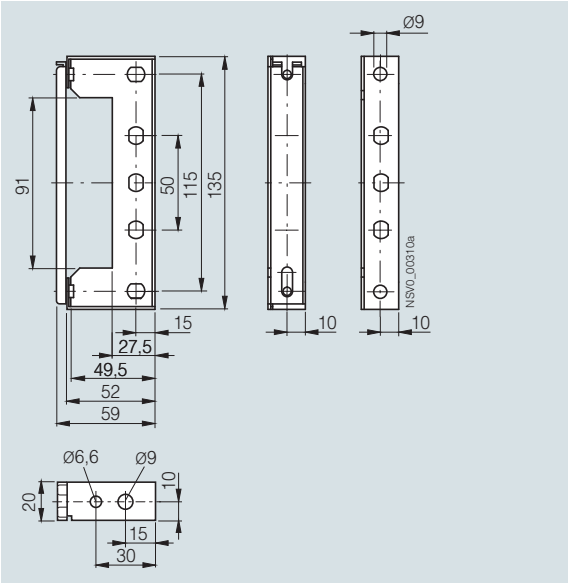

Hanger brackets

BD01-BAP

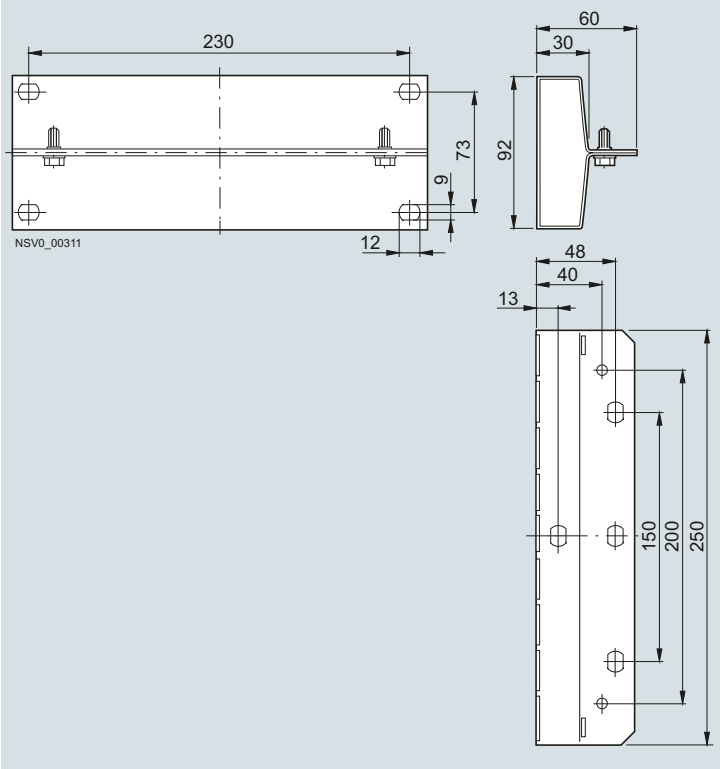

Fire barrier

BD01-S90

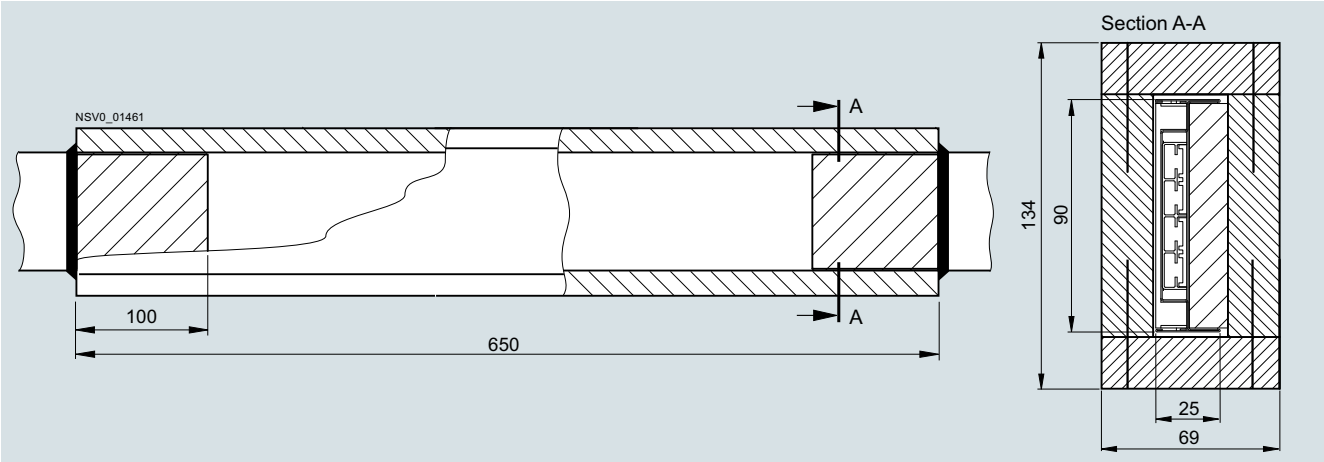

Notes

BD2 System – 160 ... 1250 A

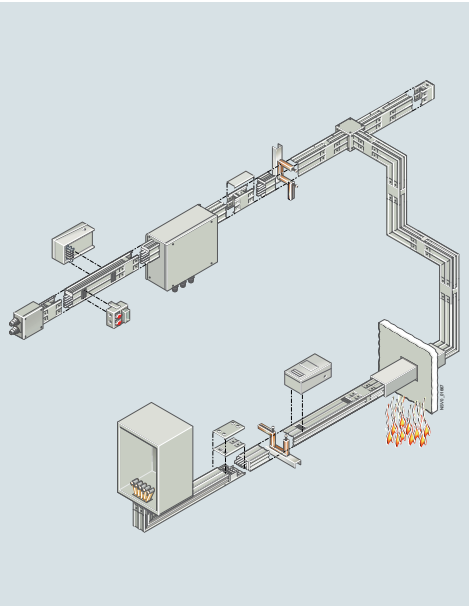

For further technical product information:

DF & PD Technical Support:
support.automation@siemens.com

→ Product list:
Technical specifications

→ Entry list:
Certificates / Characteristics / Download / FAQ / Manuals / Operating instructions / Updates

Overview

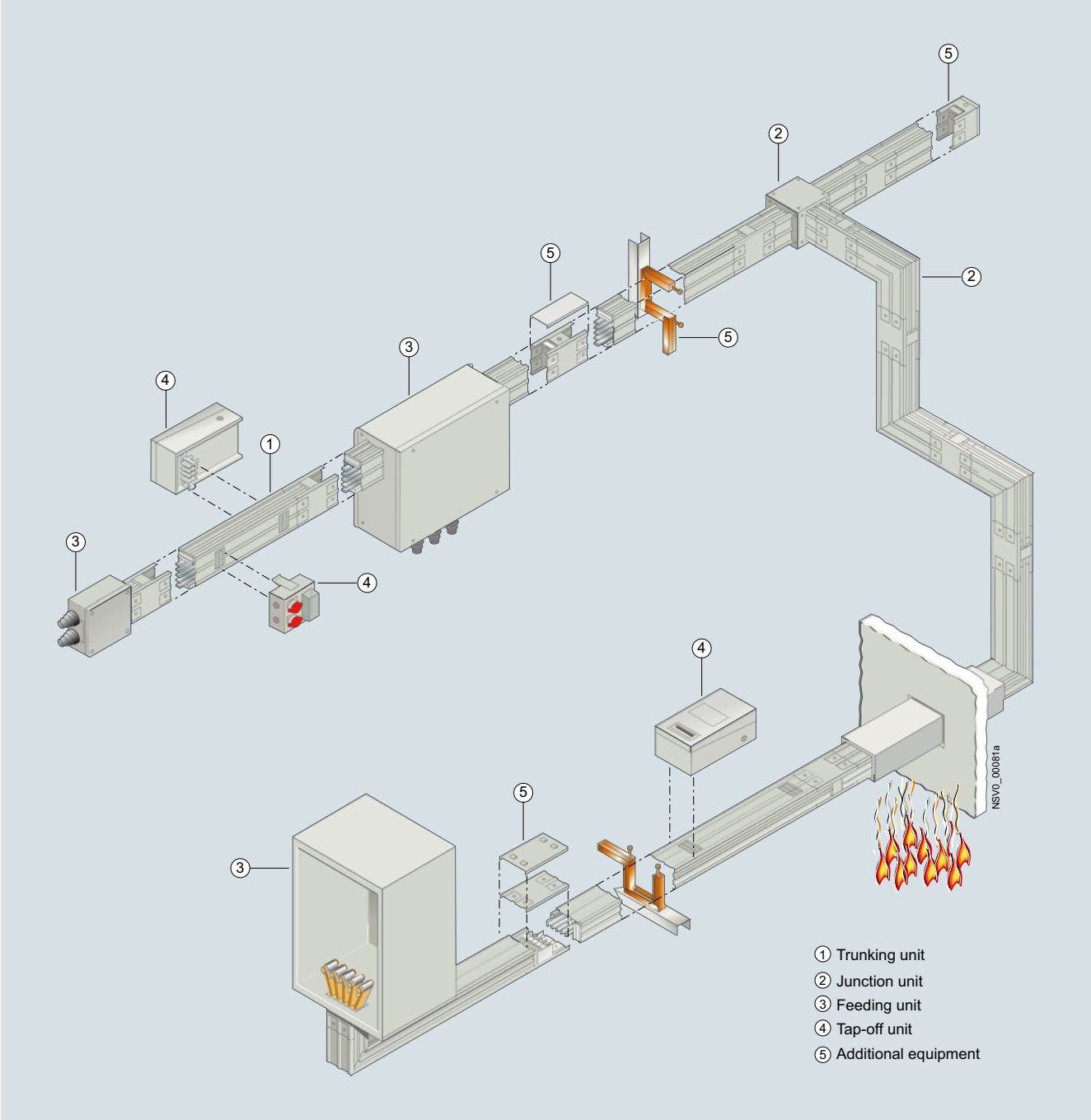

Version

Design-verified

according to

- IEC/EN 61439-1
- IEC/EN 61439-6

Degree of protection

- Trunking units IP52 (standard), feeding units and tap-off units IP54
- Increased degree of protection to IP55 with additional equipment for operation in harsh industrial environments for busbars and tap-off units

Components

Straight trunking units

- With or without fire barrier
- 5-conductor configuration
- Conductors made of copper or aluminum
- Standard lengths of 3.25 m, 2.25 m and 1.25 m
- Optional lengths from 0.5 m to 3.24 m
- Tap-off points
  - None
  - On two sides offset every 0.25 m or 0.5 m
- Fire barrier: fire resistance class EI 90 and EI 120 according to DIN 4102, Sheet 2 to 4 + EN 1366

Junction units

- Edgewise or flat
- With or without fire barrier
- L-unit with or without configurable angle
- Z-unit
- T-unit
- Flexible junction units

Feeding units

- Entry/end feeding unit
- Feeding unit with switch disconnector
- Center feeding units
- Bolt terminal
- Cable entry from 1, 2 or 3 sides
- Distribution board feeding units

Tap-off units

- Up to 25 A
  - Molded-plastic enclosure
  - Double anti-rotation feature
- Up to 63 A
  - Sheet-steel enclosure, hot-galvanized, powder-coated cover
  - Double anti-rotation feature
- Up to 125 A
  - Sheet-steel enclosure, hot-galvanized, powder-coated cover
  - Double anti-rotation feature
- Up to 530 A
  - Sheet-steel enclosure, hot-galvanized, powder-coated cover
  - Tap-off unit partitioned according to function
  - Enclosure for protective devices
  - Enclosure for power pick-up
  - Double anti-rotation feature

Ancillary equipment units

- For 9 modular widths (MW)
- With or without device installation unit, powder-coated cover

Additional equipment

- End flanges
- For degree of protection IP55
  - Flange for edgewise mounting position
  - Flange for flat mounting position
  - Flange for vertical mounting position
  - Additional components for tap-off units
- For fixing
  - Universal fixing bracket for edgewise or flat mounting position
  - Fixing elements for vertical busbar runs, for wall or ceiling mounting
- Joint blocks

Benefits

- Easy and quick planning
- Time-saving and economical mounting
- Reliable and safe operation
- Flexible modular system with simple solutions for every application
- Early planning of the power distribution system without exact knowledge of load locations
- Early readiness for operation thanks to fast and simple mounting
- Innovative design: No more compensation units to compensate elongation
- Tap-off units and tap-off points codable at the factory
- Sealable throughout
- Additional equipment for increasing the degree of protection to IP55 for extreme ambient conditions

Design

Trunking units

Power is transmitted through nickel-plated and tinned aluminum conductors, as well as through nickel-plated and tinned copper conductors.

The low inherent impedance and large surface area of the busbars limit the heat build-up.

The result is a low transmission loss and a low voltage drop.

Enclosures

The enclosure is made of hot galvanized steel with a paint finish. Color: RAL 7035 (light gray).

Protected to IP52 degree of protection as standard. This can be increased to IP55 with additional components.

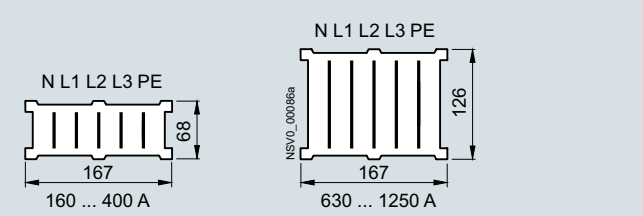

BD2A-3 trunking units, BD2C-3
junction units, feeding units BD2A-..., BD2C-...

Tap-off points

The busbar support and tap-off point form a unit.

The leading/delayed PE contact at the tap-off unit provides positive opening or closing of the tap-off point.

The tap-off point can be coded at the factory on request, together with the tap-off unit. The tap-off point is sealable.

BD2-AK1, BD2-AK2(3), BD2-AK02(03) and BD2-AK04 tap-off units are plug-in types for all systems, BD2-AK05(06) tap-off units only for systems from 630 A.

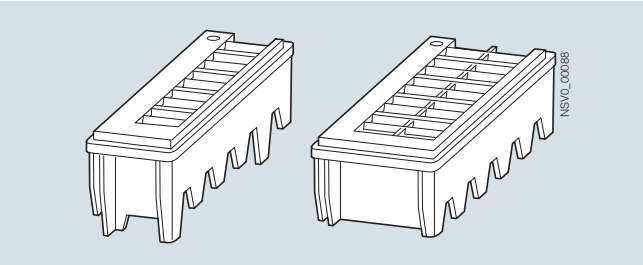

Left: Tap-off point for BD2.-160 to BD2.-400
Right: Tap-off point for BD2.-630 to BD2.-1250

Connection technology

Trunking units are connected quickly and securely via the joint block.

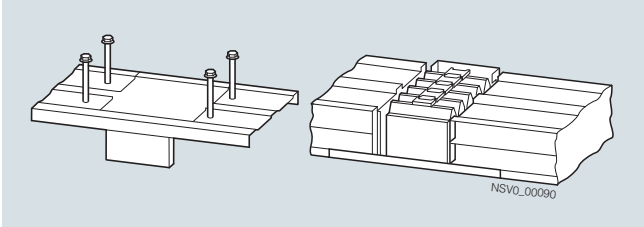

Left: Flange cover
Right: Joint blocks

Joint blocks

Features:

- Even holding pressure ensures completely secure connection of all five busbars. Fast mounting up to 1250 A with single-bolt terminal
- The built-in expansion compensation absorbs the heat expansion of the busbars
- The terminal can be tightened using conventional tools
- Two sizes are available for the whole system
- The joint block is supplied as an integral part of the trunking units and junction units

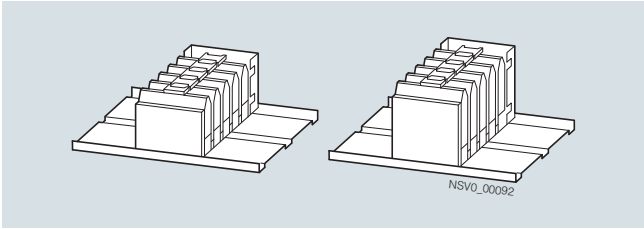

Left: BD2-400-EK for 160 to 400 A
Right: BD2-1250-EK for 630 to 1250 A

Four screws provide the mechanical connection to the enclosure.

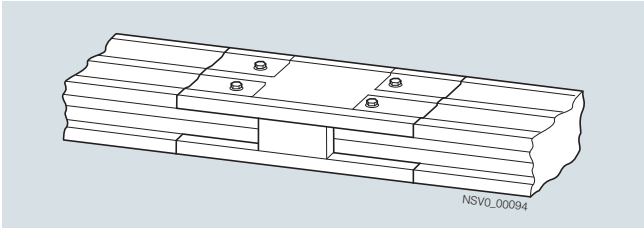

Straight trunking units

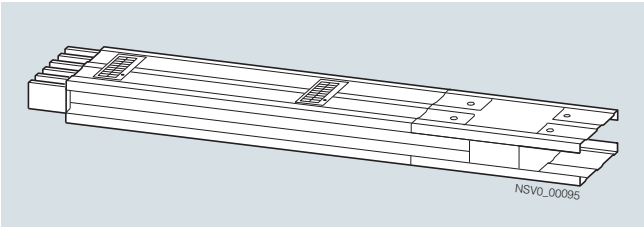

Equipment

The trunking units are available in the following versions:

- Without tap-off points
- With tap-off points on two sides at intervals of 0.5 m, offset by 0.25 m.

One joint block is included in scope of supply.

Fire barriers can be fitted (see "Fire barrier", page 4/6).

The following lengths are available:

- 3.25 m
- 2.25 m
- 1.25 m
- Optional lengths from 0.5 to 3.24 m
- Lengths of 1.25 m adaptable by the customer, can be shortened to as much as 0.5 m (full cross-section for N and PE, without tap-off points).

Number of tap-off points

Length m	Tap-off units on both sides
1.25 ... 2.25	4 ... 8
2.26 ... 3.25	8 ... 12

On optional lengths, it may not be possible to fit tap-off units to all tap-off points.

Junction units

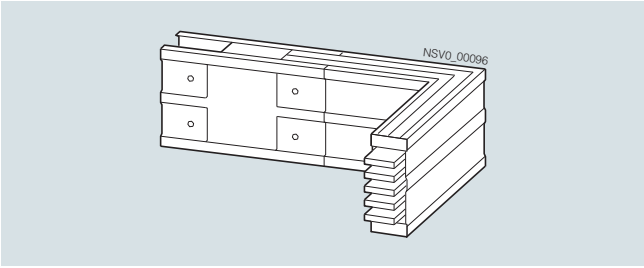

Equipment

Protected to IP52 degree of protection as standard. This can be increased to IP55 with additional components.

Flexible copper conductors for the flexible junction units.

The L-units with configurable angle are available with a fixed angle of 90° or any angle in 5° increments from 85° to 175°.

All L- and Z-units are available

- With standard dimension lengths of 0.36 m
- With one or two optional dimension lengths of 0.36 m to 1.25 m

The junction units are supplied with one joint block.

Flexible junction units

No mounting possible on the infeed; not upgradable to IP55.

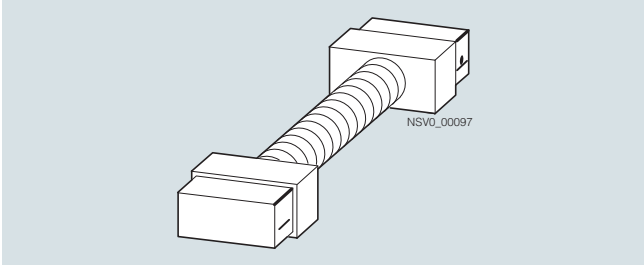

BD2-...-R

L-units

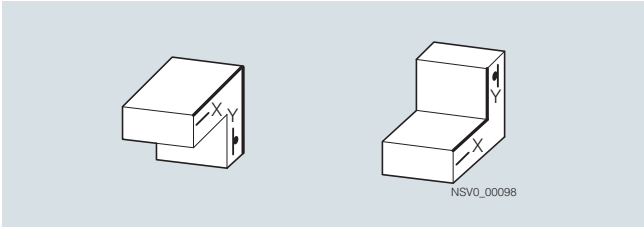

Left: Knee, rear;
BD2.-...-LH, BD2.-...-LH-X*, BD2.-...-LH-Y*, BD2.-...-LH-X*/Y*
Right: Knee, front;
BD2.-...-LV, BD2.-...-LV-X*, BD2.-...-LV-Y*, BD2.-...-LV-X*/Y*

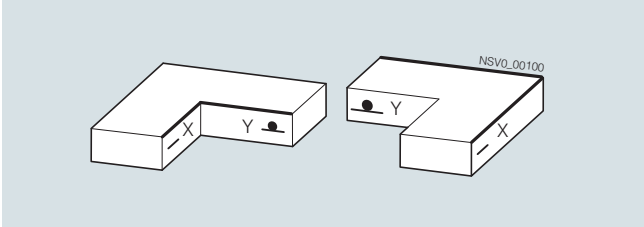

Left: Elbow, right;
BD2.-...-LR, BD2.-...-LR-X*, BD2.-...-LR-Y*, BD2.-...-LR-X*/Y*
Right: Elbow, left;
BD2.-...-LL, BD2.-...-LL-X*, BD2.-...-LL-Y*, BD2.-...-LL-X*/Y*

Z-units

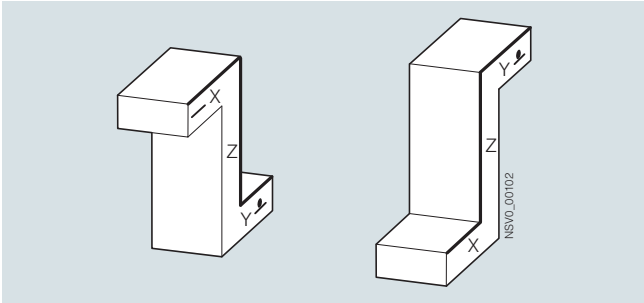

Left: BD2.-...-ZH-Z*, BD2.-...-ZH-X*/Y*/Z* (rear)
Right: BD2.-...-ZV-Z*, BD2.-...-ZV-X*/Y*/Z* (front)

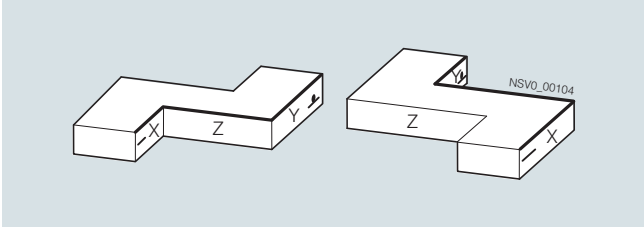

Left: BD2.-...-ZR-Z*, BD2.-...-ZR-X*/Y*/Z* (right)
Right: BD2.-...-ZL-Z*, BD2.-...-ZL-X*/Y*/Z* (left)

Introduction

T-units

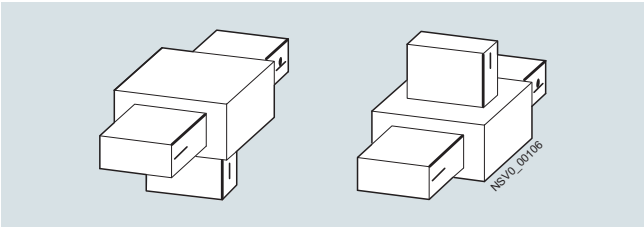

Left: BD2.-...-TH (rear)
Right: BD2.-...-TV (front)

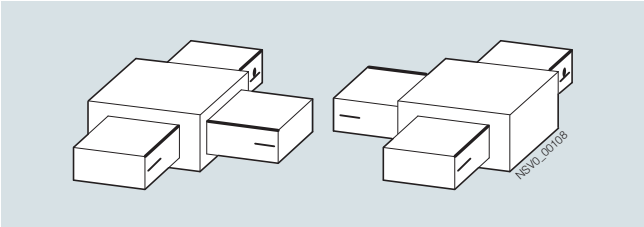

Left: BD2.-...-TR (right)
Right: BD2.-...-TL (left)

L-units with configurable angle from 85° to 175°

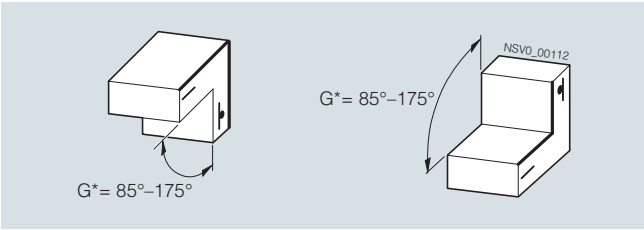

Left: Knee, rear; BD2.-...-LH-G*, BD2.-...-LH-X*-G*, BD2.-...-LH-Y*-G*, BD2.-...-LH-X*/Y*-G*
Right: Knee, front; BD2.-...-LV-G*, BD2.-...-LV-X*-G*, BD2.-...-LV-Y*-G*, BD2.-...-LV-X*/Y*-G*

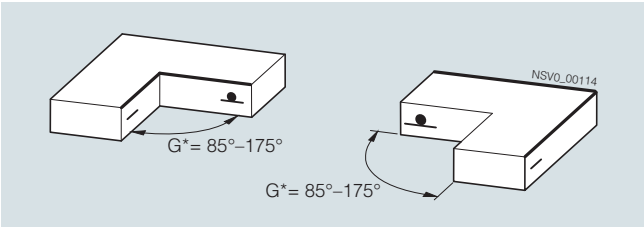

Left: Elbow, right; BD2.-...-LR-G*, BD2.-...-LR-X*-G*, BD2.-...-LR-Y*-G*, BD2.-...-LR-X*/Y*-G*
Right: Elbow, left; BD2.-...-LL-G*, BD2.-...-LL-X*-G*, BD2.-...-LL-Y*-G*, BD2.-...-LL-X*/Y*-G*

Fire barrier

If the busbar trunking system is routed through a fire wall or ceiling, a fire barrier must be fitted. Depending on the customers requirements, Siemens offers fire barriers with a fire resistance class of S 90 and S 120.

Standard lengths, optional lengths and junction units are supplied with fire barrier equipment as specified in the ordering data (see "Fire barriers", page 4/87).

Factory-fitted equipment:

- Internal fire barriers
- Documentation (certificate of approval, wall-mounted signs and declaration of conformity), for Germany as separate kit BD2-S90-ZUL-D or BD2-S120-ZUL-D

Mineral wool to be cut to size (see "Fire barriers" on page 4/93) for sealing joints between the busbar trunking element and the building element must be supplied by the customer.

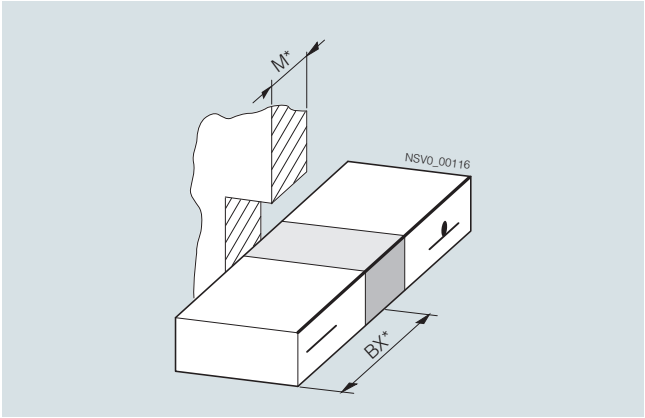

Fire barrier for trunking units and junction units

For EI 90: BD2A-...	For EI 120: BD2A-... or BD2C-...
+BD2-S90-BX*-M*	+BD2-S120-BX*-M*
+BD2-S90-BY*-M*	+BD2-S120-BY*-M*
+BD2-S90-BZ*-M*	+BD2-S120-BZ*-M*

Fire barrier for trunking units and junction units.

Fire barrier: Fire resistance class EI 90 and EI 120 according to EN 1366-3 and approval papers for European standard available soon.

Feeding units

For the infeed to BD2 runs, various feeding unit versions are available to meet different requirements.

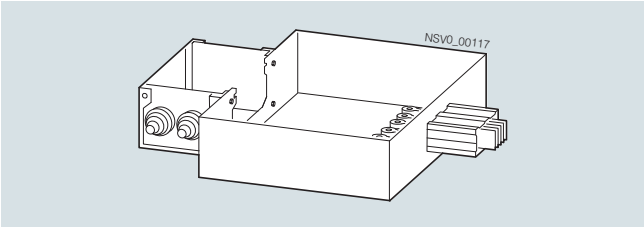

Example: End feeding unit with connected cabling box

Features:

- Cables are introduced from the front face
- Cable entry plate (aluminum) for single-core cable entry
- Cable connection is via bolts. The bolts are included in scope of supply.
- The factory-fitted jumper between PE and N can be removed for connection of five-core cables
- Feeding units are supplied without joint block
- They are not directly mountable on junction units

For double-end infeed, an additional joint block is required.

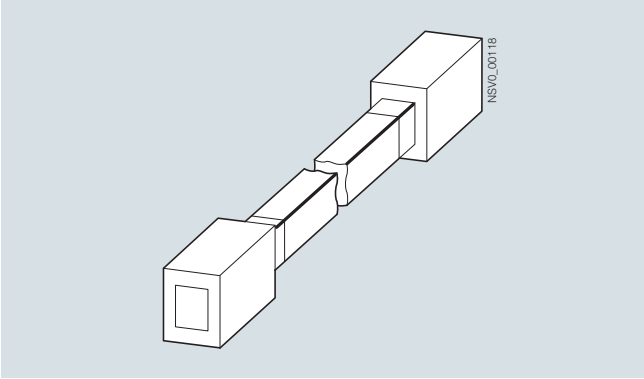

BD2.-...-EE double-end feeding unit

To distribute large amounts of power with small busbar cross-sections, it is sensible to use a center feeding unit in some cases. It is mounted in the middle of a busbar run between two trunking units. The left run and the right run are supplied simultaneously with one supply cable. If using a 1000-A center feeding unit, for example, it is therefore possible to feed-in 2000 A. In this case, special consideration must be given to the overload and short-circuit protection of the busbar system.

If the short-circuit protection is not assured by the upstream protective device and/or the overload is not due to the type and number of loads, additional protective measures are required.

Two options are possible:

- Use of a center feeding unit with one coupling unit on the right and left respectively next to the feeding unit. The coupling unit must be equipped with a protective device (fuse or circuit breaker) that ensures the short-circuit and overload function.
- Use of two end feeding units that are arranged centrally in the busbar run. The two supply cables are separately fused in the distribution system.

If using end feeding units in addition to a center feeding unit, an additional joint block is required for each end feeding unit.

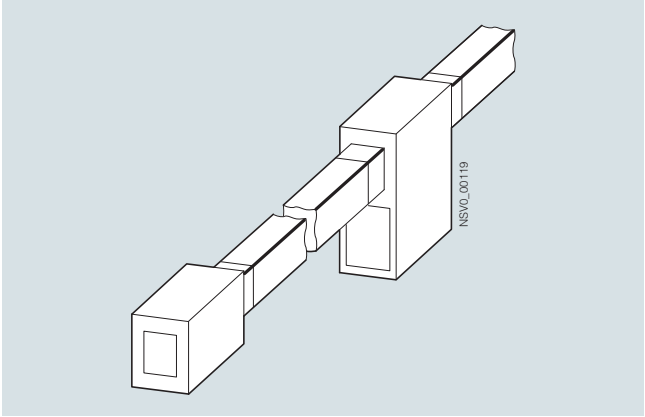

BD2.-...-EE end feeding unit and BD2.-...-ME center feeding unit

End feeding units

Cable entry is from the front; cable entry from the side is possible for the version with a BD2.-...-EE-KR cabling box.

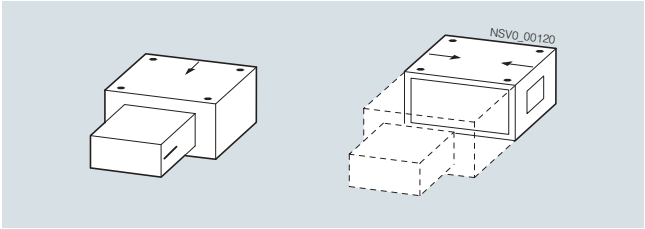

BD2.-...-EE and BD2.-...-EE-KR end feeding units

The phase sequence can be changed on site by rotating the busbar pack.

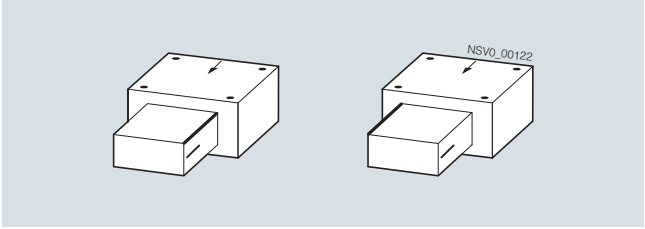

End feeding units with switch disconnector

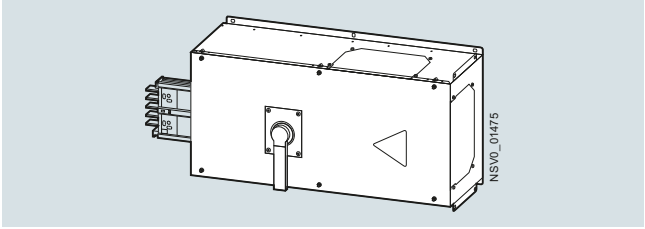

End feeding units with switch disconnector

Introduction

Distribution board feeding units

For BD2 connection to a distribution board.

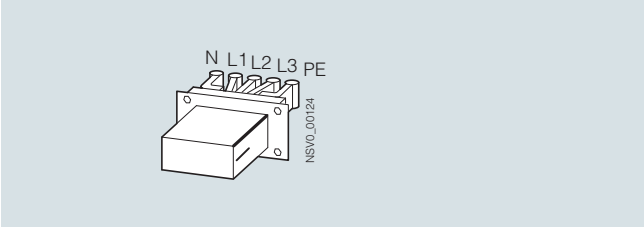

BD2.-...-VE distribution board feeding unit

Center feeding units

Cable entry is possible from 3 sides. The phase sequence can be changed on site by rotating the busbar pack.

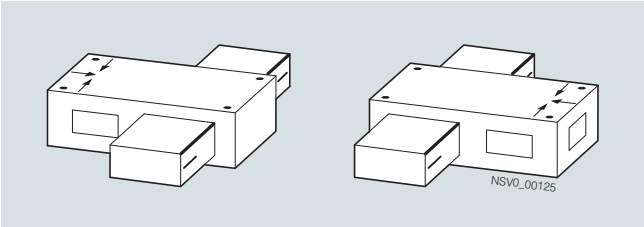

BD2.-...-ME center feeding units (PE left and PE right)

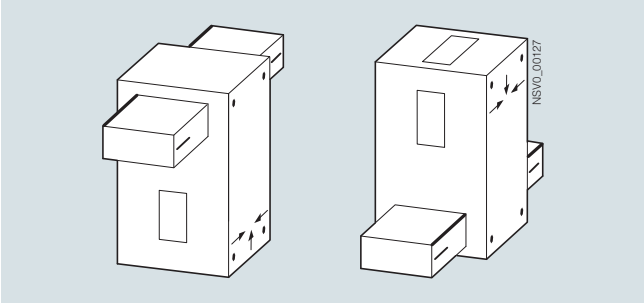

BD2.-...-ME center feeding units (PE rear and PE front)

Tap-off units

Tap-off units are available in a number of versions for different applications.

BD2-AK1 molded plastic-enclosed tap-off units up to 25 A, for free arrangement of components, with fuses, miniature circuit breakers and socket outlets

Features:

- Molded-plastic enclosure, light gray, similar to RAL 7035
- Transparent cover for the protective devices
- When mounting and removing the tap-off units, a load switching capacity of AC-22B up to 400 V is achieved
- An anti-rotation feature prevents incorrect mounting
- Power pick-up through silver-plated horseshoe contacts
- Cables can be introduced from three sides
- The tap-off unit must be removed from the trunking before the unit can be opened and the cables connected
- Built-in strain relief
- The connecting cables should be supported separately if required

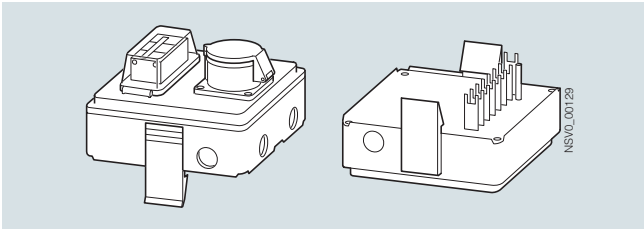

BD2-AK1/CEE165A163

Sheet-steel enclosed tap-off units BD2-AK2 up to 63 A and BD2-AK3 up to 125 A with cover-integrated switch disconnector

Features:

- Sheet-steel enclosure, hot-galvanized, and powder-coated cover, light gray, RAL 7035
- The tap-off units can be mounted and removed only with their cover open
- Switch disconnector integrated into the cover, switching capacity at 63 A AC-22B up to 400 V or at 125 A AC-21B, which ensures that the built-in components are not live when the cover is open
- Unintentional closing of the cover can be prevented by fitting a padlock
- An anti-rotation feature prevents incorrect mounting
- Cables can be introduced from three sides; use plastic cable glands with strain relief (not in scope of supply)
- Power pick-up via silver-plated horseshoe contacts
- If the PE conductor is used as a PEN conductor, note that the PE contact of the BD2-AK3... tap-off units have only half the cross-section and therefore cannot carry the full rated current
- The connecting cable should be supported separately if necessary

Device installation unit:

For the installation of devices (e.g. miniature circuit breakers) based on DIN 43871, with 9 MW. 1 MW corresponds to a space requirement of 18 mm. Hinged covers on all tap-off units allow device operation from outside.

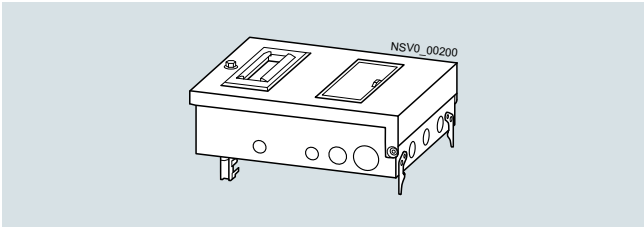

BD2-AK2M2/A323

Tap-off units BD2-AK2 up to 63 A, for free arrangement of components, with fuses, miniature circuit breakers and socket outlets

Features:

- Miniature circuit breakers can be externally operated if required (device installation unit with 9 MW; 1 MW = 18 mm)

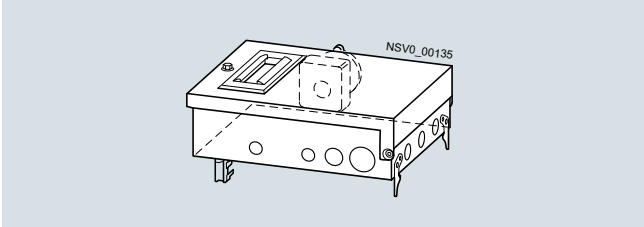

BD2-AK2X/CEE325S33

BD2-AK3 tap-off units up to 125 A
with fuse switch disconnectors and fuse bases

Features:

- On versions with fuse switch disconnectors or circuit breakers, the cover is interlocked with these switches and can therefore be opened only when they are switched off
- On versions with fuse bases, the isolator built into the cover does not disconnect the load. It only removes the voltage from the installed fuse bases when the cover is opened.
- Terminal bolts for cables

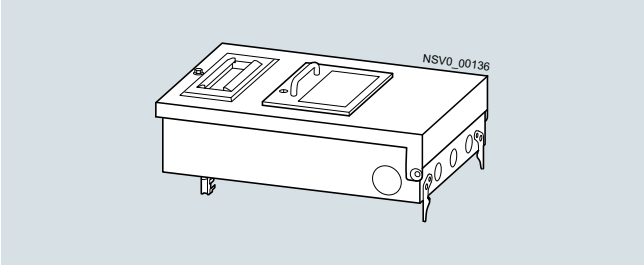

BD2-AK3X/GSTZ00

Tap-off units BD2-AK2 up to 63 A and BD2-AK3 up to 125 A
equipped to customer specifications

Features:

- Device installation to customer specification in compliance with the requirements for design-verified low-voltage switchgear and controlgear assemblies. Configuration, quotations and delivery through your Siemens contacts in our branches.
- Device fixing on plates with holes, module strip or mounting rail according to EN 60715.

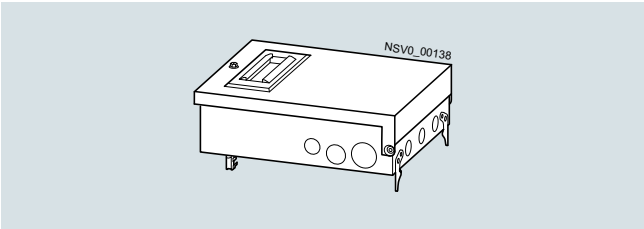

BD2-AK2...

BD2-AK02 (AK03) sheet-steel enclosed tap-off units
without cover-integrated switch disconnector

Features:

- Sheet-steel enclosure, hot-galvanized, and powder-coated cover, light gray, RAL 7035
- The tap-off units can be mounted and removed with their cover open and closed
- With the cover open the voltage is still applied to the installed devices (test facility). Degree of protection IP20 (finger-safe) is assured.
- Do not mount or remove tap-off units under load
- An anti-rotation feature prevents incorrect mounting
- Cables can be inserted from 3 directions, use plastic cable glands with strain relief (not included in the scope of supply)
- Power pick-up via silver-plated horseshoe contacts
- If the PE conductor is used as a PEN conductor, note that the PE contact of the BD2-AK03 tap-off units have only half the cross-section and therefore cannot carry the full rated current
- The connecting cable should be supported separately if necessary

Device installation unit:

For the installation of devices (e.g. miniature circuit breakers) based on DIN 43871, with 9 MW. 1 MW corresponds to a space requirement of 18 mm. Hinged covers on all tap-off units allow device operation from outside.

Tap-off units BD2-AK02 up to 63 A, for free arrangement of components, with fuses, miniature circuit breakers

Features:

- Miniature circuit breakers can be externally operated if required (device installation unit with 9 MW; 1 MW = 18 mm)

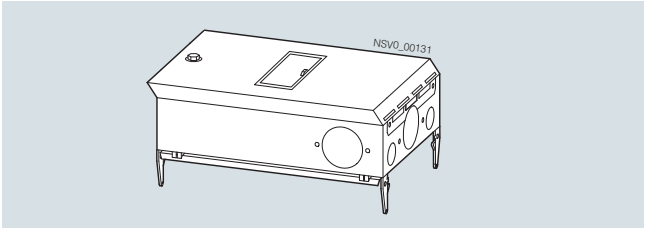

BD2-AK02M2/A323

Tap-off units BD2-AK03 up to 125 A
with circuit breakers, fuse switch disconnectors, fuse bases, miniature circuit breakers and fuse switches

Features:

- On versions with fuse switch disconnectors or circuit breakers, the cover is interlocked with these switches and can therefore be opened only when they are switched off
- Terminal bolts for cables
- Miniature circuit breakers can be externally operated if required (device installation unit with 9 MW; 1 MW = 18 mm)

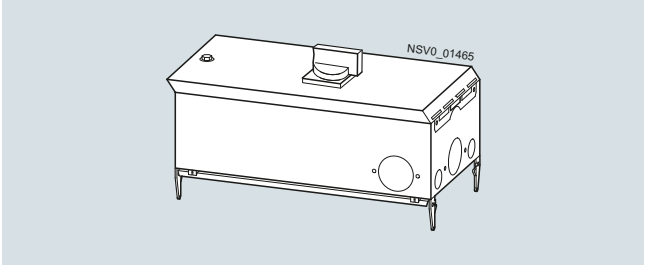

BD2-AK03X/L...

Introduction

Tap-off units BD2-AK02 up to 63 A and BD2-AK03 up to 125 A equipped according to customer requirements

Features:

- Device installation to customer specification in compliance with the requirements for design-verified low-voltage switchgear and controlgear assemblies. Configuration, quotations and delivery through your Siemens contacts in our branches.
- Device fixing on plates with holes, module strip or mounting rail according to EN 60715

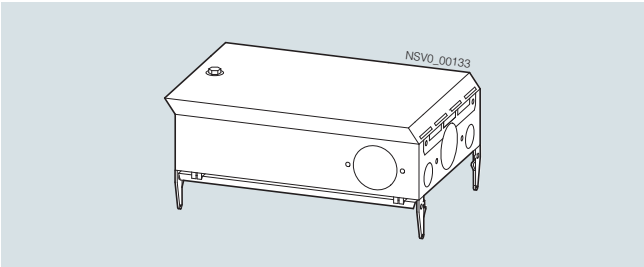

BD2-AK03...

Sheet-steel enclosed tap-off units BD2-AK04 with 3VA for 225 A, BD2-AK05 with 3VA for 380 A and BD2-AK06 with 3VA for 530 A without cover-integrated switch disconnector

Tap-off units BD2-AK04 with 3VA for 225 A, BD2-AK05 with 3VA for 380 A and BD2-AK06 with 3VA for 530 A with circuit breakers, fuse switch disconnectors and fuse bases

Features:

- Tap-off units > 250 A, type BD2-AK05 and BD2-AK06, can only be mounted on trunking units from 630 A to 1250 A
- Sheet-steel enclosure, hot-galvanized and powder-coated, light gray, RAL 7035.
- The tap-off units can be mounted and removed only with their cover open
- An anti-rotation feature prevents incorrect mounting
- Cables can be inserted from 3 directions, use plastic screwed cable glands with strain relief (not included in the scope of supply)
- Power pick-up through silver-plated horseshoe contacts
- If the PE conductor is used as a PEN conductor, note that the PE contact of the BD2-AK04, BD2-AK05 and BD2-AK06 tap-off units have only half the cross-section and therefore cannot carry the full rated current
- The connecting cable should be supported separately if necessary
- On versions with fuse switch disconnectors or circuit breakers, the cover is interlocked with these switches and can therefore be opened only when they are switched off
- On versions with fuse bases, the load must be disconnected before the enclosure cover is removed
- Connections for multi-core or single-core cables are possible

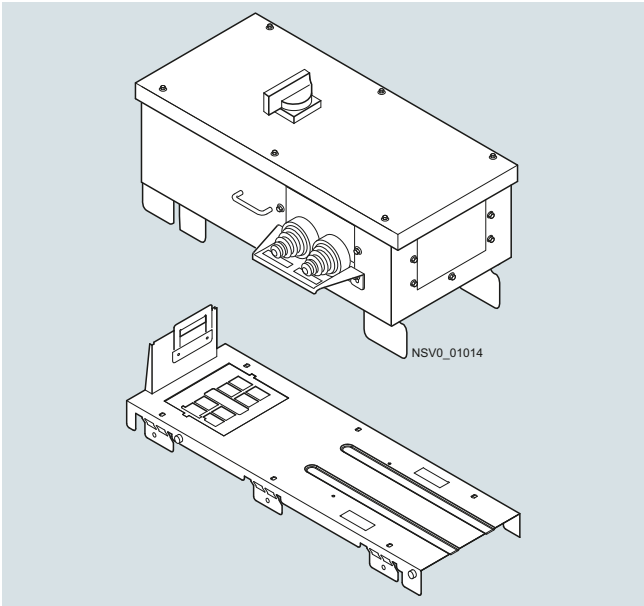

BD2-AK05/LS...

Ancillary equipment units

The ancillary equipment units are used for expanding the tap-off units or infeeds used. They can be mounted to the side of them.

Features:

- The enclosure is made from hot-galvanized sheet steel
- Cables can be inserted from 4 directions, use plastic screwed cable glands with strain relief (not included in the scope of supply)
- Can be combined with tap-off units (BD2-AK02, AK2, AK03, AK3)
- A DIN rail is integrated for component mounting
- 1 size with 9 MW (1 MW = 18 mm space requirement)
- With or without device installation unit for external actuation (1 size with modular width 9 MW)
- Installation of devices (e.g. miniature circuit breakers) based on DIN 43871 up to and including 63 A possible

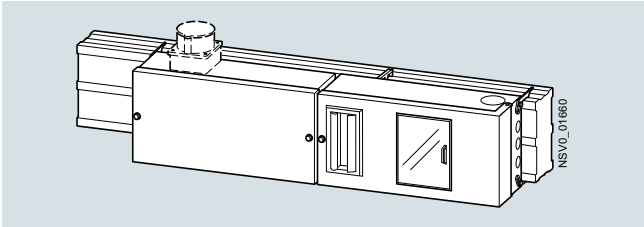

BD2-GKM2/F

BD2 empty tap-off units prepared for SENTRON 3VA2

Equipment

- Current range 40 A up to 400 A
- Prepared for special 3- or 4-pole molded case circuit breakers
- Medium/high switching capacity

The design verification of the tap-off units is only valid if the corresponding SENTRON 3VA circuit breakers are installed.

Trip unit and switching capacity

Circuit breakers with deviating trip units can be used; the switching capacity, however, must conform to that of the tested devices.

Operation

Prepared for operation via rotary operating mechanism (cover cutout available)

Important notes for BD2 tap-off units prepared for the installation of SENTRON molded case circuit breakers 3VA

- BD2 empty tap-off units are available for installation of SENTRON 3VA.
- The buyer solely bears the responsibility and the risks when using empty tap-off units.
- The buyer has to observe all applicable regulations in the respective countries. In particular, the buyer must comply with the Product Safety Act on his own responsibility.
- The buyer is solely responsible for the final routine test of the finally equipped tap-off unit in accordance with IEC 61439-1/-6 and for the warranty claims regarding the tap-off unit.
- The buyer commits himself to keep Siemens indemnified from any third-party claims resulting from tap-off units equipped by the buyer.
- For every tap-off unit, the scope of supply includes equipping instructions for device installation as well as installation instructions for plugging onto the busbar trunking system.
- After equipping, the buyer must attach a separate type plate according to IEC 61439-1/-6. In this case, Siemens recommends to mention the basic type code (e.g. BD2-AK03).

Electric voltage and non-observance of the manufacturer's stipulations.
Improper work at the empty tap-off unit can cause serious injury or death.

- Carry out any modifications or equipping only on the isolated - i.e. not electrically connected to the busbar system - empty tap-off unit.
- Observe the Five Safety Rules.
- Only specialists that have been instructed and trained accordingly may modify and equip the empty tap-off unit.

The stipulations of the equipping instructions must be observed for safety reasons.

- The finally equipped tap-off unit with a SENTRON 3VA molded case circuit breaker only conforms to the design verification of the comparable, factory-assembled tap-off unit if the device installation has been performed in accordance with the equipping instructions and equipping conditions.
- The installation instructions of the switching devices used must absolutely be followed, particularly regarding safety-relevant options (e.g. phase barriers)
- The availability and sales of empty tap-off units may be regionally limited. Permission and release may have to be coordinated with and obtained from the central sales departments at the headquarters.

Accessories

Protective sleeves

Provide purely mechanical protection for the busbar system when it is routed through walls and ceilings. The protective sleeve can be retrofitted.

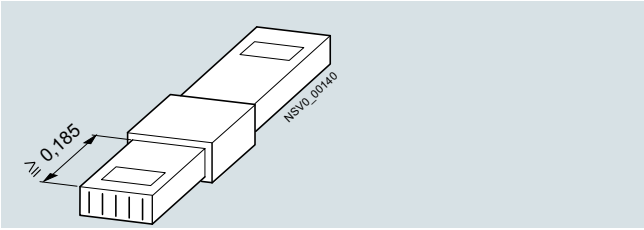

Protective sleeves BD2-400-D and BD2-1250-D
for currents up to 400 A or from 630 to 1250 A

End flanges

An end flange is required for terminating the busbar run. Two sizes are available.

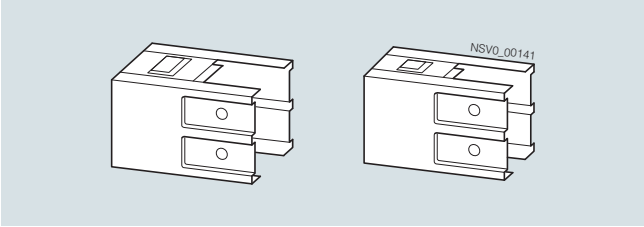

Right: BD2-400-FE end flanges for currents up to 400 A
Left: BD2-1250-FE end flanges for currents from 630 to 1250 A

Additional equipment for degree of protection IP55

Trunking units / Junction units

The higher degree of protection IP55 is achieved by fitting additional seals and a flange at the connection points and at the tap-off points.[1)]

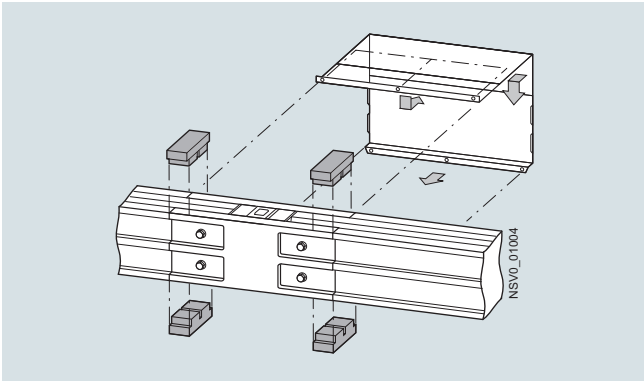

Connection point between trunking units with BD2-...-FS

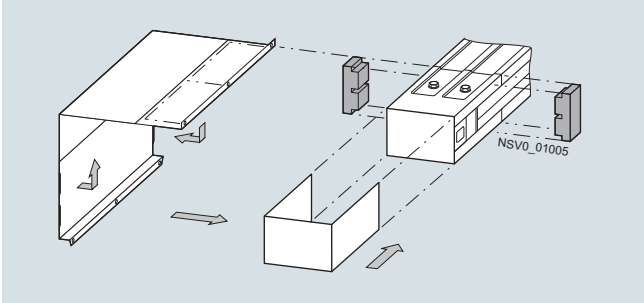

Connection point between trunking unit and end flange with BD2-...-FSE

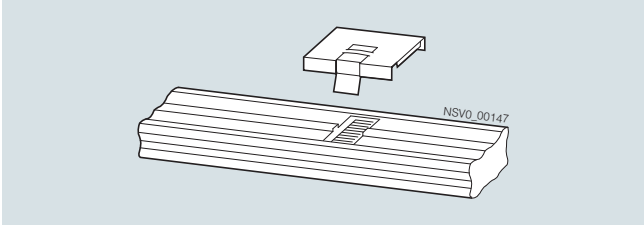

Tap-off openings with BD2- ... -FAS, top and bottom

1) Not suitable for connection to feeding units and flexible junction units.

Tap-off units

The higher degree of protection IP55 is achieved by fitting additional seals at the tap-off unit.

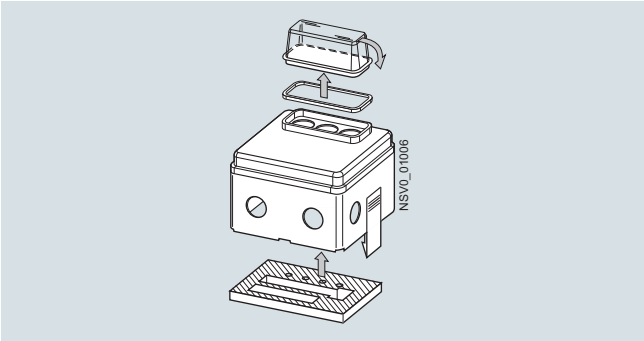

BD2-AK1-IP55

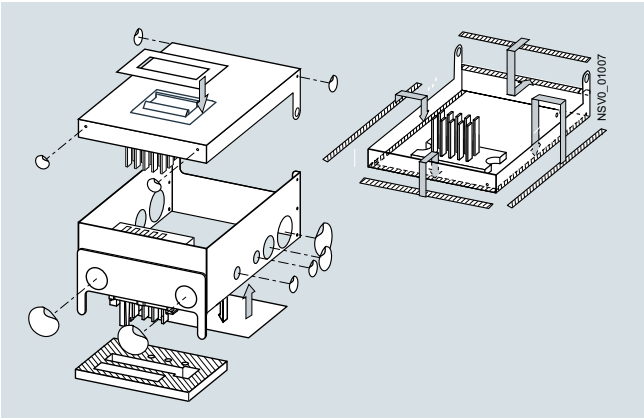

BD2-AK2X(3X)-IP55

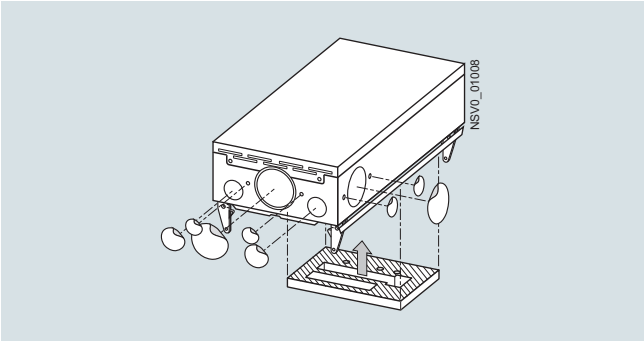

BD2-AK02X(03X)-IP55

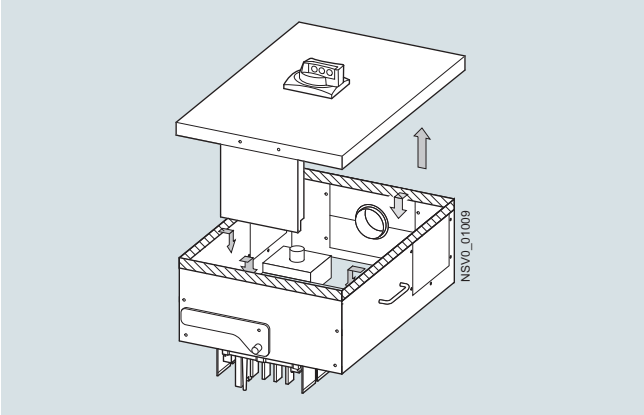

BD2-AK04(05, 06)-IP55

Introduction

Additional equipment for fixing

Fixing bracket

The universal fixing bracket can be used for edgewise and flat mounting of all trunking versions.

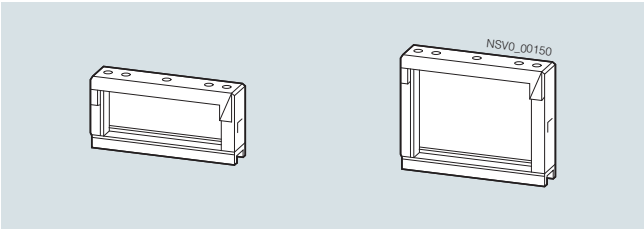

BD2-400-BB and BD2-1250-BB fixing brackets
for currents up to 400 A or from 630 to 1250 A

Spacer bracket

Spacer bracket for compensating building tolerances between trunking unit and wall or ceiling. The spacer bracket slides onto the BD2-...-BB fixing bracket and is secured with screws. For vertically arranged BD2 runs, it can also be used as an intermediate mounting.

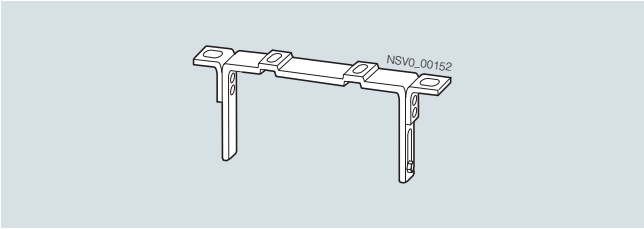

BD2-BD spacer brackets

Spacers

Spacers for compensating wall and ceiling discrepancies between feeding units and trunking units. The spacers clip onto the fixing bracket.
Two spacers are required per bracket

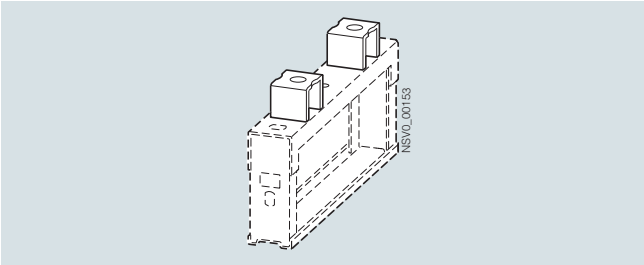

BD2-DSB spacers

Fixing elements for vertical busbar runs

These consist of a wall mounting element and additional components for ceiling mounting.

The fixing elements are adjustable to compensate for uneven walls.

For maximum load carrying capacity of fixing element see "Configuration information" on page 4/74.

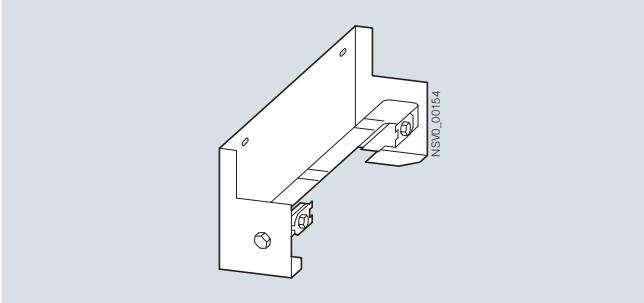

BD2-BWV wall mounting element for busbar run and end feeding unit

At the transition from the horizontal to the vertical busbar run, the ceiling mounting must be used as a support element.

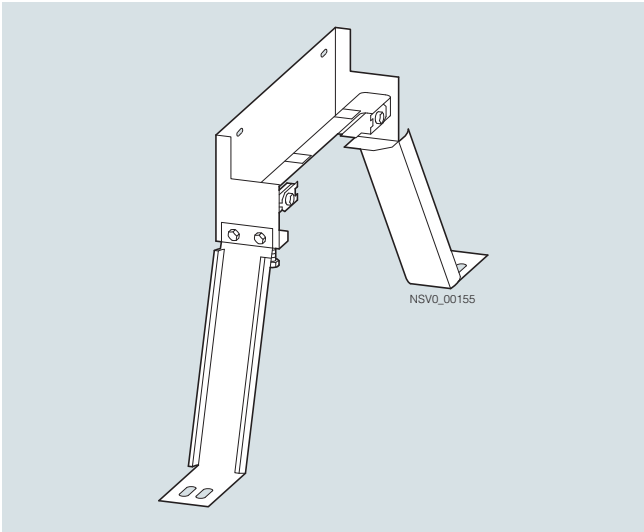

BD2-BDV ceiling mounting element for busbar run

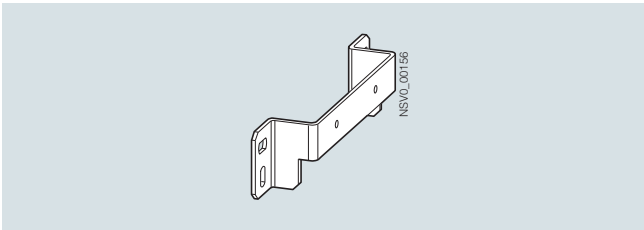

BD2-BVF wall mounting element for busbar run at each joint block

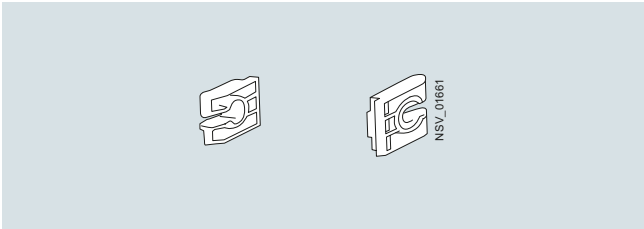

BD2-BVC wall mounting element, at a distance of 1.6 m on the busbar run in conjunction with mounting rail

Technical specifications

General system data

Type		BD2-...
Standards and specifications		IEC/EN 61439-1 and -6
Rated insulation voltage U_i	V AC/DC	690/800
Rated operational voltage U_e	V AC	690
Frequency	Hz	50
Rated current I_nAAC / I_nADC (three-phase current / direct current)		
• Aluminum busbars	A	160 ... 1000 / 200 ... 1490
• Copper busbars	A	160 ... 1250 / 200 ... 1940
Resistance to climate		
• Damp heat, constant, according to IEC 60068-2-78		40 °C/93 %/RH/56d
• Damp heat, cyclic, according to IEC 60068-2-30		56 x (25 ... 40 °C/3 h; 40 °C/9 h; 40 ... 25 °C/3_..._6 h; 25 °C/6 h) 95 % RH
• Cold according to IEC 60068-2-1		-45 °C, 16 h
• Temperature change according to IEC 60068-2-14		-45 ... 55 °C; 5 cycles (1 °C/min); holding time min. 30 min
• Salt spray test according to IEC 60068-2-52		Severity grade 3
• Ice formation according to IEC 60068-2-61		Composite test of damp heat, cyclic [56x (25-40 °C/3h; 40 °C/9h; 40-25 °C/3-6h; 25 °C/6h)/95 %RH] + cold [-45 °C, 16 h]
Ambient temperature min./max./24 h average	°C	-5/+40/+35
Environment classes were derived from climatic proofing tests		
• Climatic		1K5 (storage) = 3K7L (operation without exposure to the sun); 2K2 (transport)
• Chemically active		Salt spray, more contaminants optional 1C2 (storage) = 3C2 (operation) = 2C2 (transport)
• Biological		Is covered by IP degrees of protection and type of packaging 1B2 (storage) = 3B2 (operation) = 2B2 (transport)
• Mechanically active		Is covered by IP degrees of protection and type of packaging 1S2 (storage) = 3S2 (operation) = 2S2 (transport)
Degree of protection according to IEC/EN 60529 (installation type 2)		
• Trunking units		IP52
• Trunking units with additional equipment on the busbar run		IP55
• Feeding units, tap-off units		IP54
• Feeding units and tap-off units with additional equipment		IP55
Material		
• Trunking units, feeding units, tap-off units		Hot-galvanized, painted sheet steel, light gray (RAL 7035)
• Exception: BD2-AK1/... tap-off units		Molded-plastic enclosure, light gray (RAL 7035)
• Busbars		
- Aluminum nickel-plated and tinned		Aluminum busbars
- Copper nickel-plated and tinned		Copper busbars
Mounting position		Edgewise, flat, side
Weights		See Selection and ordering data

Tap-off units

Type	BD2-AK...					
Rated current I_n	**25 A**	**63 A**	**125 A**	**250 A**	**400 A**	**630 A**
Switching capacity of contact system	AC-22B	--	--	--	--	--
Switching capacity of the built-in switch disconnector according to IEC/EN 60947-3 at 400 V	--	AC-22B	AC-21B	--	--	--
Max. admissible rated prospective short-circuit withstand current when tap-off units with miniature circuit breakers are used:	10 kArms: For higher prospective short-circuit currents the "back-up protection"[1] for the miniature circuit breakers must be noted. 25 kArms: For higher rated prospective short-circuit currents, the upstream protection device must limit to: – max. let-through energy $I^2t = 12 \times 10^4$ A^2s; – max. let-through current I_D = 9.5 kA					

[1] Back-up protection, see page 4/75.

Important configuring notes

Not every tap-off unit has a rated voltage of 690 V and a short-circuit strength according to the system value.

The short-circuit strength and rated voltage of the tap-off units used in a system must be appropriate for it.

If the rated voltage of a tap-off unit does not match, choose one equipped with the appropriate components. Higher short-circuit currents must be limited by upstream protection devices (e.g. circuit breakers).

General data

Trunking units with aluminum conductor

Type				BD2A-.-160	BD2A-.-250	BD2A-.-400
Conducting paths						
Rated insulation voltage U_i			V AC/DC	690/800	690/800	690/800
Rated operational voltage U_e			V AC	690	690	690
Frequency			Hz	50 ... 60	50 ... 60	50 ... 60
Rated current						
Rated current I_n three-phase current			A	160	250	400
Rated current I_{nADC} direct current			A	277	390	630
Impedance per unit length of conducting paths with 50 Hz and 20 °C ambient temperature (cold bars)						
• Equivalent resistance		R_{20}	mΩ/m	0.484	0.302	0.167
• Positive reactance		X_{20}	mΩ/m	0.162	0.131	0.123
• Impedance		Z_{20}	mΩ/m	0.511	0.330	0.207
Impedance per unit length of conducting paths with 50 Hz and 20 °C ambient temperature (bar under operating conditions warm)						
• Equivalent resistance		R_1	mΩ/m	0.588	0.375	0.215
• Positive reactance		X_1	mΩ/m	0.160	0.128	0.122
• Impedance		Z_1	mΩ/m	0.610	0.397	0.247
• Warm resistance / Direct current per pole		R'_{dc_warm}	mΩ/m	0.377	0.219	0.118
Impedance of conducting paths in event of a fault						
• AC resistance per unit length		R_F	mΩ/m	0.959	0.673	0.548
• Positive reactance per unit length		X_F	mΩ/m	0.681	0.487	0.456
• Impedance per unit length		Z_F	mΩ/m	1.159	0.831	0.713
Zero sequence impedance acc. to IEC/EN 60909 (VDE 0102)	Phase to N	R_0	mΩ/m	2.050	1.340	1.217
		X_0	mΩ/m	0.884	0.750	0.640
		Z_0	mΩ/m	2.232	1.535	1.375
	Phase to PE	R_0	mΩ/m	2.018	1.071	1.059
		X_0	mΩ/m	0.416	0.567	0.518
		Z_0	mΩ/m	2.061	1.212	1.179
Short-circuit strength						
• Rated peak withstand current I_{pk}			kA	17	32	40
• Rated short-time withstand current I_{cw}		t = 1 s	kA	5.5	10	16
		t = 0.1 s	kA	10	16	20
Number of conductors				5	5	5
Conductor cross-section		L1, L2, L3	mm²	63	108	205
		N	mm²	63	108	205
		PE	mm²	63	108	205
Conductor material				Al	Al	Al
Max. fixing distances of trunking units at normal mechanical load						
• Edgewise			m	4	4	4
• Edgewise with BD2-BD[1]			m	4	4	4
• Flat			m	3.5	3.5	3.5
Fire load[2]			kWh/m	1.32	1.32	1.32

[1] When using BD2-BD spacer bracket.

[2] Values for trunking units with tap-off points.
For more values, see page 4/23.

The equivalent copper cross-section of the exterior profile of the enclosure is:
- 64 mm² for size 1 up to 400 A
- 77 mm² for size 2 from 630 A to 1250 A.

The following must be noted in this connection:
1. This enclosure cross-section does not apply to the two flange covers at the connection point.
2. The complete enclosure comprises two enclosure halves and flange covers at the connection point. These items form part of the protective measures. The impact of the enclosure is taken into account in the measurements of the fault loops for the impedance in the event of a fault (Z_f) and for the impedance (Z_{20}) according to the currently valid technical specifications.

Trunking units with aluminum conductor

Type				BD2A-.-630	BD2A-.-800	BD2A-.-1000
Conducting paths						
Rated insulation voltage U_i			V AC/DC	690/800	690/800	690/800
Rated operational voltage U_e			V AC	690	690	690
Frequency			Hz	50 ... 60	50 ... 60	50 ... 60
Rated current I_n						
Rated current I_nAAC three-phase current			A	630	800	1000
Rated current I_nADC direct current			A	910	1150	1490
Impedance per unit length of conducting paths with 50 Hz and 20 °C ambient temperature (cold bars)						
• Equivalent resistance		R_{20}	mΩ/m	0.093	0.073	0.051
• Positive reactance		X_{20}	mΩ/m	0.065	0.058	0.058
• Impedance		Z_{20}	mΩ/m	0.113	0.094	0.077
Impedance per unit length of conducting paths with 50 Hz and 20 °C ambient temperature (bar under operating conditions warm)						
• Equivalent resistance		R_1	mΩ/m	0.134	0.098	0.066
• Positive reactance		X_1	mΩ/m	0.065	0.057	0.057
• Impedance		Z_1	mΩ/m	0.149	0.114	0.088
• Warm resistance / Direct current per pole		R'_{dc_warm}	mΩ/m	0.062	0.050	0.034
Impedance of conducting paths in event of a fault						
• AC resistance per unit length		R_F	mΩ/m	0.199	0.225	0.157
• Positive reactance per unit length		X_F	mΩ/m	0.179	0.239	0.240
• Impedance per unit length		Z_F	mΩ/m	0.268	0.328	0.287
Zero sequence impedance acc. to IEC/EN 60909 (VDE 0102)	Phase to N	R_0	mΩ/m	0.432	0.494	0.340
		X_0	mΩ/m	0.329	0.312	0.301
		Z_0	mΩ/m	0.543	0.584	0.454
	Phase to PE	R_0	mΩ/m	0.429	0.438	0.408
		X_0	mΩ/m	0.377	0.280	0.273
		Z_0	mΩ/m	0.571	0.520	0.491
Short-circuit strength						
• Rated peak withstand current I_{pk}			kA	64	84	90
• Rated short-time withstand current I_{cw}		t = 1 s	kA	26	32	34
		t = 0.1 s	kA	32	40	43
Number of conductors				5	5	5
Conductor cross-section		L1, L2, L3	mm^2	381	446	699
		N	mm^2	381	446	699
		PE	mm^2	381	446	699
Conductor material				Al	Al	Al
Max. fixing distances of trunking units at normal mechanical load						
• Edgewise			m	3.5	3.5	3
• Edgewise with BD2-BD[1)]			m	1.75	1.75	1.5
• Flat			m	3	3	2.5
Fire load[2)]			kWh/m	2	2	2

1) When using BD2-BD spacer bracket.

2) Values for trunking units with tap-off points.
For more values, see page 4/23.

General data

Trunking units with copper conductor

Type				BD2C-.-160	BD2C-.-250	BD2C-.-400
Conducting paths						
Rated insulation voltage U_i			V AC/DC	690/800	690/800	690/800
Rated operational voltage U_e			V AC	690	690	690
Frequency			Hz	50 ... 60	50 ... 60	50 ... 60
Rated current I_n						
Rated current I_nAAC three-phase current			A	160	250	400
Rated current I_nADC direct current			A	277	390	630
Impedance per unit length of conducting paths with 50 Hz and 20 °C ambient temperature (cold bars)						
• Equivalent resistance		R_{20}	mΩ/m	0.303	0.295	0.144
• Positive reactance		X_{20}	mΩ/m	0.157	0.158	0.119
• Impedance		Z_{20}	mΩ/m	0.341	0.335	0.187
Impedance per unit length of conducting paths with 50 Hz and 20 °C ambient temperature (bar under operating conditions warm)						
• Equivalent resistance		R_1	mΩ/m	0.333	0.383	0.181
• Positive reactance		X_1	mΩ/m	0.157	0.159	0.120
• Impedance		Z_1	mΩ/m	0.368	0.419	0.217
• Warm resistance / Direct current per pole		R'_{dc_warm}	mΩ/m	0.218	0.218	0.093
Impedance of conducting paths in event of a fault						
• AC resistance per unit length		R_F	mΩ/m	0.666	0.674	0.364
• Positive reactance per unit length		X_F	mΩ/m	0.511	0.530	0.461
• Impedance per unit length		Z_F	mΩ/m	0.839	0.858	0.587
Zero sequence impedance acc. to IEC/EN 60909 (VDE 0102)	Phase to N	R_0	mΩ/m	1.419	1.429	0.718
		X_0	mΩ/m	0.691	0.703	0.658
		Z_0	mΩ/m	1.579	1.593	0.974
	Phase to PE	R_0	mΩ/m	1.027	1.139	0.672
		X_0	mΩ/m	0.641	0.530	0.503
		Z_0	mΩ/m	1.211	1.256	0.839
Short-circuit strength						
• Rated peak withstand current I_{pk}			kA	17	32	40
• Rated short-time withstand current I_{cw}		t = 1 s	kA	5.5	10	16
		t = 0.1 s	kA	10	16	20
Number of conductors				5	5	5
Conductor cross-section		L1, L2, L3	mm²	63	63	146
		N	mm²	63	63	146
		PE	mm²	63	63	146
Conductor material				Cu	Cu	Cu
Max. fixing distances of trunking units at normal mechanical load						
• Edgewise			m	4	4	4
• Edgewise with BD2-BD[1)]			m	4	4	4
• Flat			m	3.5	3.5	3.5
Fire load[2)]			kWh/m	1.32	1.32	1.32

1) When using BD2-BD spacer bracket.

2) Values for trunking units with tap-off points.
For more values, see page 4/23.

Trunking units with copper conductor

Type				BD2C-.-630	BD2C-.-800	BD2C-.-1000	BD2C-.-1250
Conducting paths							
Rated insulation voltage U_i			V AC/DC	690/800	690/800	690/800	690/800
Rated operational voltage U_e			V AC	690	690	690	690
Frequency			Hz	50 ... 60	50 ... 60	50 ... 60	50 ... 60
Rated current I_n							
Rated current I_nAAC three-phase current			A	630	800	1000	1250
Rated current I_nADC direct current			A	910	1150	1490	1940
Impedance per unit length of conducting paths with 50 Hz and 20 °C ambient temperature (cold bars)							
• Equivalent resistance		R_{20}	mΩ/m	0.053	0.053	0.043	0.032
• Positive reactance		X_{20}	mΩ/m	0.064	0.064	0.056	0.054
• Impedance		Z_{20}	mΩ/m	0.083	0.083	0.071	0.063
Impedance per unit length of conducting paths with 50 Hz and 20 °C ambient temperature (bar under operating conditions warm)							
• Equivalent resistance		R_1	mΩ/m	0.076	0.076	0.056	0.041
• Positive reactance		X_1	mΩ/m	0.064	0.064	0.056	0.054
• Impedance		Z_1	mΩ/m	0.100	0.100	0.079	0.068
• Warm resistance / Direct current per pole		R'_{dc_warm}	mΩ/m	0.033	0.033	0.030	0.019
Impedance of conducting paths in event of a fault							
• AC resistance per unit length		R_F	mΩ/m	0.102	0.102	0.118	0.094
• Positive reactance per unit length		X_F	mΩ/m	0.146	0.146	0.234	0.229
• Impedance per unit length		Z_F	mΩ/m	0.178	0.178	0.262	0.248
Zero sequence impedance acc. to IEC/EN 60909 (VDE 0102)	Phase to N	R_0	mΩ/m	0.280	0.280	0.234	0.186
		X_0	mΩ/m	0.377	0.377	0.286	0.275
		Z_0	mΩ/m	0.470	0.470	0.370	0.332
	Phase to PE	R_0	mΩ/m	0.289	0.289	0.230	0.174
		X_0	mΩ/m	0.321	0.321	0.278	0.265
		Z_0	mΩ/m	0.431	0.431	0.361	0.317
Short-circuit strength							
• Rated peak withstand current I_{pk}			kA	64	84	90	90
• Rated short-time withstand current I_{cw}		t = 1 s	kA	26	32	34	34
		t = 0.1 s	kA	32	40	43	43
Number of conductors				5	5	5	5
Conductor cross-section		L1, L2, L3	mm^2	415	415	468	699
		N	mm^2	415	415	468	699
		PE	mm^2	415	415	468	699
Conductor material				Cu	Cu	Cu	Cu
Max. fixing distances of trunking units at normal mechanical load							
• Edgewise			m	4	3.5	3	2
• Edgewise with BD2-BD[1)]			m	2	1.75	1.5	1
• Flat			m	3.5	3	2.5	1.5
Fire load[2)]			kWh/m	2	2	2	2

1) When using BD2-BD spacer bracket.

2) Values for trunking units with tap-off points.
For more values, see page 4/23.

General data

Feeding units

Conductor cross-sections (geometric)[1)]

Version	Type	L1, L2, L3 min. mm²	L1, L2, L3 max. mm²	N min. mm²	N max. mm²	PE min. mm²	PE max. mm²	Size of terminal screws, bolts L1, L2, L3, N, PE
Feeding units with bolt terminal	BD2.-250-EE	(1–3) × 6	1 × 150, 2 × 70	(1–3) × 6	1 × 150, 2 × 70	(1–3) × 6	1 × 150, 2 × 70	M10
	BD2.-400-EE	(1–3) × 10 [2)]	1 × 240, 2 × 120	(1–3) × 10 [2)]	1 × 240, 2 × 120	(1–3) × 10 [2)]	1 × 240, 2 × 120	M12
	BD2.-1000-EE	(1–3) × 10 [2)]	3 × 240	(1–3) × 10 [2)]	3 × 240	(1–3) × 10 [2)]	2 × 240, 3 × 185	M12
	BD2.-1250-EE	(1–4) × 10 [2)]	3 × 300, 4 × 240	(1–4) × 10 [2)]	3 × 300, 4 × 240	(1–4) × 10 [2)]	3 × 300, 4 × 240	M12
Feeding units with switch disconnector	BD2C-250 (315)-EESC	1 × 10 [2)]	1 × 240	1 × 10 [2)]	1 × 240	Armoring		M10
	BD2C-400-EESC	1 × 10 [2)]	1 × 240, 2 × 120	1 × 10 [2)]	1 × 240, 2 × 120	Armoring		M12
	BD2C-630 (800) -EESC	1 × 10 [2)]	2 × 240	1 × 10 [2)]	2 × 240	Armoring		M12
Center feeding units with bolt terminal	BD2.-400-ME	(1–3) × 10 [2)]	2 × 240, 3 × 185	(1–3) × 10 [2)]	2 × 240, 3 × 185	(1–3) × 10 [2)]	2 × 240, 3 × 185	M12
	BD2.-1000-ME	(1–5) × 10 [2)]	(1–5) × 300	(1–5) × 10 [2)]	(1–5) × 300	(1–5) × 10 [2)]	(1–5) × 300	M12

[1)] Conductor cross-sections relate to Cu cables.
Cross-sections and diameters for Al cables on request.

[2)] Minimum possible cable cross-section for cable lugs.

Cable and wiring entries

Type		BD2.-250-EE	BD2.-400-EE	BD2.-1000-EE, BD2.-400-ME	BD2.-1000-ME	BD2.-1250-EE
Cable grommets		1 × KT3[1)]	2 × KT4[1)]	3 × KT4[1)]	6 × KT4[1)]	4 × KT4[1)]
For cable diameter	mm	14 ... 54	14 ... 68	14 ... 68	14 ... 68	14 ... 68

[1)] With strain relief.

4

Cable entry plate for single-conductor configuration (undrilled cable entry plates)

Type	BD2.-250-EE	BD2.-400-EE	BD2.-1000-EE	BD2.-1250-EE
Cable entry plate	BD2-250-EBAL	BD2-400-EBAL	BD2-1000-EBAL	BD2-1250-EBAL
Number of cable entries (maximum)	10 × M32, 5 × M40	10 × M40	15 × M40, 6 × M50 and 4 × M40	20 × M40

Use plastic cable glands with strain relief (not included in scope of supply).

Cable entry plate for single-conductor configuration with center feeding units (undrilled cable entry plates)

Type	BD2.-400-ME...	BD2.-1000-ME
Cable entry plate	BD2-400-MBAL	BD2-1000-MBAL
Number of cable entries (maximum)	12 × M40 and 3 × M32, 6 × M50 and 4 × M40	31 × M40, 16 × M50 and 4 × M40

Use plastic cable glands with strain relief (not included in scope of supply).

Tap-off units

Conductor cross-sections (geometric)[1)]

Designation	Type	L1, L2, L3 min. mm²	L1, L2, L3 max. mm²	N min. mm²	N max. mm²	PE min. mm²	PE max. mm²	Size of terminal screws, bolts L1, L2, L3, PE, N
Up to 25 A	BD2-AK1/S14	0.5 (f, st)	4 (so)	1 (so, f, st)	6 (so, st)	1 (so, f, st)	6 (so, st)	--
	BD2-AK1/S18	0.5 (f, st)	16 (so, f, st)	1 (so, f, st)	6 (so, st)	1 (so, f, st)	6 (so, st)	--
	BD2-AK1/A...	0.75 (so, st)	16 (so)	1 (so, f, st)	6 (so, st)	1 (so, f, st)	6 (so, st)	--
	BD2-AK1/A...N	0.75 (so, st)	16 (so)	0.75 (so, st)	16 (so)	1 (so, f, st)	6 (so, st)	--
	BD2-AK1/F...	0.75 (so, st)	16 (so)	1 (so, st)	6 (so)	1 (so, f, st)	6 (so, st)	--
	BD2-AK1/F...N	0.75 (so, st)	16 (so)	0.75 (so, st)	16 (so)	1 (so, f, st)	6 (so, st)	--
Up to 63 A	BD2-AK.2X/S18	0.5 (f, st)	25 (f, st)	1 (so, f, st)	16 (so, st)	1 (so, f, st)	16 (so, st)	--
	BD2-AK.2X/S27	0.75 (f, st)	10 (so, f, st)	1 (so, f, st)	6 (so, st)	1 (so, f, st)	6 (so, st)	--
	BD2-AK.2X/S33	1.5 (f, st)	25 (f, st)	2.5 (so, f, st)	16 (so, st)	2.5 (so, f, st)	16 (so, st)	--
	BD2-AK.2M2/A...	0.75 (so, st)	25 (st)	2.5 (so, f, st)	25 (st)	2.5 (so, f, st)	25 (st)	--
	BD2-AK.2M2/A...N	0.75 (so, st)	25 (st)	0.75 (so, f, st)	25 (st)	2.5 (so, f, st)	25 (st)	--
	BD2-AK.2X/F...	0.75 (so, st)	25 (st)	2.5 (so, f, st)	25 (st)	2.5 (so, f, st)	25 (st)	--
	BD2-AK.2X/GB32...	0.75 (so, st)	16 (so, st)	0.75 (so, st)	16 (so, st)	Armoring	--	--
	BD2-AK.2X/GB63...	0.75 (so, st)	50 (st)	0.75 (so, st)	50 (st)	Armoring	--	--
Up to 125 A	BD2-AK03X/F... (FS...)	2.5 (so, st)	50 (st)	2.5 (so, st)	50 (st)	2.5 (so, st)	50 (st)	--
	BD2-AK03X/LSD40-LSD125	2.5 (so, st)	50 (st)	2.5 (so, st)	50 (st)	2.5 (so, st)	50 (st)	--
	BD2-AK3X/GS00	16	50	16	50	10	50	M8
	BD2-AK.3X/GSTZ(A)00	16	70	16	70	10	70	M8
	BD2-AK.3X/GB100...	6 (so, st)	70 (st)	6 (so, st)	70 (st)	Armoring	--	--
Up to 250 A	BD2-AK04/SNH1	6	150	6	150	6	150	M10
	BD2-AK04/FS...	6	150	6	150	6	150	M10
	BD2-AK04/LS...	6	120 (st)	6 (so, st)	150	6	150	M8
Up to 400 A	BD2-AK05/SNH2	10	2 × 120	10	2 × 120	10	2 × 120	M10
	BD2-AK05/FS...	10	2 × 120	10	2 × 120	10	2 × 120	M10
	BD2-AK05/LS...	10	2 × 120	10	2 × 120	10	2 × 120	M10
Up to 530 A	BD2-AK06/SNH3	10	2 × 240	10	2 × 240	10	2 × 240	M12
	BD2-AK06/LS...	10	2 × 240	10	2 × 240	10	2 × 240	M12

so = solid, st = stranded, f = finely stranded with end sleeve

1) Conductor cross-sections relate to Cu cables.
Cross-sections and diameters for Al cables on request.

Cable and wiring entries

Type		BD2-AK1/...	BD2-AK.2...	BD2-AK.3...	BD2-AK04	BD2-AK05	BD2-AK06
Cable grommets		M25[1)]	–	–	KT3[2)]	2 × KT4[2)]	2 × KT4[2)]
Cable glands[3)]		–	M25, M32, M40	M25, M63	–	–	–
For cable diameter[4)]	mm	11 ... 16	11 ... 27	11 ... 42	14 ... 54	14 ... 68	14 ... 68
Min./max. cable entry capacity for multi-core cables							
• NYY...	mm²	5 × 1.5 to 5 × 4	5 × 1.5 to 5 × 16	5 × 1.5 to 5 × 25	–	–	–
• NYCWY...[5)]	mm²	4 × 1.5 to 4 × 2.5	4 × 1.5 to 4 × 16	4 × 1.5 to 4 × 70	5 × 1.5 to 4 × 150	2 × 5 × 1.5 to 2 × 4 × 150	2 × 5 × 10 to 2 × 4 × 240
Cable entry plate for singe-core cable (plates fitted, undrilled)							
• Max. number of cable entries		–	–	–	10 × M40	10 × M32, 5 × M40	10 × M40

1) Strain relief in BD2-AK1/...

2) With strain relief.

3) For cable glands: Use plastic cable glands with strain relief (not included in scope of supply).

4) Diameter values relate to Cu cables.
Cross-sections and diameters for Al cables on request.

5) Fifth conductor: Concentric conductor.

Connection of aluminum cables in tap-off units, incoming cable connection units

When using aluminum cables, special connection conditions must be taken into account.

Cable lug, connection accessories

- When using special aluminum/copper cable lugs, the connection accessories delivered as standard can be used.
- When using aluminum cable lugs with copper insert, the connection accessories delivered as standard can be used if the diameter of the copper insert is at least equal or greater than the outside diameter of the delivered conical spring washer.
- When using aluminum cable lugs without copper insert, an additional "oversized" plain washer* (acc. to ISO 7093) must be added to each cable lug (see ex.). This may require the delivered bolt to be replaced by a longer bolt*.

  The aluminum cable lug used must be galvanically tinned.

Example: Connection of cable lug to connection lug

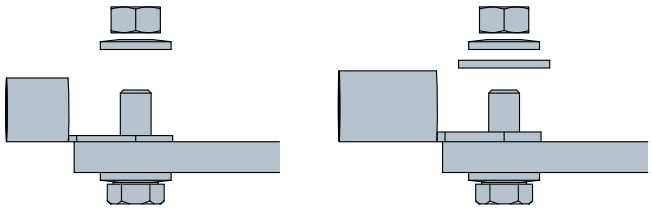

Connection of copper cable lug with standard connection accessories

Connection of aluminum cable lug with additional washer according to ISO 7093

Insertion in tap-off and feeding units

Due to the numerous manufacturers of aluminum cables and aluminum cable lugs available on the market, with partly differing dimensions, the customer must check to which extent the cable lugs and aluminum cables can be inserted in the tap-off or feeding units and connected.

In this context, the manufacturer specifications for the bending radii of the cables must be particularly observed. Insertion at the front side is recommended.

Particular attention must be paid to compliance with clearances in air and creepage distances at the connection lugs. Additional measures may be required (e.g. with phase barriers, insulation of cable lugs, etc.).

Fire loads

Type (without single-bolt joint block)	Fire load kWh/m
Trunking units	
BD2.-.-160-SB-.	1.32
BD2.-.-160-WB-.	1.32
BD2.-.-250-SB-.	1.32
BD2.-.-250-WB-.	1.32
BD2.-.-400-SB-.	1.32
BD2.-.-400-WB-.	1.32
BD2.-.-400-SO-.	0.60
BD2.-.-400-WO-.	0.60
BD2.-.-630-SB-.	2.00
BD2.-.-630-WB-.	2.00
BD2.-.-630-SO-.	0.67
BD2.-.-630-WO-.	0.67
BD2.-.-800-SB-.	2.00
BD2.-.-800-WB-.	2.00
BD2.-.-800-SO-.	0.67
BD2.-.-800-WO-.	0.67
BD2.-.-1000-SB-.	2.00
BD2.-.-1000-WB-.	2.00
BD2.-.-1000-SO-.	0.67
BD2.-.-1000-WO-.	0.67
BD2.-.-1250-SB-.	2.00
BD2.-.-1250-WB-.	2.00
BD2.-.-1250-SO-.	0.67
BD2.-.-1250-WO-.	0.67
Junction units	
BD2.-400-L..	1.27
BD2.-400-Z..	1.88
BD2.-1000-L..	1.27
BD2.-1000-Z..	1.88
BD2.-1250-L..	1.27
BD2.-1250-Z..	1.88
BD2.-400-T..	2.00
BD2.-1000-T..	2.00
BD2.-1250-T..	2.00
Feeding units	kWh
BD2.-250-EE	3.20
BD2.-250-VE	3.00
BD2.-400-EE	3.50
BD2.-400-ME	3.90
BD2.-400-VE	3.20
BD2.-1000-EE	3.80
BD2.-1250-EE	4.10
BD2.-1000-VE	3.60
BD2.-1250-VE	4.00
BD2-1000-ME	8.10
Ancillary equipment units	
BD2-GKX/F	0.4
BD2-GKM2/F	1.5

Type	Fire load kWh
Tap-off units	
BD2-AK1/S14	6.9
BD2-AK1/S18	6.9
BD2-AK1/A163	5.83
BD2-AK1/CEE165S14	8.5
BD2-AK1/CEE165A163	8.7
BD2-AK1/2CEE163S14	9.5
BD2-AK1/2CEE163A161	7.5
BD2-AK1/3SD163S14	8
BD2-AK1/3SD163A161	8.3
BD2-AK.2X/S18	4.8
BD2-AK.2X/S27	2.94
BD2-AK.2X/S33	2.94
BD2-AK2X/CEE325S33	4.57
BD2-AK.2M2/A323	5.1
BD2-AK2M2/CEE325A323	6.7
BD2-AK2X/CEE635S33	5.8
BD2-AK2X/2CEE165S14	7.9
BD2-AK2X/2CEE165S27/FORMP	6.1
BD2-AK2M2/2SD163CEE165A163	6.9
BD2-AK2M2/2CEE165A163	9.4
BD2-AK.2M2/A323N	5.1
BD2-AK.2M2/A633	5
BD2-AK.2M2/A633N	5.3
BD2-AK.2X/F1451-3(N)	5.9
BD2-AK.2X/F2258-3(N)	6.1
BD2-AK.2X/F1451-3(N)	5.9
BD2-AK.3X/GS00	8.07
BD2-AK.3X/GST.00	9.07
BD2-AK03M2/A1253(N)	5.7
BD2-AK04/SNH1	10.12
BD2-AK04/FS...-3	16.65
BD2-AK04/FS...-4	20.0
BD2-AK05/SNH2	12.16
BD2-AK05/FS...-3	18.6
BD2-AK05/FS...-4	22.0
BD2-AK06/SNH3	14.2
BD2-AK03/LS.- …	13.00
BD2-AK04/LS.- …	20.00
BD2-AK05/LS.- …	23.00
BD2-AK06/LS.- …	26.00
BD2-AK06/LS.- … (3VA25/ 3VA15)	29.00
Additional equipment	
BD2-400-EK	1.64
BD2-400-FE	–
BD2-400-BB	–
BD2-400-HF	–
BD2-400-HFE	–
BD2-400-VF	–

Type	Fire load kWh
BD2-1250-EK	2.46
BD2-1250-FE	–
BD2-1250-BB	–
BD2-1250-HF	–
BD2-1250-HFE	–
BD2-1250-VF	–
BD2-FFE	–
BD2-FF	–
BD2-FAS	–
BD2-AK...-IP55	–
BD2-400-FS.	–
BD2-1250-FS.	–
BD2-SD163	0.1
BD2-CEE163	0.2
BD2-CEE165	0.2
BD2-CEE325	0.3
BD2-AG	–
BD2-APO	–
BD2-APM	–

Selection and ordering data

Version	Rated current I_{nA}	Length	Tap-off points Number	Tap-off points Spacing	SD	Tap-off point distance 0.5 m L1, L2, L3, N, PE Type	Article No.	PS*/ P. unit	Weight per unit approx.
	A	m		m	d				kg
Standard lengths, with tap-off points on both sides									
With joint block 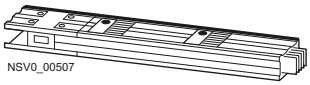 NSV0_00507	160	3.25	12	0.5	X	**BD2A-3-160-SB-3**	**BVP:261480**	1 unit	20.000
		2.25	8	0.5	X	**BD2A-3-160-SB-2**	**BVP:261479**	1 unit	14.000
		1.25	4	0.5	X	**BD2A-3-160-SB-1**	**BVP:261478**	1 unit	8.400
	250	3.25	12	0.5	X	**BD2A-3-250-SB-3**	**BVP:261483**	1 unit	22.200
		2.25	8	0.5	X	**BD2A-3-250-SB-2**	**BVP:261482**	1 unit	16.500
		1.25	4	0.5	X	**BD2A-3-250-SB-1**	**BVP:261481**	1 unit	8.600
	400	3.25	12	0.5	X	**BD2A-3-400-SB-3**	**BVP:261489**	1 unit	26.000
		2.25	8	0.5	X	**BD2A-3-400-SB-2**	**BVP:261488**	1 unit	19.000
		1.25	4	0.5	X	**BD2A-3-400-SB-1**	**BVP:261487**	1 unit	12.000
	630	3.25	12	0.5	X	**BD2A-3-630-SB-3**	**BVP:261501**	1 unit	39.900
		2.25	8	0.5	X	**BD2A-3-630-SB-2**	**BVP:261500**	1 unit	27.500
		1.25	4	0.5	X	**BD2A-3-630-SB-1**	**BVP:261499**	1 unit	19.100
	800	3.25	12	0.5	X	**BD2A-3-800-SB-3**	**BVP:261507**	1 unit	39.900
		2.25	8	0.5	X	**BD2A-3-800-SB-2**	**BVP:261506**	1 unit	27.500
		1.25	4	0.5	X	**BD2A-3-800-SB-1**	**BVP:261505**	1 unit	19.100
	1000	3.25	12	0.5	X	**BD2A-3-1000-SB-3**	**BVP:261513**	1 unit	51.000
		2.25	8	0.5	X	**BD2A-3-1000-SB-2**	**BVP:261512**	1 unit	35.000
		1.25	4	0.5	X	**BD2A-3-1000-SB-1**	**BVP:261511**	1 unit	23.200
Standard lengths, without tap-off points									
With joint block  NSV0_00508	400	3.25	--	--	X	**BD2A-3-400-SO-3**	**BVP:261492**	1 unit	25.300
		2.25	--	--	X	**BD2A-3-400-SO-2**	**BVP:261491**	1 unit	19.000
		1.25	--	--	X	**BD2A-3-400-SO-1**	**BVP:261490**	1 unit	12.000
	630	3.25	--	--	X	**BD2A-3-630-SO-3**	**BVP:261504**	1 unit	40.900
		2.25	--	--	X	**BD2A-3-630-SO-2**	**BVP:261503**	1 unit	28.500
		1.25	--	--	X	**BD2A-3-630-SO-1**	**BVP:261502**	1 unit	19.600
	800	3.25	--	--	X	**BD2A-3-800-SO-3**	**BVP:261510**	1 unit	40.900
		2.25	--	--	X	**BD2A-3-800-SO-2**	**BVP:261509**	1 unit	28.500
		1.25	--	--	X	**BD2A-3-800-SO-1**	**BVP:261508**	1 unit	19.600
	1000	3.25	--	--	X	**BD2A-3-1000-SO-3**	**BVP:261516**	1 unit	52.000
		2.25	--	--	X	**BD2A-3-1000-SO-2**	**BVP:261515**	1 unit	36.000
		1.25	--	--	X	**BD2A-3-1000-SO-1**	**BVP:261514**	1 unit	23.700
Standard length, adaptable by the customer, without tap-off points									
With joint block  NSV0_00508	400	1.25	--	--	X	**BD2A-400-WO-AL**	**BVP:611350**	1 unit	12.000
	1000	1.25	--	--	X	**BD2A-1000-WO-AL**	**BVP:611351**	1 unit	23.700

Special colors available on request.

Version	SD	Type suffix	Article No.	PS*/ P. unit	Weight per unit
	d				kg
Fire barriers (optional)					
Fire barriers EI 90	X	**+BD2-S90-BX*-M***	**BVP:931956**	1 unit	1.000
Fire barriers EI 120	X	**+BD2-S120-BX*-M***	**BVP:931959**	1 unit	1.500

For BX* you must specify the required dimension in meters from the center of the joint block (end without joint block) to the center of the fire wall or fire ceiling, for -M* specify the wall or ceiling thickness.

For the configuration of the fire barrier, see page 4/87.

For approval in Germany:
BD2-S90(S120)-ZUL-D fire barrier approval kit,
see page 4/62.

For information on DC application, see page 4/94.

* You can order this quantity or a multiple thereof.

With aluminum busbars

Version	Rated current I_{nA}	Length	Tap-off points Number	Tap-off points Spacing	SD	**Tap-off point distance 0.5 m L1, L2, L3, N, PE** Type	Article No.	PS*/ P. unit	Weight per unit approx.
	A	m		m	d				kg
Optional lengths, with tap-off points on both sides									
With joint block 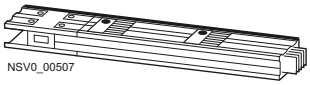 NSV0_00507	160	2.26 ... 3.24	8 ... 12	0.5	X	**BD2A-3-160-WB-3W***	**BVP:261517**	1 unit	20.000
		1.26 ... 2.24	4 ... 8	0.5	X	**BD2A-3-160-WB-2W***	**BVP:261518**	1 unit	15.000
	250	2.26 ... 3.24	8 ... 12	0.5	X	**BD2A-3-250-WB-3W***	**BVP:261519**	1 unit	21.900
		1.26 ... 2.24	4 ... 8	0.5	X	**BD2A-3-250-WB-2W***	**BVP:261520**	1 unit	16.300
	400	2.26 ... 3.24	8 ... 12	0.5	X	**BD2A-3-400-WB-3W***	**BVP:261523**	1 unit	25.300
		1.26 ... 2.24	4 ... 8	0.5	X	**BD2A-3-400-WB-2W***	**BVP:261524**	1 unit	18.500
	630	2.26 ... 3.24	8 ... 12	0.5	X	**BD2A-3-630-WB-3W***	**BVP:261527**	1 unit	45.900
		1.26 ... 2.24	4 ... 8	0.5	X	**BD2A-3-630-WB-2W***	**BVP:261528**	1 unit	31.500
	800	2.26 ... 3.24	8 ... 12	0.5	X	**BD2A-3-800-WB-3W***	**BVP:261529**	1 unit	45.900
		1.26 ... 2.24	4 ... 8	0.5	X	**BD2A-3-800-WB-2W***	**BVP:261530**	1 unit	31.500
	1000	2.26 ... 3.24	8 ... 12	0.5	X	**BD2A-3-1000-WB-3W***	**BVP:261531**	1 unit	57.000
		1.26 ... 2.24	4 ... 8	0.5	X	**BD2A-3-1000-WB-2W***	**BVP:261532**	1 unit	39.000
Optional lengths, without tap-off points									
With joint block  NSV0_00508	400	2.26 ... 3.24	--	--	X	**BD2A-3-400-WO-3W***	**BVP:261533**	1 unit	25.300
		1.26 ... 2.24	--	--	X	**BD2A-3-400-WO-2W***	**BVP:261534**	1 unit	18.500
		0.50 ... 1.24	--	--	X	**BD2A-3-400-WO-1W***	**BVP:261535**	1 unit	11.600
	630	2.26 ... 3.24	--	--	X	**BD2A-3-630-WO-3W***	**BVP:261539**	1 unit	45.900
		1.26 ... 2.24	--	--	X	**BD2A-3-630-WO-2W***	**BVP:261540**	1 unit	31.500
		0.50 ... 1.24	--	--	X	**BD2A-3-630-WO-1W***	**BVP:261541**	1 unit	19.900
	800	2.26 ... 3.24	--	--	X	**BD2A-3-800-WO-3W***	**BVP:261542**	1 unit	45.900
		1.26 ... 2.24	--	--	X	**BD2A-3-800-WO-2W***	**BVP:261543**	1 unit	31.500
		0.50 ... 1.24	--	--	X	**BD2A-3-800-WO-1W***	**BVP:261544**	1 unit	19.900
	1000	2.26 ... 3.24	--	--	X	**BD2A-3-1000-WO-3W***	**BVP:261545**	1 unit	57.000
		1.26 ... 2.24	--	--	X	**BD2A-3-1000-WO-2W***	**BVP:261546**	1 unit	39.000
		0.50 ... 1.24	--	--	X	**BD2A-3-1000-WO-1W***	**BVP:261547**	1 unit	24.000

Special colors available on request.

Version	SD	Type suffix	Article No.	PS*/ P. unit	Weight per unit
	d				kg
Fire barriers (optional)					
Fire barriers EI 90	X	**+BD2-S90-BX*-M***	**BVP:931956**	1 unit	1.000
Fire barriers EI 120	X	**+BD2-S120-BX*-M***	**BVP:931959**	1 unit	1.500

For BX* you must specify the required dimension in meters from the center of the joint block (end without joint block) to the center of the fire wall or fire ceiling, for -M* specify the wall or ceiling thickness.

For the configuration of the fire barrier, see page 4/87.

For approval in Germany:
BD2-S90(S120)-ZUL-D fire barrier approval kit,
see page 4/62.

For information on DC application, see page 4/94.

*** You can order this quantity or a multiple thereof.**

Trunking units

With copper busbars

Version	Rated current I_{nA}	Length	Tap-off points Number	Tap-off points Spacing	SD	Tap-off point distance 0.5 m L1, L2, L3, N, PE		PS*/ P. unit	Weight per unit approx.
	A	m		m	d	Type	Article No.		kg
Standard lengths, with tap-off points on both sides									
With joint block 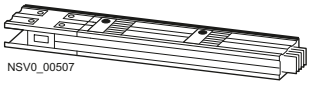 NSV0_00507	160	3.25	12	0.5	X	**BD2C-3-160-SB-3**	**BVP:261712**	1 unit	27.500
		2.25	8	0.5	X	**BD2C-3-160-SB-2**	**BVP:261711**	1 unit	20.100
		1.25	4	0.5	X	**BD2C-3-160-SB-1**	**BVP:261710**	1 unit	10.600
	250	3.25	12	0.5	X	**BD2C-3-250-SB-3**	**BVP:261715**	1 unit	27.500
		2.25	8	0.5	X	**BD2C-3-250-SB-2**	**BVP:261714**	1 unit	20.100
		1.25	4	0.5	X	**BD2C-3-250-SB-1**	**BVP:261713**	1 unit	10.600
	400	3.25	12	0.5	X	**BD2C-3-400-SB-3**	**BVP:261721**	1 unit	34.400
		2.25	8	0.5	X	**BD2C-3-400-SB-2**	**BVP:261720**	1 unit	24.700
		1.25	4	0.5	X	**BD2C-3-400-SB-1**	**BVP:261719**	1 unit	15.100
	630	3.25	12	0.5	X	**BD2C-3-630-SB-3**	**BVP:261733**	1 unit	60.800
		2.25	8	0.5	X	**BD2C-3-630-SB-2**	**BVP:261732**	1 unit	41.900
		1.25	4	0.5	X	**BD2C-3-630-SB-1**	**BVP:261731**	1 unit	26.900
	800	3.25	12	0.5	X	**BD2C-3-800-SB-3**	**BVP:261739**	1 unit	60.800
		2.25	8	0.5	X	**BD2C-3-800-SB-2**	**BVP:261738**	1 unit	41.900
		1.25	4	0.5	X	**BD2C-3-800-SB-1**	**BVP:261737**	1 unit	26.900
	1000	3.25	12	0.5	X	**BD2C-3-1000-SB-3**	**BVP:261745**	1 unit	80.700
		2.25	8	0.5	X	**BD2C-3-1000-SB-2**	**BVP:261744**	1 unit	55.500
		1.25	4	0.5	X	**BD2C-3-1000-SB-1**	**BVP:261743**	1 unit	34.400
	1250	3.25	12	0.5	X	**BD2C-3-1250-SB-3**	**BVP:261751**	1 unit	120.900
		2.25	8	0.5	X	**BD2C-3-1250-SB-2**	**BVP:261750**	1 unit	83.100
		1.25	4	0.5	X	**BD2C-3-1250-SB-1**	**BVP:261749**	1 unit	49.400
Standard lengths, without tap-off points									
With joint block  NSV0_00508	400	3.25	--	--	X	**BD2C-3-400-SO-3**	**BVP:261724**	1 unit	33.700
		2.25	--	--	X	**BD2C-3-400-SO-2**	**BVP:261723**	1 unit	24.700
		1.25	--	--	X	**BD2C-3-400-SO-1**	**BVP:261722**	1 unit	15.100
	630	3.25	--	--	X	**BD2C-3-630-SO-3**	**BVP:261736**	1 unit	61.800
		2.25	--	--	X	**BD2C-3-630-SO-2**	**BVP:261735**	1 unit	42.900
		1.25	--	--	X	**BD2C-3-630-SO-1**	**BVP:261734**	1 unit	27.400
	800	3.25	--	--	X	**BD2C-3-800-SO-3**	**BVP:261742**	1 unit	61.800
		2.25	--	--	X	**BD2C-3-800-SO-2**	**BVP:261741**	1 unit	42.900
		1.25	--	--	X	**BD2C-3-800-SO-1**	**BVP:261740**	1 unit	27.400
	1000	3.25	--	--	X	**BD2C-3-1000-SO-3**	**BVP:261748**	1 unit	81.700
		2.25	--	--	X	**BD2C-3-1000-SO-2**	**BVP:261747**	1 unit	56.500
		1.25	--	--	X	**BD2C-3-1000-SO-1**	**BVP:261746**	1 unit	34.900
	1250	3.25	--	--	X	**BD2C-3-1250-SO-3**	**BVP:261754**	1 unit	121.900
		2.25	--	--	X	**BD2C-3-1250-SO-2**	**BVP:261753**	1 unit	84.100
		1.25	--	--	X	**BD2C-3-1250-SO-1**	**BVP:261752**	1 unit	49.900
Standard length, adaptable by the customer, without tap-off points									
With joint block  NSV0_00508	400	1.25	--	--	X	**BD2C-400-WO-AL**	**BVP:611352**	1 unit	15.100
	1250	1.25	--	--	X	**BD2C-1250-WO-AL**	**BVP:611353**	1 unit	49.900

Special colors available on request.

Version	SD	Type suffix	Article No.	PS*/ P. unit	Weight per unit
	d				kg
Fire barriers (optional)					
Fire barriers EI 90	X	**+BD2-S90-BX*-M***	**BVP:931956**	1 unit	1.000
Fire barriers EI 120	X	**+BD2-S120-BX*-M***	**BVP:931959**	1 unit	1.500

For BX* you must specify the required dimension in meters from the center of the joint block (end without joint block) to the center of the fire wall or fire ceiling, for -M* specify the wall or ceiling thickness.

For the configuration of the fire barrier, see page 4/87.

For approval in Germany:
BD2-S90(S120)-ZUL-D fire barrier approval kit
see page 4/62.

For information on DC application, see page 4/94.

* You can order this quantity or a multiple thereof.

With copper busbars

Version	Rated current I_{nA}	Length	Tap-off points Number	Tap-off points Spacing	SD	**Tap-off point distance 0.5 m L1, L2, L3, N, PE** Type	Article No.	PS*/ P. unit	Weight per unit approx.
	A	m		m	d				kg
Optional lengths, with tap-off points on both sides									
With joint block 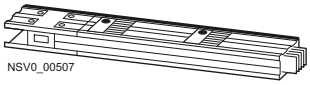 NSV0_00507	160	2.26 ... 3.24	8 ... 12	0.5	X	**BD2C-3-160-WB-3W***	**BVP:261755**	1 unit	27.200
		1.26 ... 2.24	4 ... 8	0.5	X	**BD2C-3-160-WB-2W***	**BVP:261756**	1 unit	19.900
	250	2.26 ... 3.24	8 ... 12	0.5	X	**BD2C-3-250-WB-3W***	**BVP:261757**	1 unit	27.200
		1.26 ... 2.24	4 ... 8	0.5	X	**BD2C-3-250-WB-2W***	**BVP:261758**	1 unit	19.900
	400	2.26 ... 3.24	8 ... 12	0.5	X	**BD2C-3-400-WB-3W***	**BVP:261761**	1 unit	33.700
		1.26 ... 2.24	4 ... 8	0.5	X	**BD2C-3-400-WB-2W***	**BVP:261762**	1 unit	24.200
	630	2.26 ... 3.24	8 ... 12	0.5	X	**BD2C-3-630-WB-3W***	**BVP:261765**	1 unit	66.800
		1.26 ... 2.24	4 ... 8	0.5	X	**BD2C-3-630-WB-2W***	**BVP:261766**	1 unit	45.900
	800	2.26 ... 3.24	8 ... 12	0.5	X	**BD2C-3-800-WB-3W***	**BVP:261767**	1 unit	66.800
		1.26 ... 2.24	4 ... 8	0.5	X	**BD2C-3-800-WB-2W***	**BVP:261768**	1 unit	45.900
	1000	2.26 ... 3.24	8 ... 12	0.5	X	**BD2C-3-1000-WB-3W***	**BVP:261769**	1 unit	86.700
		1.26 ... 2.24	4 ... 8	0.5	X	**BD2C-3-1000-WB-2W***	**BVP:261770**	1 unit	59.500
	1250	2.26 ... 3.24	8 ... 12	0.5	X	**BD2C-3-1250-WB-3W***	**BVP:261771**	1 unit	126.900
		1.26 ... 2.24	4 ... 8	0.5	X	**BD2C-3-1250-WB-2W***	**BVP:261772**	1 unit	87.100
Optional lengths, without tap-off points									
With joint block  NSV0_00508	400	2.26 ... 3.24	--	--	X	**BD2C-3-400-WO-3W***	**BVP:261773**	1 unit	33.700
		1.26 ... 2.24	--	--	X	**BD2C-3-400-WO-2W***	**BVP:261774**	1 unit	24.200
		0.50 ... 1.24	--	--	X	**BD2C-3-400-WO-1W***	**BVP:261775**	1 unit	14.700
	630	2.26 ... 3.24	--	--	X	**BD2C-3-630-WO-3W***	**BVP:261779**	1 unit	66.800
		1.26 ... 2.24	--	--	X	**BD2C-3-630-WO-2W***	**BVP:261780**	1 unit	45.900
		0.50 ... 1.24	--	--	X	**BD2C-3-630-WO-1W***	**BVP:261781**	1 unit	27.700
	800	2.26 ... 3.24	--	--	X	**BD2C-3-800-WO-3W***	**BVP:261782**	1 unit	66.800
		1.26 ... 2.24	--	--	X	**BD2C-3-800-WO-2W***	**BVP:261783**	1 unit	45.900
		0.50 ... 1.24	--	--	X	**BD2C-3-800-WO-1W***	**BVP:261784**	1 unit	27.700
	1000	2.26 ... 3.24	--	--	X	**BD2C-3-1000-WO-3W***	**BVP:261785**	1 unit	86.700
		1.26 ... 2.24	--	--	X	**BD2C-3-1000-WO-2W***	**BVP:261786**	1 unit	59.500
		0.50 ... 1.24	--	--	X	**BD2C-3-1000-WO-1W***	**BVP:261787**	1 unit	34.900
	1250	2.26 ... 3.24	--	--	X	**BD2C-3-1250-WO-3W***	**BVP:261788**	1 unit	126.900
		1.26 ... 2.24	--	--	X	**BD2C-3-1250-WO-2W***	**BVP:261789**	1 unit	87.100
		0.50 ... 1.24	--	--	X	**BD2C-3-1250-WO-1W***	**BVP:261790**	1 unit	50.200

Special colors available on request.

Version	SD	Type suffix	Article No.	PS*/ P. unit	Weight per unit
	d				kg
Fire barriers (optional)					
Fire barriers EI 90	X	**+BD2-S90-BX*-M***	**BVP:931956**	1 unit	1.000
Fire barriers EI 120	X	**+BD2-S120-BX*-M***	**BVP:931959**	1 unit	1.500

For BX* you must specify the required dimension in meters from the center of the joint block (end without joint block) to the center of the fire wall or fire ceiling, for -M* specify the wall or ceiling thickness.

For the configuration of the fire barrier, see page 4/87.

For approval in Germany:
BD2-S90(S120)-ZUL-D fire barrier approval kit
see page 4/62.

For information on DC application, see page 4/94.

*** You can order this quantity or a multiple thereof.**

Selection and ordering data

With aluminum busbars

Version	Length/ Optional length	SD	Rated current I_{nA} 160 A, 250 A, 400 A		PS*/ P. unit	Weight per unit approx.
		d	Type	Article No.		kg
L-units (with joint block)						
(fitted to Y as standard)						
Knee, rear 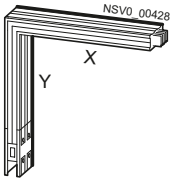	X0.36/ Y0.36	X	**BD2A-400-LH**	**BVP:261793**	1 unit	8.500
	X0.36 ... 1.25/ Y0.36	X	**BD2A-400-LH-X***	**BVP:261846**	1 unit	18.000
	X0.36/ Y0.36 ... 1.25	X	**BD2A-400-LH-Y***	**BVP:261847**	1 unit	18.000
	X0.36 ... 1.25/ Y0.36 ... 1.25	X	**BD2A-400-LH-X*/Y***	**BVP:261848**	1 unit	28.000
Knee, front 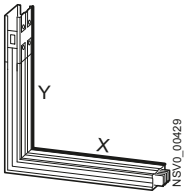	X0.36/ Y0.36	X	**BD2A-400-LV**	**BVP:261796**	1 unit	8.500
	X0.36 ... 1.25/ Y0.36	X	**BD2A-400-LV-X***	**BVP:261849**	1 unit	18.000
	X0.36/ Y0.36 ... 1.25	X	**BD2A-400-LV-Y***	**BVP:261850**	1 unit	18.000
	X0.36 ... 1.25/ Y0.36 ... 1.25	X	**BD2A-400-LV-X*/Y***	**BVP:261851**	1 unit	28.000
Elbow, right 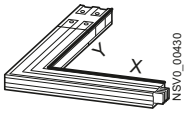	X0.36/ Y0.36	X	**BD2A-400-LR**	**BVP:261795**	1 unit	8.000
	X0.36 ... 1.25/ Y0.36	X	**BD2A-400-LR-X***	**BVP:261852**	1 unit	18.000
	X0.36/ Y0.36 ... 1.25	X	**BD2A-400-LR-Y***	**BVP:261853**	1 unit	18.000
	X0.36 ... 1.25/ Y0.36 ... 1.25	X	**BD2A-400-LR-X*/Y***	**BVP:261854**	1 unit	28.000
Elbow, left 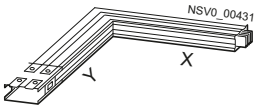	X0.36/ Y0.36	X	**BD2A-400-LL**	**BVP:261794**	1 unit	8.000
	X0.36 ... 1.25/ Y0.36	X	**BD2A-400-LL-X***	**BVP:261855**	1 unit	18.000
	X0.36/ Y0.36 ... 1.25	X	**BD2A-400-LL-Y***	**BVP:261856**	1 unit	18.000
	X0.36 ... 1.25/ Y0.36 ... 1.25	X	**BD2A-400-LL-X*/Y***	**BVP:261857**	1 unit	28.000

Special colors available on request.

Version	SD	Type suffix	Article No.	PS*/ P. unit	Weight per unit approx.
	d				kg
Fire barrier for L-units (optional)					
Fire barrier EI 90 in X dimension	X	**+BD2-S90-BX*-M***	**BVP:931956**	1 unit	1.000
Fire barrier EI 90 in Y dimension	X	**+BD2-S90-BY*-M***	**BVP:931957**	1 unit	1.000
Fire barrier EI 120 in X dimension	X	**+BD2-S120-BX*-M***	**BVP:931959**	1 unit	1.500
Fire barrier EI 120 in Y dimension	X	**+BD2-S120-BY*-M***	**BVP:931960**	1 unit	1.500

For BX* or BY you must specify the required dimension in meters from the center of the joint block (for BX*: end without joint block) to the center of the fire wall or fire ceiling, for -M* specify the wall or ceiling thickness.

For the configuration of the fire barrier, see page 4/87.

For approval in Germany:
BD2-S90(S120)-ZUL-D fire barrier approval kit
see page 4/62.

For information on DC application, see page 4/94.

* You can order this quantity or a multiple thereof.

With aluminum busbars

Version	Length/ Optional length	SD	Rated current I_{nA} 630 A, 800 A, 1000 A		PS*/ P. unit	Weight per unit approx.
		d	Type	Article No.		kg
L-units (with joint block)						
(fitted to Y as standard)						
Knee, rear 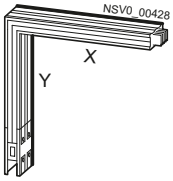	X0.36/ Y0.36	X	**BD2A-1000-LH**	**BVP:261803**	1 unit	17.000
	X0.36 ... 1.25/ Y0.36	X	**BD2A-1000-LH-X***	**BVP:261874**	1 unit	38.000
	X0.36/ Y0.36 ... 1.25	X	**BD2A-1000-LH-Y***	**BVP:261875**	1 unit	38.000
	X0.36 ... 1.25/ Y0.36 ... 1.25	X	**BD2A-1000-LH-X*/Y***	**BVP:261876**	1 unit	59.000
Knee, front 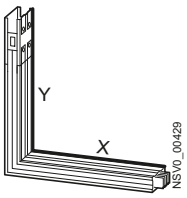	X0.36/ Y0.36	X	**BD2A-1000-LV**	**BVP:261806**	1 unit	17.000
	X0.36 ... 1.25/ Y0.36	X	**BD2A-1000-LV-X***	**BVP:261877**	1 unit	38.000
	X0.36/ Y0.36 ... 1.25	X	**BD2A-1000-LV-Y***	**BVP:261878**	1 unit	38.000
	X0.36 ... 1.25/ Y0.36 ... 1.25	X	**BD2A-1000-LV-X*/Y***	**BVP:261879**	1 unit	59.000
Elbow, right 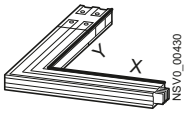	X0.36/ Y0.36	X	**BD2A-1000-LR**	**BVP:261805**	1 unit	17.000
	X0.36 ... 1.25/ Y0.36	X	**BD2A-1000-LR-X***	**BVP:261880**	1 unit	38.000
	X0.36/ Y0.36 ... 1.25	X	**BD2A-1000-LR-Y***	**BVP:261881**	1 unit	38.000
	X0.36 ... 1.25/ Y0.36 ... 1.25	X	**BD2A-1000-LR-X*/Y***	**BVP:261882**	1 unit	59.000
Elbow, left 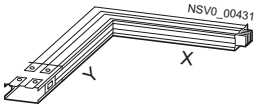	X0.36/ Y0.36	X	**BD2A-1000-LL**	**BVP:261804**	1 unit	17.000
	X0.36 ... 1.25/ Y0.36	X	**BD2A-1000-LL-X***	**BVP:261827**	1 unit	38.000
	X0.36/ Y0.36 ... 1.25	X	**BD2A-1000-LL-Y***	**BVP:261828**	1 unit	38.000
	X0.36 ... 1.25/ Y0.36 ... 1.25	X	**BD2A-1000-LL-X*/Y***	**BVP:261829**	1 unit	59.000

Optional lengths:
For X* and Y* you must specify the required dimension in meters from the center of the joint block to the outside edge of the trunking unit (see also page 4/73).

Special colors available on request.

For information on DC application, see page 4/94.

*** You can order this quantity or a multiple thereof.**

Junction units

With aluminum busbars

Version	Length/ Optional length	SD	Rated current I_{nA} 160 A, 250 A, 400 A		PS*/ P. unit	Weight per unit approx.
		d	Type	Article No.		kg
Z-units (with joint block)						
(fitted to Y as standard)						
Rear 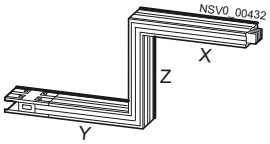	X0.36/ Y0.36/ Z0.14 ... 1.25	X	**BD2A-400-ZH-Z***	**BVP:261814**	1 unit	13.000
	X0.36 ... 0.60/ Y0.36 ... 0.60/ Z0.14 ... 1.25	X	**BD2A-400-ZH-X*/Y*/Z***	**BVP:261822**	1 unit	16.000
Front 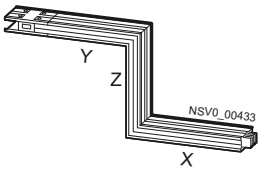	X0.36/ Y0.36/ Z0.14 ... 1.25	X	**BD2A-400-ZV-Z***	**BVP:261813**	1 unit	13.000
	X0.36 ... 0.60/ Y0.36 ... 0.60/ Z0.14 ... 1.25	X	**BD2A-400-ZV-X*/Y*/Z***	**BVP:261821**	1 unit	16.000
Right 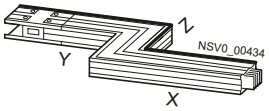	X0.36/ Y0.36/ Z0.34 ... 1.25	X	**BD2A-400-ZR-Z***	**BVP:261811**	1 unit	13.000
	X0.36 ... 0.60/ Y0.36 ... 0.60/ Z0.34 ... 1.25	X	**BD2A-400-ZR-X*/Y*/Z***	**BVP:261819**	1 unit	16.000
Left 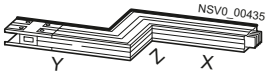	X0.36/ Y0.36/ Z0.34 ... 1.25	X	**BD2A-400-ZL-Z***	**BVP:261812**	1 unit	13.000
	X0.36 ... 0.60/ Y0.36 ... 0.60/ Z0.34 ... 1.25	X	**BD2A-400-ZL-X*/Y*/Z***	**BVP:261820**	1 unit	16.000

4

Optional lengths: For X* and Y* you must specify the required dimension in meters from the center of the joint block to the outside edge of the trunking unit, for Z* from the outside edge to the outside edge of the trunking unit (see also page 4/73)

Special colors available on request.

Fire barrier on the Z dimension as standard on request.

For information on DC application, see page 4/94.

* You can order this quantity or a multiple thereof.

With aluminum busbars

Version	Length/ Optional length	SD	**Rated current I_{nA} 630 A, 800 A, 1000 A**		PS*/ P. unit	Weight per unit approx.
		d	Type	Article No.		kg
Z-units (with joint block)						
(fitted to Y as standard)						
Rear 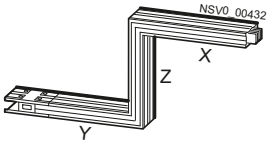	X0.36/ Y0.36/ Z0.26 ... 1.25	X	**BD2A-1000-ZH-Z***	**BVP:261818**	1 unit	26.000
	X0.36 ... 0.60/ Y0.36 ... 0.60/ Z0.26 ... 1.25	X	**BD2A-1000-ZH-X*/Y*/Z***	**BVP:261826**	1 unit	32.000
Front 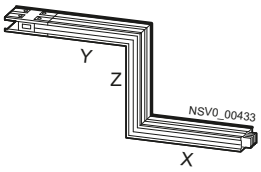	X0.36/ Y0.36/ Z0.26 ... 1.25	X	**BD2A-1000-ZV-Z***	**BVP:261817**	1 unit	26.000
	X0.36 ... 0.60/ Y0.36 ... 0.60/ Z0.26 ... 1.25	X	**BD2A-1000-ZV-X*/Y*/Z***	**BVP:261825**	1 unit	32.000
Right 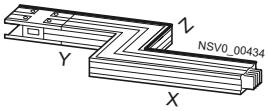	X0.36/ Y0.36/ Z0.34 ... 1.25	X	**BD2A-1000-ZR-Z***	**BVP:261815**	1 unit	26.000
	X0.36 ... 0.60/ Y0.36 ... 0.60/ Z0.34 ... 1.25	X	**BD2A-1000-ZR-X*/Y*/Z***	**BVP:261823**	1 unit	32.000
Left 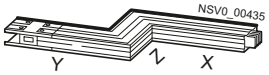	X0.36/ Y0.36/ Z0.34 ... 1.25	X	**BD2A-1000-ZL-Z***	**BVP:261816**	1 unit	26.000
	X0.36 ... 0.60/ Y0.36 ... 0.60/ Z0.34 ... 1.25	X	**BD2A-1000-ZL-X*/Y*/Z***	**BVP:261824**	1 unit	32.000

Optional lengths: For X* and Y* you must specify the required dimension in meters from the center of the joint block to the outside edge of the trunking unit, for Z* from the outside edge to the outside edge of the trunking unit (see also page 4/73)

Special colors available on request.

Fire barrier on the Z dimension as standard on request.

For information on DC application, see page 4/94.

*** You can order this quantity or a multiple thereof.**

Junction units

With aluminum busbars

Version	Length/ Optional length	SD	Rated current I_{nA} 160 A, 250 A, 400 A		PS*/ P. unit	Weight per unit approx.
		d	Type	Article No.		kg
L-units (with joint block), with configurable angle 85° ... 175°						
(fitted to Y as standard)						
Knee, rear 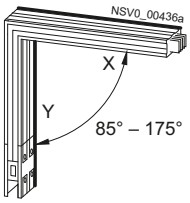	X0.36/ Y0.36	X	**BD2A-400-LH-G***	**BVP:261858**	1 unit	8.000
	X0.36 ... 1.25/ Y0.36	X	**BD2A-400-LH-X*-G***	**BVP:261859**	1 unit	18.000
	X0.36/ Y0.36 ... 1.25	X	**BD2A-400-LH-Y*-G***	**BVP:261860**	1 unit	18.000
	X0.36 ... 1.25/ Y0.36 ... 1.25	X	**BD2A-400-LH-X*/Y*-G***	**BVP:261861**	1 unit	28.000
Knee, front 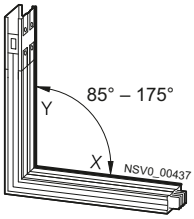	X0.36/ Y0.36	X	**BD2A-400-LV-G***	**BVP:261862**	1 unit	8.000
	X0.36 ... 1.25/ Y0.36	X	**BD2A-400-LV-X*-G***	**BVP:261863**	1 unit	18.000
	X0.36/ Y0.36 ... 1.25	X	**BD2A-400-LV-Y*-G***	**BVP:261864**	1 unit	18.000
	X0.36 ... 1.25/ Y0.36 ... 1.25	X	**BD2A-400-LV-X*/Y*-G***	**BVP:261865**	1 unit	28.000
Elbow, right 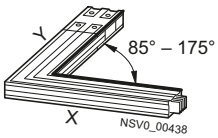	X0.36/ Y0.36	X	**BD2A-400-LR-G***	**BVP:261866**	1 unit	8.000
	X0.36 ... 1.25/ Y0.36	X	**BD2A-400-LR-X*-G***	**BVP:261867**	1 unit	18.000
	X0.36/ Y0.36 ... 1.25	X	**BD2A-400-LR-Y*-G***	**BVP:261868**	1 unit	18.000
	X0.36 ... 1.25/ Y0.36 ... 1.25	X	**BD2A-400-LR-X*/Y*-G***	**BVP:261869**	1 unit	28.000
Elbow, left 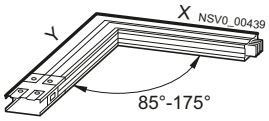	X0.36/ Y0.36	X	**BD2A-400-LL-G***	**BVP:261870**	1 unit	8.000
	X0.36 ... 1.25/ Y0.36	X	**BD2A-400-LL-X*-G***	**BVP:261871**	1 unit	18.000
	X0.36/ Y0.36 ... 1.25	X	**BD2A-400-LL-Y*-G***	**BVP:261872**	1 unit	18.000
	X0.36 ... 1.25/ Y0.36 ... 1.25	X	**BD2A-400-LL-X*/Y*-G***	**BVP:261873**	1 unit	28.000

Change of direction, knee and elbow: For G* you must specify the required number of degrees in 5° increments.

Optional lengths: For X* and Y* you must specify the required dimension in meters from the center of the joint block to the outside edge of the trunking unit (see also page 4/73).

Special colors available on request.

Version		Type suffix	Article No.	PS*/ P. unit	Weight per unit approx.
					kg
Fire barriers (optional)					
Fire barrier EI 90 in X dimension	X	**+BD2-S90-BX*-M***	**BVP:931956**	1 unit	1.000
Fire barrier EI 90 in Y dimension	X	**+BD2-S90-BY*-M***	**BVP:931957**	1 unit	1.000
Fire barrier EI 120 in X dimension	X	**+BD2-S120-BX*-M***	**BVP:931959**	1 unit	1.500
Fire barrier EI 120 in Y dimension	X	**+BD2-S120-BY*-M***	**BVP:931960**	1 unit	1.500

For BX* or BY you must specify the required dimension in meters from the center of the joint block (for BX*: end without joint block) to the center of the fire wall or fire ceiling, for -M* specify the wall or ceiling thickness.

For the configuration of the fire barrier, see page 4/87.

For approval in Germany:
BD2-S90(S120)-ZUL-D fire barrier approval kit
see page 4/62.

For information on DC application, see page 4/94.

* You can order this quantity or a multiple thereof.

With aluminum busbars

Version	Length/ Optional length	SD	Rated current I_{nA} 630 A, 800 A, 1000 A		PS*/ P. unit	Weight per unit approx.
		d	Type	Article No.		kg
L-units (with joint block), with configurable angle 85° ... 175°						
(fitted to Y as standard)						
Knee, rear 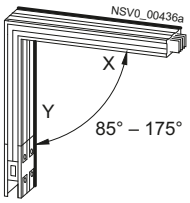	X0.36/ Y0.36	X	**BD2A-1000-LH-G***	**BVP:261830**	1 unit	17.000
	X0.36 ... 1.25/ Y0.36	X	**BD2A-1000-LH-X*-G***	**BVP:261831**	1 unit	38.000
	X0.36/ Y0.36 ... 1.25	X	**BD2A-1000-LH-Y*-G***	**BVP:261832**	1 unit	38.000
	X0.36 ... 1.25/ Y0.36 ... 1.25	X	**BD2A-1000-LH-X*/Y*-G***	**BVP:261833**	1 unit	59.000
Knee, front 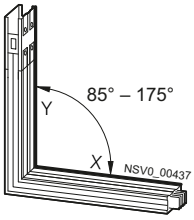	X0.36/ Y0.36	X	**BD2A-1000-LV-G***	**BVP:261834**	1 unit	17.000
	X0.36 ... 1.25/ Y0.36	X	**BD2A-1000-LV-X*-G***	**BVP:261835**	1 unit	38.000
	X0.36/ Y0.36 ... 1.25	X	**BD2A-1000-LV-Y*-G***	**BVP:261836**	1 unit	38.000
	X0.36 ... 1.25/ Y0.36 ... 1.25	X	**BD2A-1000-LV-X*/Y*-G***	**BVP:261837**	1 unit	59.000
Elbow, right 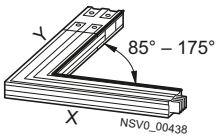	X0.36/ Y0.36	X	**BD2A-1000-LR-G***	**BVP:261838**	1 unit	17.000
	X0.36 ... 1.25/ Y0.36	X	**BD2A-1000-LR-X*-G***	**BVP:261839**	1 unit	38.000
	X0.36/ Y0.36 ... 1.25	X	**BD2A-1000-LR-Y*-G***	**BVP:261840**	1 unit	38.000
	X0.36 ... 1.25/ Y0.36 ... 1.25	X	**BD2A-1000-LR-X*/Y*-G***	**BVP:261841**	1 unit	59.000
Elbow, left 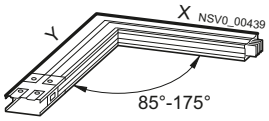	X0.36/ Y0.36	X	**BD2A-1000-LL-G***	**BVP:261842**	1 unit	17.000
	X0.36 ... 1.25/ Y0.36	X	**BD2A-1000-LL-X*-G***	**BVP:261843**	1 unit	38.000
	X0.36/ Y0.36 ... 1.25	X	**BD2A-1000-LL-Y*-G***	**BVP:261844**	1 unit	38.000
	X0.36 ... 1.25/ Y0.36 ... 1.25	X	**BD2A-1000-LL-X*/Y*-G***	**BVP:261845**	1 unit	59.000

Change of direction, knee and elbow: For G* you must specify the required number of degrees in 5° increments.

Optional lengths: For X* and Y* you must specify the required dimension in meters from the center of the joint block to the outside edge of the trunking unit (see also page 4/73).

Special colors available on request.

For information on DC application, see page 4/94.

*** You can order this quantity or a multiple thereof.**

Junction units

With aluminum busbars

Version	Length	SD	Rated current I_{nA} 160 A, 250 A, 400 A		PS*/ P. unit	Weight per unit approx.
		d	Type	Article No.		kg
Flexible junction units (with joint block)[1)]						
(fitted to Y as standard) 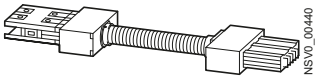	1.25	X	**BD2-400-R**	**BVP:045889**	1 unit	11.000
T-units (with joint block)						
Rear 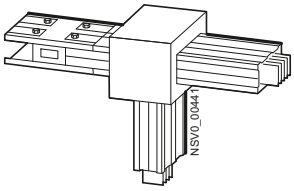	0.36	X	**BD2A-400-TH**	**BVP:261797**	1 unit	12.800
Front 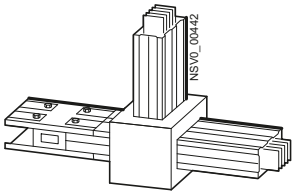	0.36	X	**BD2A-400-TV**	**BVP:261800**	1 unit	12.800
Right 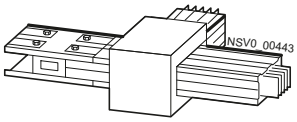	0.36	X	**BD2A-400-TR**	**BVP:261799**	1 unit	12.800
Left 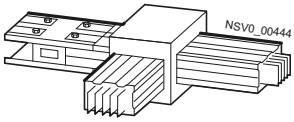	0.36	X	**BD2A-400-TL**	**BVP:261798**	1 unit	12.800

Special colors available on request.

1) Upgradable to max. IP54.

For information on DC application, see page 4/94.

* You can order this quantity or a multiple thereof.

With aluminum busbars

Version	Length	SD	Rated current I_{nA} 630 A, 800 A, 1000 A[1]		PS*/ P. unit	Weight per unit approx.
		d	Type	Article No.		kg
Flexible junction units (with joint block)[2]						
(fitted to Y as standard) 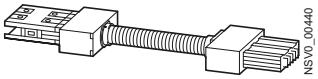	1.75 [1]	X	**BD2-800-R**	**BVP:045890**	1 unit	22.000
T-units (with joint block)						
Rear 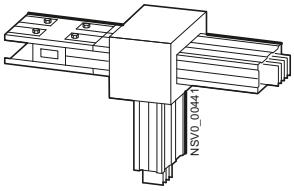	0.36	X	**BD2A-1000-TH**	**BVP:261807**	1 unit	25.000
Front 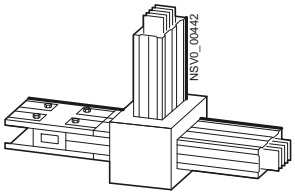	0.36	X	**BD2A-1000-TV**	**BVP:261810**	1 unit	25.000
Right 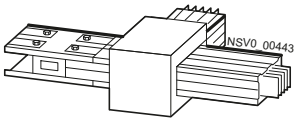	0.36	X	**BD2A-1000-TR**	**BVP:261809**	1 unit	25.000
Left 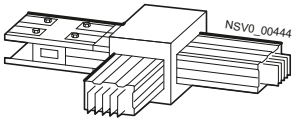	0.36	X	**BD2A-1000-TL**	**BVP:261808**	1 unit	25.000

Special colors available on request.

[1] BD2-800-R for use up to 800 A.

For information on DC application, see page 4/94.

Junction units

With copper busbars

Version	Length/ Optional length	SD	Rated current I_{nA} 160 A, 250 A, 400 A		PS*/ P. unit	Weight per unit approx.
		d	Type	Article No.		kg
L-units (with joint block)						
(fitted to Y as standard)						
Knee, rear 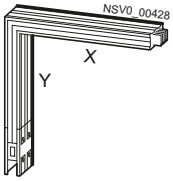	X0.36/ Y0.36	X	**BD2C-400-LH**	**BVP:261885**	1 unit	15.200
	X0.36 ... 1.25/ Y0.36	X	**BD2C-400-LH-X***	**BVP:261938**	1 unit	31.500
	X0.36/ Y0.36 ... 1.25	X	**BD2C-400-LH-Y***	**BVP:261939**	1 unit	31.500
	X0.36 ... 1.25/ Y0.36 ... 1.25	X	**BD2C-400-LH-X*/Y***	**BVP:261940**	1 unit	48.200
Knee, front 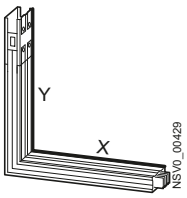	X0.36/ Y0.36	X	**BD2C-400-LV**	**BVP:261888**	1 unit	15.200
	X0.36 ... 1.25/ Y0.36	X	**BD2C-400-LV-X***	**BVP:261941**	1 unit	31.500
	X0.36/ Y0.36 ... 1.25	X	**BD2C-400-LV-Y***	**BVP:261942**	1 unit	31.500
	X0.36 ... 1.25/ Y0.36 ... 1.25	X	**BD2C-400-LV-X*/Y***	**BVP:261943**	1 unit	48.200
Elbow, right 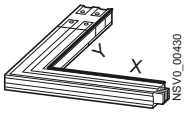	X0.36/ Y0.36	X	**BD2C-400-LR**	**BVP:261887**	1 unit	13.300
	X0.36 ... 1.25/ Y0.36	X	**BD2C-400-LR-X***	**BVP:261944**	1 unit	30.100
	X0.36/ Y0.36 ... 1.25	X	**BD2C-400-LR-Y***	**BVP:261945**	1 unit	30.100
	X0.36 ... 1.25/ Y0.36 ... 1.25	X	**BD2C-400-LR-X*/Y***	**BVP:261946**	1 unit	46.600
Elbow, left 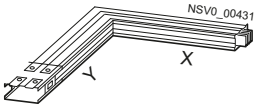	X0.36/ Y0.36	X	**BD2C-400-LL**	**BVP:261886**	1 unit	13.300
	X0.36 ... 1.25/ Y0.36	X	**BD2C-400-LL-X***	**BVP:261947**	1 unit	30.100
	X0.36/ Y0.36 ... 1.25	X	**BD2C-400-LL-Y***	**BVP:261948**	1 unit	30.100
	X0.36 ... 1.25/ Y0.36 ... 1.25	X	**BD2C-400-LL-X*/Y***	**BVP:261949**	1 unit	46.600

Optional lengths: For X* and Y* you must specify the required dimension in meters from the center of the joint block to the outside edge of the trunking unit (see also page 4/73).

Special colors available on request.

Version	SD	Type suffix	Article No.	PS*/ P. unit	Weight per unit approx.
	d				kg
Fire barrier for L-units (optional)					
Fire barrier S 120 in X dimension	X	**+BD2-S120-BX*-M***	**BVP:931959**	1 unit	1.500
Fire barrier S 120 in Y dimension	X	**+BD2-S120-BY*-M***	**BVP:931960**	1 unit	1.500

For BX* or BY you must specify the required dimension in meters from the center of the joint block (for BX*: end without joint block) to the center of the fire wall or fire ceiling, for -M* specify the wall or ceiling thickness.

For the configuration of the fire barrier, see page 4/87.

For approval in Germany:
BD2-S90(S120)-ZUL-D fire barrier approval kit
see page 4/62.

Fire barrier: Fire resistance class EI 90 and EI 120 according to EN 1366-3 and approval papers for European standard available soon.

For information on DC application, see page 4/94.

* You can order this quantity or a multiple thereof.

With copper busbars

Version	Length/ Optional length	SD	Rated current I_{nA} 630 A, 800 A, 1000 A, 1250 A		PS*/ P. unit	Weight per unit approx.
		d	Type	Article No.		kg
L-units (with joint block)						
(fitted to Y as standard)						
Knee, rear 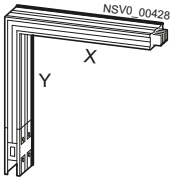	X0.36/ Y0.36	X	**BD2C-1250-LH**	**BVP:261895**	1 unit	31.900
	X0.36 ... 1.25/ Y0.36	X	**BD2C-1250-LH-X***	**BVP:261966**	1 unit	72.300
	X0.36/ Y0.36 ... 1.25	X	**BD2C-1250-LH-Y***	**BVP:261967**	1 unit	72.300
	X0.36 ... 1.25/ Y0.36 ... 1.25	X	**BD2C-1250-LH-X*/Y***	**BVP:261968**	1 unit	112.800
Knee, front 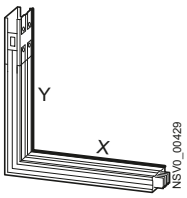	X0.36/ Y0.36	X	**BD2C-1250-LV**	**BVP:261898**	1 unit	31.900
	X0.36 ... 1.25/ Y0.36	X	**BD2C-1250-LV-X***	**BVP:261969**	1 unit	72.300
	X0.36/ Y0.36 ... 1.25	X	**BD2C-1250-LV-Y***	**BVP:261970**	1 unit	72.300
	X0.36 ... 1.25/ Y0.36 ... 1.25	X	**BD2C-1250-LV-X*/Y***	**BVP:261971**	1 unit	112.800
Elbow, right 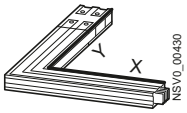	X0.36/ Y0.36	X	**BD2C-1250-LR**	**BVP:261897**	1 unit	29.500
	X0.36 ... 1.25/ Y0.36	X	**BD2C-1250-LR-X***	**BVP:261972**	1 unit	70.000
	X0.36/ Y0.36 ... 1.25	X	**BD2C-1250-LR-Y***	**BVP:261973**	1 unit	70.000
	X0.36 ... 1.25/ Y0.36 ... 1.25	X	**BD2C-1250-LR-X*/Y***	**BVP:261974**	1 unit	110.500
Elbow, left 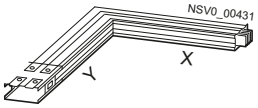	X0.36/ Y0.36	X	**BD2C-1250-LL**	**BVP:261896**	1 unit	29.500
	X0.36 ... 1.25/ Y0.36	X	**BD2C-1250-LL-X***	**BVP:261919**	1 unit	70.000
	X0.36/ Y0.36 ... 1.25	X	**BD2C-1250-LL-Y***	**BVP:261920**	1 unit	70.000
	X0.36 ... 1.25/ Y0.36 ... 1.25	X	**BD2C-1250-LL-X*/Y***	**BVP:261921**	1 unit	110.500

Optional lengths: For X* and Y* you must specify the required dimension in meters from the center of the joint block to the outside edge of the trunking unit (see also page 4/73).

Special colors available on request.

For information on DC application, see page 4/94.

*** You can order this quantity or a multiple thereof.**

Junction units

With copper busbars

Version	Length/ Optional length	SD	Rated current I_{nA} 160 A, 250 A, 400 A		PS*/ P. unit	Weight per unit approx.
		d	Type	Article No.		kg
Z-units (with joint block)						
(fitted to Y as standard)						
Rear 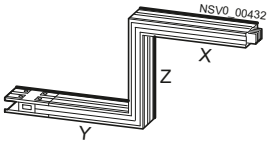	X0.36/ Y0.36/ Z0.14 ... 1.25	X	**BD2C-400-ZH-Z***	**BVP:261906**	1 unit	29.700
	X0.36 ... 0.60/ Y0.36 ... 0.60/ Z0.14 ... 1.25	X	**BD2C-400-ZH-X*/Y*/Z***	**BVP:261914**	1 unit	37.100
Front 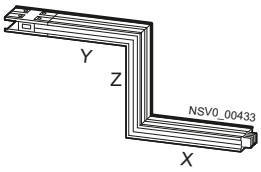	X0.36/ Y0.36/ Z0.14 ... 1.25	X	**BD2C-400-ZV-Z***	**BVP:261905**	1 unit	29.700
	X0.36 ... 0.60/ Y0.36 ... 0.60/ Z0.14 ... 1.25	X	**BD2C-400-ZV-X*/Y*/Z***	**BVP:261913**	1 unit	37.100
Right 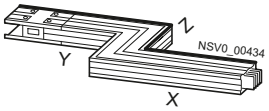	X0.36/ Y0.36/ Z0.34 ... 1.25	X	**BD2C-400-ZR-Z***	**BVP:261903**	1 unit	27.600
	X0.36 ... 0.60/ Y0.36 ... 0.60/ Z0.34 ... 1.25	X	**BD2C-400-ZR-X*/Y*/Z***	**BVP:261911**	1 unit	34.100
Left 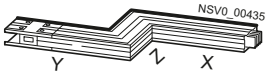	X0.36/ Y0.36/ Z0.34 ... 1.25	X	**BD2C-400-ZL-Z***	**BVP:261904**	1 unit	27.600
	X0.36 ... 0.60/ Y0.36 ... 0.60/ Z0.34 ... 1.25	X	**BD2C-400-ZL-X*/Y*/Z***	**BVP:261912**	1 unit	34.100

Optional lengths: For X* and Y* you must specify the required dimension in meters from the center of the joint block to the outside edge of the trunking unit, for Z* from the outside edge to the outside edge of the trunking unit (see also page 4/73)

Special colors available on request.

Fire barrier on the Z dimension as standard on request.

For information on DC application, see page 4/94.

* You can order this quantity or a multiple thereof.

With copper busbars

Version	Length/ Optional length	SD	Rated current I_{nA} 630 A, 800 A, 1000 A, 1250 A		PS*/ P. unit	Weight per unit approx.
		d	Type	Article No.		kg
Z-units (with joint block)						
(fitted to Y as standard)						
Rear 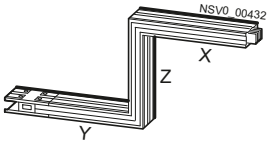	X0.36/ Y0.36/ Z0.26 ... 1.25	X	**BD2C-1250-ZH-Z***	**BVP:261910**	1 unit	67.800
	X0.36 ... 0.60/ Y0.36 ... 0.60/ Z0.26 ... 1.25	X	**BD2C-1250-ZH-X*/Y*/Z***	**BVP:261918**	1 unit	83.500
Front 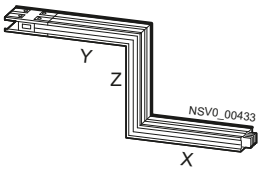	X0.36/ Y0.36/ Z0.26 ... 1.25	X	**BD2C-1250-ZV-Z***	**BVP:261909**	1 unit	67.800
	X0.36 ... 0.60/ Y0.36 ... 0.60/ Z0.26 ... 1.25	X	**BD2C-1250-ZV-X*/Y*/Z***	**BVP:261917**	1 unit	83.500
Right 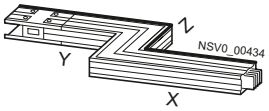	X0.36/ Y0.36/ Z0.34 ... 1.25	X	**BD2C-1250-ZR-Z***	**BVP:261907**	1 unit	64.300
	X0.36 ... 0.60/ Y0.36 ... 0.60/ Z0.34 ... 1.25	X	**BD2C-1250-ZR-X*/Y*/Z***	**BVP:261915**	1 unit	78.600
Left 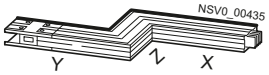	X0.36/ Y0.36/ Z0.34 ... 1.25	X	**BD2C-1250-ZL-Z***	**BVP:261908**	1 unit	64.300
	X0.36 ... 0.60/ Y0.36 ... 0.60/ Z0.34 ... 1.25	X	**BD2C-1250-ZL-X*/Y*/Z***	**BVP:261916**	1 unit	78.600

Optional lengths: For X* and Y* you must specify the required dimension in meters from the center of the joint block to the outside edge of the trunking unit, for Z* from the outside edge to the outside edge of the trunking unit (see also page 4/73)

Special colors available on request.

Fire barrier on the Z dimension as standard on request.

For information on DC application, see page 4/94.

*** You can order this quantity or a multiple thereof.**

Junction units

With copper busbars

Version	Length/ Optional length	SD	Rated current I_{nA} 160 A, 250 A, 400 A		PS*/ P. unit	Weight per unit approx.
		d	Type	Article No.		kg
L-units (with joint block), with configurable angle 85° ... 175°						
(fitted to Y as standard)						
Knee, rear 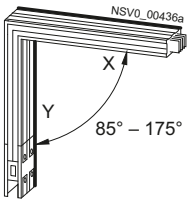	X0.36/ Y0.36	X	**BD2C-400-LH-G***	**BVP:261950**	1 unit	14.700
	X0.36 ... 1.25/ Y0.36	X	**BD2C-400-LH-X*-G***	**BVP:261951**	1 unit	31.500
	X0.36/ Y0.36 ... 1.25	X	**BD2C-400-LH-Y*-G***	**BVP:261952**	1 unit	31.500
	X0.36 ... 1.25/ Y0.36 ... 1.25	X	**BD2C-400-LH-X*/Y*-G***	**BVP:261953**	1 unit	48.200
Knee, front 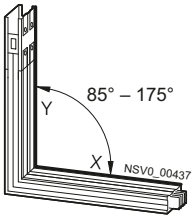	X0.36/ Y0.36	X	**BD2C-400-LV-G***	**BVP:261954**	1 unit	14.700
	X0.36 ... 1.25/ Y0.36	X	**BD2C-400-LV-X*-G***	**BVP:261955**	1 unit	31.500
	X0.36/ Y0.36 ... 1.25	X	**BD2C-400-LV-Y*-G***	**BVP:261956**	1 unit	31.500
	X0.36 ... 1.25/ Y0.36 ... 1.25	X	**BD2C-400-LV-X*/Y*-G***	**BVP:261957**	1 unit	48.200
Elbow, right 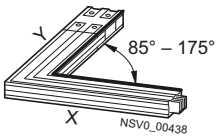	X0.36/ Y0.36	X	**BD2C-400-LR-G***	**BVP:261958**	1 unit	13.300
	X0.36 ... 1.25/ Y0.36	X	**BD2C-400-LR-X*-G***	**BVP:261959**	1 unit	30.100
	X0.36/ Y0.36 ... 1.25	X	**BD2C-400-LR-Y*-G***	**BVP:261960**	1 unit	30.100
	X0.36 ... 1.25/ Y0.36 ... 1.25	X	**BD2C-400-LR-X*/Y*-G***	**BVP:261961**	1 unit	46.600
Elbow, left 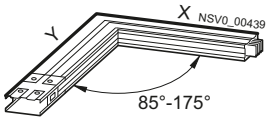	X0.36/ Y0.36	X	**BD2C-400-LL-G***	**BVP:261962**	1 unit	13.300
	X0.36 ... 1.25/ Y0.36	X	**BD2C-400-LL-X*-G***	**BVP:261963**	1 unit	30.100
	X0.36/ Y0.36 ... 1.25	X	**BD2C-400-LL-Y*-G***	**BVP:261964**	1 unit	30.100
	X0.36 ... 1.25/ Y0.36 ... 1.25	X	**BD2C-400-LL-X*/Y*-G***	**BVP:261965**	1 unit	46.600

Change of direction, knee and elbow: For G* you must specify the required number of degrees in 5° increments.

Optional lengths: For X* and Y* you must specify the required dimension in meters from the center of the joint block to the outside edge of the trunking unit (see also page 4/73).

Special colors available on request.

Version	SD	Type suffix	Article No.	PS*/ P. unit	Weight per unit approx.
	d				kg
Fire barrier for L-units (optional)					
Fire barrier EI 120 in X dimension	X	**+BD2-S120-BX*-M***	**BVP:931959**	1 unit	1.500
Fire barrier EI 120 in Y dimension	X	**+BD2-S120-BY*-M***	**BVP:931960**	1 unit	1.500

For BX* or BY you must specify the required dimension in meters from the center of the joint block (for BX*: end without joint block) to the center of the fire wall or fire ceiling, for -M* specify the wall or ceiling thickness.

For the configuration of the fire barrier, see page 4/87.

For approval in Germany:
BD2-S90(S120)-ZUL-D fire barrier approval kit
see page 4/62.

Fire barrier: Fire resistance class EI 90 and EI 120 according to EN 1366-3 and approval papers for European standard available soon.

For information on DC application, see page 4/94.

* You can order this quantity or a multiple thereof.

With copper busbars

Version	Length/ Optional length	SD	Rated current I_{nA} 630 A, 800 A, 1000 A, 1250 A		PS*/ P. unit	Weight per unit approx.
		d	Type	Article No.		kg
L-units (with joint block), with configurable angle 85° ... 175°						
(fitted to Y as standard)						
Knee, rear 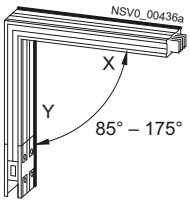	X0.36/ Y0.36	X	**BD2C-1250-LH-G***	**BVP:261922**	1 unit	31.900
	X0.36 ... 1.25/ Y0.36	X	**BD2C-1250-LH-X*-G***	**BVP:261923**	1 unit	72.300
	X0.36/ Y0.36 ... 1.25	X	**BD2C-1250-LH-Y*-G***	**BVP:261924**	1 unit	72.300
	X0.36 ... 1.25/ Y0.36 ... 1.25	X	**BD2C-1250-LH-X*/Y*-G***	**BVP:261925**	1 unit	112.800
Knee, front 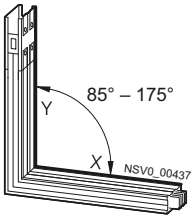	X0.36/ Y0.36	X	**BD2C-1250-LV-G***	**BVP:261926**	1 unit	31.900
	X0.36 ... 1.25/ Y0.36	X	**BD2C-1250-LV-X*-G***	**BVP:261927**	1 unit	72.300
	X0.36/ Y0.36 ... 1.25	X	**BD2C-1250-LV-Y*-G***	**BVP:261928**	1 unit	72.300
	X0.36 ... 1.25/ Y0.36 ... 1.25	X	**BD2C-1250-LV-X*/Y*-G***	**BVP:261929**	1 unit	112.800
Elbow, right 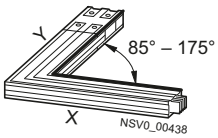	X0.36/ Y0.36	X	**BD2C-1250-LR-G***	**BVP:261930**	1 unit	29.500
	X0.36 ... 1.25/ Y0.36	X	**BD2C-1250-LR-X*-G***	**BVP:261931**	1 unit	70.000
	X0.36/ Y0.36 ... 1.25	X	**BD2C-1250-LR-Y*-G***	**BVP:261932**	1 unit	70.000
	X0.36 ... 1.25/ Y0.36 ... 1.25	X	**BD2C-1250-LR-X*/Y*-G***	**BVP:261933**	1 unit	110.500
Elbow, left 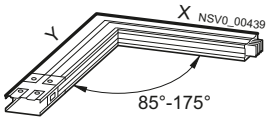	X0.36/ Y0.36	X	**BD2C-1250-LL-G***	**BVP:261934**	1 unit	29.500
	X0.36 ... 1.25/ Y0.36	X	**BD2C-1250-LL-X*-G***	**BVP:261935**	1 unit	70.000
	X0.36/ Y0.36 ... 1.25	X	**BD2C-1250-LL-Y*-G***	**BVP:261936**	1 unit	70.000
	X0.36 ... 1.25/ Y0.36 ... 1.25	X	**BD2C-1250-LL-X*/Y*-G***	**BVP:261937**	1 unit	110.500

Change of direction, knee and elbow: For G* you must specify the required number of degrees in 5° increments.

Optional lengths: For X* and Y* you must specify the required dimension in meters from the center of the joint block to the outside edge of the trunking unit (see also page 4/73).

Special colors available on request.

For information on DC application, see page 4/94.

*** You can order this quantity or a multiple thereof.**

Junction units

With copper busbars

Version	Length	SD	Rated current I_{nA} 160 A, 250 A, 400 A		PS*/ P. unit	Weight per unit approx.
		d	Type	Article No.		kg
Flexible junction units (with joint block)[1)]						
(fitted to Y as standard) 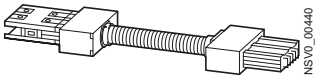	1.25	X	**BD2-400-R**	**BVP:045889**	1 unit	11.000
T-units (with joint block)						
Rear 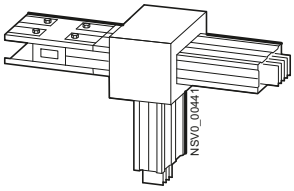	0.36	X	**BD2C-400-TH**	**BVP:261889**	1 unit	21.900
Front 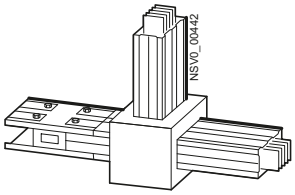	0.36	X	**BD2C-400-TV**	**BVP:261892**	1 unit	21.900
Right 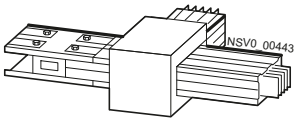	0.36	X	**BD2C-400-TR**	**BVP:261891**	1 unit	16.700
Left 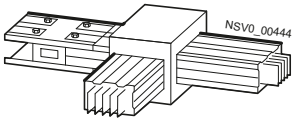	0.36	X	**BD2C-400-TL**	**BVP:261890**	1 unit	16.700

Special colors available on request.

For information on DC application, see page 4/94.

* You can order this quantity or a multiple thereof.

With copper busbars

Version	Length	SD	Rated current I_{nA} 630 A, 800 A, 1000 A, 1250 A		PS*/ P. unit	Weight per unit approx.
		d	Type	Article No.		kg
Flexible junction unit (with joint block)						
(fitted to Y as standard) 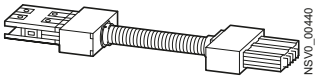	1.75	X	**BD2-800-R**	**BVP:045890**	1 unit	22.000
T-units (with joint block)						
Rear 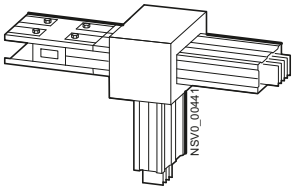	0.36	X	**BD2C-1250-TH**	**BVP:261899**	1 unit	49.300
Front 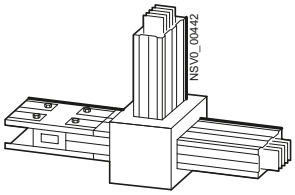	0.36	X	**BD2C-1250-TV**	**BVP:261902**	1 unit	49.300

For information on DC application, see page 4/94.

*** You can order this quantity or a multiple thereof.**

Selection and ordering data

Version	SD	Rated current I_{nA} 160 A, 250 A		PS*/ P. unit	Weight per unit approx.	SD	Rated current I_{nA} 160 A, 250 A, 400 A		PS*/ P. unit	Weight per unit approx.
	d	Type	Article No.		kg	d	Type	Article No.		kg
Feeding units										
End feeding units without joint block Bolt terminal (bolt included as standard); PE position can be changed Cable entry for multi-core cables from the front 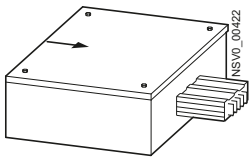										
• Aluminum	X	**BD2A-250-EE**	**BVP:261993**	1 unit	6.600	X	**BD2A-400-EE**	**BVP:261995**	1 unit	13.300
• Copper	X	**BD2C-250-EE**	**BVP:262001**	1 unit	8.900	X	**BD2C-400-EE**	**BVP:262003**	1 unit	16.300
With cable entry plate[1)] Cable entry for single-core cables from the front 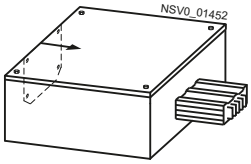										
• Aluminum	X	**BD2A-250-EE-EBAL**	**BVP:611093**	1 unit	6.600	X	**BD2A-400-EE-EBAL**	**BVP:611097**	1 unit	13.300
• Copper	X	**BD2C-250-EE-EBAL**	**BVP:611094**	1 unit	8.900	X	**BD2C-400-EE-EBAL**	**BVP:611098**	1 unit	16.300
With cabling box Cable entry for multi-core cables from 2 sides 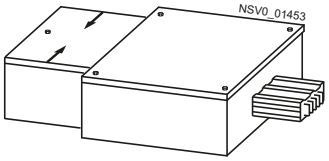										
• Aluminum		--				X	**BD2A-400-EE-KR**	**BVP:611095**	1 unit	16.500
• Copper		--				X	**BD2C-400-EE-KR**	**BVP:611096**	1 unit	19.500
With cabling box and cable entry plate[1)] Cable entry for single-core cables from 2 sides 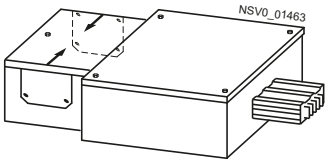										
• Aluminum		--				X	**BD2A-400-EE-KR-EBAL**	**BVP:611099**	1 unit	16.500
• Copper		--				X	**BD2C-400-EE-KR-EBAL**	**BVP:611100**	1 unit	19.500

Accessories for cable entry, see page 4/62.

1) Single-core cable entry plate, undrilled.

For information on DC application, see page 4/94.

* You can order this quantity or a multiple thereof.

Version	SD	Rated current I_{nA} 630 A, 800 A, 1000 A		PS*/ P. unit	Weight per unit approx.	SD	Rated current I_{nA} 1250 A		PS*/ P. unit	Weight per unit approx.
	d	Type	Article No.		kg	d	Type	Article No.		kg
Feeding units										
End feeding units without joint block										
Bolt terminal (bolt included as standard); PE position can be changed										
Cable entry for multi-core cables from the front										
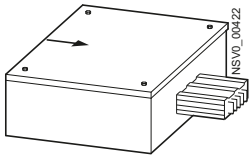										
• Aluminum	X	**BD2A-1000-EE**	**BVP:261998**	1 unit	14.900		**--**			
• Copper	X	**BD2C-1000-EE**	**BVP:262006**	1 unit	22.100	X	**BD2C-1250-EE**	**BVP:262009**	1 unit	27.100
With cable entry plate[1]										
Cable entry for single-core cables from the front										
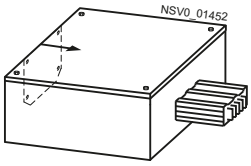										
• Aluminum	X	**BD2A-1000-EE-EBAL**	**BVP:611103**	1 unit	14.900		**--**			
• Copper	X	**BD2C-1000-EE-EBAL**	**BVP:611104**	1 unit	22.100	X	**BD2C-1250-EE-EBAL**	**BVP:611108**	1 unit	27.100
With cabling box										
Cable entry for multi-core cables from 2 sides										
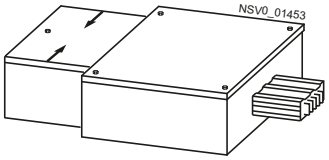										
• Aluminum	X	**BD2A-1000-EE-KR**	**BVP:611101**	1 unit	19.900		**--**			
• Copper	X	**BD2C-1000-EE-KR**	**BVP:611102**	1 unit	27.100	X	**BD2C-1250-EE-KR**	**BVP:611107**	1 unit	32.100
With cabling box and cable entry plate[1]										
Cable entry for single-core cables from 2 sides										
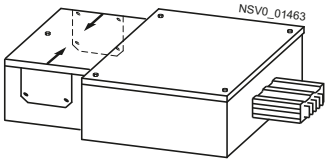										
• Aluminum	X	**BD2A-1000-EE-KR-EBAL**	**BVP:611105**	1 unit	19.900		**--**			
• Copper	X	**BD2C-1000-EE-KR-EBAL**	**BVP:611106**	1 unit	27.100	X	**BD2C-1250-EE-KR-EBAL**	**BVP:611109**	1 unit	32.100

Accessories for cable entry, see page 4/62.

[1] Single-core cable entry plate, undrilled.

For information on DC application, see page 4/94.

* You can order this quantity or a multiple thereof.

Feeding units

Version	SD	Rated current I_{nA} 160 A, 250 A		PS*/ P. unit	Weight per unit approx.	SD	Rated current I_{nA} 160 A, 250 A, 400 A		PS*/ P. unit	Weight per unit approx.
	d	Type	Article No.		kg	d	Type	Article No.		kg
Feeding units										
End feeding units with 3-pole switch disconnector and with cable entry plate[1]										
Cable entry for single-core cables from 3 sides										
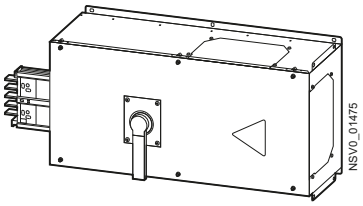										
• Copper	X	**BD2C-250-EESC**	**BVP:611343**	1 unit	16.300	X	**BD2C-315-EESC**	**BVP:611344**	1 unit	28.000
• Copper		--				X	**BD2C-400-EESC**	**BVP:611345**	1 unit	33.000
Distribution board feeding units without joint block										
Bolt terminal (bolt included in scope of supply); PE position can be changed										
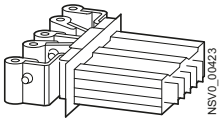										
• Aluminum	X	**BD2A-250-VE**	**BVP:261994**	1 unit	2.100	X	**BD2A-400-VE**	**BVP:261996**	1 unit	3.500
• Copper	X	**BD2C-250-VE**	**BVP:262002**	1 unit	4.400	X	**BD2C-400-VE**	**BVP:262004**	1 unit	6.500
Center feeding units without joint block										
Bolt terminal (bolt included in scope of supply); edgewise, flat and PE positions can be changed (by rotating the whole busbar piece)										
Cable entry for multi-core cables from 3 sides										
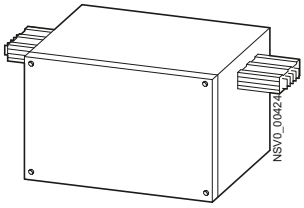										
• Aluminum		--				X	**BD2A-400-ME**	**BVP:261997**	1 unit	28.000
• Copper		--				X	**BD2C-400-ME**	**BVP:262005**	1 unit	36.600
With cable entry plate[1]										
Cable entry for single-core cables from 3 sides										
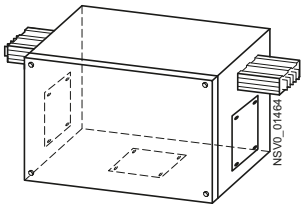										
• Aluminum		--				X	**BD2A-400-ME-MBAL**	**BVP:611110**	1 unit	28.000
• Copper		--				X	**BD2C-400-ME-MBAL**	**BVP:611111**	1 unit	36.600

Accessories for cable entry, see page 4/62.

[1] Single-core cable entry plate, undrilled.

For information on DC application, see page 4/94.

* You can order this quantity or a multiple thereof.

Version	SD	Rated current I_{nA} 630 A, 800 A, 1000 A		PS*/ P. unit	Weight per unit approx.	SD	Rated current I_{nA} 1250 A		PS*/ P. unit	Weight per unit approx.
	d	Type	Article No.		kg	d	Type	Article No.		kg
Feeding units										
End feeding units with 3-pole switch disconnector and with cable entry plate[1]										
Cable entry for single-core cables from 3 sides										
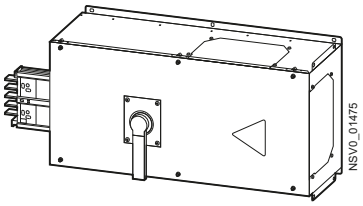										
• Copper	X	**BD2C-630-EESC**	**BVP:611346**	1 unit	39.000		--			
• Copper	X	**BD2C-800-EESC**	**BVP:611347**	1 unit	39.000		--			
Distribution board feeding units without joint block										
Bolt terminal (bolt included in scope of supply); PE position can be changed										
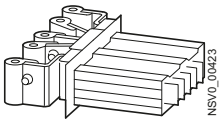										
• Aluminum	X	**BD2A-1000-VE**	**BVP:261999**	1 unit	4.700		--			
• Copper	X	**BD2C-1000-VE**	**BVP:262007**	1 unit	8.800	X	**BD2C-1250-VE**	**BVP:262010**	1 unit	16.300
Center feeding units without joint block										
Bolt terminal (bolt included in scope of supply); edgewise, flat and PE positions can be changed (by rotating the whole busbar piece)										
Cable entry for multi-core cables from 3 sides										
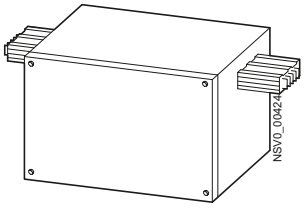										
• Aluminum	X	**BD2A-1000-ME**	**BVP:262000**	1 unit	47.000		--			
• Copper	X	**BD2C-1000-ME**	**BVP:262008**	1 unit	75.500		--			
With cable entry plate[1]										
Cable entry for single-core cables from 3 sides										
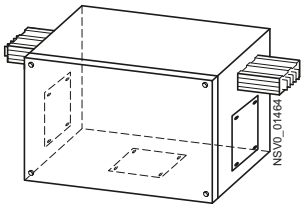										
• Aluminum	X	**BD2A-1000-ME-MBAL**	**BVP:611112**	1 unit	47.000		--			
• Copper	X	**BD2C-1000-ME-MBAL**	**BVP:611113**	1 unit	75.500		--			

Accessories for cable entry, see page 4/62.

[1] Single-core cable entry plate, undrilled.

For information on DC application, see page 4/94.

Selection and ordering data

Version	Fuse bases	Rated current I_{nC}	Rated operational voltage U_e	SD	Type	Article No.	PS*/ P. unit	Weight per unit approx.
		A	V	d				kg
Molded-plastic enclosures, size 1, up to 25 A								
With fuse base								
• Without socket outlet	3 × D02	25	400	X	**BD2-AK1/S18**	**BVP:047112**	1 unit	1.150
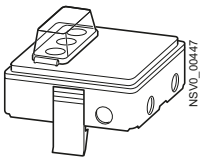	3 × D01	16	400	X	**BD2-AK1/S14**	**BVP:047113**	1 unit	1.100
• With 2 CEE socket outlets, 3-pole, 16 A	2 × D01	16	230	X	**BD2-AK1/ 2CEE163S14**	**BVP:047167**	1 unit	1.200
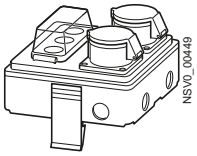								
• With 1 CEE socket outlet, 5-pole, 16 A	3 × D01	16	400	X	**BD2-AK1/ CEE165S14**	**BVP:047230**	1 unit	1.200
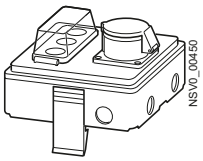								
• with 3 Schuko socket outlets 16 A	3 × D01	16	230	X	**BD2-AK1/ 3SD163S14**	**BVP:047284**	1 unit	1.400
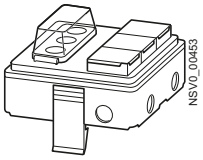								

M25 cable grommet included in scope of supply.

Screw adapters, fuse links and screw caps are not included in scope of supply.

Use plastic cable glands with strain relief (not included in scope of supply).

* You can order this quantity or a multiple thereof.

Version	Miniature circuit breakers (MCBs)	Rated current I_{nC}	Rated operational voltage U_e	SD	Type	Article No.	PS*/ P. unit	Weight per unit approx.
		A	V	d				kg
Molded-plastic enclosures, size 1, up to 25 A								
With miniature circuit breaker								
• Without socket outlet 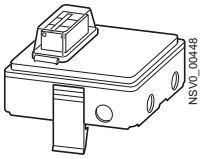	3-pole, 16 A, characteristic C	16	400	X	**BD2-AK1/A163**	**BVP:047146**	1 unit	1.400
• With 2 CEE socket outlets, 3-pole, 16 A 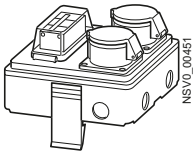	2 × 1-pole, 16 A, characteristic B	16	230	X	**BD2-AK1/ 2CEE163A161**	**BVP:047231**	1 unit	1.400
• With 1 CEE socket outlet, 5-pole, 16 A 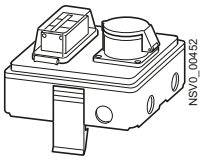	3-pole, 16 A, characteristic C	16	400	X	**BD2-AK1/ CEE165A163**	**BVP:047283**	1 unit	1.500
• with 3 Schuko socket outlets 16 A 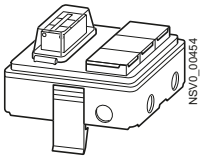	3 × 1-pole, 16 A, characteristic B	16	230	X	**BD2-AK1/ 3SD163A161**	**BVP:047335**	1 unit	1.300
• With 1 CEE socket outlet, 3-pole, 16 A 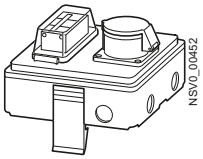	1-pole, 16 A, characteristic C Residual current operated circuit breaker 2-pole, 25 A/30 mA	16	230	X	**BD2-AK1/ CEE163-FIA161**	**BVP:660869**	1 unit	1.500
• with 2 Schuko socket outlets 16 A 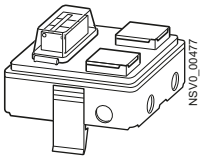	1-pole, 16 A, characteristic B Residual current operated circuit breaker 2-pole, 25 A/30 mA	16	230	X	**BD2-AK1/ 2SD163-FIA161**	**BVP:660870**	1 unit	1.300
For free arrangement of components (P_V max. 13 W)								
• Without socket outlet, with integrated DIN rail 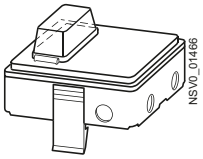	Mounting space for 4 modular widths (MW)	25	400	X	**BD2-AK1/F**	**BVP:203247**	1 unit	0.700

M25 cable grommet included in scope of supply.

Use plastic cable glands with strain relief (not included in scope of supply).

4

*** You can order this quantity or a multiple thereof.**

Tap-off units

Version	Fuse base/miniature circuit breaker	Rated current I_{nC}	Rated operational voltage U_e	SD	Type	Article No.	PS*/ P. unit	Weight per unit approx.
		A	V	d				kg
Sheet-steel enclosures, size 02, up to 63 A								
With fuse base								
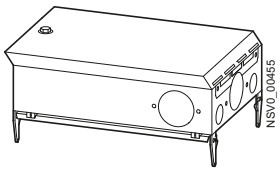	3-pole fuse base D02	63	400	X	**BD2-AK02X/S18**	**BVP:262438**	1 unit	4.140
	3-pole fuse base S27, with screw adapter system	25	500	X	**BD2-AK02X/S27**	**BVP:262439**	1 unit	3.940
	3-pole fuse base S33, with screw adapter system	63	500	X	**BD2-AK02X/S33**	**BVP:262450**	1 unit	4.200
	3-pole fuse base SP38 for cylinder fuses 10 mm × 38 mm	25	400	X	**BD2-AK02X/ F1038-3**	**BVP:262469**	1 unit	5.500
	4-pole fuse base SP38 for cylinder fuses 10 mm × 38 mm	25	400	X	**BD2-AK02X/ F1038-3N**	**BVP:262470**	1 unit	5.500
	3-pole fuse base SP51 for cylinder fuses 14 mm × 51 mm	32	400	X	**BD2-AK02X/ F1451-3**	**BVP:262471**	1 unit	5.500
	4-pole fuse base SP51 for cylinder fuses 14 mm × 51 mm	32	400	X	**BD2-AK02X/ F1451-3N**	**BVP:262472**	1 unit	5.500
	3-pole fuse base SP58 for cylinder fuses 22 mm × 58 mm	63	400	X	**BD2-AK02X/ F2258-3**	**BVP:262473**	1 unit	5.700
	4-pole fuse base SP58 for cylinder fuses 22 mm × 58 mm	63	400	X	**BD2-AK02X/ F2258-3N**	**BVP:262474**	1 unit	5.700
With miniature circuit breaker								
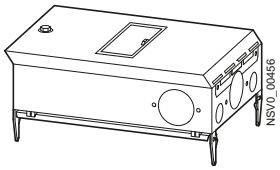	3-pole, 32 A, characteristic C	32	400	X	**BD2-AK02M2/A323**	**BVP:262451**	1 unit	4.380
	3-pole + N, 32 A, characteristic C	32	400	X	**BD2-AK02M2/A323N**	**BVP:262452**	1 unit	4.800
	3-pole, 63 A, characteristic C	63	400	X	**BD2-AK02M2/A633**	**BVP:262453**	1 unit	5.100
	3-pole + N, 63 A, characteristic C	63	400	X	**BD2-AK02M2/A633N**	**BVP:262454**	1 unit	5.200
For free arrangement of components (P_V max. 22.5 W)								
• With integrated DIN rail 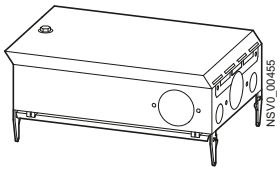	Mounting space for 9 modular widths (MW)	63	690	X	**BD2-AK02X/F**	**BVP:262457**	1 unit	3.800
• With component mounting unit, 9 MW 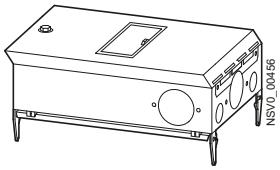	Mounting space for 9 modular widths (MW)	63	690	X	**BD2-AK02M2/F**	**BVP:262458**	1 unit	3.900

Special colors available on request.

Screw adapters, fuse links and screw caps are not included in scope of supply.

Use plastic cable glands with strain relief (not included in scope of supply).

* You can order this quantity or a multiple thereof.

Version	Fuse bases	Rated current I_{nC}	Rated operational voltage U_e	SD	Type	Article No.	PS*/ P. unit	Weight per unit approx.
		A	V	d				kg
Sheet-steel enclosures, size 2, up to 63 A, with cover-integrated switch disconnector								
With fuse base								
• Without socket outlet 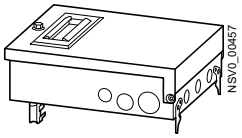	3-pole fuse base D02	63	400	X	**BD2-AK2X/S18**	**BVP:203135**	1 unit	4.140
	3-pole fuse base S27, with screw adapter system	25	500	X	**BD2-AK2X/S27**	**BVP:203136**	1 unit	3.940
	3-pole fuse base S33, with screw adapter system	63	500	X	**BD2-AK2X/S33**	**BVP:203138**	1 unit	4.200
• With 1 CEE socket outlet, 5-pole, 32 A 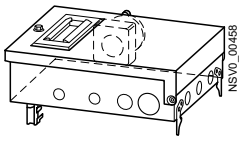	3-pole fuse base S33, with screw adapter system	32	400	X	**BD2-AK2X/ CEE325S33**	**BVP:203142**	1 unit	5.100
• with 1 CEE socket outlet, 5-pole, 63 A 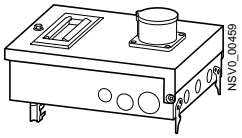	3-pole fuse base S33, with screw adapter system	63	400	X	**BD2-AK2X/ CEE635S33**	**BVP:203146**	1 unit	5.680
With 2 CEE socket outlets, 5-pole, 16 A 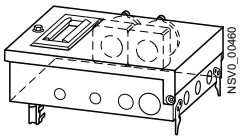	2 × 3-pole fuse base D01	16	400	X	**BD2-AK2X/ 2CEE165S14**	**BVP:203148**	1 unit	4.800
	2 × 3-pole fuse base S27, with screw adapter system	16	400	X	**BD2-AK2X/ 2CEE165S27/FORMP**	**BVP:203149**	1 unit	4.900
For free arrangement of components (P_V max. 22.5 W)								
• Without socket outlet, with integrated DIN rail 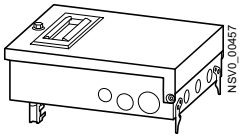	Mounting space for 9 modular widths (MW)	63	690	X	**BD2-AK2X/F**	**BVP:203251**	1 unit	3.800

Special colors available on request.

Screw adapters, fuse links and screw caps are not included in scope of supply.

Use plastic cable glands with strain relief (not included in scope of supply).

*** You can order this quantity or a multiple thereof.**

Tap-off units

Version	Miniature circuit breaker / fuse base / fuse switch disconnector	Rated current I_{nC}	Rated operational voltage U_e	SD	Type	Article No.	PS*/ P. unit	Weight per unit approx.
		A	V	d				kg
Sheet-steel enclosures, size 2, up to 63 A, with cover-integrated switch disconnector								
With miniature circuit breaker								
• Without socket outlet 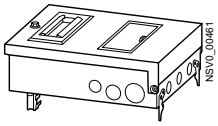	3-pole, 32 A, characteristic C	32	400	X	**BD2-AK2M2/A323**	**BVP:203144**	1 unit	4.380
• With 1 CEE socket outlet, 5-pole, 16 A 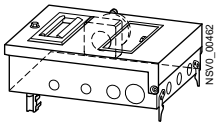	3-pole, 16 A, characteristic C Residual current operated circuit breaker 4-pole, 25 A/30 mA	16	400	X	**BD2-AK2M2/ CEE165FIA163**	**BVP:660868**	1 unit	6.100
• With 1 CEE socket outlet, 5-pole, 32 A 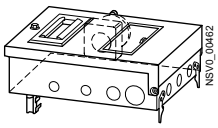	3-pole, 32 A, characteristic C	32	400	X	**BD2-AK2M2/ CEE325A323**	**BVP:207986**	1 unit	4.900
• With 1 CEE socket outlet, 5-pole, 16 A and 2 Schuko socket outlets 16 A 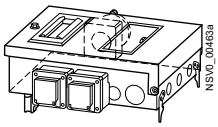	3-pole, 16 A, characteristic B and 2 × 1-pole, 16 A, characteristic B	16	230	X	**BD2-AK2M2/ 2SD163CEE165A163**	**BVP:203150**	1 unit	5.600
• With 2 CEE socket outlets, 5-pole, 16 A 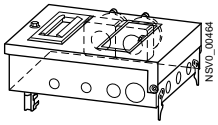	2 × 3-pole, 16 A, characteristic C	16	400	X	**BD2-AK2M2/ 2CEE165A163**	**BVP:203151**	1 unit	5.400
For free arrangement of components (P_V max. 22.5 W)								
• Without socket outlet, with device installation unit 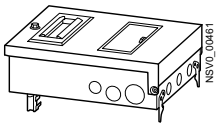	Mounting space for 9 modular widths (MW)	63	690	X	**BD2-AK2M2/F**	**BVP:203252**	1 unit	3.900
Sheet-steel enclosures, size 3, up to 125 A, with cover-integrated switch disconnector								
With fuse base 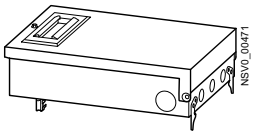	Low-voltage LV HRC fuse base, size 00; bolt terminal	125	690	X	**BD2-AK3X/GS00**	**BVP:203162**	1 unit	5.400
With fuse switch disconnector 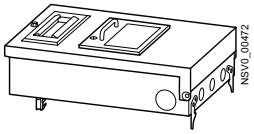	LV HRC fuse switch disconnector, size 00; bolt terminal	125	690	X	**BD2-AK3X/GSTZ00**	**BVP:203163**	1 unit	6.960
For free arrangement of components (P_V max. 40 W)								
• Without socket outlet, with 2 device installation units 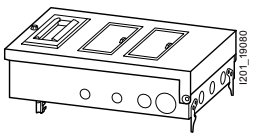	Mounting space for 2 x 9 modular widths (MW)	125	690	X	**BD2-AK3M2/F**	**BVP:660926**	1 unit	5.140

Special colors available on request.

* You can order this quantity or a multiple thereof.

Use plastic cable glands with strain relief (not included in scope of supply).

Version	Protection equipment	Rated current I_{nC}	Rated operational voltage U_e	SD	Type	Article No.	PS*/ P. unit	Weight per unit approx.
		A	V	d				kg
Sheet-steel enclosures, size 03, up to 125 A								
With fuse base 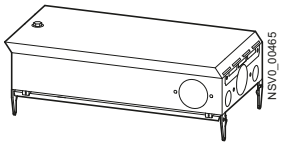	Bolt terminal							
	3-pole fuse base SP58 for cylinder fuses 22 mm × 58 mm	100	690	X	**BD2-AK03X/ F2258-3**	**BVP:262497**	1 unit	7.500
	4-pole fuse base SP58 for cylinder fuses 22 mm × 58 mm	100	690	X	**BD2-AK03X/ F2258-3N**	**BVP:262498**	1 unit	7.500
With fuse switch disconnector 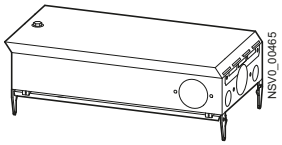	LV HRC fuse switch disconnector, size 00; bolt terminal	125	690	X	**BD2-AK03X/ GSTA00**	**BVP:262496**	1 unit	6.960
With fuse switch disconnector 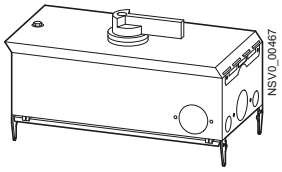	Bolt terminal							
	3-pole, IEC	125	400	X	**BD2-AK03X/ FS125IEC-3**	**BVP:262499**	1 unit	7.940
	3-pole, BS	125	400	X	**BD2-AK03X/ FS125BS-3**	**BVP:262500**	1 unit	7.940
	4-pole, IEC	125	400	X	**BD2-AK03X/ FS125IEC-4**	**BVP:262501**	1 unit	8.280
	4-pole, BS	125	400	X	**BD2-AK03X/ FS125BS-4**	**BVP:262502**	1 unit	8.280
With miniature circuit breaker 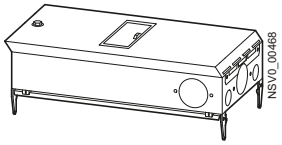	3-pole, 125 A, characteristic C	125	400	X	**BD2-AK03M2/ A1253**	**BVP:262485**	1 unit	5.800
	3-pole + N, 125 A, characteristic C	125	400	X	**BD2-AK03M2/ A1253N**	**BVP:262486**	1 unit	6.000
For free arrangement of components (P_V max. 40 W)								
• With mounting plate 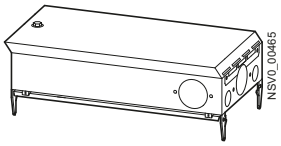	Mounting space for 9 modular widths (MW)	125	690	X	**BD2-AK03X/F**	**BVP:262487**	1 unit	5.200
• With device installation unit 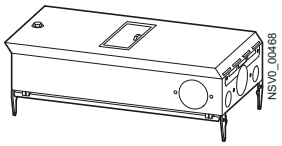	Mounting space for 9 modular widths (MW)	125	690	X	**BD2-AK03M2/F**	**BVP:262488**	1 unit	5.300

Special colors available on request.

Fuse links are not included in scope of supply.

Use plastic cable glands with strain relief (not included in scope of supply).

*** You can order this quantity or a multiple thereof.**

Tap-off units

Version	Circuit breaker/ setting range	Rated current I_{nC}	Rated operational voltage U_e	SD	Type	Article No.	PS*/ P. unit	Weight per unit approx.
	A	A	V	d				kg
Sheet-steel enclosures, size 03, up to 125 A NEW								
With circuit breaker, normal switching capacity, with rotary operating mechanism, terminal connection								
With thermal-magnetic trip unit								
• 3-pole, switching capacity = 36 kA								
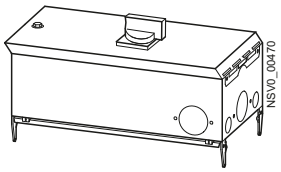	28 ... 40	40	400	X	**BD2-AK03/LSD-3VA11-S-040-3-TM240**	**BVP:662444**	1 unit	11.000
	44 ... 63	63	400	X	**BD2-AK03/LSD-3VA11-S-063-3-TM240**	**BVP:662446**	1 unit	11.000
	56 ... 80	80	400	X	**BD2-AK03/LSD-3VA11-S-080-3-TM240**	**BVP:662448**	1 unit	11.000
	70 ... 100	100	400	X	**BD2-AK03/LSD-3VA11-S-100-3-TM240**	**BVP:662440**	1 unit	11.000
	88 ... 125	125	400	X	**BD2-AK03/LSD-3VA11-S-125-3-TM240**	**BVP:662442**	1 unit	11.000
• 3-pole, switching capacity = 55 kA								
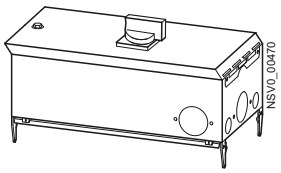	28 ... 40	40	400	X	**BD2-AK03/LSD-3VA11-M-040-3-TM240**	**BVP:662445**	1 unit	11.000
	44 ... 63	63	400	X	**BD2-AK03/LSD-3VA11-M-063-3-TM240**	**BVP:662447**	1 unit	11.000
	56 ... 80	80	400	X	**BD2-AK03/LSD-3VA11-M-080-3-TM240**	**BVP:662449**	1 unit	11.000
	70 ... 100	100	400	X	**BD2-AK03/LSD-3VA11-M-100-3-TM240**	**BVP:662441**	1 unit	11.000
	88 ... 125	125	400	X	**BD2-AK03/LSD-3VA11-M-125-3-TM240**	**BVP:662443**	1 unit	11.000
With electronic trip unit, selective								
• 3-pole, switching capacity = 55 kA								
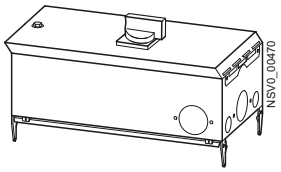	16 ... 40	40	400	X	**BD2-AK03/LSD-3VA21-M-040-3-ET350**	**BVP:662454**	1 unit	11.000
	25 ... 63	63	400	X	**BD2-AK03/LSD-3VA21-M-063-3-ET350**	**BVP:662456**	1 unit	11.000
	40 ... 100	100	400	X	**BD2-AK03/LSD-3VA21-M-100-3-ET350**	**BVP:662450**	1 unit	11.000
	63 ... 125	125	400	X	**BD2-AK03/LSD-3VA21-M-125-3-ET350**	**BVP:662452**	1 unit	11.000
• 4-pole, switching capacity = 55 kA								
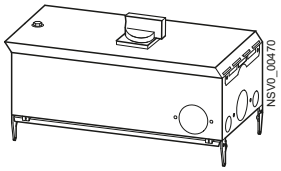	16 ... 40	40	400	X	**BD2-AK03/LSD-3VA21-M-040-4-ET350**	**BVP:662455**	1 unit	11.000
	25 ... 63	63	400	X	**BD2-AK03/LSD-3VA21-M-063-4-ET350**	**BVP:662457**	1 unit	11.000
	40 ... 100	100	400	X	**BD2-AK03/LSD-3VA21-M-100-4-ET350**	**BVP:662451**	1 unit	11.000
	63 ... 125	125	400	X	**BD2-AK03/LSD-3VA21-M-125-4-ET350**	**BVP:662453**	1 unit	11.000
Empty tap-off unit, prepared for installation of circuit breakers 3VA								
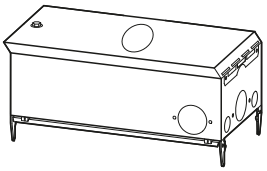	16 ... 40	40	400	X	**BD2-AK03/LSD-3VAXX-M-125-3-F**	**BVP:662458**	1 unit	6.500
				X	**BD2-AK03/LSD-3VAXX-M-125-4-F**	**BVP:662459**	1 unit	6.500

Special colors available on request.

Use plastic cable glands with strain relief (not included in scope of supply).

* You can order this quantity or a multiple thereof.

Version	Circuit breaker/ setting range	Rated current I_{nC}	Rated operational voltage U_e	SD	Type	Article No.	PS*/ P. unit	Weight per unit approx.
	A	A	V	d				kg
Sheet-steel enclosures, size 04, up to 225 A NEW								
With circuit breaker, with thermal-magnetic trip unit								
• 3-pole, switching capacity = 36 kA, with rotary operating mechanism, terminal connection								
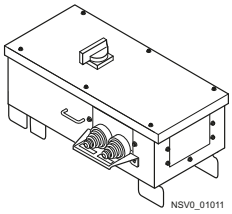 NSV0_01011	112 ... 160	160	400	X	**BD2-AK04/LSD-3VA12-S-160-3-TM240**	**BVP:662462**	1 unit	27.000
	140 ... 200	200	400	X	**BD2-AK04/LSD-3VA12-S-200-3-TM240**	**BVP:662466**	1 unit	27.000
	175 ... 250	225	400	X	**BD2-AK04/LSD-3VA12-S-250-3-TM240**	**BVP:662470**	1 unit	27.000
• 3-pole, switching capacity = 36 kA, with motor operating mechanism, terminal connection								
	112 ... 160	160	400	X	**BD2-AK04/LSM-3VA12-S-160-3-TM240**	**BVP:662460**	1 unit	27.500
	140 ... 200	220	400	X	**BD2-AK04/LSM-3VA12-S-200-3-TM240**	**BVP:662464**	1 unit	27.500
	175 ... 250	225	400	X	**BD2-AK04/LSM-3VA12-S-250-3-TM240**	**BVP:662468**	1 unit	27.500
• 3-pole, switching capacity = 55 kA, with rotary operating mechanism, terminal connection								
	112 ... 160	160	400	X	**BD2-AK04/LSD-3VA12-M-160-3-TM240**	**BVP:662463**	1 unit	27.000
	140 ... 200	200	400	X	**BD2-AK04/LSD-3VA12-M-200-3-TM240**	**BVP:662467**	1 unit	27.000
	175 ... 250	225	400	X	**BD2-AK04/LSD-3VA12-M-250-3-TM240**	**BVP:662471**	1 unit	27.000
• 3-pole, switching capacity = 55 kA, with motor operating mechanism, terminal connection								
	112 ... 160	160	400	X	**BD2-AK04/LSM-3VA12-M-160-3-TM240**	**BVP:662461**	1 unit	27.500
	140 ... 200	200	400	X	**BD2-AK04/LSM-3VA12-M-200-3-TM240**	**BVP:662465**	1 unit	27.500
	175 ... 250	225	400	X	**BD2-AK04/LSM-3VA12-M-250-3-TM240**	**BVP:662469**	1 unit	27.500

*** You can order this quantity or a multiple thereof.**

Tap-off units

Version	Circuit breaker/ setting range	Rated current I_{nC}	Rated operational voltage U_e	SD	Type	Article No.	PS*/ P. unit	Weight per unit approx.
	A	A	V	d				kg
With circuit breaker, with electronic trip unit, selective								
• 3-pole, switching capacity = 55 kA, with rotary operating mechanism, terminal connection								
	63 ... 160	160	400	X	**BD2-AK04/LSD-3VA22-M-160-3-ET350**	**BVP:662473**	1 unit	28.000
	100 ... 250	215	400	X	**BD2-AK04/LSD-3VA22-M-250-3-ET350**	**BVP:662477**	1 unit	28.000
• 3-pole, switching capacity = 55 kA, with motor operating mechanism, terminal connection								
	63 ... 160	160	400	X	**BD2-AK04/LSM-3VA22-M-160-3-ET350**	**BVP:662472**	1 unit	28.500
	100 ... 250	215	400	X	**BD2-AK04/LSM-3VA22-M-250-3-ET350**	**BVP:662476**	1 unit	28.500
• 4-pole, switching capacity = 55 kA, with rotary operating mechanism, terminal connection								
	63 ... 160	160	400	X	**BD2-AK04/LSD-3VA22-M-160-4-ET350**	**BVP:662475**	1 unit	29.000
	100 ... 250	215	400	X	**BD2-AK04/LSD-3VA22-M-250-4-ET350**	**BVP:662479**	1 unit	29.000
• 4-pole, switching capacity = 55 kA, with motor operating mechanism, terminal connection								
	63 ... 160	160	400	X	**BD2-AK04/LSM-3VA22-M-160-4-ET350**	**BVP:662474**	1 unit	29.500
	100 ... 250	215	400	X	**BD2-AK04/LSM-3VA22-M-250-4-ET350**	**BVP:662478**	1 unit	29.500
Empty tap-off unit, prepared for installation of circuit breakers 3VA								
				X	**BD2-AK04/LSD-3VA12-M-250-3-F**	**BVP:662480**	1 unit	26.000
				X	**BD2-AK04/LSD-3VA22-M-250-3-F**	**BVP:662481**	1 unit	26.000
				X	**BD2-AK04/LSD-3VA12-M-250-4-F**	**BVP:662482**	1 unit	26.000
				X	**BD2-AK04/LSD-3VA22-M-250-4-F**	**BVP:662483**	1 unit	26.000

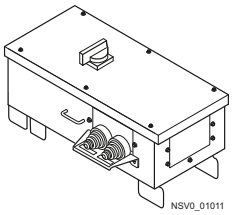

Special colors available on request.

Use plastic cable glands with strain relief (not included in scope of supply).

For BD2-AK04, -AK05 and -AK06, the KT3 or KT4 cable grommet is included in scope of supply.

The tap-off units, size 05 and 06, are suitable only for systems 630 A to 1250 A.

* You can order this quantity or a multiple thereof.

Version	Circuit breaker/ setting range	Rated current I_{nC}	Rated operational voltage U_e	SD	Type	Article No.	PS*/ P. unit	Weight per unit approx.
	A	A	V	d				kg
Sheet-steel enclosures, size 05, up to 400 A NEW								
With circuit breaker, with thermal-magnetic trip unit 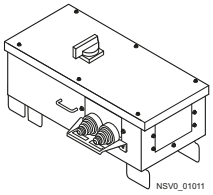								
Switching capacity = 36 kA, with rotary operating mechanism, terminal connection								
• 3-pole				X	**BD2-AK05/LSD-3VA13-S-400-3-TM240**	1)		
• 4-pole				X	**BD2-AK05/LSD-3VA13-S-400-4-TM240**	1)		
Switching capacity = 36 kA, with motor operating mechanism, terminal connection								
• 3-pole				X	**BD2-AK05/LSM-3VA13-S-400-3-TM240**	1)		
• 4-pole				X	**BD2-AK05/LSM-3VA13-S-400-4-TM240**	1)		
Switching capacity = 55 kA, with rotary operating mechanism, terminal connection								
• 3-pole				X	**BD2-AK05/LSD-3VA13-M-400-3-TM240**	1)		
• 4-pole				X	**BD2-AK05/LSD-3VA13-M-400-4-TM240**	1)		
Switching capacity = 55 kA, with motor operating mechanism, terminal connection								
• 3-pole				X	**BD2-AK05/LSM-3VA13-M-400-3-TM240**	1)		
• 4-pole				X	**BD2-AK05/LSM-3VA13-M-400-4-TM240**	1)		
With circuit breaker, with electronic trip unit, selective 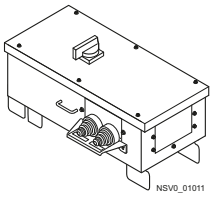								
Switching capacity = 55 kA, with rotary operating mechanism, terminal connection								
• 3-pole	160 ... 400	380	400	X	**BD2-AK05/LSD-3VA24-M-400-3-ET350**	**BVP:662489**	1 unit	45.000
• 4-pole	160 ... 400	380	400	X	**BD2-AK05/LSD-3VA24-M-400-4-ET350**	**BVP:662491**	1 unit	46.000
Switching capacity = 55 kA, with motor operating mechanism, terminal connection								
• 3-pole	160 ... 400	380	400	X	**BD2-AK05/LSM-3VA24-M-400-3-ET350**	**BVP:662488**	1 unit	45.500
• 4-pole	160 ... 400	380	400	X	**BD2-AK05/LSM-3VA24-M-400-4-ET350**	**BVP:662490**	1 unit	46.500
Empty tap-off unit, prepared for installation of circuit breakers 3VA 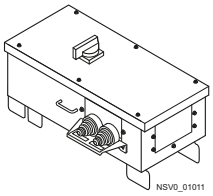								
				X	**BD2-AK05/LSD-3VA24-M-400-3-F**	**BVP:662492**	1 unit	40.000
				X	**BD2-AK05/LSD-3VA24-M-400-4-F**	**BVP:662493**	1 unit	40.000
				X	**BD2-AK05/LSD-3VA13-M-400-3-F**	**BVP:662494**	1 unit	40.000
				X	**BD2-AK05/LSD-3VA13-M-400-4-F**	**BVP:662495**	1 unit	40.000

1) The availability of the corresponding tap-off units is communicated via newsletter.

*** You can order this quantity or a multiple thereof.**

Tap-off units

Version	Circuit breaker/ setting range	Rated current I_{nC}	Rated operational voltage U_e	SD	Type	Article No.	PS*/ P. unit	Weight per unit approx.
	A	A	V	d				kg
Sheet-steel enclosures, size 06, up to 520 A NEW								
With circuit breaker, with thermal-magnetic trip unit 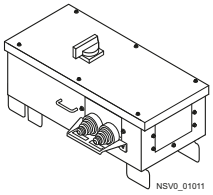								
Switching capacity = 36 kA, with rotary operating mechanism, terminal connection								
• 3-pole				X	**BD2-AK06/LSD-3VA14-S-630-3-TM240**	1)		
• 4-pole				X	**BD2-AK06/LSD-3VA14-S-630-4-TM240**	1)		
Switching capacity = 36 kA, with motor operating mechanism, terminal connection								
• 3-pole				X	**BD2-AK06/LSM-3VA14-S-630-3-TM240**	1)		
• 4-pole				X	**BD2-AK06/LSM-3VA14-S-630-4-TM240**	1)		
Switching capacity = 55 kA, with rotary operating mechanism, terminal connection								
• 3-pole				X	**BD2-AK06/LSD-3VA14-M-630-3-TM240**	1)		
• 4-pole				X	**BD2-AK06/LSD-3VA14-M-630-4-TM240**	1)		
Switching capacity = 55 kA, with motor operating mechanism, terminal connection								
• 3-pole				X	**BD2-AK06/LSM-3VA14-M-630-3-TM240**	1)		
• 4-pole				X	**BD2-AK06/LSM-3VA14-M-630-4-TM240**	1)		
With circuit breaker, with electronic trip unit, selective 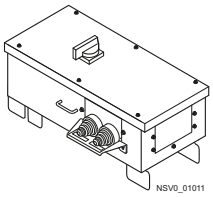								
Switching capacity = 55 kA, with rotary operating mechanism, terminal connection								
• 3-pole	250 - 630	550	400	X	**BD2-AK06/LSD-3VA25-M-630-3-ET350**	**BVP:662504**	1 unit	56.000
• 4-pole	250 - 630	550	400	X	**BD2-AK06/LSD-3VA25-M-630-4-ET350**	**BVP:662505**	1 unit	59.000

1) The availability of the corresponding tap-off units is communicated via newsletter.

* You can order this quantity or a multiple thereof.

Version	Fuse base/ fuse switch disconnector	Rated current I_{nC}	Rated operational voltage U_e	SD	Type	Article No.	PS*/ P. unit	Weight per unit approx.
		A	V	d				kg
Sheet-steel enclosures, size 04, 05 and 06, up to 530 A								
With fuse base, 3-pole, bolt terminal	NH1	250	690	X	**BD2-AK04/SNH1**	**BVP:610421**	1 unit	30.000
	NH2	400	690	X	**BD2-AK05/SNH2**	**BVP:610422**	1 unit	35.000
	NH3	530	690	X	**BD2-AK06/SNH3**	**BVP:610423**	1 unit	40.000
Sheet-steel enclosures, size 04 and 05, up to 320 A								
With fuse switch disconnector, bolt terminal								
• 3-pole	NH1, IEC	225	400	X	**BD2-AK04/ FS250IEC-3**	**BVP:610409**	1 unit	30.000
	NH1, BS	225	400	X	**BD2-AK04/ FS250BS-3**	**BVP:610411**	1 unit	30.000
	NH2, IEC	320	400	X	**BD2-AK05/ FS400IEC-3**	**BVP:610413**	1 unit	35.000
	NH2, BS	320	400	X	**BD2-AK05/ FS400BS-3**	**BVP:610415**	1 unit	35.000
• 4-pole	NH1, IEC	225	400	X	**BD2-AK04/ FS250IEC-4**	**BVP:610410**	1 unit	30.000
	NH1, BS	225	400	X	**BD2-AK04/ FS250BS-4**	**BVP:610412**	1 unit	30.000
	NH2, IEC	320	400	X	**BD2-AK05/ FS400IEC-4**	**BVP:610414**	1 unit	35.000
	NH2, BS	320	400	X	**BD2-AK05/ FS400BS-4**	**BVP:610416**	1 unit	35.000

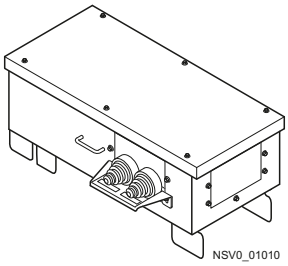

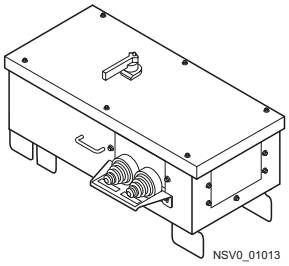

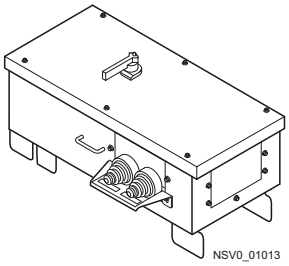

Special colors available on request.

Fuse links are not included in scope of supply.

Use plastic cable glands with strain relief (not included in scope of supply).

For BD2-AK04, -AK05 and -AK06, the KT3 or KT4 cable grommet is included in scope of supply.

The tap-off units, size 05 and 06, are suitable only for systems 630 A to 1250 A.

*** You can order this quantity or a multiple thereof.**

Ancillary equipment units for international use

Selection and ordering data

Version	Can be used for	Max. power loss P_v	Rated operational voltage U_e	SD	Type	Article No.	PS*/ P. unit	Weight per unit approx.
		W	V	d				kg
Sheet-steel enclosures								
Ancillary equipment units, for free arrangement of components								
Integrated DIN rail for 8 MW (MW = modular width) 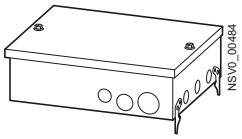	• Overvoltage protection • Remote control/remote switching • Intelligence • Fuse bases • Miniature circuit breakers (MCBs)	30	400	X	**BD2-GKX/F**	**BVP:203165**	1 unit	2.800
Sheet-steel enclosures with device installation unit								
Ancillary equipment units, for free arrangement of components								
Integrated DIN rail for 8 MW (MW = modular width) 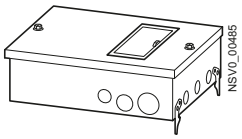	• Remote control/remote switching • Intelligence • Miniature circuit breakers (MCBs) • Energy counters	30	400	X	**BD2-GKM2/F**	**BVP:203166**	1 unit	2.500

Ancillary equipment units are used in combination with tap-off units AK02, AK2, AK03 or AK3.

Special colors available on request.

Including screw set for connecting the enclosures.

Use plastic cable glands with strain relief (not included in scope of supply).

* You can order this quantity or a multiple thereof.

Selection and ordering data

Version	SD	Rated current I_{nA} 160 A, 250 A, 400 A		PS*/ P. unit	Weight per unit approx.	SD	Rated current I_{nA} 630 A, 800 A, 1000 A, 1250 A		PS*/ P. unit	Weight per unit approx.
	d	Type	Article No.		kg	d	Type	Article No.		kg
Fixing										
Joint blocks 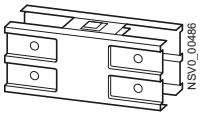	X	**BD2-400-EK**	**BVP:661391**	1 unit	3.500	X	**BD2-1250-EK**	**BVP:261989**	1 unit	6.480
End flanges 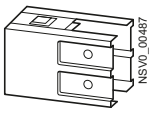	X	**BD2-400-FE**	**BVP:043977**	1 unit	0.980	X	**BD2-1250-FE**	**BVP:261990**	1 unit	1.280
Fixing brackets for flat and edgewise installation, two per fixing bracket 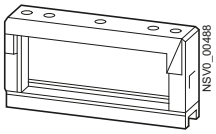	X	**BD2-400-BB**	**BVP:045154**	1 unit	0.440	X	**BD2-1250-BB**	**BVP:261987**	1 unit	0.540
Spacers for 40 mm distance, suitable for fixing bracket (two per fixing bracket) 	X	**BD2-DSB**	**BVP:203532**	10 units	0.030	X	**BD2-DSB**	**BVP:203532**	10 units	0.030
Spacer brackets for wall and ceiling mounting, suitable for fixing bracket 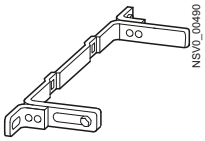	X	**BD2-BD**	**BVP:034228**	1 unit	0.440	X	**BD2-BD**	**BVP:034228**	1 unit	0.440
Fixing elements for vertical busbar runs										
• Wall mounting, distance from wall adjustable 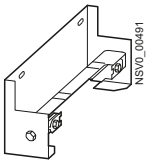	X	**BD2-BWV**	**BVP:045503**	1 unit	1.560	X	**BD2-BWV**	**BVP:045503**	1 unit	1.560
• Ceiling mounting 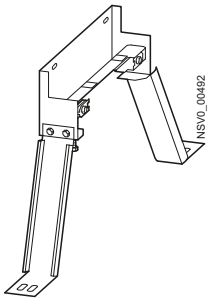	X	**BD2-BDV**	**BVP:045504**	1 unit	4.500	X	**BD2-BDV**	**BVP:045504**	1 unit	4.500
Fixing for mounting rail e.g. Unistrut P1000, two per fixing point  	X	**BD2-BVC**	**BVP:611348**	1 unit	0.500	X	**BD2-BVC**	**BVP:611348**	1 unit	0.500

* You can order this quantity or a multiple thereof.

Additional equipment

Version	SD	Rated current I_{nA} 160 A, 250 A, 400 A		PS*/ P. unit	Weight per unit approx.	SD	Rated current I_{nA} 630 A, 800 A, 1000 A, 1250 A		PS*/ P. unit	Weight per unit approx.
	d	Type	Article No.		kg	d	Type	Article No.		kg
Fixing										
Fixing brackets for vertical wall mounting on a connecting flange 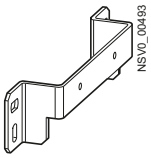	X	**BD2-BVF**	**BVP:203531**	1 unit	0.500	X	**BD2-BVF**	**BVP:203531**	1 unit	0.500
Protective sleeves 	X	**BD2-400-D**	**BVP:045505**	1 unit	4.000	X	**BD2-1250-D**	**BVP:261988**	1 unit	4.000
Cable entry										
Cable entry plates for single-core cable entry, undrilled (drilling template included in scope of supply) 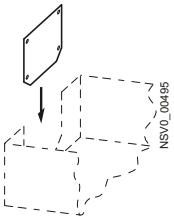										
• Suitable for end feeding units 250 A	X	**BD2-250-EBAL**	**BVP:203530**	1 unit	0.300		--			
• Suitable for end feeding units or cabling boxes										
- Up to 400 A or 1000 A	X	**BD2-400-EBAL**	**BVP:045507**	1 unit	0.500	X	**BD2-1000-EBAL**	**BVP:261976**	1 unit	1.000
- For 1250 A		--				X	**BD2-1250-EBAL**	**BVP:261982**	1 unit	2.660
• For use with center feeding units										
- Up to 400 A or 1000 A	X	**BD2-400-MBAL**	**BVP:045509**	1 unit	0.500	X	**BD2-1000-MBAL**	**BVP:261980**	1 unit	1.000
Cabling boxes, cable entry for multi-core cables from 2 sides, suitable for feeding units 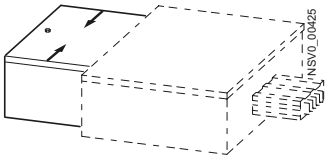										
• For 400 A or 1000 A	X	**BD2-400-KR**	**BVP:045511**	1 unit	3.100	X	**BD2-1000-KR**	**BVP:261978**	1 unit	5.000
• For 1250 A		--				X	**BD2-1250-KR**	**BVP:261984**	1 unit	5.000

Version	SD	Rated current I_n 160 ... 1250 A		PS*/ P. unit	Weight per unit approx.
	d	Type	Article No.		kg
Fire barrier					
Fire barrier approval kits (required only for Germany[1])					
• S 90	X	**BD2-S90-ZUL-D**	**BVP:611397**	1 unit	0.200
• S 120	X	**BD2-S120-ZUL-D**	**BVP:611398**	1 unit	0.200

[1] Approval papers for Euro standard available soon

Version	SD	Type	Article No.	PS*/ P. unit	Weight per unit approx.
	d				kg
DC labels					
	X	**BD2-LABEL-DC**	**BVP:662524**		

* You can order this quantity or a multiple thereof.

Version	SD	Rated current I_{nA} 160 A, 250 A, 400 A		PS*/ P. unit	Weight per unit approx.	SD	Rated current I_{nA} 630 A, 800 A, 1000 A, 1250 A		PS*/ P. unit	Weight per unit approx.
	d	Type	Article No.		kg	d	Type	Article No.		kg
Flanges for degree of protection IP55										
Flanges for IP55[1]										
• At all connection points 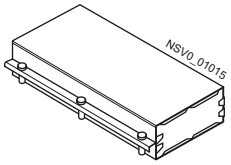	X	**BD2-400-FS**	**BVP:610369**	1 unit	1.700	X	**BD2-1250-FS**	**BVP:610370**	1 unit	2.100
• At end flanges 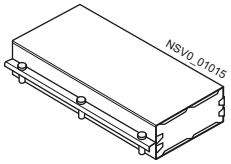	X	**BD2-400-FSE**	**BVP:610371**	1 unit	1.900	X	**BD2-1250-FSE**	**BVP:610372**	1 unit	2.600
• At tap-off points 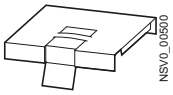	X	**BD2-FAS**	**BVP:045519**	1 unit	0.220	X	**BD2-FAS**	**BVP:045519**	1 unit	0.220

[1] Not for use with BD2- ... -R.

Version	For tap-off unit	SD	Type	Article No.	PS*/ P. unit	Weight per unit approx.
	Type	d				kg
Additional components for degree of protection IP55						
Seals for tap-off units						
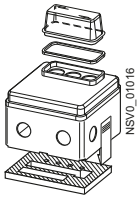	BD2-AK1/...	X	**BD2-AK1-IP55**	**BVP:610373**	1 unit	0.030
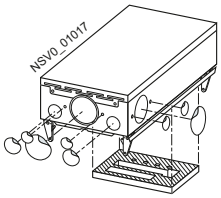	BD2-AK02X/...	X	**BD2-AK02X-IP55**	**BVP:610374**	1 unit	0.040
	BD2-AK03X/...	X	**BD2-AK03X-IP55**	**BVP:610375**	1 unit	0.040
	BD2-AK2X/...	X	**BD2-AK2X-IP55**	**BVP:611061**	1 unit	0.070
	BD2-AK3X/...	X	**BD2-AK3X-IP55**	**BVP:611062**	1 unit	0.070
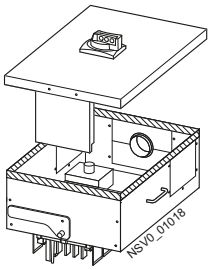	BD2-AK04/...	X	**BD2-AK04-IP55**	**BVP:611063**	1 unit	0.050
	BD2-AK05/...	X	**BD2-AK05-IP55**	**BVP:611064**	1 unit	0.070
	BD2-AK06/...	X	**BD2-AK06-IP55**	**BVP:611065**	1 unit	0.070

* You can order this quantity or a multiple thereof.

Additional equipment

Version	Socket outlets	SD	Type	Article No.	PS*/ P. unit	Weight per unit approx.
		d				kg
Socket outlets for tap-off units and ancillary equipment units						
Socket outlets With adapter enclosure, with wiring, with fixing kit						
• Schuko socket outlet	16 A, 3-pole	X	**BD2-SD163**	**BVP:203253**	1 unit	0.280
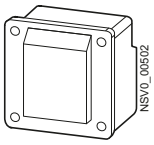						
• CEE socket outlet	16 A, 3-pole	X	**BD2-CEE163**	**BVP:203254**	1 unit	0.260
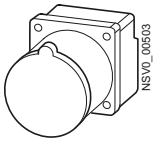	16 A, 5-pole	X	**BD2-CEE165**	**BVP:203255**	1 unit	0.310
	32 A, 5-pole	X	**BD2-CEE325**	**BVP:203256**	1 unit	0.350
Adapter enclosures For socket outlets with fixing kit						
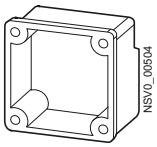		X	**BD2-AG**	**BVP:203257**	1 unit	0.150
Adapter plates Suitable for adapter enclosure						
• For customized socket outlet cut-outs		X	**BD2-APO**	**BVP:203258**	1 unit	0.090
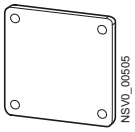						
• With socket outlet cut-out, diameter 44 mm		X	**BD2-APM**	**BVP:203259**	1 unit	0.060
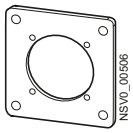						

* You can order this quantity or a multiple thereof.

Overview

Specimen text for tenders

Item	Quantity	Description	Unit price		Amount	
	... m	Busbar trunking system (see Appendix for diagram) • As design-verified low-voltage switchgear and controlgear assembly IEC/EN 61439-1 and -6 • BD01, BD2, LD, LR design-verified according to IEC 61439-1 and -6 • Rated current, corresponds to thermal rated current at max. +40 °C and +35 °C in the 24-hour average for indoor installation • Rated insulation voltage U_i = 690 V AC, 800 V DC • Rated operational voltage ...V, ...Hz • Rated peak withstand current of busbar trunking system, ... kA tested according to IEC/EN 61439-1 • Degree of protection IP52; increase to IP55 with additional equipment • 5-conductor configuration: L1, L2, L3, N, PE • Busbars: Nickel-plated and tinned aluminum or nickel-plated and tinned copper; supported by insulated busbar supports • Tested for sprinkler systems (with additional equipment) • Halogen-free system • Trunking units sheet-steel enclosed, galvanized and with paint finish; light gray RAL 7035 • Busbar connection via joint block with built-in expansion compensation • Tap-off points: On two sides every 0.5 m; mutually offset 0.25 m • Supplied ready for connection with all assembly parts • Made by Siemens • Type BD2-... Comprising:			

Configuration information

Type code BD2 for various conductor versions

BD2 . - . - ... - ... - ...

(Details of length)

(Type length)

Current [A]

Aluminum	Copper
160	160
250	250
400	400
630	630
800	800
1000	1000
	1250

3: L1, L2, L3, 1/1 N, 1/1 PE; 12 tap-off points (N conductor with 150 or 200 percent cross-section on request)

A: Aluminum
C: Copper

BD2 . - ... - ... - ...

(Length details with junction unit)

(Type junction unit, feeding unit)

Current [A]

Aluminum	Copper
250	250
400	400
1000	1000
	1250

A: Aluminum
C: Copper

Sizes of the trunking units (cross-sections)

System size 1 System size 2

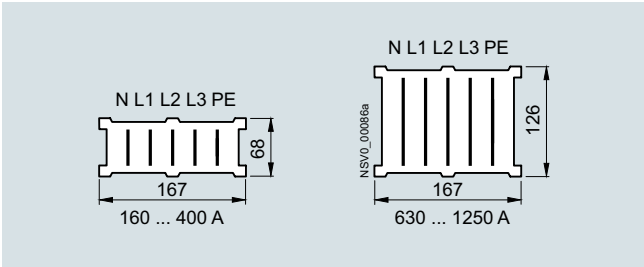

BD2A-3, BD2C-3 trunking units,
junction units, BD2A-..., BD2C-... feeding units

Tap-off units		
	Molded-plastic enclosure up to 25 A With circuit breaker up to 250 A With fuse up to 250 A	Molded-plastic enclosure up to 25 A With circuit breaker up to 250 A With fuse up to 250 A With circuit breaker up to 530 A With fuse up to 530 A

Design

Notes on supporting structures

Structures made from standard materials.

All struts and beams are designed for mounting without a BD2-...-BB fixing bracket.

Examples for mounting edgewise runs

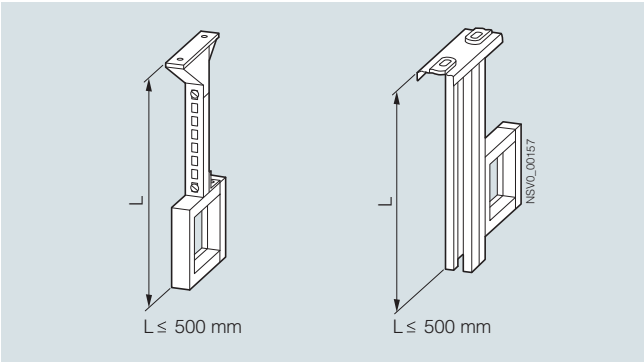

C strut with accessories (left) and double-C strut (right)

Length L in increments of 100 mm

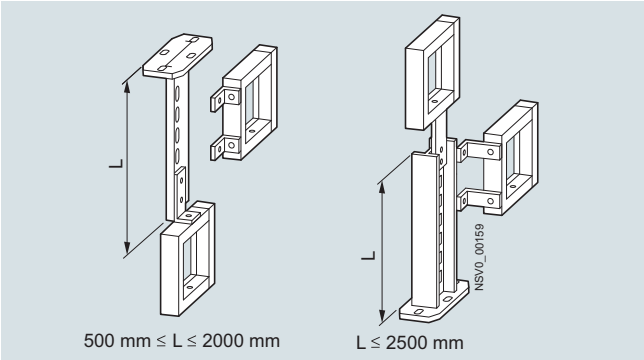

Z strut (left) and H strut (right)

Length L in increments of 100 mm.
Trunking units can be secured at the side and at the center of the strut

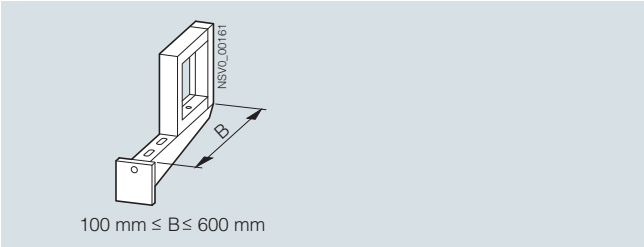

Wall beam

Width B in 50 mm increments

Examples for mounting flat runs

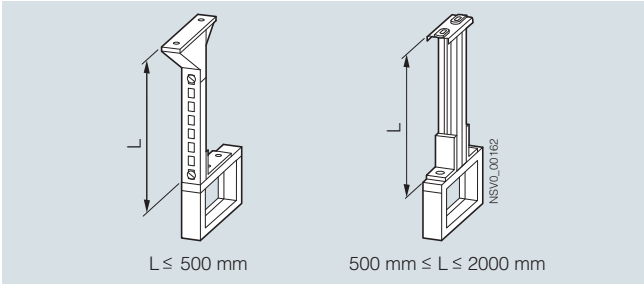

C strut with accessories (left) and double-C strut (right)

Length L in increments of 100 mm

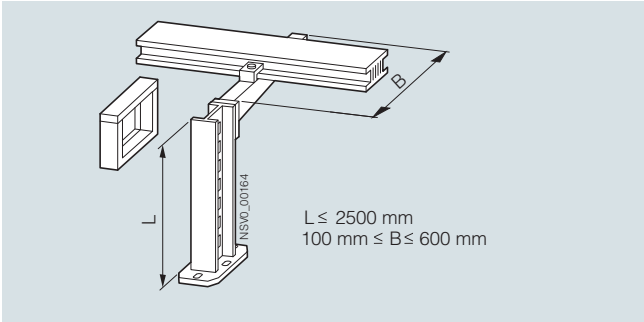

H strut with beam (without BD2-...-BB fixing bracket)

Length L in increments of 100 mm,
width B in increments of 50 mm.

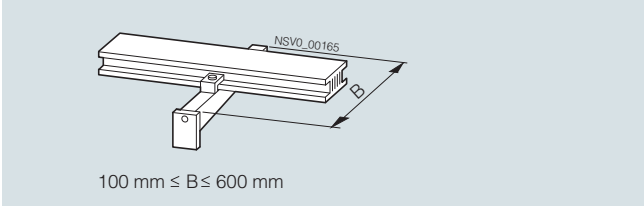

Wall beam (without BD2-...-BB fixing bracket)

Width B in increments of 50 mm.

Example for mounting busbar runs between floors

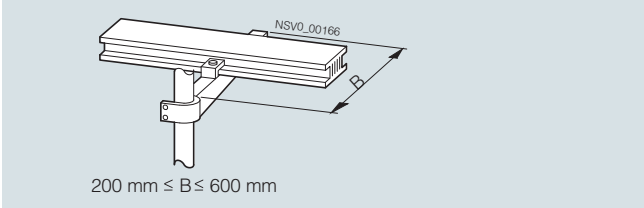

Tubular beam

Width B in increments of 50 mm.
For securing runs without BD2-...-BB bracket

Configuration information

Suspension support on flange mount with terminal

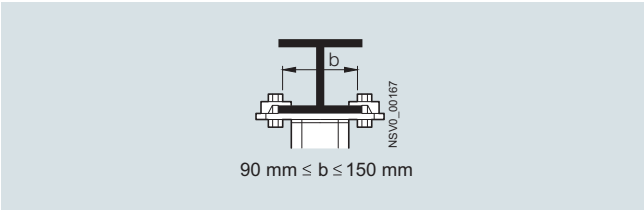

For Z and H struts only

Securing trunking units on the cable trays

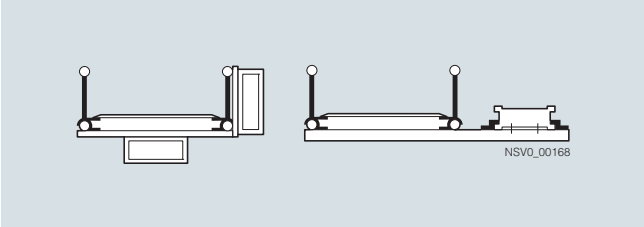

Can be fitted to standard cable trays using
BD2-...-BB fixing bracket or angle clamp. Sundries required

Clamp terminals

For securing trunking units to the illustrated supporting structures.

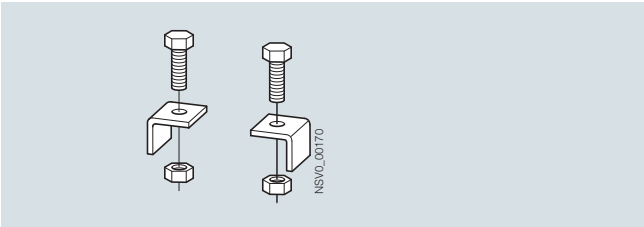

Clamp terminals

Mounting on mounting rails Unistrut P1000

For vertical installation

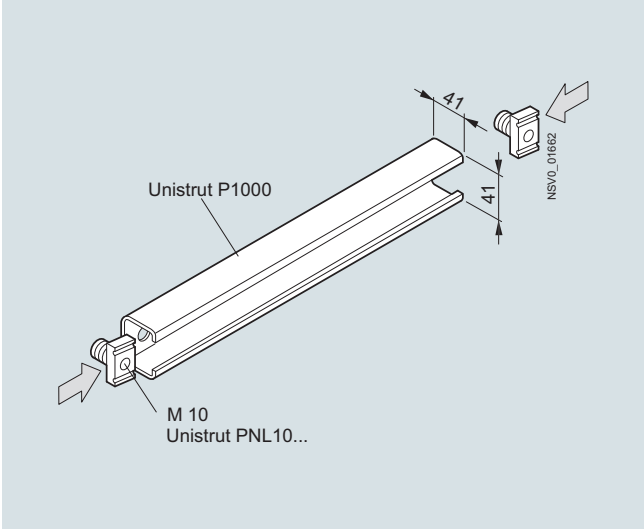

Mounting rail Unistrut P1000

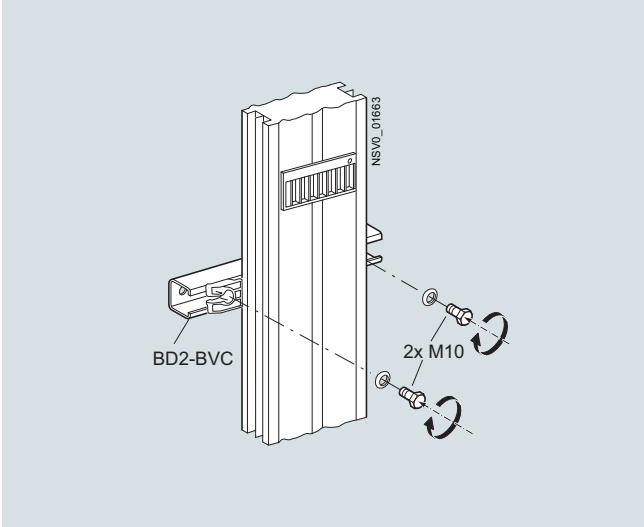

Mounting BD2-BVC

Mounting rail, rail nuts and screws are not included in the scope of supply

Basic configuration information

To simplify the configuration of BD2 systems, engineering symbols have been introduced. On the configuration drawings, these symbols clearly indicate the component mounting position, the phase sequence, the open busbar end, the end with the terminal, the position of the flange cover and the side from which the terminal can be accessed.

The following conventions apply to all components of the busbar run (feeding units, straight trunking units and junction units):

Open busbar end

The PE side is marked with a bold black line.

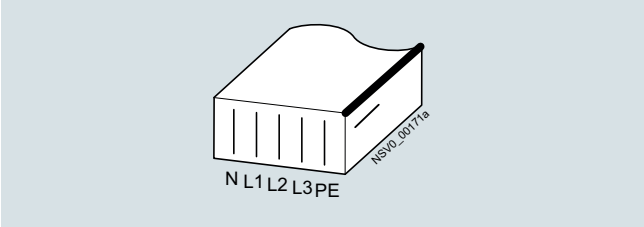

Phase sequence, PE on the right

Terminal end of the trunking unit

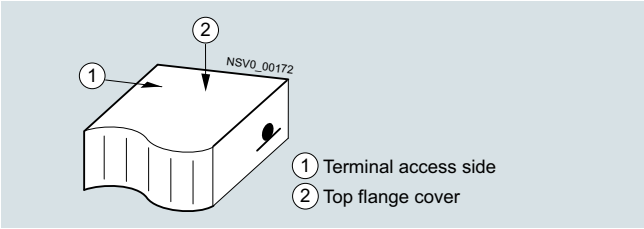

Example:

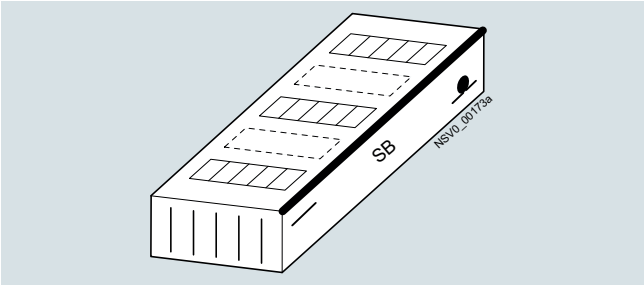

Straight trunking unit with tap-off points on both sides;
Type: BD2.-...-SB-.

The configuration symbols are used on the selection data pages.

Determining the orientation of L-units

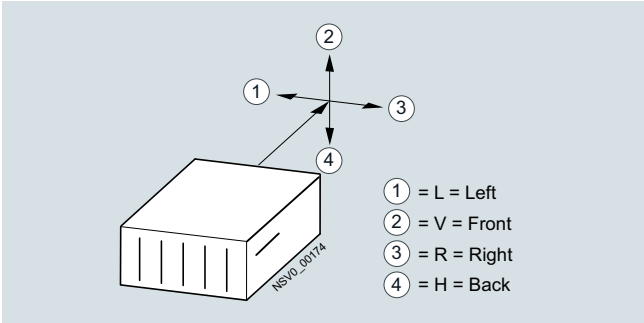

Example:

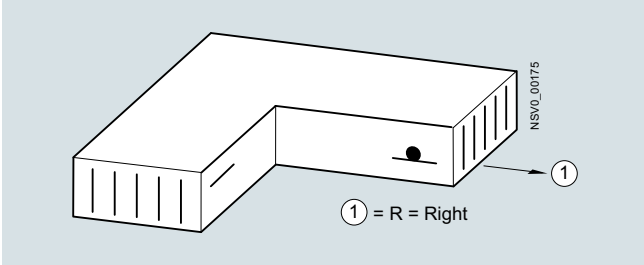

Elbow, right, Type: BD2.-...-LR

Determining the orientation of feeding units

On feeding units, the position of the cabling box relative to the trunking unit is not critical for type selection, since the busbar connection flange can be turned on site to provide the required phase sequence.

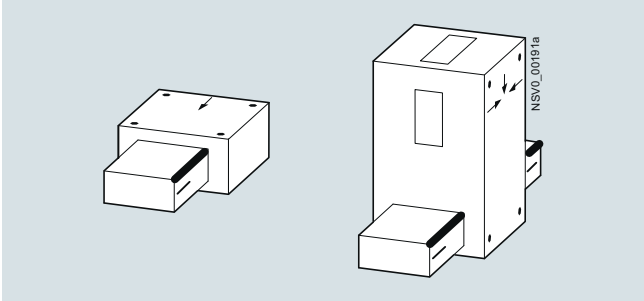

End feeding unit (left) and center feeding unit (right)

Configuration information

Route planning: horizontal installation

Mounting positions

With the BD2 system, the mounting position can be chosen as required, allowing a horizontal busbar run to be laid out in two ways:

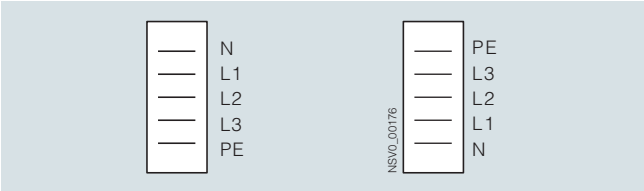

Horizontal, edgewise

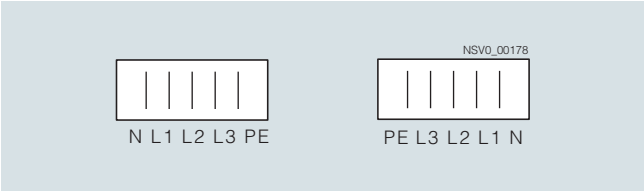

Horizontal, flat

As can be seen from the illustration, any phase sequence is possible. For power transmission in horizontal edgewise mounting position, a derating factor (× 0.9) is necessary.

This applies for straight trunking units and junction units. The configuration symbol identifying the type shown on the selection page only needs to be turned to the desired mounting position in the engineering drawing.

Example:

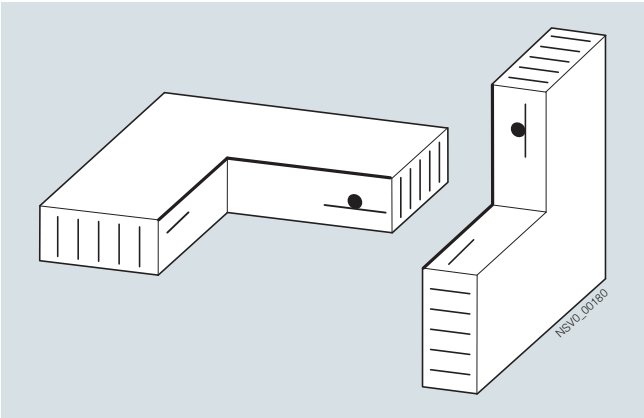

Elbow, right, Type: BD2.-...-LR-, flat and edgewise mounting

Horizontal edgewise mounting has the advantage of a larger suspension span and the need for less additional equipment.

Space requirement

To ensure easier mounting of the trunking units and tap-off units, minimum clearances from the building elements must be observed when planning the route.

Busbar trunking system without tap-off units:

Minimum dimensions for busbar trunking system without tap-off units, including system-compatible fixing brackets mounted horizontally on rack or wall beam:

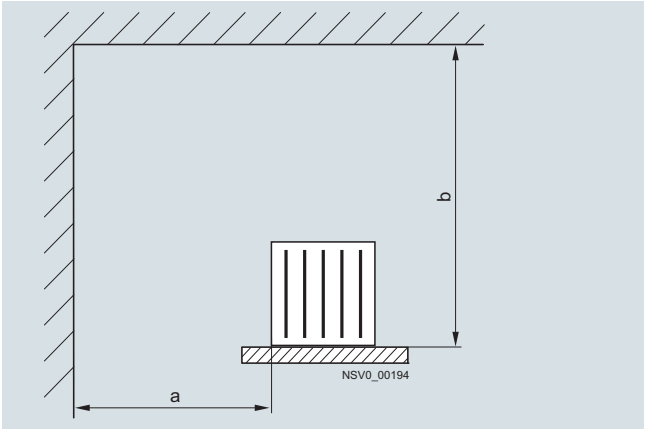

Busbar system	Dimension a mm	Dimension b mm
BD2A(C)-.-160(-400)	100	160
BD2A(C)-.-630(-1250)	100	280

Busbar trunking system with tap-off units:

Busbar trunking system with tap-off units, including system-compatible fixing brackets mounted horizontally on rack or wall beam. The minimum dimension a applies for the front cable entry.

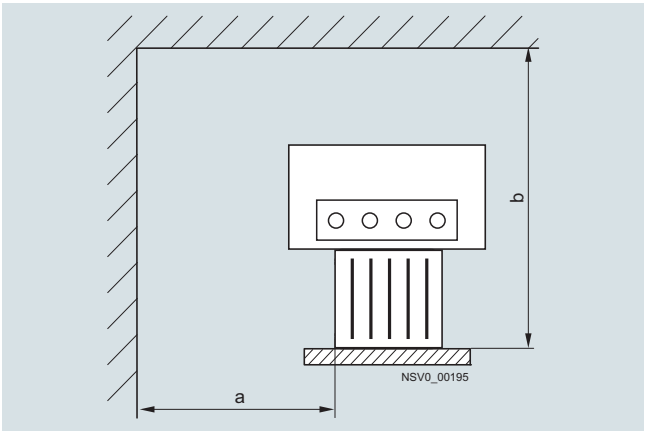

Busbar system	Dimension a mm	Dimension b mm
BD2A(C)-.-160(-400)	300	620
BD2A(C)-.-630(-1250)	300	680

For a configuring example for horizontal installation, see page 4/77.

Route planning: vertical installation

Mounting positions

When engineering vertical busbar runs (see page 4/79), the height of the floor measured from the center of one ceiling to the center of the next determines the choice of busbar lengths. If no fire barriers are required, standard lengths with protective sleeves can be used. In this case, a distance of at least 0.185 m must be maintained between the end of the trunking unit enclosure and the upper edge of the protective sleeve.

For vertically mounted systems, only one mounting position is possible. The PE bar must always be on the right-hand side, and the trunking unit end with the joint block must point towards the top. This ensures that

- the flange cover can be push-fitted to the terminal from the front and the screws can be tightened
- the tap-off units are not mounted upside-down, i.e. they can only be fitted in the correct position.

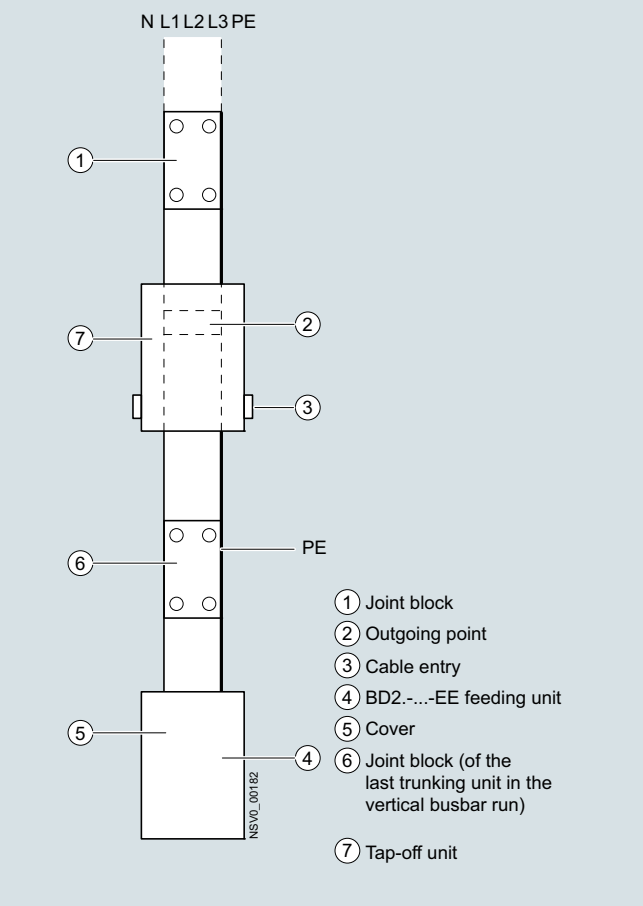

No derating is required for vertical busbar runs.

For more information about vertical installation, see page 4/79.

Space requirement

To ensure easier mounting of the trunking units and tap-off units, minimum clearances from the building's elements must be observed when planning the route.

Busbar trunking system without tap-off units:

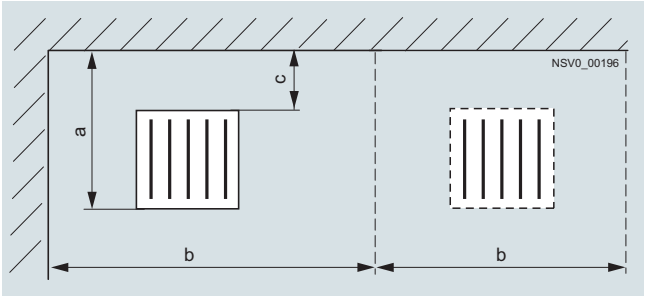

Busbar system (including fixing bracket)	Dimension a mm	Dimension b[1] mm	Dimension c[2] mm
BD2A(C)-.-160(-400)	130	640	30
BD2A(C)-.-630(-1250)	170	640	30

[1] Space requirement due to fixing bracket.

[2] Distance from wall due to fixing bracket.

Busbar trunking system with tap-off units:

A busbar system with connected tap-off unit is illustrated. Cable entry is from the bottom.

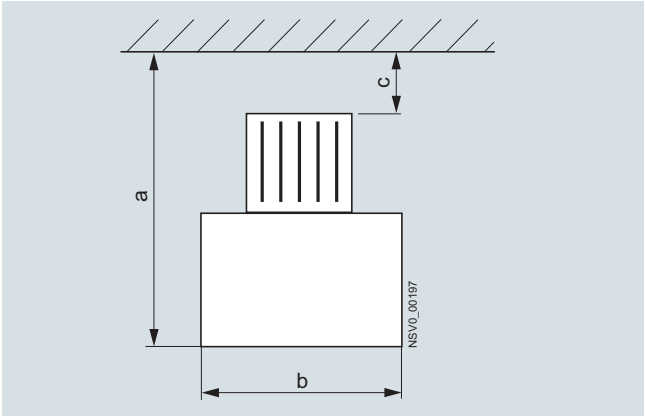

Busbar system (including fixing bracket)	Dimension a mm	Dimension b mm	Dimension c[1] mm
BD2A(C)-.-160(-400)	660	640	30
BD2A(C)-.-630(-1250)	700	640	30

[1] Distance from wall due to fixing bracket.

Configuration information

Fire barrier

The fire barrier must always be seated centrally in the fire ceiling. Both standard trunking units and trunking units with optional lengths can be equipped with fire barriers.

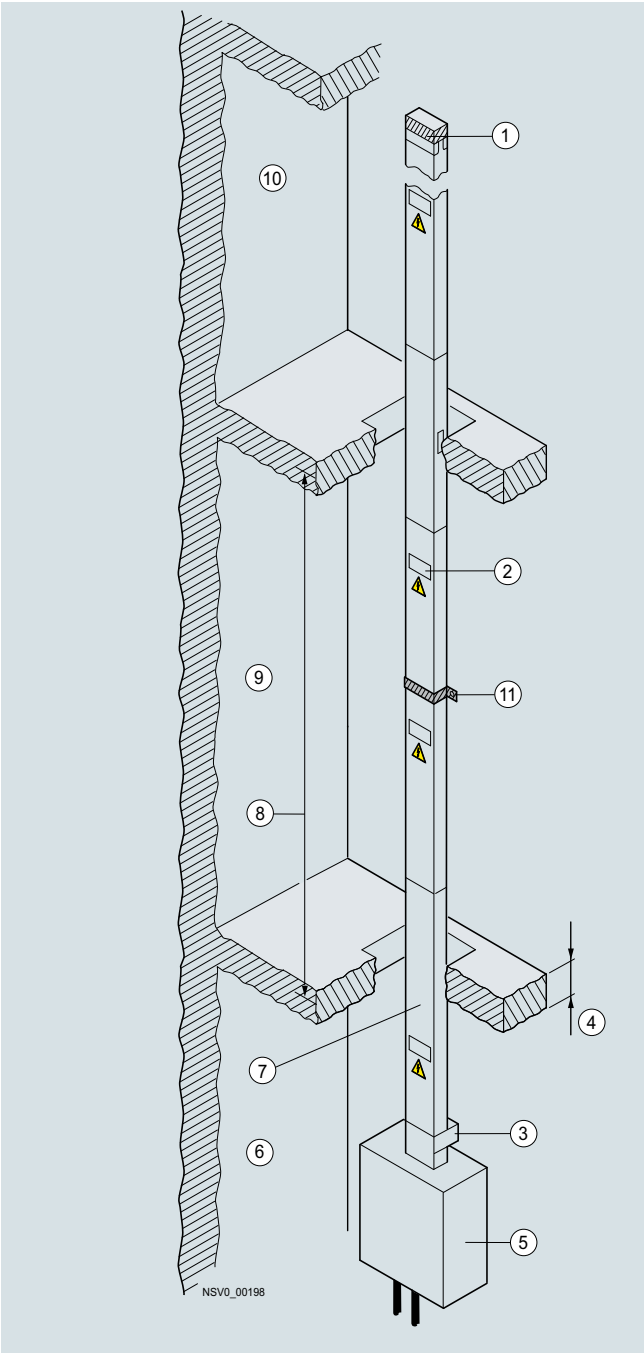

① End flange, termination
② Tap-off point
③ Fixing element for vertical fixing BD2-BWV
④ Ceiling thickness
⑤ End feeding unit
⑥ 1st floor
⑦ Center of fire barrier
⑧ Floor height from center of one ceiling to the center of the next
⑨ 2nd floor
⑩ 3rd floor
⑪ Fixing with BD2-BB and spacer bracket BD2-DSB

Tap-off units

For the tap-off units in the vertical run, the mounting position is stipulated. The outgoing cable must be connected from the bottom. This is the case, when the PE conductor is on the right-hand side viewed from the front.

Vertical fixing

Vertical fixing brackets in the stipulated maximum interval (see table) must be used. The vertical brackets are fitted at the flange of the joint block. Fixtures in between are realized with the spacer bracket combined with the BD2-BB fixing bracket.

The distance from the wall can be varied:

- Systems up to 400 A:
  - 30 mm minimum
  - 82 mm maximum
- Systems of 630 A and higher:
  - 50 mm minimum
  - 82 mm maximum

Maximum length or height of vertical BD2- ... busbar runs, supported by one vertical fixing element BD2-BWV or BD2-BDV:

Rated operational current	Max. length or height	
	BD2A	BD2C
A	m	m
160	11.3	10.0
250	10.9	9.9
400	7.9	7.2
630	5.8	5.2
800	5.8	4.8
1000	5.3	4.1
1250	--	3.25

Defining the configuration reference dimensions

Straight trunking units, standard lengths, type BD2.-.-...-SB-.

Standard lengths from center of terminal to center of terminal

Example: standard length with tap-off points on both sides, type BD2.-...-SB-3

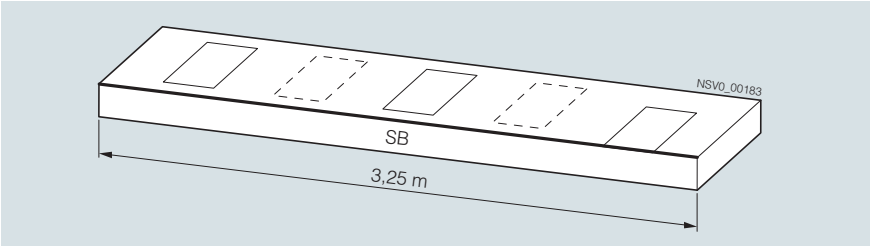

Dimensions in the configuration drawings BD2.-2, BD2.-3, tap-off point distance = 0.5 m

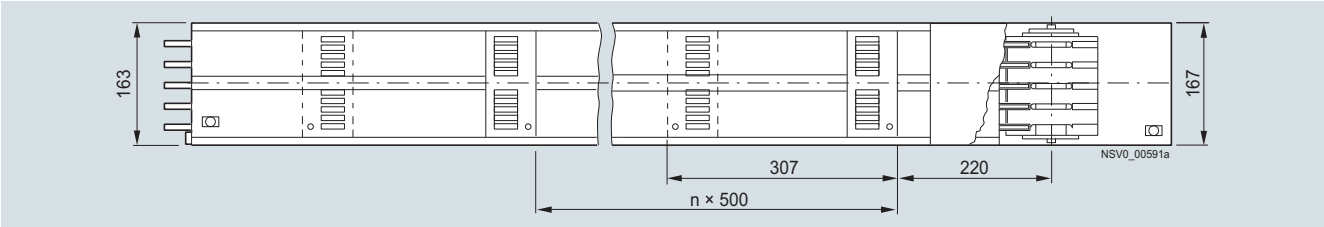

Dimensional drawing

Straight trunking units, optional lengths, type BD2.-.-...-WB-.

Example: BD2.-2, BD2.-3, tap-off point distance = 0.5 m

The open busbar end is used as the reference edge. The grid spacing between the tap-off points is shown in the diagram.

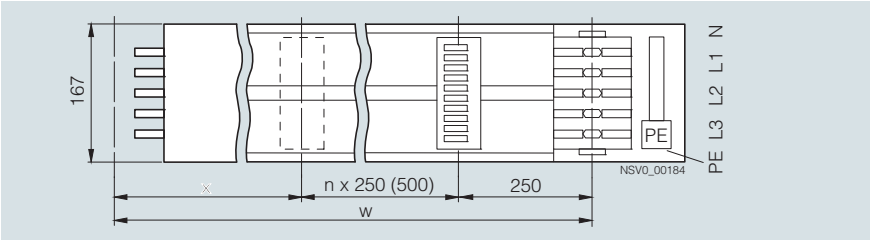

Length m	Tap-off units on both sides Number
0.5 ... 1.24	--
1.25 ... 2.25	4 ... 8
2.26 ... 3.25	8 ... 12

On optional lengths, it may not be possible to fit tap-off units to all tap-off points.

Distance x is the distance between the center of the terminal at the open end and the next tap-off point on the trunking unit. For the standard length, x = 250 mm. For optional lengths, 260 mm ≤ x ≤ 490 mm (varies according to optional length w).

Measuring and determining the optional lengths on site

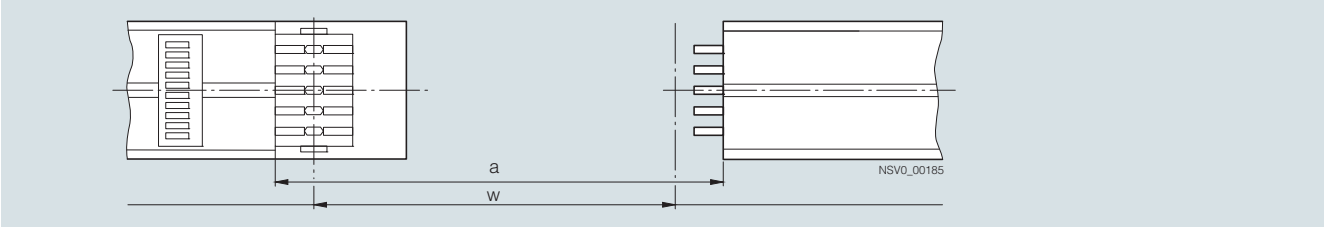

On site, the dimension a between the enclosure edges of the two trunking units to be connected is measured. The optional length is then determined as follows:

$$w[m] = a[m] - 0.14\ m$$

Junction units

X dimension (side with open busbar end): from center of terminal to outside edge of enclosure
Y dimension (side with joint block): from center of terminal to outside edge of enclosure
Z dimension: from outside edge of enclosure to outside edge of enclosure.

For dimensioning data, see page 4/99.

Configuration information

Max. length/height of vertical BD2 busbar runs, supported by one BD2-BWV or BD2-BDV fixing element

BD2A-.-...								
Rated current	A	160	250	400	630	800	1000	1250
Max. supported length or height at max. load (see below)	m	11.3	10.9	7.9	5.8	5.8	5.3	–
Max. weight per 3.25 m trunking unit fitted with tap-off units	kg	50	53	74	106	108	108	–

BD2C-.-...								
Rated current	A	160	250	400	630	800	1000	1250
Max. supported length or height at max. load (see below)	m	10.0	9.9	7.2	5.2	4.8	4.1	3.25
Max. weight per 3.25 m trunking unit fitted with tap-off units	kg	50	53	74	106	108	108	108

Notes

For higher BD2 busbar runs, additional fixing elements must be used.

The maximum load applied to the BD2-BWV and BD2-BDV vertical fixing elements must not exceed 175 kg. They must be fitted in the area of the terminal.

Function

Overload and short-circuit protection

Busbar trunking systems need to be protected against short-circuits and overloads. Fuses and circuit breakers are available for use as protective devices. With the selection of this protection equipment the level of the expected short-circuit currents, selectivity requirements or operating and signaling functions are also factors for consideration.

If circuit breakers are used, the thermally delayed overload release is set to the rated current value for the busbar trunking system. This means that the busbar trunking system can be 100 % loaded.

When you decide on your short-circuit protection using fuses and circuit breakers you must not exceed the specified short-circuit strength of the busbar trunking systems.

It depends on the level of expected short-circuit current whether a current limiting protective device is required and what short-circuit breaking capacity the protective device must have.

The table below contains an overview of the circuit breakers which are suitable for short-circuit and overload protection (400 V and 50 Hz) of the corresponding busbar system and recommended as protection.

The following applies: $I''_k \leq I_{cc} \leq I_{cu}$

with

I''_k = the expected short-circuit current at the site of installation

I_{cc} = rated conditional short-circuit current of the busbar trunking system

I_{cu} = rated short-circuit breaking capacity of the circuit breaker

For 400 V and 50 Hz

Type	Rated current I_e A	CB with standard/ medium switching capacity	Rated conditional short-circuit current I_{cu} kA	CB with medium/ high switching capacity	Rated conditional short-circuit current I_{cu} kA	CB with high/ very high switching capacity	Rated conditional short-circuit current I_{cu} kA
BD2.-160	160	3VA1116-4EF32...	36[1)]	3VA1116-5EF32...	55[1)]	3VA1116-6EF32...	70[1)]
BD2.-250	250	3VA1225-4EF32...	36	3VA1225-5EF32...	55	3VA1225-6EF32...	70
BD2.-400	400	3VA2340-5HL32...	55	3VA2340-6HL32...	85	3VA2340-7HL32...	110
BD2.-630	630	3VA2463-5HL32...	55	3VA2463-6HL32...	85	3VA2463-7HL32...	110
BD2.-800	800	3VA2580-5HL32...	55	3VA2580-6HL32...	85	3VA2580-7HL32...	110[2)]
BD2.-1000	1000	3VA2510-5HL32....	55	3VA2510-6HL32....	85	3VA2510-7HL32....	110
BD2C-1250	1250	On request	...	On request	...	On request	...

1) Rated conditional short-circuit current I_{cc} = 34 kA

2) Rated conditional short-circuit current I_{cc} = 100 kA

The values for the rated conditional short-circuit current I_{cc} apply to the busbar trunking systems without consideration of the tap-off units.

Back-up protection of miniature circuit breakers/fuses

If the maximum short-circuit current of the miniature circuit breaker at the installation location is unknown, or if the specified rated switching capacity is exceeded, an additional protective device must be connected upstream as back-up protection to prevent overloading of the miniature circuit breaker. This is usually a fuse.

The following table shows the short-circuit currents in kA up to which back-up protection is guaranteed when using fuses according to DIN VDE 0636-21.

Back-up protection limit values of miniature circuit breakers/fuses in kA

Downstream miniature circuit breakers		Upstream fuses						
	I_n [A]	50 A	63 A	80 A	100 A	125 A	160 A	>160 A
5SL4								
	0.3 ... 4	No back-up protection required[1]						
	6	50	50	50	50	50	35	30
	8	50	50	50	50	50	35	15
	10	50	50	50	50	50	35	15
	13	50	50	50	35	35	30	15
	16	50	50	50	35	30	30	15
	20	50	50	50	35	25	25	15
	25	50	50	50	35	30	25	15
	32	50	50	50	35	30	25	15
	40	50	50	50	50	25	15	10
	50	50	50	50	50	25	15	10
	63	50	50	35	25	25	15	10
5SL4, 5SL6[2]								
	0.3 ... 6	No back-up protection required[1]						
	8	50	50	50	50	45	45	40
	10	50	50	50	50	45	45	40
	13	50	50	50	45	40	35	30
	16	50	50	50	45	40	35	30
	20	50	50	50	40	35	30	30
	25	50	50	50	40	35	30	30
	32	50	50	50	45	40	30	30
	40	50	50	50	45	40	30	20
	50	50	50	50	40	35	25	20
	63	50	50	45	40	35	25	20

Test circuit data:

U_p = 250 V
cosφ = 0.3 ... 0.5

Test cycle:

Acc. to EN 60947-2 (0 - C0)

1) Up to the respective I_{cu} according to the table "Rated switching capacity", see planning manual "Miniature Circuit Breakers".

2) The values specified for 5SJ4...-.HG.. are not according to UL but are the manufacturer's specifications according to EN 60947-2 and apply for voltage U_e= 230 V ~. For available rated currents, see Catalog LV 10.

Configuration information

Temperature characteristic of BD2 systems

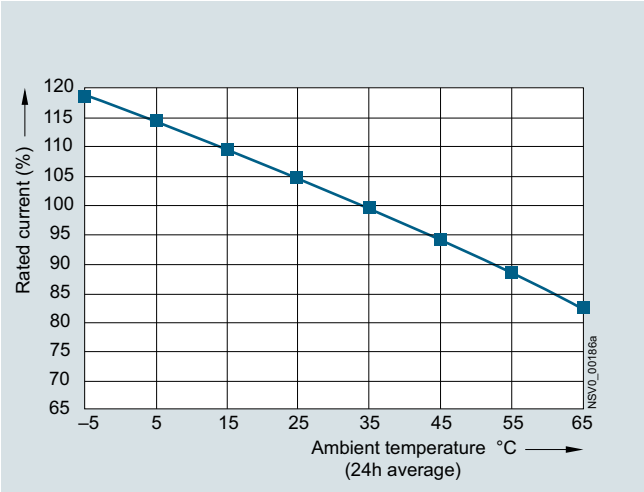

Voltage drop

Voltage drop at rated current

The following diagrams show the voltage drop of the BD2A/BD2C systems

- Taking into account the warm resistances (according to IEC/EN 61439-2)
- With a load distribution factor a = 1
- Under loading with the rated current. (With a different load distribution factor, the curve value must be multiplied by the corresponding distribution factor)

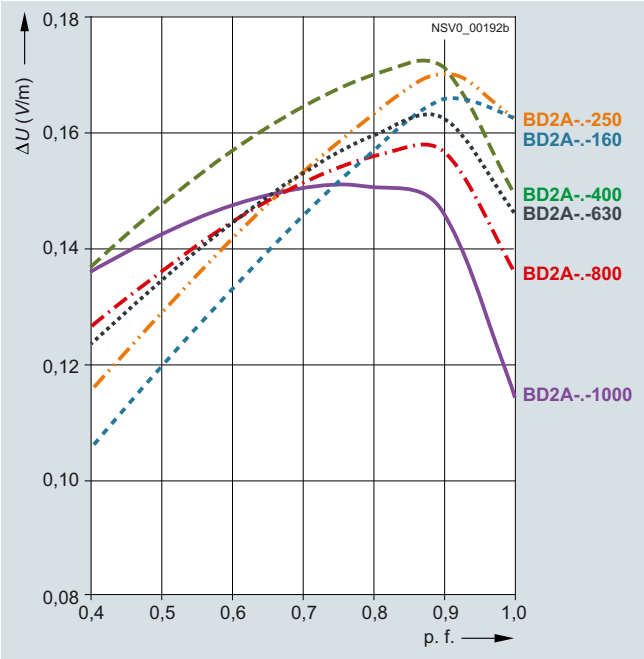

Voltage drop BD2A

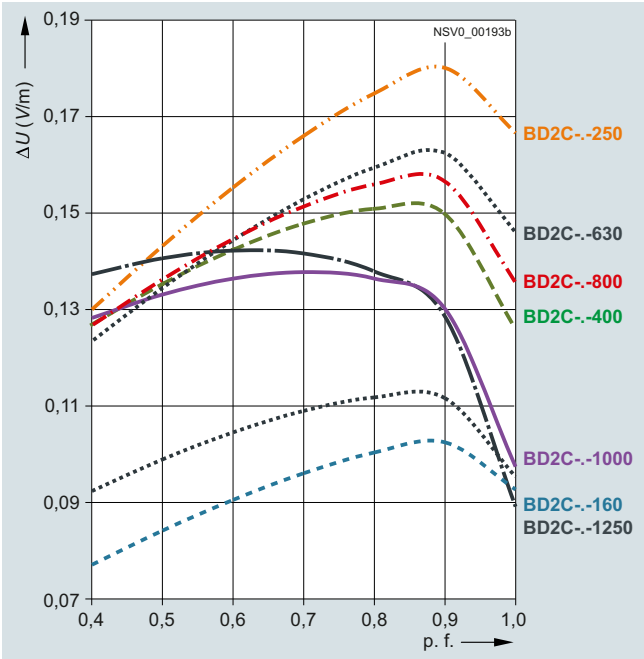

Voltage drop BD2C

Calculation of the voltage drop

For long busbar runs, it may be necessary to calculate the voltage drop.

$$\Delta U = a \times \sqrt{3} \times I \times l \times (R \times \cos\varphi + X \times \sin\varphi) \times 10^{-3} \quad \text{(V)}$$

ΔU	=	Voltage drop	(V)
I	=	Load current	(A)
l	=	Length	(m)
a	=	Load distribution factor	
R	=	Ohmic resistance R_1	(mΩ/m)
X	=	Inductive Resistance X_1	(mΩ/m)
cos φ	=	Power factor (p.f.)	

Factor a used in the equation for calculating the voltage drop is dependent on the load distribution.

Load distribution

Load distribution		Factor *a*
A → B	Infeed at A, one outgoing unit at B	1
A → B C D E	Infeed at A, outgoing units at B, C, D, E	0.5
B A C	Infeed at A, outgoing units at B, C	0.25
B D A E C	Infeed at A, outgoing units at B, C, D, E	0.125
A → ← B; C D E F	Infeed at A, B, outgoing units at C, D, E, F	0.25

Configuration

Configuring example: horizontal mounting position

Required details

The following details are required for configuring BD2 busbar trunking systems (horizontal installation):

- Position, direction, number, type and approximate connected loads, cos φ
- Rated diversity factor α
- Feeding transformers (short-circuit current)
- Nature of the installation site (dimensions, construction of the building, transport paths, cellar, etc.)
- Routing of supply lines from other power sources
- Coordination of lighting system with the BD busbar run
- Crane operation in installation area

Given:

1. Σ of the load power 600 kW, cos φ = 0.8; U_e = 400 V
2. Floor plan and machine layout
3. Rated diversity factor α = 0.6
4. Incoming cable connection 2 × 185 mm^2 from the distribution board
5. Transformer 1 × 500 kVA
6. Single-tier design with steel beam construction
7. Suspension height of 3 m
8. Installed power on machine lines: 200, 182, 118, 100 kW
9. No crane operation
10. Edgewise mounting

Operational current

The operational current is calculated using the following formula:

$$I_B = \frac{P_{inst} \times \alpha \times b}{\sqrt{3} \times U_e \times \cos\varphi} \times 10^3$$

with:

I_B	=	Operational current	(A)
P_{inst}	=	Installed power	(kW)
U_e	=	Rated operational voltage	(V)
cos φ	=	Power factor (p.f.)	
α	=	Rated diversity factor	
b	=	Supply factor	
		b = 1 = Single feeding unit	
		b = ½ = Double end feeding unit, center feeding unit	

If no data are available about the actual currents (derating factor) occurring simultaneously, the following values according to IEC/EN 60439-1 or IEC/EN 61439-1 apply:

Number of main circuits	Rated diversity factor α
2 and 3	0.9
4 and 5	0.8
6 to 9 inclusive	0.7
10 and more	0.6

Determining the operational current

Main busbar run: $I_B = \frac{600 \times 0.6 \times 1}{\sqrt{3} \times 400 \times 0.8} \times 10^3 = 650$ A

Machine line 200 kW: $I_B = \frac{200 \times 0.6 \times 1}{\sqrt{3} \times 400 \times 0.8} \times 10^3 = 217$ A

Machine line 182 kW: $I_B = \frac{182 \times 0.6 \times 1}{\sqrt{3} \times 400 \times 0.8} \times 10^3 = 197$ A

Machine line 118 kW: $I_B = \frac{118 \times 0.6 \times 1}{\sqrt{3} \times 400 \times 0.8} \times 10^3 = 128$ A

Machine line 100 kW: $I_B = \frac{100 \times 0.6 \times 1}{\sqrt{3} \times 400 \times 0.8} \times 10^3 = 108$ A

Installation plan

It contains:

- Position of the busbar trunking system in the building
- Position of the PE and the tap-off openings and consequently the installation direction of the tap-off units
- Number of components with item numbers
- Method and height of suspension

The information assists the installer later.

If the system is correctly assembled, the entire system will have the same sense of rotation as the three-phase motors throughout the entire system. As a result, it will not be necessary to check the direction of rotation of the motors when relocating a machine.

Configuration information

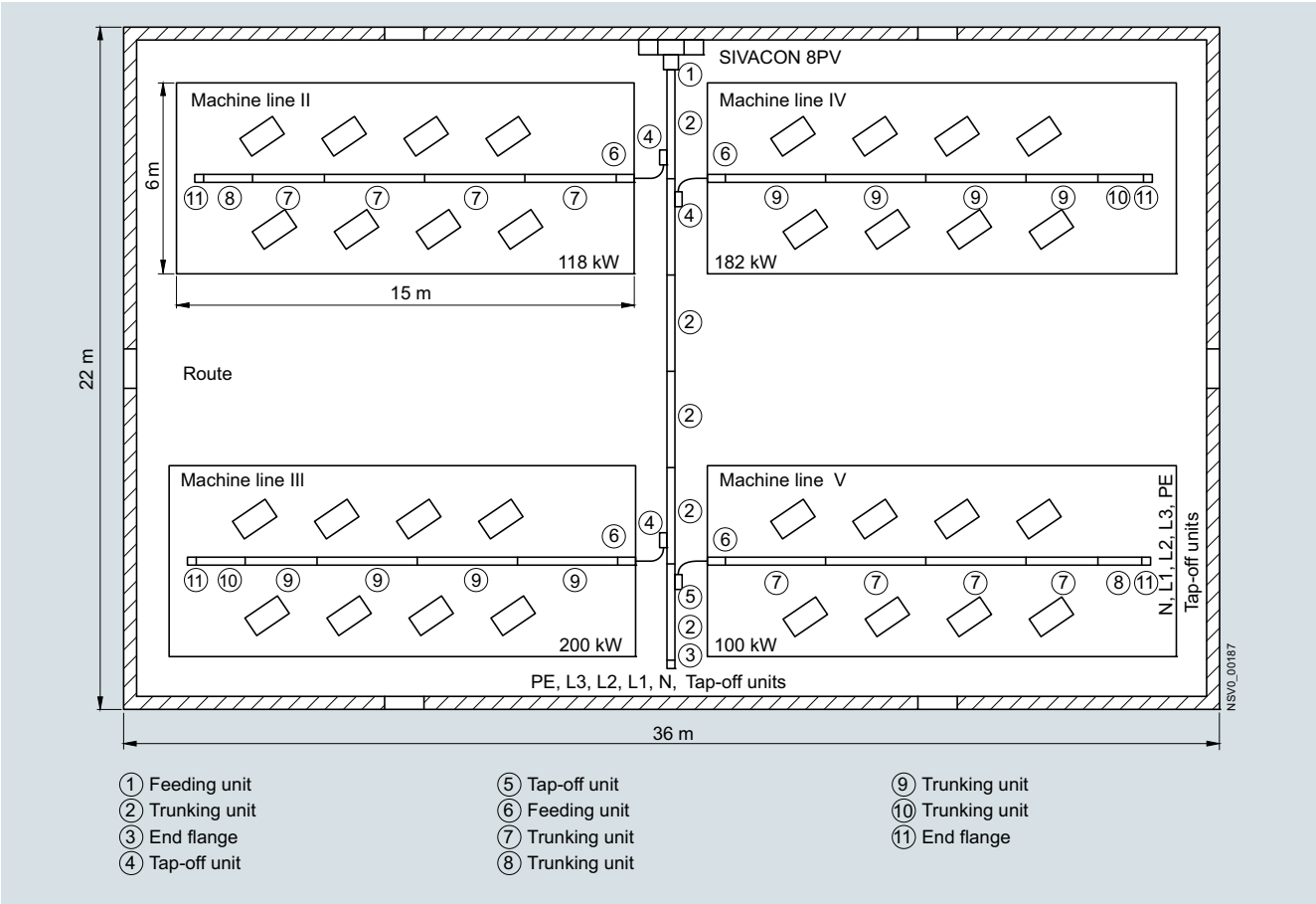

Installation plan

Suspension: at a height of 3 m with ceiling mounted supporting structures. BD2 busbar run I, 800 A, supplies BD2 runs II, III, IV and V via tap-off units and end feeding units, connected by short cable lengths.

Parts list

The parts list should contain all the items shown on the installation plan, with type reference, description and quantity.

Item no. (installation site)	F W L K	Type	Description	Quant.	List price each	Total
1		BD2A-1000-EE	Feeding unit	1		
2		BD2A-2-800-SB-3	Trunking units	6		
3		BD2-1250-FE	End flange	1		
4		BD2-AK04/SNH1	Tap-off units	3		
5		BD2-AK3X/GS00	Tap-off units	1		
6		BD2A-400-EE	Feeding unit	4		
7		BD2A-2-160-SB-3	Trunking units	8		
8		BD2A-2-160-SB-1	Trunking units	2		
9		BD2A-2-250-SB-3	Trunking units	8		
1 0		BD2A-2-250-SB-1	Trunking units	2		
1 1		BD2-400-FE	End flange	4		
1 2		BD2-1250-BB	Fixing brackets	5		
1 3		BD2-400-BB	Fixing brackets	14		

Configuring example: vertical mounting position

Required details

- Number and height of floors
- Connected loads per floor and types of load
- Rated diversity factor α
- Feeding transformers (characteristics, position)
- Special requirements (degree of protection, fire barrier, etc.)

Given:

1. Six floors, with five apartments each
2. 38 kW connected load per apartment
3. U_e = 400 V, cos φ = 0.8
4. Rated diversity factor α = 0.8
5. Simultaneity factor β = 0.45
6. Incoming cable connection 2 × 240 mm^2
7. Protection with 3VL57 80 circuit breaker
8. Details and site plans required for routing the trunking

Operational current

The operational current per floor, which also determines the required rated current of the tap-off units, is calculated using the following formula:

$$I_{NB} = \frac{P_{inst} \times \alpha}{\sqrt{3} \times U_e \times \cos\varphi} \times 10^3$$

with:

I_{NB}	=	Operational current per floor	(A)
P_{inst}	=	Sum of installed power per floor	(kW)
U_e	=	Rated operational voltage	(V)
cos φ	=	Power factor (p.f.)	
α	=	Rated diversity factor If α is not specified, the values from Table 1 can be used. If cos φ is not known, this can be set = 1 for a block of apartments.	

$$I_{NB} = \frac{5 \times 38 \times 0.8}{\sqrt{3} \times 400 \times 0.8} \times 10^3 = 274\ \text{A}$$

The operational current per busbar run is:

$$I_B = I_{NB} \times \beta$$

with

β	=	Simultaneity factor for the total number of loads. Good empirical values for simultaneity factors can be obtained from your local power supply company. They vary from region to region. Average values are indicated in table 2.

Table 1 (according to IEC/EN 61439-1)

Number of main circuits	Rated diversity factor α
2 and 3	0.9
4 and 5	0.8
6 to 9 inclusive	0.7
10 and more	0.6

Table 2: Simultaneity factor

Item	Factor β
Schools, nursery schools	0.6 ... 0.9
Carpenters' and joiners' workshops	0.2 ... 0.7
Restaurants, hotels	0.4 ... 0.7
Butchers	0.5 ... 0.8
Bakeries	0.4 ... 0.8
Laundries	0.5 ... 0.9
Conference halls	0.6 ... 0.8
Small offices	0.5 ... 0.7
Large offices	0.4 ... 0.8
Department stores, supermarkets	0.7 ... 0.9
Metal processing works	0.2 ... 0.3
Car factories	0.2 ... 0.3
Lighting systems for road tunnels	1.0
Building sites	0.2 ... 0.4

Once the system has been selected, in this case BD2A-2-800, the following documents must be completed to place an order:

- Installation plan
- Parts list
- Order from

Parts list

Item no. (installation site)	F W L K	Type	Description	Qty.
1		BD2A-1000-EE	End feeding units	1
2		BD2A-2-800-WB-2W1,50 +BD2-S120-BX1,00-M0,25	Trunking unit with optional length 1.5 m + fire barrier a = 1.0 m, ceiling thickness M = 0.25 m	1
3		BD2A-2-800-SB-2	Trunking unit 2.25 m	5
4		BD2A-2-800-WO-1W1,00 +BD2-S120-BX0,50-M0,25	Trunking unit with optional length 1.0 m + fire barrier a = 0.5 m, ceiling thickness M = 0.25 m	4
5		BD2-1250-FE	End flanges	1
6		BD2-BWV	Vertical fixing elements	4
7		BD2-1250-BB	Fixing brackets	5
8		BD2-BD	Spacer brackets	5
9		BD2-AK05/SNH2	Tap-off unit with LV HRC fuse switch disconnector	6
Alternatively:				
2 ... 4		BD2A-2-800-SB-3 +BD2-S120-BX1,00-M0,25	Trunking unit 3.25 m + fire barrier a = 1.0 m, ceiling thickness M = 0.25 m	5

Configuration information

Installation plan

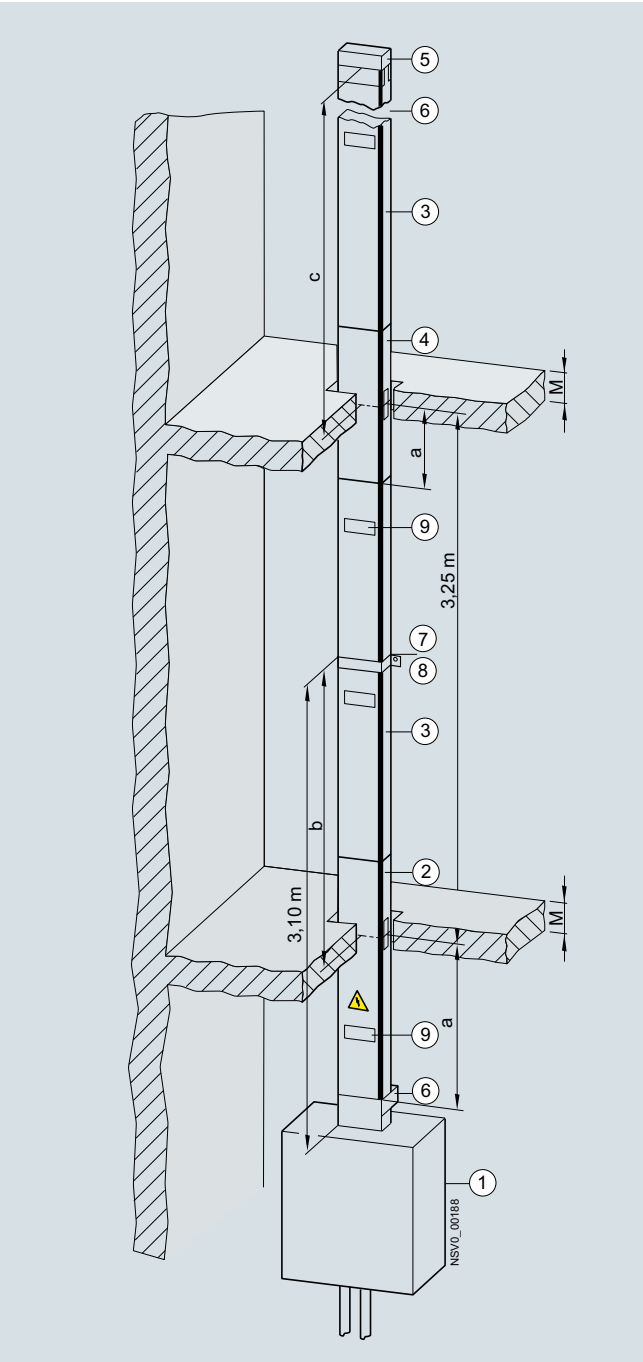

Explanations for the installation plan

① End feeding unit
② Trunking unit, optional length 1.5 m, with fire barrier
③ Trunking unit, standard length 2.25 m
④ Trunking unit, optional length 1.0 m, with fire barrier
⑤ End flange
⑥ Vertical fixing elements
⑦ Fixing bracket
⑧ Spacer bracket
⑨ Tap-off unit

a Position of fire barrier in m;
center of fire barrier is always at center of fire ceiling
b Dimension for spacer bracket in m
c Dimension for fixing element in m
M Ceiling thickness in m

Fixing elements:

- Second fixing element at approx. 5 m height (always near the terminal)
- Third fixing element at approx. 10 m height
- Fourth fixing element at approx. 15 m height

Note

The fixing points for all fixing brackets, fixing elements and spacer brackets must be specified in the installation plan.

More information

Rated currents and short-circuit currents of standard transformers

Rated voltage U_N	400/230 V			690/400 V		
Relative short-circuit voltage u_k		4%[1]	6%[2]		4%[1]	6%[2]
Rated power	Rated current	Short-circuit current I''_k[3]		Rated current	Short-circuit current I''_k[3]	
kVA	A	A	A	A	A	A
50	72	1805	–	42	1042	–
100	144	3610	2406	84	2084	1392
160	230	5776	3850	133	3325	2230
200	288	7220	4812	168	4168	2784
250	360	9025	6015	210	5220	3560
315	455	11375	7583	263	6650	4380
400	578	14450	9630	336	8336	5568
500	722	18050	12030	420	10440	7120
630	909	22750	15166	526	13300	8760
800	1156	28900	19260	672	16672	11136
1000	1444	36100	24060	840	20840	13920
1250	1805	45125	30080	1050	26060	17480

1) u_k = 4%, standardized according to DIN 42500 for S_{NT} = 50 ... 630 kVA.

2) u_k = 6%, standardized according to DIN 42500 for S_{NT} = 100 ... 1600 kVA.

3) I''_k = Transformer initial symmetrical short-circuit current when connecting to a network with unlimited short-circuit power.

Approximating formula		
Transformer rated current	Transformer short-circuit alternating current	with
I_N [A] = $k \times S_{NT}$ [kVA]	$I''_k = I_N/u_k \times 100$	k = 1.45 at 400 V k = 0.84 at 690 V

Dimensioning and selection

Safe breaking of the smallest single-pole ground short-circuit current

Since the level of the loop impedance is decisive in determining the level of the single-pole short-circuit current, DIN VDE 0100 Part 600 prescribes that the loop impedance must be determined between the following:

- Phase conductor and the protective conductor or
- Phase conductor and PEN conductor

This value may be determined by:

- Measuring with measuring devices or
- Calculation or
- Simulation of the network in a network model

In the "Technical Specifications" section, the impedance values for the BD2A/BD2C busbar trunking systems are listed so that it is possible to calculate the loop impedances of a busbar system, which contributes to the total loop impedance.

With the aid of the loop impedance of the entire busbar trunking system, it is easy to calculate the smallest expected single-pole short-circuit current.

$$I_{kl\,min} = \frac{c \times U_n}{\sqrt{3} \times Z_k}$$

with

c = Voltage factor 0.95

U_n = Voltage between the phase conductors

Z_k = Short-circuit impedance

Configuration information

Degrees of protection for busbar trunking systems

Room types according to DIN VDE 0100 (IEC 60364)	Designation of the degree of protection according to IEC/EN 60529
Closed electrical operating areas	IP10
Electrical operating areas	IP20
Dry areas and rooms	IP20
Damp and wet areas and rooms	IP20

Usage in operating areas exposed to a fire hazard

In operating areas exposed to a fire hazard, IEC 60364-7-72 and DIN VDE 0100-720 place enhanced demands on the degree of protection of electrical equipment. The demands for busbar trunking systems are:

- For a fire hazard from dust and/or fibers: degree of protection IP5X
- For a fire hazard from readily flammable materials apart from dust and/or fibers: degree of protection IP4X

The BD2A/BD2C busbar trunking systems meet these demands. They are therefore suitable for applications in this area.

Degrees of protection of electrical equipment according to IEC/EN 60529

Degree of protection	1st characteristic numeral		2nd characteristic numeral
	Touch protection	Protection against solid foreign bodies and dust	Protection against ingress of liquid
IP00	No special protection	No special protection	No special protection
IP20	Against finger contact	Against solid particles ≥ ∅ 12.5 mm	No special protection
IP34	Against tools	Against solid particles ≥ ∅ 2.5 mm	No damage caused by splashwater
IP41	Against wire	Against solid particles ≥ ∅ 1 mm	No damage caused by vertically dripping water (vertical drops)
IP43	Against wire	Against solid particles ≥ ∅ 1 mm	No damage caused by spraywater
IP54	Against wire	Against hazardous dust deposits inside (dust-tight)	No damage caused by splashwater
IP55	Against wire	Against hazardous dust deposits inside (dust-tight)	No damage caused by hose-water
IP65	Against wire	Against penetration of dust (dust-tight)	No damage caused by hose-water
IP66	Against wire	Against penetration of dust (dust-tight)	In the event of temporary immersion, ingress of water will have no harmful effects (water jet)
IP67	Against wire	Against penetration of dust (dust-tight)	Water may not ingress in harmful quantities during immersion (temporary immersion)
IP68	Against wire	Against penetration of dust (dust-tight)	Water may not ingress in harmful quantities during immersion for indefinite periods (continuous immersion)

Touch protection according to EN 50274

These regulations apply for the design of electrical equipment and its arrangement in electrical installations with rated voltages up to 1000 V AC or 1500 V DC – regarding protection against direct contact, where there are actuators (pushbuttons, toggle levers, etc.) located in the direct vicinity of touch-critical parts.

"Finger-safe" relates only to the operating device (actuator) and only in the normal direction of actuation. A distance of at least r = 30 mm in radius from the center point of the actuator to any touch-critical parts must be ensured.

The degree of protection IP20 is a more enhanced protection against direct contact than "finger-safe". It constitutes touch protection with electrical equipment from all directions. Devices with "finger-safe" protection against direct contact and degree of protection IP00 can be assigned with additional protection against direct contact by shrouding if required.

Power distribution systems (network configurations) according to IEC 60364-3 or DIN VDE 0100-300

Determination of the protective measures and selection of the electrical equipment in accordance with the power distribution system used.

TN systems

TN-S system

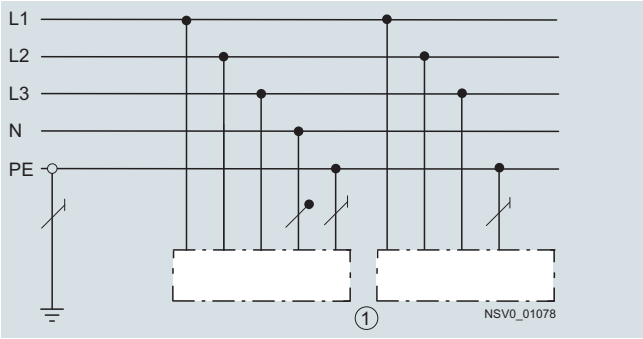

Separate neutral and protective conductor functions throughout the system.

TN-C system

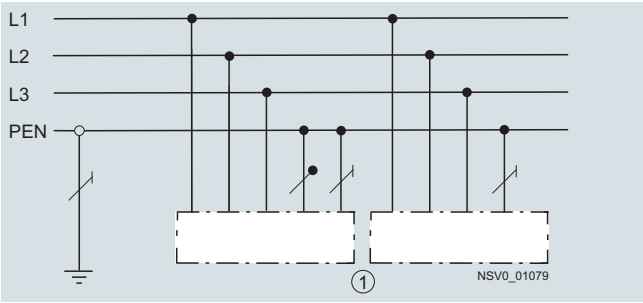

Combined neutral and PE conductor functions throughout the system

TN-C-S system

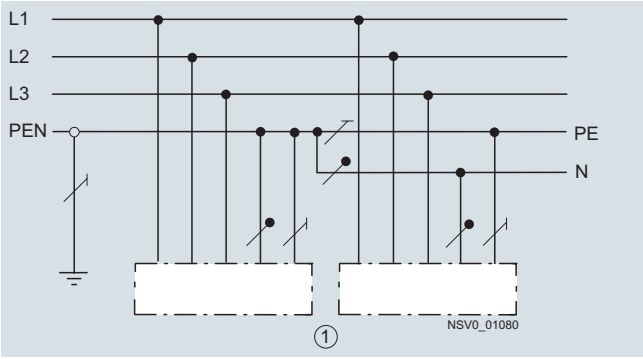

Combination of neutral conductor and PE conductor functions. They are combined in one part of the system to a single conductor and separated in another part.

① Chassis

② Impedance

Other systems

TT system

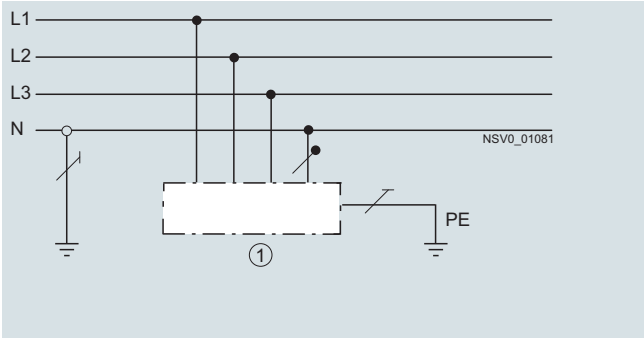

In a TT system, one point is directly grounded; the chassis of the electrical system is connected to ground which has no direct connection to the operational grounding.

In the modern TT system, protective measures include protective grounding as well as residual current operated circuit breaker systems and voltage operated circuit breaker systems.

IT system

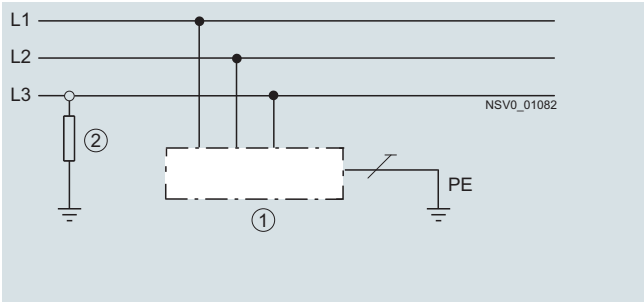

In the IT system there is no direct connection between the live conductors and grounded components; the chassis of the electrical system is grounded.

The IT system corresponds with the system where a protective ground system for protective measures is applied.

Explanations

First character = Grounding condition of the power supply source

- T = Direct grounding of a point
- I = Either insulation of all live parts from ground or connection of one point to ground via impedance

Second character = Grounding condition of chassis of the electrical equipment

- T = Chassis directly grounded, independently of any grounding of a point in the power supply
- N = Chassis connected directly with the operational ground; in AC systems, the grounded point is normally the neutral point

Additional characters = Arrangement of the neutral conductor and PE conductor

- S = Neutral and PE functions in separate conductors
- C = Neutral and PE functions combined in a single conductor (PEN)

Configuration information

Functional endurance

Fire barrier equipment and fire barrier precautions for electrical installations are required especially with building structures of a particular type of utilization. Buildings of this nature include hospitals and places where people gather. The German standards DIN VDE 0108-1 "Power installations and safety power supply in communal facilities" and DIN VDE 0100-710 "Medical locations" state that electrical systems must remain operational for certain periods of time in the event of a fire. This applies in particular to:

- Fire alarm systems
- Systems for sounding alarms and conveying instructions to visitors and employees
- Emergency lighting
- Passenger elevators with evacuation circuit which must remain serviceable in the incoming feeder area for at least 30 minutes under post-flashover fire conditions
- Water-pressure boosting equipment for firefighting water supply
- Ventilation systems of enclosed stairwells, elevator shafts and drive equipment rooms for fire service elevators must remain operational for at least 90 minutes

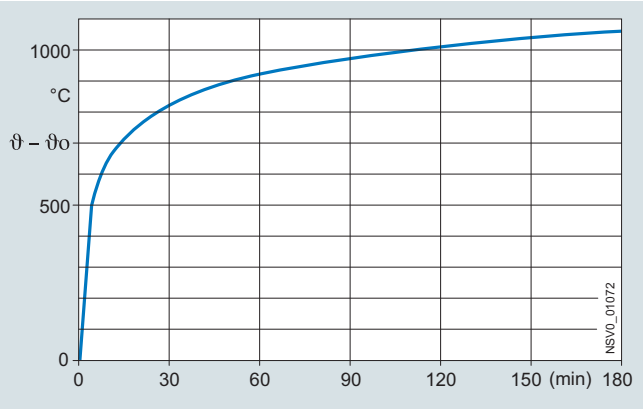

Standard temperature curve (STC) for assessing functional endurance

In order to provide the functional endurance of the busbar trunking system stipulated by the regulations, Siemens successfully carried out and completed tests in cooperation with Promat for the BD2A/BD2C busbar trunking systems at the Materials Testing Institute in Braunschweig in Germany.

In the fire test, the busbar trunking systems concerned were tested with a cladding of Promatect L500 plates in various thicknesses (thickness d = 20 mm, 40 mm, 60 mm) under an outside fire load based on the standard temperature curve (STC)" in order to assess functional endurance according to DIN 4102 Part 12.

More information on request.

Magnetic fields

General information

The busbars intended for power distribution and power transmission generate – as do all other conductors – alternating electromagnetic fields with a fundamental frequency of 50 Hz. These magnetic fields can negatively influence the function of sensitive equipment such as computers or measurement devices.

Limit values

The EMC directives and the standards derived from these do not contain any regulations or recommendations for engineering busbar trunking system installations. If busbar trunking systems are used in medical facilities, the DIN VDE 0100-710 standard can be consulted.

In DIN VDE 0100-710, guide values of mains frequency induced magnetic fields in facilities used for medical purposes are defined. Stations where patients are treated may not be subject to magnetic induction at 50 Hz which exceeds the following values:

- $B = 2 \times 10^{-7}$ Tesla for EEG
- $B = 4 \times 10^{-7}$ Tesla for ECG

In order to make it possible to decide in the planning stage which busbars should be used, Siemens has carried out extensive magnetic field measurements. The magnetic radiated disturbance of the busbar trunking systems was measured using a 9.6 m long straight busbar arrangement. The busbars were loaded symmetrically with the rated current and the magnetic fields measured in their horizontal and vertical axes.

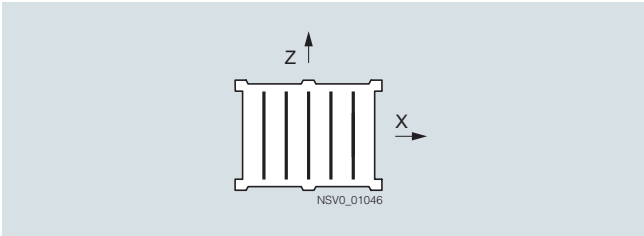

System of coordinates for magnetic field measurement

The limit value for inductive disturbances between multi-core cables and wires of the power installation, conductor cross-section > 185 mm^2, and the patient spaces to be protected is reliably undershot if the minimum distance of 9 m recommended by DIN VDE 0100-710 is observed.

When busbars are used, this distance will usually turn out to be less since the sheet-steel enclosure is effective in reducing magnetic interference fields in the environment.

Measured values on request.

Sprinkler test

General information

Sprinkler fire-extinguishing systems in particular are used for protecting cable conduits and cable ducts. Here it is predominantly the cooling effect of the water on the surface of the fire which is exploited. Operation of the sprinkler for at least 30 minutes should be assumed.

Siemens has subjected its BD2A/BD2C busbar trunking systems to an extensive range of tests with sprinkler systems. Due to the absence of a mandatory standard, the tests were performed using a test setup which mirrored a practical application (see the sketch).

The sprinkler head is 500 mm above and 500 mm laterally offset to the busbar system.

Test results

With the BD2A/BD2C busbar trunking system, the system with degree of protection IP54 was sprinkled in all mounting positions paying close consideration to the "VdS" directives for sprinkler systems. The insulation resistance was measured before and after sprinkling for 90 minutes, and a high voltage test according to EN 61439-6 was performed. This test was absolved successfully and indicated that the system could be operated immediately after sprinkling without any delays.

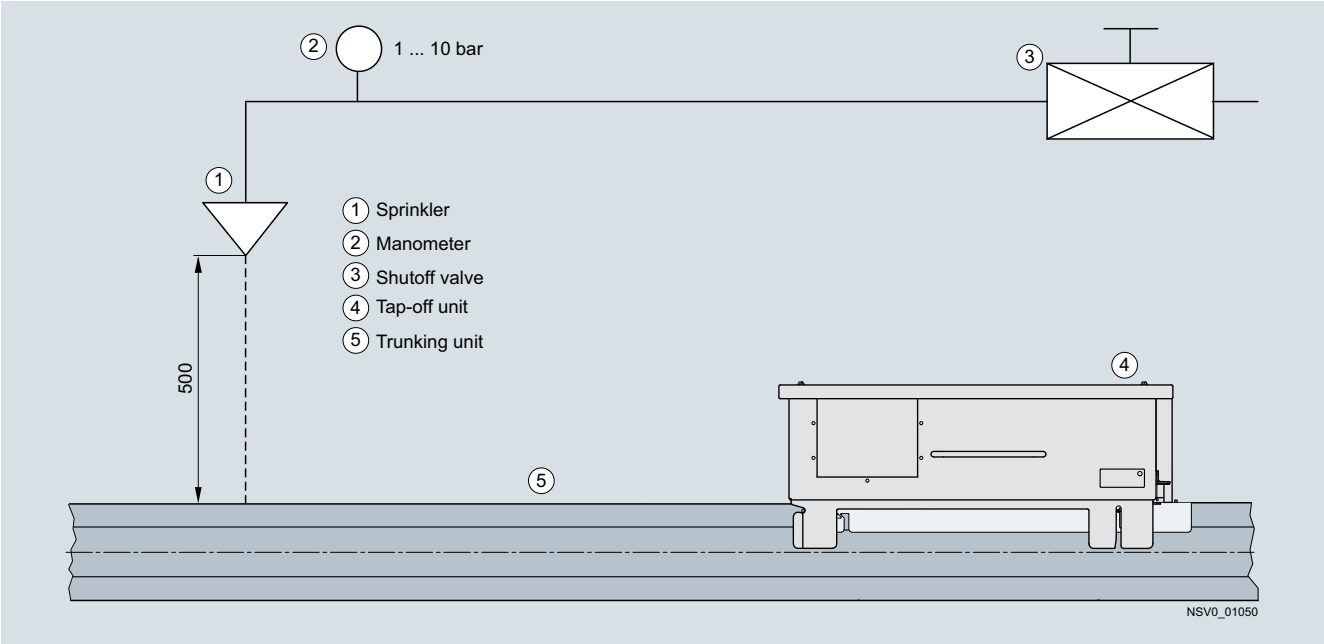

Sprinkler test setup

Configuration information

Comparison of busbar trunking and cable installation systems

Feature	Busbar trunking system	Cable installation
TTA assembly	Yes	No
Mechanical safety	High	Low
Fire load	Low	High
Temperature characteristic	Ambient temperature according to IEC/EN 61439-1/-6 max. +40 °C and +35 °C in the 24-hour average	Cable loads are related to +30 °C in accordance with DIN 57298 Part 4/VDE 0298 Part 4/2.88
Network structure	Clearly structured thanks to a linear network configuration with serially arranged load tap-offs via tap-off units	Very large accumulation of cables at feed point due to point-to-point supply of loads from central power distribution unit
Protective devices for loads	In the tap-off unit: Means direct and immediate on-the-spot identification of assignment to load	Centrally in the distribution board: Makes the assignment to the load not directly verifiable. It is necessary to rely on correct inscription of the cables and loads.
Space requirement	Low	High, because correspondingly large distribution boards are required. Routing criteria (cable accumulation, type of routing, current carrying capacity, etc.) must be complied with.
Retrofitting capability if load tap-offs are changed	Great flexibility due to tap-off points in the trunking units and a great number of different tap-off units	Only possible at great expense; laying additional cables from the central distribution board to the load.
Planning and configuration	Simple and fast with EDP-aided planning tools being used	Highly intensive engineering (distribution and cable layouts, cable plans, etc.)
Dimensioning (current, voltage drop, protective earth conditions)	Not complex	Very complex
Troubleshooting	Low	High
Fire barrier	Type-tested, ex-works	Dependent on the work standard applied on the building site
Functional endurance	Tested functional endurance according to DIN 4102-12	Dependent on the work standard applied on the building site
Electromagnetic interference	Low, due to sheet-steel enclosure and conductor configuration	Relatively high with a standard cable
Mounting	Very little fitting materials and tools required, short mounting times	Complex mounting materials and a comprehensive range of tools required, long mounting times
Weight	Up to 1/3 of the comparable cable weight	Up to 3-times the busbar trunking system weight
Halogen and PVC-free	Trunking units are always halogen and PVC-free	Standard cables are not always halogen and PVC-free

Overview

General requirements[1)]

The German state building authorities demand that buildings are designed so that "spreading of fire and smoke is prevented, and that effective fire fighting and rescue of persons and domestic animals is facilitated". Fire or flue gas may not spread from one floor or fire area to another.

All BD2A/BD2C busbar trunking systems can be equipped with fire barriers and generally comply with the standards for buildings including high-rise buildings. The busbar trunking system is supplied ex-works with fire barriers. Retrofitting is not possible. A general approval from the German Institute for Building Engineering (Deutsches Institut für Bautechnik in Berlin DIBt) in Berlin is available:

- BD2-S120: No. Z-19.15-1046,
- BD2-S90: No. Z-19.15-1048.

The fire resistance class corresponds to S 90 or S 120 according to DIN 4102 Part 9. The demands for verification of the fire resistance duration of 120 minutes according to ISO 834 as required by IEC/EN 60439-2 are fulfilled. The requirements for a busbar trunking system based on DIN 4102 are shown in the illustration.

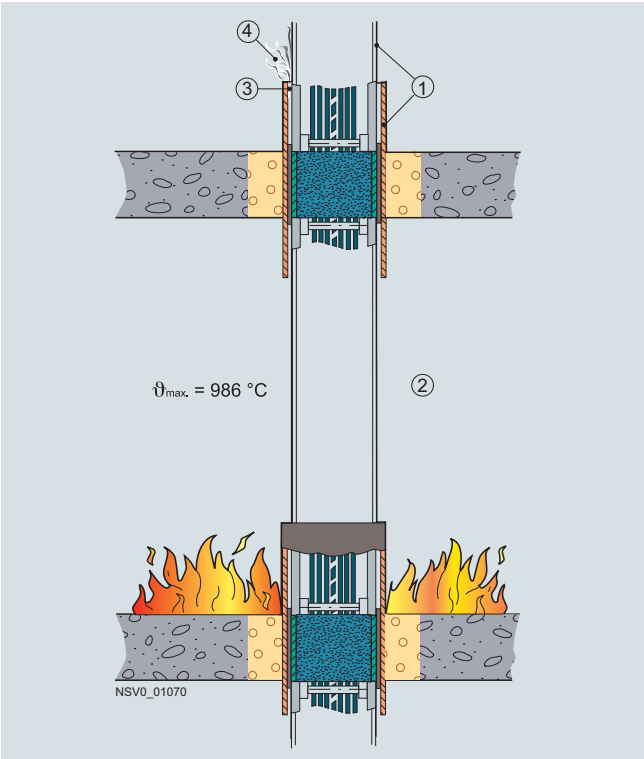

(1) Permissible temperature increase on building elements: max. 180 °C

(2) Scene of fire: Application of fire according to the standard temperature curve DIN 4102, Sheet 2

(3) Permitted temperature increase of escaping air: max. 140 °C

(4) No flammable gases are permitted to escape. No rescue work may be hindered by emerging smoke.

Configuration

To ensure fire barrier to EI 90 or EI 120, the following points must be observed when engineering and installing trunking and junction units with fire barriers:

[1)] Fire barrier: Fire resistance class EI 90 and EI 120 according to EN 1366-3 and approval papers for European standard available soon

- The center of the fire barrier in the trunking unit must be positioned in the center of the fire wall or ceiling.
  Exception: With junction units, this may not be possible due to insufficient distance from the wall or ceiling, i.e. the center of the fire barrier may not coincide with the center of the fire wall or ceiling. In such cases, PROMATECT-H(L) plates are added to achieve the actually required wall or ceiling thickness.
- The following information must be provided: For BX*, BY* or BZ* trunking units, position of the center of the fire barrier in the trunking unit (or the center of the fire wall or ceiling for junction units with insufficient distance from the wall or ceiling); the desired fire resistance class S 90 or S 120; and the thickness M* of the wall or ceiling.
- There are no tap-off points in the area covered by the fire barrier
- The trunking units must be installed by an approved fire barrier installation specialist
- In Germany, the BD2-S90-ZUL-D or BD2-S120-ZUL-D fire barrier approval kit is required (see page 4/62).

Notes

For BX* and BY*, replace the asterisk in the type reference by the required dimension in meters from the center of the joint block to the center of the fire wall or ceiling; for -M* specify the wall or ceiling thickness.

For BZ*, replace the asterisk in the type reference by the required dimension in meters from the outside edge of X dimension (end without joint block) to the center of the fire wall or ceiling; for -M* specify the wall or ceiling thickness.

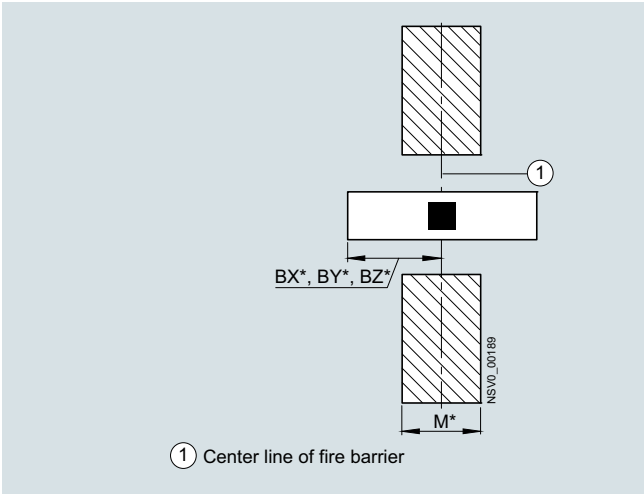

Positioning in the fire wall

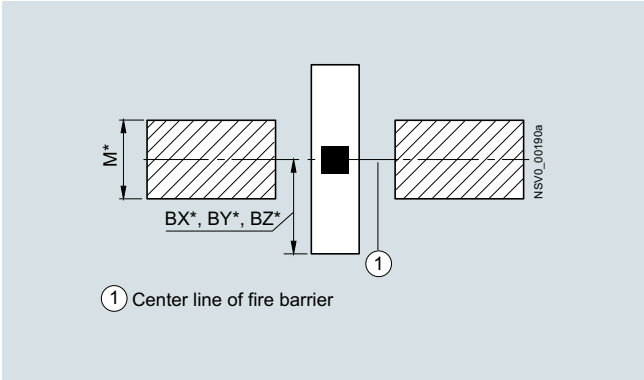

Positioning in the fire ceiling

Design

Position of fire barrier on the trunking unit

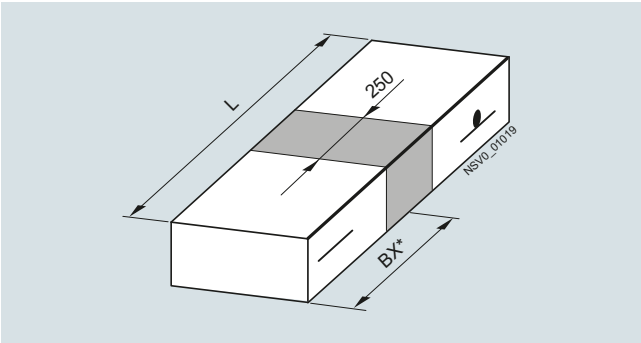

Type: BD2A-...-S(W).-. + BD2-S90 (S120)-BX*-M*
BD2C-...-S(W).-. + BD2-S120-BX*-M*

Fire resistance class S 90 / S 120

• Wall thickness 150 mm ≤ M < 350 mm

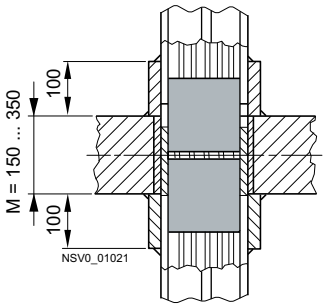

BD2A-...-S(W). + BD2-S90 (S120)-BX*-M* [1)]

L (L min. = 570+M)	BX* min. = 285+M/2	BX* max. = L–BX* min.
720 (min.)	360	360
–	–	–
–	–	–
3250 (max.)	360	2890

• Wall thickness M ≥ 350 mm

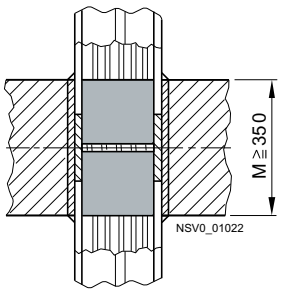

BD2A-...-S(W). + BD2-S90 (S120)-BX*-M* [1)]

L (L min. = 370+M)	BX* min. = 185+M/2	BX* max. = L–BX* min.
720 (min.)	360	360
–	–	–
–	–	–
3250 (max.)	360	2890

Fire resistance class S 120

• Wall thickness M ≥ 150 mm

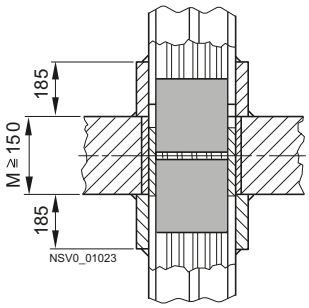

BD2C-...-S(W). + BD2-S120-BX*-M* [1)]

L (L min. = 740+M)	BX* min. = 370+M/2	BX* max. = L–BX* min.
900 (min.)	450	450
–	–	–
–	–	–
3250 (max.)	450	2800

[1)] Replace the asterisk * according to the table.

Position of the fire barrier on junction units

The minimum dimensions applicable for positioning fire barriers on the dimensions of junction units differ, depending on the routing of the trunking and the distance from the fire wall to the inside edge of the trunking unit.

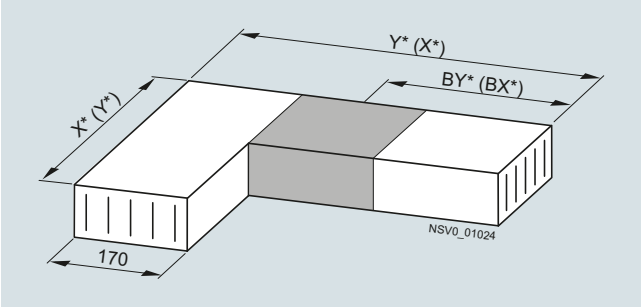

Elbow, type: BD2A-...-LR(L)-X* (Y*), +BD2-S90(S120)-BX*(BY*)-M*
BD2C-...-LR(L)-X* (Y*), +BD2-S120-BX*(BY*)-M*

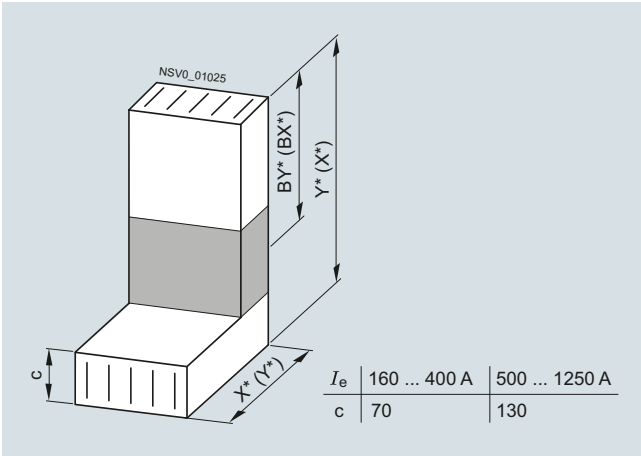

I_e	160 ... 400 A	500 ... 1250 A
c	70	130

Knee, type: BD2A-...-LV(H)-X* (Y*), +BD2-S90(S120)-BX*(BY*)-M*
BD2C-...-LV(H)-X* (Y*), +BD2-S120-BX*(BY*)-M*

Fire resistance class S 90 / S 120

- Wall thickness 150 mm ≤ M < 350 mm
  (distance from wall/inside corner A ≥ 200 mm)

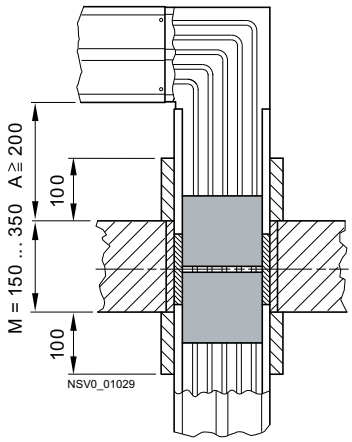

BD2A-...-L... + BD2-S90 (S120)-BX*(BY*)-M* [1]

- Junction units LL, LR

X*(Y*)(X*(Y*) min. = 285+M+A+170)	BX*(BY*) min. = 285+M/2	BX*(BY*) max. = X*(Y*)-170-A-M/2
810 (min.)	360	360
–	–	–
1250 (max.)	360	800

- Junction units LV, LH; 400 A

X*(Y*)(X*(Y*) min. = 285+M+A+70)	BX*(BY*) min. = 285+M/2	BX*(BY*) max. = X*(Y*)-70-A-M/2
710 (min.)	360	360
–	–	–
1250 (max.)	360	900

- Junction units LV, LH; 1000 A

X*(Y*)(X*(Y*) min. = 285+M+A+130)	BX*(BY*) min. = 285+M/2	BX*(BY*) max. = X*(Y*)-130-A-M/2
770 (min.)	360	360
–	–	–
1250 (max.)	360	840

Fire resistance class S 90 / S 120

- Wall thickness M ≥ 350 mm
  (distance from wall/inside corner ≥ 200 mm)

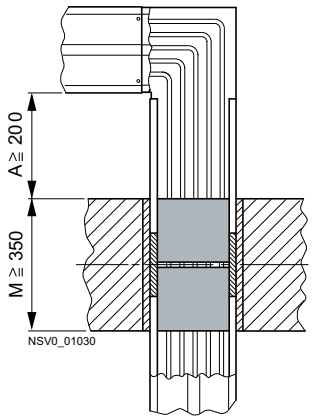

BD2A-...-L... + BD2-S90 (S120)-BX*(BY*)-M* [1]

- Junction units LL, LR

X*(Y*)(X*(Y*) min. = 185+M+A+170)	BX*(BY*) min. = 185+M/2	BX*(BY*) max. = X*(Y*)-170-A-M/2
910 (min.)	360	360
–	–	–
1250 (max.)	360	700

- Junction units LV, LH; 400 A

X*(Y*)(X*(Y*) min. = 185+M+A+70)	BX*(BY*) min. = 185+M/2	BX*(BY*) max. = X*(Y*)-70-A-M/2
810 (min.)	360	360
–	–	–
1250 (max.)	360	800

- Junction units LV, LH; 1000 A

X*(Y*)(X*(Y*) min. = 185+M+A+130)	BX*(BY*) min. = 185+M/2	BX*(BY*) max. = X*(Y*)-130-A-M/2
870 (min.)	360	360
–	–	–
1250 (max.)	360	740

[1] Replace the asterisk * according to the table.

Note: With other fire barrier configurations, please contact your local Siemens sales office.

Fire resistance class S 90 / S 120

- Wall thickness 150 mm ≤ M < 350 mm
  (distance from wall/inside corner 30 mm ≤ A < 200 mm)

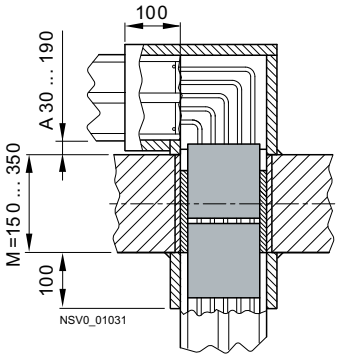

BD2A-...-L... + BD2-S90 (S120)-BX*(BY*)-M* [1]

- Junction units LL, LR

X*(Y*)(X*(Y*) min. = 285+M+A+170)	BX*(BY*) min. = 285+M/2	BX*(BY*) max. = X*(Y*)-170-A-M/2
640 (min.)	360	360
–	–	–
1250 (max.)	360	970

- Junction units LV, LH; 400 A

X*(Y*)(X*(Y*) min. = 285+M+A+70)	BX*(BY*) min. = 285+M/2	BX*(BY*) max. = X*(Y*)-70-A-M/2
540 (min.)	360	360
–	–	–
1250 (max.)	360	1070

- Junction units LV, LH; 1000 A

X*(Y*)(X*(Y*) min. = 285+M+A+130)	BX*(BY*) min. = 285+M/2	BX*(BY*) max. = X*(Y*)-130-A-M/2
600 (min.)	360	360
–	–	–
1250 (max.)	360	1010

The dimension X^*_{min} or Y^*_{min} on the side with corner covering is 460 mm.

Fire resistance class S 90 / S 120

- Wall thickness M ≥ 350 mm
  (distance from wall/inside corner 30 mm ≤ A < 200 mm)

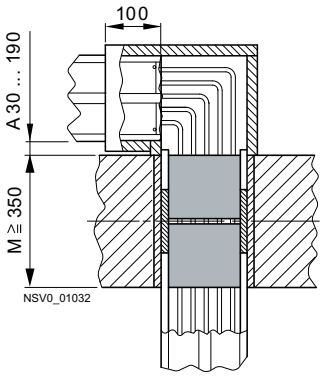

BD2A-...-L... + BD2-S90 (S120)-BX*(BY*)-M* [1]

- Junction units LL, LR

X*(Y*)(X*(Y*) min. = 185+M+A+170)	BX*(BY*) min. = 185+M/2	BX*(BY*) max. = X*(Y*)-170-A-M/2
740 (min.)	360	360
–	–	–
1250 (max.)	360	870

- Junction units LV, LH; 400 A

X*(Y*)(X*(Y*) min. = 185+M+A+70)	BX*(BY*) min. = 185+M/2	BX*(BY*) max. = X*(Y*)-70-A-M/2
640 (min.)	360	360
–	–	–
1250 (max.)	360	970

- Junction units LV, LH; 1000 A

X*(Y*)(X*(Y*) min. = 185+M+A+130)	BX*(BY*) min. = 185+M/2	BX*(BY*) max. = X*(Y*)-130-A-M/2
700 (min.)	360	360
–	–	–
1250 (max.)	360	910

The dimension X^*_{min} or Y^*_{min} on the side with corner covering is 460 mm.

[1] Replace the asterisk * according to the table.

Note: With other fire barrier configurations, please contact your local Siemens sales office.

Fire resistance class S 120

- Wall thickness ≥ 150 mm
  (distance from wall/inside corner ≥ 200 mm)

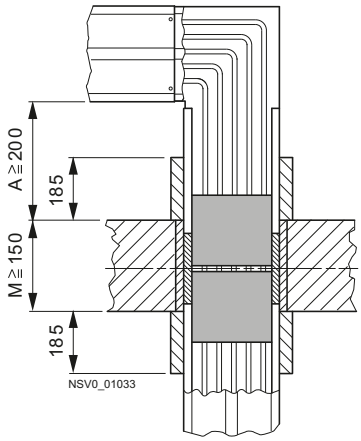

BD2C-...-L... + BD2-S120-BX*(BY*)-M* [1)]

- Junction units LL, LR

X*(Y*)(X*(Y*) min. = 370+M+A+170)	BX*(BY*) min. = 370+M/2	BX*(BY*) max. = X*(Y*)-170-A-M/2
890 (min.)	450	450
–	–	–
1250 (max.)	450	800

- Junction units LV, LH; 400 A

X*(Y*)(X*(Y*) min. = 370+M+A+70)	BX*(BY*) min. = 370+M/2	BX*(BY*) max. = X*(Y*)-70-A-M/2
790 (min.)	450	450
–	–	–
1250 (max.)	450	900

- Junction units LV, LH; 1250 A

X*(Y*)(X*(Y*) min. = 370+M+A+130)	BX*(BY*) min. = 370+M/2	BX*(BY*) max. = X*(Y*)-130-A-M/2
850 (min.)	450	450
–	–	–
1250 (max.)	450	840

Fire resistance class S 120

- Wall thickness M ≥ 150 mm
  (distance from wall/inside corner 30 mm ≤ A < 200 mm)

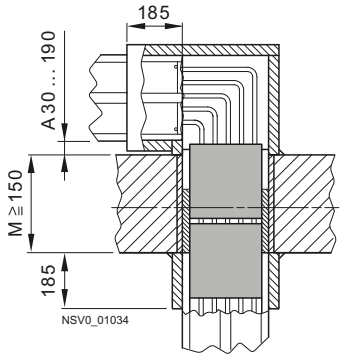

BD2C-...-L... + BD2-S120-BX*(BY*)-M* [1)]

- Junction units LL, LR

X*(Y*)(X*(Y*) min. = 370+M+A+170)	BX*(BY*) min. = 370+M/2	BX*(BY*) max. = X*(Y*)-170-A-M/2
720 (min.)	450	450
–	–	–
1250 (max.)	450	970

- Junction units LV, LH; 400 A

X*(Y*)(X*(Y*) min. = 370+M+A+70)	BX*(BY*) min. = 370+M/2	BX*(BY*) max. = X*(Y*)-70-A-M/2
620 (min.)	450	450
–	–	–
1250 (max.)	450	1070

- Junction units LV, LH; 1250 A

X*(Y*)(X*(Y*) min. = 370+M+A+130)	BX*(BY*) min. = 370+M/2	BX*(BY*) max. = X*(Y*)-130-A-M/2
680 (min.)	450	450
–	–	–
1250 (max.)	450	1010

The dimension X^*_{min} or Y^*_{min} on the side with corner covering is 550 mm.

[1)] Replace the asterisk * according to the table.

Note: With other fire barrier configurations, please contact your local Siemens sales office.

Installing trunking units with fire barrier

Recommended minimum dimensions of ceiling or wall cut-out

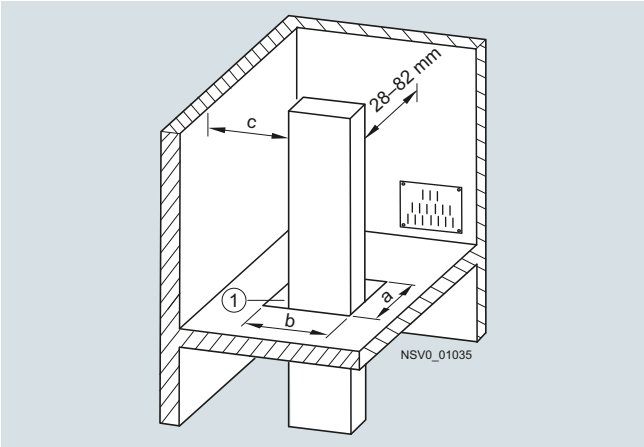

Positioning in the fire ceiling

System current rating up to	a[1] mm	b mm
400 A	90	200
1250 A	150	200

Trunking units with	c mm
Tap-off unit BD2-AK1..., BD2-AK02..., BD2-AK2..., BD2-AK03..., BD2-AK3...	125
Tap-off unit BD2-AK04..., BD2-AK05..., BD2-AK06...	200
BD2-BWV or BD2-BDV (with or without tap-off unit)	200
BD2.-...-EE (with or without tap-off unit)	200

[1] For Z-units depending on the lengths X*, Y*.

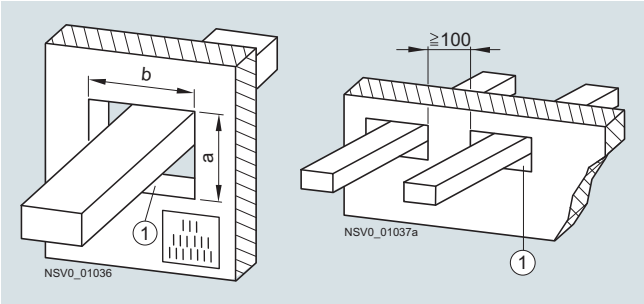

Positioning in the fire wall

Mounting position

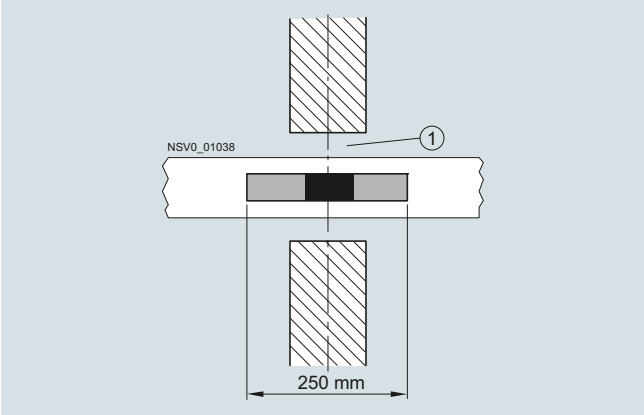

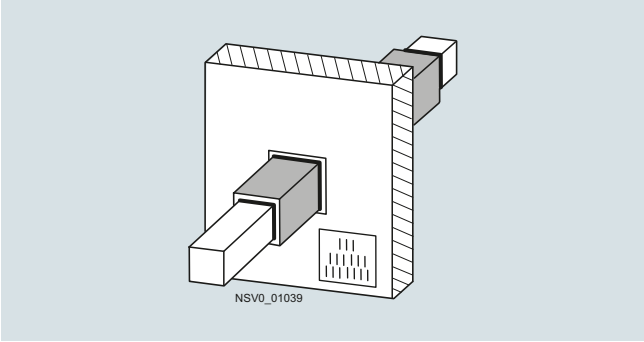

When installing trunking units with fire barrier, the following points must be observed:

- Only one trunking element may be passed through per wall or ceiling opening
- The distance from the wall or ceiling opening to be closed to other openings or components must be at least 20 cm. As an exception to this, the distance between adjacent wall or ceiling openings for barriers can be reduced to up to 10 cm.
- Horizontally mounted busbar runs must be supported by a fixing bracket fitted approx. 500 mm before and after the building element they pass through.
- When installing in a ceiling, the lower fire barrier shroud must be secured
- When changing the direction through a ceiling, the fire barrier shroud must be secured to the bottom of the ceiling by an additional suspension arrangement
- The opening ① between the busbar trunking element and the building element must be filled with mineral-based mortar or fire barrier sealant.
- The gaps between PROMATECT-H(L) plates, the busbar trunking element and the component must be sealed with fire barrier sealant (included in scope of supply if plates are required)
- The mortar or fire barrier sealant must conform to the applicable regulations for establishing the fire resistance class or for constructing the wall or ceiling (e.g. DIN 1045 and DIN 1053 Part 1)
- The mortar or fire barrier sealant must be provided by the customer. It must be installed in compliance with the locally applicable standards and regulations.
- The installation work must be carried out according to the regulations of the general approval of the local building inspectorate (included in scope of supply).

Overview

In the following, a formula is given for calculating the possible maximum DC load for the busbar trunking system. The DC current carrying capacity of busbar trunking systems can only be exactly verified by tests.

$$3 * R * I^2_{ac} = 4 * R * I^2_{dc}$$

In case of short circuit, the power is limited either by the power supply unit, the thyristor or the battery. These short-circuit currents are always clearly below the listed three-phase short-circuit currents of the BD2 system and are therefore not relevant.

It is to be observed that a possible arcing short circuit cannot extinguish by itself, because DC currents do not have a zero crossing.

Depending on the cable length, it has to be verified if the upstream switching and protection device still trips ($I_{cf} > I_{dce}$).

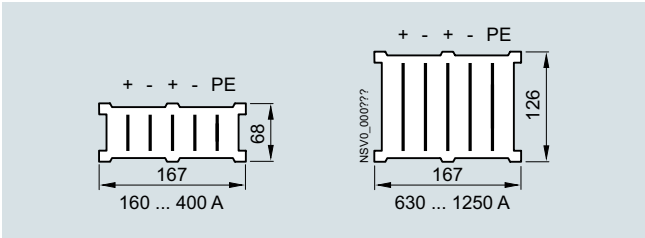

Busbars without tap-off points and junction units are identical for AC and DC (modifications are only provided for feeding units due to phase marking, as well as for tap-off points and units which must be especially coded).

To differentiate between DC busbar trunking systems and AC busbar trunking systems, we therefore recommend to equip the DC busbars with the DC label.

These labels are self-adhesive and do not detach from the system even after a long time as well as with varying current/ heat loads.

Version	SD	Type	Article No.	PS*/ P. unit	Weight per unit approx.
	d				kg
DC label					
		BD2-LABEL-DC	**BVP:662524**		

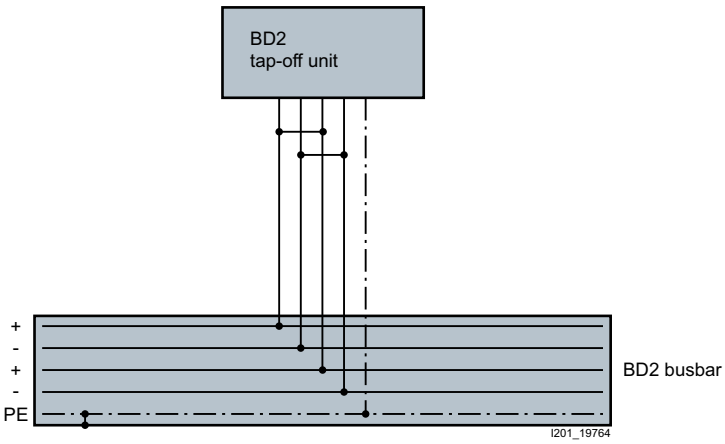

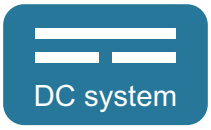

DC label

* You can order this quantity or a multiple thereof.

Selection and ordering data

Version + - + - PE	SD	Rated current I_{nA} 160 A, 250 A		PS*/ P. unit	Weight per unit approx.	SD	Rated current I_{nA} 160 A, 250 A, 400 A		PS*/ P. unit	Weight per unit approx.
	d	Type	Article No.		kg	d	Type	Article No.		kg
Feeding units										
End feeding units without joint block Bolt terminal (bolt included in scope of supply); PE position can be changed Cable entry for multi-core cables from the front 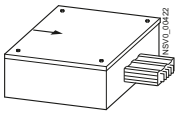										
• Aluminum	X	**BD2A-250-EE-DC**				X	**BD2A-400-EE-DC**			
• Copper	X	**BD2C-250-EE-DC**				X	**BD2C-400-EE-DC**			
With cable entry plate[1] Cable entry for single-core cables from the front 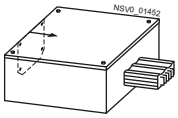										
• Aluminum	X	**BD2A-250-EE-EBAL-DC**				X	**BD2A-400-EE-EBAL-DC**			
• Copper	X	**BD2C-250-EE-EBAL-DC**				X	**BD2C-400-EE-EBAL-DC**			
With cabling box Cable entry for multi-core cables from 2 sides 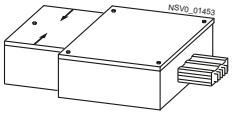										
• Aluminum		–				X	**BD2A-400-EE-KR-DC**			
• Copper		–				X	**BD2C-400-EE-KR-DC**			
With cabling box and cable entry plate[1] Cable entry for multi-core cables from 2 sides 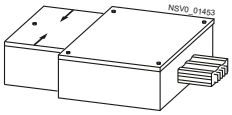										
• Aluminum		–				X	**BD2ADC-400-EE-KR-EBAL**			
• Copper		–				X	**BD2CDC-400-EE-KR-EBAL**			

Accessories for cable entry, see page 4/62

[1] Single-core cable entry plate, undrilled.

For information on DC application, see page 4/94.

4

* You can order this quantity or a multiple thereof.

DC feeding units (on request) NEW

Selection and ordering data

Version + - + - PE	SD	Rated current I_{nA} 630 A, 800 A, 1000 A		PS*/ P. unit	Weight per unit approx.	SD	Rated current I_{nA} 1250 A		PS*/ P. unit	Weight per unit approx.
	d	Type	Article No.		kg	d	Type	Article No.		kg
Feeding units										
End feeding units without joint block Bolt terminal (bolt included in scope of supply); PE position can be changed Cable entry for multi-core cables from the front 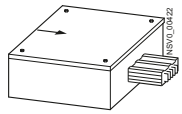										
• Aluminum	X	**BD2A-1000-EE-DC**					**–**			
• Copper	X	**BD2C-1000-EE-DC**				X	**BD2C-1250-EE-DC**			
With cable entry plate[1] Cable entry for single-core cables from the front 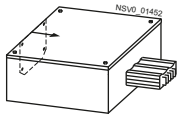										
• Aluminum	X	**BD2A-1000-EE-EBAL-DC**					**–**			
• Copper	X	**BD2C-1000-EE-EBAL-DC**				X	**BD2C-1250-EE-EBAL-DC**			
With cabling box Cable entry for multi-core cables from 2 sides 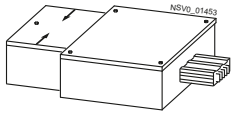										
• Aluminum	X	**BD2A-1000-EE-KR-DC**					**–**			
• Copper	X	**BD2C-1000-EE-KR-DC**				X	**BD2C-400-EE-KR-DC**			
With cabling box and cable entry plate[1] Cable entry for multi-core cables from 2 sides 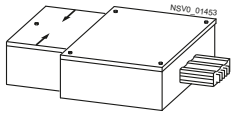										
• Aluminum	X	**BD2A-1000-EEKR-EBAL-DC**					**–**			
• Copper	X	**BD2C-1000-EEKR-EBAL-DC**				X	**BD2C-1250-EE-KR-EBAL-DC**			

Accessories for cable entry, see page 4/62

[1] Single-core cable entry plate, undrilled.

For information on DC application, see page 4/94.

* You can order this quantity or a multiple thereof.

Selection and ordering data

Version + - + - PE	SD	Rated current I_{nA} 160 A, 250 A		PS*/ P. unit	Weight per unit approx.	SD	Rated current I_{nA} 160 A, 250 A, 400 A		PS*/ P. unit	Weight per unit approx.
	d	Type	Article No.		kg	d	Type	Article No.		kg
Feeding units										
End feeding units with 3-pole switch disconnector and with cable entry plate[1] Cable entry for single-core cables from 3 sides. 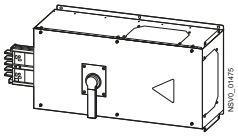										
• Copper	X	**BD2C-250-EESC-DC**				X	**BD2C-400-EESC-DC**			
Distribution board feeding units without joint block Bolt terminal (bolt included in scope of supply); PE position can be changed 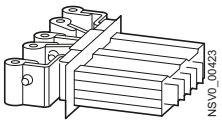										
• Aluminum	X	**BD2A-250-VE-DC**				X	**BD2A-400-VE-DC**			
• Copper	X	**BD2C-250-VE-DC**				X	**BD2C-400-VE-DC**			
Center feeding units without joint block Bolt terminal (bolt included in scope of supply); edgewise, flat and PE positions can be changed (by rotating the whole busbar piece) Cable entry for multi-core cables from 3 sides 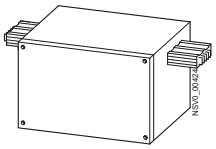										
• Aluminum		–				X	**BD2A-400-ME-DC**			
• Copper		–				X	**BD2C-400-ME-DC**			
With cable entry plate[1] Cable entry for single-core cables from 3 sides 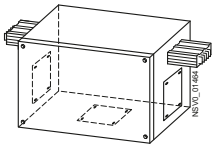										
• Aluminum		–				X	**BD2A-400-ME-EBAL-DC**			
• Copper		–				X	**BD2C-400-ME-EBAL-DC**			

Accessories for cable entry, see page 4/62

[1] Single-core cable entry plate, undrilled.

For information on DC application, see page 4/94.

4

* You can order this quantity or a multiple thereof.

DC feeding units (on request) NEW

Selection and ordering data

Version + - + - PE	SD	Rated current I_n 630 A, 800 A, 1000 A		PS*/ P. unit	Weight per unit approx.	SD	Rated current I_n 1250 A		PS*/ P. unit	Weight per unit approx.
	d	Type	Article No.		kg	d	Type	Article No.		kg
Feeding units										
End feeding units with 3-pole switch disconnector and with cable entry plate[1] Cable entry for single-core cables from 3 sides. 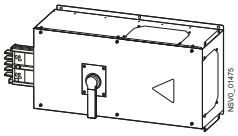										
• Copper	X	**BD2C-630-EESC-DC**					–			
• Copper	X	**BD2C-800-EESC-DC**					–			
Distribution board feeding units without joint block Bolt terminal (bolt included in scope of supply); PE position can be changed 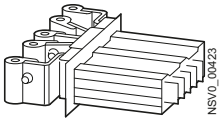										
• Aluminum	X	**BD2A-100-VE-DC**					–			
• Copper	X	**BD2C-100-VE-DC**				X	**BD2C-1250-VE-VE-DC**			
Center feeding units without joint block Bolt terminal (bolt included in scope of supply); edgewise, flat and PE positions can be changed (by rotating the whole busbar piece) Cable entry for multi-core cables from 3 sides 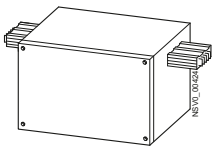										
• Aluminum	X	**BD2A-1000-ME-DC**					–			
• Copper	X	**BD2C-1000-ME-DC**					–			
With cable entry plate[1] Cable entry for single-core cables from 3 sides 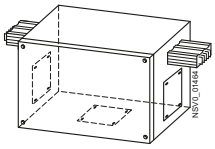										
• Aluminum	X	**BD2A-1000-ME-MBAL-DC**					–			
• Copper	X	**BD2C-1000-ME-MBAL-DC**					–			

Accessories for cable entry, see page 4/62

[1] Single-core cable entry plate, undrilled.

For information on DC application, see page 4/94.

* You can order this quantity or a multiple thereof.

Dimensional drawings

Straight trunking units

BD2.-.-...

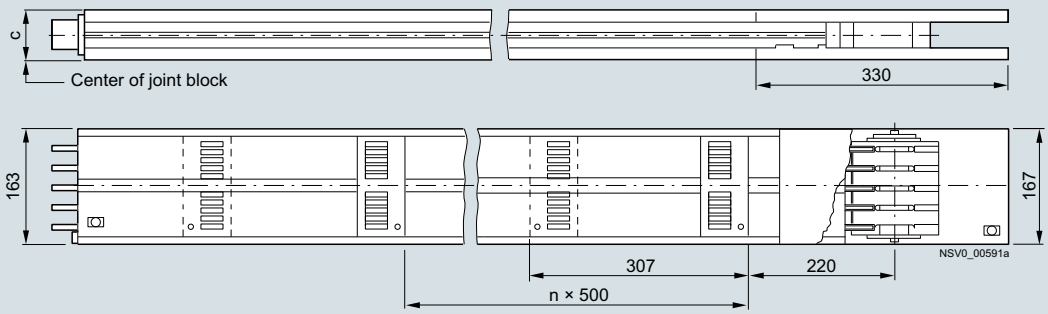

Length m	Number of tap-off points on both sides n × 500
0.5 ... 1.25	–
1.26 ... 2.25	4 ... 8
2.26 ... 3.25	8 ... 12
	On optional lengths, it may not be possible to fit tap-off units to all tap-off points

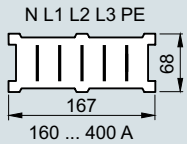

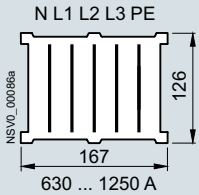

Junction units

L-units

BD2.-...-LR-...(-G*)
BD2.-...-LL-...(-G*)

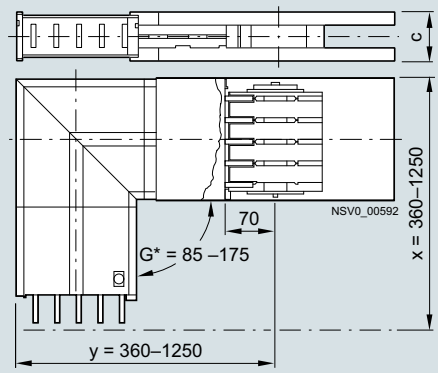

Rated current / A	c / mm
160 ... 400	68
630 ... 1250	126

BD2.-...-LV-...(-G*)
BD2.-...-LH-...(-G*)

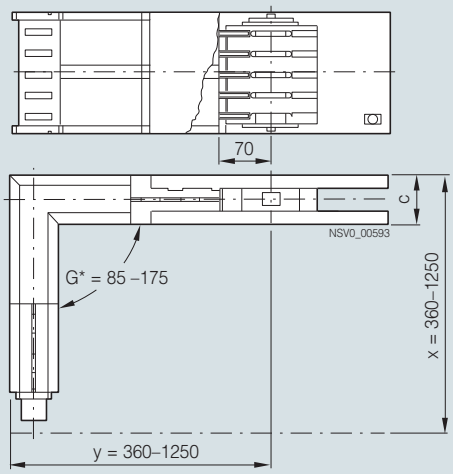

Z-units

BD2.-...-ZR-...
BD2.-...-ZL-...

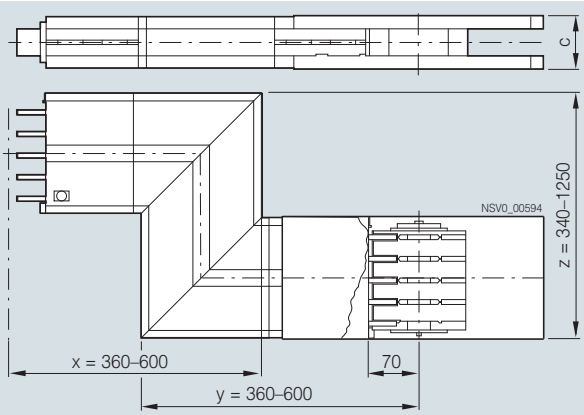

BD2.-...-ZV-...
BD2.-...-ZH-...

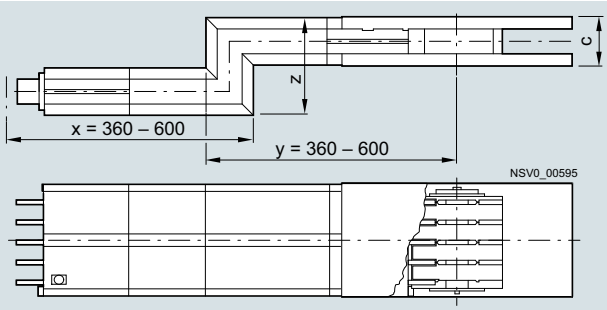

Rated current / A	z / mm
160 ... 400	140 ... 1250
630 ... 1250	260 ... 1250

Configuration aids

Junction units

T-units

BD2.-...-TR
BD2.-...-TL

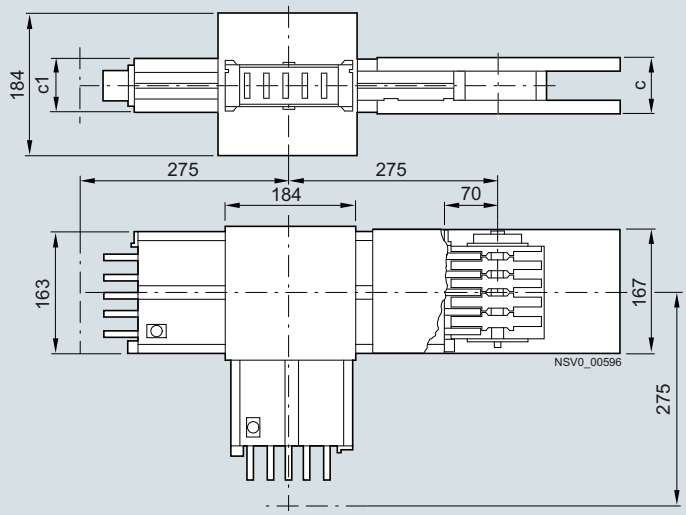

Rated current / A	c / mm	c1 / mm
160 ... 400	68	64
630 ... 1000	126	122

BD2.-...-TV
BD2.-...-TH

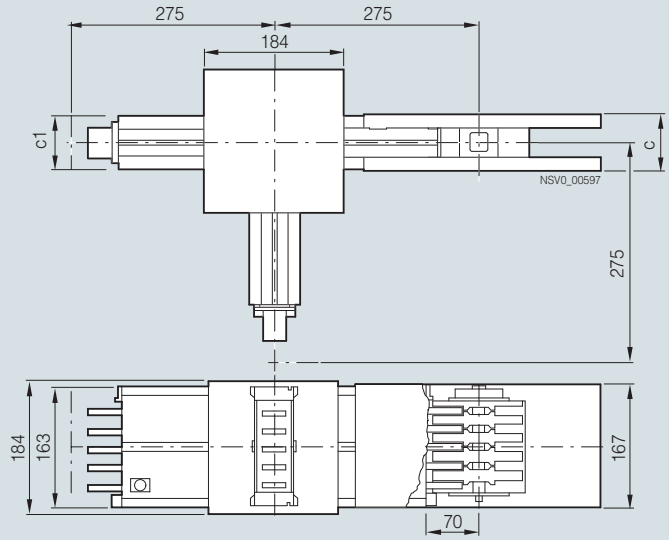

Rated current / A	c / mm	c1 / mm
160 ... 400	68	64
630 ... 1250	126	122

Junction units

Flexible junction units

BD2-400-R, BD2-800-R

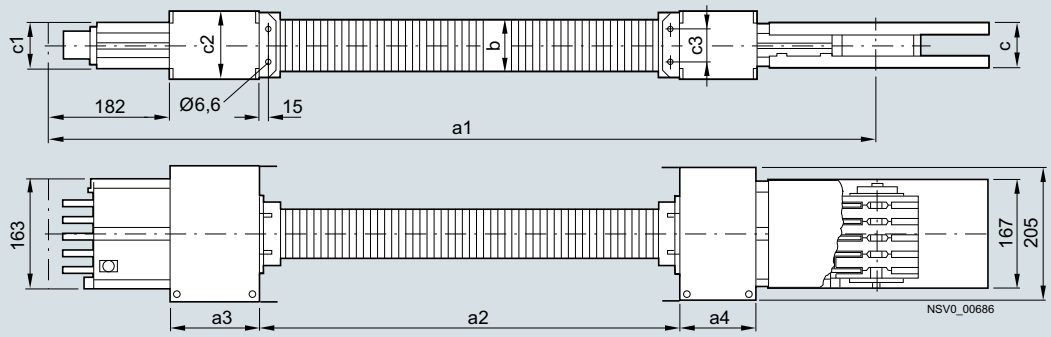

Type	a1	a2	a3	a4	b	c	c1	c2	c3
BD2-400-R	1250	512	187	187	79	68	64	101	50
BD2-800-R	1750	786	350	250	146.5	126	122	195	145

U shape

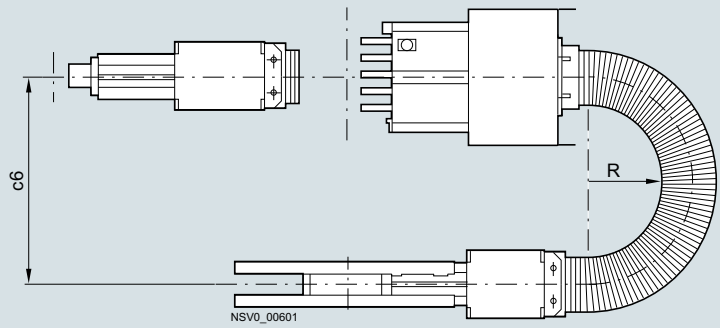

Type	c6	R_{min}
BD2-400-R	299	110
BD2-800-R	170	170

Z shape

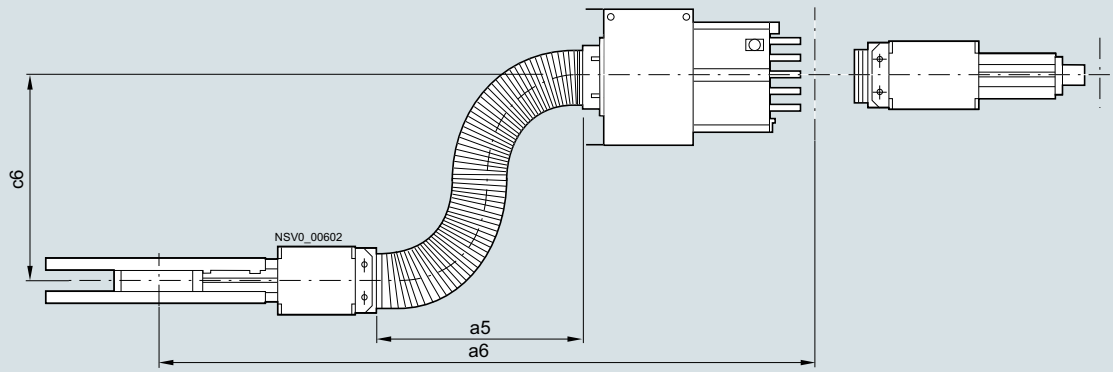

Type	a5	a6	c6	R_{min}
BD2-400-R	175	1000	355	110
BD2-800-R	530	1590	550	170

Configuration aids

Distribution board feeding units

BD2.-250-VE

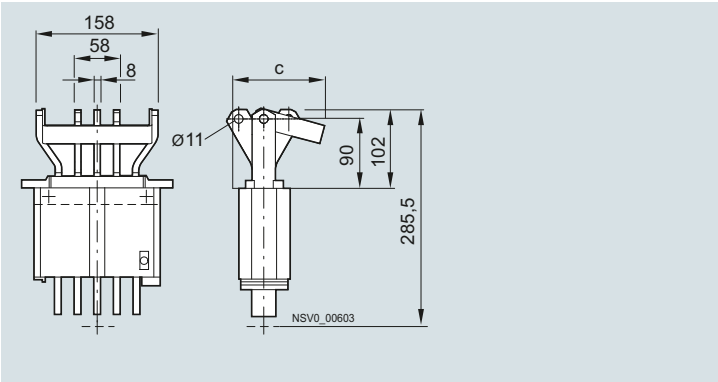

BD2.-400-VE, BD2.-1000-VE

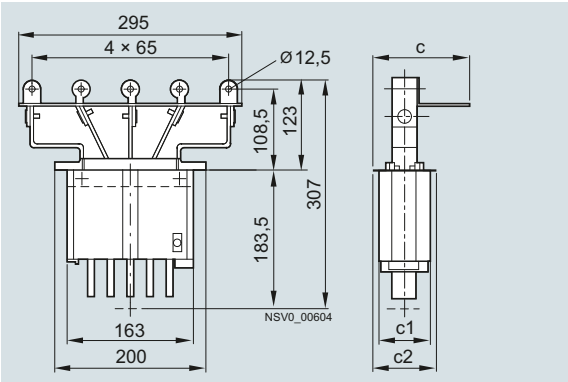

BD2.-1250-VE

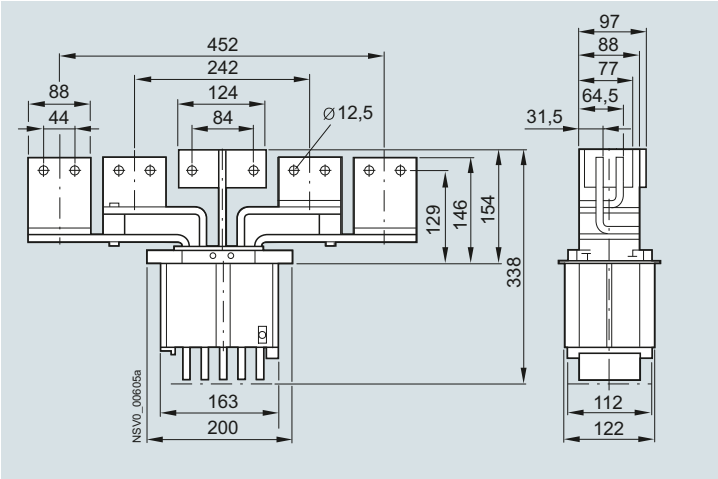

Enclosure cut-out

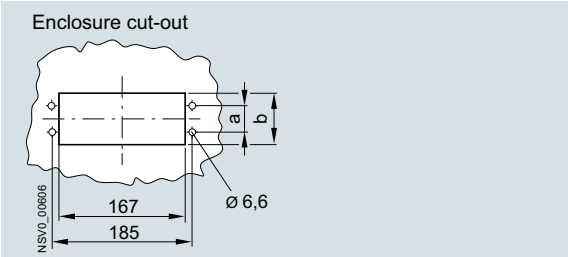

Type	a	b	c	c1	c2
BD2.-250-VE BD2.-400-VE	34	68	121	64	84
BD2.-1000-VE BD2.-1250-VE	92	126	155.5	122	142

End feeding units

BD2.-250-EE

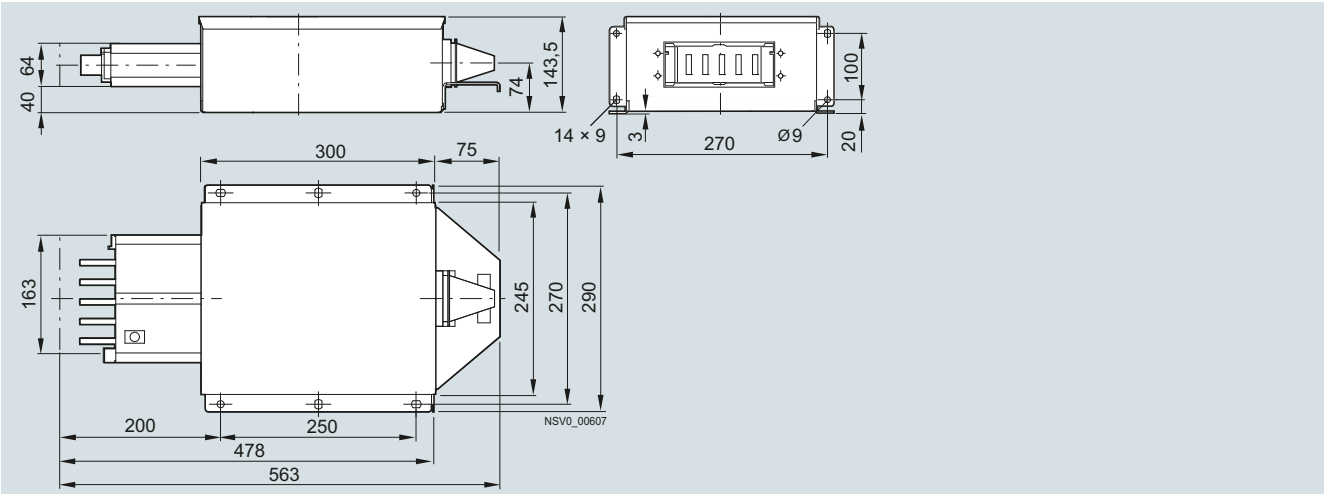

End feeding units

BD2.-400-EE

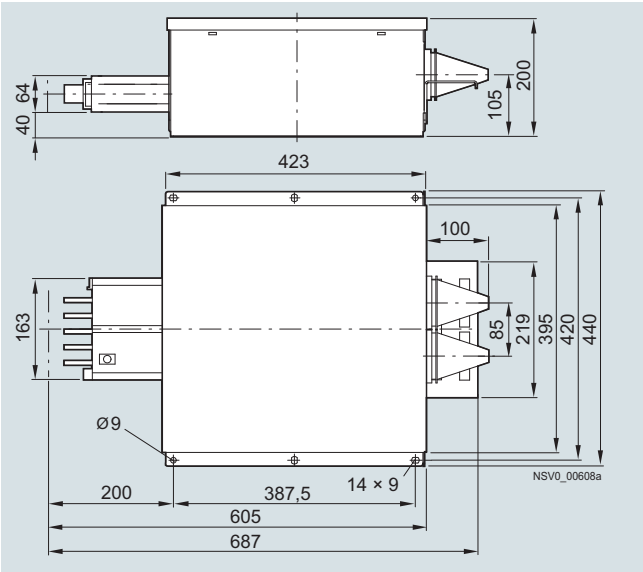

BD2.-1000-EE

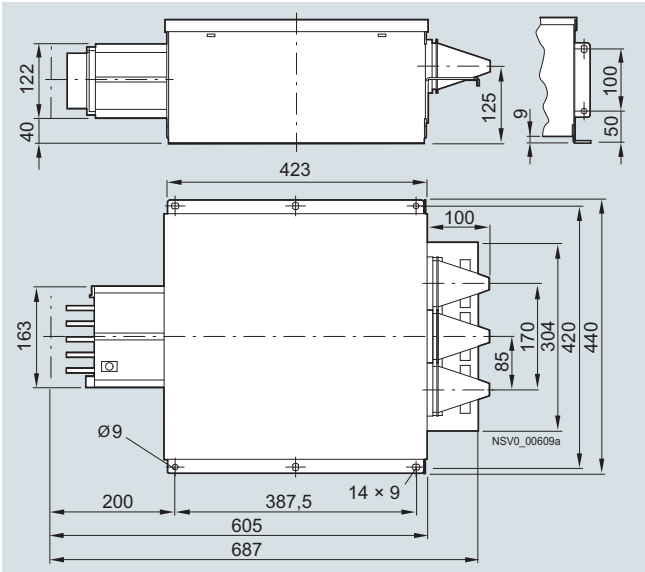

BD2.-1250-EE

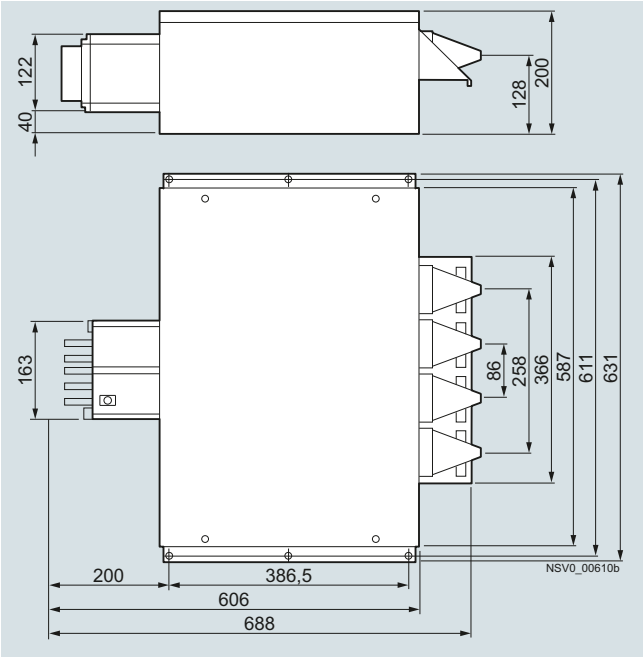

4

Configuration aids

Cabling boxes

BD2-400-KR (BD2.-400-EE)

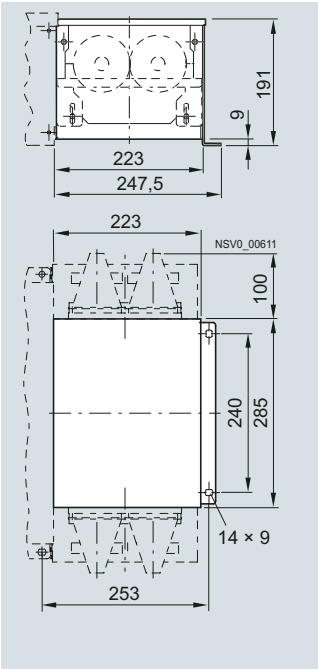

BD2-1000-KR (BD2.-1000-EE)

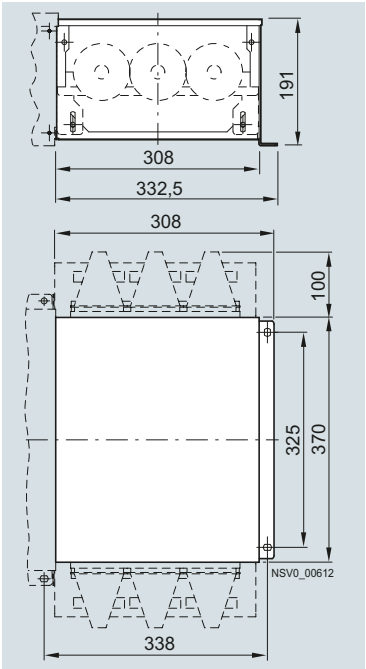

BD2-1250-KR (BD2.-1250-EE)

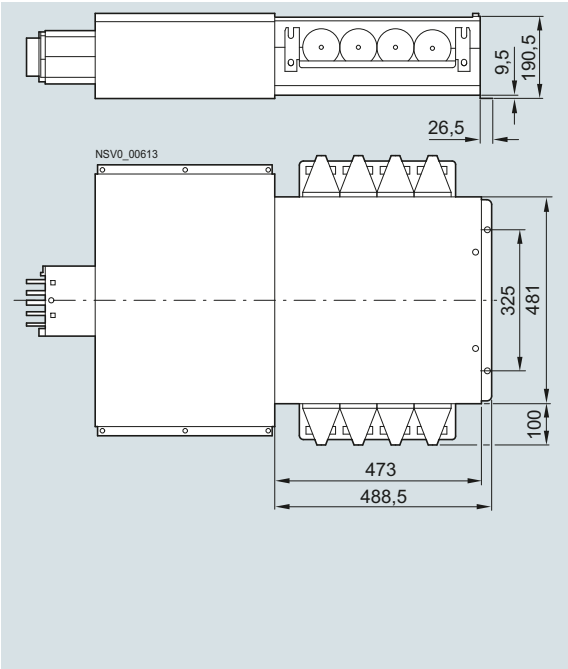

End feeding units with switch disconnector

BD2C-250-EESC, BD2C-315-EESC

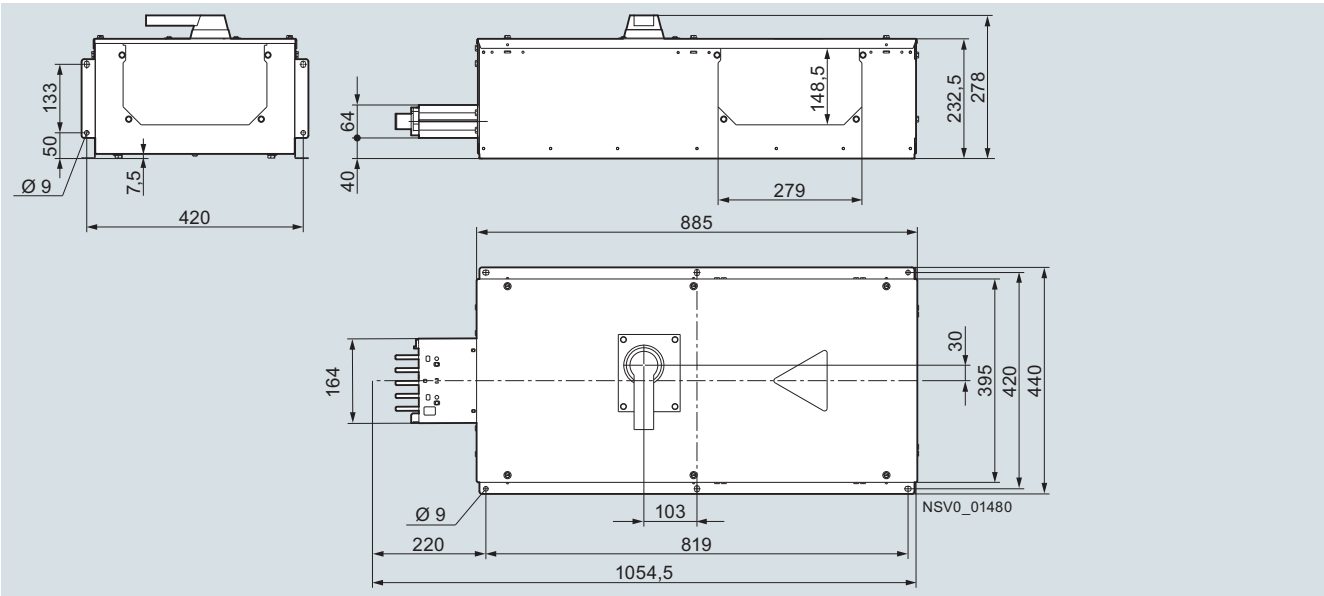

End feeding units with switch disconnector

BD2C-400-EESC

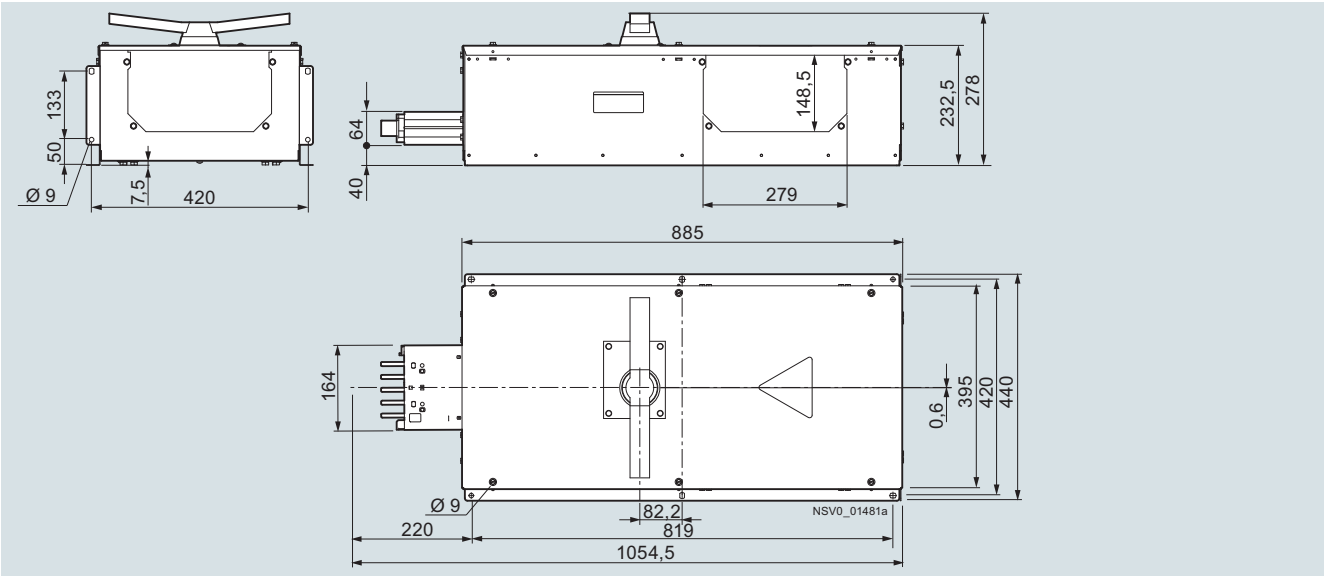

BD2C-630-EESC, BD2C-800-EESC

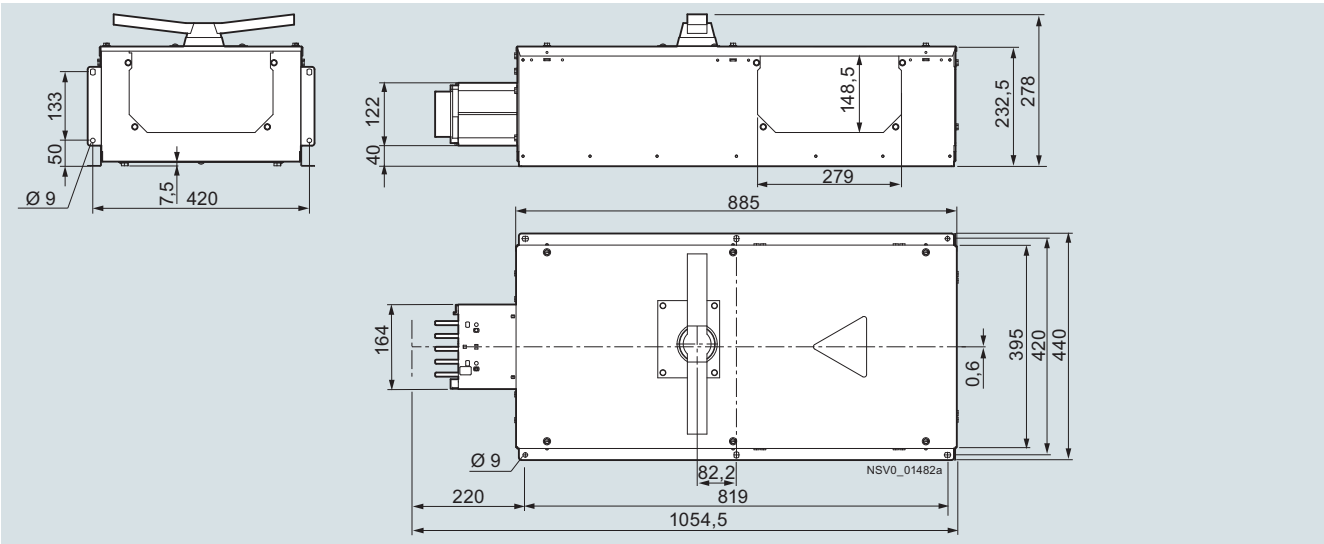

Center feeding units

BD2.-400-ME

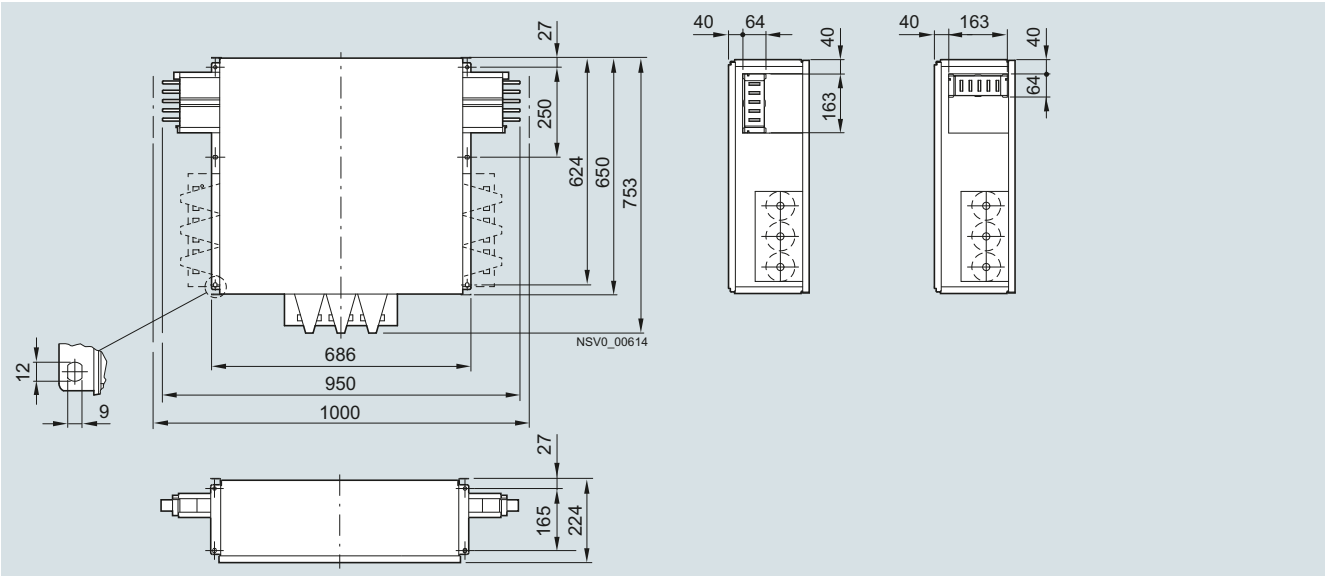

BD2.-1000-ME

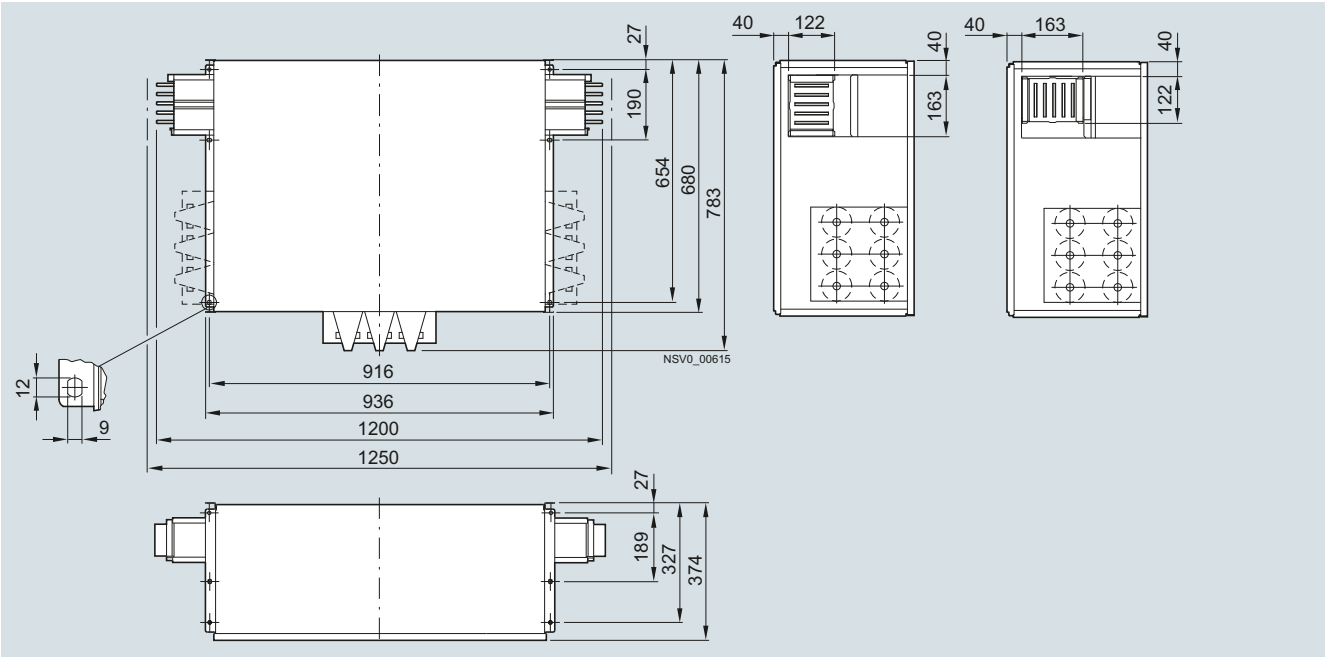

Tap-off units

Size 1 up to 25 A

BD2-AK1/...

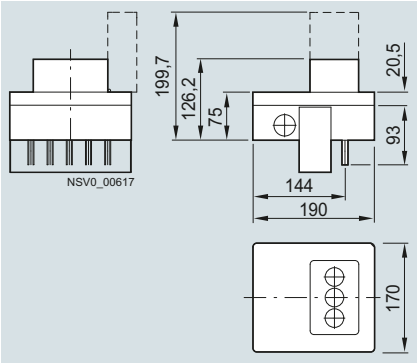

BD2-AK1/2SD163...,
BD2-AK1/3SD163...,

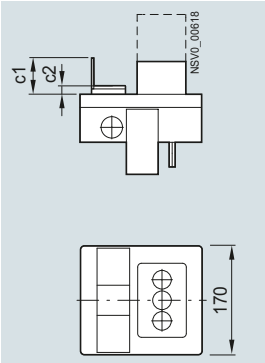

BD2-AK1/2CEE163...

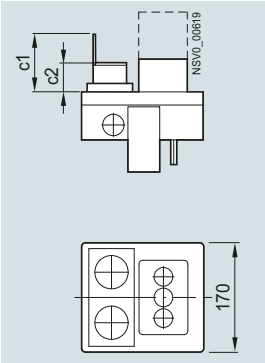

BD2-AK1/CEE163...,
BD2-AK1/CEE165...

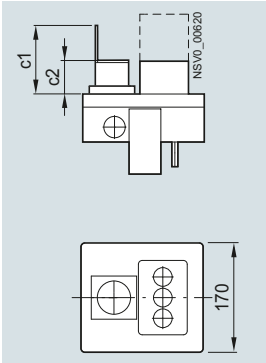

Type	c1	c2
BD2-AK1/2SD163..., BD2-AK1/3SD163...,	71	13
BD2-AK1/2CEE163..., BD2-AK1/CEE163...	88	44
BD2-AK1/CEE165...	106	52

Tap-off units

Size 02 up to 63 A

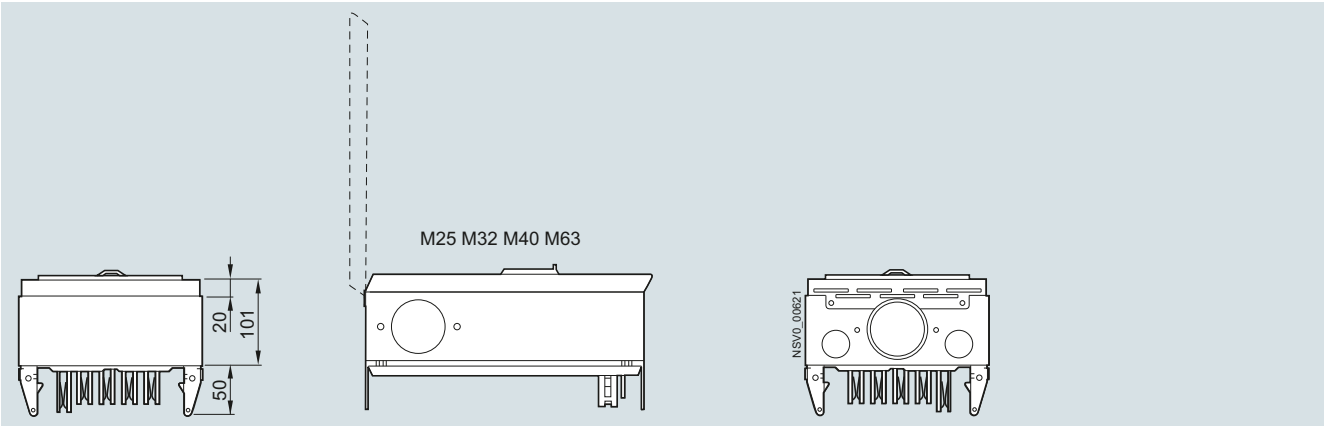

BD2-AK02X/F...
BD2-AK02X/GB...
BD2-AK02X/S...

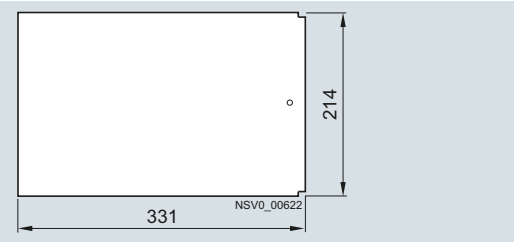

BD2-AK02M2/A...
BD2-AK02M2/F

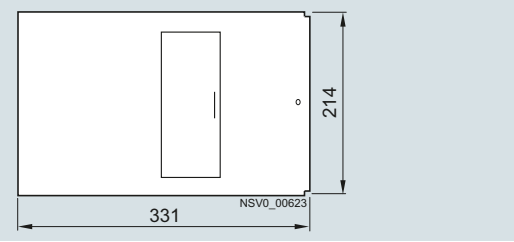

Tap-off units

Size 2 up to 63 A

BD2-AK2X/F...,
BD2-AK2X/S...

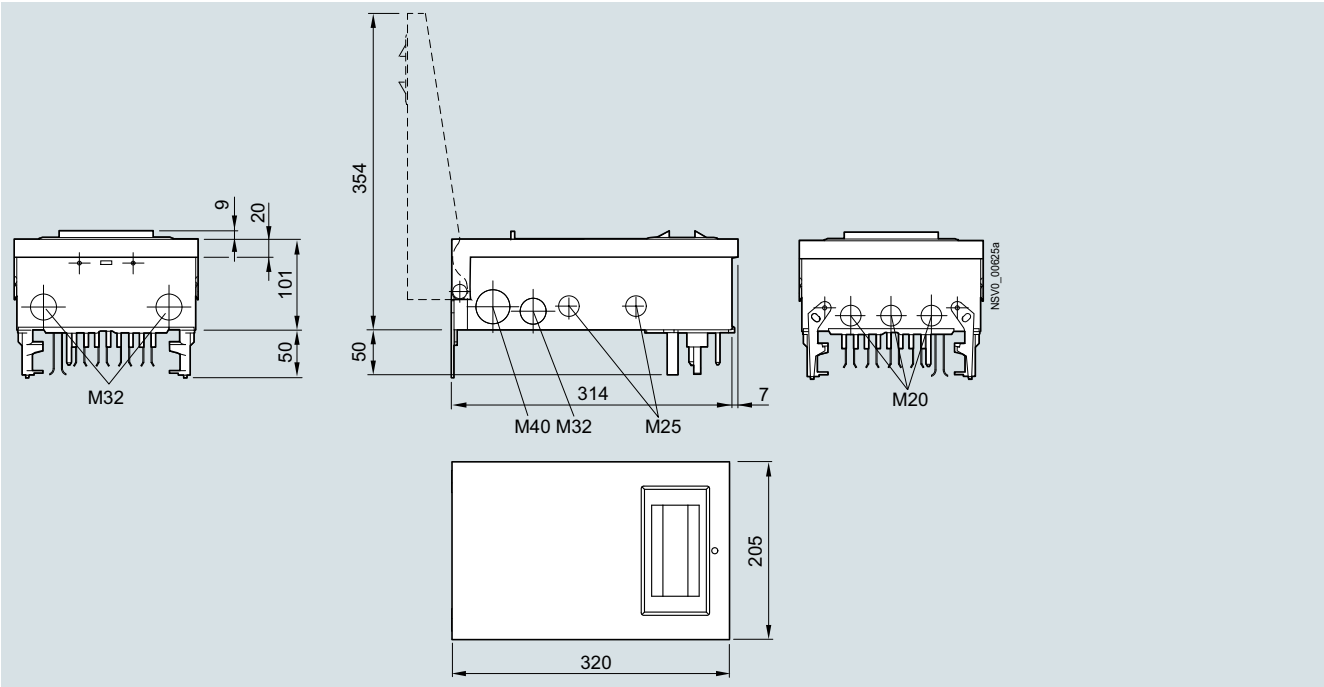

BD2-AK2M2/A...,
BD2-AK2M2/F

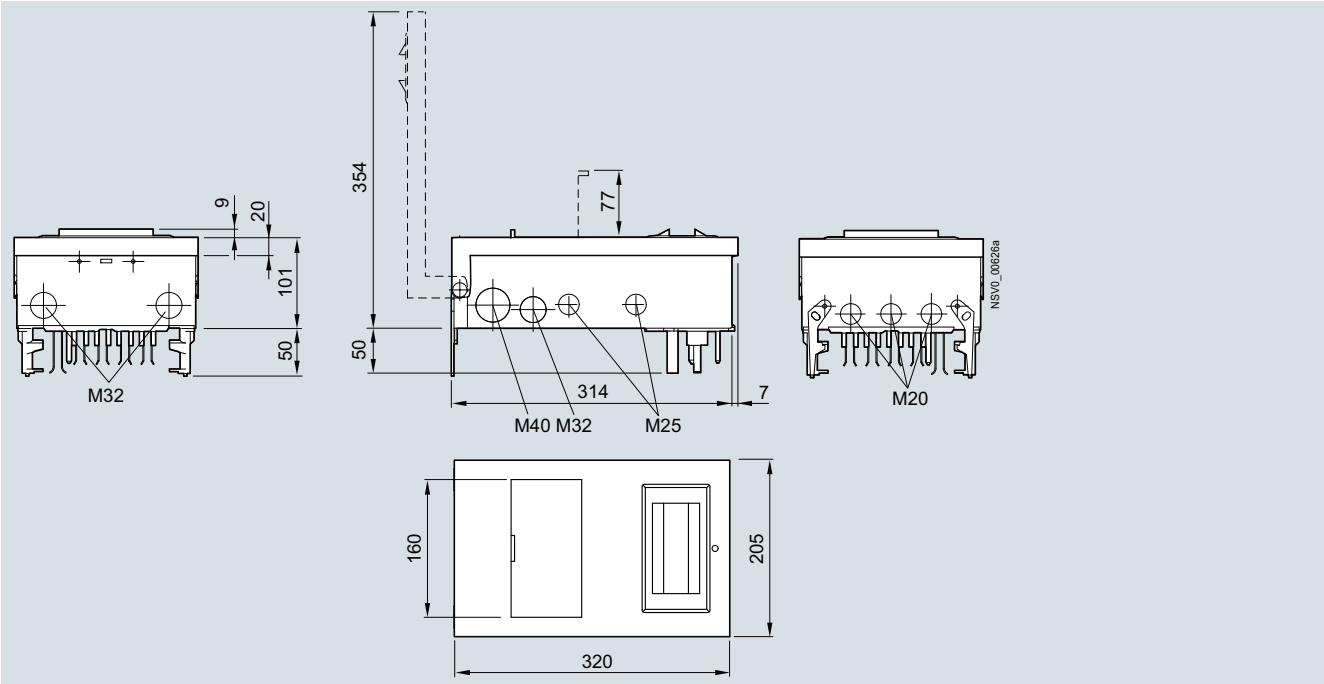

Configuration aids

Tap-off units

Size 2 up to 63 A, versions with CEE and Schuko socket outlets

BD2-AK2M2/CEE165FIA163
BD2-AK2X/CEE325S33
BD2-AK2M2/CEE325A323
BD2-AK2X/2CEE165S14
BD2-AK2M2/2CEE165A163
BD2-AK2X/2CEE165S27

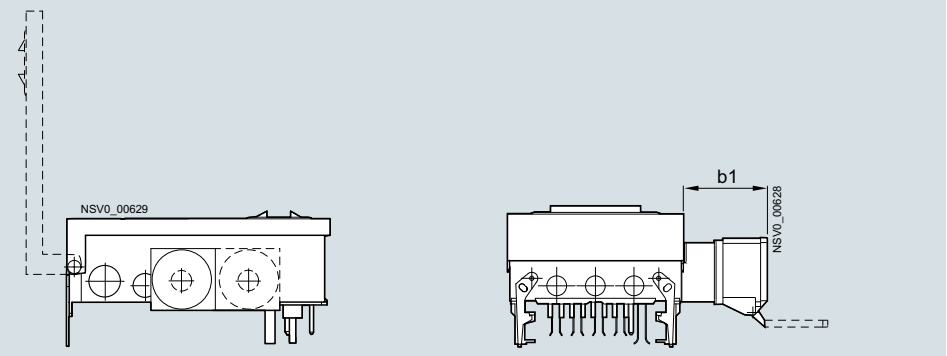

Type	b1	b2
BD2-AK2X/CEE325S33 BD2-AK2M2/CEE325A323	98	–
BD2-AK2X/2CEE165S27 BD2-AK2X/2CEE165S14 BD2-AK2M2/ CEE165FIA163 BD2-AK2M2/2CEE165A163	86	–
BD2-AK2M2/2SD163CEE165A163	86	54

BD2-AK2X/3BS133...

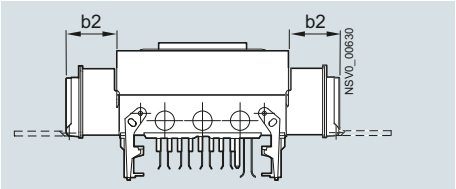

BD2-AK2M2/2SD163CEE165A163

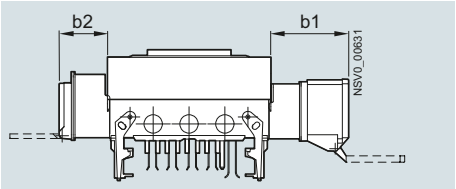

BD2-AK2X/CEE635S33

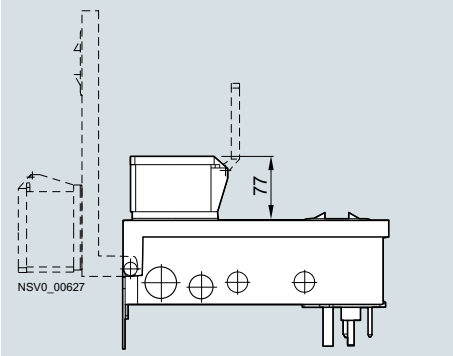

Tap-off units

Size 03 up to 125 A

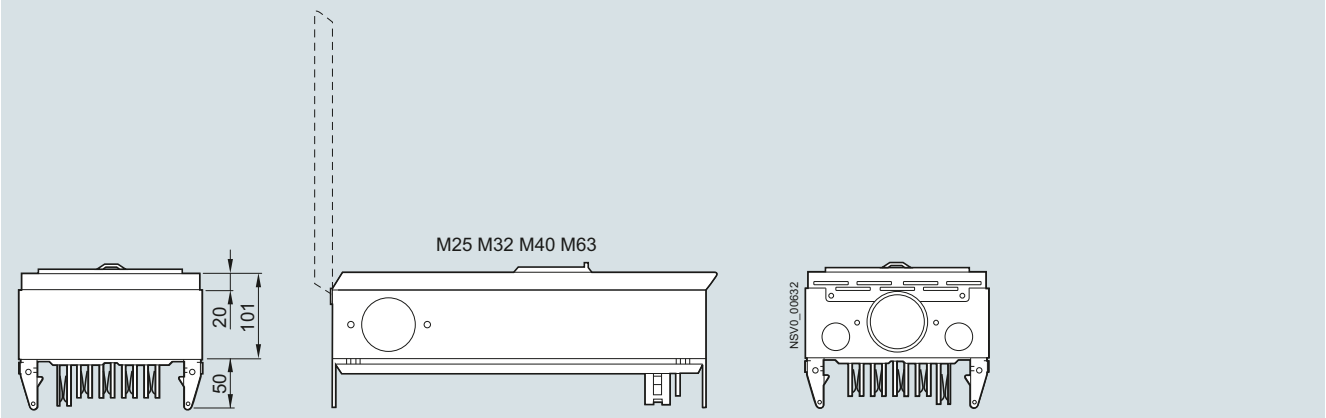

BD2-AK03X/F...

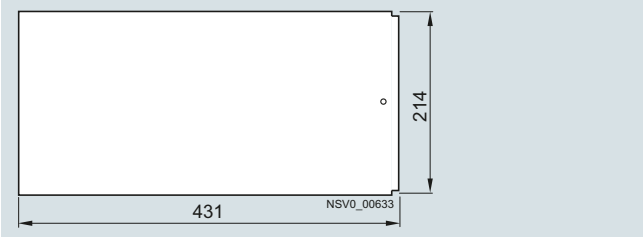

BD2-AK03M2/A...

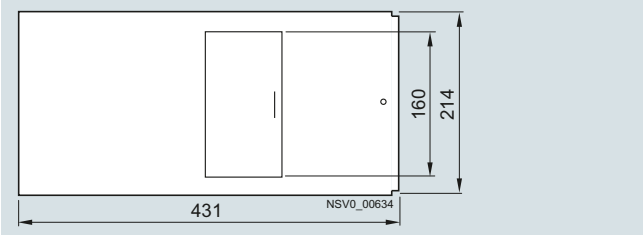

With fuse switch disconnector and circuit breaker

BD2-AK03X/GSTA00

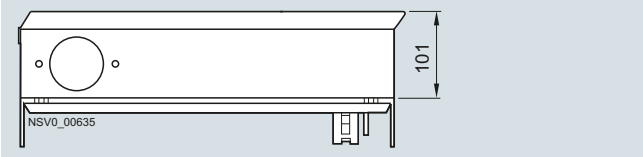

BD2-AK03X/FS...

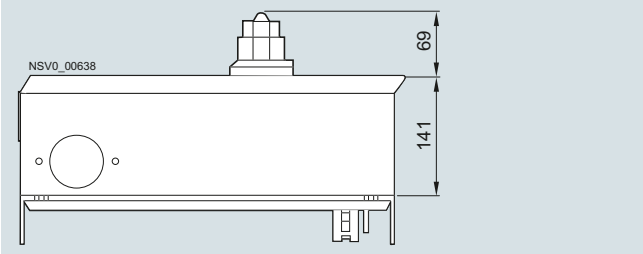

Configuration aids

Tap-off units

Size 03 up to 125 A

BD2-AK03/LSD...

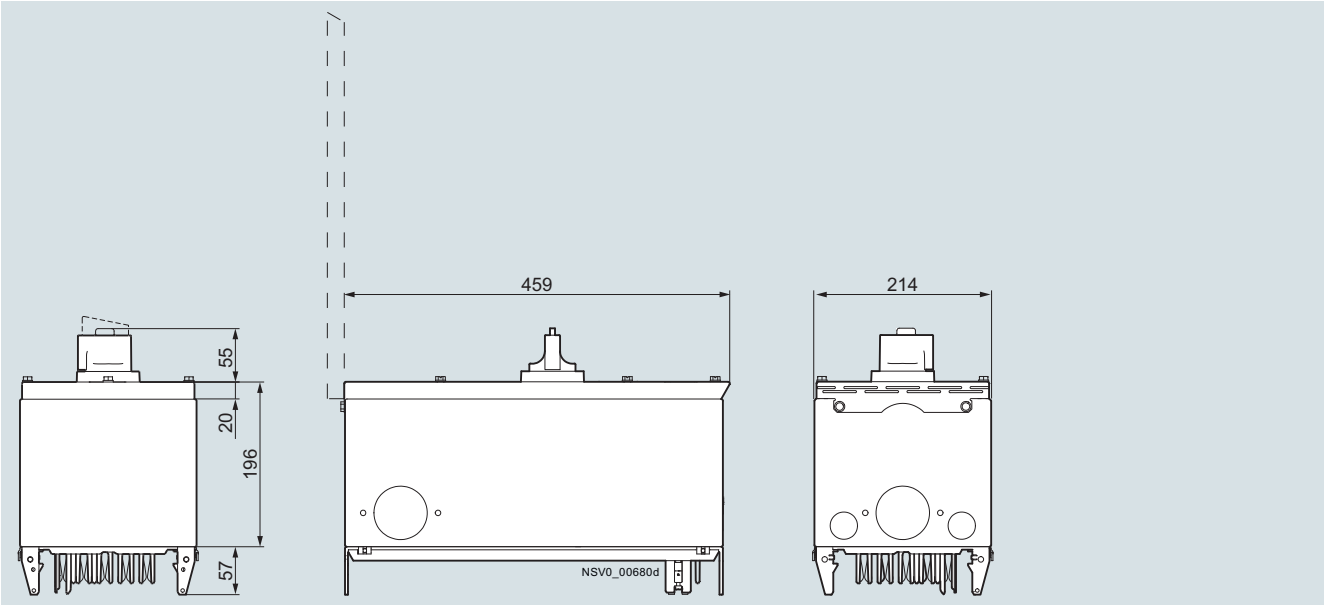

Size 3 up to 125 A

BD2-AK3X/GS00

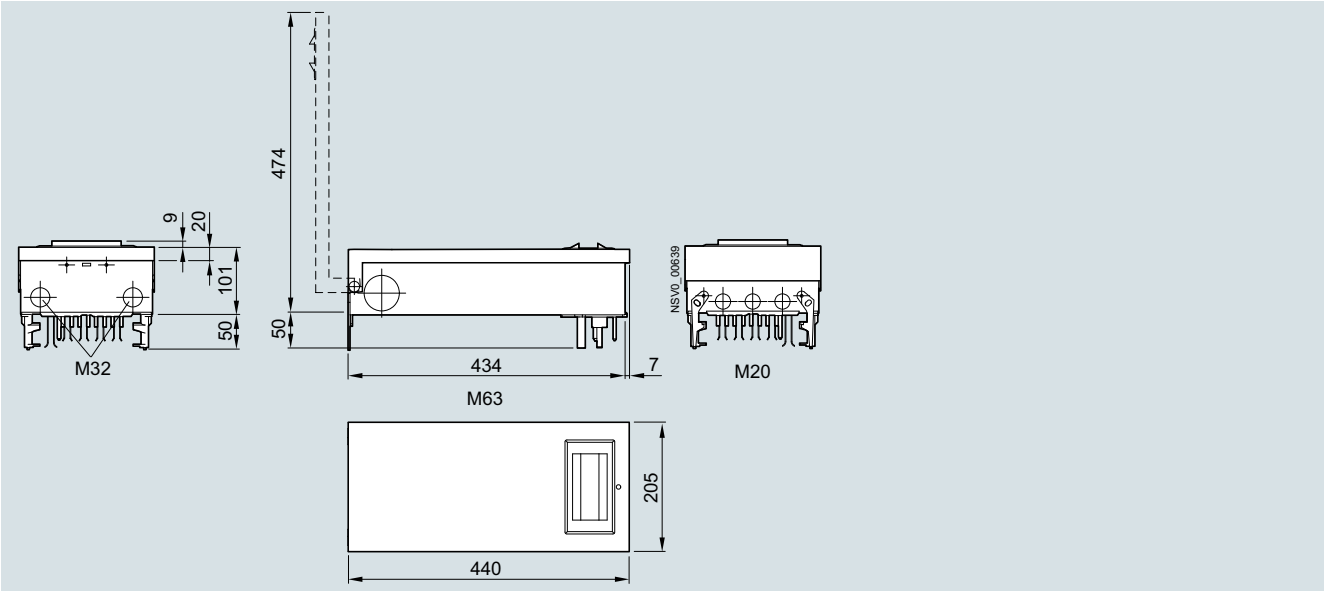

With fuse switch disconnector

BD2-AK3X/GSTZ00

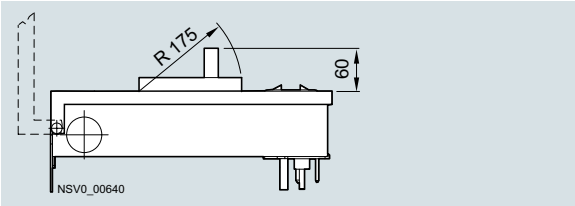

For free arrangement of components

BD2-AK3M2/F

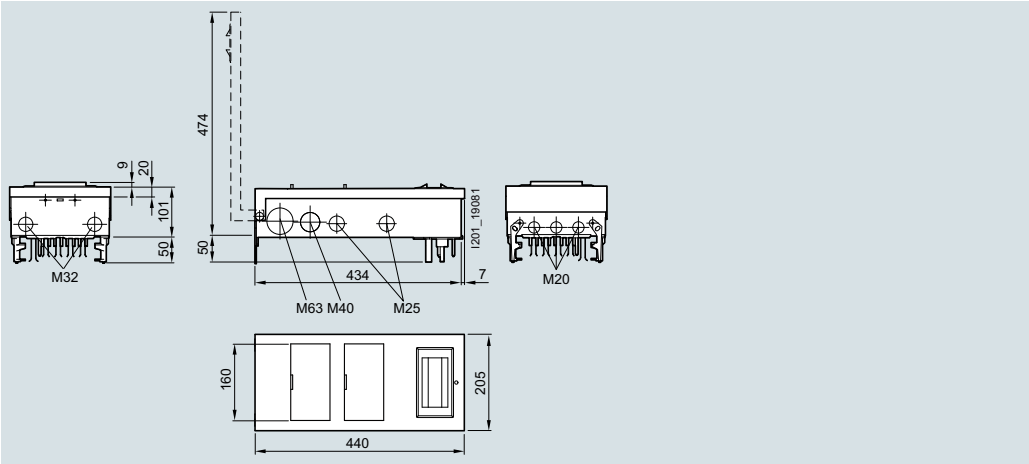

Tap-off units

Size 04 up to 250 A

BD2-AK04/LSD...

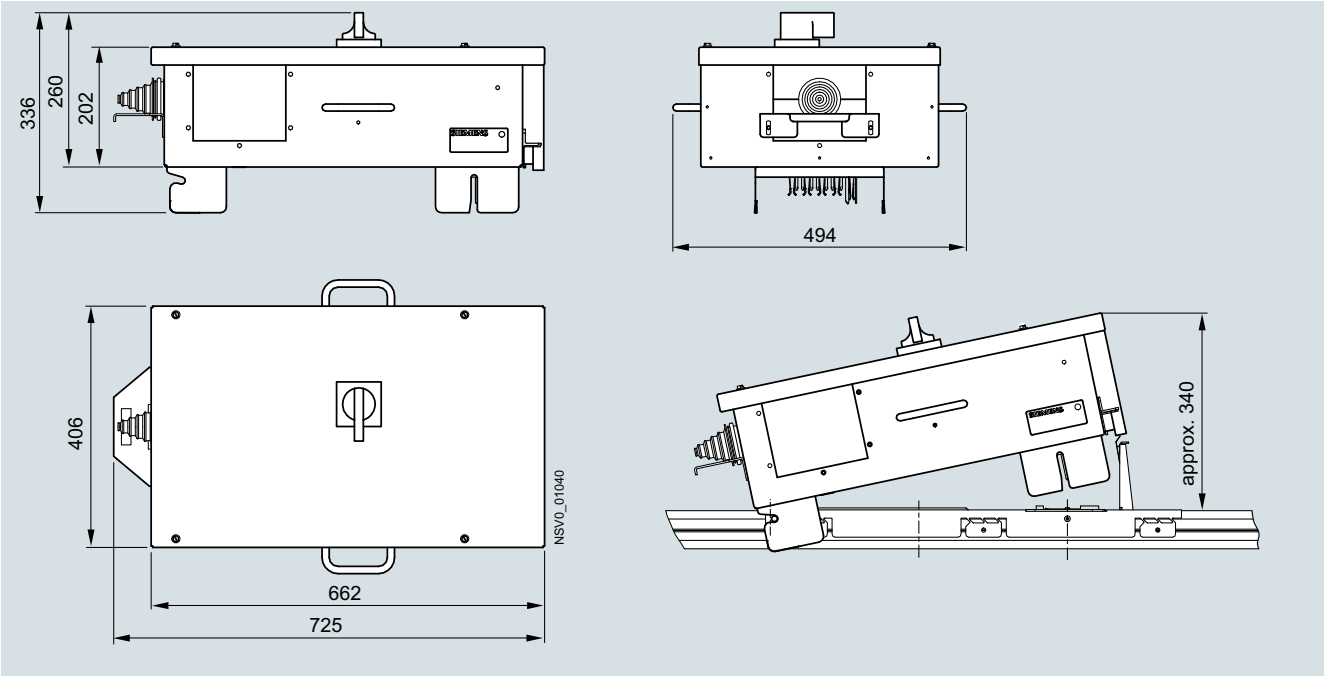

BD2-AK04/SNH1, BD2-AK04/GB250J-...

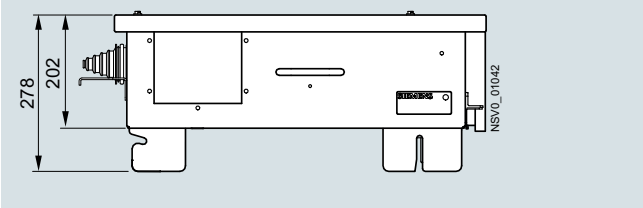

BD2-AK04/FS...

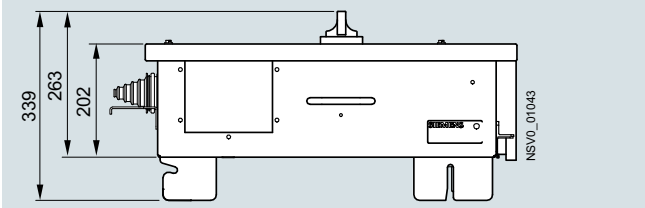

Configuration aids

Tap-off units

Size 05, 06 up to 630 A

BD2-AK05/LSD..., BD2-AK06/LSD...

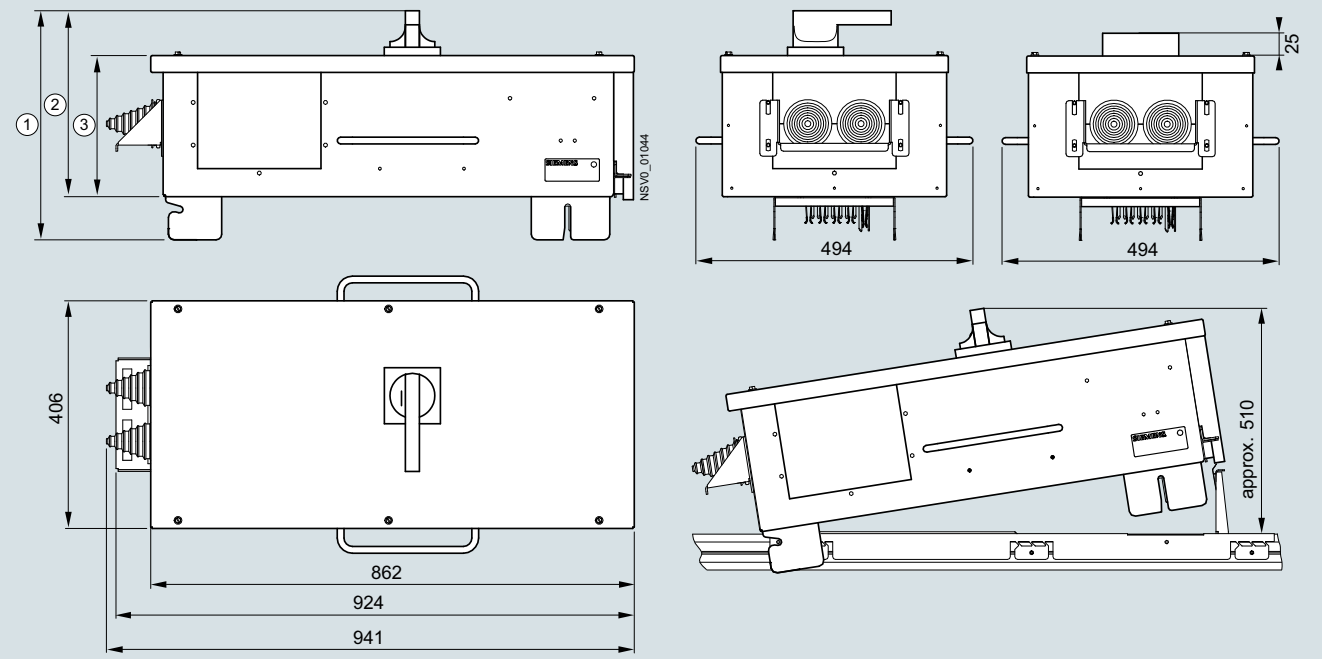

1 ...-AK05 + AK06 with 3VA14: 392 mm
...-AK06: 512 mm (for equipping with 3VA25)

2 ...-AK05 + AK06 with 3VA14: 307 mm
...-AK06: 427 mm (for equipping with 3VA25)

3 ...-AK05 + AK06 with 3VA14: 252 mm
...-AK06: 352 mm (for equipping with 3VA25)

BD2-AK05/SNH2, BD2-AK06/SNH3

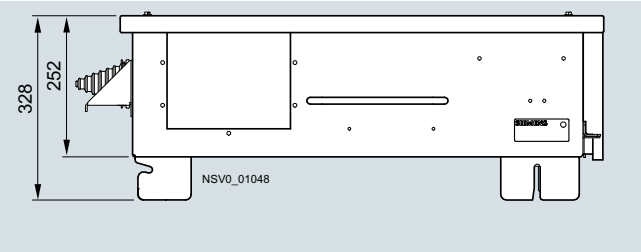

BD2-AK05/FS...

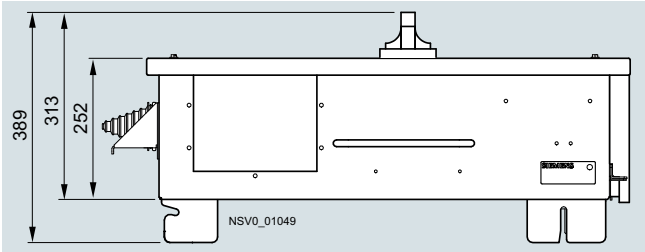

Ancillary equipment units

BD2-GKM2/F

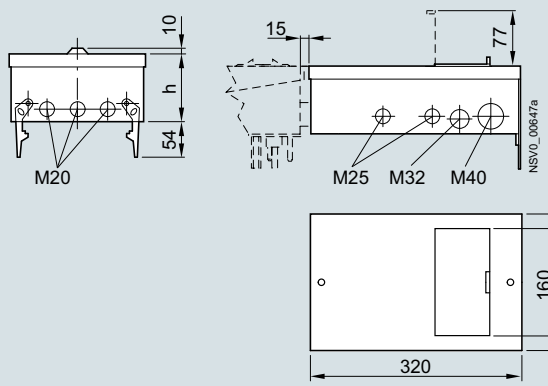

Type	h
BD2-GKM2/F	101
BD2-GKX/F	151

BD2-GKX/F

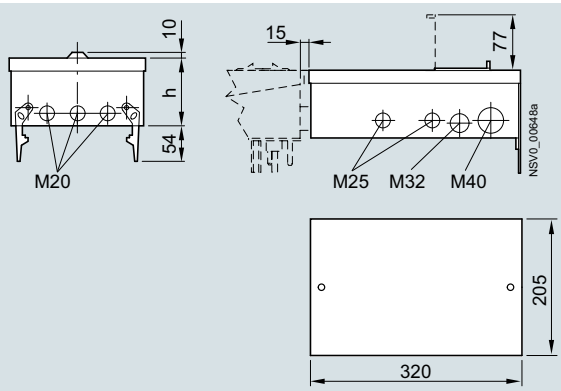

Type	h
BD2-GKM2/F	101
BD2-GKX/F	151

Configuration aids

Protective sleeves

BD2-400-D

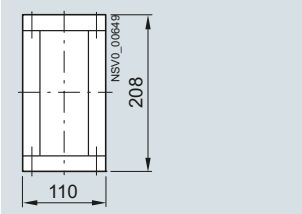

BD2-1250-D

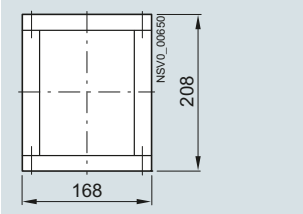

BD2-...-D

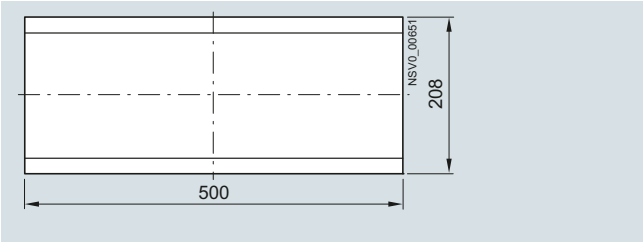

Fire barriers

+BD2-S90 (S120)-...

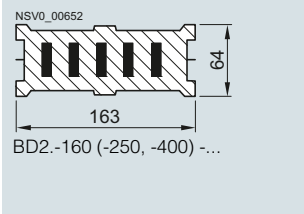

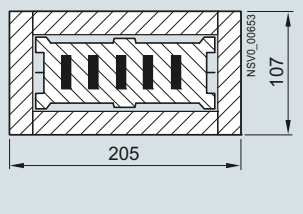

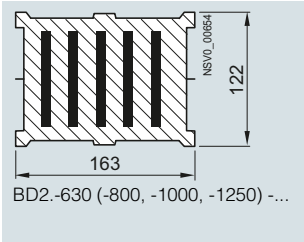

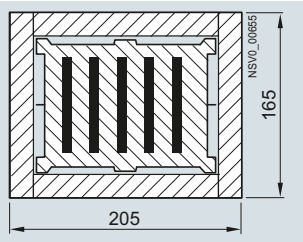

Joint blocks

BD2-400-EK, BD2-1250-EK

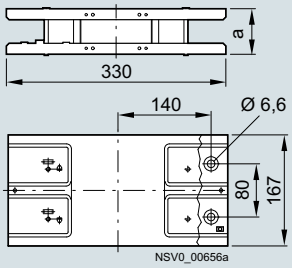

Type	a mm
BD2-400-EK	68
BD2-1250-EK	126

End flanges

BD2-400-FE, BD2-1250-FE

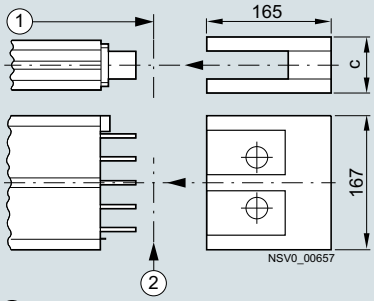

Type	c mm
BD2-400-FE	68
BD2-1250-FE	126

(1) Length of trunking unit
(2) End of end flange = center of joint block

Fixing

Fixing brackets, flat and edgewise

BD2-400-BB

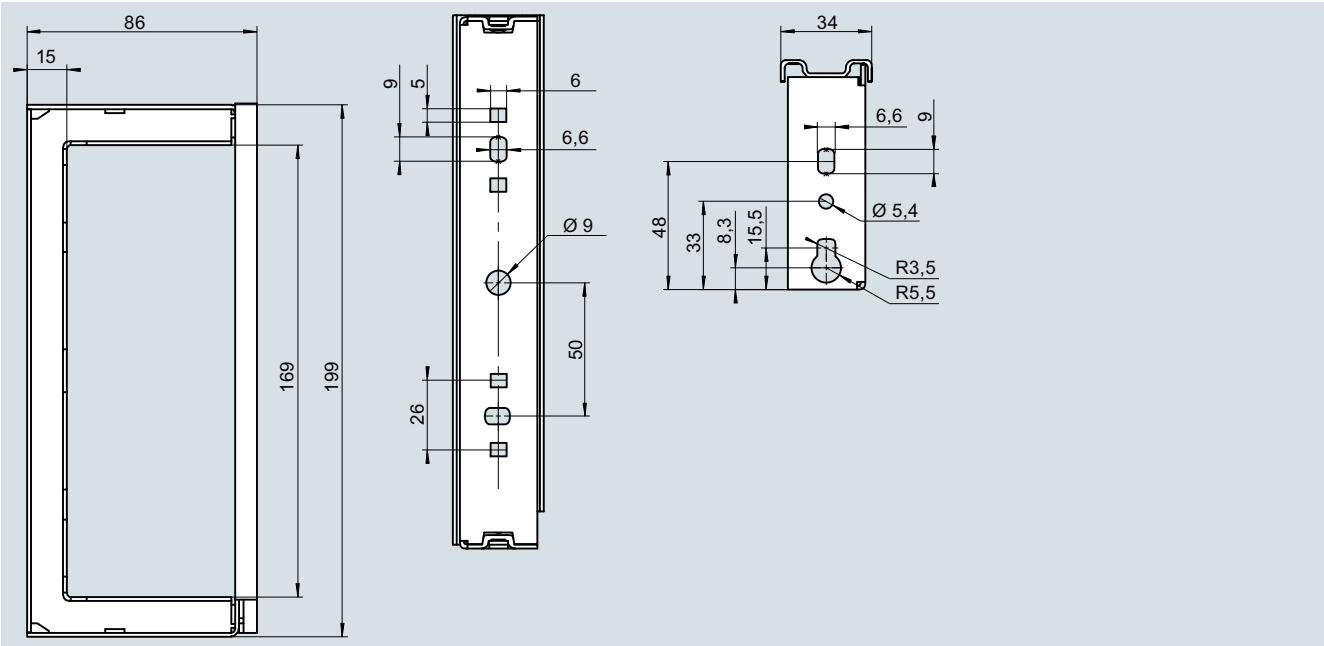

BD2-1250-BB

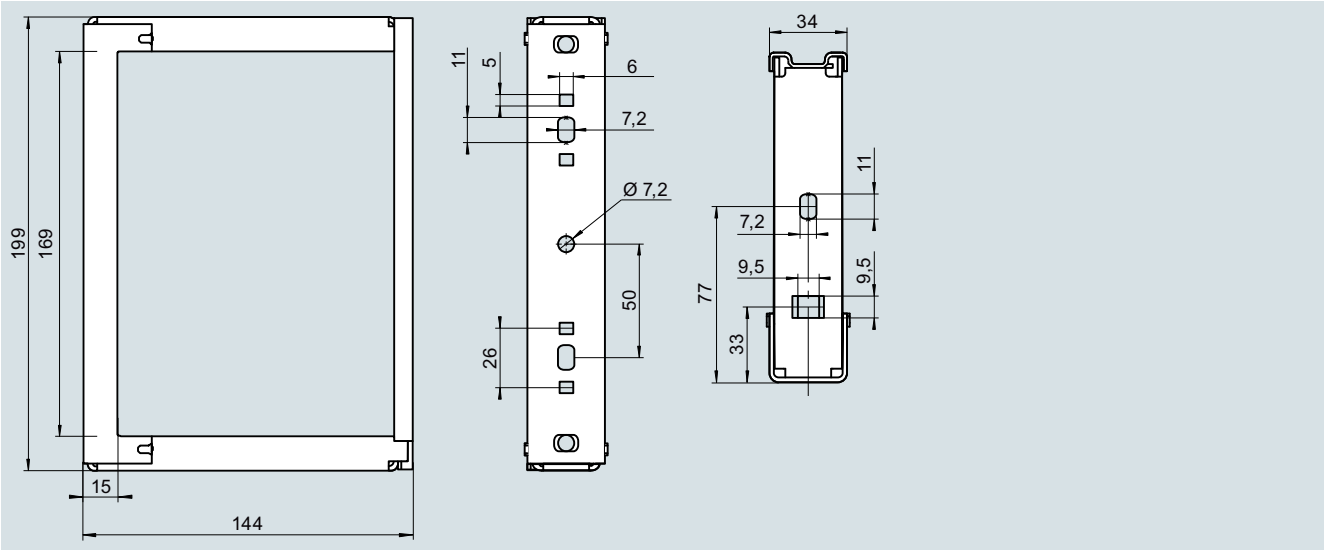

Configuration aids

Spacers

BD2-DSB

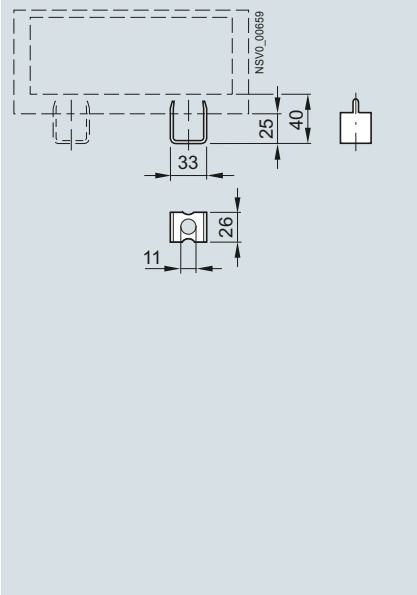

Spacer brackets

BD2-BD

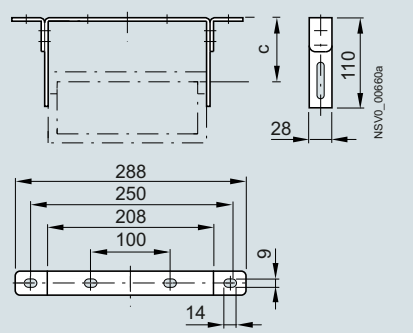

Type	c mm
BD2-400-BD	30 ... 82
BD2-1250-BD	50 ... 82

To secure systems directly to concrete walls, always use steel expansion bolts approved by the local building inspectorate!

For example:
- RICO, Article No. 15J1-A08/40
- Fischerwerke, type SLM8N, Article No. 50521

Vertical fixing elements

BD2-BWV

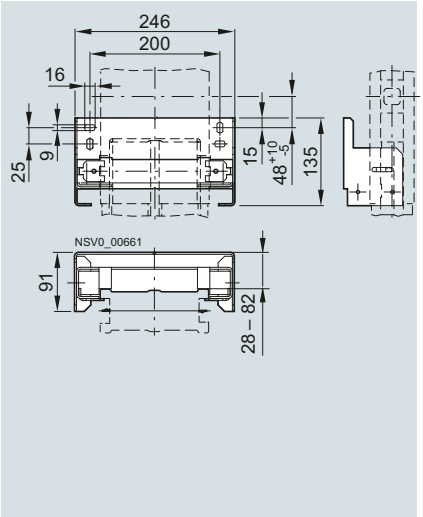

Vertical fixing elements

BD2-BDV

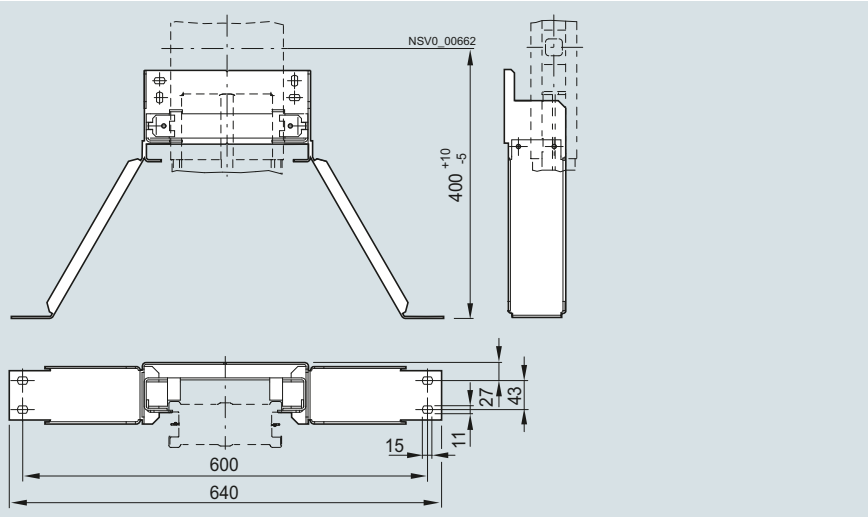

Vertical fixing brackets

BD2-BVF

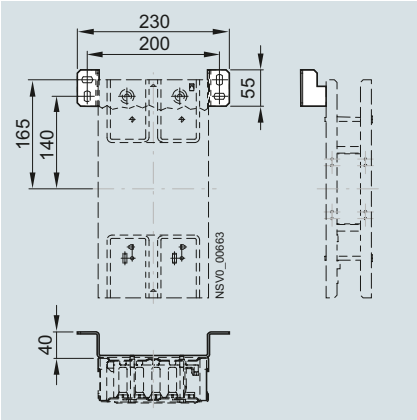

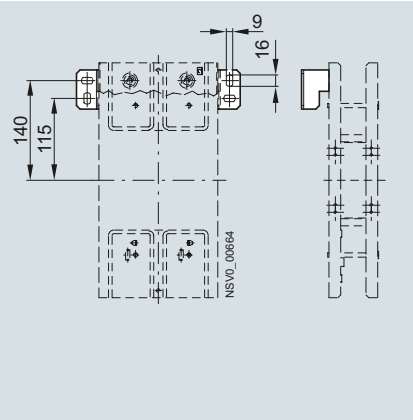

Fixing for mounting rails

BD2-BVC

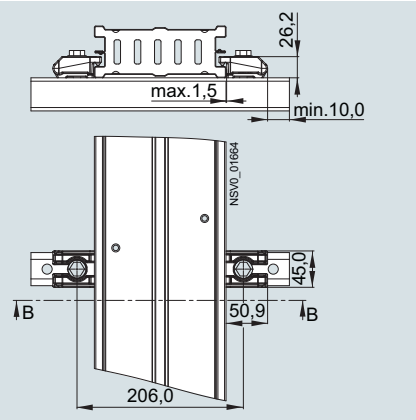

Protective covers according to IP55

For connection points or end flanges

BD2-400-FS, BD2-1250-FS, BD2-400-FSE, BD2-1250-FSE

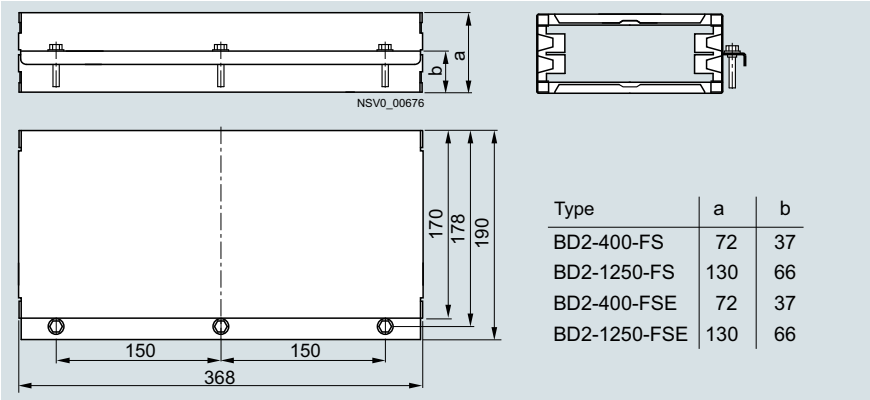

Type	a	b
BD2-400-FS	72	37
BD2-1250-FS	130	66
BD2-400-FSE	72	37
BD2-1250-FSE	130	66

For tap-off units

BD2-AK1-IP55

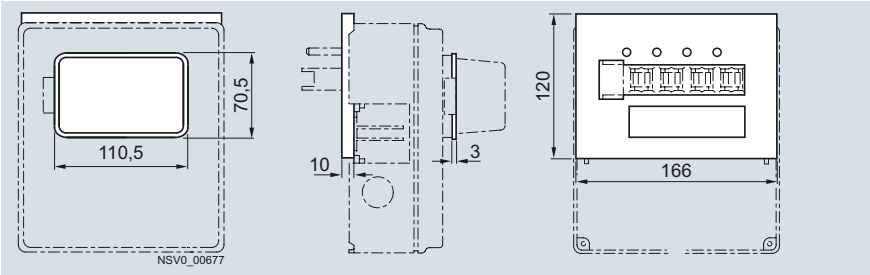

BD2-AK02-IP55, BD2-AK03-IP55

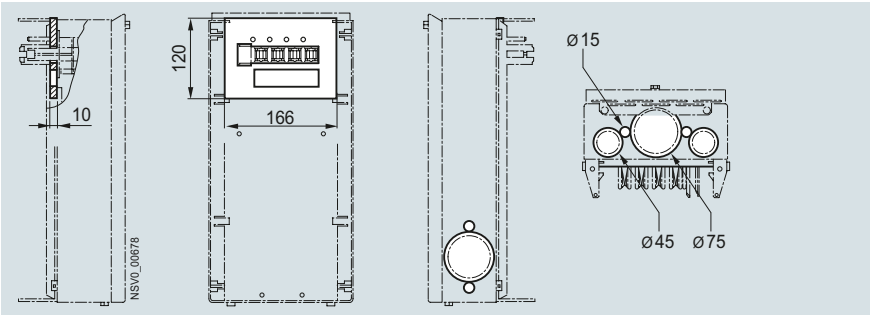

BD2-AK2X-IP55, BD2-AK3X-IP55

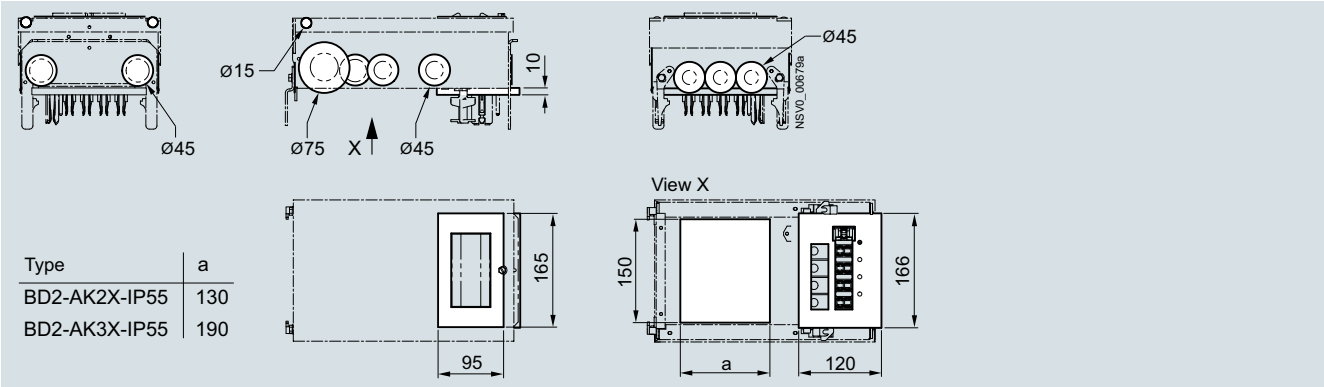

Type	a
BD2-AK2X-IP55	130
BD2-AK3X-IP55	190

Socket outlets including accessories

Socket outlets with adapter enclosure

BD2-CEE

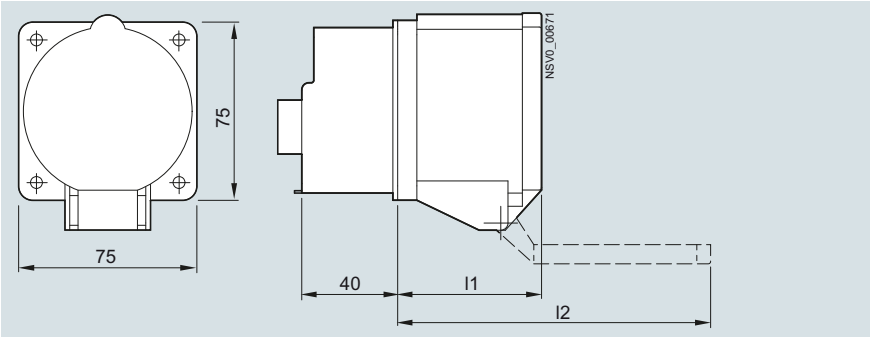

BD2-SD163

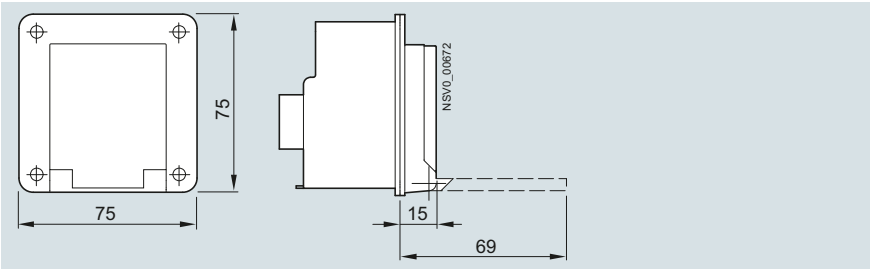

Adapter enclosures

BD2-AG

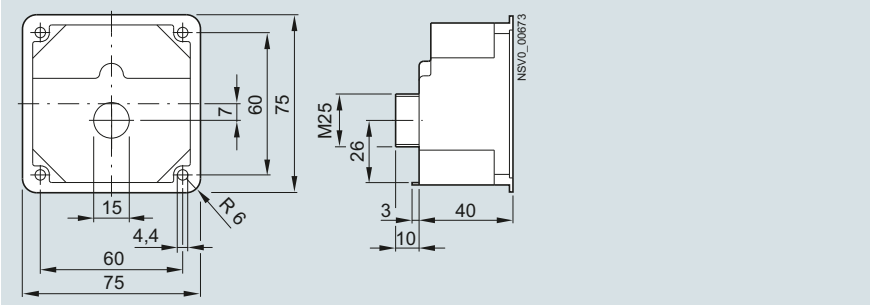

Adapter plates

BD2-APM

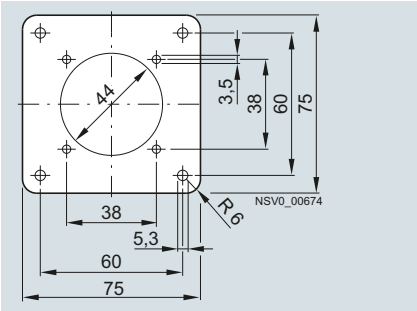

BD2-APO

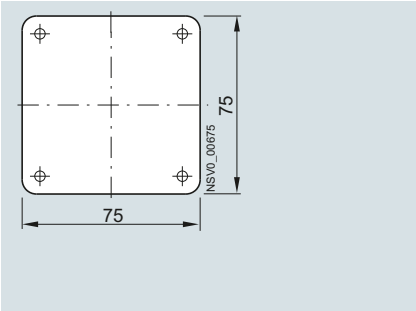

	Mennekes 1668	Mennekes 3385	BALS - 132002
	BD2-CEE163	BD2-CEE165	BD2-CEE325
l1	53	54	60
l2	110	110	130

Appendix

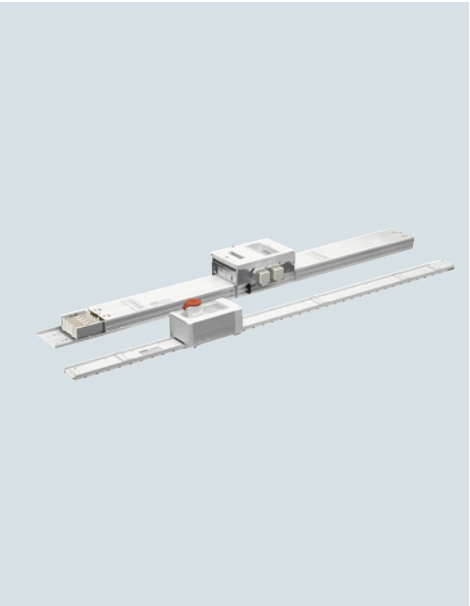

Glossary

Overview

This glossary offers brief explanations of some of the terms used in this catalog. As there are different opinions concerning the new terms used in IEC/EN 60947, we recommend to look up the wording of the corresponding standard.

Reference is made underneath each term to the relevant standard, e.g. IEC/EN 60947-1. Additionally, IEV numbers are stated in order to enable you to find foreign language equivalents in the electrotechnical dictionary (IEC 50: International Electrotechnical Vocabulary), e.g. IEV 441-17-31.

Altitude	The density of air decreases with increasing altitude, and this reduces its insulating capacity as well as its heat transfer capability. The **rated operational voltage** and **rated operational current** of switching devices, conductors and motors as well as the tripping behavior of thermal overload relays are affected by this. Upon request, Siemens will supply information as to the suitability of switching devices for operation at altitudes above the 2000 m limit specified by the standard. Or get in direct touch with Technical Support (see page 5/17).
Ambient temperature, enclosed (see also IEV 441-11-13)	Temperature at which the switching device is capable of being operated within a closed enclosure. For this purpose, it must be taken into account that the **power losses** of the switching device will add to the internal temperature rise within the enclosure.
Ambient temperature, open (see also IEV 441-11-13)	Room temperature (e.g. of the workshop or switchroom) in which the switching device is located.
Back-of-hand proof (see also EN 50274; 3.9)	A switching device whose live parts cannot be touched by a sphere of 50 mm diameter is regarded as back-of-hand proof.
Clearance (see also IEC/EN 60947-1; 2.5.46/IEV 441-17-31)	The distance between two conductive parts along a string stretched the shortest way between these conductive parts. The clearance is determined by the **rated impulse withstand voltage**, **overvoltage category** and the **pollution degree**.
Control circuit reliability	Measures the probability of switching states arising during the endurance of a switching contact that would be interpreted as faults by downstream electronic controllers (PLCs). Control circuit reliability is expressed in values based on tests using standard limit values for signals according to IEC/EN 61131-2.
Creepage distance (see also IEC/EN 60947-1; 2.5.51/IEV 151-03-37)	The shortest distance along the surface of an insulating material between two conductive parts. The creepage distance is determined by the **rated insulation voltage**, the **pollution degree** and the creepage current resistance of the material used.
Damp heat, constant	This test subjects the switching device to an ambient temperature of 40 °C at a constant humidity of 93%. At set intervals during the test, the electrical and mechanical function of the switching device are examined.
Damp heat, cyclic	This test subjects the equipment to cyclically changing climatic conditions. A cycle applies 40 °C ambient temperature at 93% relative humidity for 12 hours, followed by 12 hours of 25 °C at 95%. At set intervals during the test, the electrical and mechanical function of the switching device are examined.
(Electrically) protective separation (see also IEC/EN 61140; 3.24)	Isolation of circuits with non-touch-critical voltages, e.g. protective extra-low voltage, from circuits with touch-critical voltages. Such isolation is achieved by means of reinforced or double insulation, which reliably prevents voltage transfer from one circuit to another, e.g. between main circuits and auxiliary circuits in switching devices or between the primary and secondary side of safety transformers. Safe isolation is a priority requirement for safety circuits and functional low-voltage circuits.
EMERGENCY-STOP switching device	Switching device with an EMERGENCY-STOP device that is intended to prevent danger to persons, damage to machinery or work materials.
Finger-safety (see also EN 50274; 3.8)	A switching device whose live parts cannot be touched by the operator during actuation is termed finger-safe. This also applies for operator activity on neighboring switching devices. The finger-safe area of a push-actuated electrical equipment is a circular area of at least 30 mm radius around the actuator, and vertical to the direction of actuation. Within this circular area, touch-critical parts must be located at not less than 80 mm below the actuating level.
Isolating function (see also IEC/EN 60947-1; 2.1.19)	Equipment is deemed to possess this isolating function provided their switching contacts, when in the open position, achieve the separation distance prescribed for the isolation of electrical circuits, and their **clearance and creepage distances** are of the required size. The power supply to the entire installation or a section of the installation can thus be cut off for safety reasons, e.g. during maintenance.

Pollution degree
(see also IEC/EN 60947-1; 5.5.58)

Numeral characterizing the expected quantities of conductive dust and humidity, which can lead to a reduction in the dielectric strength of a switching device. The pollution degree is defined by the following factors:
- Pollution degree 1:
  No pollution or only dry, non-conductive pollution occurs. The pollution has no effect on the proof voltage.
- Pollution degree 2:
  Usually, only non-conductive pollution. However, transient conductivity through condensation is to be expected.
- Pollution degree 3: (switchgear for industrial use) Conductive pollution or dry, non-conductive pollution, which is rendered conductive through condensation.
- Pollution degree 4:
  The pollution leads to long-term conductivity, e.g. pollution through conductive dust, rain or snow.

Positive opening operation
(see also IEC/EN 60947-1; 2.4.10 / IEV 441-16-11)

An opening operation which, in accordance with specified requirements, ensures that all the main contacts are in the open position when the actuator is in the position corresponding to the open position of the device.

Positive or
enforced operation/actuation

This describes an arrangement where a link between the actuator and the contact member ensures that the force exerted on the actuator is transferred directly (without the intervention of sprung parts) onto the contact member.

Positively driven operation
(see also IEC/EN 60947-1; 2.4.11 / IEV 441-16-12)

This ensures that the auxiliary contacts of a switching device are always in the switch position corresponding to the open or closed position of the main contacts. The contacts of contactors are positively driven contacts, provided they are mechanically linked in such a way as to ensure that normally closed contacts and normally open contacts can never be closed simultaneously. This arrangement must also ensure that minimum contact separation of 0.5 mm is maintained over the entire endurance of the device, even during a fault (e.g. welding of one contact). The pertinent German Trade Association requires the use of contactors with positively driven contacts for control systems on power presses in the metal processing industry.

Protection against accidental direct contact
(see also EN 50274; 3.4)

Design measures incorporated into equipment in order to prevent direct contact (i.e. without tools) with live parts of a system (**finger-safe, back-of-hand proof**).

Shock resistance

The capacity of a switching device to withstand pulse-like motions without changing its operating state or sustaining damage. No contact lifting must take place on devices in the On position, the main contacts must not knock against one another in the Off position. A protective switch must not trip, and auxiliary switches must not change their switching state.

Tamper-proof

An **EMERGENCY-STOP switching device** is regarded as tamper-proof provided it cannot be reset without tools or via prescribed procedure, after tripping has taken place. The device latches in the tripped position. Accidental or deliberate manipulation (inching) is ruled out.

Type of coordination

Status of a switchgear/controlgear assembly (motor starter) during and after testing at rated conditional short-circuit current:
- Type of coordination 1:
  - No risk to persons or installations
  - No requirement for immediate readiness for renewed operation
  - Damage to the starter is admissible
- Type of coordination 2:
  - No risk to persons or installations
  - Starter is capable of renewed operation
  - No damage to the starter with the exception of a slight welding of the switching contacts, provided they can be separated without significant deformation

Utilization category
(see also IEC/EN 60947-1; 2.1.18/IEV 441-17-19)

A combination of specified requirements related to the conditions in which the switching device or the fuse fulfills its purpose, selected to represent a characteristic group of practical applications. The specified requirements may concern e.g. the values of making capacities (if applicable), breaking capacities and other characteristics, the associated circuits and the relevant conditions of use and behavior.

Glossary

Voltages, currents, powers, switching times

Break time (see also IEC/EN 60947-1; 2.5.42/IEV 441-17-39)	Interval of time between the beginning of the opening time of a mechanical switching device (or the pre-arcing time of a fuse) and the end of the arcing time.
Closing time (see also IEC/EN 60947-1; 2.5.44/IEV 441-17-41)	The time interval between the instant of initiation of the closing movement and the instant when the contacts touch in all poles.
Conventional thermal current I_{th} (see also IEC/EN 60947-1; 4.3.2.1)	The maximum value of current that a switching device is capable of carrying for a minimum of 8 hours without thermal overloading. As a rule, it corresponds to the maximum rated operational current.
Losses (see also IEV 151-03-18)	The difference between the input power and the output power of electrical equipment. The main type of loss in switching devices and electrical equipment in power distribution is current heat loss.
Make time (see also IEC/EN 60947-1; 2.5.43/IEV 441-17-40)	The interval of time between the initiation of the closing operation and the instant when the current begins to flow in the main circuit.
Minimum command duration	Minimum period of time for which a trip-initiating factor (control pulse, short-circuit current) must be present in order to effect the corresponding reaction, e.g. the short-circuit duration necessary to initiate tripping.
Opening time (see also IEC/EN 60947-1; 2.5.39/IEV 441-17-36)	The interval of time between the specified instant of initiation of the opening operation and the instant when the arcing contacts have separated in all poles.
Overvoltage category (see also IEC/EN 60947-1; 2.5.60)	Conventional number for overvoltages that might be caused, for example, as a result of lightning or switching operations. The overvoltage category applicable to industrial switchgear is III. The applicability of switchgear according to the overvoltage categories is as follows: • Overvoltage category IV: Use directly at the termination point of the installation (directly affected by any lightning), e.g. at an overhead-line connection point. • Overvoltage category III: Electrical equipment with special requirements as to the serviceability for connection in fixed installations which are protected by surge arresting measures, e.g. switches in low-voltage distribution systems or in control systems for industrial use. • Overvoltage category II: Power loads for connection to fixed installations, e.g. household appliances, electrical tools. • Overvoltage category I: Electrical equipment for connection to circuits with overvoltage protective devices, e.g. electronic devices.
Rated breaking capacity (see also IEC/EN 60947-1; 4.3.5.3)	The rms value that a switching device is capable of breaking according to its **utilization category**. This value refers to the **rated operational voltage** and the **rated operational current**. A switching device must be capable of breaking any value of current up to and including its rated breaking capacity stated.
Rated conditional short-circuit current I_q (see also IEC/EN 60947-1; 2.5.29/IEV 441-17-20)	The short-circuit current that a switching device, e.g. a power contactor, protected by a short-circuit protective device such as a motor starter protector, can carry for the duration of the tripping delay of the protective device.
Rated control supply voltage U_s (see also IEC/EN 60947-1; 4.5.1)	The voltage applied to the input terminals of the control circuit of a switching device. Due to the presence in the control circuit of transformers or resistors, this voltage may differ from the **rated actuating voltage**.
Rated current I_n (of a circuit breaker) (see also IEC/EN 60947-2; 4.3.2.3)	For circuit breakers, this current value is equal to the **rated uninterrupted current** and the **conventional free-air thermal current**.
Rated frequency (see also IEC/EN 60947-1; 4.3.3)	The supply frequency for which an equipment is designed and to which the other characteristic values correspond.
Rated impulse withstand voltage U_{imp} (see also IEC/EN 60947-1; 4.3.1.3)	Measures the stability of the internal clearances of a switching device against overvoltage peaks. The utilization of suitable switchgear can ensure that overvoltages are prevented from being transmitted from the mains to de-energized system components within it.
Rated insulation voltage U_i (see also IEC/EN 60947-1; 4.3.1.2)	The value of voltage to which dielectric tests and **creepage distances** are referred. The maximum rated operational voltage must not be higher than the **rated insulation voltage**.
Rated making capacity (see also IEC/EN 60947-1; 4.3.5.2)	The value of current that a switching device is capable of making in accordance with the **utilization category** and the **rated operational voltage**.

Rated operational current I_e
(see also IEC/EN 60947-1; 4.3.2.3)

The current that a switching device is capable of carrying, taking into account the rated operational voltage, duration of operation, utilization category and ambient temperature.

Rated operational power
(see also IEC/EN 60947-1; 4.3.2.3)

The operational power that a switching device is capable of switching at the associated **rated operational voltage** in accordance with the utilization category, e.g. contactor utilization category AC-3: 37 kW at 400 V.

Rated operational voltage U_c
(see also IEC/EN 60947-1; 4.5.1)

The voltage which is applied to the actuating make contact in a control circuit. Due to the presence in the control circuit of transformers or resistors, this voltage may differ from the **rated control supply voltage**.

Rated operational voltage U_e
(see also IEC/EN 60947-1; 4.3.1.1)

The voltage to which the characteristics of a switching device are referred. The highest **rated operational voltage** must not be higher than the **rated insulation voltage**.

Rated power
(see also IEC/EN 60947-1; 4.3.2.3)

The power output of a motor at the associated **rated operational voltage**.

Rated service short-circuit breaking capacity I_{cs}
(see also IEC/EN 60947-2; 4.3.5.2.2)

The prospective short-circuit current which, depending on the **rated operational voltage**, a circuit breaker is capable of breaking repeatedly (test cycle O-CO-CO, previously P-2). After interrupting this short-circuit current value, the circuit breaker must be capable of continuing to carry and disconnect in the event of overloading, the **rated uninterrupted current**, despite its own thermal level having increased.

Rated short-circuit breaking capacity I_{cn}
(see also IEC/EN 60947-1; 4.3.6.3)

The maximum value of current that a switching device is capable of breaking at rated operational voltage and rated frequency, and without sustaining damage. It is specified as an rms value.

Rated short-circuit making capacity I_{cm}
(see also IEC/EN 60947-1; 4.3.6.2)

The maximum value of current that a switching device is capable of making at rated operational voltage and rated frequency, and without sustaining damage. Unlike other characteristic data, this is specified as a peak value.

Rated short-time withstand current I_{cw}
(see also IEC/EN 60947-1; 4.3.6.1)

The short-time withstand current value that the switching device is capable of carrying for a specified time without damage, e.g. due to excessive heating.

Rated ultimate short-circuit breaking capacity I_{cu}
(see also IEC/EN 60947-2; 4.3.5.2.1)

Maximum short-circuit current which a circuit breaker is capable of interrupting (test: O.-CO, previously P-1). Following short-circuit tripping, the circuit breaker is able, in the event of overload, to trip with increased tolerances.

Rated uninterrupted current I_u
(see also IEC/EN 60947-1; 4.3.2.4)

The value of current that a switching device can carry in uninterrupted duty (for weeks, months or years).

Symbols used in technical data and formulae

ED	ON period
$I_{\Delta n}$	Response value of ground-fault release
I_{cm}	Rated short-circuit making capacity
I_{cn}	Rated short-circuit breaking capacity
I_{cs}	Rated service short-circuit breaking capacity
I_{cu}	Rated ultimate short-circuit breaking capacity
I_{cw}	Rated short-time withstand current
I_e	Rated operational current
i	Transformer initial short-circuit current
I_L	Response value for load monitoring
I_n	Rated current
I_{NT}	Rated transformer current
I_{PK}	Rated peak withstand current
I_q	Rated conditional short-circuit current
I_r	Set value of overcurrent release
I_{rm}	Response value of instantaneous short-circuit release
I_T	Response value of ground-fault release
I_{th}	Conventional free-air thermal current
I_{the}	Conventional thermal current of enclosed devices
I_u	Rated uninterrupted current
S_{NT}	Transformer rating
t_r	Delay time of overload release response
t_T	Delay time of ground-fault release response
t_v	Delay time of short-circuit release response
I_{rmf}	Response value of fixed, instantaneous short-circuit release
I_{rmv}	Response value of short-time delay short-circuit release
U_c	Rated actuating voltage
U_e	Rated operational voltage
U_i	Rated insulation voltage
U_{im}	Rated impulse withstand voltage
u_k	Transformer short-circuit voltage
U_s	Rated control supply voltage

Overview

Trademarks

All product designations may be registered trademarks or product names of Siemens AG or supplier companies whose use by third parties for their own purposes may violate the rights of the owner.

Amendments

Unless stated otherwise on the individual pages of this catalog, we reserve the right to make changes, in particular to the specified values, measurements and weights.

Dimensions

All dimensions are given in mm.

Illustrations

The illustrations are not binding.

Technical specifications

The technical specifications are for general information purposes only. Always heed the operating instructions and notices on individual products during assembly, operation and maintenance.

Further technical information is available at
www.siemens.com/lowvoltage/product-support

- under "Entry type":
  - Application example
  - Certificate
  - Characteristic
  - Download
  - FAQ
  - Manual
  - Product note
  - Software archive
  - Technical data

Configurators can be found at
www.siemens.com/lowvoltage/configurators

Assembly, operation and maintenance

Always heed the operating instructions and notices on individual products during assembly, operation and maintenance.

Logistics

General

With regard to delivery service, communications and environmental protection, our logistics service ensures "quality from the moment of ordering right through to delivery". By designing our infrastructure according to customer requirements and implementing electronic order processing, we have successfully optimized our logistics processes.

We are proud of our personal consulting service, on-time deliveries and one-day transport within Germany.

To this end, we supply preferred types marked with ► ex works.

We regard the ISO 9001 certification and consistent quality checks as an integral part of our services.

Electronic order processing is fast, cost-efficient and error-free. Please contact us if you want to benefit from these advantages.

Packaging, packing units

The packaging in which our equipment is dispatched provides protection against dust and mechanical damage during transport, thus ensuring that all our products arrive in perfect condition.

We select our packaging for maximum environmental compatibility and reusability (e.g. crumpled paper for protection during transport in packages up to 32 kg) and, in particular, with a view to reducing waste.

With our multi-unit and reusable packaging, we offer you specific types of packaging that are both kind to the environment and tailored to your requirements:

Your advantages at a glance:

- Lower ordering costs
- Cost savings through same-material type packaging: low/no disposal costs
- Reduced time and cost thanks to short unpacking times
- "Just-in-time" delivery directly to the production line helps reduce stock: cost savings through reduction of storage areas
- Fast assembly thanks to supply in sets
- Standard Euro boxes, corresponding to the Euro pallet modular system, suitable for most conveyor systems
- Active contribution to environmental protection

Unless stated otherwise in the "Selection and ordering data" of this catalog, our products are supplied individually packed.

For small parts/accessories, we offer you cost-effective packaging units as standard packs containing more than one item, e.g. 5, 10, 50 or 100 units. It is essential that whole number multiples of these quantities be ordered to ensure satisfactory quality of the products and problem-free order processing.

The products are delivered in a neutral carton. The label includes warning notices, the CE marking, and device descriptions in English and German.

In addition to the Article No. (MLFB) and the number of items in the packaging, the operating instructions article number (Instr.-Order-No.) is also specified. It can be obtained from your local Siemens representative (for a list of your Siemens contacts, see www.siemens.com/lowvoltage/contact).

Most device Article No.'s can be obtained by means of the EAN barcode to simplify ordering and storage logistics.

The associated master data, too, is available from your local Siemens representative.

Aluminum (Al) and copper (Cu) surcharges

Surcharges for aluminum (Al) and copper (Cu) will be added to the prices of certain products. Calculation of the surcharges will be governed by the official Al quotation for aluminum and by the Cu-DEL quotation applying on the date of receipt of order or of call-off.

The prices for products in this catalog include the price of aluminum and copper calculated on the basis of a list price of €150/100 kg. If the aluminum and copper rates exceed this price, a surcharge will be made on the basis of the DEL quotation in force on the day of delivery.

Equation for calculating Al and Cu surcharges:

$$\frac{\text{Cu-DEL quotation or Al quotation € – 150 €}}{\text{100 kg}} \times \text{Cu/Al weight (kg)}$$

The quotations for copper and aluminum can be consulted daily on the Internet:

www.kabelverband.org

See "Aktuelle Metall-Notierungen" there, then:

- "KUPFER DEL-Notiz / hoch" (copper)
- "ALU in Kabeln" (aluminum)

Selection and ordering data

The article number and the type designation must be quoted in all orders.

Article number

When ordering the busbar trunking systems BD01 and BD2, the prefix BVP: must be placed before the article number listed in the catalog, for example: BVP:034262.

Type

If a type designation contains * characters, it is not complete (e.g. in case of variable lengths) and must be supplemented according to specifications in the table. In this case, the article number is not unique.

Ordering notes

Overview

Ordering special versions

When ordering products that differ from the standard versions listed in the catalog, **"–Z"** must be added to the Article No. indicated and the required features must be specified using alphanumeric order codes or plain text.

Ordering very small quantities

When very small orders are placed, the costs associated with order processing are greater than the order value. We therefore recommend that you combine several small orders. Where this is not possible, we regret that we are obliged to make a small processing charge: for orders with a net goods value of less than € 250 we charge a € 20 supplement to cover our order processing and invoicing costs.

Explanations of Selection and ordering data

Standard delivery time (SD)

SD in days (d)	The standard delivery times (SD) are valid ex works from Siemens AG (products ready for dispatch). Shipping times depend on the destination and the method of shipping. The standard shipping time for Germany is one day.	The specified standard delivery times are correct at the time of going to print and are subject to constant optimization. Up-to-date information can be found at www.siemens.com/industrymall
X On request	In such cases, the delivery time can be queried.	

Price

The specified price in € refers to the price unit (PU).

Price units (PU)

The price unit defines the number of units, sets or meters to which the specified price applies.

Packaging size (PS)

The packaging size defines the number of units, sets or meters, for example, for outer packaging.

Only the quantity defined by the packaging size or a multiple thereof can be ordered.

Price group (PG)

Each product is allocated to a price group.

Example

BVP:203532

SD: 11 working days
Price: 10 units (= PS) cost €99.--
(1 unit costs €9.90)
PG: 13X
Ordering quantity 10 units or a multiple thereof

SD d	Type	Article No.	PS*/ P. unit	Weight
X	**BD2-DSB**	**BVP:203532**	10 units	0.030

Notes:
The article numbers shown here and the specifications regarding selection and ordering data are examples only. When ordering, always use the selection and ordering data in the product chapters.

Metal surcharges/export markings

To compensate fluctuating prices of raw materials (for example silver, copper, aluminum, lead, gold, dysprosium and neodymium), surcharges are calculated on a daily basis for products containing these raw materials using the metal factor.

A surcharge for the particular raw material is added to the price of a product if the basic quotations for this raw material are exceeded

Each product's metal factor dictates for which raw materials the metal surcharges are calculated, from which quotation and with which calculation method (weight or percentage method).

An exact explanation of the metal factor can be found at:

www.siemens.com/automation/salesmaterial-as/catalog/en/

A product's export markings/metal surcharges are updated daily at www.siemens.com/industrymall.

Low-Voltage Power Distribution and Electrical Installation Technology on the WWW

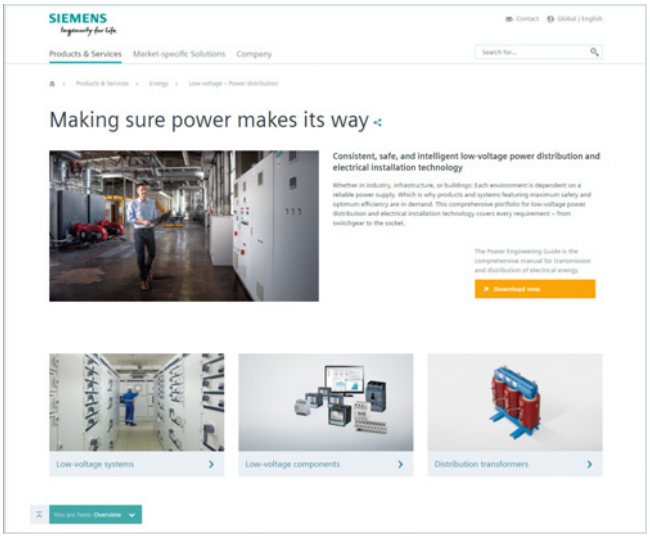

On the Internet you will find a host of information all about low-voltage power distribution and electrical installation technology products, such as:

- Overview of our product portfolio
- Background information, news and dates
- Videos, podcasts and newsletters
- Links to blogs and Twitter
- Brochures, catalogs, operating instructions and manuals for direct download

Visit us online and get to know our product range!

www.siemens.com/lowvoltage

Product selection using the interactive catalog CA 01

Detailed information together with user-friendly interactive functions

The interactive catalog CA 01 covers more than 100 000 products, thus providing a comprehensive overview of the product range provided by Siemens.

You can find everything you need here for solving automation, switching, installation and drive technology tasks. All information is provided over a user interface that is both user-friendly and intuitive.

Information about the interactive catalog CA 01 can be found on the Internet at:

www.siemens.com/automation/ca01

or on DVD.

Industry Mall

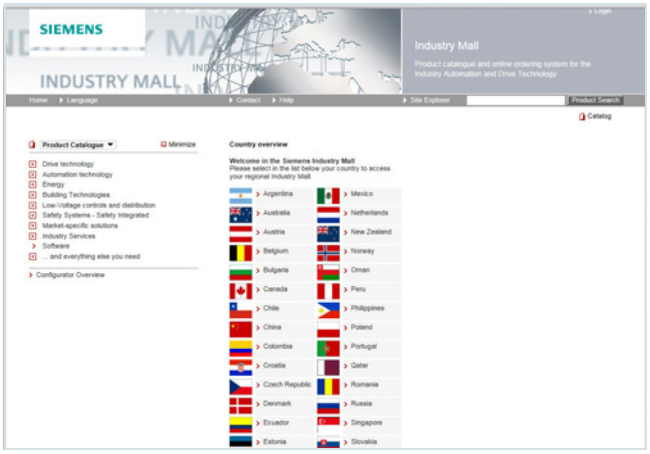

The Industry Mall – for online information, product selection and ordering

- Detailed information including product data, illustrations, certificates and CAx data
- Simple configuring of systems
- Possible to request individualized quotations
- Availability check
- Online ordering facility
- Order tracking/order overview
- Fast access to relevant training offers and services

You can find the Industry Mall on the Internet at

www.siemens.com/industrymall

Further documentation

Industry Online Support

Comprehensive support – at any time, whatever your location

- FAQs, sample applications, information about successor products and product news
- Prompt assistance with technical queries
- Discussions and best practice sharing with other users in the forum
- Provision of high-quality product data for your planning programs
- Faster access to information – with helpful filter and folder functions in mySupport
- Automatic notification service to keep you up to date with the latest information about topics of interest to you

You can find Siemens Industry Online Support on the Internet at:

www.siemens.com/online-support

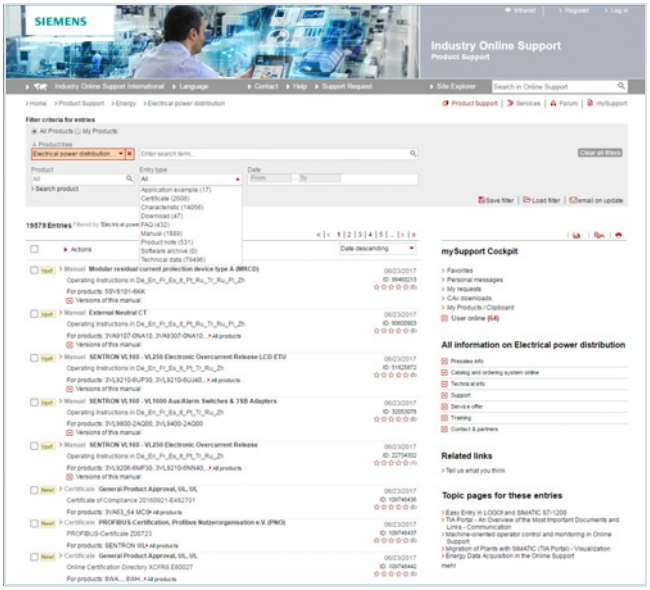

In the "Entry type" selection box in Product Support, you will find the following:

- Application example
- Certificate
- Characteristic
- Download
- FAQ
- Manual
- Product note
- Software archive
- Technical data

www.siemens.com/lowvoltage/product-support

In addition, the Low-Voltage Power Distribution and Electrical Installation Technology catalogs are also available there.

www.siemens.com/lowvoltage/catalogs

Industry Online Support App

Main functions at a glance

- Scanning of product codes (EAN/QR and data matrix codes) with direct display of all technical information on the product, including graphic data (CAx data).
- Delivery of product information or entries by email, so that the information can immediately be processed at the workplace.
- Submission of queries to Technical Support (Support Requests). With photo function for transmitting detailed information.
- Contents and interfaces available in 6 languages (German, English, French, Italian, Spanish and Chinese) – including option of temporary switchover to English.
- Offline cache function for all favorites stored in "mySupport". These entries can also be retrieved without network reception.
- Import of PDF documents into a library (e.g. iBooks or similar).

You can find information on the Industry Online Support App on the Internet at

https://new.siemens.com/global/en/products/software/mobile-apps/industry-online-support.html

SIEMENS

Android:

GET IT ON Google Play

Industry Online Support App ANDROID

Apple iOS:

Download on the App Store

Industry Online Support App iOS

Windows:

Get it from Microsoft

Industry Online Support App WINDOWS

Further documentation

Product configurator

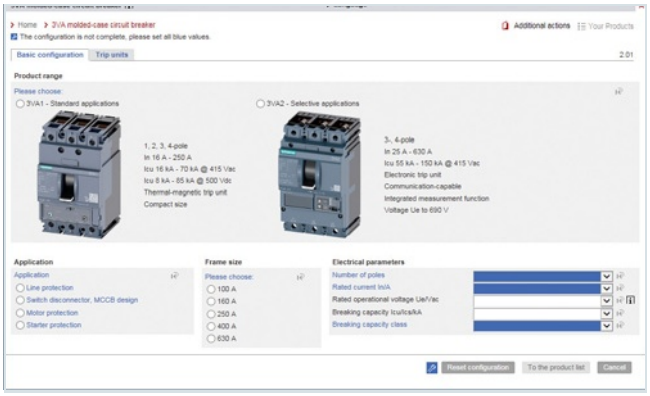

Finding the right product faster

- Complete selection of products and systems based on technical characteristics or application requirements
- Simple, intuitive operation
- Option to save the configuration and order lists in a file format of your choice (txt, pdf, xls, csv)
- Direct transfer of the order list into the shopping cart of the Siemens Industry Mall
- Fast access to product data, diagrams, certificates and CAx data for the selected product and system configuration
- Available in multiple languages for use by customers anywhere in the world

The configurators are available online in the Siemens Industry Mall and offline in Catalog CA 01.
You can find our configurators at the following website:

www.siemens.com/lowvoltage/configurators

CAx Download Manager

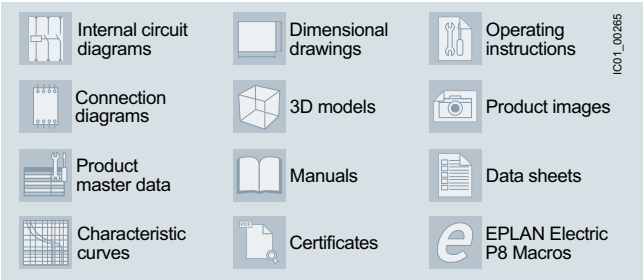

You can find the CAx Download Manager on the Internet at

www.siemens.com/lowvoltage/cax

Time savings of up to 80% with universal product data for your CAE and CAD systems

The CAx Download Manager can supply you with all the necessary CAx file types for the products of your choice for use in all common CAE and CAD systems. The data contained in the files is continuously updated. The whole process involves only four selection steps and is free of charge. All your selected files are packed into a zip file which you can download for further use.

Siemens makes available up to 12 file types to support your mechanical (CAD) and electrical (CAE) planning processes for you to download at any time of the day.

- No manual data collection necessary
- Universal manufacturer data for all common CAE and CAD systems
- Standardized documentation is simple to generate
- Choice of different languages for system commissioning anywhere in the world

My Documentation Manager

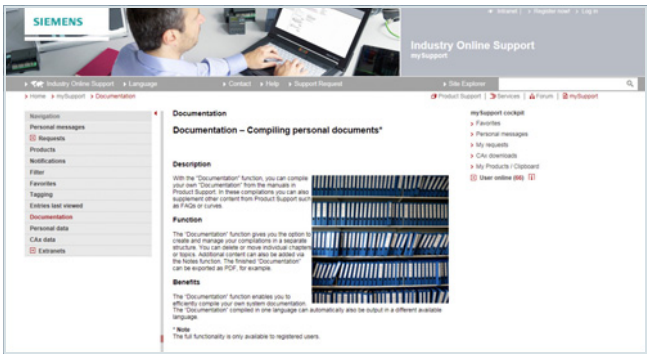

In "mySupport" you can compile individual documentation for your project by dragging and dropping

* e.g. Low Voltage Directive 2006/95/EC and EC Machinery Directive 2006/42/EC

You can find My Documentation Manager on the Internet at

www.siemens.com/lowvoltage/mdm

User-friendly compilation of project-specific documentation

In accordance with directives*, the documentation is part of the plant and requires certification, thus giving the purchaser the right to full plant documentation.

To support you in this, a manual configurator has been developed with which you can put together individual and standard-compliant documentation – fully in accordance with the relevant project-specific requirements.

You can thus select the chapters relevant to the respective project from the available manuals of the installed Siemens components. FAQs, certificates, data sheets and your own content can also be incorporated.

- Compile and structure manuals, data sheets, FAQs and certificates simply by dragging and dropping
- Insert personalized content via the Notes function
- Further processing possible thanks to selectable export formats (pdf, xml, rtf)
- After generating the documentation, automatic translation into the desired language is possible
- Always up-to-the minute thanks to the Update function

Overview

The quality management system of our "Low Voltage & Products" Business Unit in the "Energy Management" Division complies with the international EN ISO 9001 standard.

The products and systems listed in this catalog are developed and manufactured using a certified quality management system in accordance with EN ISO 9001:2008.

Standards and approvals

Overview

Certificates

An overview, updated on a daily basis, of our products certified in accordance with CE, UL, CSA, FM, shipping authorizations etc. for low-voltage power distribution and electrical installation products can be found on the Internet at

www.siemens.com/lowvoltage/certificates

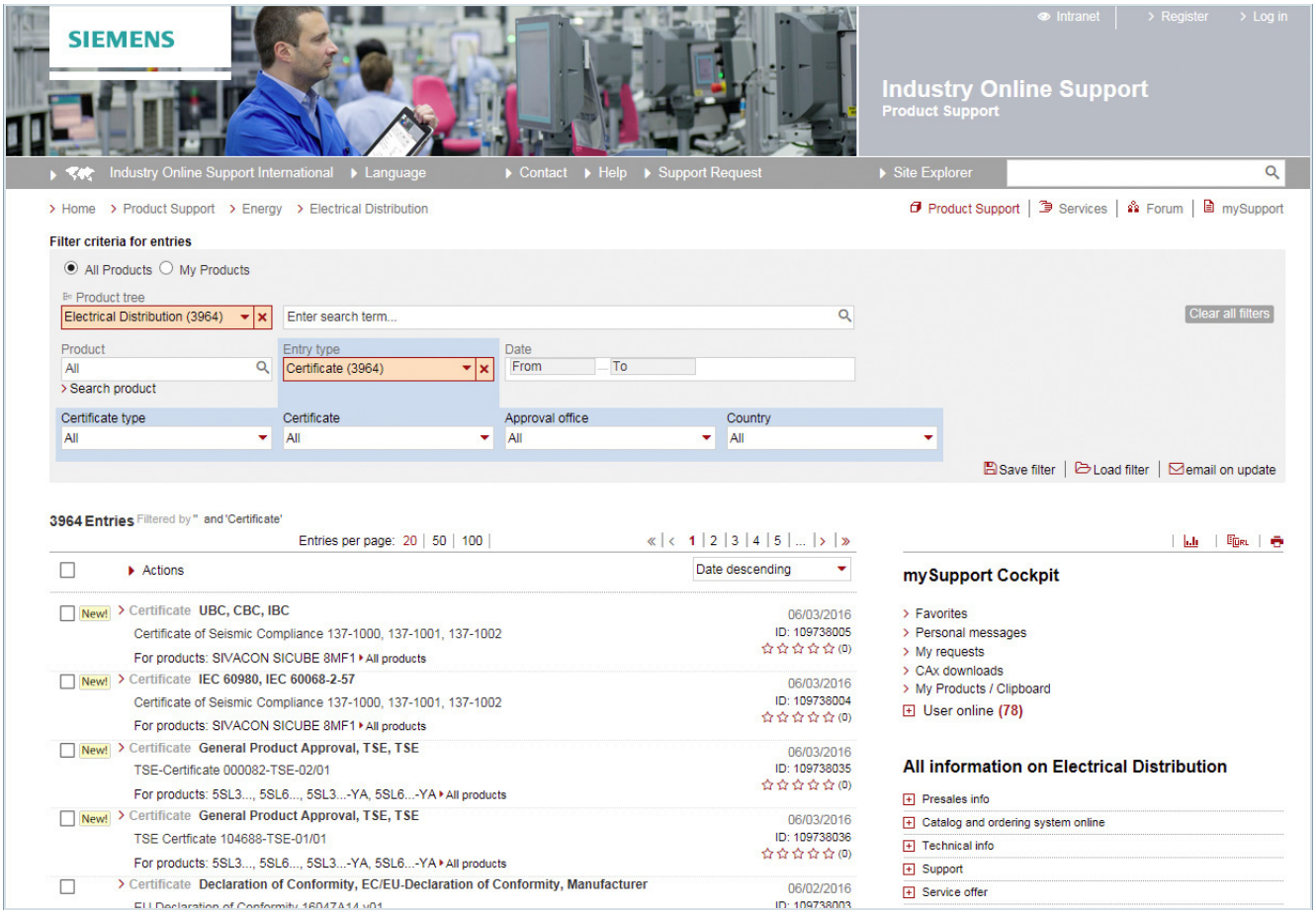

In the **Entry list**, you can **filter the view** in order to quickly find comprehensive information on the following subjects:

- Product or search term
- Date
- Type of certificate (general product approval, test certificates, shipping approval, ...)
- Certificate (confirmations, UL, VDE,...)
- Approval office (TÜV, VDE, UL, ...)
- Country

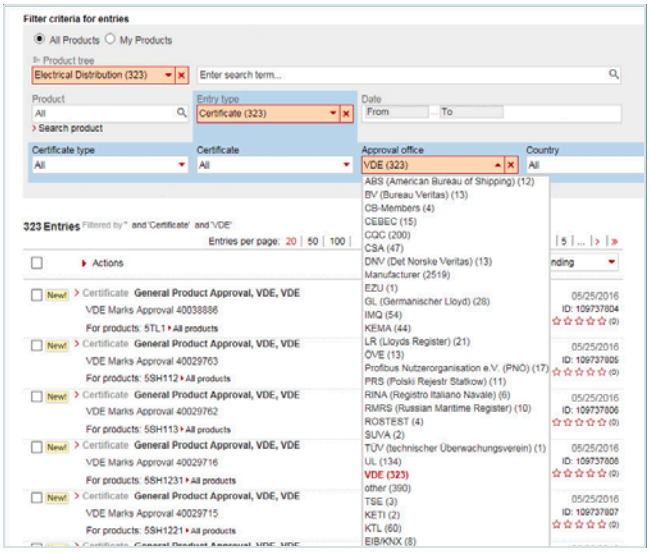

Approval requirements valid in different countries

Siemens low-voltage switchgear and controlgear are designed, manufactured and tested according to the relevant German standards (DIN and VDE), IEC publications and European standards (EN) as well as CSA and UL standards. You will find the standards assigned to the single devices in the relevant certificates at

www.siemens.com/lowvoltage/certificates

In addition to the pertinent VDE, EN and IEC standards, the requirements of the various regulations valid in other countries have also been taken into account in the design of the equipment in some cases, in order that the devices can be deployed globally as far as possible.

In some countries an approval is required for certain low-voltage switchgear and controlgear components. Depending on the market requirements, these devices have been submitted for approval to the authorized testing institutes.

In some cases, CSA for Canada and UL for the USA only approve special versions. Such special versions are listed separately from the standard versions in the relevant parts of this catalog.

For this equipment, there are sometimes limits with regard to the maximum permissible voltages, currents and rated outputs or special approvals and, in some cases, special identification may be required.

For use on board ship, the specifications of the marine classification societies must be observed. In some cases, they require type tests of the components to be approved.

If you have any questions concerning UL/CSA approvals, please contact Technical Support:
www.siemens.com/lowvoltage/contact

Siemens contacts

Contacts for low-voltage power distribution and electrical installation technology

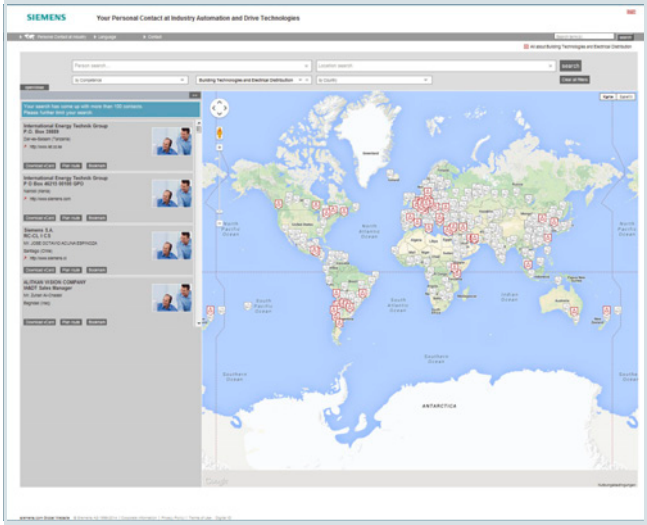

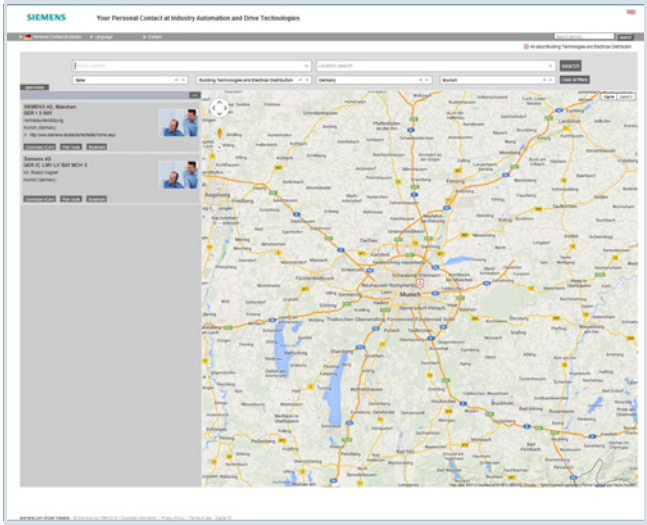

With low-voltage power distribution and electrical installation technology we consistently pursue one goal:

long-term improvement of your competitive ability.

We are committed to this goal. Thanks to our dedication, we are continually setting new standards. In all industries – worldwide.

At your service, locally, around the globe: partners for consulting, sales, training, service, support, spare parts ... on the entire range of low-voltage power distribution and electrical installation technology.

Your partner can be found in our Personal Contacts Database at:

www.siemens.com/lowvoltage/contact

You start by selecting a

- required competence
- product or sector
- country
- city

or by performing a

- search for a specific location or
- individual.

Unrivaled complete range of services over the entire life cycle

Online Support

Our comprehensive online information platform covers every aspect of our Service & Support and is available whenever, wherever.

You will find further information at
www.siemens.com/online-support
www.siemens.com/lowvoltage/product-support

Field Service

Siemens Field Service offers support with all aspects of maintenance – so that the availability of your machines and plants is assured whatever the case.

You will find further information at
www.siemens.com/lowvoltage/contact

Technical Support

The competent consulting service for technical issues with a broad range of customer-oriented services for all our products and systems.

Assistance with technical queries is provided at
www.siemens.com/lowvoltage/support-request
You can find your local contacts at
www.siemens.com/lowvoltage/contact

Spare Parts

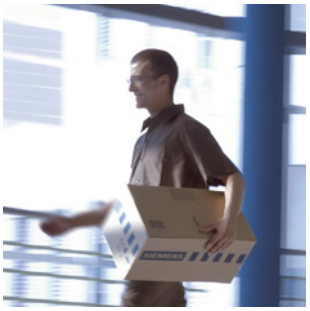

Plants and systems in all industries worldwide are expected to meet ever higher levels of availability.
We can help you rule out unexpected stoppages: with a global network and optimum logistics chains.

You will find further information at
www.siemens.com/lowvoltage/contact

Training

Extend your lead – with practice-related know-how straight from the manufacturer.

You will find further information at
www.siemens.com/lowvoltage/training

Specification texts

You can obtain qualified, free support to help you produce specifications for technically equipping non-residential and industrial buildings at
www.siemens.com/specifications

Comprehensive support from A to Z

Overview

Product information	
Website	Fast and targeted information on low-voltage power distribution and electrical installation technology: www.siemens.com/lowvoltage
Newsletter	Always up to date about our trend-setting products and systems: www.siemens.com/lowvoltage/newsletter
Product information/product & system selection	
Siemens Industry Online Support	Low-Voltage Power Distribution and Electrical Installation Technology catalogs www.siemens.com/lowvoltage/catalogs
Industry Mall	Comprehensive information and order platform for the Siemens Industry Basket: www.siemens.com/lowvoltage/mall
CA 01	Every product for automation and drive technology, Interactive Catalog, DVD
Product and system engineering	
SIMARIS software tools	Support in planning and configuring the electrical power distribution: www.siemens.com/simaris
SIMARIS configuration software	Support throughout the entire configuration cycle from the configuration of SIVACON S8 switchboards, ALPHA distribution boards, cost calculations and quotation preparation, right through to the creation of plant documentation: www.siemens.com/simarisconfig
Software for power loss calculations - SIMARIS therm	Support in performing power loss calculations for the dimensioning of control cabinets: www.siemens.com/simaristherm
Product documentation	
Siemens Industry Online Support	Comprehensive technical information – from planning to configuration and operation: www.siemens.com/online-support www.siemens.com/lowvoltage/product-support
Product configurator	Complete selection of products and systems based on technical characteristics or application requirements: www.siemens.com/lowvoltage/configurators
CAx Download Manager	Collation of CAx data types for standard CAE and CAD systems: www.siemens.com/lowvoltage/cax
My Documentation Manager	Compilation of project-specific documentation: www.siemens.com/lowvoltage/mdm
Image database	Collection of product photographs and graphics, such as dimensional drawings and internal circuit diagrams: www.siemens.com/lowvoltage/picturedb
Product training	
SITRAIN Portal	Comprehensive training program for our products, systems and engineering tools: www.siemens.com/lowvoltage/training
Product hotline	
Technical Support	Support in all technical queries about our products: www.siemens.com/lowvoltage/support-request

Type reference list

Conditions of sale and delivery

1. General standards

By using this catalog you can acquire hardware and software products described therein from Siemens AG subject to these conditions of sale and delivery (hereinafter: CSD). Please note: the scope, the quality and the conditions for supplies and services, including software products, by any Siemens group or Regional Company having a registered office outside of Germany, shall be subject exclusively to the General Terms and Conditions of the respective Siemens entity. These CSD apply exclusively for orders placed with Siemens AG, Germany.

1.1 For customers with a seat or registered office in Germany

For customers with a seat or registered office in Germany, the following shall be subordinate to these CSD

- for installation, the "Standard Terms and Conditions for Installation –Germany" and
- for Plant Analytics Services the "Standard Terms and Conditions for Plant Analytics Services – for Customers in Germany"[1)] and
- for other supplies and services, the "General Conditions for the Supply of Products and Services of the Electrical and Electronics Industry"[1)].
  In the event that such other supplies and services include open-source software, the conditions of which override the "General Conditions for the Supply of Products and Services of the Electrical and Electronics Industry"[1)], the product will be supplied with a notice detailing the special conditions that apply for the relevant open-source software. This applies accordingly in the case of a reference to other third-party software components.

1.2 For customers with a seat or registered office outside of Germany

For customers with a seat or registered office outside of Germany, the following shall be subordinate to these CSD

- for Plant Analytics Services the "Standard Terms and Conditions for Plant Analytics Services"[1)] (only available in English) and
- for services, the "International Terms & Conditions for Services"[1)] supplemented by the "Software Licensing Conditions"[1)] and
- for the supply of other hardware and software the "International Terms & Conditions for Products"[1)] supplemented by the "Software Licensing Conditions"[1)].

1.3 For customers with framework agreements

To the extent that our products and services are covered by an existing framework agreement, the conditions there apply instead of this CSD.

2. Prices

The prices are in € (euros) ex works, excluding packaging.

The sales tax (value added tax) is not included in the prices. It shall be debited separately at the respective rate according to the applicable legal regulations.

Prices are subject to change without prior notice. We will debit the prices valid at the time of delivery.

To compensate fluctuating prices of raw materials (for example silver, copper, aluminum, lead, gold, dysprosium and neodymium), surcharges are calculated on a daily basis for products containing these raw materials using the metal factor. A surcharge for the particular raw material is added to the price of a product if the basic quotations for this raw material are exceeded.

Each product's metal factor dictates for which raw materials the metal surcharges are calculated, from which quotation and with which calculation method (weight or percentage method).

An exact explanation of the metal factor can be found at: www.siemens.com/automation/salesmaterial-as/catalog/en/terms_of_trade_en.pdf

The surcharge will be calculated (except in the case of dysprosium and neodymium) on the basis of the official price on the day prior to receipt of the order or prior to the release order for calculation of the surcharge.

In the event of placement of an order, the relevant three-month average price from the quarter prior to order receipt or the release order shall be used with a one-month buffer to calculate the dysprosium and neodymium surcharge ("rare earths") (you will find details in the aforementioned explanation of the metal factor).

3. Additional terms and conditions

All dimensions are in mm. In Germany, according to the German law on units in metrology, data in inches only apply to devices for export.

Illustrations are not binding.

Insofar as there are no remarks on the corresponding pages of this catalog - especially with regard to data, dimensions and weights given - these are subject to change without prior notice.

[1)] You can download the text of the Siemens AG terms and conditions of trade at www.siemens.com/automation/salesmaterial-as/catalog/en/terms_of_trade_en.pdf

4. Export regulations

We shall not be obligated to fulfill this agreement if such fulfillment is prevented by any impediments arising out of national or international foreign trade or customs requirements or any embargoes or other sanctions.

Exporting may be subject to authorization. In delivery information, we label authorization obligations according to German, European and US export lists.

Our products are controlled by the U.S. authorities (goods labeled with "ECCN" not equal to "N") and may only be supplied to the stated country of the end user for sole use by the end user. Without U.S. government approval or other approval under U.S. law, the products may not be sold, transferred or otherwise forwarded to other countries or to other persons other than the specified end user, either in their original form or after further processing into other goods. Goods labeled with an "AL" not equal to "N" are subject European/national export authorization requirements.

Please note that you can also preview the export designations in the respective product description via our "Industry Mall" online catalog system. The deciding factors, however, are the AL or ECCN export designations indicated on order confirmations, delivery notes and invoices.

Unmarked items or items marked "AL:N" / "ECCN:N" or "AL:9X9999" / "ECCN: 9X9999" may require authorization based on their intended use or ultimate destination.

If you transfer goods (hardware and/or software and/or technology as well as corresponding documentation, regardless of the mode of provision) delivered by us or works and services (including all kinds of technical support) performed by us to a third party worldwide, you shall comply with all applicable national and international (re-) export control regulations.

If required to conduct export control checks, you, at our request, shall promptly provide us with all information pertaining to particular end customers, destination and intended use of goods, works and services provided by us, as well as any relevant export control restrictions.

The products listed in this catalog may be subject to European/German and/or US export regulations. Therefore, any export requiring a license is subject to approval by the competent authorities.

Errors excepted and subject to change without prior notice.

Notes

Notes

Notes

Catalogs

Digital Factory, Process Industries and Drives and Energy Management

Further information can be obtained from our branch offices listed at www.siemens.com/automation-contact

Interactive Catalog	*Catalog*
Products for Automation and Drives	**CA 01**

Building Control	
GAMMA Building Control	ET G1

Drive Systems	
SINAMICS G130 Drive Converter Chassis Units SINAMICS G150 Drive Converter Cabinet Units	D 11
Digital: SINAMICS PERFECT HARMONY GH180 Medium-Voltage Air-Cooled Drives (Germany Edition)	*D 15.1*
SINAMICS G180 Converters – Compact Units, Cabinet Systems, Cabinet Units Air-Cooled and Liquid-Cooled	D 18.1
SINAMICS S120 Chassis Format Converter Units SINAMICS S120 Cabinet Modules SINAMICS S150 Converter Cabinet Units	D 21.3
SINAMICS S120 and SIMOTICS	D 21.4
SINAMICS DCM DC Converter, Control Module	D 23.1
SINAMICS Inverters for Single-Axis Drives · Built-In Units	D 31.1
SINAMICS Inverters for Single-Axis Drives · Distributed Inverters	D 31.2
Digital: SINAMICS Converters for Single-Axis Drives · SINAMICS G120X	*D 31.5*
Digital: SINAMICS S210 Servo Drive System	*D 32*
Digital: SINAMICS V90 Basic Servo Drive System	*D 33*
Digital: SINAMICS G120P and SINAMICS G120P Cabinet pump, fan, compressor converters	*D 35*
LOHER VARIO High Voltage Motors Flameproof, Type Series 1PS4, 1PS5, 1MV4 and 1MV5 Frame Size 355 to 1000, Power Range 80 to 7100 kW	D 83.2
Digital: Three-Phase Induction Motors SIMOTICS HV, SIMOTICS TN	*D 84.1*
Digital: Three-Phase Induction Motors SIMOTICS HV	*D 84.3*
High Voltage Three-phase Induction Motors SIMOTICS HV Series A-compact PLUS	D 84.9
Digital: Modular Industrial Generators SIGENTICS M	*D 85.1*
Synchronous Motors with Permanent-Magnet Technology, HT-direct	D 86.2
DC Motors	DA 12
SIMOVERT PM Modular Converter Systems	DA 45
MICROMASTER 420/430/440 Inverters	DA 51.2
MICROMASTER 411/COMBIMASTER 411	DA 51.3
Low-Voltage Three-Phase-Motors	
SIMOTOCS S-1FG1 Servo geared motors	D 41
SIMOTICS Low-Voltage Motors	D 81.1
SIMOTICS FD Low-Voltage Motors	D 81.8
LOHER Low-Voltage Motors	D 83.1
Digital: MOTOX Geared Motors	*D 87.1*
SIMOGEAR Geared Motors	MD 50.1
SIMOGEAR Electric-monorail geared motors Light-load and heavy-load applications	MD 50.8
SIMOGEAR Gearboxes with adapter	MD 50.11
Mechanical Driving Machines	
FLENDER Standard Couplings	MD 10.1
FLENDER High Performance Couplings	MD 10.2
FLENDER Backlash-free Couplings	MD 10.3
FLENDER SIP Standard industrial planetary gear units	MD 31.1

Motion Control	
SINUMERIK 840 Equipment for Machine Tools	NC 62
SINUMERIK 808 Equipment for Machine Tools	NC 81.1
SINUMERIK 828 Equipment for Machine Tools	NC 82
SIMOTION Equipment for Production Machines	PM 21
Digital: Drive and Control Components for Cranes	*CR 1*

Process Instrumentation and Analytics	*Catalog*
Digital: Field Instruments for Process Automation	*FI 01*
Digital: Display Recorders SIREC D	*MP 20*
Digital: SIPART Controllers and Software	*MP 31*
Products for Weighing Technology	WT 10
Digital: Process Analytical Instruments	*AP 01*
Digital: Process Analytics, Components for Continuous Emission Monitoring	*AP 11*

Low-Voltage Power Distribution and Electrical Installation Technology	
SENTRON · SIVACON · ALPHA Protection, Switching, Measuring and Monitoring Devices, Switchboards and Distribution Systems	LV 10
Electrical Components for the Railway Industry	LV 12
Power Monitoring Made Simple	LV 14
Components for Industrial Control Panels according to UL Standards	LV 16
Digital: Air circuit breakers and molded case circuit breakers with UL certification	*LV 18*
3WT Air Circuit Breakers up to 4000 A	LV 35
3VT Molded Case Circuit Breakers up to 1600 A	LV 36
Digital: SIVACON System Cubicles, System Lighting and System Air-Conditioning	*LV 50*
Digital: ALPHA Distribution Systems	*LV 51*
ALPHA FIX Terminal Blocks	LV 52
SIVACON S4 Power Distribution Boards	LV 56
SIVACON 8PS Busbar Trunking Systems	LV 70
Digital: DELTA Switches and Socket Outlets	*ET D1*
Vacuum Switching Technology and Components for Medium Voltage	HG 11.01

Power Supply	
SITOP Power supply	KT 10.1

Safety Integrated	
Safety Technology for Factory Automation	SI 10

SIMATIC HMI / PC-based Automation	
Human Machine Interface Systems/ PC-based Automation	ST 80/ ST PC

SIMATIC Ident	
Industrial Identification Systems	ID 10

SIMATIC Industrial Automation Systems	
Products for Totally Integrated Automation	ST 70
SIMATIC PCS 7 Process Control System System components	ST PCS 7
SIMATIC PCS 7 Process Control System Technology components	ST PCS 7 T
Add-ons for the SIMATIC PCS 7 Process Control System	ST PCS 7 AO
SIMATIC S7-400 advanced controller	ST 400

SIMATIC NET	
Industrial Communication	IK PI

SIRIUS Industrial Controls	
Digital: SIRIUS Industrial Controls	*IC 10*

Digital: These catalogs are only available as a PDF.

Information and Download Center

Digital versions of the catalogs are available on the Internet at:
www.siemens.com/industry/infocenter
There you'll find additional catalogs in other languages.

Get more information

Siemens Products:
www.siemens.com/busbar

Published by
Siemens AG

Siemens AG
Infrastructure & Cities Sector
Low and Medium Voltage Division
Medium Voltage & Systems
Mozartstr. 31 C
91052 ERLANGEN
GERMANY

For the U.S. published by
Siemens Industry Inc.

100 Technology Drive
Alpharetta, GA 30005
United States

Article No. E86060-K1870-A101-A9-7600
KG 0319 2. AUM 210 En
Produced in Germany

Security information

Siemens provides products and solutions with industrial security functions that support the secure operation of plants, systems, machines and networks.

In order to protect plants, systems, machines and networks against cyber threats, it is necessary to implement – and continuously maintain – a holistic, state-of-the-art industrial security concept. Siemens' products and solutions constitute one element of such a concept.

Customers are responsible for preventing unauthorized access to their plants, systems, machines and networks. Such systems, machines and components should only be connected to an enterprise network or the internet if and to the extent such a connection is necessary and only when appropriate security measures (e.g. firewalls and/or network segmentation) are in place.

For additional information on industrial security measures that may be implemented, please visit **http://www.siemens.com/industrialsecurity.**

Siemens' products and solutions undergo continuous development to make them more secure. Siemens strongly recommends that product updates are applied as soon as they are available and that the latest product versions are used. Use of product versions that are no longer supported, and failure to apply the latest updates may increase customer's exposure to cyber threats.

To stay informed about product updates, subscribe to the Siemens Industrial Security RSS Feed under **http://www.siemens.com/industrialsecurity.**