SIEMENS

SIMATIC

ET 200SP HA
ET 200SP HA Distributed I/O system

System Manual

Cybersecurity information 1

Preface 2

System overview 3

Plant planning 4

Installation 5

Wiring 6

Removal 7

Maintenance 8

I/O station with fail-safe I/O modules 9

Technical specifications 10

Dimension drawings A

Accessories/spare parts B

Leakage resistance of the IO device C

Cables D

Service & Support E

10/2024
A5E39261167-AL

Legal information

Warning notice system

This manual contains notices you have to observe in order to ensure your personal safety, as well as to prevent damage to property. The notices referring to your personal safety are highlighted in the manual by a safety alert symbol, notices referring only to property damage have no safety alert symbol. These notices shown below are graded according to the degree of danger.

⚠ DANGER

indicates that death or severe personal injury **will** result if proper precautions are not taken.

⚠ WARNING

indicates that death or severe personal injury **may** result if proper precautions are not taken.

⚠ CAUTION

indicates that minor personal injury can result if proper precautions are not taken.

NOTICE

indicates that property damage can result if proper precautions are not taken.

If more than one degree of danger is present, the warning notice representing the highest degree of danger will be used. A notice warning of injury to persons with a safety alert symbol may also include a warning relating to property damage.

Qualified Personnel

The product/system described in this documentation may be operated only by **personnel qualified** for the specific task in accordance with the relevant documentation, in particular its warning notices and safety instructions. Qualified personnel are those who, based on their training and experience, are capable of identifying risks and avoiding potential hazards when working with these products/systems.

Proper use of Siemens products

Note the following:

⚠ WARNING

Siemens products may only be used for the applications described in the catalog and in the relevant technical documentation. If products and components from other manufacturers are used, these must be recommended or approved by Siemens. Proper transport, storage, installation, assembly, commissioning, operation and maintenance are required to ensure that the products operate safely and without any problems. The permissible ambient conditions must be complied with. The information in the relevant documentation must be observed.

Trademarks

All names identified by ® are registered trademarks of Siemens Aktiengesellschaft. The remaining trademarks in this publication may be trademarks whose use by third parties for their own purposes could violate the rights of the owner.

Disclaimer of Liability

We have reviewed the contents of this publication to ensure consistency with the hardware and software described. Since variance cannot be precluded entirely, we cannot guarantee full consistency. However, the information in this publication is reviewed regularly and any necessary corrections are included in subsequent editions.

Siemens Aktiengesellschaft
Digital Industries
Postfach 48 48
90026 NÜRNBERG
GERMANY

A5E39261167-AL
Ⓟ 11/2024 Subject to change

Copyright © Siemens 2024.
All rights reserved

Table of contents

1 Cybersecurity information 9

2 Preface 11

2.1 Recycling and disposal 15

2.2 Documentation guide for ET 200SP HA 15

2.3 Notifications – Always up to date 16

2.4 Scannable code on the product 16
2.4.1 2D matrix code (QR code / EAN code) 17
2.4.2 ID-Link 18

3 System overview 19

3.1 Notes on the SIMATIC ET 200SP HA distributed I/O system 19

3.2 SIMATIC ET 200SP HA Distributed I/O System 20

3.3 Basic components of the IO device 22
3.3.1 Rail 22
3.3.2 Carrier module for interface module 22
3.3.3 Interface module 23
3.3.4 Connector 24
3.3.5 BusAdapter 25
3.3.6 Carrier module 26
3.3.7 Terminal block 27
3.3.8 D-SUB terminal block 28
3.3.9 Signal cable for D-SUB terminal block 29
3.3.10 I/O module 30
3.3.11 Coding element (for terminal block) 31
3.3.12 Fail-safe I/O module 31
3.3.13 Power bus cover 32

3.4 Accessories for the IO device 32

3.5 Overview of the accessories 33
3.5.1 IM cover (slot cover) 33
3.5.2 Shield connector 34
3.5.3 Labeling strips 35
3.5.4 Reference identification labels 35
3.5.5 Color-coded labels 36
3.5.6 Server module 37
3.5.7 TM cover (slot cover) 37

3.6 Factory markings 38

3.7 Labeling and coding 38
3.7.1 Module labeling 38
3.7.2 Color coding of the I/O module classes 39
3.7.3 Color coding of the potential group 40
3.7.4 Color coding of the spring releases 41

4 Plant planning 43

4.1 Network design options 43

4.2 Topology 43
4.2.1 Linear 43
4.2.2 Ring 44
4.2.3 Star 44
4.2.4 Tree 45
4.2.5 Network 45

4.3 Notes on the safe use of the ET 200SP HA 45

4.4 Notes on the power supply (SELV/PELV) 48

4.5 Notes on the operation of the IO device on a grounded power supply 49

4.6 Power input 49
4.6.1 Grounded incoming supply 49
4.6.2 IO device with ungrounded reference potential 50
4.6.3 Example of a power supply and grounding concept in the overall configuration 51

4.7 Potential relationships in the IO device 52

4.8 Hardware configuration 52
4.8.1 Maximum mechanical configuration 52
4.8.2 Maximum electrical configuration 53
4.8.3 Address space 54

4.9 Configurations of the slots of I/O modules 54
4.9.1 Selection of the terminal blocks: 54
4.9.2 Potential groups 58
4.9.3 Configuration examples of an IO device 59
4.9.3.1 Example for positioning terminal blocks 59
4.9.3.2 Example of the configuration for terminal blocks with 32 process terminals 60
4.9.3.3 Example of the configuration for terminal blocks with 32 process terminals and 32 terminal potential distributors 61
4.9.3.4 Example of the configuration for terminal blocks with 16 process terminals (highly isolated process terminals) 62
4.9.4 Pin assignment of the terminal block with push-in terminals and D-SUB connector 62
4.9.5 Terminal blocks 66
4.9.5.1 Terminal block with sensor supply (L+ potential) 66
4.9.5.2 Pin assignment (L+ potential) 67
4.9.5.3 Terminal block with potential distributor (M potential) 68
4.9.5.4 Pin assignment (M potential) 68

4.10 Changes in Runtime and redundancy 69
4.10.1 Notes on changes during runtime and redundancy 69
4.10.2 Notes on connecting the IO device via system redundancy 71
4.10.3 Connection via system redundancy 73
4.10.3.1 Failure behavior for IO devices with system redundancy 73
4.10.3.2 Application planning of the IO device with system redundancy (1 subnet) 73
4.10.3.3 Application planning of the IO device with system redundancy (2 subnets in line structure) 73
4.10.3.4 Application planning of the IO device with system redundancy and media redundancy (2 subnets in ring structure) 74
4.10.4 Notes on connecting the IO device via media redundancy 75
4.10.5 Connection via media redundancy 77

4.10.5.1 Failure behavior for IO devices with media redundancy ... 77
4.10.5.2 Application planning of the IO device with media redundancy (1 subnet ring) ... 77
4.10.5.3 Application planning of the IO device with media redundancy and system redundancy (1 subnet ring) ... 77
4.10.5.4 Redundancy manager ... 78
4.10.6 Notes on connecting the IO device via IO redundancy ... 78
4.10.7 Connection via IO redundancy ... 80
4.10.7.1 Response to failure with IO redundancy ... 80
4.10.7.2 Application planning of the IO device with I/O redundancy ... 80
4.11 Time synchronization and time stamping ... 81
4.11.1 Time synchronization options ... 81
4.11.2 Time synchronization of events ... 81
4.11.3 Time-of-day synchronization options ... 82
4.11.3.1 Split plant bus ... 82
4.11.3.2 Example configuration of time synchronization and time stamping with a single CPU ... 84
4.11.3.3 Example configuration of time synchronization and time stamping with redundant CPU ... 85
4.12 Slot rules ... 86
5 Installation ... 89
5.1 Notes on installation ... 89
5.2 Basics on mounting ... 90
5.2.1 Minimum clearances in the control cabinet ... 90
5.2.2 Dimensions for the drill hole ... 91
5.2.3 Functional grounding ... 92
5.2.4 Terminal block for IO redundancy or potential distributor ... 92
5.3 Overview of the mounting ... 93
5.4 Installation ... 96
5.4.1 Preparing a rail for installation ... 96
5.4.2 Installing the rail ... 97
5.4.3 Installing the functional grounding ... 98
5.4.4 Installing the carrier module for the interface module ... 99
5.4.5 Mounting the interface module ... 100
5.4.6 Mounting an carrier module for I/O module slots ... 101
5.4.7 Installing the terminal block ... 104
5.4.8 Inserting an I/O module ... 105
5.4.9 Inserting a TM cover ... 106
5.4.10 Installing the server module and power bus cover ... 107
5.4.11 Marking options of IO device components ... 109
5.4.11.1 Applying color-coded labels ... 109
5.4.11.2 Applying labeling strips ... 109
5.4.11.3 Applying reference identification labels ... 110
6 Wiring ... 111
6.1 Notes on operation ... 111
6.2 Notes on wiring ... 112
6.3 Notes on wiring of the terminal block ... 113
6.4 Supply of the terminal block ... 114
6.4.1 Connection on the slot and I/O module ... 114

6.4.2 Assignment of the terminals on the terminal block ... 116
6.4.3 Supply voltage ... 117
6.4.4 Circuit diagrams for the supply voltage ... 118
6.5 Connecting the power supply to the interface module ... 120
6.6 Notes on the interface connection for communication ... 121
6.7 Connecting the communication interfaces ... 122
6.7.1 Connecting the PROFINET cable to the BusAdapter ... 122
6.7.2 Connecting the BusAdapter ... 122
6.7.3 Examples for the number of media interfaces ... 126
6.7.3.1 Example of a recommended PROFINET IO system setup ... 126
6.7.3.2 Example of a PROFINET IO system setup that is not recommended ... 126
7 Removal ... 127
7.1 Removing a server module ... 127
7.2 Removing the power bus cover ... 128
7.3 Removing wires ... 128
7.4 Removing a terminal block ... 129
7.5 Removing the carrier module ... 131
7.6 Removing a BusAdapter from the interface module ... 133
7.7 Removing the interface module ... 134
7.8 Removing the carrier module for the interface module ... 136
7.9 Pulling out I/O modules with output disable switch ... 137
7.10 Pulling out I/O modules without output disable switch ... 139
7.11 Removing color-coded labels ... 140
8 Maintenance ... 141
8.1 Conditions for pulling and plugging modules during operation ... 141
8.2 Maintenance position of the I/O modules ... 142
8.2.1 Set the I/O module to the maintenance position with the output disable switch ... 142
8.2.2 Set the I/O module to the maintenance position without the output disable switch ... 144
8.3 Notes on replacing the I/O modules ... 145
8.4 Replacement of I/O modules ... 146
8.4.1 Replacing an I/O module ... 146
8.4.2 Removing the coding element from the terminal block ... 147
8.4.3 Replacing an I/O module with another type ... 148
8.4.4 Read back data for module identification into the project ... 149
8.4.5 Transfer data for module identification after plugging in the I/O module ... 149
8.5 Replacing a terminal block ... 149
8.6 Factory settings ... 151
8.6.1 Reset to factory settings ... 151
8.6.2 Resetting the interface module to factory settings using STEP 7 ... 151
8.7 Performing a firmware update for the components ... 152

8.8 Communication error ... 153
8.8.1 Communication error "IO redundancy warning" (maintenance event: error code 121H) ... 153
8.8.2 Remedy communication error "IO redundancy warning" (maintenance event: Error code 121H) ... 153
8.9 Run firmware update for the server module ... 154
9 I/O station with fail-safe I/O modules ... 155
9.1 Notes on redundant automation systems ... 155
9.2 Automation systems ... 156
9.2.1 Example configuration of automation system with ET 200SP HA and PROFINET IO ... 156
9.2.2 Safety Integrated ... 156
9.2.3 Fail-safe automation systems (F-systems) ... 157
9.3 Fail-safe I/O module ... 157
9.4 Notes on fail-safe I/O modules (F-I/O modules) ... 158
9.5 Overview of fail-safe I/O modules ... 160
9.5.1 Example configuration for distributed I/O with fail-safe and non-fail-safe I/O modules ... 160
9.5.2 Fail-safe input modules (F-input modules) ... 161
9.5.3 Fail-safe output modules (F-output modules) ... 161
9.5.4 Safety mode ... 161
9.6 Notes placed on sensors and actuators for fail-safe I/O modules ... 162
9.7 Useful information about the reaction to errors in fail-safe I/O modules ... 163
9.8 Notes on readback error through crosstalk in F-output modules ... 165
9.9 Response and changeover times for fail-safe I/O modules ... 166
10 Technical specifications ... 169
10.1 Standards and approvals ... 169
10.1.1 Currently valid markings and approvals ... 169
10.1.2 EU Declaration of Conformity ... 170
10.1.3 CCC approval ... 171
10.1.4 UK Declaration of Conformity ... 172
10.1.5 Explosion protection ... 172
10.1.6 UL approval ... 175
10.1.7 UL HazLoc approval ... 175
10.1.8 FM approval ... 177
10.1.9 ACMA approval ... 177
10.1.10 Approval for Korea ... 178
10.1.11 Approval for the Eurasian Customs Union ... 178
10.2 Electromagnetic compatibility ... 178
10.3 Shipping and storage conditions ... 182
10.4 Mechanical and climatic environmental conditions ... 183
10.5 Information on insulation, protection class, degree of protection and rated voltage ... 185
10.6 Technical specifications of subcomponents of the ET 200SP HA ... 187
10.6.1 Technical specifications for the modules ... 187
10.6.2 Technical specifications - Carrier modules (TM) ... 187
10.6.3 Technical specifications - Terminal blocks ... 195

10.6.4 Technical specifications - Server module ... 217
A Dimension drawings ... 219
A.1 Dimension drawings of the rails ... 219
A.2 Shield connector ... 221
A.3 Labeling strip ... 221
A.4 Reference identification labels ... 222
A.5 Color-coded labels ... 222
B Accessories/spare parts ... 225
C Leakage resistance of the IO device ... 227
D Cables ... 229
D.1 Connecting the cables ... 229
D.1.1 Connecting solid cables without ferrule ... 229
D.1.2 Connecting stranded cables with ferrule or ultrasonic compression ... 229
D.1.3 Connecting stranded cables without ferrule ... 230
D.2 Installing the shield contact ... 231
E Service & Support ... 235
E.1 Information and support ... 238
E.2 Mounting rules ... 238
E.3 Cable cross-sections and ferrules ... 239
Glossary ... 241
Index ... 255

Cybersecurity information

1

Siemens provides products and solutions with industrial cybersecurity functions that support the secure operation of plants, systems, machines and networks.

In order to protect plants, systems, machines and networks against cyber threats, it is necessary to implement – and continuously maintain – a holistic, state-of-the-art industrial cybersecurity concept. Siemens' products and solutions constitute one element of such a concept.

Customers are responsible for preventing unauthorized access to their plants, systems, machines and networks. Such systems, machines and components should only be connected to an enterprise network or the internet if and to the extent such a connection is necessary and only when appropriate security measures (e.g. firewalls and/or network segmentation) are in place.

For additional information on industrial cybersecurity measures that may be implemented, please visit
https://www.siemens.com/cybersecurity-industry.

Siemens' products and solutions undergo continuous development to make them more secure. Siemens strongly recommends that product updates are applied as soon as they are available and that the latest product versions are used. Use of product versions that are no longer supported, and failure to apply the latest updates may increase customer's exposure to cyber threats.

To stay informed about product updates, subscribe to the Siemens Industrial Cybersecurity RSS Feed under
https://new.siemens.com/cert.

Preface

2

Purpose of the documentation

This documentation provides comprehensive information on using the ET 200SP HA distributed I/O system in the automation system:

- General information on the distributed I/O system
- Configuring
- Installation
- Wiring
- Commissioning

Knowledge required

A basic knowledge of automation technology is required to understand the documentation.

If you want to set up safety-instrumented plants with fail-safe I/O modules, you need to be familiar with the valid national and international standards.

Validity of the documentation

This documentation applies to the ET 200SP HA distributed I/O system.

Note

Higher-priority documentation

The information for the specific components takes precedence over the information in this documentation. The statements in the product information always have priority over all other information.

Currently valid markings and approvals (Page 169)

Configuration of the ET 200SP HA

Note

Updates

Ensure that the latest updates are installed.

You can configure the following components of the distributed I/O system when the following updates are installed:

Component of the distributed I/O system	Required updates
Shared device for IM155-6 PN	HSP0272 V1.01.00
AI (in connection with a potential distributor terminal block)	HSP0273
AQ (in connection with a potential distributor terminal block)	HSP0274
DI 32x24VDC HA	HSP0275 V2.00.00
DQ 32x24VDC/0.5A HA	HSP0276 V2.00.00
DQ 8x24VDC/2A	HSP0276 V2.00.00
DI 16x24VDC NPN	HSP0328
F-DI 16xNAMUR	HSP4003 V1.0.0
BusAdapter (types: LC/FC; LC/RJ45)	HSP0278
BusAdapter (types: 2x LC/LD; LC-LD/RJ45)	HSP0336
Isolated I/O modules	HSP0299
Technology module; Fast inputs and outputs and counter functions; TM FIO & counter	HSP0298 V3.00.00
Technology module; Vibration protection; TM VibProt	

Configuring the fail-safe I/O modules

The following hardware and software requirements must be met for you to configure the fail-safe I/O modules of the distributed I/O system.

- Hardware:
  - SIMATIC CPU 41x-5H PN/DP, as of firmware version V6.0
    SIMATIC CPU 410-5H (including 410E), as of firmware version V8.2
  - IM155-6 PN HA, as of firmware version V1.2
- Software:
  - S7 F Systems V6.4 (or higher)
    PCS 7 V9.1 + HUP (or higher) or PCS 7 V9.0 SP3 + HUP (or higher)
    or
  - S7 F Systems V6.4 (or higher)
    STEP 7 V5.6 + SP2 + HF6 (or higher) and CFC V9.0 + SP5 + Upd2 (or higher).

Conventions

The following terms are used synonymously in this documentation:

Term	Synonyms	Notes
I/O station	• IO device	Unless otherwise specified, applies for a station of the distributed I/O system (I/O device at a PROFINET IO).
I/O module	• I/O module • Module • Electronic module • PM	Unless otherwise specified, applies to the objects of the distributed I/O in which the electronics for detecting sensor signals and/or for outputting hardware control signals to actuators is implemented.

Term	Synonyms	Notes
Combination of carrier module and terminal block	BaseUnit	Components of the I/O station: When a terminal block is mounted on a carrier module, a slot occurs in the distributed I/O system. This slot is referred to as a BaseUnit for similar distributed I/O systems. Unless otherwise specified, applies to the specific components for mounting the slots of the I/O modules.
Interface module	IM	Head module or other interface modules
Slot cover	TM cover, IM cover	Components of the I/O station: Unless otherwise specified, applies for the specific component for covering a slot.

Also read the notes marked as follows:

Note

A note contains important information on the product described in the documentation, on the handling of the product and on the section of the documentation to which particular attention should be paid.

Special information

Note

Important note for maintaining operational safety of your plant

Plants with safety-related features are subject to special operational safety requirements on the part of the operator. Even suppliers are required to observe special measures during product monitoring. We can notify you of product developments and product features that are (or could be) important for the operation of safety-related systems.

To ensure you are always up to date in this regard and can make changes to your system, if necessary, you need to subscribe to the corresponding notifications.

Note

Documentation of components of the ET 200SP HA

At Online Support, you will find the documentation for additional components of the ET 200SP HA:

- Interface module
- BusAdapter
- I/O modules
- Fail-safe I/O modules
- *SIMATIC; Distributed I/O; ET 200SP HA/ET 200SP; Modules for devices in the hazardous area*

Recommendation:
Register for notifications about the distributed I/O.

You can find information on this in section: Notifications – Always up to date (Page 16)

Changes compared to the previous version

You can find an overview of the most important changes of the ET 200SP HA here:

- As of document version AL:
  - New carrier modules added (IM single, IM redundant)
  - New module added (DI 16x24VDC NPN)
  - New module added (DQ 8x24VDC/2A)
  - New module added (F-DI16xNAMUR)
- As of document version AK:
  - New terminal blocks added (type M0, type F0, type S0, type R0)
  - New module added (AI 8xU/I/TC/4xRTD 2/3/4-wire HA)
  - New module added (AI 16xI 2-wire HA)
  - Slot rules included
- As of document version AJ:
  - D-SUB terminal block for use with fail-safe I/O modules released.
  - Technical specifications - Terminal blocks added.
- As of document version AH:
  - Terminal block (type F1)
  - F-I/O (F-AI 8xI 2-/4-wire HART HA) integrated
    Also see the documentation of the fail-safe I/O modules.
  - Response times for the fail-safe IO modules
- As of document version AG:
  - D-SUB terminal block integrated
  - Redundant terminal block (type L0)
- As of document version AE:
  - F-I/O integrated
    Also see the documentation of the fail-safe I/O modules.
  - Carrier module with 8 slots without power bus available
- As of document version AC:
  - Counter function integrated
  - Additional approvals

See also

Notes on redundant automation systems (Page 155)

2.1 Recycling and disposal



Electrical and electronic products must be disposed of properly in accordance with the relevant regulations for waste electrical and electronic equipment. The product is low in pollutants and recyclable. Dispose of the product according to local regulations or contact a certified waste disposal service.

2.2 Documentation guide for ET 200SP HA

The documentation for the distributed I/O system SIMATIC ET 200SP HA is divided into three areas.
This division allows you easier access to the specific information you require.

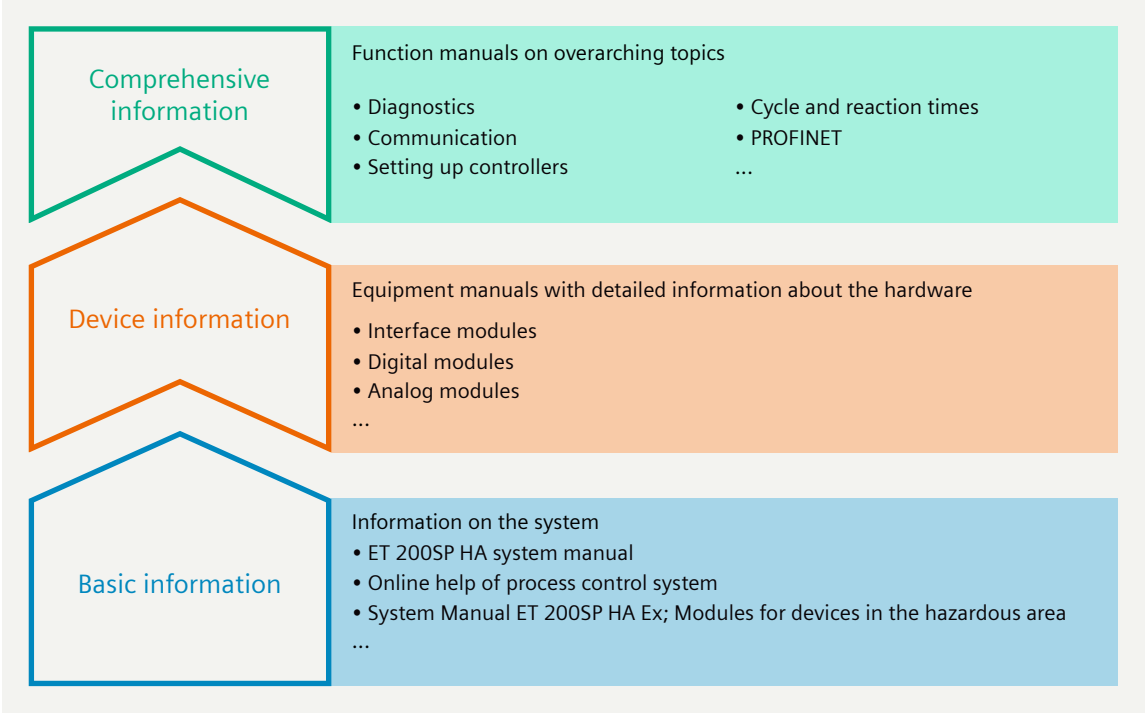

Basic information

The system manual includes a detailed description of installation and wiring of the ET 200SP HA.

Device information

Product manuals contain a compact description of the module-specific information, such as properties, terminal diagrams, characteristics and technical specifications.

Comprehensive information

The function manuals contain detailed descriptions of general topics relating to the ET 200SP HA, for example, diagnostics, communication, designing interference-free controllers.

Information on changes

Changes and additions to the manuals are documented in a product information file when necessary.

2.3 Notifications – Always up to date

Register for individual notifications (Newsletter)

1. Open the web page of the product support: https://support.industry.siemens.com/cs/ww/en/ps (https://support.industry.siemens.com/cs/ww/en/ps)
2. Filter the products for which you want to receive notifications.
3. Click "Save filter".
4. Enter the filter name.
5. Click "Enable notification".
6. Click "Save filter".

Additional information on this:

- Quick start: Receive notifications (Newsletter) (https://support.industry.siemens.com/cs/): Individual notifications and filters (Newsletter)
- Helpful functions in Online Support (videos) (https://support.industry.siemens.com/cs/ww/en/sc/2063)

Always up to date with "mySupport"

In Industry Online Support, you can set "Filters" for various individual topics of interest (e.g. topics, configurations, products, etc.) or mark specific articles as "Favorites". To not have to check for yourself whether there is news or changes to these topics of interest, you can receive notifications from the Online Support, for example, by email.

- You access this service on the following pages on the Internet (https://support.industry.siemens.com/cs/ww/en/my).
  You will find the following information in the header:
  - **Language**: Language selection for "mySupport" page
  - **Contact**: "Global and regional contacts"
  - **Help:** Help for "mySupport" page
  - **Support Request**: Requests submitted to technical specialists

2.4 Scannable code on the product

This product can contain the ID-Link or the 2D matrix code. Please check by means of the following examples which type of code your product contains.

ID-Link:



2D matrix code:



2.4.1 2D matrix code (QR code / EAN code)

The 2D matrix code on the product is a coded representation of the product-specific article number.

Access to product-related information

For reading the 2D matrix code, Siemens offers an app for mobile use.
Information about the app and the download can be found on the Internet: "Mobile use via app (https://support.industry.siemens.com/cs/ww/en/sc/2067)".

The app provides direct access to the technical forum and product-related posts.

Examples:

- FAQs
- Application examples
- Manuals
- Certificates
- Product notices

2.4.2 ID-Link

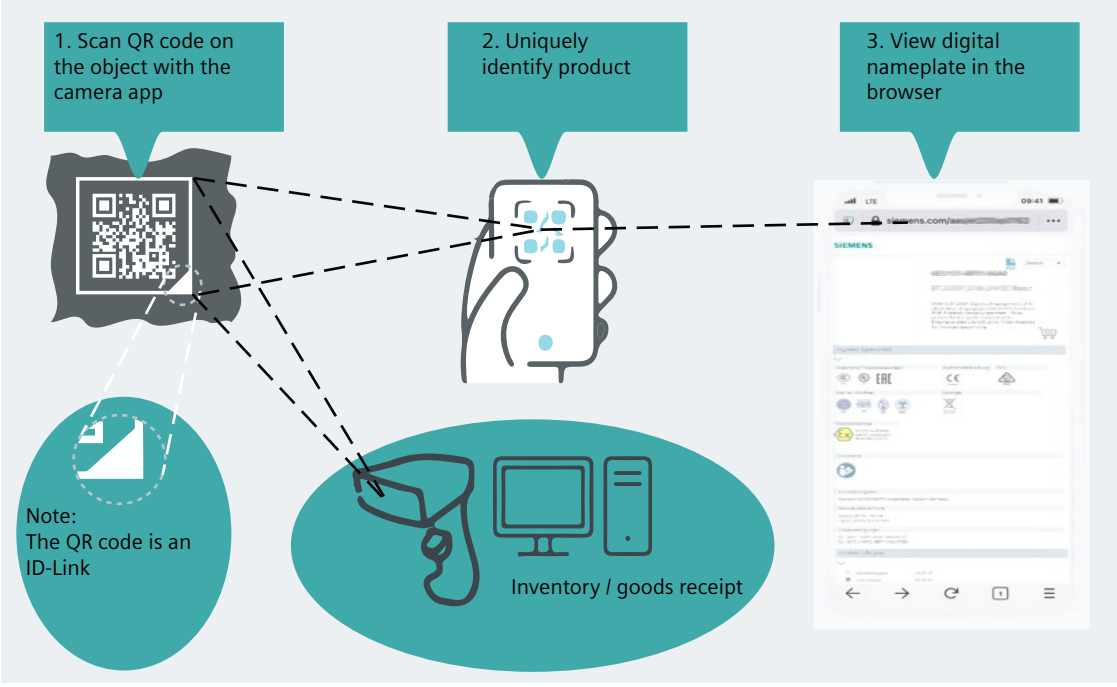

The ID-Link on the front of this product and on the packaging uniquely identifies the product.

The ID-Link corresponds to the standard IEC 61406-1.

If you scan the ID-Link (e.g. with a smartphone), you open the digital nameplate directly.

Digital nameplate

The digital nameplate is:

- A contribution from SIEMENS to reduce the CO_2 footprint and to conserve resources.
- The efficient way to access the product information provided on the Internet. This information remains up-to-date over the entire product life cycle.
  For your plant documentation, you have the option of linking the download or downloading the following information:
  - Technical specifications
  - Certifications and Declaration of Conformity
  - Manufacturer information
  - Product identification
  - User documentation
  - Replacement
  - Responsive web design
  - Other information

System overview

3

3.1 Notes on the SIMATIC ET 200SP HA distributed I/O system

The SIMATIC ET 200SP HA distributed I/O system is an I/O system that enables you to connect process signals to a higher-level controller via PROFINET IO.

SIMATIC ET 200SP HA Distributed I/O System (Page 20)

This section gives you an overview of the most important properties and areas of application of the I/O system.

Properties

Hazardous area

- Installation in Zone 2
- Connection of devices in hazardous area up to Zone 0

Ambient conditions

- Maximum temperature: 70 °C

Communication standards

- PROFINET IO



Easy to use

- Compact modules and permanent wiring
- Easy connection of signals via SUB-D connectors and push-in terminals.

Compact design

- High variability through scalability
- High channel density
- Maximum level of clarity in smallest space through innovative labeling system
- System-integrated load voltage supply

Safety Integrated

- Easy integration of fail-safe I/O modules
- Setting of all F-parameters using software

Availability

- Redundant configuration of the station is possible
- IO redundancy is possible

Areas of application

The SIMATIC ET 200SP HA distributed I/O system is suitable for a variety of applications. You can align the SIMATIC ET 200SP HA to meet the requirements on site through scaling and adaptations, for example, the matching configuration.

ET 200SP HA is designed for installation in a control cabinet.

Applications for safety engineering are possible through:

- Connection to fail-safe automation systems
- Use of fail-safe I/O modules

You perform configuration and programming of your safety program just like the configuration and programming for your standard CPUs.

Basic components for configuration of IO devices

For use in an automation system, you combine the components into an IO device.

Supplementary components are available in the catalog:

Internet (https://support.industry.siemens.com/cs/ww/en/view/9172884): *Interactive Catalog CA01; Automation and Drives*

3.2 SIMATIC ET 200SP HA Distributed I/O System

Definition

The SIMATIC ET 200SP HA distributed I/O system is a scalable I/O system.

Description

The basic components of the distributed I/O system are shown using the following configuration of an IO device as an example.

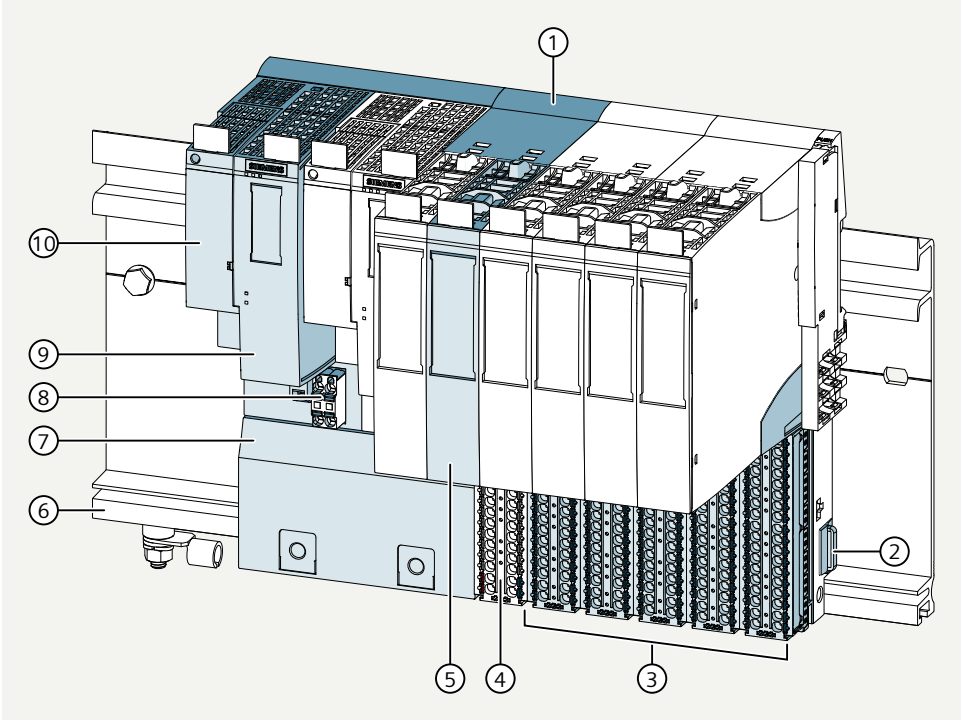

①	Carrier module (Page 26)	The slots for the I/O modules arise by the connection of these carrier modules to the terminal blocks.
②	Power bus cover (Page 32)	Serves to protect the power bus contacts.
③ ④	Terminal block (Page 27) (optional: D-SUB terminal block (Page 28))	Provide the process terminals for connecting sensors, actuators and other devices. ③ Light gray terminal block: Separation of potential groups and terminals for connection to the supply voltage ④ Dark gray terminal blocks: Extension of the potential group
⑤	I/O module (Page 30)/ Fail-safe I/O module (Page 31)	Detect faults via sensors and trigger the corresponding responses.
	With Coding element (for terminal block) (Page 31)	Encodes the type of the plugged I/O module.
⑥	Rail (Page 22)	Serves as type-specific assembly platform for the IO device.
⑦	Carrier module for interface module (Page 22)	Used for the electrical and mechanical connection of the individual modules.
⑧	Connector (Page 24)	Used for the connection to the supply voltage (X80 or for redundancy X80 and X81).

⑨	Interface module (Page 23)	Serves as an interface of the distributed I/O system to the central unit of the automation system.
⑩	BusAdapter (Page 25)	Connects the IO device to the IO controller (CPU) via PROFINET IO.

3.3 Basic components of the IO device

3.3.1 Rail

Definition

The mounting rail is the component on which the modules of the IO device are attached.

Description

The upper part of the mounting rail corresponds to a standard rail (width 35 mm).

Mounting rails are available in the following versions:

- Mounting rail 482.6 mm (19" rack)
- Mounting rail 1500 mm

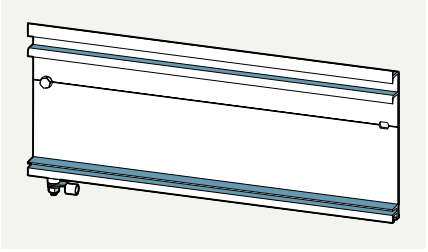

3.3.2 Carrier module for interface module

Definition

Carrier modules for interface modules (subsequently referred to as IM) fulfill electrical and mechanical functions in the IO device.

Electrical functions:

- Routing the supply voltage (connector) to the IM
  Connector (Page 24)
- Routing the backplane bus from the IM to a carrier module for I/O modules installed on the right-hand side
- Routing the functional grounding from the mounting rail to the BusAdapter

Mechanical functions:

- Fastening of the slots for IMs on the mounting rail
- Locking of a slot with the module on the left (carrier module for an I/O module)
- Mechanical fastening of the IM in the slot

Description

Carrier modules for interface modules are available in the following versions:

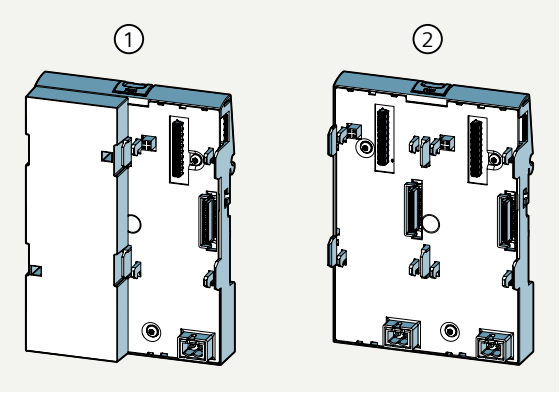

① Carrier module for 1 interface module	Required for singular connection of the IO device to PROFINET IO.
② Carrier module for 2 interface modules	Required for redundant connection of the IO device to PROFINET IO.

You determine the type of carrier modules based on availability requirements.

3.3.3 Interface module

Definition

The interface module connects the IO device to the IO controller via a BusAdapter connected to PROFINET IO and exchanges data with the I/O modules via the backplane bus.

Description

The interface module has the following design:

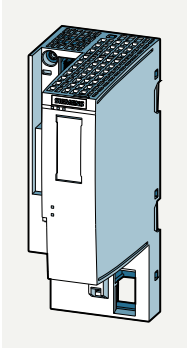

The interface module can be used redundantly.

3.3.4 Connector

Definition

The supply voltage of the interface module is connected via a 4-pin connector that is located on the front of the interface module.

Description

The connector is attached to the IM carrier module as shown below:

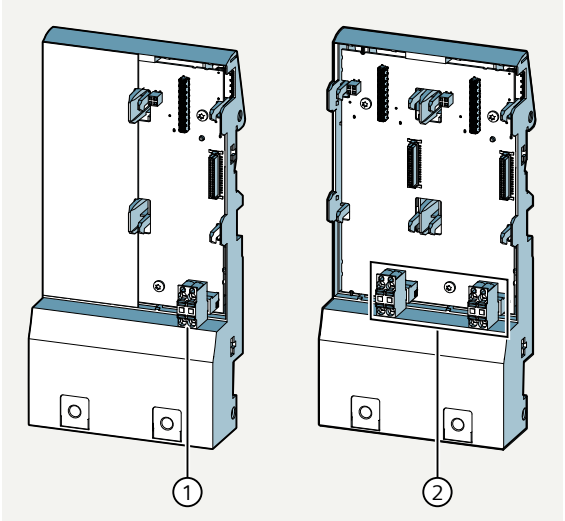

① Connector on the carrier module for 1 interface module
② Connector on the carrier module for 2 interface modules

The contacts of the connector are designed for the following connections:

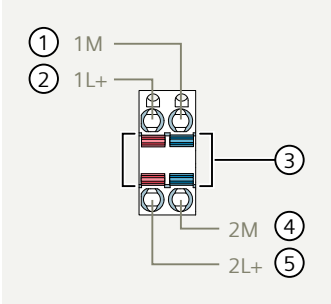

① Supply voltage: Ground (permitted current 10 A)
② Supply voltage: L+ 24 V DC (permitted current 10 A)
③ Spring release
④ Loop through supply voltage: Ground (permitted current 10 A)
⑤ Loop through supply voltage: L+ 24 V DC (permitted current 10 A)

The following contacts are interconnected in the connector:

- 1L+ and 2L+
- 1M and 2M

These internal connections make it possible for you to loop through the supply voltage or to separate a looped through supply voltage without interrupting the supply at this connection point.

The maximum cross-section of the connection is 2.5 mm^2. A strain relief is not present.

3.3.5 BusAdapter

Definition

The selection of the BusAdapters for PROFINET IO determines the cable types by which an interface module is connected to the fieldbus.

Description

The connection options with the PROFINET cables depend on the type of the BusAdapter.

Several BusAdapter types are available for the interface modules:

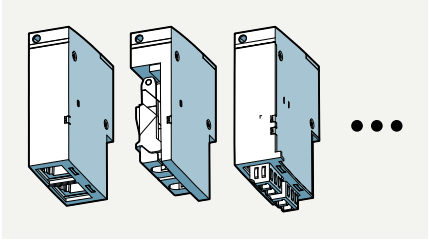

See also

Accessories/spare parts (Page 225)

3.3.6 Carrier module

Definition

Carrier modules fulfill electrical and mechanical functions in the IO device.

Electrical function:

- Routing the backplane bus to all I/O modules

Mechanical functions:

- Fastening of the slots for I/O modules of the mounting rail
- Locking of a slot with the module on the left

Description

You determine the number and type of carrier modules based on the planned I/O modules.

Carrier modules for I/O modules are available in the following versions:

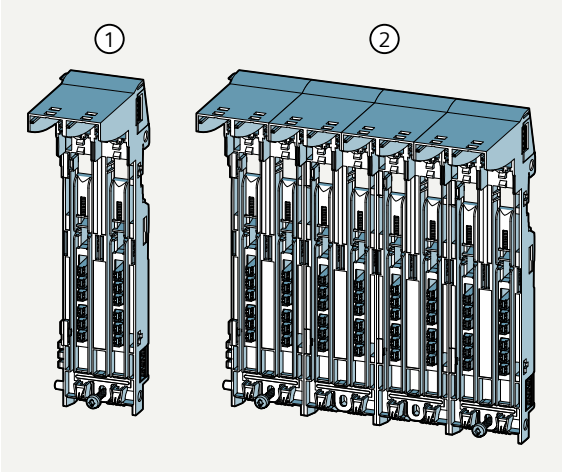

①	Carrier module 2x	Carrier for 2 I/O modules Width: 45 mm
②	Carrier module 8x Carrier module 8x without power bus	Carrier for 8 I/O modules Width: 180 mm

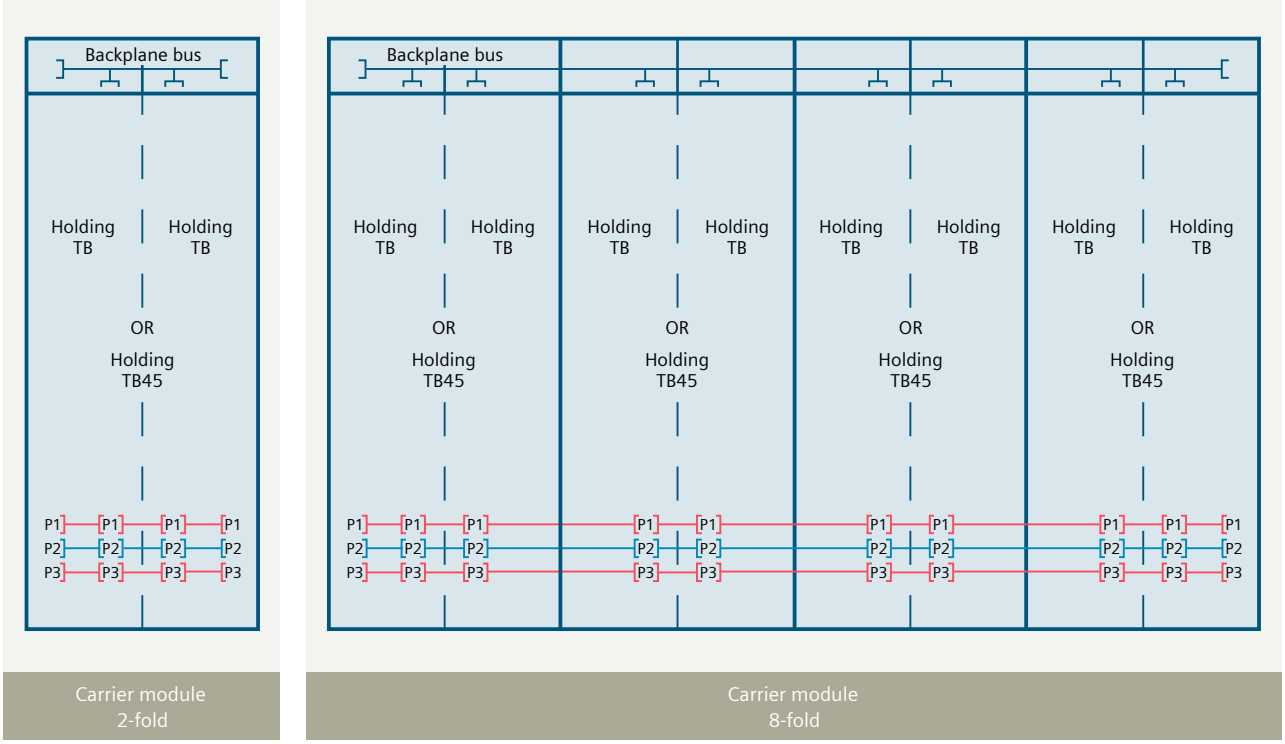

TB	Terminal block 22.5 mm wide
TB45	Terminal block 45 mm wide (only types M1 or L0)
Px	Power supply (not available for all 8x carrier modules)

3.3.7 Terminal block

Definition

Depending on the type, the terminal blocks can support the following electrical and mechanical functions in the IO device:

Electrical functions:

- Infeed of the supply voltage (L+/M)
- Formation of potential groups or potential distribution
- Redundant configuration of the I/O modules
- Module-specific connections with the process terminals

Mechanical functions:

- Together with the carrier module as slot of the I/O modules

Description

Selected terminal blocks (dark type in this case) are generally shown as follows:

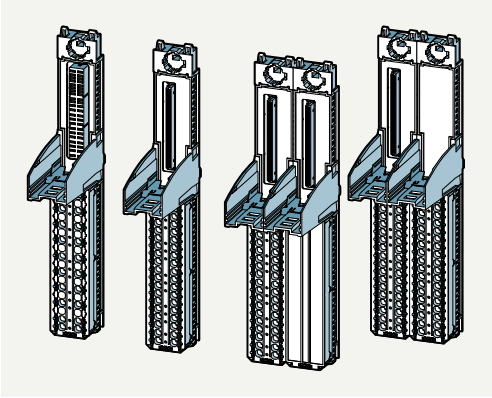

Technical specifications - Terminal blocks (Page 195)

3.3.8 D-SUB terminal block

Definition

The D-SUB terminal block is suitable for I/O modules with a rated signal voltage of 24 V DC.

It was designed for the following application cases:

- Quick installation of prepared hardware structures
- Fast migration of hardware structures

Description

The supply voltage for the I/O module must be connected to each terminal block with D-SUB connector. The terminal blocks with D-SUB connector have no connection to the power bus. The missing power bus function is indicated by the black housing color of the terminal blocks.

The power supply is connected via a separate connector (connector included in delivery).

A 37-pin D-SUB connector (female) is required for mounting prefabricated signal cables. Connecting a suitable D-SUB connector to this terminal block enables you to connect the shielding of the signal cables to the mounting rail. How this feature is used depends on the plant-specific grounding concept.

Electrical isolation

When using D-SUB terminal blocks, the insulation strength between the channels and between the channels and the load voltage is reduced to a test voltage of 1200 V DC / 1 min.

Note

When selecting the D-SUB signal cables and connectors, also take into account the specific insulation strength between the individual wires/pins. These values impact the insulation strength between the channels and between the channels and the load voltage.

Electric potential difference

When using D-SUB terminal blocks, the permissible electric potential difference is limited to voltages/currents from voltage/current supplies with safe electrical isolation (SELV/PELV according to IEC/UL61010-2-201) with a rated value of 24 V DC ±20% $U_{⎓}$.

Schematic configuration of the D-SUB terminal block:

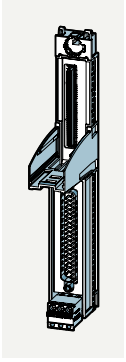

3.3.9 Signal cable for D-SUB terminal block

Definition

The signal cable connects the D-SUB terminal block to the I/O.

Description

For proper operation, the signal cable must meet the following requirements:

- The D-SUB cable must be shielded.

- Operate the cable and the D-SUB plug-in connector only under the general conditions, especially the thermal ratings, which have been approved for the products.
- If you are operating fail-safe I/O modules, the wire cross-section must be at least 0.25 mm². When using the F-DQ 10x24 VDC/2A I/O module, the wire cross-section must be at least 0.5 mm².
- When you operate fail-safe I/O modules, measures for the prevention of short circuits according to EN 13849-2 must be taken into account.

3.3.10 I/O module

Definition

I/O modules detect the current process status or trigger corresponding reactions through the sensors and actuators connected to the terminal block. With ET 200SP HA, they are inserted in slots, which arise from the combination of carrier module and terminal block.

Specific information on the additional functions of an I/O module is available in the documentation of the respective I/O modules.

Description

The module types of the ET 200SP HA system are constantly being extended.

Note

You can find the I/O modules that can be used in IO redundancy in the table under Selection of the terminal blocks: (Page 54).

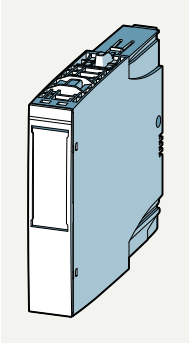

3.3.11 Coding element (for terminal block)

Definition

There is a mechanical coding element for the ET 200SP HA distributed I/O system. This element encodes the type of the installed I/O module.

The coding element serves as mechanical barrier to prevent the connection of incompatible I/O modules to the terminal block.

Description

The coding element has two parts. In the factory state, both parts are in the I/O module.

The first time you insert an I/O module, part of the coding element locks into the terminal block. This part of the coding element encodes this slot for the type of the I/O module.

The coding element has the following design:



3.3.12 Fail-safe I/O module

Definition

The fail-safe I/O modules are mechanically compatible with the non-fail-safe I/O modules. The fail-safe I/O modules detect the current process status or trigger the required responses through the sensors and actuators connected to the terminal block.

Fail-safe I/O modules have an internal two-channel design.

Two integrated processors monitor each other and automatically test the input or output circuit.

In case of an error, the processors set the fail-safe I/O module to the configured safe state.

Notes on fail-safe I/O modules (F-I/O modules) (Page 158)

View

Example view of a fail-safe I/O module, recognizable by the yellow color of the housing.

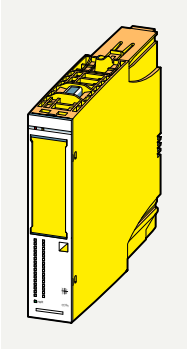

- Fail-safe input modules (F-input modules) (Page 161)
- Fail-safe output modules (F-output modules) (Page 161)

3.3.13 Power bus cover

Definition

The power bus cover is used to protect the power bus contacts.

Description

The power bus cover has the following design:

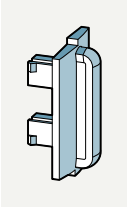

3.4 Accessories for the IO device

Definition

Accessory parts are not included in the I/O components. The components can be ordered separately.

Accessories/spare parts (Page 225)

Description

The exemplary use of the accessory components is shown as follows:

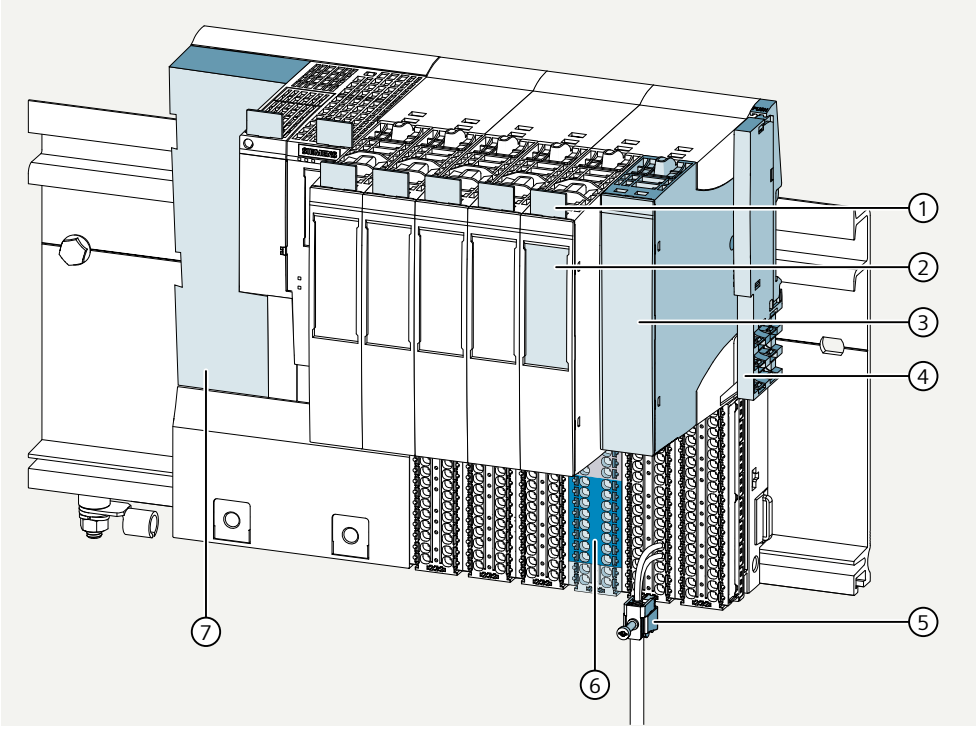

①	Reference identification labels (Page 35)	Used for slot identification
②	Labeling strips (Page 35)	Used for identification of an I/O module
③	TM cover (slot cover) (Page 37)	Used to protect the contacts when the slots are not occupied or reserved.
④	Server module (Page 37)	Completes the station configuration of the distributed I/O.
⑤	Shield connector (Page 34)	Used to ground the cable shield of the process cables
⑥	Color-coded labels (Page 36)	Used for identification of the potentials of the add-on terminals
⑦	IM cover (slot cover) (Page 33)	Used to protect the contacts when the slots are not occupied

3.5 Overview of the accessories

3.5.1 IM cover (slot cover)

Definition

Plug an IM cover on the IM slots if the IM slots are not fitted with an IM.

Description

The IM cover has the following design:

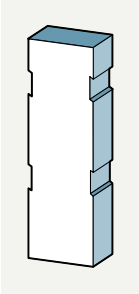

3.5.2 Shield connector

Definition

You need the shield connector to contact cable shields (e.g. for analog modules).

The shield connection conducts interference currents on cable shields to ground via the mounting rail.

It enables the shield of process cables to be connected to the functional grounding. The mounting rail of the I/O station must be connected to functional grounding for this.

It is not necessary to contact the shield where the cable enters the cabinet.

You attach the shield connection on the terminal block.

The shield connector is automatically connected to the functional grounding of the mounting rail after installation.

Design

The shield connection consists of a shield contact, a shield terminal and a support element.

The shield connection has the following design:

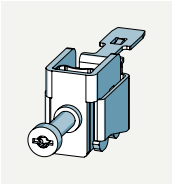

Note

Differences for the terminal block with D-SUB connector

The shield of the D-SUB connector on the terminal block is connected to the functional grounding of the mounting rail. If the connector on the cable has a suitable shield support and the shield is attached to the connector, a conductive connection is established when the connector is installed.

3.5.3 Labeling strips

Definition

The labeling strips are mostly used for unique identification of the component within the system.

Description

The labeling strips have the following design:

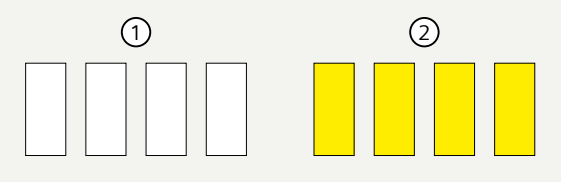

① Labeling sheet for I/O modules
② Labeling sheet for fail-safe I/O modules

Printable labeling strips can be ordered as accessories:

- for thermal transfer printers on a roll
- for laser printers as A4 sheets

3.5.4 Reference identification labels

Definition

The labels enable the reference identification of the IO device components.

Due to the standard markings for printing, the reference identification label is suitable for automatic labeling with E-CAD systems.

Description

The reference identification labels (according to EN 81346) can be attached to every interface module, BusAdapter and I/O module.

The reference identification labels have the following design:



The labels can be ordered as accessories:

for thermal transfer and inkjet printers on a sheet

3.5.5 Color-coded labels

Definition

The color-coded labels are module-specific labels for color coding the potentials of the I/O modules.

Description

A color code (Color Code, e.g. CC01) is printed on each color-coded label and I/O module. The color code can be read directly on the I/O module to determine which color-coded label you need for the terminal block.

The following color-coded labels are available:

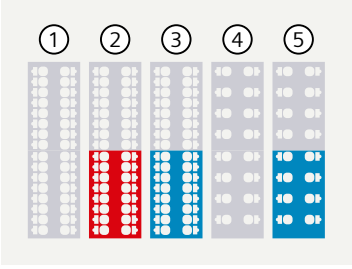

1. CC00
2. CC01
3. CC02
4. CC40
5. CC42

3.5.6 Server module

Definition

The server module completes the configuration of the IO device.

Description

The server module has the following design:

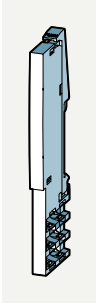

3.5.7 TM cover (slot cover)

Definition

The slot cover TM-Cover protects or reserves a slot without I/O module.

Description

The structure of the TM-Cover slot cover is as follows:

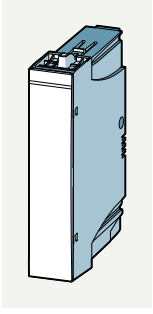

Figure 3-1 TM cover

The slot covers have a holder for the reference identification label on the left exterior. In the event of an expansion of an IO device later in time, remove the reference identification label from the holder and insert it on the new I/O module. Reference identification labels cannot be attached to a slot cover itself.

You can insert a label strip for the planned I/O module on the front of the slot cover.

3.6 Factory markings

Definition

The markings support the installation of the modules and the configuration of the distributed I/O with existing modules.

Description

The following markings are applied in the delivery state:

- Module labeling (Page 38)
- Color coding of the I/O module classes (Page 39)
- Color coding of the potential group (Page 40)
- Color coding of the spring releases (Page 41)

3.7 Labeling and coding

3.7.1 Module labeling

Definition

The module labeling provides information about properties of a specific module.

Description

The following module labeling is applied:

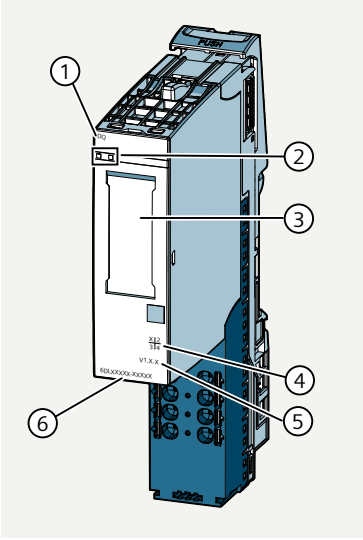

① Type of I/O module
② Labeling of the LED
③ Labeling strips (plant-specific labeling is possible)
④ Article number
⑤ Function version

3.7.2 Color coding of the I/O module classes

Definition

The color coding of the I/O module classes indicates the basic type of the I/O module classes of the respective module.

Description

The color coding of the I/O module classes is displayed as follows:

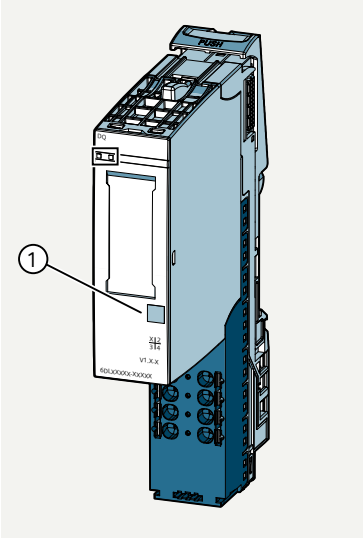

① Color coding of the I/O module classes (basic types)

The following basic types of I/O module classes are available:

Identifier for	Markings or colors	
Digital input module	white	
Digital output module	black	
Analog input module	light blue	
Analog output module	dark blue	
Universal input/output module	bright gray-green (IP Basic)	
F-digital input module	white-yellow	
F-digital output module	black-yellow	
F-analog input module	light blue-yellow	

3.7.3 Color coding of the potential group

Definition

The color coding of the potential group indicates whether a potential group is opened or extended.

Description

The potential groups are displayed as follows:

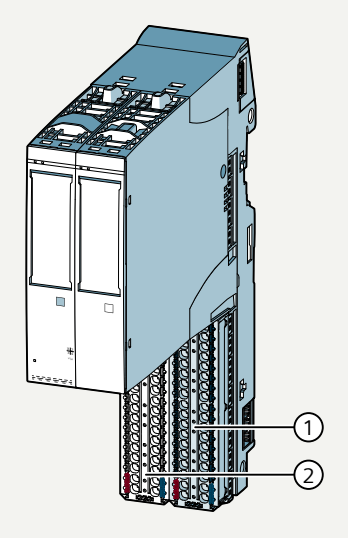

① Extending the potential group (dark gray terminal block)
② Opening the potential group (light gray terminal block)

Note

There are also terminal blocks with black cover. Black terminal blocks have no power bus function and cannot form potential groups with neighboring modules.

3.7.4 Color coding of the spring releases

Definition

The color coding of the spring releases provides information about the voltage to be connected.

Description

The color coding of the spring releases is displayed as follows:

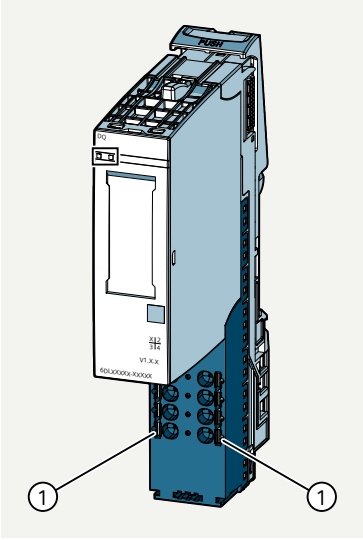

① Measuring point - voltage of the voltage buses in the dark gray terminal block (red, blue)
② Terminals for the supply voltage in the light gray terminal block (red, blue)
③ Process terminals (gray, white)

Plant planning

4

4.1 Network design options

Definition

The PROFINET network can be designed in various topologies.

Description

The following network topologies can be set up:

- Linear (Page 43)
- Ring (Page 44)
- Star (Page 44)
- Tree (Page 45)
- Network (Page 45)

4.2 Topology

4.2.1 Linear

Definition

All the communication nodes are connected in a linear bus topology.

If a connecting element (for example, a switch) fails, data exchange beyond the failed connecting element is no longer possible.

Description

For PROFINET, the linear bus topology is implemented with switches that are integrated into the IO devices. Therefore, the linear bus topology at PROFINET is merely a special form of tree / star topology.

Linear bus topology structures require the least wiring.

The line topology has the following form:



4.2.2 Ring

Definition

Ring topologies increase the network availability.

In ring topologies, a linear topology is connected to a ring through a so-called redundancy manager.

Redundancy manager (Page 78)

Description

The ring topology has the following form:



4.2.3 Star

Definition

When IO devices are connected to a switch with more than two PROFINET ports, a star topology arises automatically.

When an individual IO device fails, the network as a whole is not affected by a failure in the star topology. The failure of the switch results in the failure of the IO devices connected to this switch.

Description

The star topology has the following form:



4.2.4 Tree

Definition

The tree topology is an interconnection of multiple star-shaped topologies.

4.2.5 Network

Definition

All IO devices connected via switches are located in one and the same network. All IO devices in a network can communicate directly with one another.

The subnet mask is identical for all IO devices in the same network.

A network is physically limited by a router.

Note

When IO devices are to communicate with one another across network boundaries, you must configure the router in such a way that it permits this communication.

The communication from PROFINET IO functions exclusively within a network. You have the option of connecting various PROFINET IO networks via PN/PN coupler.

4.3 Notes on the safe use of the ET 200SP HA

All components of the ET 200SP HA distributed IO system are classified as open equipment in accordance with the standards for electrical devices.

Note

You must ensure the following for the operation of the ET 200SP HA:

- Only authorized, trained or approved personnel have access to the distributed IO system (e.g. protection by enclosure, control cabinet or control room).
- The ambient conditions for the distributed I/O have been taken into account in the plant.

Mechanical and climatic environmental conditions (Page 183)

Enclosure

The ET 200SP HA must be installed in a suitable enclosure.

For safe use, the following conditions must be guaranteed for the enclosure:

- Minimum IP 54 degree of protection according to EN/ISO 60529
- Resistance to spreading of fire
- Strength according to UL 61010-1 and UL 61010-2-201

External power supply to modules

Even when the main supply to the system has been disconnected, externally supplied modules may still be energized. Electric shock from contact with live parts may result in death or serious injury.

Specific modules of SIMATIC systems, such as relay modules, allow you to connect or switch voltages greater than 24 V DC, e.g. 230 V AC. In some applications, the modules are supplied with voltages from outside the system (external power supply). When supplied by an external power supply, these modules may still carry a voltage that is dangerous to touch, even when the system has been disconnected from power.

Maintenance

Ensure the following before commencing work:

- The system is completely de-energized.
- All externally supplied system components are de-energized.

Dangerous voltage due to permissible electric potential differences

Due to the permissible electric potential difference, voltage that is dangerous to touch may be present at the module inputs. Electric shock from contact with live parts may result in death or serious injury.

Some SIMATIC modules, such as analog input modules, have isolated channels. In this case, there is no connection between the potential of the sensor and the potential of the module. If a dangerous voltage within the permissible electric potential difference occurs at the sensor, this voltage may also be present at the measurement channel of the module.

You can find the permissible electric potential differences in the technical specifications of the module
Equipment Manuals.

Maintenance

Ensure the following before commencing work:

- The system is completely de-energized.
- All externally supplied system components are de-energized.

Pollution degree

The ET 200SP HA may only be used in an environment with no more than pollution degree 2 (as defined in EN/ISO 60664-1).

Use in cUL zones

- This equipment must be mounted in an UL/cUL AEx/Ex enclosure certified for use in Class I, Zone 2, Groups IIc minimum and rated IP54 minimum in accordance with IEC 60529 when used in Class I, Zone 2 environment such that the equipment is only accessible with the use of a tool.
- Provisions shall be made, external to the apparatus, to provide the transient protection device to be set at a level not exceeding 140% of the rated voltage at the input terminals of this apparatus.
- Device shall only be used in an area of not more than pollution degree 2, as defined in EN 60664-1.

Use in hazardous area Zone 2

- A permissible installation location is below the maximum permissible installation height of 2000 m above sea level.
- The following applies to the suitability of the enclosure:

Area of application with validity of the standards	Requirement
EN/ISO 60079-0	At least manufacturer's certification for zone 2

⚠ WARNING

Explosion hazard

If the electric circuit is live, the following must be observed:

- Do not disconnect the device in a flammable or combustible atmosphere.
- Do not open the enclosure in a flammable or combustible atmosphere.

⚠ WARNING

Area of application

This equipment is only suitable for use in Class I, Division 2, Groups A, B, C, D; Class I, Zone 2, Group IIC environments or non-hazardous locations.

NOTICE

Removal and replacement

When you replace components, compliance with Class I, Division 2 may become invalid. Replacing components can affect the usability of the device.

4.4 Notes on the power supply (SELV/PELV)

Safety functional extra low voltage

Ensure that the supply and input voltages of the I/O system are generated safely separately U_{rated}= 24 V DC +-20% (⎓).

Power supply according to the following standards:

- EN / IEC / UL 61010-2-201
  This safe functional extra low voltage with the required protection is called SELV (Safety Extra Low Voltage) / PELV (Protective Extra Low Voltage).

or

- NEC Class 2, as in National Electrical Code (r) (ANSI/NFPA 70)

If the device is connected to a redundant power supply (two separate power supplies), both power supplies must meet these requirements.

Requirements on the power supply (SELV/PELV)

You must ensure that the following requirements are observed for operation of the I/O device:

- The supply and input voltages of the I/O device are functional extra low voltages.
- The supply and input voltages have a protective separation.
- If sensors and actuators at I/O modules are supplied externally, these sensors and actuators are connected via safe functional extra low voltage.
- Each additional circuit (24 V DC) used in the I/O system is connected via safe functional extra low voltage.
  See the corresponding data sheets or consult the manufacturer.

All system components that can supply electrical energy in any form meet these requirements.

See the assembly instruction in the respective documentation of the component used.

Safety of equipment

Ensure that all necessary arrangements have been made for the intended use of the equipment. You can find more information on this in the equipment documentation. If the equipment safety depends on SELV or PELV circuits, the equipment is labeled with an "X" in accordance with EN / IEC 60079-0.

Load circuit

The following options exist for supplying the sensors and actuators:

- Supply via the I/O modules
- Supply via own power supplies (e.g. for 4-wire transmitters)

Pay attention to the power supply from safe functional extra low voltage.

You can find information on the connection of sensors and actuators in the documentation of the I/O modules.

4.5 Notes on the operation of the IO device on a grounded power supply

This section provides information on the overall configuration of an IO device based on the ET 200SP HA distributed I/O system on a grounded power supply (e.g. TN-S network).

Grounded incoming supply (Page 49)

The specific subjects discussed are:

- Shutdown devices, short-circuit and overload protection according to EN / IEC 60364 and EN / IEC 60204
- Power supplies and load power circuits

Installing the IO device with ungrounded reference potential

An ungrounded configuration of the IO device is always possible since there is no fixed ground connection on the IO device. The power supply used (power pack / power supply module / battery) for 24 V DC must also be ungrounded and electrically isolated.

IO device with ungrounded reference potential (Page 50)

If you want to install the IO device with grounded reference potential, electrically connect the 1M connector to the protective conductor.

Short-circuit / overload protection

Various measures as protection against short-circuits and overloads are required for setting up a full installation.

The type of components and the binding protective measures depend on which EN / IEC regulation applies to your system configuration.

Example of a power supply and grounding concept in the overall configuration (Page 51)

4.6 Power input

4.6.1 Grounded incoming supply

Definition

When a plant is in operation, the current flows across the neutral conductor. When a fault occurs, for example, a single ground fault between a live conductor and ground, the current flows through the protective conductor.

Description

In the case of grounded incoming supplies (TN-S system) the neutral conductor (N) and the protective conductor (PE) are each grounded. Both conductors form a part of the overvoltage concept.

4.6.2 IO device with ungrounded reference potential

Definition

This configuration conducts high-frequency interference currents and prevents static charges.

Description

To discharge interference current, the reference potential of the interface module and the light gray or black terminal blocks must be connected internally via an RC combination to the mounting rail (protective conductor).

(The following applies in this case: IM: R = 10 MΩ / C = 100 nF, light gray / black terminal block: R = 10 MΩ / C = 4 nF)

4.6.3 Example of a power supply and grounding concept in the overall configuration

Example

The following figure shows the IO device based on the ET 200SP HA distributed I/O system in its overall configuration (supply voltage and grounding concept) when supplied from a TN-S network.

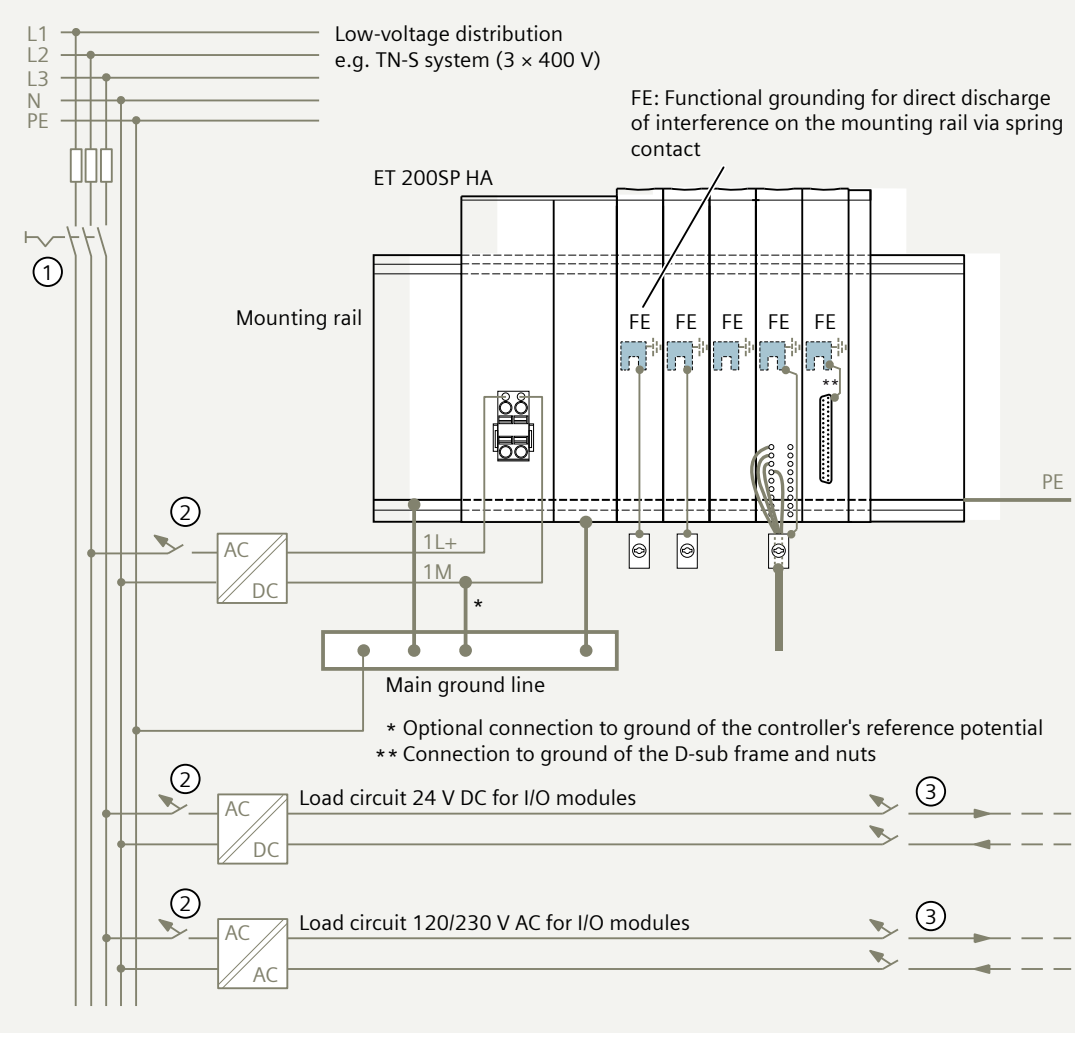

Reference for the figure	EN / IEC 60364	EN / IEC 60204	Protective measures and areas of applications
①	Main switch	Disconnector	Shutdown device for controllers, signal transmitters and actuators
②	Galvanic isolation by transformer recommended	Galvanic isolation by transformer recommended	Disconnector / protection element for load power supply for AC load circuits with more than five electromagnetic devices
② / ③	Single-pole protection of circuits	Load power circuit • With grounded secondary circuit: single-pole protection • otherwise: Secure all pins	Short-circuit / overload protection: In groups for sensors and actuators

4.7 Potential relationships in the IO device

Definition

The following potential relationships apply in the IO device based on the ET 200SP HA distributed IO system:

- Same potential:
  - The same potential only exists for the supply voltages of I/O modules of one potential group.
    Potential groups (Page 58)
- There is electrical isolation between:
  - The power circuits of the supply voltage/process signals and all other circuit elements of the IO device.
  - The communication interfaces of the interface module (PROFINET) and all other circuit elements of the IO device.

4.8 Hardware configuration

4.8.1 Maximum mechanical configuration

Definition

The configuration of an IO device based on the ET 200SP HA distributed I/O is limited by rules. The maximum mechanical configuration has been reached as soon as one of the rules applies.

Description

The following rules have been specified for the maximum mechanical configuration:

Properties	Rule
Number of modules	Maximum of 56 slots for I/O modules, regardless of their use
Backplane bus length of the IO device	Maximum configuration width (without interface module) = 1.3 m Even number of I/O modules (max. 56) x width of the I/O modules in the IO device (22.5 mm) + server module (5 mm) = 1265 mm Observe the width of the carrier modules (45 mm/180 mm).
Configuration	Read section "Minimum clearances in the control cabinet (Page 90)".

4.8.2 Maximum electrical configuration

Definition

The maximum number of I/O modules contained in a potential group is limited due to the permissible load current of a potential group.

Description

The permissible load current of a potential group (supply voltage L+/M on the light gray terminal block) is distributed into the following shares:

- Power requirements of all I/O modules
- Power requirements of the components supplied via these I/O modules

Permissible load current depending on the number of installed terminal blocks:

Number of terminal blocks	Permissible load current in amperes
4	10
5	8
6	7
7	6
8	5
10	4
15	3
20	2

4.8.3 Address space

Definition

The address space is the number of possible addresses in a memory.

Description

The address space depends on the following components used:

- Interface module
- IO controller/IO device

4.9 Configurations of the slots of I/O modules

4.9.1 Selection of the terminal blocks:

Definition

The selection of the terminal blocks specifies the main properties for use of the I/O modules.

Description

Select the terminal block for the slot of an I/O module based on the following dependencies:

- Definition of I/O modules associated with a potential group
- Requirement for configuring redundant I/O modules
- Parameters of the required I/O module (number of process terminals, temperature detection)
- Fast wiring via D-SUB plug-in connectors

When using carrier modules without a power bus, the light gray or black terminal blocks must be used for the supply of the I/O modules.

The I/O module required in the plant requires an adequate terminal block. The adequate terminal blocks are marked by an "x" in the table.

I/O module	Terminal blocks											
	TB 24V								ISOL TB			
	H1	M1	P0	N0	F1	H0	M0	F0	K0	L0	S0	R0
	Push-In	Push-In	Push-In	Push-In	Push-In	D-SUB	D-SUB	D-SUB	Push-In	Push-In	D-SUB	D-SUB
	Single	IO redundancy	L+ terminals	M terminals	IO redundancy	Single	IO redundancy	IO redundancy	Single	IO redundancy	Single	IO redundancy
DI 32x24VDC HA	x		x	x [1]		x						
DI 16x24VDC HA	x	x		x [1]		x	x					
DI 16xNAMUR HA	x	x		x [1]		x	x					
DI 16x24VDC NPN	x					x						
F-DI 16x24VDC HA	x	x		x [1] [3]		x	x					
F-DI 16xNAMUR HA	x		x	x		x						
DI 8x125VDC HA									x			
DI 8x230VAC HA	x	x		x					x			
DQ 8x 24V... 230VAC/2A									x			
DQ 16x24V/ 0.5A HA	x	x		x [1]		x	x					
DQ 32x24V/ 0.5A HA	x			x		x						
F-DQ 10x24VDC/2A PP HA	x	x		x [1] [3]		x	x					
RQ 4x230/5A CO HA									x			
AI-DI16/ DQ16x24VDC HART HA	x	x		x [1]		x	x					
AI 16xI 2-wire HART HA	x	x		x [1]		x	x					
AI16xTC/ 8xRTD 2-/3-/4-wire HA	x	x		x [1] [2]		x [2]	x [2]					
AI 4xI HART ISOL HA									x	x	x [4]	x [4]
F-AI 8xI 2-/4-wire HART HA	x			x [1] [3]	x	x		x				

I/O module	Terminal blocks											
	TB 24V								ISOL TB			
	H1	M1	P0	N0	F1	H0	M0	F0	K0	L0	S0	R0
	Push-In	Push-In	Push-In	Push-In	Push-In	D-SUB	D-SUB	D-SUB	Push-In	Push-In	D-SUB	D-SUB
	Single	IO redundancy	L+ terminals	M terminals	IO redundancy	Single	IO redundancy	IO redundancy	Single	IO redundancy	Single	IO redundancy
AQ 8xI HART HA	x	x		x [1]		x	x					
AQ 4xI HART ISOL HA									x	x	x [4]	x [4]
AI 16xI 2-wire HA	x			x [1]		x						
AI 8x UI RTD TC	x			x[1]		x						
Technology module "Fast Multi IO & Counter"	x	x		x		x [5]	x [5]					
Technology module "Closed Loop Controller"	x	x		x		x [5]	x [5]					
Technology module "Vibration protection module 4 channels"	x			x		x [6]						

[1] For connection of additional ground cables from the field

[2] The terminal block does not provide an internal reference temperature for temperature measurement with a thermocouple.

[3] As of S7 F Systems V6.4

[4] As of FW V1.0.1

[5] As of hardware release 3

[6] As of hardware release 2

The following terminal blocks are available:

Note

The terms "sensor supply" and "encoder supply" or "sensor" and "encoder" are synonymous in the context of this manual.

Signal voltage	Potential group	I/O Redundancy	Potential distributor or sensor supply	Process terminals	Temperature compensation for TC measurement	Terminal block type	Article number
Rated signal voltage 24 V DC	New potential group (light gray terminal block)	No	No	32	Yes	H1	6DL1193-6TP00-0DH1
		Yes	No	32	Yes	M1	6DL1193-6TP00-0DM1[1)]
		No	Yes, 32x L-distributor	32+32	No	P0	6DL1193-6TP00-0DP0[2)]
		No	Yes, 32x M-distributor	32+32	No	N0	6DL1193-6TP00-0DN0[2)]
	Potential group of the left module (dark gray terminal block)	No	No	32	Yes	H1	6DL1193-6TP00-0BH1
		Yes	No	32	Yes	M1	6DL1193-6TP00-0BM1[1)]
		No	Yes, 32x L-distributor	32+32	No	P0	6DL1193-6TP00-0BP0[2)]
		No	Yes, 32x M-distributor	32+32	No	N0	6DL1193-6TP00-0BN0[2)]
	No potential group (black terminal block)	No	No	32	No	H0; D-SUB	6DL1193-6TC00-0DH0
		Yes	No	32	No	F1	6DL1 193-6TP00-0DF1[1)]
		Yes	No	32	No	M0; D-SUB	6DL1193-6TC00-0DM0
		Yes	No	32	No	F0; D-SUB	6DL1193-6TC00-0DF0
		No	No	16	No	S0; D-SUB	6DL1193-6TC00-0DS0
		Yes	No	16	No	R0; D-SUB	6DL1193-6TC00-0DR0
24 V DC with channel isolation; 125 V DC to 230 V AC	New potential group (light gray terminal block)	No	No	16	No	K0	6DL1193-6TP00-0DK0
		Yes	No	16	No	L0	6DL1193-6TP00-0DL0[1)]
	Potential group of the left module (dark gray terminal block)	No	No	16	No	K0	6DL1193-6TP00-0BK0

[1)] These terminal blocks are to be used exclusively for operating the I/O modules in IO redundancy or as slot covers. The process terminals run parallel to the contacts of the two I/O modules.

[2)] Potential distributor

See also

Technical specifications - Terminal blocks (Page 195)

4.9.2 Potential groups

Definition

Potential groups are groups of components that are connected to a shared supply voltage.

You form the potential groups by arranging the terminal blocks for the distributed IO system ET 200SP HA.

Each light gray terminal block which you install in the IO device starts a new potential group.

Note

Terminal block type F1, H0, M0, F0, S0 and R0

- The terminal blocks do not form potential groups with downstream plugged terminal blocks.
- The missing power bus function is indicated by the black housing color of the terminal blocks.
- Dark gray terminal blocks may not be inserted to the right of these terminal blocks.

When you replace a light gray terminal block with a dark gray terminal block, the potential groups are interconnected.

Note

Voltage in a potential group

- A mixed configuration of I/O modules with different signal voltage is allowed within a potential group.
- The supply voltage for all I/O modules is 24 V DC.

Description

The following combinations are possible for configuring a potential group:

- Example for positioning terminal blocks (Page 59)
- Example of the configuration for terminal blocks with 32 process terminals (Page 60)
- Example of the configuration for terminal blocks with 32 process terminals and 32 terminal potential distributors (Page 61)
- Example of the configuration for terminal blocks with 16 process terminals (highly isolated process terminals) (Page 62)

4.9.3 Configuration examples of an IO device

4.9.3.1 Example for positioning terminal blocks

Example

Terminal blocks can be positioned as follows:

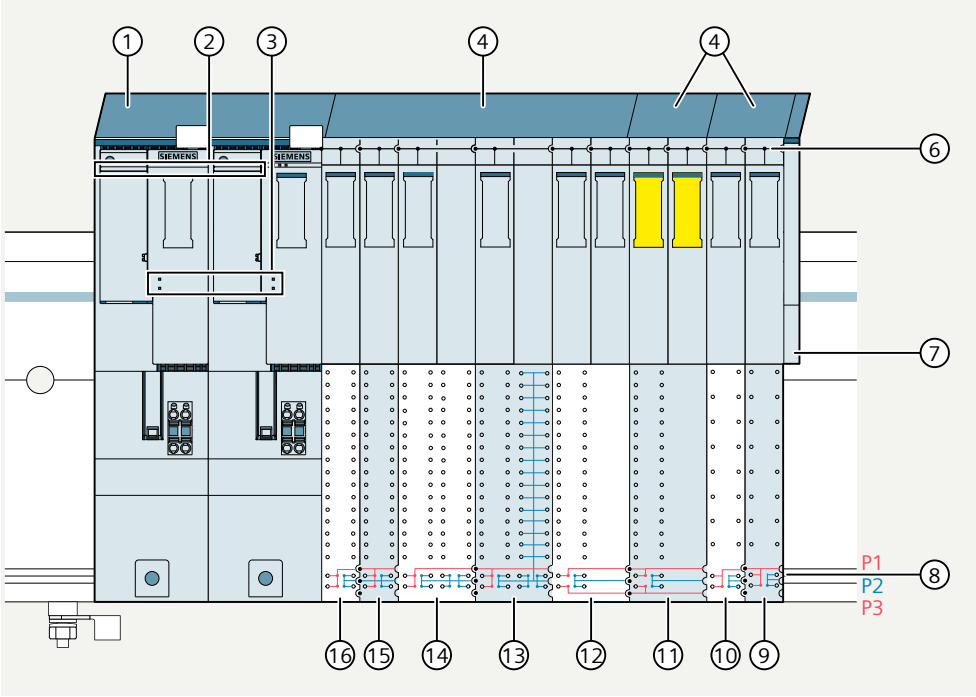

① Carrier module IM
② BusAdapter
③ Interface module (IM)
④ Carrier module 8x
⑤ Carrier module 2x
⑥ Backplane bus (hidden)
⑦ Server module
⑧ Power bus and power bus cover
⑨ Terminal block - Type K0; dark gray
⑩ Terminal block - Type K0 - light gray

Terminal block for I/O redundancy

⑪ Terminal block - Type M1 - DARK GRAY - IO redundancy
⑫ Terminal block - Type M1 - LIGHT GRAY - IO redundancy

Terminal blocks with potential distributor

⑬ Terminal block - Type N0 - DARK GRAY - 32 M
⑭ Terminal block - Type P0 - LIGHT GRAY - 32 L+

⑮ Terminal block - Type H1 - DARK GRAY
⑯ Terminal block - Type H1 - LIGHT GRAY

4.9.3.2 Example of the configuration for terminal blocks with 32 process terminals

Example

Terminal blocks with 32 process terminals can be used as follows:

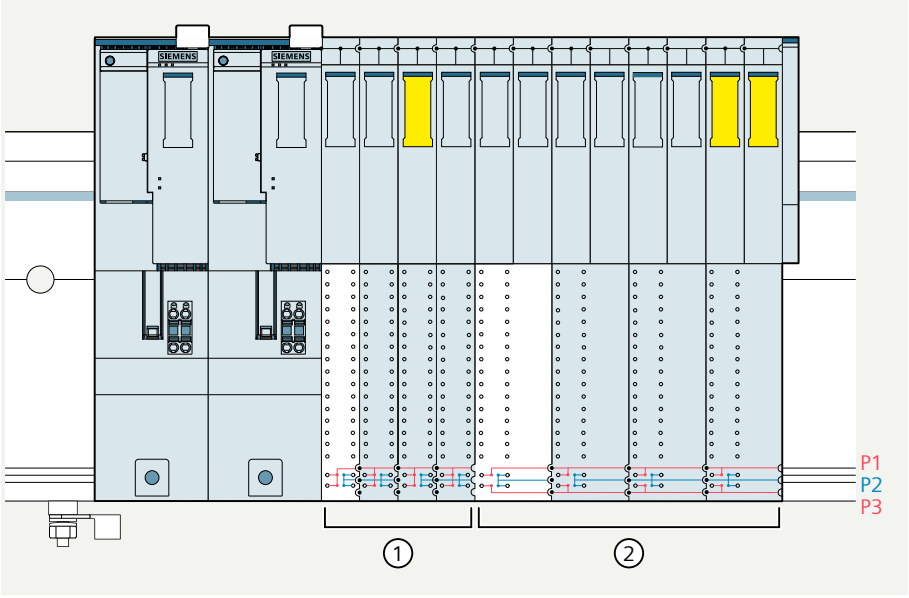

①	Potential group 1	Width: 22.5 mm Type H1 • light gray terminal block: Set up new potential group • dark gray terminal block: Use potential group of the left module
②	Potential group 2	Terminal block for IO redundancy Width: 45 mm Type M1 • light gray terminal block: Set up new potential group • dark gray terminal block: Use potential group of the left module

4.9.3.3 Example of the configuration for terminal blocks with 32 process terminals and 32 terminal potential distributors

Example

Terminal blocks with 32 process terminals and 32 terminal potential distributors can be used as follows:

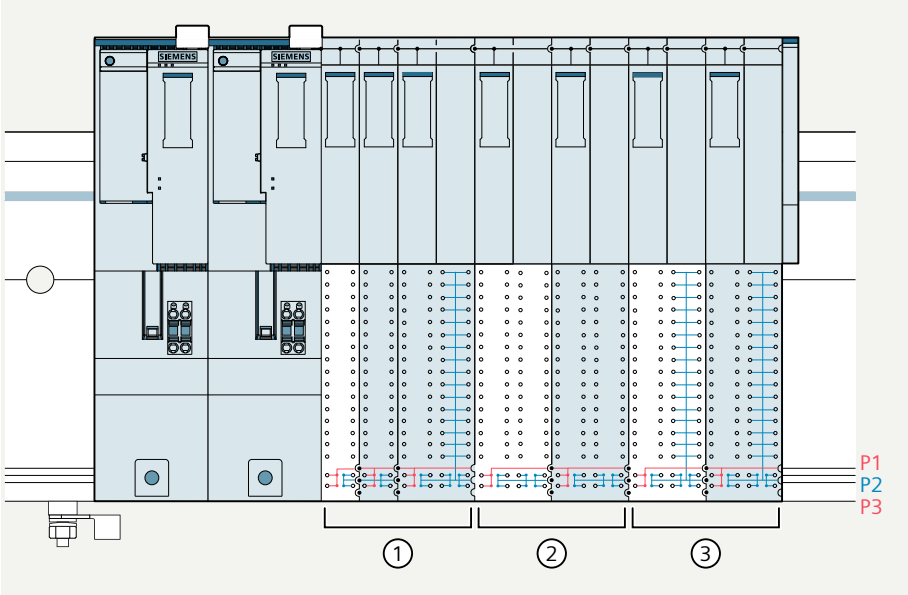

①	Potential group 1	Width: 22.5 mm Type H1 • light gray terminal block: Set up new potential group • dark gray terminal block: Use potential group of the left module
②	Potential group 2	Terminal block with L+ potential distributor Width: 45 mm Type P0 • light gray terminal block: Set up new potential group • dark gray terminal block: Use potential group of the left module
③	Potential group 3	Terminal block with M potential distributor Width: 45 mm Type N0 • light gray terminal block: Set up new potential group • dark gray terminal block: Use potential group of the left module

4.9.3.4 Example of the configuration for terminal blocks with 16 process terminals (highly isolated process terminals)

Example

Terminal blocks with 16 process terminals (highly isolated process terminals) can be used as follows:

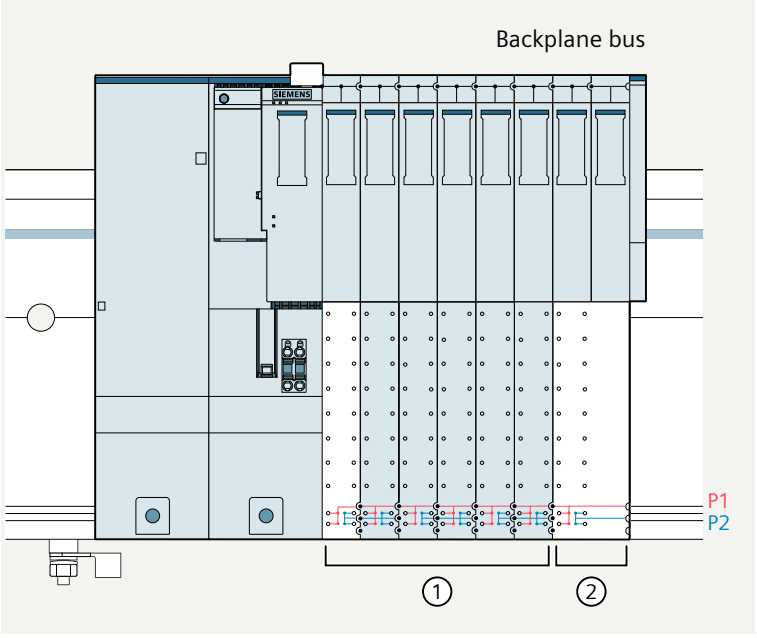

①	Potential group 1	Width: 22.5 mm Type K0 • light gray terminal block: Set up new potential group • dark gray terminal block: Use potential group of the left module
②	Potential group 2	Terminal block for IO redundancy Width: 45 mm Type L0 • light gray terminal block: Set up new potential group

4.9.4 Pin assignment of the terminal block with push-in terminals and D-SUB connector

Definition

The terminal assignment provides information about the arrangement and marking of the terminals when wiring a connector.

Description

The general pin assignment of a terminal block field with push-in terminals paired with the 37-pin D-SUB connector is as follows:

Terminal block with push-in terminals					Terminal block with D-SUB connector				
No.	**Signals**	**Scheme**	**Signals**	**No.**	**Pin no.**	**Signals**	**Scheme**	**Signals**	**Pin no.**
1	Terminal_01	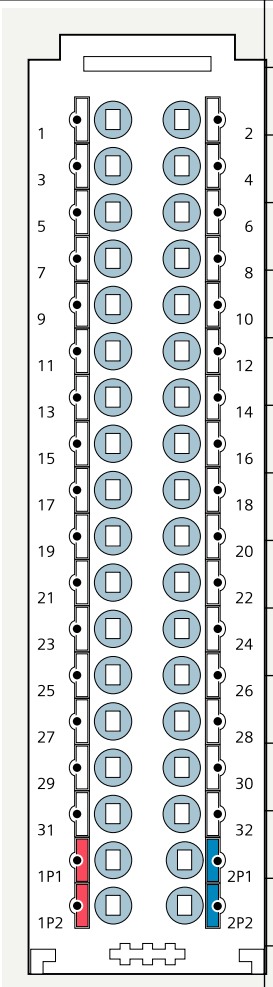	Terminal_02	2	20	Terminal_17	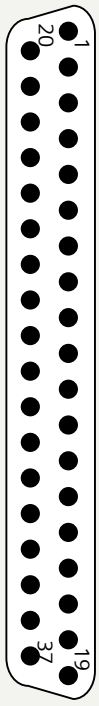	Terminal_01	1
3	Terminal_03		Terminal_04	4	21	Terminal_18		Terminal_02	2
5	Terminal_05		Terminal_06	6	22	Terminal_19		Terminal_03	3
7	Terminal_07		Terminal_09	8	23	Terminal_20		Terminal_04	4
9	Terminal_09		Terminal_10	10	24	Terminal_21		Terminal_05	5
11	Terminal_11		Terminal_12	12	25	Terminal_22		Terminal_06	6
13	Terminal_13		Terminal_14	14	26	Terminal_23		Terminal_07	7
15	Terminal_15		Terminal_16	16	27	Terminal_24		Terminal_08	8
17	Terminal_17		Terminal_18	18	28	Terminal_25		Terminal_09	9
19	Terminal_19		Terminal_20	20	29	Terminal_26		Terminal_10	10
21	Terminal_21		Terminal_22	22	30	Terminal_27		Terminal_11	11
23	Terminal_23		Terminal_24	24	31	Terminal_28	D-SUB connector	Terminal_12	12
25	Terminal_25		Terminal_26	26	32	Terminal_29		Terminal_13	13
27	Terminal_27		Terminal_28	28	33	Terminal_30		Terminal_14	14
29	Terminal_29		Terminal_30	30	34	Terminal_31	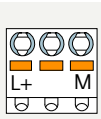	Terminal_15	15
31	Terminal_31		Terminal_32	32	35	Terminal_32		Terminal_16	16
1P1	L+		M	1P2	36		X80 / X81		17
2P1	L+		M	2P2	37				18
									19

Table 4-1 Assignment terminals to D-SUB pin number (terminal blocks H0, M0, F0)

Push-in terminals	D-SUB connector	Push-in terminals	D-SUB connector
No.	**Pin no.**	**No.**	**Pin no.**
1	1	**17**	20
2	2	**18**	21
3	3	**19**	22
4	4	**20**	23
5	5	**21**	24
6	6	**22**	25
7	7	**23**	26
8	8	**24**	27
9	9	**25**	28
10	10	**26**	29
11	11	**27**	30
12	12	**28**	31
13	13	**29**	32
14	14	**30**	33
15	15	**31**	34
16	16	**32**	35
	17		36
	18		37
	19		

Note

Wiring of the connections

- When wiring the connections on the D-SUB connector, note the shift starting with no. 17.
- The power supply is connected to the terminal block with D-SUB connector via the separate X80 connector (with redundancy of X80 and X81).

Terminal block field (ISOL)

The general pin assignment of a terminal block field with push-in terminals (ISOL) paired with the 37-pin D-SUB connector (ISOL) is as follows:

Terminal block ISOL with push-in terminals					**Terminal block ISOL with D-SUB connector**				
No.	**Signals**	**Scheme**	**Signals**	**No.**	**Pin no.**	**Signals**	**Scheme**	**Signals**	**Pin no.**
1	Terminal_01	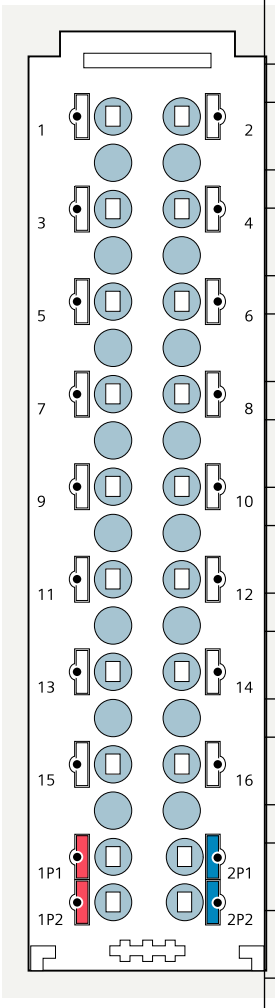	Terminal_02	2	20	Terminal_09	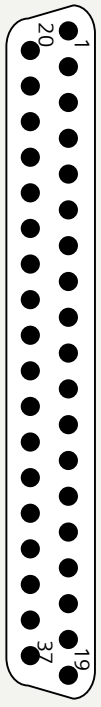	Terminal_01	1
					21				2
3	Terminal_03		Terminal_04	4	22	Terminal_10		Terminal_02	3
					23				4
5	Terminal_05		Terminal_06	6	24	Terminal_11		Terminal_03	5
					25				6
7	Terminal_07		Terminal_08	8	26	Terminal_12		Terminal_04	7
					27				8
9	Terminal_09		Terminal_10	10	28	Terminal_13		Terminal_05	9
					29				10
11	Terminal_11		Terminal_12	12	30	Terminal_14		Terminal_06	11
					31				12
13	Terminal_13		Terminal_14	14	32	Terminal_15		Terminal_07	13
					33				14
15	Terminal_15		Terminal_16	16	34	Terminal_16		Terminal_08	15
					35		D-SUB connector		16
1P1	L+		M	1P2	36				17
2P1	L+		M	2P2	37				18
		Terminal_block_ISOL					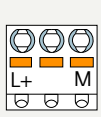 X80		19

Table 4-2 Assignment terminals to D-SUB pin number (terminal blocks R0, S0)

Push-in terminals	**D-SUB connector**
No.	**Pin no.**
1	1
2	3
3	5
4	7
5	9
6	11
7	13
8	15
9	20
10	22
11	24
12	26
13	28
14	30
15	32
16	34

4.9.5 Terminal blocks

4.9.5.1 Terminal block with sensor supply (L+ potential)

Definition

The terminal block with potential distributor (L+ potential) offers the following properties:

- Separate protection so that "only" the affected channel fails in the event of a short circuit or overload.
- A failure does not affect the entire system.

The L+ terminals on the potential distributor are connected individually using automatic circuit breakers to a maximum of 20 mA.

Description

Use the following terminal block to connect 2-wire sensors:

Article No.	**Function/parameter**
6DL1193-6TP00-0**DP**0	Set up new potential group (light gray terminal block)
6DL1193-6TP00-0**BP**0	Use potential group of the left module (dark gray terminal block)

The pin assignment on the left side of the terminal blocks with a potential distributor should be set in accordance with the configured I/O module.

The potential distributor with the following terminals is located on the right side of the terminal block:

- 32 L+ terminals for power supply of sensors.
- Four M terminals

Note

- The L+ terminals on the potential distributor are intended exclusively for the sensors connected to the I/O module using a 2-wire connection system.
- You may not use these terminals as voltage source for other devices in the system.

4.9.5.2 Pin assignment (L+ potential)

Definition

The pin assignment provides information about the arrangement and marking of the connections when wiring the right-hand side of the terminal block with potential distributor (L+ potential) (terminals 33 to 64).

Description

The pin assignment of the terminal blocks with potential distributor is structured as follows:

Terminal	Assignment	Terminal	Assignment	Explanations
33	L+	**34**	L+	L+: Supply voltage L+, for sensors, individually fused 20 mA (24 V DC) 3P2: Ground reference of the voltage bus 1P 4P2: Ground reference of the voltage bus 2P 5P2: Ground reference of the voltage bus 1P 6P2: Ground reference of the voltage bus 2P
35	L+	**36**	L+	
37	L+	**38**	L+	
39	L+	**40**	L+	
41	L+	**42**	L+	
43	L+	**44**	L+	
45	L+	**46**	L+	
47	L+	**48**	L+	
49	L+	**50**	L+	
51	L+	**52**	L+	
53	L+	**54**	L+	
55	L+	**56**	L+	
57	L+	**58**	L+	
59	L+	**60**	L+	
61	L+	**62**	L+	
63	L+	**64**	L+	
3P2	M	**5P2**	M	
4P2	M	**6P2**	M	

4.9.5.3 Terminal block with potential distributor (M potential)

Definition

The terminal block with potential distributor (L+ potential) offers the following properties:

- Separate protection so that "only" the affected channel fails in the event of a short circuit or overload.
- A failure does not affect the entire system.

Description

Use the following terminal block to connect 2-wire sensors:

Article number	Function/parameter
6DL1193-6TP00-**0D**N0	Set up new potential group (light gray terminal block)
6DL1193-6TP00-**0B**N0	Use potential group of the left module (dark gray terminal block)

The pin assignment on the left side of the terminal blocks with a potential distributor should be set in accordance with the configured I/O module.

36 M terminals are located on the right side of the potential distributor.

Note

Connection information

- The M terminals on the right side are intended exclusively for the loads connected to the I/O module using a 2-wire connection system. You may not use these terminals as the ground terminals for other devices in the system.
- Ensure that the total current does not exceed 10 A for the entire potential group.

4.9.5.4 Pin assignment (M potential)

Definition

The pin assignment provides information about the arrangement and marking of the connections when wiring the right-hand side of the terminal block with potential distributor (M potential) (terminals 33 to 64).

Description

The pin assignment of the terminal blocks with potential distributor is structured as follows:

Terminal	Assignment	Terminal	Assignment	Explanations
33	M	**34**	M	M33 to M64: Supply voltage ground reference
35	M	**36**	M	3P2: Ground reference of the voltage bus 1P
37	M	**38**	M	4P2: Ground reference of the voltage bus 2P
39	M	**40**	M	5P2: Ground reference of the voltage bus 1P
41	M	**42**	M	6P2: Ground reference of the voltage bus 2P
43	M	**44**	M	
45	M	**46**	M	
47	M	**48**	M	
49	M	**50**	M	
51	M	**52**	M	
53	M	**54**	M	
55	M	**56**	M	
57	M	**58**	M	
59	M	**60**	M	
61	M	**62**	M	
63	M	**64**	M	
3P2	M	**5P2**	M	
4P2	M	**6P2**	M	

4.10 Changes in Runtime and redundancy

4.10.1 Notes on changes during runtime and redundancy

This section contains the following:

- Allow changes to the plant in RUN of the IO controller (CiR and H-CiR)
- Options for increasing the availability of a plant with an IO device based on the ET 200SP HA distributed I/O.

Allow changes to the plant in RUN of the IO controller (CiR and H-CiR)

You can use the ET 200SP HA to create hardware configurations that allow certain changes to be made during ongoing operation under defined conditions.

Note

F-I/O modules

Using CiR / H-CiR, you have the following options to adapt the distributed I/O:

- Add new F-I/O modules to the system
- Remove existing F-I/O modules from the system

Re-configuration of the F-I/O modules is not supported.

The following procedures should be followed to perform the changes.

- Use of CiR (Configuration in RUN in a system with a single CPU - 1oo1)
  You can perform certain configuration changes during operation.
- Use of H-CiR (Configuration in RUN in a system with a redundant CPU - 1oo2)
  You can make configuration changes to plant units with redundant CPUs during operation.

Basic redundancy configurations

You can increase the availability of the distributed I/O by implementing redundancy configurations in the plant. Multiple redundancy configurations can be combined.

The figure below shows an example of some of the possible redundancy configurations:

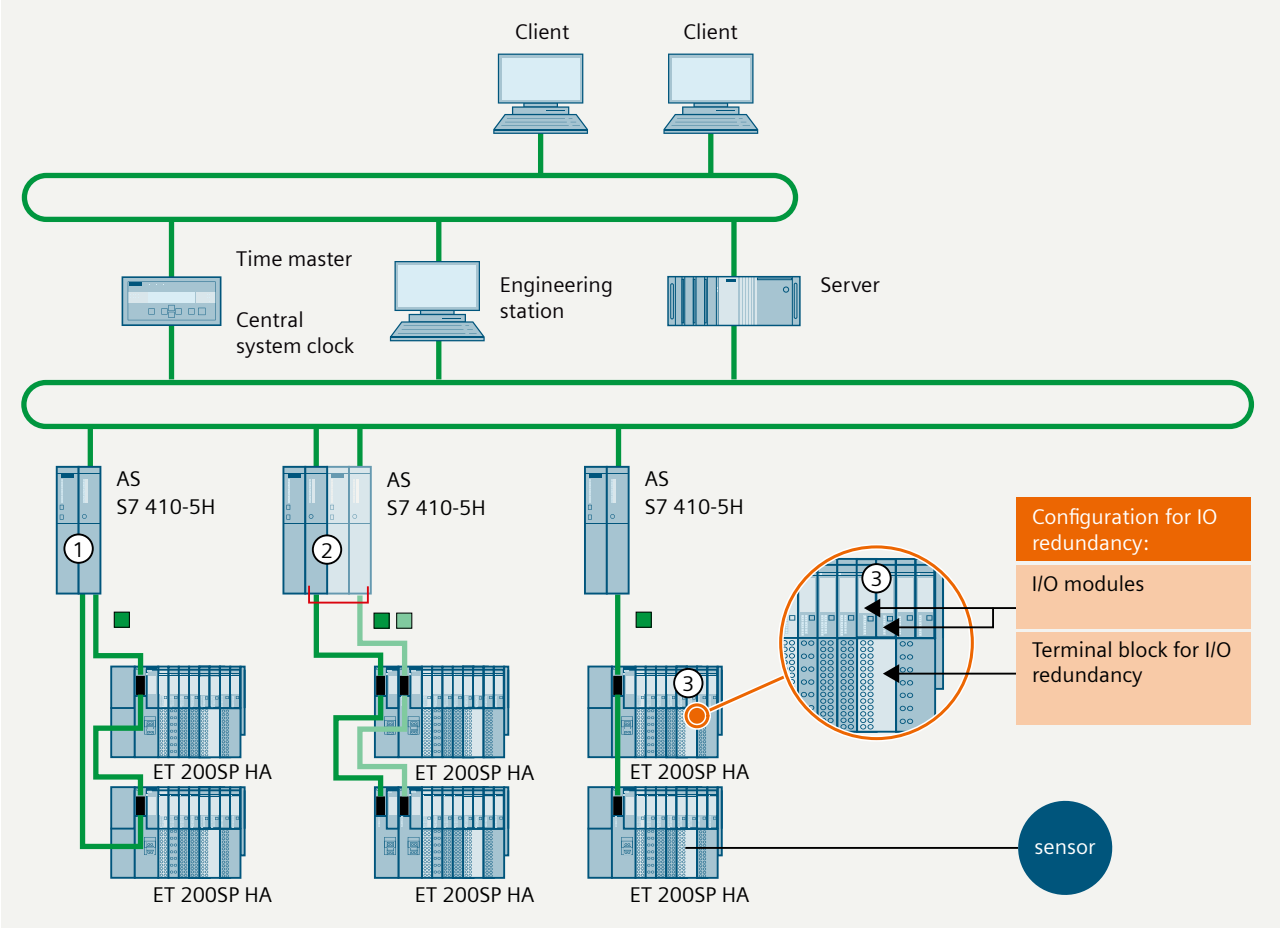

Configuration	① Media redundancy	② System redundancy	③ IO redundancy
Brief information	Use Media Redundancy Protocol (MRP)	Connection via redundant media (2 subnets) and/or redundant interface modules	Use of redundant I/O modules in an IO device
Configuration example: See section:	Notes on connecting the IO device via media redundancy (Page 75)	Notes on connecting the IO device via system redundancy (Page 71)	Notes on connecting the IO device via IO redundancy (Page 78)

4.10.2 Notes on connecting the IO device via system redundancy

Connection of the IO device with system redundancy

IO devices are connected to a redundant IO controller.

With system redundancy, all redundantly used components are in continuous operation.

Failure behavior for IO devices with system redundancy (Page 73)

Configuration

The following figure shows examples for the connection of the IO devices to the H-system.

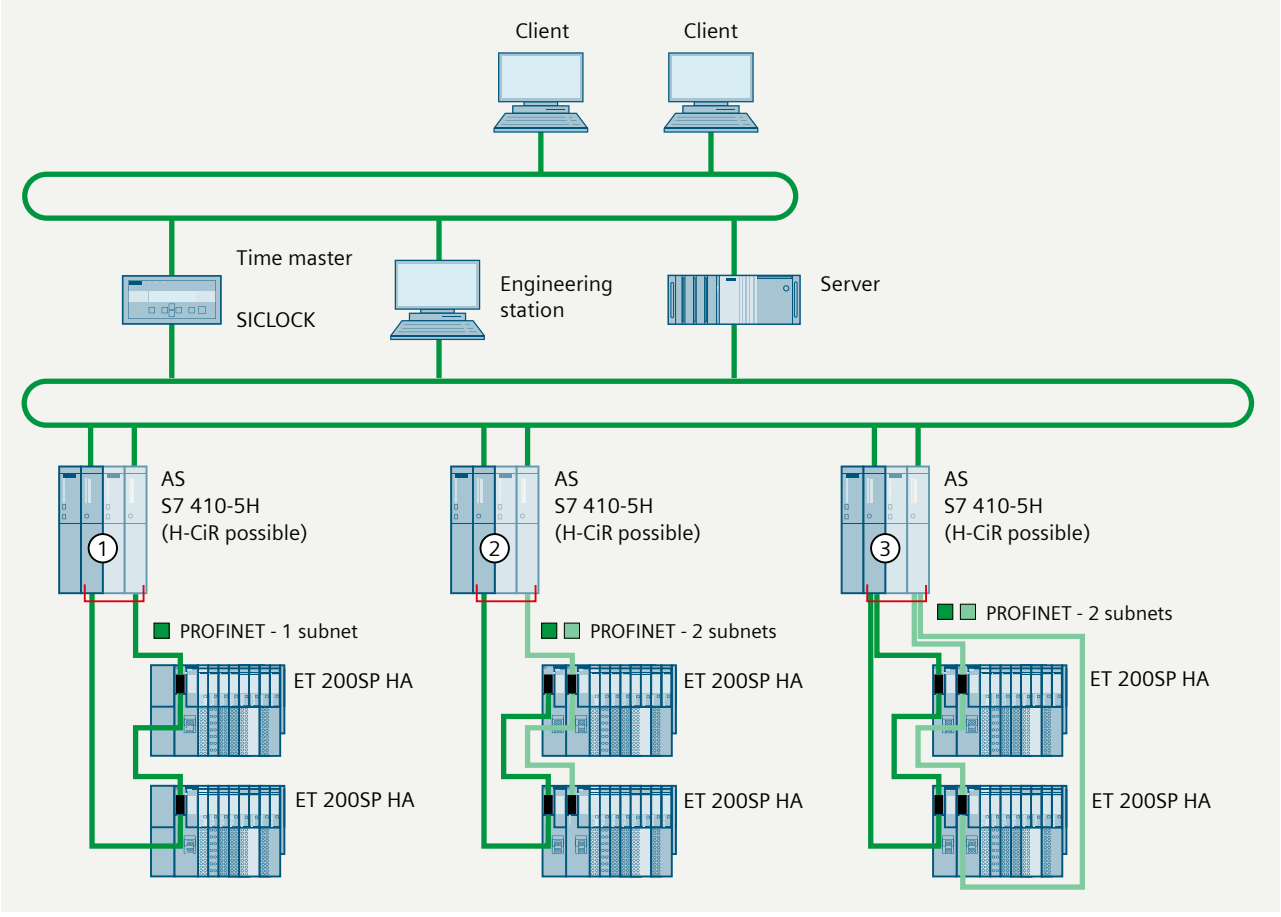

① Application planning of the IO device with system redundancy (1 subnet) (Page 73)
② Application planning of the IO device with system redundancy (2 subnets in line structure) (Page 73)
③ Application planning of the IO device with system redundancy and media redundancy (2 subnets in ring structure) (Page 74)

Maintenance and service

One of the following functions is possible in runtime:

- Connecting and removing IO devices
- Replacing PROFINET cables
- Replacing a CPU

4.10.3 Connection via system redundancy

4.10.3.1 Failure behavior for IO devices with system redundancy

Definition

When a redundancy partner fails, the function is maintained when the master role is assumed or a different communication path is selected.

The following applies when a CPU or PROFINET cable fails:

The IO devices continue to be available in the PROFINET IO system.

4.10.3.2 Application planning of the IO device with system redundancy (1 subnet)

Definition

With system redundancy with 1 subnet, the hardware consists of an IO device with 1 interface module.

Description

Observe the following rules for configuring the IO devices:

Coupling	
Mounting rule	No special considerations
Subnet configuration	The PROFINET IO system begins and ends at an IO controller.
Media redundancy	Possible
Node name	The nodes on the fieldbus (PROFINET IO) must be assigned unique names.
Network connections (example)	• Network1: CPU (0) X5 port 1 + CPU (1) X5 port 1

4.10.3.3 Application planning of the IO device with system redundancy (2 subnets in line structure)

Definition

With system redundancy with 2 subnets in a line structure, the hardware consists of a redundant IO device with 2 interface modules.

Description

Observe the following rules for configuring the IO devices:

Coupling	
Mounting rule	Redundantly used interface modules must be identical. For this, they must have the same item number and hardware function or firmware version.
Subnet configuration	An interface module is connected to each of the two IO controllers. The PROFINET IO systems can be created in a subnet.
Media redundancy	Possible
Node name	The nodes on the fieldbus (PROFINET IO) must be assigned unique names.
Network connections (example)	• Network1: CPU (0) X5 port 1 • Network2: CPU (1) X5 port 1
Activation of type R1 system redundancy	• Via license key on the SEC of the CPU • Execution such as upgrading the System Expansion Card of a CPU 410-5H

4.10.3.4 Application planning of the IO device with system redundancy and media redundancy (2 subnets in ring structure)

Definition

With system redundancy and media redundancy with 2 subnets in a ring structure, the hardware consists of a redundant IO device with 2 interface modules.

Description

Observe the following rules for configuring the IO devices:

Coupling	
Mounting rule	Redundantly used interface modules must be identical. For this, they must have the same item number and hardware function or firmware version.
Subnet configuration	An interface module is connected to each of the two IO controllers. The PROFINET IO systems can be created in a subnet.
Media redundancy	Yes: The subnet ring is closed by the MRP connection to the same CPU.
Node name	The nodes on the fieldbus (PROFINET IO) must be assigned unique names.

Network connections (example)	• Network1: CPU (0) X5 port 1 + CPU (0) X5 port 2 • Network2: CPU (1) X5 port 1 + CPU (1) X5 port 2
Activation of type R1 system redundancy	• Via license key on the SEC of the CPU • Execution such as upgrading the System Expansion Card of a CPU 410-5H

4.10.4 Notes on connecting the IO device via media redundancy

Connection of the IO device with media redundancy

IO devices (1 interface module for each IO device) are connected to an IO controller in a ring topology. All nodes of the ring must support the "Media redundancy" function. The IO controller must be configured as an MRP manager.

To set up a ring topology with media redundancy, both free ends of a line network topology must be joined in the same device. Closing the linear bus topology to form a ring is achieved with two ports (ring ports) of a device in the ring.

Failure behavior for IO devices with media redundancy (Page 77)

Configuration

The following figure shows examples of the connection of IO devices on the PROFINET IO system:

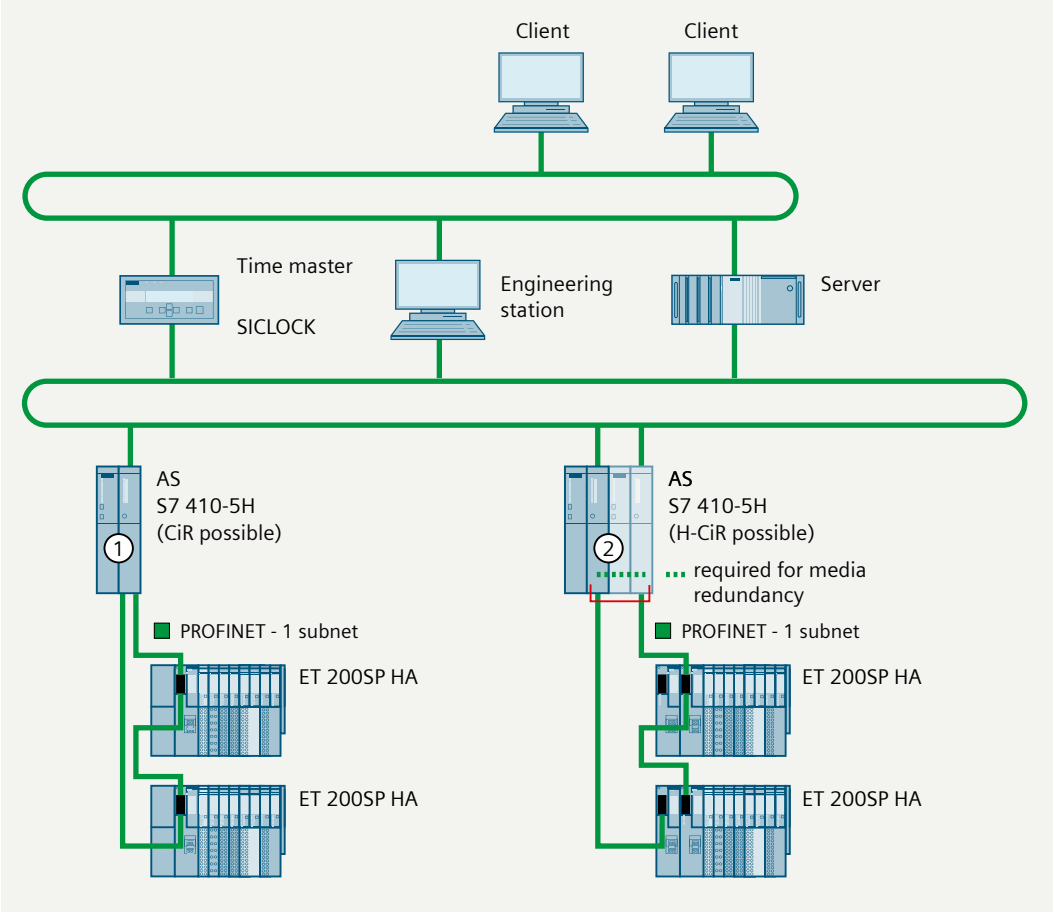

① Application planning of the IO device with media redundancy (1 subnet ring) (Page 77)

② Application planning of the IO device with media redundancy and system redundancy (1 subnet ring) (Page 77)

Maintenance and service

One of the following functions is possible in runtime:

- Connecting and removing IO devices
- Replacing PROFINET cables

4.10.5 Connection via media redundancy

4.10.5.1 Failure behavior for IO devices with media redundancy

Definition

At least one device of the resulting ring then takes over the role of the redundancy manager. All other devices in the ring are redundancy clients.

If the ring structure is interrupted, the following applies:

The IO devices continue to be available in the system.

4.10.5.2 Application planning of the IO device with media redundancy (1 subnet ring)

Definition

With media redundancy with 1 subnet ring, the hardware consists of a redundant IO device with 1 interface module.

Description

Observe the following rules for configuring the IO devices:

MRP must be enabled for ring configurations. All nodes of the ring are in an MRP domain.

Coupling	
Mounting rule	No special considerations
Subnet configuration	Each node is connected to two other nodes in a ring configuration.
Node name	The nodes on the fieldbus (PROFINET IO) must be assigned unique names.
Network connections (example)	Network1: CPU (0) X5 port 1 + CPU (0) X5 port 2
Structure of the IO devices	The IO devices must be configured in a ring structure.

4.10.5.3 Application planning of the IO device with media redundancy and system redundancy (1 subnet ring)

Definition

With media redundancy and system redundancy with 1 subnet ring, the hardware consists of a redundant IO device with 1 interface module.

Description

Observe the following rules for configuring the IO devices:

MRP must be enabled for ring configurations. All nodes of the ring are in an MRP domain.

Coupling	
Mounting rule	No special considerations
Subnet configuration	The PROFINET IO system begins and ends at an IO controller. Each node is connected to two other nodes in a ring configuration.
Node name	The nodes on the fieldbus (PROFINET IO) must be assigned unique names.
Network connections (example)	Network1: CPU (0) X5 port 1 + CPU (1) X5 port 1 Connection CPU (0) X5 port 2 with CPU (1) X5 port 2
Structure of the IO devices	The IO devices must be configured in a ring structure.

4.10.5.4 Redundancy manager

Definition

If there is a break in the network, the redundancy manager ensures that the data is redirected over an intact network connection.

Description

The CPU is preferably used as a redundancy manager.

4.10.6 Notes on connecting the IO device via IO redundancy

With IO redundancy, two input/output modules (module pair) of the same type are inserted next to each other on a special terminal block (redundant terminal block).

This terminal block connects the process signals of the two modules to a common process terminal.

Advantages of IO redundancy

The IO redundancy has several advantages.

- There is less wiring work compared to connecting separate I/O modules, because the interconnection of the process signals is integrated in the system.
- The redundant signal processing of the sensors and actuators at the module level increases the availability of the system.

If an I/O module or a channel of one of the two I/O modules fails, the entire system does not fail (valid for input/output and mixed modules).

Response to failure with IO redundancy (Page 80)

Configuration

An exemplary connection of the sensors or actuators, each with two redundantly used input/output modules, is configured as follows:

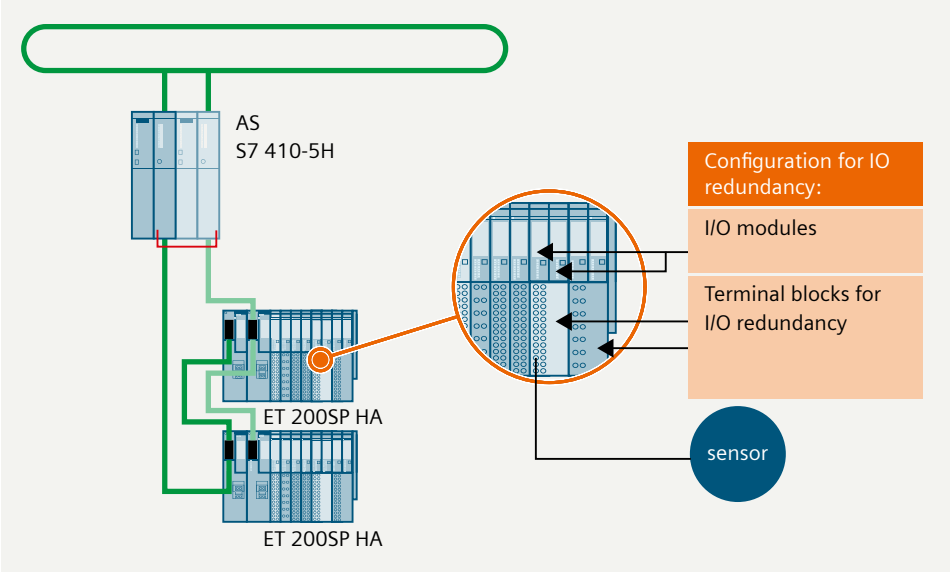

Application planning of the IO device with I/O redundancy (Page 80)

Maintenance and service

In the ongoing, error-free operation, one of the following functions is possible for one I/O module of a module pair:

- Firmware update
- Replacing a module

The other I/O module takes over the control of the outputs for this period of time.

NOTICE
I/O modules in the I/O redundancy mode for which at least one channel is configured with "Keep last value" When the CPU is in "STOP" mode or the PROFINET cable is pulled, the two modules must not fail one after the other. Carrying out the following actions one after the other for both modules is therefore not permitted: • Inserting and removing in I/O module • Firmware update for both I/O modules

If the I/O module is ready for the process again after performing the firmware update or after replacing the module, the CPU must first be switched to RUN and the PROFINET cable connected correctly, otherwise the "Keep last value" parameterization remains passive and the process continues to be controlled by the other I/O module alone.

If a firmware update or a replacement of the module takes place with this I/O module without taking the respective precautions on the other I/O module, this leads to a complete failure.

4.10.7 Connection via IO redundancy

4.10.7.1 Response to failure with IO redundancy

Definition

The following applies when a fault occurs in individual channels:

- Error-free inputs remain available in the system.
- Error-free outputs are still controlled in the system.

4.10.7.2 Application planning of the IO device with I/O redundancy

Definition

With IO redundancy, the hardware consists of a module pair (2 input/output modules) of the same type.

Description

Observe the following rules for installing I/O modules in IO redundancy:

Hardware rule	• The I/O modules must be approved for redundant operation. You can find this information in the manual for the respective module. • Redundantly deployed I/O modules must be identical, i.e. they must have the same article number, the same hardware release number and the same firmware version.
Mounting rule	I/O modules of the same type are plugged in pairs next to each other in the same IO device. In the case of IO redundancy, the following applies: • Both slots are located on the same support module. Carrier module (Page 26) • Both slots are located on the same terminal block. Terminal block (Page 27) **Note:** Be sure to check the documentation of the I/O module for a specific wiring.
Configuration	• Configure redundancy for the I/O module. • The settings you make for an I/O module always apply to the module pair.

4.11 Time synchronization and time stamping

4.11.1 Time synchronization options

Definition

The time synchronization is only relevant when using time stamping.

Description

The following options are available time synchronization of distributed I/O based on SIMATIC ET 200SP HA:

- Split plant bus (Page 82)
- Example configuration of time synchronization and time stamping with a single CPU (Page 84)
- Example configuration of time synchronization and time stamping with redundant CPU (Page 85)

4.11.2 Time synchronization of events

Definition

When a plant has multiple automation systems, the time stamps of events should be comparable.

The comparison of time stamps of events is based on the time synchronization of the associated automation systems.

4.11.3 Time-of-day synchronization options

4.11.3.1 Split plant bus

Definition

A network that is separate from the system bus for the time synchronization of the automation systems (referred to below as TIME-Net) increases the plant-wide time synchronization.

When using time stamping with an accuracy of 1 ms, the plant bus must be disconnected.

Description

- **Section of the system bus for synchronization of the AS with the central system clock**
  - This network only connects the time master and the AS to each other.
  - There is a direct connection between the central system clock and the first CPU (see figure below).
- **Section of the system bus for communication of the automation systems with other systems (e.g. engineering system; OS)**
  - This network is connected via a separate communication channel (e.g. CP 443-1).

The connection of an H system to the time master is structured as follows.
The two parts of the figure show the difference in the connection between the example configurations:

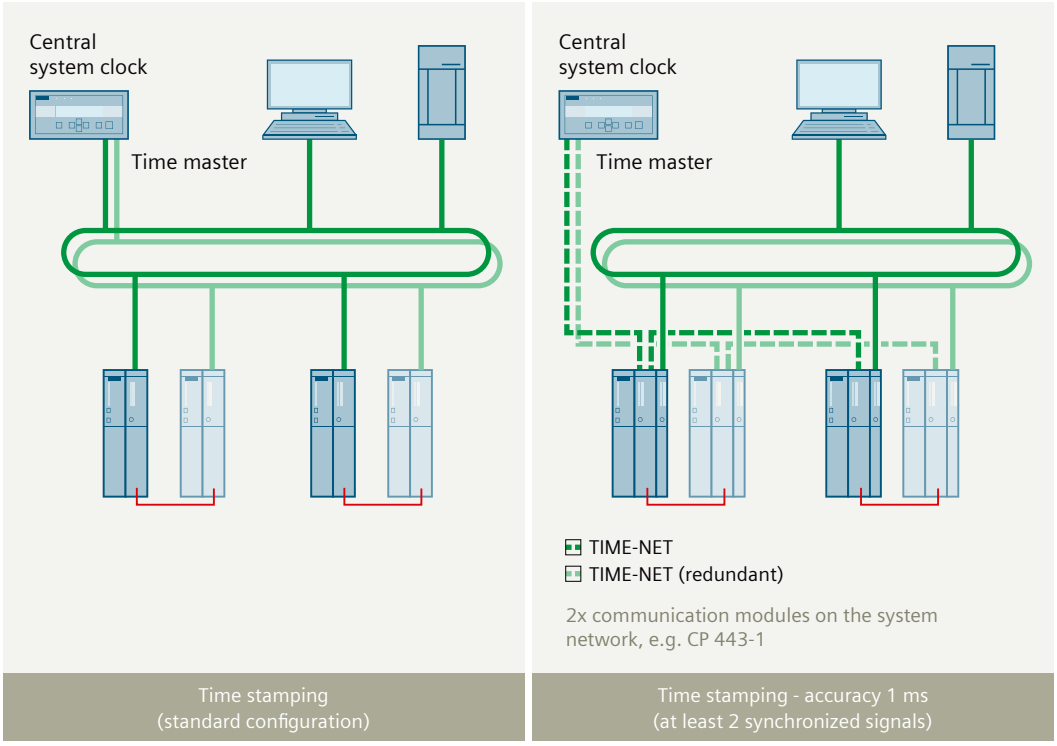

Time stamping
(standard configuration)

Time stamping - accuracy 1 ms
(at least 2 synchronized signals)

- A network (labeled "TIME-NET" here) only connects the central system clock to the first CPU configured for time stamping.
  This CPU sends time frames to other nodes in the TIME-NET.
- A central system clock approved for the automation system sends the time frames over Industrial Ethernet.
- There is a direct connection between the central system clock and the integrated PN-IO interface of the CPU.
- The time synchronization of the CPU is performed with the SIMATIC procedure.

4.11.3.2 Example configuration of time synchronization and time stamping with a single CPU

Example

The connection via redundant media (2 PROFINET IO systems) and the use of redundant interface modules is shown as follows:

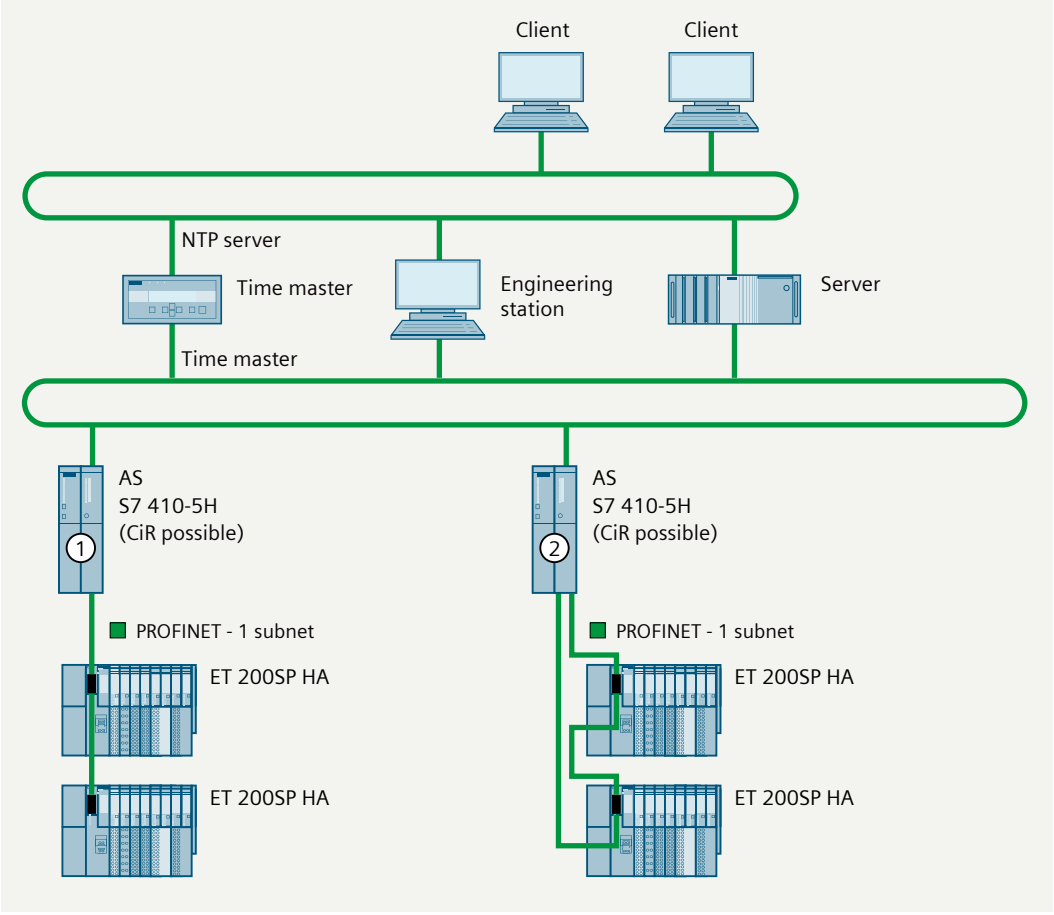

Time master	Central system clock with time-of-day synchronization
Automation system	CPU 410-5H in 1oo1 mode
Plant bus	1 PN/IO subnet on an internal PN/IO interface of the IO controller (e.g. CPU 410-5H: X5 connection)
Configurations ①②	**Note:** The configurations are not suitable for time stamping with an accuracy of 1 ms.
Fieldbus	1 PN/IO subnet on an internal PN/IO interface of the IO controller (e.g. CPU 410-5H: X8 connection)
Distributed I/O	IO devices based on ET 200SP HA with 1x IM in the 1oo1 mode

4.11.3.3 Example configuration of time synchronization and time stamping with redundant CPU

Example

The use of redundant I/O modules in an IO device is shown as follows:

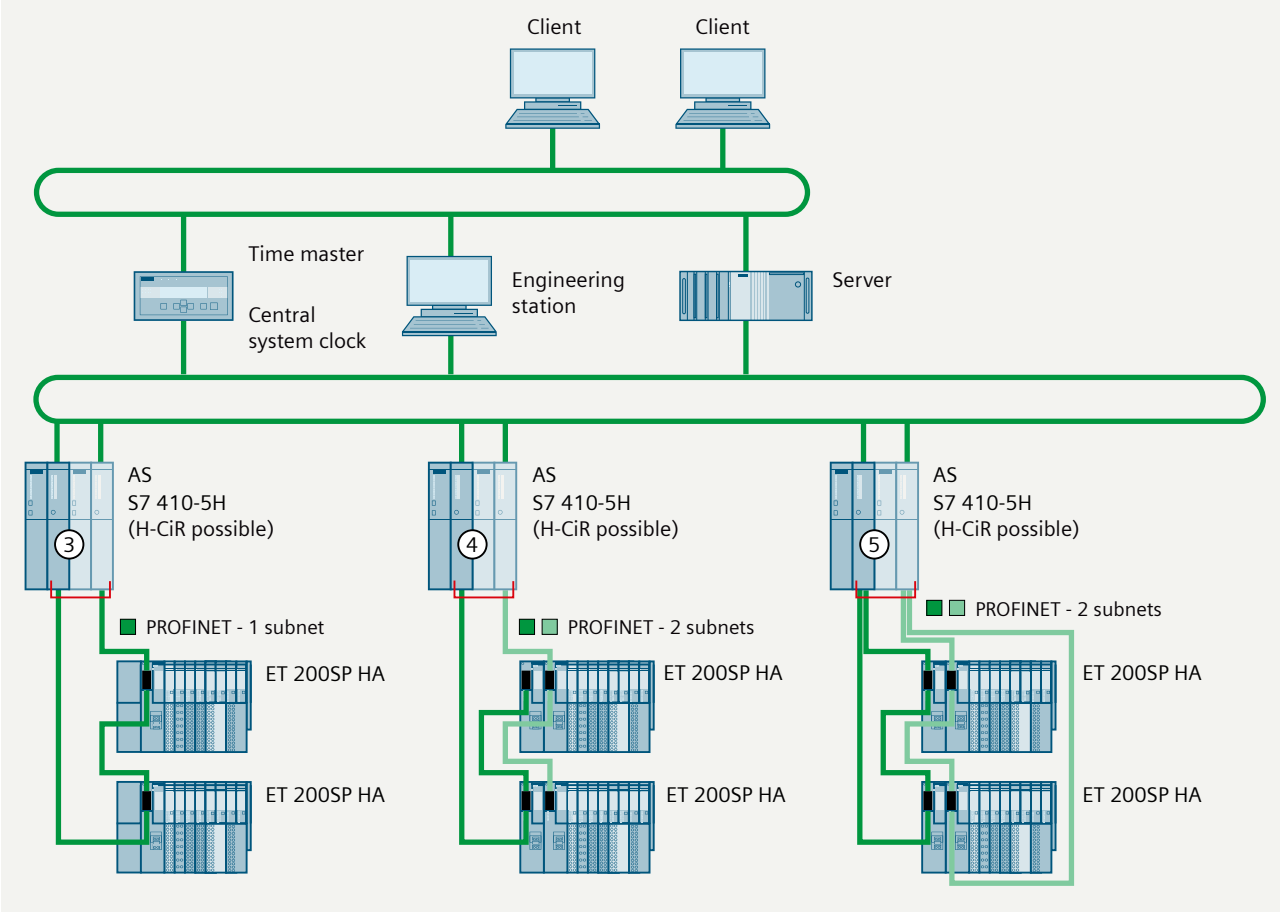

Time master	Central system clock with time-of-day synchronization
Automation system	IO controller in 1oo2 mode (2x CPU 410-5H)
Plant bus	1 PN/IO subnet on an internal PN/IO interface of the IO controller (e.g. CPU 410-5H: X5 connection)
Configurations ③④⑤	**Note:** The configurations are not suitable for time stamping with an accuracy of 1 ms.

Fieldbus	PN/IO subnet on the same internal PN/IO interface of the IO controller (e.g. CPU 410-5H: X8 connection) • ③: 1 PROFINET IO subnet with MRP • ④: 2 PROFINET IO subnets • ⑤: 2 PROFINET IO subnets with MRP
Distributed I/O	IO devices based on ET 200SP HA: • ③: With one interface module to a single IO controller • ④: With two interface modules to a redundant IO controller • ⑤: With two interface modules to a redundant IO controller

4.12 Slot rules

Follow the rules for plugging modules and using terminal blocks.

Sequence of slots for modules

Follow the sequence for plugging modules to ensure your system functions correctly (sequence from left to right).

1. Interface modules
2. ET 200SP HA - I/O modules, including fail-safe I/O modules (if present)

   Note

   If you plug an ET 200SP HA I/O module before an ET 200SP HA Ex power module, there must be an dummy module between the fail-safe I/O module and the Ex power module.

3. ET 200SP modules (if present)
4. All explosion-proof modules (if present)

   Note

   If you are using an ET 200SP module, there must be a dummy module between the last ET 200SP module and the Ex. power module.

Overview of types of terminal blocks

The following types of terminal blocks are available:

- Single
  - 22.5 mm wide (TB22)
    in the colors light gray, dark gray, black
    in the device versions 24 V and >24 V
  - 45 mm wide (TB45)
    in the colors light gray, dark gray
    in the device versions 24 V and >24 V
- Redundant
  - 45 mm wide (TB45R)
    in the colors light, dark, black
    in the device versions 24 V and >24 V

A detailed overview of the available terminal blocks and their compatibility can be found under Selection of the terminal blocks: (Page 54).

Rules for terminal blocks

- Potential group always starts with a light gray or black terminal block
- A dark gray terminal block may only follow a dark gray or light gray terminal block.
- A potential group may consist either exclusively of single terminal blocks or exclusively of redundant terminal blocks.
- Terminal blocks for 24 V and >24 V can be mixed in any way, if they are either all single terminal blocks or all redundant terminal blocks.

Prohibited combination

- A black terminal block must not be followed by a dark gray terminal block.
- No dark gray terminal block may follow directly after an interface module.
- Mixing of single and redundant terminal blocks in one potential group is not allowed.
- No fail-safe modules may be used when using terminal blocks for >24 V in a potential group.

Installation

5

5.1 Notes on installation

You can install the distributed I/O in a horizontal or vertical mounting position. The preferred mounting position is horizontal mounting to a vertical wall.

Mechanical and climatic environmental conditions (Page 183)

Information on the tightening torque is available for mounting components using screws.

Mounting rules (Page 238)

There is a maximum configuration length in the configuration of the plant.

Maximum mechanical configuration (Page 52)

Note that sufficient space must be provided for mounting and cooling of the modules.

Minimum clearances in the control cabinet (Page 90)

Mounting rail

The type-specific mounting rail is the mounting platform for the distributed I/O.

The associated versions and article numbers provide information on the specific properties of the mounting rail.

Accessories/spare parts (Page 225)

Mounting rails are available in multiple versions. The different dimensions and dimension drawings are relevant for mounting.

- Dimension drawings of the rails (Page 219)
- Dimensions for the drill hole (Page 91)

The mounting rail must be connected to the functional grounding during operation of the plant. Also note the additional information about electromagnetic compatibility.

- Electromagnetic compatibility (Page 178)
- Functional grounding (Page 92)

Carrier modules

The slots for the I/O modules are created by the connection of the carrier modules to the terminal blocks. You can find the combinations of terminal blocks and I/O modules in the section

Configurations of the slots of I/O modules (Page 54)

Terminal blocks

Terminal block for IO redundancy or potential distributor (Page 92)

The requirements of the plant were taken into consideration when selecting the terminal blocks.

Selection of the terminal blocks: (Page 54)

Mounting the distributed I/O

Overview of the mounting (Page 93)

5.2 Basics on mounting

5.2.1 Minimum clearances in the control cabinet

Definition

The mounting depth of the ET 200SP HA is 165 mm. It is the result of the interlocking components (mounting rail, carrier module, terminal block and I/O module). There should be at least 10 mm of space in front of the front panel of the modules.

Heat dissipation must be possible in this setup.

Description

Observe the minimum clearances of the IO device in the control panel or to surrounding components. Leave sufficient space for the wiring and the communication cable connection.

When using the ET 200SP HA up to a maximum ambient temperature of 60 °C, this distance can be reduced to 20 mm.

You must ensure the following clearances in millimeters when installing the mounting rail:

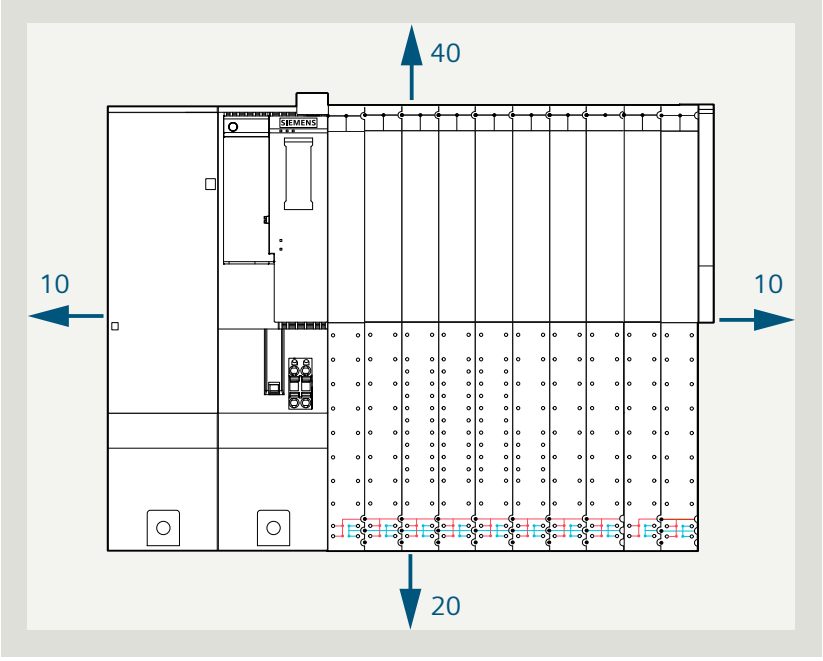

5.2.2 Dimensions for the drill hole

Definition

The dimensions for the drill holes depend on the versions of the mounting rail that can be supplied:

- **Rail 482.6 mm**
  This rail has two drill holes for fixing screws.
  A set of screws for grounding is provided.
- **Rail 1500 mm**
  This rail is intended for construction with special lengths and only has holes at the ends for fixing screws.
  The set of screws for grounding must be ordered separately if needed.

Description

The following dimensions are available for drill holes:

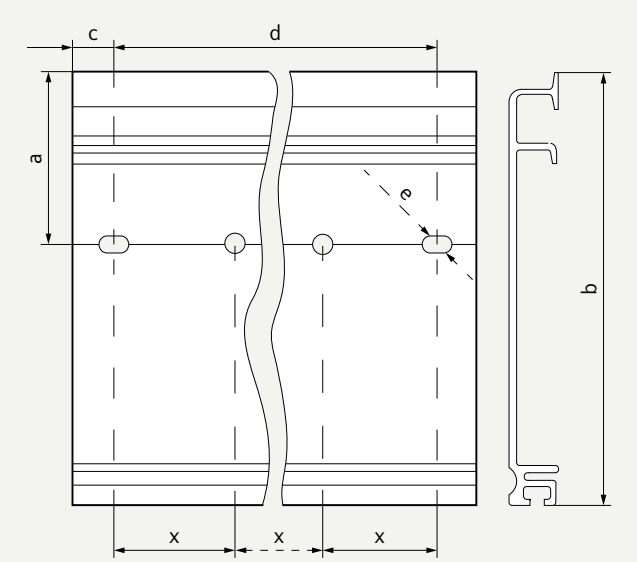

Drill holes / Length of the mounting rail	482.6 mm	1500 mm (> 530 mm)
a	65 mm	
b	162.7 mm	
c	8.3 mm	15 mm
d	466 mm	See x
e	10.2 mm	10.2 mm (for information on additional drill holes, see the following paragraph)
x	Not available	Recommended distance between 2 mounting points max. 500 mm

5.2.3 Functional grounding

Definition

For reasons of electromagnetic compatibility, you need to ensure that the mounting rail is conductively connected to functional grounding during operation of the plant.

The grounding of the mounting rail must meet the requirements for functional grounding:

- The installation location (e.g. enclosure, control cabinet) must have a protective conductor connection compliant with standards.
- The rail can also be connected to a protective conductor. This protective conductor is not absolutely required.

Description

Examples of functional grounding:

- Ground rail separately in the control cabinet
- Mount rail on grounded and galvanized mounting plates

5.2.4 Terminal block for IO redundancy or potential distributor

Definition

Terminal blocks for IO redundancy or potential distributor are terminal blocks with a width of 45 mm. You can mount the 45 mm wide terminal blocks on 8x and 2x carrier modules. The slots for modules in IO redundancy are located on the same terminal block.

Description

Mounting the 45 mm wide terminal blocks on 8x and 2x carrier modules is shown in the following figure:

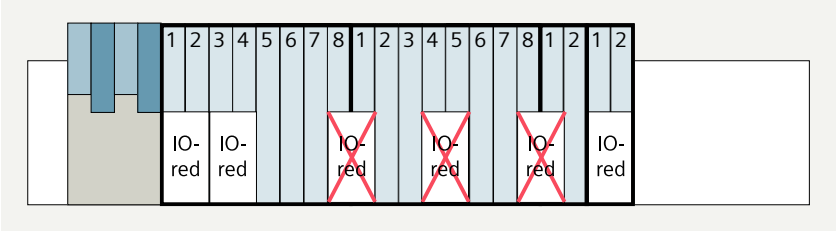

permissible	The 45 mm wide terminal blocks must be plugged into the slots of the carrier module beginning with odd slot numbers.
not permissible	The 45 mm wide terminal blocks may not be plugged more than two adjacent carrier modules away.

The I/O modules of the same type must be placed in pairs, side-by-side in the same distributed I/O.

5.3 Overview of the mounting

The procedure described below explains to you how to mount the distributed I/O.

Requirement

- The supply voltage is switched off.
- You are familiar with the basics of mounting the distributed I/O.
  Notes on installation (Page 89)

⚠ CAUTION
Restrictions for vertical installation
With vertical installation, the maximum permissible ambient temperature is 10 °C lower.

Procedure

The following figure shows the procedure. The order used here is required for mounting a distributed I/O.

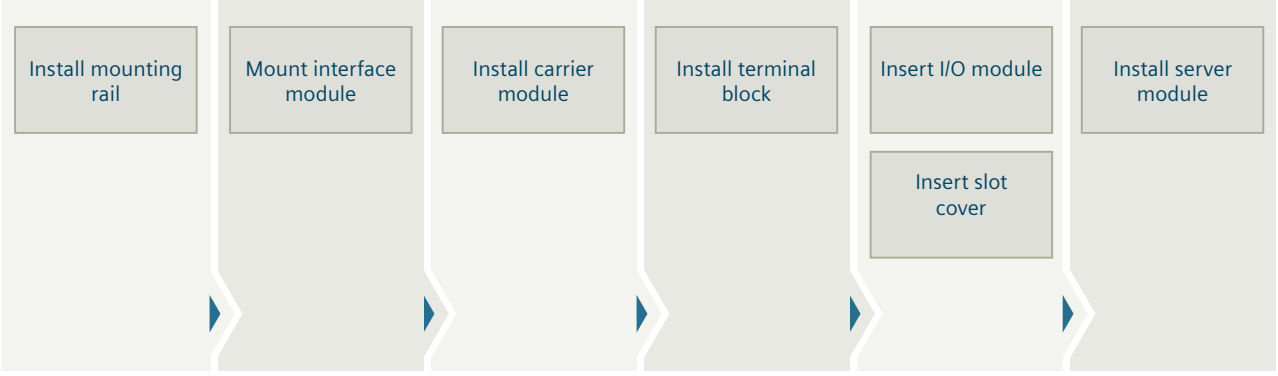

Installing the rail

When mounting the distributed I/O, you start with the rail.

Note

Fastening for vibration and shock loads

If the distributed I/O system is subject to vibration and shock, you must mount a mechanical fastening on the mounting rail on both sides of the station (e.g. ground terminal 8WA1010-1PH01). This measure prevents lateral slipping of the components.

Applications

Preparing a rail for installation (Page 96)

Installing the rail (Page 97)

Installing the functional grounding (Page 98)

Installing the interface module

The configuration starts on the left with the carrier module for the interface module and the interface module.

Note

Scope of delivery (server module and power bus cover)

A server module and a power bus cover are supplied for the interface module with every carrier module.

Applications

Installing the carrier module for the interface module (Page 99)

Mounting the interface module (Page 100)

Installing the carrier module

The carrier modules for configuring 2 or 8 slots for the I/O modules then follows on the right next to the carrier module for the interface module.

Note

8x carrier module without power bus

When using the carrier module 8x without power bus, the following applies:

- Only light gray or black terminal blocks are permitted to be installed on the carrier module without a power bus.
- An extension of the potential group is not possible.
- The power bus cover cannot be installed.

Application

Mounting an carrier module for I/O module slots (Page 101)

Installing the terminal block

The terminal blocks can be plugged into the mounted carrier modules.

- A light gray terminal block (supply voltage for the potential group) is plugged after the interface module or at the beginning of each potential group. Alternatively, a black terminal block can be inserted.
  - The power bus is interrupted to the left.
- The dark gray terminal blocks then follow.
  - The supply voltage connected to the light gray terminal block is supplied to the I/O modules.
  - The voltage is supplied to the dark gray terminal block positioned to the right of it.
  - The power bus is continuous.

Note

Usage of the 8x carrier module without power bus

The formation of potential groups is not possible with the 8x carrier module without a power bus.

Application

Installing the terminal block (Page 104)

Inserting an I/O module or slot cover

You insert I/O modules into the slots that were created by connecting the terminal block and the carrier module.

When a slot is not equipped with an I/O module, insert a slot cover into the slot.

Applications

Inserting an I/O module (Page 105)

Inserting a TM cover (Page 106)

Installing the server module

You complete the configuration of the IO device by installing the server module and power bus cover.

Application

Installing the server module and power bus cover (Page 107)

Installing the marking options

Install the marking accessories to mark the various components.

Applications

Applying color-coded labels (Page 109)

Applying labeling strips (Page 109)
Applying reference identification labels (Page 110)

5.4 Installation

5.4.1 Preparing a rail for installation

Requirement

- The dimensions for the drill holes are defined.
- Burrs or splinters have been removed from the mounting rail.

Tools required

- Suitable tools for shortening the mounting rail (e.g. hacksaw)
- Drill ∅ 6.5 mm

Procedure

1. Cut the 1500 mm mounting rail to the required length.
2. Mark the holes.

Note

To ensure secure installation of the modules, make sure you position the drill holes centered on the identification groove and only use screws of the maximum size.

3. Drill holes after the beginning and before the end of the mounting rail fixing points (15 mm distance).
4. Recommendation for fastening mounting rails > 530 mm:
   Determine additional drill holes between the first and last fixing points (maximum distance 500 mm).

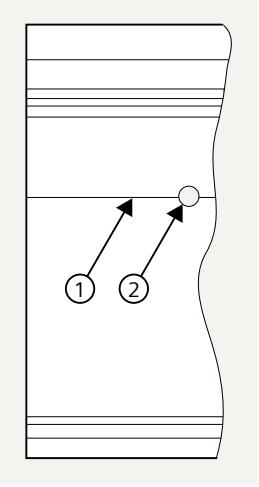

① Identification groove for additional drill holes
② Additional drill hole

Result

The mounting rail has the correct length and includes drill holes for mounting.

5.4.2 Installing the rail

Requirement

- The mounting rail includes the matching bore holes and has the correct length.
- Minimum clearances in the control cabinet are defined.

Tools required

- Tool suitable for the selected fastening type (e.g. screwdriver)
- Screws matching your configuration
  - Cylinder head screw M6 to ISO 1207/ISO 1580 (DIN 84/DIN 85) for the external fixing screws
  - Washers for cylinder head screws with an internal diameter of 6.4 mm and an external diameter of 11 mm in accordance with ISO 7092 (DIN 433).
  - Hexagon bolt M6 to ISO 4017 (DIN 4017) for additional fixing screws (for mounting rails > 482.6 mm)

Procedure

1. Install the rail to allow enough space for mounting and cooling the modules.
2. Screw the rail onto the mounting surface.

Result

The mounting rail is installed and fastened to the mounting surface with screws.

5.4.3 Installing the functional grounding

Requirement

- The mounting rail is installed and fastened to the mounting surface with screws.
- You are familiar with the basics of functional grounding.

Tools required

- Tool suitable for the selected fastening type (e.g. screwdriver)
- Screws matching your configuration
  - Cylinder head screw M6 to ISO 1207/ISO 1580 (DIN 84/DIN 85) for the external fixing screws
  - Washers for cylinder head screws with an internal diameter of 6.4 mm and an external diameter of 11 mm in accordance with ISO 7092 (DIN 433)
  - Hexagon bolt M6 to ISO 4017 (DIN 4017) for additional fixing screws (for mounting rails > 482.6 mm)
- Wrench or socket wrench, size 10, for connecting the ground cable and possibly a tool for connecting the functional grounding
- Stripping tool and crimp tool for the grounding cable

Procedure

1. Isolate the grounding cable with a minimum cross-section of 10 mm^2.
2. Attach a ring cable lug for M6 screws with the crimp tool.
3. Slide the enclosed bolt into the T profile groove.

4. Insert the spacer, ring cable lug with the grounding connector, flat washer, and lock washer onto the bolt (in that order). Fasten the components with the nut.

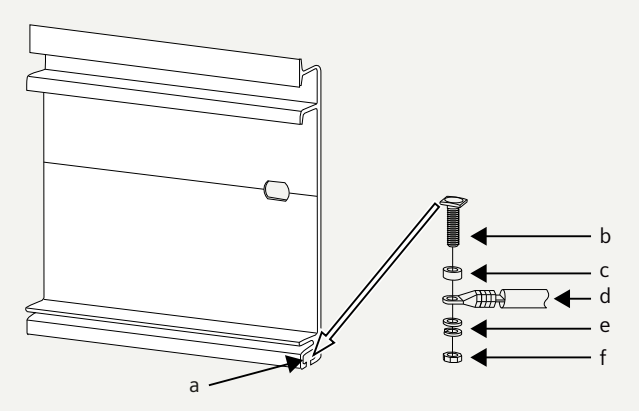

a T profile groove
b Bolt
c Spacer
d Ring cable lug with the ground cable
e Washer and spring washer
f M6 hexagon nut

5. Connect the other end of the grounding cable to the functional grounding.

Note

Alternative grounding of the rail

If it is ensured that the rail is permanently connected to functional grounding by means of an equivalent, standard-compliant installation, for example, with a permanent attachment to a grounded enclosure wall, grounding via the ground screw can be omitted.

Result

The mounting rail is connected to the functional grounding.

5.4.4 Installing the carrier module for the interface module

Requirement

The mounting rail is installed and connected to the functional grounding.

Procedure

1. Hang the carrier module (for assembling the interface module) on the mounting rail.

   Note

   Take into consideration the required version of the carrier module (redundant configuration/ non-redundant configuration).
   There is a distance between IM (removable "module") and the carrier module.

2. Swivel the carrier module backwards until you hear the carrier module click into place on the mounting rail.

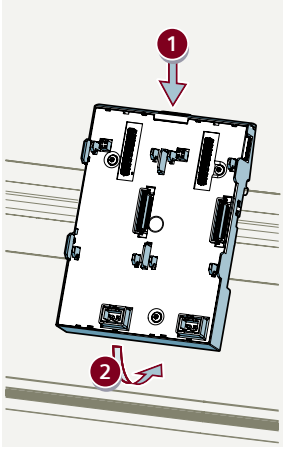

Result

The carrier module for the interface module is mounted onto the mounting rail.

5.4.5 Mounting the interface module

Requirement

- The mounting rail is installed and connected to the functional grounding.
- The carrier module for the interface module is mounted onto the mounting rail.
- The corresponding connector for the supply voltage is not plugged in.

Procedure

Set the interface module parallel onto the carrier module until you hear the module latch click into place.

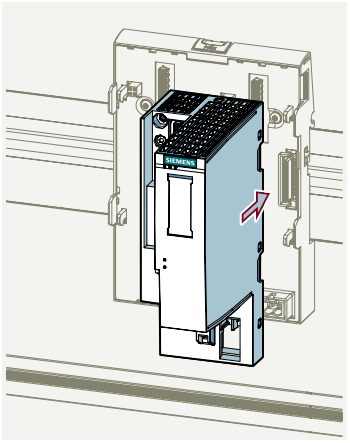

Result

The interface module is mounted onto the carrier module of the interface module.

5.4.6 Mounting an carrier module for I/O module slots

Requirement

- The mounting rail is installed and connected to the functional grounding.
- The carrier module for the interface module and the interface module are installed.

Tools required

Screwdriver 4.5 mm or TORX T15 (recommended): For fastening the fixing screws on the carrier module to the rail

Procedure

Note

Recommendation

Install all carrier modules one after the other before you begin installing the terminal blocks.

1. Remove the transport locks at the fixing screws of the carrier modules.



2. Tighten the fixing screws on the carrier modules.
3. Hang the carrier module (for setting up the modular slots) on the mounting rail (① see figure in Step 4).
4. Swivel the carrier module backwards onto the mounting rail ②.

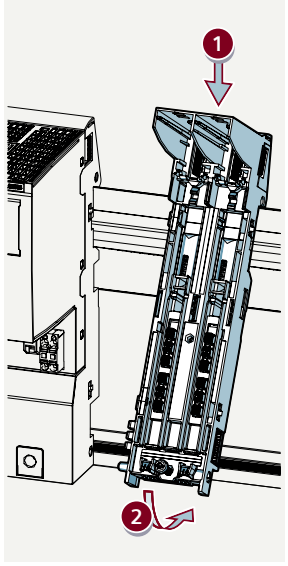

5. Ensure that the interlocks ③ of the carrier module have been removed.

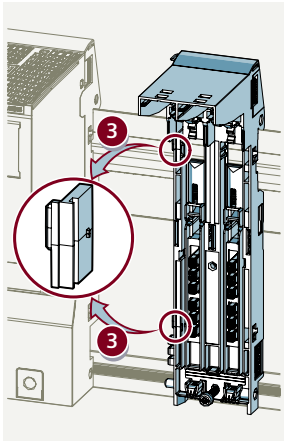

6. Push the carrier module sideways to the left until it meets the previous component (carrier module of the interface module or carrier module for I/O modules) ④.

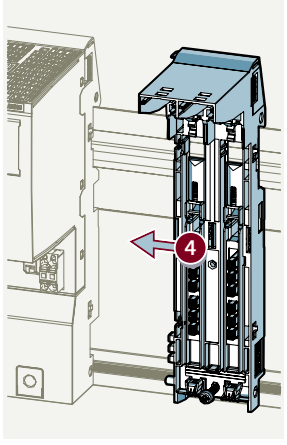

Figure 5-1 Moving the carrier module

7. Ensure that the transport lock under the fixing screws is removed.

8. Press the interlocks (⑥ see figure in Step 9) of the carrier module into the carrier module.

Note

Recommendation

Avoid angle errors during installation. Before tightening the fixing screw, you should latch several carrier modules onto the mounting rail and connect them to one another with the interlocks.
In this way, the carrier modules automatically align themselves parallel to the rail.

9. Fasten the fixing screws securely onto the rail on the carrier module ⑦.

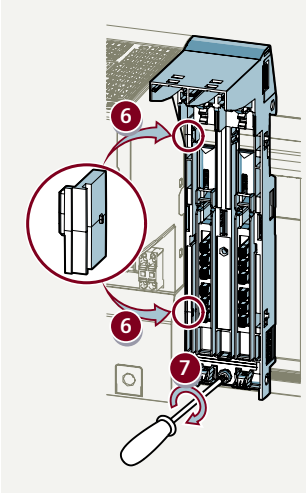

Note

When the screws are tightened, the position of the carrier module to the rail is fixed and cannot be changed by latching of the next carrier module.

Result

The carrier module for the I/O slots is mounted onto the mounting rail.

5.4.7 Installing the terminal block

Requirement

- The carrier module for the I/O modules is mounted.
- The requirements of the plant were taken into consideration when selecting the terminal blocks.
- Terminal blocks must be completely installed on an carrier module.

Procedure

Note

Installing terminal blocks for individual I/O modules and for IO redundancy in an IO device

Only terminal blocks for individual I/O modules or for IO redundancy may be plugged into a potential group.

1. Slide the terminal block diagonally into the holder of the carrier module.
2. Swivel the terminal block downwards until the fastening elements on the carrier module click into place.

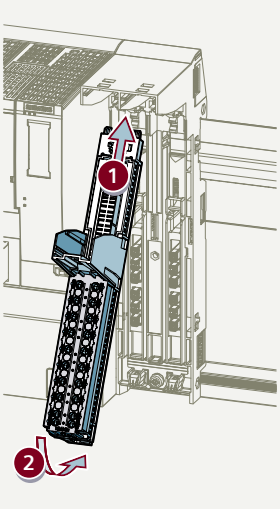

Result

The terminal blocks are mounted.

5.4.8 Inserting an I/O module

Requirement

The corresponding terminal block is installed.

Procedure

Insert the I/O module parallel into the slot until you hear both interlocks latch into place.

Note

Avoid inserting an I/O module at an angle.

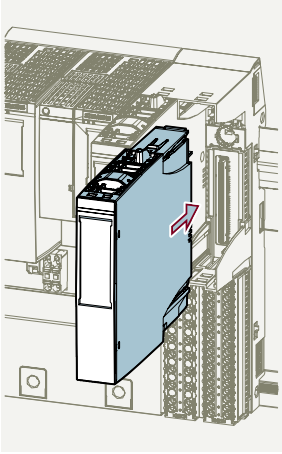

Result

The I/O module is inserted.

5.4.9 Inserting a TM cover

Requirement

A terminal block is installed.

Description

Insert the TM cover parallel into the slot until you hear both interlocks latch into place.

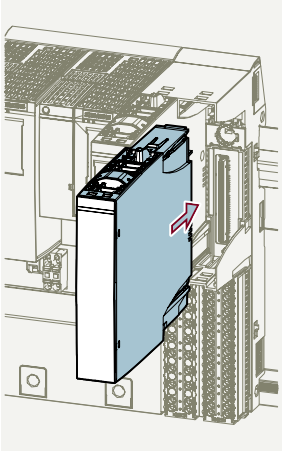

Result

The slot cover is inserted.

5.4.10 Installing the server module and power bus cover

Requirement

The carrier modules are mounted.

Procedure

1. Hang the server module in the rail to the right of the last carrier module.
2. Swivel the server module downwards until the fastening elements click into place on the rail.

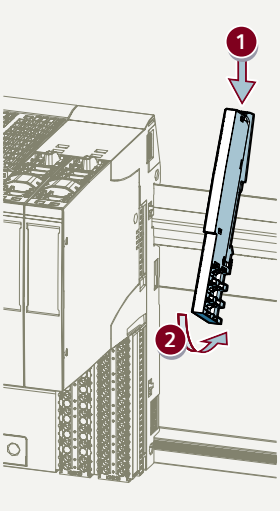

3. Move the server module sideways to the left until it audibly latches onto the last carrier module.

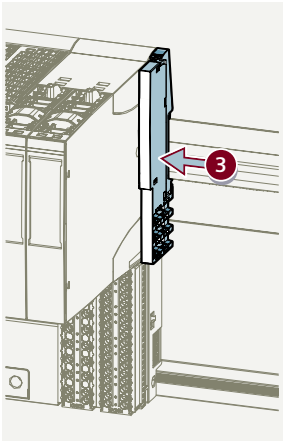

4. Press the power bus cover into the last carrier module.

Note

When the last carrier module is a carrier module without a power bus, the power bus cover cannot be inserted.

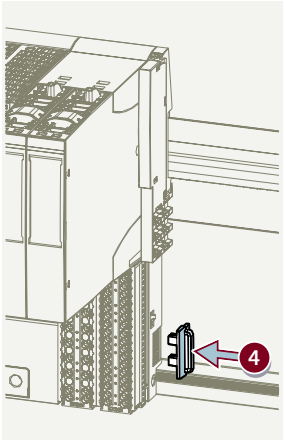

Result

The server module and the power bus cover are installed.

5.4.11 Marking options of IO device components

5.4.11.1 Applying color-coded labels

Requirement

The terminal blocks are not wired.

Procedure

Press the color-coded labels into the terminal box of the terminal block.

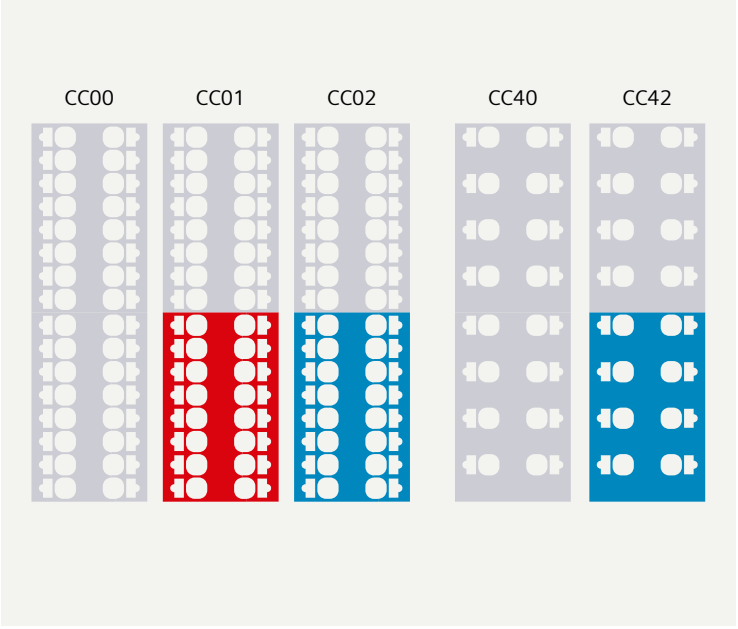

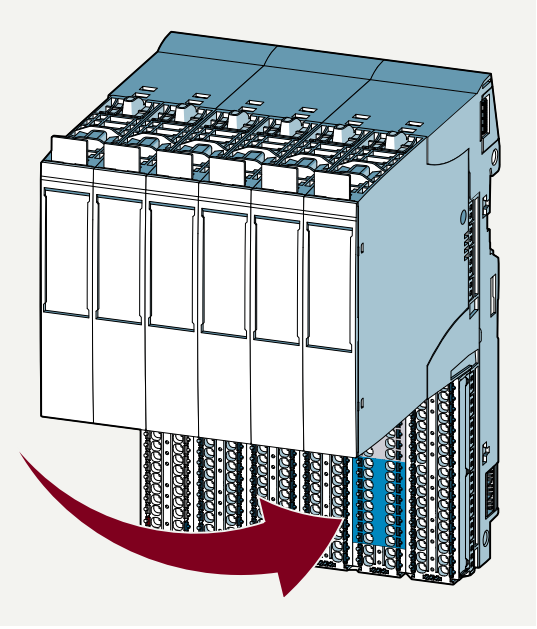

Result

The color-coded labels are mounted.

5.4.11.2 Applying labeling strips

Requirement

The strips are labeled.

Procedure

Insert the labeling strip into the interface module or I/O module.

Result

The labeling strips are mounted.

5.4.11.3 Applying reference identification labels

Requirement

The reference identification labels have been removed from the sheet.

Procedure

Insert the reference identification labels into the insert opening on the top of the modules:

- Interface module
- BusAdapter
- I/O module
- Slot cover

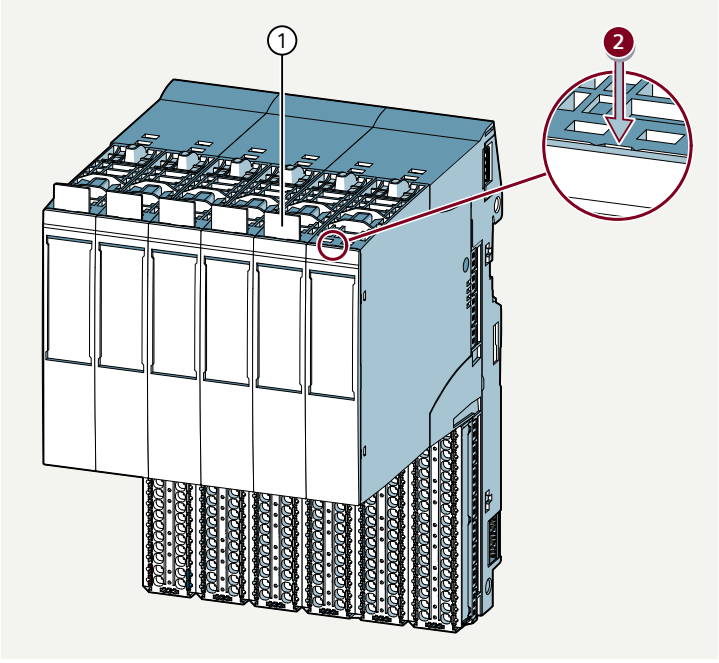

① Reference identification labels
② Opening for label

Result

The reference identification labels are attached.

Wiring

6

6.1 Notes on operation

The integration of an IO device in a plant or system demands that specific rules and regulations are observed, depending on the area of application.

This section provides an overview of the most important rules that must be observed during integration of an IO device.

Specific application

Keep to the safety and accident prevention regulations applying to specific applications, for example, machine protection guidelines.

EMERGENCY STOP devices

EMERGENCY STOP devices in accordance with EN / IEC 60204 must remain effective in all operating modes of the plant or system.

Excluding hazardous plant states

You need to implement suitable measures to ensure that dangerous operating conditions are excluded, also in the following situations:

- When the system restarts after a voltage dip or power failure.
- Bus communication starts automatically after a fault.

If necessary, EMERGENCY STOP must be forced!

An uncontrolled or undefined startup must not occur after the EMERGENCY STOP is unlocked.

Supply voltage

Observe the following for the supply voltage:

- Typical functional extra low voltage U_{rated} = 24 V DC +-20% (⎓)
  Ensure that there is a safe (electrical) separation of low voltage (SELV/PELV).
  The following standard must be complied with: EN / IEC / UL61010-2-201
- For buildings: In the event of danger through overload, you must provide lightning protection measures for external lightning protection (e.g. lightning protection elements).

- For the cables of the supply voltage (24 V DC) and the signals:
  If there is danger of overvoltage, you must implement lightning protection measures for internal lightning protection (for example, lightning protection elements).
  Accessories/spare parts (Page 225)
- IO device in PROFINET networks:
  In LAN(s) you may only operate IO devices with PROFINET IO interfaces in LANs when the following condition is met:
  All connected modes are operated with power supplies (e.g. power pack, battery) of the type SELV/PELV with guaranteed electrically isolated extra-low voltage.

Line voltage

Observe the following for line voltage:

- For stationary plants or systems without an all-pole mains circuit breaker, there must be a circuit breaker mechanism (all-pole) fitted in the building installation.
- For the power supply, the configured rated voltage range must correspond to the local line voltage.
- The fluctuation/deviation of the line voltage from the rated value must be within the permitted tolerance for all power circuits of the IO device.

Information on insulation, protection class, degree of protection and rated voltage (Page 185)

Protection against outside electrical influences

Observe the following for protection against electrical effects or faults:

- In plants with distributed I/O, ensure that the system is connected to a protective conductor with sufficient cross-section for discharge of electromagnetic interference.
- For signal and bus lines, you must ensure that a wire/cable breakage or a cross-circuit does not lead to undefined states of the plant or system.

Reference

For additional information, see the Function Manual.

Designing interference-free controllers (https://support.industry.siemens.com/cs/ww/en/view/59193566)

6.2 Notes on wiring

Cable cross-sections and wire end ferrules

The cable cross-sections depend on your respective use.

Cable cross-sections and ferrules (Page 239)

TWIN wire end ferrules for wires of the push-in terminals

Due to the space required by TWIN wire end ferrules with 0.75 mm^2 cross-section, you must ensure a correct angle for the conductor arrangement when crimping the TWIN wire end ferrule so that the wires are optimally arranged.

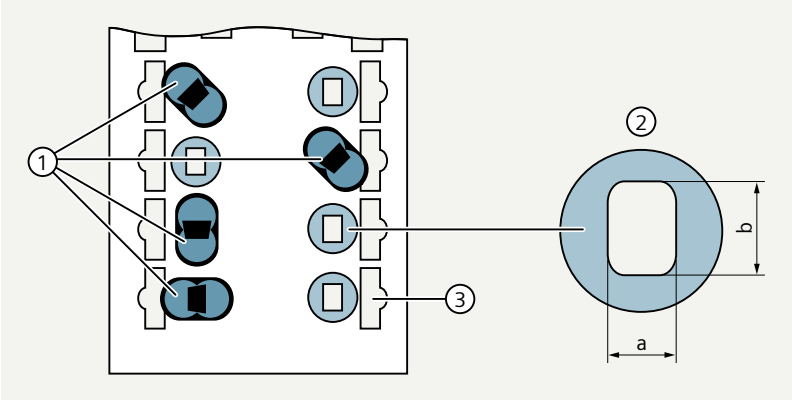

① Crimp TWIN wire end ferrules at the correct angle
② Cross-section of the terminal compartment
- a: 1.8 mm
- b: 2.4 mm

③ Spring opener

Mechanical and climatic environmental conditions (Page 183)

6.3 Notes on wiring of the terminal block

The following terminals are located on the terminal blocks:

- Terminals for the supply voltage
  - Only connect the supply voltage to light gray and black terminal blocks.
- Process terminals
  - The signal lines of sensors and actuators must be connected to the process terminals on the terminal block.

Connection on the slot and I/O module (Page 114)

Supply voltage (Page 117)

Power supply

Read the technical specifications and information on supply voltage in section "Notes on operation (Page 111)".

Assignment of the terminals on the terminal block

You can find information on the terminal blocks and I/O modules in the corresponding manuals.

Note

Specific designations of the process terminals in the wiring and block diagrams of the I/O modules / terminal blocks

- **RES**: Reserved, these process terminals must be left unconnected for future expansions
- **n.c.**: Not connected, these process terminals have no function. However, they can be connected to potentials specifically defined for a module, for example, for the laying unused wires.

Assignment of the terminals on the terminal block (Page 116)

Circuit diagrams for the supply voltage (Page 118)

Applications

Depending on the type of cable, there are different ways for wiring the terminal blocks:

- Connecting solid cables without ferrule (Page 229)
- Connecting stranded cables with ferrule or ultrasonic compression (Page 229)
- Connecting stranded cables without ferrule (Page 230)

6.4 Supply of the terminal block

6.4.1 Connection on the slot and I/O module

Definition

The connections on the slot and I/O module connect the respective modules to each other.

Connections on the terminal block differ depending on the I/O module.

More information on the pin assignment of the I/O module (terminal block) is provided in the documentation of the I/O module.

Description

The connections on the terminal block and the I/O module are shown as follows:

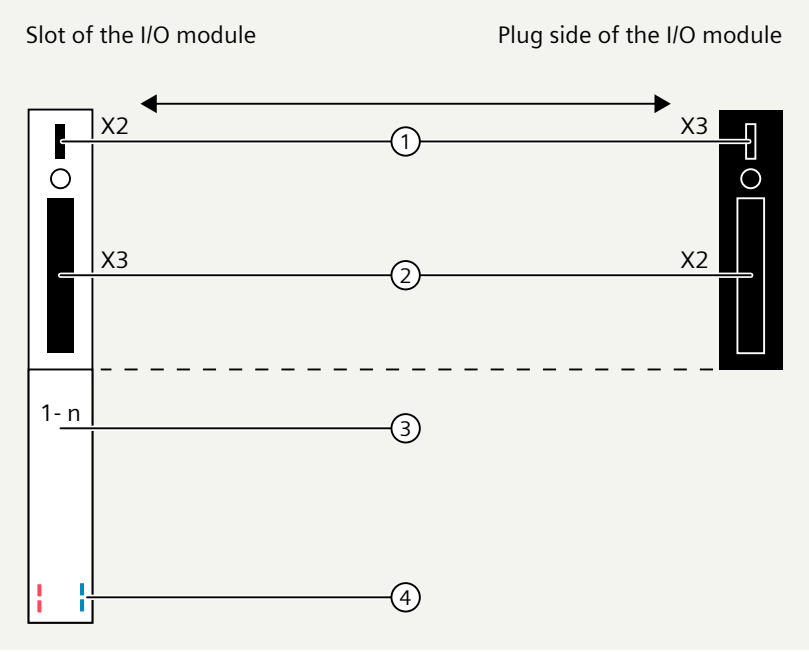

① Carrier module contacts of the backplane bus (max. 50 mA; max. 3.5 V DC ⎓)

② For the terminal block contacts of the I/O module (for maximum voltages and currents, refer to the documentation of the respective I/O module)

③ Process terminals on the terminal block (number, maximum/permissible voltages and currents, refer to the documentation of the respective I/O module.)

④ Supply voltage of the I/O module

6.4.2 Assignment of the terminals on the terminal block

Assignment of the terminals on the terminal block

The allocation of the process terminals for the terminal blocks depends on the inserted I/O module.

CAUTION

Different assignment of the terminals for the supply voltage

- The terminals at which L+ supply voltage is applied are separated in the following terminal blocks:
  - Type M1
  - Type L0
  - Type F1
- The terminals at which L+ supply voltage is applied are connected in the following terminal blocks:
  - Type H1
  - Type P0
  - Type N0
  - Type K0

Description

The terminal block is assigned as follows:

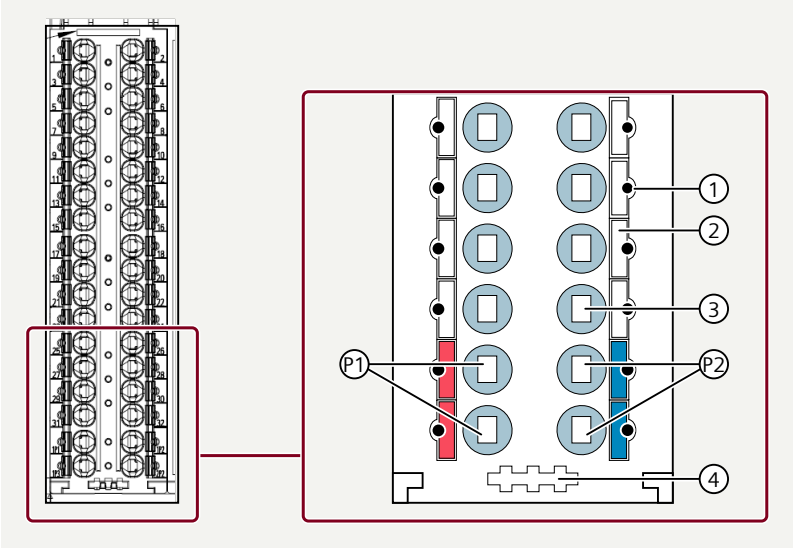

① Measuring tap
(suitable probes: Diameter 1.0 mm, cone height max 1.15 mm; length ≥ 10 mm in compliance with the approved voltage category)

② Spring release

③ Push-in terminal

④ Holder for shield contact

P1 Supply voltage L+: The terminal assignment depends on the type of terminal block (see tables in the following section "Supply voltage")

P2 Supply voltage M

6.4.3 Supply voltage

Definition

The supply voltage is used to operate the distributed I/O.

Connect the supply voltage to a light gray or black terminal block.

Description

The following two tables show the terminal blocks to which you need to connect the cables of the supply voltage.

The following connection terminals are available for the supply voltage on the terminal block Types H1; K0; N0; P0:

Potential	Terminals on the terminal block	Labeling of the terminal	Voltage on the power bus
• Ground	• 1P2 and 2P2	Blue	• P2
• L+	• 1P1 and 2P1 **Note: Terminals connected**	Red	• P1

The following connection terminals are available for the supply voltage on the terminal block types M1; L0; F1:

Potential	Terminals on the terminal block	Labeling of the terminal	Voltage on the power bus
• Ground	• 1P2 and 2P2	Blue	• P2
• 1L+ • 2L+	• 1P1 • 1P3 **Note: Terminals not connected**	Red	• P1 • P3

The following connection terminals are available for the supply voltage on the terminal block type H0:

Potential	Terminals on the terminal block	Labeling of the terminal	Voltage on the power bus
• Ground	• M	• No color marking	• No power bus connection
• L+	• L+	• No color marking	• No power bus connection

6.4.4 Circuit diagrams for the supply voltage

Definition

The circuit diagrams for the supply voltage are the graphical representation of the distribution of the supply voltage over the power bus.

Description

The wiring diagrams of the connection terminals for the supply voltage and the distribution over the power bus are displayed as follows:

Terminal block infeed:	Type and number of process terminals	Circuit diagram for supply voltage
New potential group (light gray terminal block)	• Type H1 (32) • Type K0 (16) • Type P0 (64) • Type N0 (64)	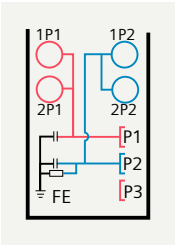
	• Type M1 (32) • Type L0 (16)	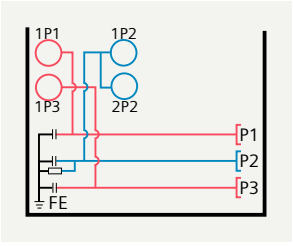
Potential group of the left module (dark gray terminal block)	• Type H1 (32) • Type K0 (16) • Type P0 (64) • Type N0 (64)	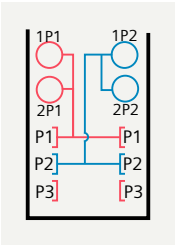
	• Type M1 (32)	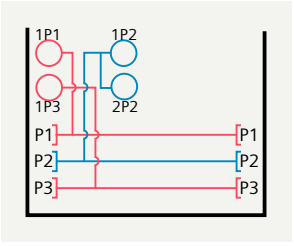

Terminal block infeed:	Type and number of process terminals	Circuit diagram for supply voltage
No potential group (black terminal block)	• Type H0 (D-SUB, 32) • Type S0 (D-SUB, 16)	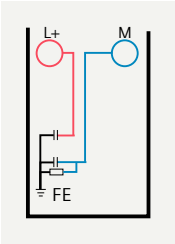
	• Type F1 (32)	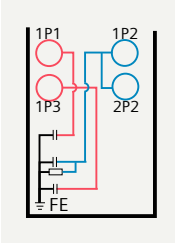
	• Type F0 (D-SUB, 32) • Type R0 (D-SUB, 16) • Type M0 (D-SUB, 32)	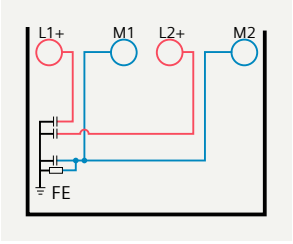

Each dark gray terminal block uses the terminals (red/blue) to access the supply voltage of the terminal block mounted on the left (light gray or dark gray).

6.5 Connecting the power supply to the interface module

Requirement

- The supply voltage is switched off.
- The respective conductor is connected.

Procedure

Push the wired connector plug into the socket in the interface module.

Result

The supply voltage is connected to the interface module.

6.6 Notes on the interface connection for communication

Installing a PROFINET cable on the BusAdapter

Depending on the configuration of the PROFINET IO system, you select electrical or optical PROFINET IO cables for the connection of the distributed I/O.

- Electrical PROFINET IO cables:
  - PROFINET cable with RJ45 connector (8-wire cable)
  - Connect a FastConnect cable directly to the BusAdapter
- Optical PROFINET IO cables:
  - Fiber-optic cable with LC connector

The type of connecting cable determines the BusAdapter required for connecting the distributed I/O.

Note

Strain relief of the bus cables

Make sure to secure the bus cables by installing an appropriate strain relief. Refer to the installation guidelines of the manufacturer.

PROFINET IO loop-through

Two port switches are integrated into all BusAdapters of the ET 200SP HA. These switches allow you to loop-through the PROFINET IO system from one station to the next.

PROFINET IO loop-through

Two port switches are integrated into all BusAdapters of the ET 200SP HA. These switches allow you to loop-through the PROFINET IO system from one station to the next.

Number of media interfaces

Due to differences in runtime, avoid a network structure in which there are more than four interfaces between electrical and optical media in a PROFINET IO system between the CPU and any IO device.

Example of a recommended PROFINET IO system setup (Page 126)

Example of a PROFINET IO system setup that is not recommended (Page 126)

Power supply

Read the technical specifications and information on supply voltage in section "Notes on operation (Page 111)".

Configuration guidelines for IO device with PROFINET IO interfaces

In LANs you may only operate IO devices with PROFINET IO interfaces in LANs when the following condition is met:

All connected nodes are operated with power supplies (e.g. power supply unit, battery) of SELV/PELV type with guaranteed electrically isolated extra-low voltage.

A data transfer point is prescribed for connection to the WAN (Wide Area Network) that guarantees this degree of safety.

Applications

- Connecting the PROFINET cable to the BusAdapter (Page 122)
- Connecting the BusAdapter (Page 122)

6.7 Connecting the communication interfaces

6.7.1 Connecting the PROFINET cable to the BusAdapter

Requirement

Observe the notes in the following documentation:

SIMATIC NET: Industrial Ethernet / PROFINET Passive network components (https://support.industry.siemens.com/cs/ww/en/view/84922825)

Procedure

Connect the PROFINET cable to the BusAdapter.

Result

The PROFINET cable is connected to the BusAdapter.

6.7.2 Connecting the BusAdapter

Requirement

The PROFINET connection cables are connected to the BusAdapter (e.g. BusAdapter with FastConnect cable) or can be retrofitted (e.g. BusAdapter for RJ45 connectors or LC connectors).

Tools required

Screwdriver 3.5 mm or TORX T10 (recommended):

Procedure

Note

The following illustrations show the basic representations using the ET 200SP HA as an example.

1. Insert the BusAdapter into the IO device.

2. Screw the BusAdapter to the IO device using a screwdriver.

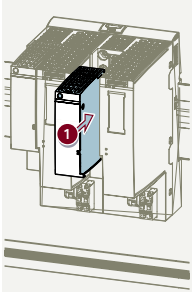

Information on the tightening torque:
Mounting rules (Page 238)

6.7.3 Examples for the number of media interfaces

6.7.3.1 Example of a recommended PROFINET IO system setup

Example

CPU > **Media Interface** > IO Device > IO Device > **Media Interface** > **Media Interface** > IO Device > **Media Interface** > IO Device

6.7.3.2 Example of a PROFINET IO system setup that is not recommended

Example

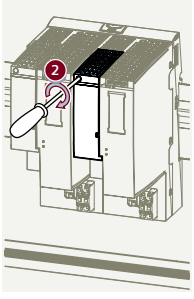

CPU > **Media Interface** > **Media Interface** > IO Device > > **Media Interface** > **Media Interface** > IO Device > > **Media Interface** > **Media Interface** > IO Device

Removal

7

7.1 Removing a server module

Procedure

1. Press the rail release ① on the server module down and move the server module in parallel to the right.

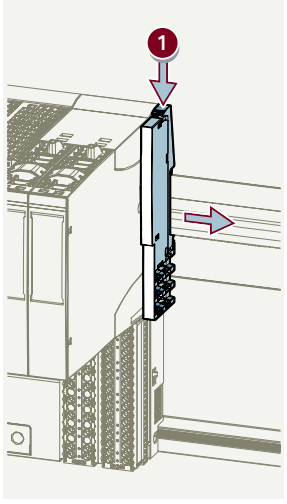

2. While pressing the rail release button, swivel the server module off the rail ②.

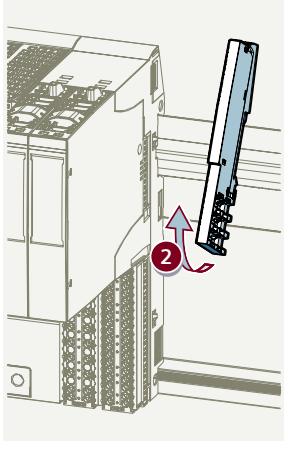

Result

The server module is removed.

7.2 Removing the power bus cover

Requirement

- The server module is removed.

Procedure

Pull the power bus cover out of the carrier module.

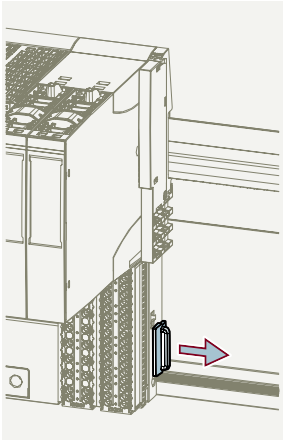

Result

The power bus cover is removed.

7.3 Removing wires

Requirement

Recommendation: The supply voltage is switched off.

Procedure

Note

The following information applies for a terminal block with push-in terminals.

In the case of a terminal block with D-SUB connector, the procedure depends on the D-SUB connector used.

1. Press the screwdriver into the spring release of the terminal as far as it will go.

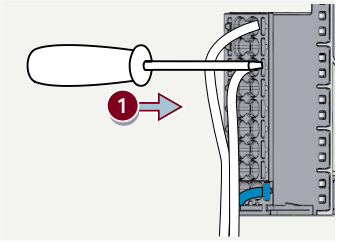

2. Leave the screwdriver in the spring release.
3. Pull out the cable.

Note
Avoid damaging the terminal

Never pull on the wire/cable while pressing the spring release.

Result

The cables are removed.

7.4 Removing a terminal block

Requirement

- The I/O module is removed.
- The supply voltages are switched off.
- The wiring on the terminal block is removed.

Tools required

Screwdriver 3.5 mm

Procedure

Note
Power bus is disconnected

The current potential group is interrupted if a terminal block is removed.

1. The release of the terminal block is located on the bottom of the terminal block. Push the screwdriver into the small opening.

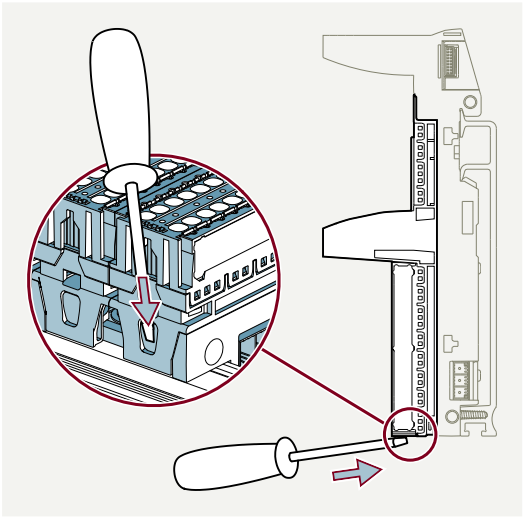

2. To release the latch of the terminal block, tilt the screwdriver slightly upwards while pulling the terminal block upward out of the carrier module.

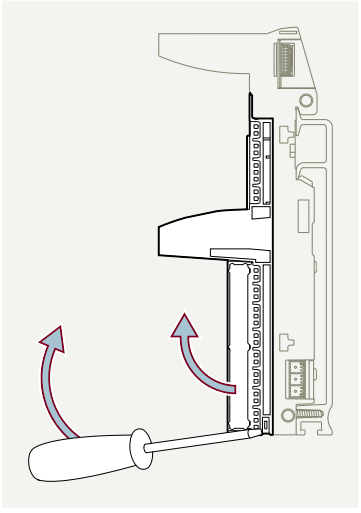

3. Disconnect the terminal block from the carrier module.

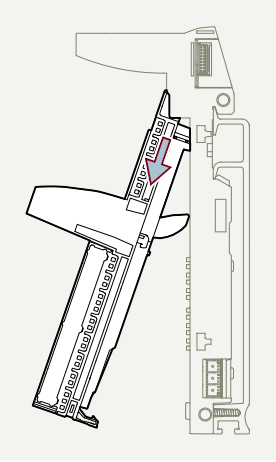

Result

The terminal block is removed.

7.5 Removing the carrier module

Requirement

- The supply voltages are switched off.
- All terminal blocks are remote from the carrier module.

Note

Adjacent components

To remove a specific carrier module, you need to remove the adjacent components on the right (carrier modules or server module). Once there is clearance of approx. 8 mm to the adjacent carrier modules, you can remove the carrier module.

- There are no other components to the right next to the carrier module.

Tools required

- Screwdriver 4.5 mm: For removing the interlocks (1 and 2) of the carrier module
- Screwdriver 4.5 mm or TORX T15 (recommended): For loosening the fixing screws for the rail.

Procedure

1. Use the screwdriver to pull the interlocks (① and ②) out of the carrier module up to the latching point of the carrier module.
2. Loosen the fixing screws ③ for the rail on the carrier module.

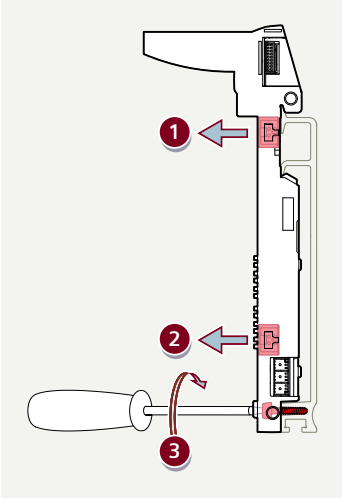

3. Move the carrier module parallel to the right by at least 8 mm.
4. Swivel the carrier module out of the rail ④.
5. Lift the carrier module up off the rail ⑤.

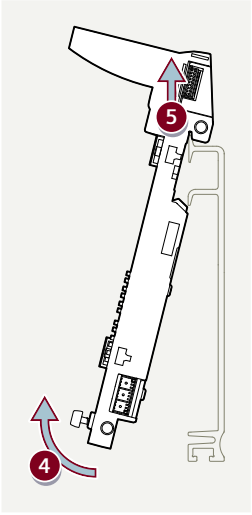

Result

The carrier module is removed.

7.6 Removing a BusAdapter from the interface module

Requirement

Both subsystems must work properly in case of redundant systems.

Tools required

Screwdriver 3.5 mm or TORX T10 (recommended): For loosening the fixing screws on the BusAdapter.

Procedure

1. Remove the bus cable from the BusAdapter if necessary. To do this, remove the bus connectors (RJ45 and FO) or the cable (BA 2xFC).
2. Remove the screws of the BusAdapter using a screwdriver.

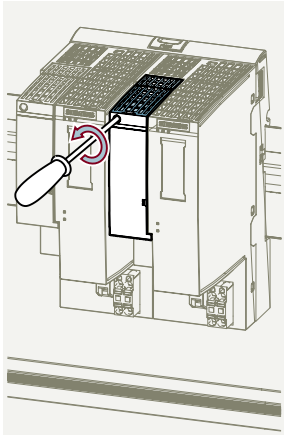

3. Remove the BusAdapter.

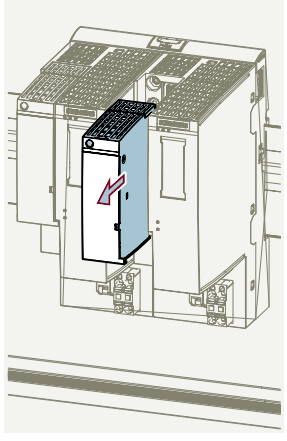

Result

The BusAdapter is removed from the interface module.

7.7 Removing the interface module

Requirement

- The interface module is wired.
- Carrier modules with terminal blocks and I/O modules are located to the right of the interface module.

Tools required

- Screwdriver 4.5 mm or TORX T15 (recommended): For loosening the fixing screws on the mounting rail.
- Screwdriver with 3.5 to 4.5 mm blade width for releasing the interface module.

Procedure

1. Switch off the supply voltage on the interface module.
2. Pull the plug of the supply voltage from the interface module ①.

   Note

   If this plug is not pulled, the release of the interface module is blocked.

3. Insert the tip of the screwdriver gently into the opening of the interface module's release ②.

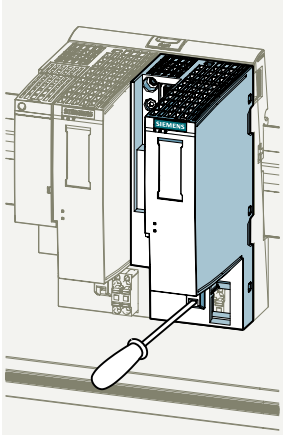

4. Use the screwdriver ③ to gently lever up the interface module ④ while pulling on it at the same time.

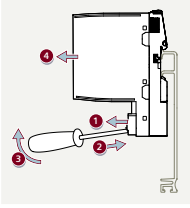
4
1
2
3

Note

The BusAdapter can remain plugged into the interface module.

Result

The interface module is removed.

7.8 Removing the carrier module for the interface module

Requirement

- The supply voltages are switched off.
- All adjacent components to the right (carrier modules or server module) have been removed.
- There must be at least 8 mm of clearance to adjacent carrier modules.

Procedure

1. Swivel the carrier module out of the mounting rail.

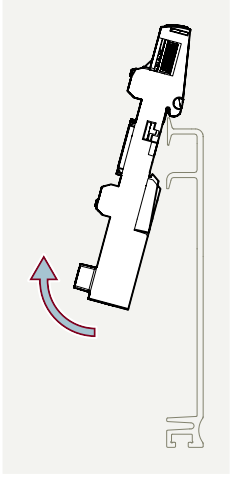

Result

The carrier module for the interface module is removed.

7.9 Pulling out I/O modules with output disable switch

Requirement

NOTICE
Dangerous plant conditions possible (disconnect the load) • Inserting or removing digital output modules with applied load and with applied supply voltage can result in dangerous conditions in your plant. • I/O modules with an output disable switch (see figure below): If you want to put these modules into operation, you need to press the output disable switch for 3 seconds to disconnect the load from the module. Only then it is permissible to pull out the module during operation. I/O modules with no load can run again only after restarting the IM or pulling/plugging. Failure to comply may result in material damage to the IO device or to the connected sensors. Insert and remove an I/O module only with disconnected load. When using in hazardous areas, read the information in section "Currently valid markings and approvals (Page 169)".

- The load is switched off.
- The supply voltages are switched off.

Procedure

1. Press the output disable switch for 3 seconds.

   Note

   The I/O module signals the "Activated" state with LEDs:

   - LED DIAG: Flashes red
   - LED MT: Lights up yellow

   The following diagnostics alarm is generated: "Shutdown via output disable switch" (error ID: 290)

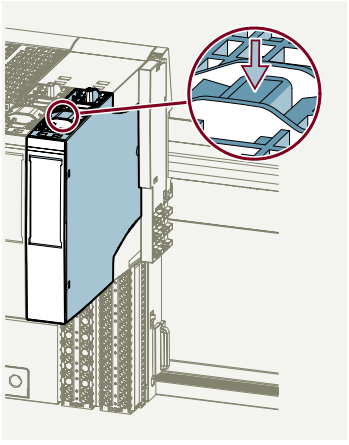

2. Simultaneously press the two release buttons ① on the top and bottom of the I/O module.
3. Hold down the release buttons while pulling out the I/O module towards the front and out of the slot ②.
   Avoid pulling out an I/O module at a slanted angle.

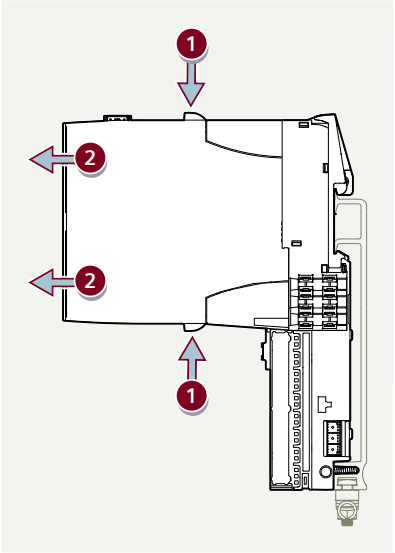

Result

The I/O module with output disable switch is pulled out.

7.10 Pulling out I/O modules without output disable switch

Requirement

NOTICE
Dangerous plant conditions possible (disconnect the load) • Inserting or removing digital output modules with applied load and with applied supply voltage can result in dangerous conditions in your plant. Failure to comply may result in material damage to the IO device or to the connected sensors. Insert and remove an I/O module only with disconnected load. When using in hazardous areas, read the information in section "Currently valid markings and approvals (Page 169)".

- The load is switched off.
- The supply voltages are switched off.

Procedure

1. Simultaneously press the two release buttons ① on the top and bottom of the I/O module.
2. Hold down the release buttons while pulling out the I/O module towards the front and out of the slot ②.
   Avoid pulling out an I/O module at a slanted angle.

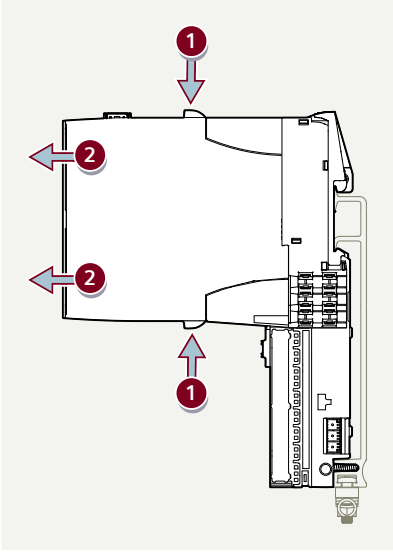

Result

The I/O module without output disable switch is pulled out.

7.11 Removing color-coded labels

Requirement

The wiring on the terminal block is removed.

Tools required

Screwdriver 3 mm

Procedure

Use a screwdriver to carefully pry the color-coded labels out of the holder.

Result

The color-coded labels are removed.

Maintenance

8

8.1 Conditions for pulling and plugging modules during operation

Definition

If you want to remove or insert modules in the "RUN" operating state of the CPU, this is only permissible when you observe specific conditions for the respective modules.

Description

The conditions for removing or inserting modules in the "RUN" operating state of the CPU are shown in the table below:

Modules	Inserting and removing	Conditions
BusAdapter	Yes	Only in redundant mode.
Interface module	Yes	Only in redundant mode.
Carrier module	Yes	During operation, only expandable or remove last module without an I/O module.
Terminal block	Yes	During operation, only expandable or removable without an I/O module **NOTE:** This interrupts the power bus.
I/O modules	Yes	**NOTICE** Removing or inserting digital output modules with applied load and with applied supply voltage can result in dangerous conditions in your plant. You can find information on disconnecting the load in the section "Pulling out I/O modules with output disable switch (Page 137)". IO redundancy: You can remove an I/O module during operation when the other I/O module is fully functional. During the module exchange, attention must be paid to neighboring modules not being impaired.
Server module	Yes	---

You can remove and insert any number of I/O modules during operation. The interface module and the inserted I/O modules remain in operation.

WARNING

Unlocking when removing a module

When removing a module, make sure that no other modules are unlocked.

Otherwise, undesired plant reactions or plant downtimes may occur.

8.2 Maintenance position of the I/O modules

8.2.1 Set the I/O module to the maintenance position with the output disable switch

Requirement

⚠ CAUTION

Using the maintenance position

If I/O modules are in the maintenance position, you must ensure the following:

Ensure that no dangerous situations can occur by plugging the I/O modules into the terminal block.

You can avoid this in principle if you completely remove the I/O modules from the IO device.

NOTICE

Dangerous plant conditions possible (disconnect the load)

- Inserting or removing digital output modules with applied load and with applied supply voltage can result in dangerous conditions in your plant.
- I/O modules with an output disable switch (see figure below):
  If you want to put these modules into operation, you need to press the output disable switch for 3 seconds to disconnect the load from the module.
  Only then it is permissible to pull out the module during operation.
  I/O modules with no load can run again only after restarting the IM or pulling/plugging.

Insert and remove an I/O module only with disconnected load.

Failure to comply may result in material damage to the IO device or to the connected sensors.

When using in hazardous areas, read the information in section "Currently valid markings and approvals (Page 169)".

- The load is switched off.
- The supply voltages are switched off.

Procedure

1. Press the output disable switch for 3 seconds.

Note

The I/O module signals the "Activated" state with LEDs:

- DIAG LED: Flashes red
- MT LED: Lights up yellow
- All channel LEDs are switched off

Diagnostic alarm: "Shutdown via output disable switch" (error ID: 290)

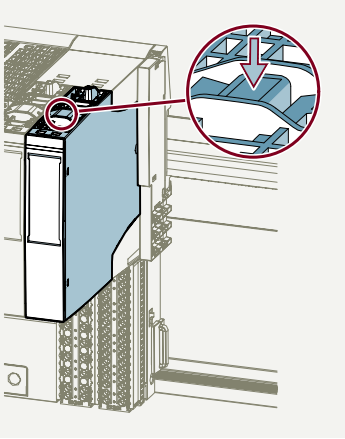

2. Simultaneously press the release buttons on the top and bottom of the I/O module (① see figure in Step 3).
3. Hold down the release buttons and pull the I/O module slightly (approx. 3 mm) towards the front and out of the slot ②.
   Avoid pulling out an I/O module at a slanted angle.

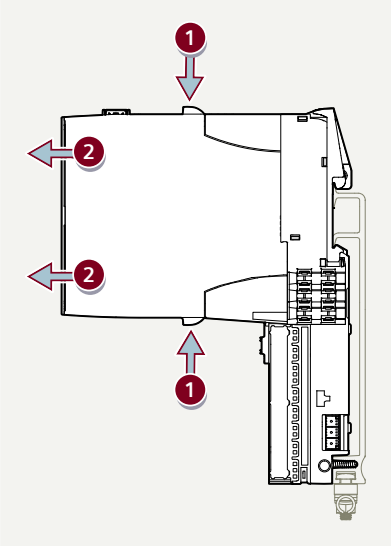

4. Release the release buttons.
5. Pull the I/O module further out of the terminal block until it locks into the maintenance position and cannot be pulled out completely without pressing the release buttons.

Result

The I/O module is in the maintenance position.

8.2.2 Set the I/O module to the maintenance position without the output disable switch

Requirement

⚠ CAUTION
Using the maintenance position
If I/O modules are in the maintenance position, you must ensure the following:
Ensure that no dangerous situations can occur by inserting the I/O modules into the terminal block.
You can avoid this in principle if you completely remove the I/O modules from the IO device.

- The load is switched off.
- The supply voltages are switched off.

Procedure

1. Simultaneously press the release buttons on the top and bottom of the I/O module (① see figure in Step 2).
2. Hold down the release buttons and pull the I/O module slightly (approx. 3 mm) towards the front and out of the slot ②.
   Avoid pulling out an I/O module at a slanted angle.

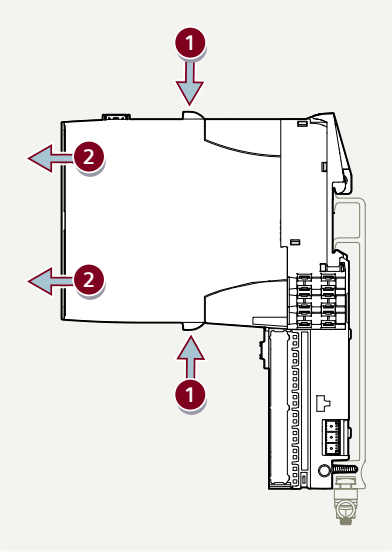

3. Release the release buttons.
4. Pull the I/O module further out of the terminal block until it locks into the maintenance position and cannot be pulled out completely without pressing the release buttons.

Result

The I/O module is in the maintenance position.

8.3 Notes on replacing the I/O modules

When replacing the I/O modules, data and a part of the coding element of the previous I/O module are retained.

Coding element

The first time you insert an I/O module, part of the coding element locks into the terminal block. When you replace an I/O module with the same module type, the correct coding element is already in the terminal block. When you replace an I/O module with a different module type, you must remove the coding element.

Coding element (for terminal block) (Page 31)

Module identification - read and transfer data

If data have been configured for module identification in the plant, you must transfer this data after plugging a module in again.

Applications

- You can replace the I/O module with the same module type.
  Replacing an I/O module (Page 146)
- The coding element must be removed from the terminal block when you replace the I/O module with a different module type.
  Removing the coding element from the terminal block (Page 147)
- You can replace the I/O module with a different module type.
  Replacing an I/O module with another type (Page 148)
- You can read back the module identification into the project.
  Read back data for module identification into the project (Page 149)
- You can read transfer the module identification to the module.
  Transfer data for module identification after plugging in the I/O module (Page 149)

8.4 Replacement of I/O modules

8.4.1 Replacing an I/O module

Requirement

The I/O module has been pulled out.

Procedure

1. Remove the loose part of the coding element of the new I/O module on its underside.

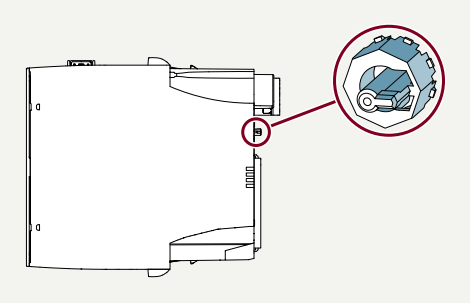

2. Insert the new I/O module (same module type) into the terminal block until you hear it latch into place.

Note

Avoid inserting an I/O module at an angle.

3. Identify the new I/O module with labeling strips and a reference identification label.

Result

The I/O module has been replaced.

8.4.2 Removing the coding element from the terminal block

Requirement

The previous I/O module has been removed.

NOTICE
Do not manipulate the coding element Changes to the coding element can result in dangerous states in your plant and/or damage to the outputs of the I/O module. To avoid physical damage, do not manipulate the coding.

Procedure

1. Use a screwdriver to lever the coding element from the terminal block.
2. Plug the removed part of the coding element onto the part of the coding element in the pulled I/O module.

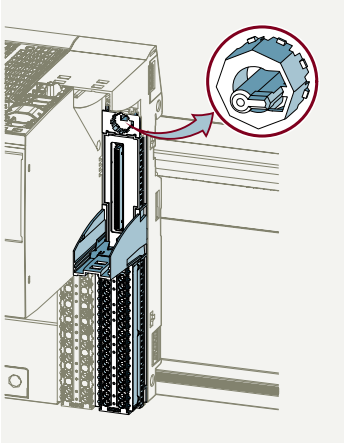

Result

The coding element has been removed from the terminal block.

8.4.3 Replacing an I/O module with another type

Requirement

- The application planning is completed.
- The terminal block is suitable for accommodating the new I/O module.
- The wiring has been or will be adapted to the new I/O module.
- The configuration has been or will be adapted to the new I/O module.
- The previous I/O module has been removed.
- The coding element has been removed from the terminal block.

Procedure

1. Insert the new I/O module (other module type) into the terminal block until you hear it latch into place.
2. Identify the new I/O module with labeling strips and a reference identification label.

Result

An I/O module has been replaced with a different type.

8.4.4 Read back data for module identification into the project

Requirement

- Data for module identification are configured in the plant.
- The configuration tool is open.

Procedure

1. Select the I/O module.
2. Read back the module information into the project while you are connected to the device.

Result

Data transmitted to the I/O module for the module identification are read back into the project.

8.4.5 Transfer data for module identification after plugging in the I/O module

Requirement

- Data for module identification are configured in the plant.
- The configuration tool is open.

Procedure

1. Select the I/O module.
2. Transfer the module identification to the module while you are connected to the device.

Result

Data existing in the configuration for module identification are transferred.

8.5 Replacing a terminal block

Requirement

- The terminal block is installed.
- The terminal block is wired.
- The supply voltage is switched off.

Tools required

3 to 3.5 mm screwdriver

Procedure

NOTICE
Power busbars of the potential group are interrupted The power busbars of potential groups are interrupted when a terminal block is replaced.

1. Remove the I/O module.
   Pulling out I/O modules with output disable switch (Page 137)
   Pulling out I/O modules without output disable switch (Page 139)
2. Remove the coding element from the terminal block.
   Removing the coding element from the terminal block (Page 147)
3. Loosen the wiring on the terminal block.
   Removing wires (Page 128)
4. Remove the terminal block.
   Removing a terminal block (Page 129)
5. Install the new terminal block.
   Installing the terminal block (Page 104)
6. Wire the terminal block.
   Connecting solid cables without ferrule (Page 229)
   Connecting stranded cables with ferrule or ultrasonic compression (Page 229)
   Connecting stranded cables without ferrule (Page 230)
7. Insert the I/O module into the terminal block.
   Inserting an I/O module (Page 105)
8. Switch on the supply voltage on the terminal block.

Result

The terminal block has been replaced.

8.6 Factory settings

8.6.1 Reset to factory settings

Definition

The "Reset to factory settings" function resets the interface module to the factory state.

8.6.2 Resetting the interface module to factory settings using STEP 7

Requirement

- There is a direct connection to the interface module.
- The configuration tool is open.

Procedure

Note

Redundant configuration

For an IO device with 2 interface modules (redundant configuration), this action must be performed separately for each interface module.

1. Select the interface module.
2. Switch to edit mode.
3. Reset the interface module with the respective option to the factory settings.

Note

Failure of downstream stations is possible

Downstream stations on a bus segment can fail when the factory settings are restored on an interface module.

Note

Substitute value reaction of the installed I/O modules on reset to factory settings

The I/O modules of the ET 200SP HA distributed I/O system are placed in a non-configured state when they are reset to the factory settings.

Result

- The interface module performs "Reset to factory settings".
- The properties of the interface module are reset to the following values:

Properties	Value
Parameters	Default setting
IP address	Not available
Device name	Not available
MAC address	Available
I&M data	Identification data (I&M0) available Maintenance data (I&M1, I&M2, I&M3) not available
Firmware version	Available

8.7 Performing a firmware update for the components

Requirements

NOTICE
Requirements for the firmware update of the F-I/O modules • The F-CPU must be in the "STOP" operating state. • The supply voltage of the respective F-I/O module is connected.

Note

Updating I/O modules in IO redundancy

If the firmware of two redundantly operating I/O modules is to be changed, note the following:

The update of the second I/O module must not be started until the I/O module that was updated first is fully operational again.
Readiness for operation is displayed in the input address space on a channel-specific basis (value status QI = good).

- You are familiar with the general procedure for updating the firmware.
- A connection to the IO device (ET 200SP HA Station) is possible.
- The storage location of the file for the firmware update is known.
- The engineering system is open.

Procedure

1. Open the hardware configuration.
2. Perform the firmware update.

Result

The firmware update is performed for a component.

8.8 Communication error

8.8.1 Communication error "IO redundancy warning" (maintenance event: error code 121H)

Definition

The maintenance event "IO redundancy warning" (error code 121H) indicates an error in the communication between I/O modules with IO redundancy.

Description

The following causes are possible:

- Right I/O module defective
- Left I/O module defective
- Terminal block defective

8.8.2 Remedy communication error "IO redundancy warning" (maintenance event: Error code 121H)

Requirement

The maintenance event "IO redundancy warning" (error code 121H) is displayed.

Procedure

1. Replace the right module.
   Replacing an I/O module (Page 146)
2. If the error remains unchanged: Replace the left module.
   Replacing an I/O module (Page 146)
3. If the error continues: Replace the terminal block.
   Replacing a terminal block (Page 149)

Note

Switching behavior

As soon as you pull the left module, the right module takes over process management. With input modules, the process values fail for the maximum duration of the redundancy changeover time.

You can find information on the redundancy changeover time in the technical specifications of the respective I/O module.

Result

The error "IO redundancy warning" (error code 121H) is remedied.

8.9 Run firmware update for the server module

Requirements

- A connection to the IO device is possible.
- The storage location of the file for the firmware update is known.

Procedure

1. Open the configuration tool.
2. Show the reachable devices
3. Select the station.
4. Check the suitability of the "Firmware file" for the firmware update.
5. Select the option that activates the firmware immediately after the download.
6. Update the firmware using the respective function of the configuration tool.

Result

The firmware of the server module is updated.

I/O station with fail-safe I/O modules

9

9.1 Notes on redundant automation systems

Automation system with ET 200SP HA distributed I/O system and PROFINET IO

The IO controller exchanges safety-related and non-safety-related data with fail-safe and non-fail-safe ET 200SP HA modules.

Example configuration of automation system with ET 200SP HA and PROFINET IO (Page 156)

Safety Integrated

Proven technologies and systems from the world of automation technology are used for safety technology.

Safety Integrated (Page 156)

Fail-safe automation systems (F-systems)

F-systems are used in plants with increased safety requirements.

Fail-safe automation systems (F-systems) (Page 157)

9.2 Automation systems

9.2.1 Example configuration of automation system with ET 200SP HA and PROFINET IO

Example

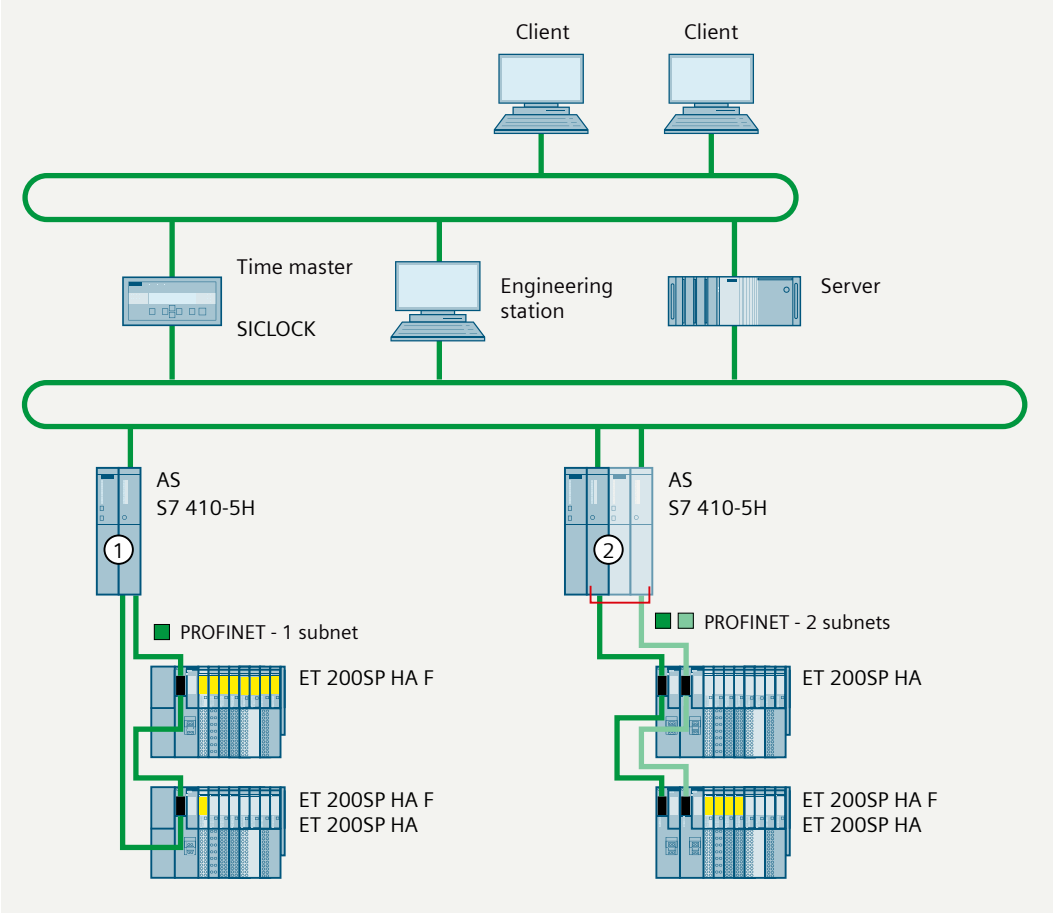

9.2.2 Safety Integrated

Definition

Safety Integrated is the integrated safety concept for automation and drive technology from Siemens.

Description

Safety Integrated comprises the complete safety sequence from sensor and actuator over fail-safe I/O modules to the controller including safety-related communication over standard fieldbus. In addition to their functional tasks, drives and controllers also take on safety tasks.

9.2.3 Fail-safe automation systems (F-systems)

Definition

Fail-safe automation systems (F-systems) are used in plants with increased safety requirements. F-systems are used in process controllers that transfer the process into the safe state through disconnection. This means F-systems control processes for which immediate disconnection does not entail any danger to people or the environment.

9.3 Fail-safe I/O module

Definition

The fail-safe I/O modules are mechanically compatible with the non-fail-safe I/O modules. The fail-safe I/O modules detect the current process status or trigger the required responses through the sensors and actuators connected to the terminal block.

Fail-safe I/O modules have an internal two-channel design.

Two integrated processors monitor each other and automatically test the input or output circuit.

In case of an error, the processors set the fail-safe I/O module to the configured safe state.

Notes on fail-safe I/O modules (F-I/O modules) (Page 158)

View

Example view of a fail-safe I/O module, recognizable by the yellow color of the housing.

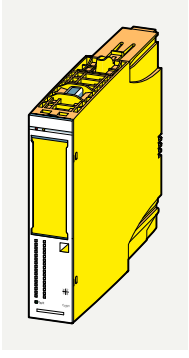

- Fail-safe input modules (F-input modules) (Page 161)
- Fail-safe output modules (F-output modules) (Page 161)

9.4 Notes on fail-safe I/O modules (F-I/O modules)

The CPU communicates with a fail-safe I/O module via the safety-oriented PROFIsafe bus profile.

Fail-safe I/O module (Page 31)

Configuration of the F-I/O modules

It is possible to mix fail-safe and non-fail-safe I/O modules in one I/O device or one potential group. These do not have to be operated in separate potential groups.

Note

The mounting rail must be grounded for the operation of fail-safe modules.

Example configuration for distributed I/O with fail-safe and non-fail-safe I/O modules (Page 160)

Note the restrictions with regard to the nominal voltage when certain operating heights are exceeded: Mechanical and climatic environmental conditions (Page 183)

Configuring the F-I/O modules

Specific hardware and software requirements must be met for you to configure the F-I/O modules of the ET 200SP HA.

Preface (Page 11)

Application area of F-I/O modules

F-I/O modules enable the use of safety technology in conventional designs, for example, closing safety valves or switching off pumps.

You only use the F-I/O modules in safety mode. Non-fail-safe operation is not possible.

Safety mode (Page 161)

Achievable safety classes

The F-I/O modules are equipped for safety mode with integrated safety functions.

You can achieve the safety classes in the table below when you ensure the following:

- Parameter assignment of the safety functions
- The permissible combinations are observed when using fail-safe and non-fail-safe I/O modules.
- Arrangements and wiring of the sensors and actuators according to the specifications in the documentation of the I/O modules.

according to IEC 61508	according to ISO 13849-1	
SIL3	Category 3	(PL) Performance Level d
SIL3	Category 4	(PL) Performance Level e

Power supply with safe electrical isolation

Note

Recommendation in accordance with NAMUR NE 21, IEC 61131-2 and EN 298

Use power supplies with a mains buffering time of at least 20 ms.

Reaction in the overvoltage range

By passivating inputs and outputs, F-I/O modules react fail-safe in the overvoltage range of 32 V DC to 36 V DC. For overvoltages greater than 36 V DC, the F-I/O modules are de-energized permanently.

Note

Overvoltage protection

Options for overvoltage protection:

- Use a power supply that ensures that the fault voltage U_m is not exceeded even in case of a fault.
  See also the information in the technical specification on overvoltage protection in case of an internal error.
- Use voltage limiting measures, such as the use of a surge protection device.

9.5 Overview of fail-safe I/O modules

9.5.1 Example configuration for distributed I/O with fail-safe and non-fail-safe I/O modules

Example

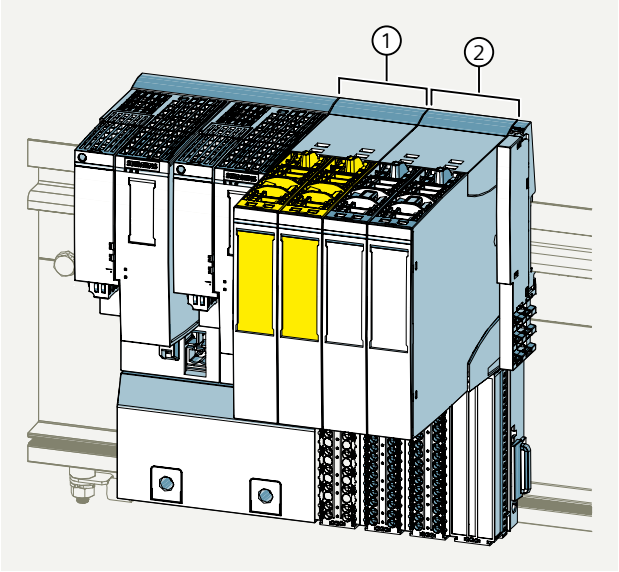

① Fail-safe I/O modules
② Non-fail-safe I/O modules

Schematic example configuration:

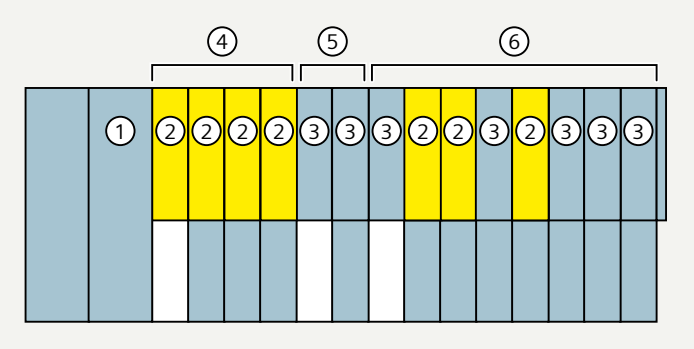

① IM 155-6 PN HA (6DL1155-6AU00-0PM0)
② F-I/O module
③ Non-fail-safe module
④ Potential group with F-I/O modules
Achievable safety class SIL3/Cat.4/PLe
⑤ Non-fail-safe potential group
⑥ Mixed potential group with fail-safe and non-fail-safe I/O modules
Achievable safety class for the F-I/O modules SIL3/Cat. 4/PLe

9.5.2 Fail-safe input modules (F-input modules)

Definition

F-input modules detect the signal states of safety-related sensors and send corresponding safety message frames to the CPU.

9.5.3 Fail-safe output modules (F-output modules)

Definition

F-output modules are suitable for safety-related switching operations with short-circuit monitoring and cross-circuit monitoring to the actuator.

9.5.4 Safety mode

Definition

Safety mode is the operating mode of F-I/O modules in which safety-related communication via safety message frames is possible.

9.6 Notes placed on sensors and actuators for fail-safe I/O modules

See important information below:

- F-input module and connected sensors
- F-output module and connected actuators

General requirements on sensors and actuators

For safety-related use of sensors and actuators, you must observe the following:

Note

Validity of safety parameters

The safety parameters in the technical specifications are valid for a mission time of 20 years and a repair time of 100 hours. If a repair is not possible within 100 hours, remove the relevant F-I/O module from the terminal block or switch off its supply voltage before 100 hours elapse. The F-I/O module switches itself off automatically after 100 hours.

For repair information, refer to the documentation of the F-I/O modules.

⚠ WARNING

Responsibility for safety

Note that significant responsibility for the safety of instrumentation lies with the sensors and actuators. Also, keep in mind that sensors and actuators generally do not have proof-test intervals of 20 years according to IEC 61508:2010 without a significant loss of safety.

The probability of dangerous faults or the rate of dangerous faults of a safety function must adhere to an SIL-dependent upper limit. You can find the values achieved under "Safety parameters" in the technical specifications of the F-I/O modules.

To achieve the respective safety class, correspondingly qualified sensors and actuators are required.

Requirements for the duration of the sensor signals

Refer to the documentation of the F-I/O modules for information.

Additional actuator requirements

The F-output modules regularly test the outputs. The test function can be configured.

The following table shows the behavior of the I/O modules when testing the outputs:

Behavior	Adapting the behavior of the plant
During the test, the F-output module briefly disables enabled outputs and briefly enables disabled outputs.	Configuring the maximum period of the test pulses (dark and light period)
Quickly responding actuators can briefly fail during the test or they can be enabled.	If the process does not tolerate the test, the following options are available as a solution: • Configure pulse duration of light or dark test • Use actuators with sufficient time lag.

NOTICE

Voltages greater than 24 V DC

When the actuators switch voltages greater than 24 V DC (e.g. 230 V DC), you must ensure safe electrical isolation between the outputs of an F-output module and the parts carrying the higher voltage (in accordance with IEC 60664-1).

- Safe electrical isolation is usually met for relays and contactors.
- For semiconductor switching devices, you must ensure that electrical isolation is implemented as needed.

Technical specifications of the sensors and actuators

Also refer to the documentation of the F-input modules for information on the technical specifications for the selection of encoders and actuators.

9.7 Useful information about the reaction to errors in fail-safe I/O modules

Safe state (safety concept)

The basis of the safety concept is that a safe state exists for all process variables.

Note

For digital F-I/O modules, this is the value "0". This applies to sensors and actuators.

Reactions to errors and startup of the IO device

The safety function causes fail-safe modules to use substitute values instead of process values (safe state) in the following cases (passivation of the fail-safe I/O module):

- When starting the automation system
- In case of errors in the safety-related communication between CPU and F-I/O module via the safety protocol according to PROFIsafe (communication error)
- In the event of fail-safe I/O/channel errors (e.g. cross-circuit, discrepancy error)

Detected errors are entered in the diagnostic buffer of the CPU and communicated to the safety program in the CPU.

F-I/O modules cannot save errors retentively. After a POWER OFF/ON, an error that is still pending is recognized again during starting. The error cannot be saved via the standard program.

Note

For channels that are "disabled" via parameter assignment, there is no diagnostic response and troubleshooting in case of a channel fault. Not even if such a channel is affected indirectly through a channel group error ("Channel enabled/disabled" parameter).

Troubleshooting

Observe the following standards:

- IEC 61508-1:2010; section 7.15.2.4
- IEC 61508-2:2010; section 7.6.2.1 e

Follow these steps:

1. Diagnostics and repair of the error
2. Revalidation of the safety function
3. Logging in the maintenance report

Note

Documentation of troubleshooting

Note the application-specific and country-specific standards and regulations for the required documentation.

Passivation, substitute value output, and reintegration

Module type	Response to passivation
F-input module	Instead of the process values pending at the fail-safe inputs, the automation system provides substitute values (0) for the safety program.
F-output modules	Instead of the output values provided by the safety program, the automation system transfers substitute values (0) to the fail-safe outputs. If "Keep last valid value" is configured, the last valid process value 0 or 1 is kept in case of events, such as termination of the PROFIsafe communication or CPU stop.

The use of substitute values depends on the automation system used and the type of error that occurred (F-I/O, channel or communication error). Depending on the configuration, substitute values are only used for the affected channel or all channels of the affected F-I/O module.

Module type	Response to reintegration
F-input module	The pending process values for the safety program are provided at the fail-safe inputs.
F-output modules	The output values provided in the safety program are transferred to the fail-safe outputs.

The switchover from substitute values to process values (reintegration of an F-I/O module) takes place automatically or only after acknowledgment by the user in the safety program. Information on how to eliminate faults can be found in the documentation of the respective F-I/O module under "Diagnostic messages".

You can find additional information on passivation and reintegration in the documentation of the respective F-I/O module.

Behavior of an F-input module in case of a communication problem

F-input modules behave differently in case of a communication problem than in case of other errors.

In case of a communication problem, the current process values remain at the inputs of the F-I/O module. The channels are not passivated. The current process values are passivated in the CPU.

9.8 Notes on readback error through crosstalk in F-output modules

In case of shared routing of fail-safe digital output signals and fail-safe digital input signals in one cable, read back failures can occur at the F-output modules.

Cause: Capacitive crosstalk

During the bit pattern test of the outputs or the sensor supply of the inputs, the steep switching edge of the output drivers can result in crosstalk to other output or input channels that are not activated due to the capacitive coupling of the cable. The read back can be triggered for these channels. A cross circuit/short circuit is detected which results in safety-oriented tripping.

Solution:

- Separate cables for F-input modules, F-output modules or non-fail-safe I/O modules
- Separate cables for F-DQ channels
- Coupling relays
- Disable testing of the sensor supply if permitted by the required safety class.

Cause: Magnetic crosstalk

An inductive load that is connected to the F-DQ channels, can result in coupling a strong magnetic field.

Solution:

- Physically separate the inductive loads or shield the magnetic field.
- Parameterize a longer period for the dark test.

9.9 Response and changeover times for fail-safe I/O modules

Definition

The response time indicates the time interval that elapses between the event and the reaction to the event. The response time includes the time for processing and transfer of the signal.

Response time for fail-safe I/O modules

You must take into account the following maximum response time of the interface module when calculating the response times of the fail-safe I/O modules:

- Maximum response time = configured update time + 2 ms.

This time corresponds to the parameter Tslave in the S7ftime of S7 F Systems.

Redundancy changeover time of the interface module

When the IM 155-6 interface module is operated in redundancy mode, you must take into account the changeover time to the active communication channel. During a redundancy changeover, the input and output values may be frozen for this amount of time.

The I/O modules of the ET 200SP HA have been divided into various categories with regard to their user data length.

- Category 0: Module versions with a user data length in the input or output area of ≤ 32 bytes in each case
- Category > 0: Module versions with a user data length at the input or output area > 32 bytes

For determining the redundancy changeover time (parameter Tslave_so in the S7ftime of S7 F Systems), the following approximate values apply:

- 100 ms for a configuration of up to 15 modules of category 0 only
- 200 ms in maximum configuration with any modules

Information on the user data lengths can be found in the technical specifications of the I/O modules in Online Support. The allocated address range for the inputs of input modules and the allocated address range for the outputs of output modules are relevant for the user data length.

https://support.industry.siemens.com/cs/start?lc=en-WW

10 Technical specifications

10.1 Standards and approvals

10.1.1 Currently valid markings and approvals

Introduction

This section contains the technical specifications of the system:

- The standards and test values that the ET 200SP HA complies with and fulfills.
- The test criteria according to which the ET 200SP HA was tested.

Technical specifications of the modules

The technical specifications of the individual modules are provided in the equipment documentation for the relevant modules. If there are deviations between the statements in this document and the equipment documentation, the statements in the equipment documentation take priority.

Validity of the information on the components

NOTICE
Markings and approvals In the documentation, you can find the markings and approvals which are generally possible or planned in the system. However, only the label or approval printed on the component of the distributed I/O system is valid!

Reference

The certificates for the markings and approvals can be found on the Internet under Service&Support (https://support.industry.siemens.com/cs/ww/en/).

Safety information

WARNING

Personal injury and damage to property may occur

Note the following information for use in hazardous areas:

- Personal injury and property damage can be incurred if the connectors of the distributed I/O system are pulled out during operation or if the output disable switch is pressed.
- In hazardous areas, always ensure that power to the distributed I/O system is switched off before removing the plug connections or pressing the output disable switch of an I/O module.

Note

The ET 200SP HA distributed I/O system is intended for use in industrial environments; when used in residential areas, it can affect radio/television reception.

10.1.2 EU Declaration of Conformity

Certificate

Certificate number	**Khe055-09/2024**
Standards	2014/35/EU "Elektrische Betriebsmittel zur Verwendung innerhalb bestimmter Spannungsgrenzen" (Niederspannungsrichtlinie)
	2014/30/EU "Elektromagnetische Verträglichkeit" (EMV-Richtlinie)
	2014/34/EU "Geräte und Schutzsysteme zur bestimmungsgemäßen Verwendung in explosionsgefährdeten Bereichen" (Explosionsschutzrichtlinie)
	2011/65/EU "Beschränkung der Verwendung bestimmter gefährlicher Stoffe in Elektro- und Elektronikgeräten" (RoHS-Richtlinie)
	2006/42/EG "Richtlinie über Maschinen" (Maschinenrichtlinie) für fehlersichere Module (F-Module)
Labeling	CE
This information applies to the products named in the following certificate: CE certificate (ET 200SP HA) | SIOS (https://support.industry.siemens.com/cs/ww/en/view/109749438)	

Low-Voltage Directive

2014/35/EU "Electrical equipment designed for use within certain voltage limits" (Low-Voltage Directive)
According to the requirements of EN 61010-2-201, the components of the product have been tested in compliance with the Low-Voltage Directive.

EMC Directive

2014/30/EU "Electromagnetic compatibility" (EMC Directive)

Industrial applications

SIMATIC products are designed for use in industrial applications.

Area of application	Interference emission requirements	Interference immunity requirements
Industry	EN 61131-2	EN 61131-2

Use in residential areas

If you use the ET 200SP HA System in residential areas, you must ensure compliance with the radio frequency interference values according to EN 61000-6-3.

Suitable measures for achieving RF suppression to Limit Value Class B include:

- Installation of ET 200SP HA Systems in grounded control cabinets/switch boxes
- Use of noise filters in the supply lines

Use in power plants applications

The ET 200SP HA System fulfills the EMC requirements according to EN 61000-6-5.

10.1.3 CCC approval

Certificate number	**2020322310002882**
	2020322310003109
	2022322310004715
Classification	Ex nA IIC T4 Gc
Labeling	
This information applies to the products named in the following certificates: • CCC certificate no. 2020322310002882 (ET 200SP HA) | SIOS (https://support.industry.siemens.com/cs/ww/en/view/109784397) • CCC certificate no. 2020322310003109 (ET 200SP HA) | SIOS (https://support.industry.siemens.com/cs/ww/en/view/109824653) • CCC certificate no. 2022322310004715 (ET 200SP HA) | SIOS (https://support.industry.siemens.com/cs/ww/en/view/109812993)	

10.1.4 UK Declaration of Conformity

Certificate number	**DEKRA 21UKEX0017 X**
Importer UK:	Siemens plc Manchester M20 2UR
Labeling	UK CA
This information applies to the products named in the following certificate: UKCA certificate (ET 200SP HA) | SIOS (https://support.industry.siemens.com/cs/ww/en/view/109822895)	

The ET 200SP HA distributed I/O system meet the requirements and protection targets of the following regulations and related amendments:

- SI 2016 No. 1101, The Electrical Equipment (Safety) Regulations 2016 (low voltage)
- SI 2016 No. 1091, The Electromagnetic Compatibility Regulations 2016 (EMC)
- SI 2016 No. 1107, The Equipment and Protective Systems Intended for Use in Potentially Explosive Atmospheres Regulations 2016 (explosion protection)
- SI 2012 No. 3032, The Restriction of the Use of Certain Hazardous Substances in Electrical and Electronic Equipment Regulations 2012 (RoHS)
- SI 2008 No. 1597, The Supply of Machinery (Safety) Regulations 2008 for ET 200SP HA safety components (fail-safe modules)

10.1.5 Explosion protection

ATEX - Approval DEKRA 19ATEX0114X

Type examination certificate number	**DEKRA 19ATEX0114X**	
Standards	EN IEC 60079-0	
	EN IEC 60079-7 + A1	
Labeling	Ex	II 3 G Ex ec IIC T4 Gc
This information applies to the products named in the following certificate: DEKRA 19ATEX0114X (ET 200SP HA) | SIOS (https://support.industry.siemens.com/cs/ww/en/view/109822897)		

Special conditions

- The device may only be used in areas with a pollution degree of no more than 2 according to EN 60664-1.
- The modules must be installed in a suitable enclosure that ensures a degree of protection of at least IP54 in accordance with EN 60079-0, taking into account the environmental conditions during use.
- Provisions shall be made to prevent the rated voltage from being exceeded by transient disturbance voltage of more than 119 V.

ATEX - Approval UL 20 ATEX 2468X

Type examination certificate number	UL 20 ATEX 2468X	
Standards	EN IEC 60079-0	
	EN IEC 60079-7 + A1	
Labeling		II 3 G Ex ec IIC T4 Gc
This information applies to the products named in the following certificate: UL 20 ATEX 2468X (ET 200SP HA) | SIOS (https://support.industry.siemens.com/cs/ww/en/view/109792570)		

Special conditions

- The device may only be used in areas with a pollution degree of no more than 2 according to EN 60664-1.
- The modules must be installed in a suitable enclosure that ensures a degree of protection of at least IP54 in accordance with EN 60079-0, taking into account the environmental conditions during use.
- Provisions shall be made to prevent the nominal voltage from being exceeded by transient disturbance voltage of more than 140% of the peak nominal voltage.
- The enclosure must only be accessible with the appropriate tools

IECEx - Approval IECEx DEK 19.0073X

Certificate number	IECEx DEK 19.0073X
Standards	IEC 60079-0
	IEC 60079-7
Labeling	Ex ec IIC T4 Gc
This information applies to the products named in the following certificate: IECEx DEK 19.0073X (ET 200SP HA) | SIOS (https://support.industry.siemens.com/cs/ww/en/view/109822900)	

Special conditions

- The device may only be used in areas with a pollution degree of no more than 2 according to IEC 60664-1.
- The modules must be installed in a suitable enclosure that ensures a degree of protection of at least IP54 in accordance with IEC 60079-0, taking into account the environmental conditions during use.
- Provisions shall be made to prevent the rated voltage from being exceeded by transient disturbance voltage of more than 119 V.

IECEx - Approval ULD 20.0035X

Type examination certificate number	IECEx ULD 20.0035X
Standards	IEC 60079-0
	IEC 60079-7
Labeling	Ex ec IIC T4 Gc
This information applies to the products named in the following certificate: IECEx ULD 20.0035X (ET 200SP HA) | SIOS (https://support.industry.siemens.com/cs/ww/en/view/109792571)	

Special conditions

- The device may only be used in areas with a pollution degree of no more than 2 according to EN 60664-1.
- The modules must be installed in a suitable enclosure that ensures a degree of protection of at least IP54 in accordance with IEC 60079-0, taking into account the environmental conditions during use.
- Provisions shall be made to prevent the nominal voltage from being exceeded by transient disturbance voltage of more than 140% of the peak nominal voltage.
- The enclosure must only be accessible with the appropriate tools

UKEx - Approval DEKRA 21UKEX0017 X

Certificate number	DEKRA 21UKEX0017 X	
Standards	EN IEC 60079-0	
	EN IEC 60079-7 + A1	
Labeling	Ex	II 3 G Ex ec IIC T4 Gc
This information applies to the products named in the following certificate: DEKRA 21UKEX0017 X (ET 200SP HA) | SIOS (https://support.industry.siemens.com/cs/ww/en/view/109822895)		

Special conditions

- The device may only be used in areas with a pollution degree of no more than 2 according to EN 60664-1.
- The modules must be installed in a suitable enclosure that ensures a degree of protection of at least IP54 in accordance with EN 60079-0, taking into account the environmental conditions during use.
- Provisions shall be made to prevent the rated voltage from being exceeded by transient disturbance voltage of more than 119 V.

UKEx - Approval UL21UKEX2361X

Certificate number	UL21UKEX2361X
Standards	EN IEC 60079-0
	EN IEC 60079-7 + A1

Certificate number	UL21UKEX2361X	
Labeling		II 3 G Ex ec IIC T4 Gc
This information applies to the products named in the following certificate: UL21UKEX2361X (ET 200SP HA) | SIOS (https://support.industry.siemens.com/cs/ww/en/view/109809555)		

Special conditions

- The device may only be used in areas with a pollution degree of no more than 2 according to EN 60664-1.
- The modules must be installed in a suitable enclosure that ensures a degree of protection of at least IP54 in accordance with EN 60079-0, taking into account the environmental conditions during use.
- Provisions shall be made to prevent the rated voltage from being exceeded by transient disturbance voltage of more than 119 V.

10.1.6 UL approval

UL certificate

Certificate number	E248953
Standards	UL61010-1
	UL61010-2-201
	CAN/CSA C22.2 No. 61010-1-12
	CAN/CSA C22.2 No. 61010-2-201:18
Labeling	
This information applies to the products named in the following certificate: UL certificate (ET 200SP HA) | SIOS (https://support.industry.siemens.com/cs/ww/en/view/109771539)	

Special conditions

- The device may only be used in areas with a pollution degree of no more than 2 according to EN 60664-1.
- The appliance is only suitable for use in the environment of Class I, Division 2, Groups A, B, C, D and Class I, Zone 2, Group IIC.

10.1.7 UL HazLoc approval

Certificate number	E223122
Standards	UL 121201, 9th Ed.
	CSA C22.2 NO. 213-17, 3rd Ed.

Certificate number	**E223122**
Marking	
This information applies to the products named in the certificate: UL haz.loc. certificate (ET 200SP HA) | SIOS (https://support.industry.siemens.com/cs/ww/en/view/109798257)	

Special conditions

The UL-haz.loc. approval applies to:

- TERMINAL BLOCK, TYPE L0, LIGHT COLORED; TB45R-P16+4D (6DL1193-6TP00-0DL0)
- AI 4xI HART ISOL HA (6DL1134-6UD00-0PK0)
- AQ 4xI HART ISOL HA (6DL1135-6UD00-0PK0)
- F-DI 16xNAMUR HA (6DL1136-6TH00-0PH1)

Underwriters Laboratories Inc. fulfills the following standards:

- UL 60079-0 EXPLOSIVE ATMOSPHERES - PART 0: EQUIPMENT – GENERAL REQUIREMENTS – Edition 7 – Issue Date 2019/03/26
- UL 60079-7 STANDARD FOR EXPLOSIVE ATMOSPHERES – PART 7: EQUIPMENT PROTECTION BY INCREASED SAFETY "E" – Edition 5 – Revision Date 2017/04/21
- CSA C22.2 NO. 60079-0:19 EXPLOSIVE ATMOSPHERES – PART 0: EQUIPMENT – GENERAL REQUIREMENTS – Edition 4 – Issue Date 2019/02/01
- CSA C22.2 NO. 60079-7:16 EXPLOSIVE ATMOSPHERES – PART 7: Equipment Protection By Increased Safety "E" – Edition 2 – Issue Date 2016/10/01

Approved for use in
Class I, Division 2, Group A, B, C, D T4;

Class I, Zone 2, Group IIC T4

Class I Zone 2 AEx ec IIC T4 Gc

Ex ec IIC T4 Gc X

10.1.8 FM approval

FM certificate

Certificate number	**FM17US0271X**
	FM17CA0136X
Standards	FM Class 3600
	FM Class 3611
	FM Class 3810
	ANSI/UL 61010-1
	ANSI/UL 121201
	CSA C22.2 No. 0
	CSA-C22.2 No. 213
	CSA-C22.2 No. 61010-1
Classification	Class I, Div 2, Groups A, B, C, D T4
	NI, Class I, Zone 2, Groups IIC T4
Labeling	
This information applies to the products named in the following certificate: • FM17US0271X (ET 200SP HA) | SIOS (https://support.industry.siemens.com/cs/ww/en/view/109757063) • FM17CA0136X (ET 200SP HA) | SIOS (https://support.industry.siemens.com/cs/ww/en/view/109757065)	

10.1.9 ACMA approval

ACMA certificate

Certificate number	XY
Standards	EN 61000-6-4
Labeling	
This information applies to the products named in the following certificate: AUTOHOTSPOT	

10.1.10 Approval for Korea

Certificate number	**R-R-S49-ET200SPHAEX4**
Labeling	
This information applies to the products named in the following certificate: KC certificate (ET 200SP HA) | SIOS (https://support.industry.siemens.com/cs/ww/en/view/109802512)	

Special conditions

Note that this device corresponds to limit class A in terms of the emission of radio frequency interference. This device can be used in all areas, except residential areas.

이 기기는 업무용(A급) 전자파 적합기기로서 판매자 또는 사용자는 이 점을 주의하시기 바라며 가정 외의 지역에서 사용하는 것을 목적으로 합니다.

10.1.11 Approval for the Eurasian Customs Union

Certificate number	**xxxxxxxxxxxxxxxxxx**
Labeling	
This information applies to the products named in the following certificate: AUTOHOTSPOT	

10.2 Electromagnetic compatibility

Definition

The electromagnetic compatibility (EMC) is the ability of an electrical device to function in its electromagnetic environment without influencing this environment.

EMC requirements fulfilled

The ET 200SP HA distributed I/O system also fulfills the requirements of the EMC directive for the European domestic market.

Requirement
You must ensure that the configuration of the ET 200SP HA corresponds to the specifications and guidelines for electrical setup.

EMC in accordance with NE21

The ET 200SP HA distributed I/O system fulfills the EMC specifications according to NAMUR directive NE21.

Pulse-shaped disturbance variables

The following table shows the electromagnetic compatibility of the ET 200SP HA distributed IO system with pulse-shaped interference.

Table 10-1 Pulse-shaped disturbance variables

Disturbance variable	Tested with	Corresponds to degree of severity
Electrostatic discharge in accordance with IEC 61000-4-2	Air discharge: ±8 kV Contact discharge: ±6 kV	3 3
Burst pulses (fast transients) in accordance with IEC 61000-4-4 for the frequencies 5 kHz and 100 kHz	±2 kV (power supply line) ±4 kV (signal line)	4 4
High-energy single pulse (surge) in accordance with IEC 61000-4-5 Basic information about the external protective circuit, see the " Designing interference-free controllers (https://support.industry.siemens.com/cs/ww/en/view/59193566)" Function Manual.		
• Signals	±1 kV unbalanced (line to ground)	2
• Signals (with external protection)	±2 kV unbalanced (line to ground) ±1 kV balanced (line to line)	3
• Signals directly in AC network	±2 kV unbalanced (line to ground) ±1 kV balanced (line to line)	3
• DC supply	±1 kV unbalanced (line to ground) ±0.5 kV balanced (line to line)	2
• DC supply (with external protection)	±2 kV unbalanced (line to ground) ±1 kV balanced (line to line)	3

Sinusoidal disturbance variables

The following tables show the electromagnetic compatibility of the ET 200SP HA distributed I/O system to sinusoidal interference.

Table 10-2 HF radiation - sinusoidal interference

HF radiation according to IEC 61000-4-3/NAMUR NE21 **Electromagnetic RF field, amplitude-modulated**		**Corresponds to degree of severity**
80 MHz to 2.0 GHz	2.0 GHz to 6 GHz	3
10 V/m	3 V/m	
80% AM (1 kHz)		

Table 10-3 HF coupling - sinusoidal interference

RF coupling in accordance with IEC 61000-4-6	**Corresponds to degree of severity**
(10 kHz) 150 kHz to 80 MHz	3
10 V_{rms} unmodulated	
80% AM (1 kHz)	

Table 10-4 Magnetic field IEC 61000-4-8

Magnetic field according to IEC 61000-4-8	**Corresponds to degree of severity**
50/60 Hz 100 A/m	5
50/60 Hz 1 kA/m for 1 s	5

Table 10-5 Voltage with power engineering frequency (line frequency)

Test according to IEC 61000-4-16	**Corresponds to degree of severity**
10 V	3
100 V for 1 s	3

Table 10-6 Asymmetrical conducted interference

Inspection according to IEC 61000-4-16 and IEC 61000-4-18	**Corresponds to degree of severity**
• 10 V - 1 V (15 Hz – 150 Hz) • 1 V (150 Hz – 1.5 kHz) • 1 V – 10 V (1.5 kHz – 15 kHz) • 10 V (15 kHz – 150 kHz)	3

See the table "Conditions for the design of field wiring".

Table 10-7 Damped oscillatory waves

Inspection according to IEC 61000-4-16 and IEC 61000-4-18	Corresponds to degree of severity
Signals: • 1.0 kV (common mode, 1 MHz) • 0.5 kV (differential mode, 1 MHz)	2
DC supply: • 1.0 kV (common mode, 1 MHz) • 0.5 kV (differential mode, 1 MHz) • 0.5 kV (common mode, 10 MHz)	2

See the table "Conditions for the design of field wiring".

Components for lightning protection (lightning protection zone transition 0B to 1, 1 to 2 and 2 to 3)

You must use suitable surge protection devices as lightning protection measures.

Conditions for the design of field wiring

To fulfill these requirements, the field wiring for the I/O modules must be performed as stipulated in the following table.

Table 10-8 Field wiring for I/O modules according to IEC 61000-4-16 and IEC 61000-4-18

I/O module	Article number	Design of the field wiring
DI 16x24VDC HA	6DL1131-6BH00-0PH1	Unshielded/shielded
DI 16x24VDC NPN	6DL1131-6BH60-0PH1	Unshielded/shielded
DI 32x24VDC HA	6DL1131-6BL00-0PH1	Unshielded/shielded
DI 16xNAMUR HA	6DL1131-6TH00-0PH1	Shielded
F-DI 16x24VDC HA	6DL1136-6BA00-0PH1	Unshielded/shielded
F-DI16xNAMUR HA	6DL1136-6TH00-0PH1	Shielded
DI 8x24..125VDC HA	6DL1131-6DF00-0PK0	Unshielded/shielded
DI 8x230VAC HA	6DL1131-6GF00-0PK0	Unshielded/shielded
DQ 8x24VDC/2A	6DL1132-6BF20-0PK0	Unshielded/shielded
DQ 16x24VDC/0.5A HA	6DL1132-6BH00-0PH1	Unshielded/shielded
DQ 32x24VDC/0.5A HA	6DL1132-6BL00-0PH1	Unshielded/shielded
F-DQ 10x24VDC/2A PP HA	6DL1136-6DA00-0PH1	Unshielded/shielded
RQ 4x120VDC-230VAC/5A CO HA	6DL1132-6HD50-0PK0	Unshielded/shielded
AI-DI16/DQ16x24VDC HART HA	6DL1133-6EW00-0PH1	Shielded
AI 4xI HART ISOL HA	6DL1134-6UD00-0PK0	Shielded
AI 16xI 2-wire HART HA	6DL1134-6TH00-0PH1	Shielded
AI 16xTC/8xRTD 2-/3-/4-wire HA	6DL1134-6JH00-0PH1	Shielded

I/O module	Article number	Design of the field wiring
AQ 4xI HART ISOL HA	6DL1135-6UD00-0PK0	Shielded
AQ 8xI HART HA	6DL1135-6TF00-0PH1	Shielded
F-AI 8xI 2-/4-wire HART HA	6DL1136-6AA00-0PH1	Shielded
AI 8xU/I/TC/4xRTD 2-/3-/4-wire HA	6DL1134-6AF00-0PH1	Shielded
AI 16xI 2-wire HA	6DL1134-6GH00-0PH1	Shielded

Emission of radio frequency interference

- Emission of electromagnetic interference according to EN 61131-2.
- Interference emission via mains AC supply according to EN 61131-2

10.3 Shipping and storage conditions

Introduction

The ET 200SP HA distributed I/O system surpasses requirements for transport and storage conditions according to IEC 61131-2. The following information applies to modules that are shipped and/or stored in their original packaging.

Table 10-9 Shipping and storage conditions for modules

Type of condition	Permissible range
Free fall (in shipping package)	≤1 m
Temperature	From -40 °C to +70 °C
Air pressure [1)]	From 1080 hPa (corresponds to a depth of approx. -1000 m) Up to 606 hPa (corresponds to an elevation of approx. 4000 m)
Relative humidity	5% to 95%, without condensation
Sinusoidal oscillations according to IEC 60068-2-6	5 - 8.4 Hz: 3.5 mm 8.4 - 500 Hz: 9.8 m/s^2
Impact according to IEC 60068-2-27	250 m/s^2, 6 ms, 1000 shocks

1) Note that I/O modules with relay contacts are only suitable for an elevation up to 3000 m (corresponds to air pressure of around 690 hPa).

10.4 Mechanical and climatic environmental conditions

Operating conditions

The ET 200SP HA distributed I/O system is designed for stationary use in weather-proof locations. The operating conditions exceed requirements according to EN / IEC 60721-3-3:

- Class 3M3 (mechanical requirements)
- Class 3K3 (climatic requirements)

An enclosure is required:

Notes on the safe use of the ET 200SP HA (Page 45)

Use with additional measures

The described components may not be used without additional measures:

- At locations with a high degree of ionizing radiation
- In harsh operating environments caused, for example, by:
  - Accumulation of dust
  - Corrosive vapors or gases
  - Strong electrical or magnetic fields
- In installations requiring special monitoring, for example:
  - Elevator systems
  - Electrical systems in potentially hazardous areas

An additional measure, for example, can be installation in a cabinet or enclosure.

Mechanical ambient conditions

The following table shows the mechanical ambient conditions in the form of sinusoidal vibrations.

Frequency range in Hz	
$5 \leq f \leq 8.4$	Amplitude 3.5 mm
$8.4 \leq f \leq 150$	constant acceleration 9.8 m/s^2

Reduction of vibration

If the described components are subject to big shock or vibration, appropriate measures must be taken to reduce the acceleration or the amplitude.

We recommend mounting the described components on damping materials (rubber-metal anti-vibration mountings, for example).

Tests of mechanical ambient conditions

The following table provides important information with respect to the type and scope of the tests of mechanical ambient conditions.

Condition tested	Test standard	Comment
Vibration	Vibration test to EN / IEC 60068-2-6 (sine)	Type of vibration: • Frequency sweeps with a rate of change of 1 octave/minute. – 5 Hz ≤ f ≤ 8.4 Hz, constant amplitude 3.5 mm – 8.4 Hz ≤ f ≤ 150 Hz, constant acceleration 9.8 m/s^2 Duration of vibration: • 10 frequency sweeps per axis at each of three vertically aligned axes
Shock	Shock, tested to EN / IEC 60068-2-27	Type of shock: • Half-sine Shock intensity[1]: • Peak value 150 m/s^2 • Duration 11 ms Direction of shock: • 3 shocks in each direction (+/-) at each of three vertically aligned axes

[1] Note that I/O modules with relay contacts are tested and approved in accordance with the relay manufacturer's specifications. You can find further information in the documentation of I/O module with relay contacts.

Climatic ambient conditions

The following table shows the permissible climatic ambient conditions for the ET 200SP HA distributed I/O system.

Ambient conditions	Permissible range	Comments
Temperature	• Horizontal installation: from -40 °C to 70 °C • Vertical installation: from -40 °C to 60 °C Note: No icing	Observe any load-dependent limitations. Refer to the documentation of the employed component. Tested according to EN / IEC 60068-2-2 (Dry heat)
Air pressure	• From 1 080 hPa (corresponds to a depth of approximately -1 000 m) • Up to 606 hPa (corresponds to an elevation of approximately 4 000 m)	The density of the air decreases with increasing altitude. The cooling effect of air in accordance with the elevation is shown in the following table on derating.
Relative humidity	From 10 to 95% Max. 95% at +25 °C	Without condensation, corresponds to relative humidity (RH) stress grade 2 in accordance with EN / IEC 61131 part 2 Tested according to EN / IEC 60068-2-78 (Damp heat)

Ambient conditions	Permissible range	Comments
Concentration of pollutants	• SO_2: <0.5 ppm • RH: <60 %, no condensation • H_2S: <0.1 ppm • RH: <60 %, no condensation	Test: 10 ppm; 4 days Test: 1 ppm; 4 days
	ISA-S71.04 severity level G1; G2; G3	All PCBs have a protective coating.

Derating

The cooling effect of air decreases at higher altitudes as a result of its lower density.

The table shows the derating factor for the maximum permissible ambient temperature depending on the use of the devices at an elevation above sea level.

Elevation above sea level [1) 2)]	Derating factor for ambient temperature [3)]
(-1 000 m) up to 2 000 m	1.0
3 000 m	0.9
4 000 m	0.8

1) Please note that I/O modules with relay contacts are only suitable for an elevation up to 3 000 m.

2) Use in hazardous area Zone 2: only for elevations up to 2000 m.

3) Relating to the maximum permissible ambient temperature in °C for 2000 m.

Application of non-fail-safe modules

- **Effects on the module availability**
  - During operation at altitudes above 2000 m, the stronger cosmic radiation also affects the error rate of electronic components (referred to as soft error rate). In rare cases, this can result in a transition of the modules to the safe state, especially with fail-safe modules. However, the functional safety of the modules is fully maintained.
  - Up to 3000 m, fail-safe modules can be operated together with standard components.
  - Up to 4000 m, fail-safe modules can be operated together with standard components. $U_{rated} \leq 150$ V AC
- **Information on PFDavg and PFH values for fail-safe modules**
  You can find the module-specific information on PFDavg and PFH values in the fail-safe I/O module documentation.

10.5 Information on insulation, protection class, degree of protection and rated voltage

The information for the specific components takes precedence over the information in this documentation. The statements in the product information always have priority over all other information.

Insulation

The insulation is designed to fulfill the requirements of EN 61010-2-201 .

Location	Test
Backplane bus to supply voltage L+	1500 V DC/1 min, type test

Pollution severity/overvoltage category according to IEC 61010-2-201

- Pollution degree 2
- Overvoltage category: II

Protection class according to IEC 61010-2-201

The ET 200SP HA distributed I/O system fulfills Safety Class III. Safety classes I and II may apply to I/O modules. You can find additional information on this in the documentation of the I/O modules. The grounding of the rail must meet the requirements for functional grounding.

Recommendation:
To ensure interference-free installation, the cable for the functional grounding should have a cross-section > 6 mm^2.

The installation location (e.g. enclosure, control cabinet) must have a protective conductor connection that meets the standard to maintain protection class I.

Degree of protection IP20

IP20 degree of protection according to IEC 60529 for all modules of the distributed I/O system ET 200SP HA, i.e.:

- Protection against contact with standard probe
- Protection against foreign objects with diameters in excess of 12.5 mm
- No protection against water

Rated voltage for operation

The ET 200SP HA distributed I/O system works with the nominal voltage that is shown in the following table.

- Observe the tolerance range of the nominal voltage.
- When selecting the nominal voltage, note the maximum permissible supply voltage of each module.

Table 10-10 Rated voltage for operation

Rated voltage	Tolerance range
24 V DC	19.2 to 28.8 V DC [1]
	18 to 31.2 V DC [2]

[1] Static value: Creation as functional extra-low voltage with safe electrical isolation according to IEC 60364-4-41

[2] Dynamic value: Including ripple, e.g. as in the case of three-phase bridge power rectification

10.6 Technical specifications of subcomponents of the ET 200SP HA

10.6.1 Technical specifications for the modules

The technical specifications of the individual modules can be found in the manuals of the modules themselves. In the event of deviations between the statements in this document and the manuals, the statements in the manuals take priority.

10.6.2 Technical specifications - Carrier modules (TM)

Use

You can find information on this in section "Carrier module (Page 26)".

Carrier module IM (single)

A server module and a power bus cover are supplied for the interface module with every carrier module.

Article number	**6DL1193-6BH00-0SM0**
General information	
Product type designation	IM carrier module, single
Product function	
• I&M data	Yes; Asset data
Supply voltage	
Rated value (DC)	24 V
Hardware configuration	
Slots	
• Number of slots	1
Potential separation	
between backplane bus and supply voltage	Yes
Isolation	
Isolation tested with	1 500 V DC/1 min, type test
Ambient conditions	
Ambient temperature during operation	
• horizontal installation, min.	-40 °C
• horizontal installation, max.	70 °C
• vertical installation, min.	-40 °C
• vertical installation, max.	60 °C
Dimensions	
Width	100 mm
Height	204 mm
Depth	52 mm
Weights	
Weight, approx.	250 g

Article number	6DL1193-6BH01-0SM0
General information	
Product type designation	IM carrier module, single
Product function	
• I&M data	Yes; Asset data
Supply voltage	
Rated value (DC)	24 V
Hardware configuration	
Slots	
• Number of slots	1
Potential separation	
between backplane bus and supply voltage	Yes
Isolation	
Isolation tested with	1 500 V DC/1 min, type test
Ambient conditions	
Ambient temperature during operation	
• horizontal installation, min.	-40 °C
• horizontal installation, max.	70 °C
• vertical installation, min.	-40 °C
• vertical installation, max.	60 °C
Dimensions	
Width	100 mm
Height	141 mm
Depth	52 mm
Weights	
Weight, approx.	180 g

Carrier module IM (redundant)

A server module and a power bus cover are supplied for the interface module with every carrier module.

Article number	**6DL1193-6BH00-0RM0**
General information	
Product type designation	Carrier module IM redundant
Product function	
• I&M data	Yes; Asset data
Supply voltage	
Rated value (DC)	24 V
Potential separation	
between backplane bus and supply voltage	Yes
Isolation	
Isolation tested with	1 500 V DC/1 min, type test
Ambient conditions	
Ambient temperature during operation	
• horizontal installation, min.	-40 °C
• horizontal installation, max.	70 °C
• vertical installation, min.	-40 °C
• vertical installation, max.	60 °C
Dimensions	
Width	100 mm
Height	204 mm
Depth	52 mm

Article number	6DL1193-6BH01-0RM0
General information	
Product type designation	Carrier module IM redundant
Product function	
• I&M data	Yes; Asset data
Supply voltage	
Rated value (DC)	24 V
Hardware configuration	
Slots	
• Number of slots	2
Potential separation	
between backplane bus and supply voltage	Yes
Isolation	
Isolation tested with	1 500 V DC/1 min, type test
Ambient conditions	
Ambient temperature during operation	
• horizontal installation, min.	-40 °C
• horizontal installation, max.	70 °C
• vertical installation, min.	-40 °C
• vertical installation, max.	60 °C
Dimensions	
Width	100 mm
Height	141 mm
Depth	52 mm
Weights	
Weight, approx.	200 g

Carrier module 2x

Article number	6DL1193-6GA00-0NN0
General information	
Product type designation	Carrier module 2 times
Product function	
• I&M data	Yes; Asset data
Hardware configuration	
Formation of potential groups	
• support of potential groups	Yes
Slots	
• Number of slots	2
Potential separation	
between backplane bus and supply voltage	Yes; 4 200 V DC/1 min, type test
between the potential groups	Yes; 3 510 V AC/ 5 s, type test (between the power supply groups; due to isolating distance (increased isolation) for future ÜK-III requirement of F technology)
Isolation	
Isolation tested with	1 500 V DC/1 min, type test (between backplane bus and functional ground)
Ambient conditions	
Ambient temperature during operation	
• horizontal installation, min.	-40 °C
• horizontal installation, max.	70 °C
• vertical installation, min.	-40 °C
• vertical installation, max.	60 °C
Dimensions	
Width	52.5 mm; 45 mm when installed
Height	203 mm
Depth	79 mm
Weights	
Weight, approx.	111 g

Carrier module 8x

Article number	6DL1193-6GC00-0NN0
General information	
Product type designation	Carrier module 8 times
Product function	
• I&M data	Yes; Asset data
Hardware configuration	
Formation of potential groups	
• support of potential groups	Yes
Slots	
• Number of slots	8
Potential separation	
between backplane bus and supply voltage	Yes; 4 200 V DC/1 min, type test
between the potential groups	Yes; 3 510 V AC/ 5 s, type test (between the power supply groups; due to isolating distance (increased isolation) for future ÜK-III requirement of F technology)
Isolation	
Isolation tested with	1 500 V DC/1 min, type test (between backplane bus and functional ground)
Ambient conditions	
Ambient temperature during operation	
• horizontal installation, min.	-40 °C
• horizontal installation, max.	70 °C
• vertical installation, min.	-40 °C
• vertical installation, max.	60 °C
Dimensions	
Width	187.5 mm; 180 mm when installed
Height	203 mm
Depth	79 mm
Weights	
Weight, approx.	450 g

Carrier module 8x without power bus

Article number	6DL1193-6GC00-8NN0
General information	
Product type designation	carrier module 8x without power bus
Product function	
• I&M data	Yes; Asset data
Hardware configuration	
Formation of potential groups	
• support of potential groups	No; no Powerbus
Slots	
• Number of slots	8; for light gray and black terminal blocks
Potential separation	
between backplane bus and supply voltage	Yes; 4 200 V DC/1 min, type test
between the potential groups	Yes; 3 510 V AC/ 5 s, type test (between the power supply groups; due to isolating distance (increased isolation) for future ÜK-III requirement of F technology)
Isolation	
Isolation tested with	1 500 V DC/1 min, type test (between backplane bus and functional ground)
Ambient conditions	
Ambient temperature during operation	
• horizontal installation, min.	-40 °C
• horizontal installation, max.	70 °C
• vertical installation, min.	-40 °C
• vertical installation, max.	60 °C
Dimensions	
Width	187.5 mm; 180 mm when installed
Height	203 mm
Depth	79 mm
Weights	
Weight, approx.	270 g

10.6.3 Technical specifications - Terminal blocks

Terminal block, type H0, D-SUB; black

Article number	6DL1193-6TC00-0DH0
General information	
Product type designation	type H0, SUB-D
Product function	
• I&M data	Yes; Asset data
Supply voltage	
Rated value (DC)	24 V
external protection for power supply lines	Yes; 24 V DC / 10 A (MCB with tripping characteristic type B or C, quick-response device protection fuse with sufficient breaking capacity, electronic fuse with characteristic according to type B or C)
Current carrying capacity	
up to 70 °C, max.	10 A
For process terminals, max.	2 A
Hardware configuration	
Temperature sensor	No
Formation of potential groups	
• support of potential groups	No; no Powerbus
Slots	
• Number of slots	1
• Plug-in modules, analog I/O	Yes
• Plug-in modules, digital I/O	Yes
Analog inputs	
Thermocouple (TC)	
Temperature compensation	
– internal temperature compensation	No
Potential separation	
between backplane bus and supply voltage	Yes; 4 200 V DC/1 min, type test (due to half the isolating distance (basic isolation) for ÜK-III requirement of F technology)
between potential groups (power bus)	Yes; 1 200 V DC/1 min, type test (SELV / PELV to functional ground FE)
between process terminals and supply voltage	Yes; 1 200 V DC/1 min, type test
Ambient conditions	
Ambient temperature during operation	
• horizontal installation, min.	-40 °C
• horizontal installation, max.	70 °C
• vertical installation, min.	-40 °C
• vertical installation, max.	60 °C
Dimensions	
Width	22.5 mm

Article number	**6DL1193-6TC00-0DH0**
Height	175 mm
Depth	77 mm
Weights	
Weight, approx.	92 g

Terminal block type H1; light gray

Article number	6DL1193-6TP00-0DH1
General information	
Product type designation	Type H1
Product function	
• I&M data	Yes; Asset data
Supply voltage	
Rated value (DC)	24 V
external protection for power supply lines	Yes; 24 V DC / 10 A (MCB with tripping characteristic type B or C, quick-response device protection fuse with sufficient breaking capacity, electronic fuse with characteristic according to type B or C)
Current carrying capacity	
up to 70 °C, max.	10 A; Permitted load current of the potential group depending on the number of terminal blocks
For process terminals, max.	2 A
Hardware configuration	
Temperature sensor	Yes; For internal reference junction with connecting thermocouple
Formation of potential groups	
• support of potential groups	Yes
• New potential group	Yes
• Potential group continued from the left	No
Slots	
• Number of slots	1
• Plug-in modules, analog I/O	Yes
• Plug-in modules, digital I/O	Yes
Analog inputs	
Thermocouple (TC)	
Temperature compensation	
– internal temperature compensation	Yes
Potential separation	
between backplane bus and supply voltage	Yes; 4 200 V DC/1 min, type test
between process terminals and supply voltage	Yes; 1 500 V DC/1 min, type test
Ambient conditions	
Ambient temperature during operation	
• horizontal installation, min.	-40 °C
• horizontal installation, max.	70 °C
• vertical installation, min.	-40 °C
• vertical installation, max.	60 °C
Dimensions	
Width	22.5 mm
Height	175 mm
Depth	77 mm

Article number	**6DL1193-6TP00-0DH1**
Weights	
Weight, approx.	80 g

Terminal block type H1; dark gray

Article number	6DL1193-6TP00-0BH1
General information	
Product type designation	Type H1
Product function	
• I&M data	Yes; Asset data
Supply voltage	
Rated value (DC)	24 V
Current carrying capacity	
up to 70 °C, max.	10 A; Permitted load current of the potential group depending on the number of terminal blocks
For process terminals, max.	2 A
Hardware configuration	
Temperature sensor	Yes; For internal reference junction with connecting thermocouple
Formation of potential groups	
• support of potential groups	Yes
• New potential group	No
• Potential group continued from the left	Yes
Slots	
• Number of slots	1
• Plug-in modules, analog I/O	Yes
• Plug-in modules, digital I/O	Yes
Analog inputs	
Thermocouple (TC)	
Temperature compensation	
– internal temperature compensation	Yes
Potential separation	
between backplane bus and supply voltage	Yes; 4 200 V DC/1 min, type test
between process terminals and supply voltage	Yes; 1 500 V DC/1 min, type test
Ambient conditions	
Ambient temperature during operation	
• horizontal installation, min.	-40 °C
• horizontal installation, max.	70 °C
• vertical installation, min.	-40 °C
• vertical installation, max.	60 °C
Dimensions	
Width	22.5 mm
Height	175 mm
Depth	77 mm
Weights	
Weight, approx.	80 g

Terminal block type M1; light gray

Article number	6DL1193-6TP00-0DM1
General information	
Product type designation	Type M1
Product function	
• I&M data	Yes; Asset data
Supply voltage	
Rated value (DC)	24 V
external protection for power supply lines	Yes; 24 V DC / 10 A (MCB with tripping characteristic type B or C, quick-response device protection fuse with sufficient breaking capacity, electronic fuse with characteristic according to type B or C)
Current carrying capacity	
up to 70 °C, max.	10 A; Permitted load current of the potential group depending on the number of terminal blocks
For process terminals, max.	2 A
Hardware configuration	
Temperature sensor	Yes; For internal reference junction with connecting thermocouple
Formation of potential groups	
• support of potential groups	Yes
• New potential group	Yes
• Potential group continued from the left	No
Slots	
• Number of slots	2; For IO redundancy
• Plug-in modules, analog I/O	Yes
• Plug-in modules, digital I/O	Yes
Analog inputs	
Thermocouple (TC)	
Temperature compensation	
– internal temperature compensation	Yes
Potential separation	
between backplane bus and supply voltage	Yes; 4 200 V DC/1 min, type test
between process terminals and supply voltage	Yes; 1 500 V DC/1 min, type test
Ambient conditions	
Ambient temperature during operation	
• horizontal installation, min.	-40 °C
• horizontal installation, max.	70 °C
• vertical installation, min.	-40 °C
• vertical installation, max.	60 °C
Dimensions	
Width	45 mm
Height	175 mm
Depth	77 mm

Article number	6DL1193-6TP00-0DM1
Weights	
Weight, approx.	155 g

Terminal block type M1, IO-RED; dark gray

Article number	6DL1193-6TP00-0BM1
General information	
Product type designation	Type M1
Product function	
• I&M data	Yes; Asset data
Supply voltage	
Rated value (DC)	24 V
Current carrying capacity	
up to 70 °C, max.	10 A; Permitted load current of the potential group depending on the number of terminal blocks
For process terminals, max.	2 A
Hardware configuration	
Temperature sensor	Yes; For internal reference junction with connecting thermocouple
Formation of potential groups	
• support of potential groups	Yes
• New potential group	No
• Potential group continued from the left	Yes
Slots	
• Number of slots	2; For IO redundancy
• Plug-in modules, analog I/O	Yes
• Plug-in modules, digital I/O	Yes
Analog inputs	
Thermocouple (TC)	
Temperature compensation	
– internal temperature compensation	Yes
Potential separation	
between backplane bus and supply voltage	Yes; 4 200 V DC/1 min, type test
between process terminals and supply voltage	Yes; 1 500 V DC/1 min, type test
Ambient conditions	
Ambient temperature during operation	
• horizontal installation, min.	-40 °C
• horizontal installation, max.	70 °C
• vertical installation, min.	-40 °C
• vertical installation, max.	60 °C
Dimensions	
Width	45 mm
Height	175 mm
Depth	77 mm
Weights	
Weight, approx.	155 g

Terminal block type P0; light gray

Article number	6DL1193-6TP00-0DP0
General information	
Product type designation	Type P0
Product function	
• I&M data	Yes
Supply voltage	
Rated value (DC)	24 V
external protection for power supply lines	Yes; 24 V DC / 10 A (MCB with tripping characteristic type B or C, quick-response device protection fuse with sufficient breaking capacity, electronic fuse with characteristic according to type B or C)
Input current	
Current consumption, max.	640 mA; With one 20 mA encoder supply per channel
Encoder supply	
Number of outputs	32
Output voltage (DC)	24 V
24 V encoder supply	
• Short-circuit protection	Yes; Per output, thermal
• Output current, max.	20 mA; per output
• Output current per module, max.	640 mA
Current carrying capacity	
up to 70 °C, max.	10 A; Permitted load current of the potential group depending on the number of terminal blocks
For process terminals, max.	2 A
Hardware configuration	
Formation of potential groups	
• support of potential groups	Yes
• New potential group	Yes
• Potential group continued from the left	No
Slots	
• Number of slots	1
• Plug-in modules, analog I/O	Yes
• Plug-in modules, digital I/O	Yes
Potential separation	
between backplane bus and supply voltage	Yes; 4 200 V DC/1 min, type test
between process terminals and supply voltage	Yes; 1 500 V DC/1 min, type test
Ambient conditions	
Ambient temperature during operation	
• horizontal installation, min.	-40 °C
• horizontal installation, max.	70 °C
• vertical installation, min.	-40 °C
• vertical installation, max.	60 °C

Article number	6DL1193-6TP00-0DP0
Dimensions	
Width	45 mm
Height	175 mm
Depth	77 mm
Weights	
Weight, approx.	155 g

Terminal block type P0; dark gray

Article number	6DL1193-6TP00-0BP0
General information	
Product type designation	Type P0
Product function	
• I&M data	Yes
Supply voltage	
Rated value (DC)	24 V
Input current	
Current consumption, max.	640 mA; With one 20 mA encoder supply per channel
Encoder supply	
Number of outputs	32
Output voltage (DC)	24 V
24 V encoder supply	
• Short-circuit protection	Yes; Per output, thermal
• Output current, max.	20 mA; per output
• Output current per module, max.	640 mA
Current carrying capacity	
up to 70 °C, max.	10 A; Permitted load current of the potential group depending on the number of terminal blocks
For process terminals, max.	2 A
Hardware configuration	
Formation of potential groups	
• support of potential groups	Yes
• New potential group	No
• Potential group continued from the left	Yes
Slots	
• Number of slots	1
• Plug-in modules, analog I/O	Yes
• Plug-in modules, digital I/O	Yes
Potential separation	
between backplane bus and supply voltage	Yes; 4 200 V DC/1 min, type test
between process terminals and supply voltage	Yes; 1 500 V DC/1 min, type test
Ambient conditions	
Ambient temperature during operation	
• horizontal installation, min.	-40 °C
• horizontal installation, max.	70 °C
• vertical installation, min.	-40 °C
• vertical installation, max.	60 °C
Dimensions	
Width	45 mm
Height	175 mm
Depth	77 mm

Article number	**6DL1193-6TP00-0BP0**
Weights	
Weight, approx.	155 g

Terminal block type N0; light gray

Article number	6DL1193-6TP00-0DN0
General information	
Product type designation	Type N0
Product function	
• I&M data	Yes
Supply voltage	
Rated value (DC)	24 V
external protection for power supply lines	Yes; 24 V DC / 10 A (MCB with tripping characteristic type B or C, quick-response device protection fuse with sufficient breaking capacity, electronic fuse with characteristic according to type B or C)
Current carrying capacity	
up to 70 °C, max.	10 A; Permitted load current of the potential group depending on the number of terminal blocks
For process terminals, max.	2 A
Hardware configuration	
Formation of potential groups	
• support of potential groups	Yes
• New potential group	Yes
• Potential group continued from the left	No
Slots	
• Number of slots	1
• Plug-in modules, analog I/O	Yes
• Plug-in modules, digital I/O	Yes
Potential separation	
between backplane bus and supply voltage	Yes; 4 200 V DC/1 min, type test
between process terminals and supply voltage	Yes; 1 500 V DC/1 min, type test
Ambient conditions	
Ambient temperature during operation	
• horizontal installation, min.	-40 °C
• horizontal installation, max.	70 °C
• vertical installation, min.	-40 °C
• vertical installation, max.	60 °C
Dimensions	
Width	45 mm
Height	175 mm
Depth	77 mm
Weights	
Weight, approx.	155 g

Terminal block type N0; dark gray

Article number	6DL1193-6TP00-0BN0
General information	
Product type designation	Type N0
Product function	
• I&M data	Yes
Supply voltage	
Rated value (DC)	24 V
Current carrying capacity	
up to 70 °C, max.	10 A; Permitted load current of the potential group depending on the number of terminal blocks
For process terminals, max.	2 A
Hardware configuration	
Formation of potential groups	
• support of potential groups	Yes
• New potential group	No
• Potential group continued from the left	Yes
Slots	
• Number of slots	1
• Plug-in modules, analog I/O	Yes
• Plug-in modules, digital I/O	Yes
Potential separation	
between backplane bus and supply voltage	Yes; 4 200 V DC/1 min, type test
between process terminals and supply voltage	Yes; 1 500 V DC/1 min, type test
Ambient conditions	
Ambient temperature during operation	
• horizontal installation, min.	-40 °C
• horizontal installation, max.	70 °C
• vertical installation, min.	-40 °C
• vertical installation, max.	60 °C
Dimensions	
Width	45 mm
Height	175 mm
Depth	77 mm
Weights	
Weight, approx.	155 g

Terminal block type K0; light gray

Article number	6DL1193-6TP00-0DK0
General information	
Product type designation	Type K0
Product function	
• I&M data	Yes; Asset data
Supply voltage	
Rated value (DC)	24 V
external protection for power supply lines	Yes; 24 V DC / 10 A (MCB with tripping characteristic type B or C, quick-response device protection fuse with sufficient breaking capacity, electronic fuse with characteristic according to type B or C)
Current carrying capacity	
up to 70 °C, max.	10 A; Permitted load current of the potential group depending on the number of terminal blocks
For process terminals, max.	5 A
Hardware configuration	
Formation of potential groups	
• support of potential groups	Yes
• New potential group	Yes
• Potential group continued from the left	No
Slots	
• Number of slots	1
• Plug-in modules, analog I/O	Yes
• Plug-in modules, digital I/O	Yes
Potential separation	
between backplane bus and supply voltage	Yes; 4 200 V DC/1 min, type test
between process terminals and supply voltage	Yes; 4 200 V DC/1 min, type test
Ambient conditions	
Ambient temperature during operation	
• horizontal installation, min.	-40 °C
• horizontal installation, max.	70 °C
• vertical installation, min.	-40 °C
• vertical installation, max.	60 °C
Dimensions	
Width	22.5 mm
Height	175 mm
Depth	77 mm
Weights	
Weight, approx.	78 g

Terminal block type K0; dark gray

Article number	6DL1193-6TP00-0BK0
General information	
Product type designation	Type K0
Product function	
• I&M data	Yes; Asset data
Supply voltage	
Rated value (DC)	24 V
Current carrying capacity	
up to 70 °C, max.	10 A; Permitted load current of the potential group depending on the number of terminal blocks
For process terminals, max.	5 A
Hardware configuration	
Formation of potential groups	
• support of potential groups	Yes
• New potential group	No
• Potential group continued from the left	Yes
Slots	
• Number of slots	1
• Plug-in modules, analog I/O	Yes
• Plug-in modules, digital I/O	Yes
Potential separation	
between backplane bus and supply voltage	Yes; 4 200 V DC/1 min, type test
between process terminals and supply voltage	Yes; 4 200 V DC/1 min, type test
Ambient conditions	
Ambient temperature during operation	
• horizontal installation, min.	-40 °C
• horizontal installation, max.	70 °C
• vertical installation, min.	-40 °C
• vertical installation, max.	60 °C
Dimensions	
Width	22.5 mm
Height	175 mm
Depth	77 mm
Weights	
Weight, approx.	78 g

Terminal block type L0, IO-RED; light gray

Article number	6DL1193-6TP00-0DL0
General information	
Product type designation	type L0
Product function	
• I&M data	Yes; Asset data
Supply voltage	
Rated value (DC)	24 V
external protection for power supply lines	Yes; 24 V DC / 10 A (MCB with tripping characteristic type B or C, quick-response device protection fuse with sufficient breaking capacity, electronic fuse with characteristic according to type B or C)
Current carrying capacity	
up to 70 °C, max.	10 A; Permitted load current of the potential group depending on the number of terminal blocks
For process terminals, max.	5 A
Hardware configuration	
Formation of potential groups	
• support of potential groups	Yes
• New potential group	Yes
• Potential group continued from the left	No
Slots	
• Number of slots	2; For IO redundancy
• Plug-in modules, analog I/O	Yes
• Plug-in modules, digital I/O	Yes
Potential separation	
between backplane bus and supply voltage	Yes; 4 200 V DC/1 min, type test
between process terminals and supply voltage	Yes; 4 200 V DC/1 min, type test
Ambient conditions	
Ambient temperature during operation	
• horizontal installation, min.	-40 °C
• horizontal installation, max.	70 °C
• vertical installation, min.	-40 °C
• vertical installation, max.	60 °C
Dimensions	
Width	45 mm
Height	175 mm
Depth	77 mm
Weights	
Weight, approx.	148 g

Terminal block type F1, IO-RED; black

Article number	6DL1193-6TP00-0DF1
General information	
Product type designation	Type F1
Product function	
• I&M data	Yes; Asset data
Supply voltage	
Rated value (DC)	24 V
external protection for power supply lines	Yes; 24 V DC / 10 A (MCB with tripping characteristic type B or C, quick-response device protection fuse with sufficient breaking capacity, electronic fuse with characteristic according to type B or C)
Current carrying capacity	
For process terminals, max.	30 mA
Hardware configuration	
Automatic encoding	Yes
• Type of mechanical coding element	mechanical interlock
Temperature sensor	No
Formation of potential groups	
• support of potential groups	No; no Powerbus
Slots	
• Number of slots	2; For IO redundancy
• Plug-in modules, analog I/O	Yes; only F-AI 8xI 2-/4-wire HART HA
• Plug-in modules, digital I/O	No
Potential separation	
between backplane bus and supply voltage	Yes; 4 200 V DC/1 min (test value higher than normatively required)
between process terminals and supply voltage	Yes; 1 500 V DC/1 min (test value higher than normatively required)
Ambient conditions	
Ambient temperature during operation	
• horizontal installation, min.	-40 °C
• horizontal installation, max.	70 °C
• vertical installation, min.	-40 °C
• vertical installation, max.	60 °C
Dimensions	
Width	45 mm
Height	175 mm
Depth	77 mm
Weights	
Weight, approx.	160 g

Terminal block type M0, D-SUB, IO-RED; black

Article number	6DL1193-6TC00-0DM0
General information	
Product type designation	type M0, D-SUB, IO-RED
Product function	
• I&M data	Yes; Asset data
Supply voltage	
Rated value (DC)	24 V
external protection for power supply lines	Yes; 24 V DC / 10 A (MCB with tripping characteristic type B or C, quick-response device protection fuse with sufficient breaking capacity, electronic fuse with characteristic according to type B or C)
Current carrying capacity	
up to 70 °C, max.	10 A
For process terminals, max.	2 A
Hardware configuration	
Temperature sensor	No
Formation of potential groups	
• support of potential groups	No; no Powerbus
Slots	
• Number of slots	2; For IO redundancy
Analog inputs	
Thermocouple (TC)	
Temperature compensation	
– internal temperature compensation	No
Potential separation	
between backplane bus and supply voltage	Yes; 3 000 V DC/1 min, type test
between potential groups (power bus)	Yes; 1 200 V DC/1 min, type test (SELV / PELV to functional ground FE)
between process terminals and supply voltage	Yes; 1 200 V DC/1 min, type test
Ambient conditions	
Ambient temperature during operation	
• horizontal installation, min.	-40 °C
• horizontal installation, max.	70 °C
• vertical installation, min.	-40 °C
• vertical installation, max.	60 °C
Dimensions	
Width	45 mm
Height	175 mm
Depth	77 mm
Weights	
Weight, approx.	158 g

Terminal block type F0, D-SUB, F-AI, IO-RED; black

Article number	6DL1193-6TC00-0DF0
General information	
Product function	
• I&M data	Yes; Asset data
Supply voltage	
Rated value (DC)	24 V
external protection for power supply lines	Yes; 24 V DC / 10 A (MCB with tripping characteristic type B or C, quick-response device protection fuse with sufficient breaking capacity, electronic fuse with characteristic according to type B or C)
Current carrying capacity	
For process terminals, max.	30 mA
Hardware configuration	
Automatic encoding	Yes
• Type of mechanical coding element	mechanical interlock
Temperature sensor	No
Formation of potential groups	
• support of potential groups	No; no Powerbus
Slots	
• Number of slots	2; For IO redundancy
• Plug-in modules, analog I/O	Yes; only F-AI 8xI 2-/4-wire HART HA
• Plug-in modules, digital I/O	No
Analog inputs	
Thermocouple (TC)	
Temperature compensation	
– internal temperature compensation	No
Potential separation	
between backplane bus and supply voltage	Yes; 3 000 V DC/1 min, type test
between potential groups (power bus)	Yes; 1 200 V DC/1 min, type test (SELV / PELV to functional ground FE)
between process terminals and supply voltage	Yes; 1 200 V DC/1 min, type test
Ambient conditions	
Ambient temperature during operation	
• horizontal installation, min.	-40 °C
• horizontal installation, max.	70 °C
• vertical installation, min.	-40 °C
• vertical installation, max.	60 °C
Dimensions	
Width	45 mm
Height	175 mm
Depth	77 mm
Weights	
Weight, approx.	156 g

Terminal block type S0, D-SUB, ISOL; black

Article number	6DL1193-6TC00-0DS0
General information	
Product type designation	type S0, D-SUB, ISOL
Product function	
• I&M data	Yes; Asset data
Supply voltage	
Rated value (DC)	24 V
external protection for power supply lines	Yes; 24 V DC / 10 A (MCB with tripping characteristic type B or C, quick-response device protection fuse with sufficient breaking capacity, electronic fuse with characteristic according to type B or C)
Current carrying capacity	
up to 70 °C, max.	10 A
For process terminals, max.	2 A
Hardware configuration	
Temperature sensor	No
Formation of potential groups	
• support of potential groups	No; no Powerbus
Slots	
• Number of slots	1
Analog inputs	
Thermocouple (TC)	
Temperature compensation	
– internal temperature compensation	No
Potential separation	
between backplane bus and supply voltage	Yes; 3 000 V DC/1 min, type test
between potential groups (power bus)	Yes; 1 200 V DC/1 min, type test (SELV / PELV to functional ground FE)
between process terminals and supply voltage	Yes; 1 200 V DC/1 min, type test
Ambient conditions	
Ambient temperature during operation	
• horizontal installation, min.	-40 °C
• horizontal installation, max.	70 °C
• vertical installation, min.	-40 °C
• vertical installation, max.	60 °C
Dimensions	
Width	22.5 mm
Height	175 mm
Depth	77 mm
Weights	
Weight, approx.	92 g

Terminal block type R0, D-SUB, ISOL, IO-RED; black

Article number	**6DL1193-6TC00-0DR0**
General information	
Product type designation	type R0, D-SUB, ISOL, IO-RED
Product function	
• I&M data	Yes; Asset data
Supply voltage	
Rated value (DC)	24 V
external protection for power supply lines	Yes; 24 V DC / 10 A (MCB with tripping characteristic type B or C, quick-response device protection fuse with sufficient breaking capacity, electronic fuse with characteristic according to type B or C)
Current carrying capacity	
up to 70 °C, max.	10 A
For process terminals, max.	2 A
Hardware configuration	
Temperature sensor	No
Formation of potential groups	
• support of potential groups	No; no Powerbus
Slots	
• Number of slots	2; For IO redundancy
Analog inputs	
Thermocouple (TC)	
Temperature compensation	
– internal temperature compensation	No
Potential separation	
between backplane bus and supply voltage	Yes; 3 000 V DC/1 min, type test
between potential groups (power bus)	Yes; 1 200 V DC/1 min, type test (SELV / PELV to functional ground FE)
between process terminals and supply voltage	Yes; 1 200 V DC/1 min, type test
Ambient conditions	
Ambient temperature during operation	
• horizontal installation, min.	-40 °C
• horizontal installation, max.	70 °C
• vertical installation, min.	-40 °C
• vertical installation, max.	60 °C
Dimensions	
Width	45 mm
Height	175 mm
Depth	77 mm
Weights	
Weight, approx.	158 g

10.6.4 Technical specifications - Server module

Article number	6DL1193-6PA00-0AA0
General information	
Product type designation	Server module
Ambient conditions	
Ambient temperature during operation	
• min.	-40 °C
• max.	70 °C
Dimensions	
Width	7 mm
Height	117 mm
Depth	36 mm
Weights	
Weight, approx.	19 g

Dimension drawings

A

A.1 Dimension drawings of the rails

Rail 482.6 mm (19" rack)

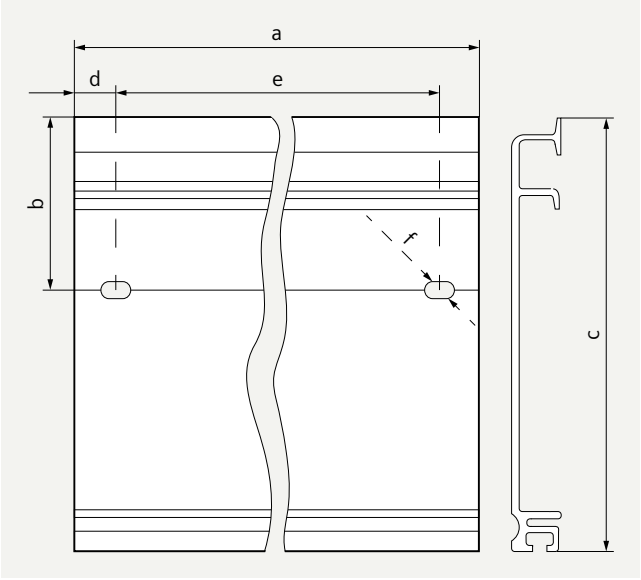

a	482.6 mm
b	65 mm
c	163 mm
d	8.3 mm
e	466 mm
f	10.2 mm

Rail 1500 mm

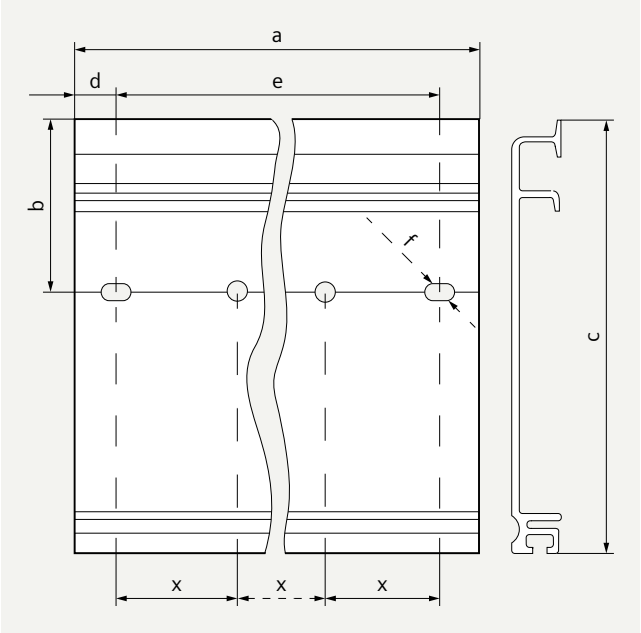

a 1500 mm
b 65 mm
c 163 mm
d 8.3 mm
e 466 mm
f 10.2 mm
x Recommended distance between 2 mounting points max. 500 mm

A.2 Shield connector

Dimensional diagram of the shield connector

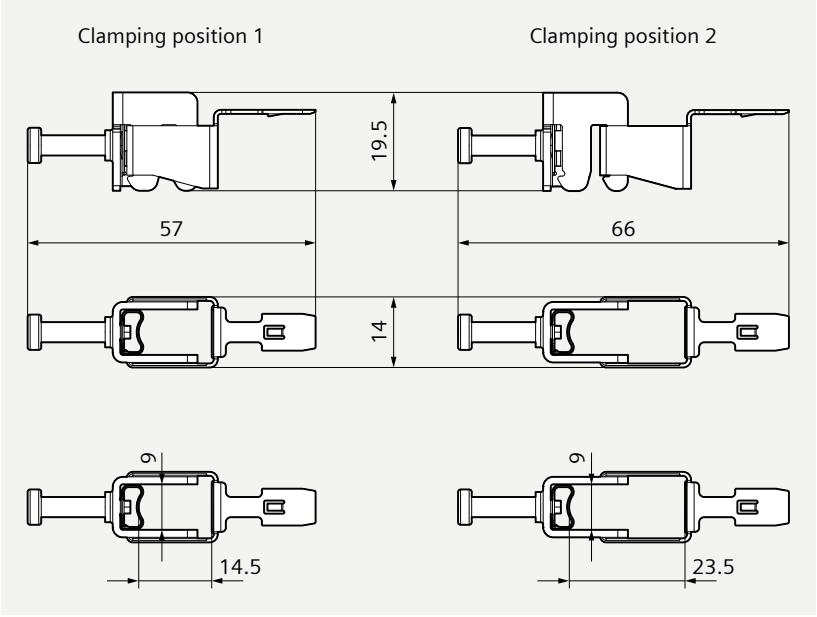

A.3 Labeling strip

Dimensional diagram of labeling strips and roll

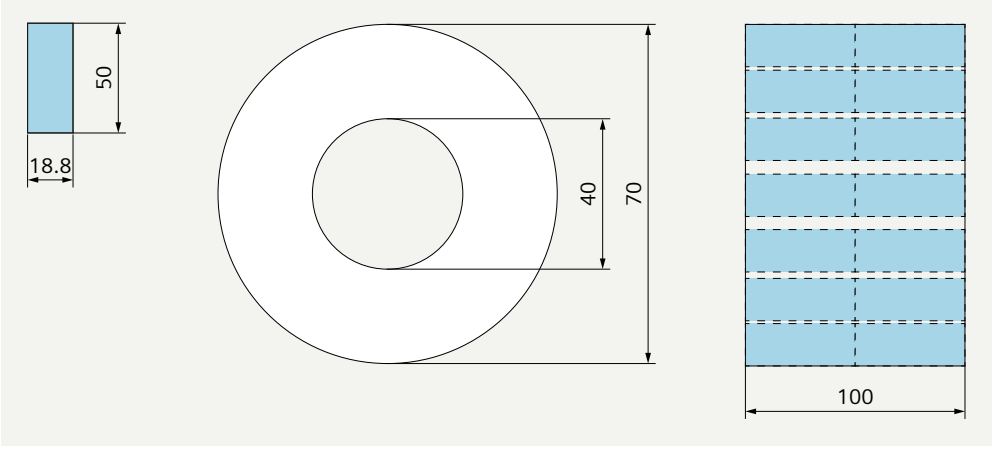

A.4 Reference identification labels

Dimensional diagram of reference identification label and sheet

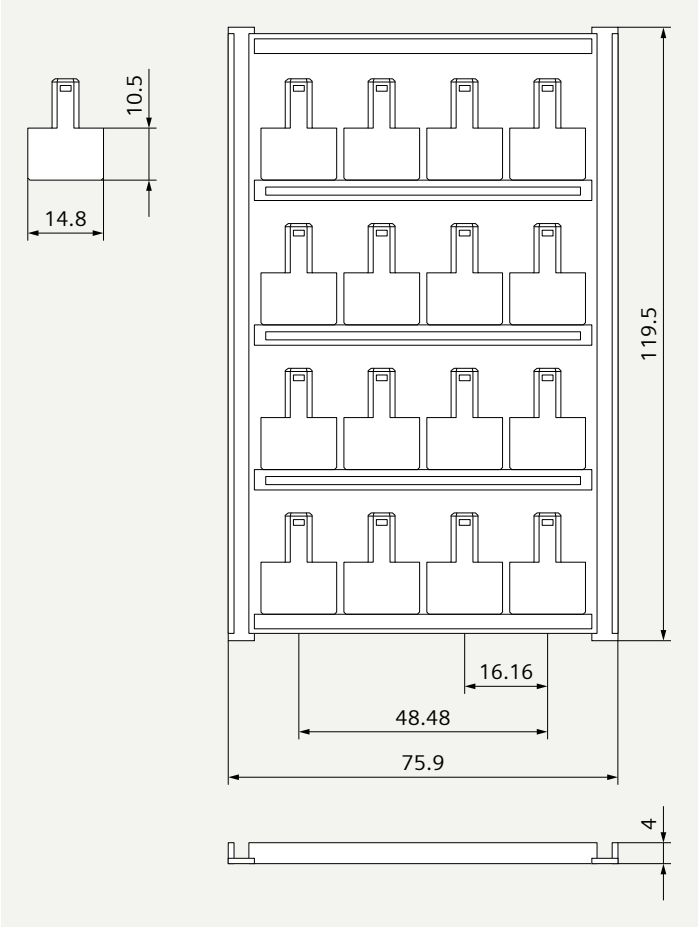

A.5 Color-coded labels

You can find information on the module-specific color identification label for an I/O module at the following locations:

- In the technical specifications of the I/O module in the line:
  Color code for module-specific color identification label
- Color code for selection of the color-coded labels

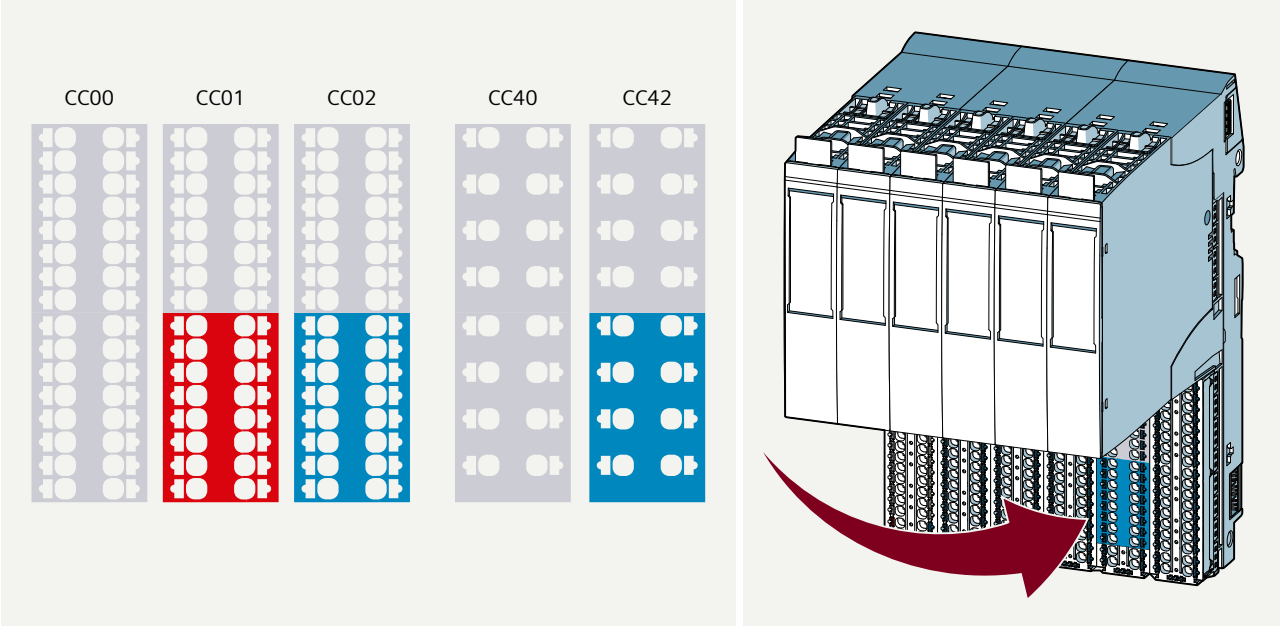

Figure A-1 Mounting the color identification plates and types (CC...)

Accessories/spare parts

B

Accessories for the distributed I/O system ET 200SP HA

Accessories section	Packing unit	Article number
Carrier module (for interface module - a server module and a power bus cover are supplied for the interface module with every carrier module.)	Single	6DL1193-6BH00-0SM0 6DL1193-6BH01-0SM0
	Redundant	6DL1193-6BH00-0RM0 6DL1193-6BH01-0RM0
Interface module	1 unit	6DL1155-6AU00-0PM0
Carrier module		
• Carrier module 2x	1 unit	6DL1193-6GA00-0NN0
• Carrier module 8x	1 unit	6DL1193-6GC00-0NN0
• Carrier module 8x (without power bus)	1 unit	6DL1193-6GC00-8NN0
Terminal blocks (see section "Selection of the terminal blocks: (Page 54)")		
BusAdapter		
• PROFINET BusAdapter with standard Ethernet socket (BA 2×RJ45)	1 unit	6DL1193-6AR00-0AA0
• PROFINET BusAdapter with Fast connect Ethernet connection (BA 2×FC)	1 unit	6DL1193-6AF00-0AA0
• PROFINET BusAdapter with fiber-optic cable connection (BA 2xLC)	1 unit	6DL1193-6AG00-0AA0
• PROFINET BusAdapter with glass fiber optic connection (BA LC/RJ45)	1 unit	6DL1193-6AG20-0AA0
• PROFINET BusAdapter with FastConnect Ethernet connection (BA LC/FC)	1 unit	6DL1193-6AG40-0AA0
• PROFINET BusAdapter for variable distances with standard Ethernet socket (BA 2×RJ45VD HA)	1 unit	6GK5991-2VA00-8AA2
Server module (spare part)	1 unit	6DL1193-6PA00-0AA0
Cover (slot covers)		
• IM cover (slot cover 50.0 mm wide - for interface module slots)	1 unit	6DL1133-6CV50-0AM0
• TM cover (slot cover 22.5 mm wide - for I/O module slots)	5 units	6DL1133-6CV22-0AM0
Shield connection for terminal block (shield contacts and shield terminals)	5 units	6ES7193-6SC20-1AM0
Reference identification label, white, sheet with 16 labels	10 units	6ES7193-6LF30-0AW0
Labeling strips (for labeling the I/O modules)		
• Roll, light gray (with a total of 500 labeling strips)	1 unit	6DL1193-6LR00-0AA0
• DIN A4 sheets, light gray (45 labeling strips per sheet)	10 units	6DL1193-6LA00-0AA0
• DIN A4 sheets, yellow (for F-I/O modules; 45 labeling strips per sheet)	10 units	6DL1193-6LA00-0AG0
Mounting rails, aluminum		
• Length: 483 mm (for 19" rack)	1 unit	6DL1193-6MC00-0AA0
• Length: 1500 mm (with maximum configuration; vertical in cabinet)	1 unit	6DL1193-6MD00-0AA0

Accessories, color-coded labels (push-in terminals)	Packing unit	Article number
Color code **CC00**; • **Gray** (terminals 1 to 32)	10 units	6DL1193-6CP00-2HH1
Color code **CC01** • **Gray** (terminals 1 to 16) • **Red** (terminals 17 to 32)	10 units	6DL1193-6CP01-2HH1
Color code **CC02** • **Gray** (terminals 1 to 16) • **Blue** (terminals 17 to 32)	10 units	6DL1193-6CP02-2HH1
Color code **CC40** • **Gray** (terminals 1 to 16)	10 units	6DL1193-6CP40-2HK0
• Color code **CC42** • **Gray** (terminals 1 to 8) • **Blue** (terminals 9 to 16)	10 units	6DL1193-6CP42-2HK0

Online catalog

You can find additional article numbers for the ET 200SP HA on the Internet (https://mall.industry.siemens.com/) in the online catalog and online ordering system.

See also

Designing interference-free controllers (https://support.industry.siemens.com/cs/ww/en/view/59193566)

Leakage resistance of the IO device

C

Introduction

If you want to protect the IO device with ground fault monitoring or an FI switch, you need the leakage resistance to select the correct safety component.

Ohmic resistance

You must consider the ohmic resistance from the RC combination of the respective module when determining the leakage resistance of the IO device:

Table C-1 Ohmic resistance

Module	Ohmic resistance from RC network
Interface module	10 MΩ [1]
Terminal block for feeding the supply voltage (light gray terminal block or black terminal block)	10 MΩ [1]

[1] Component tolerance 5%

Formula

If you protect all of the above modules with ground fault monitoring, you can calculate the leakage resistance of the IO device using the following formula:

$R_{ET200SPHA} = R_{module} / N$

$R_{ET200SPHA}$ = Leakage resistance of the ET 200SP HA

R_{module} = Leakage resistance of a module (see "Ohmic resistance" table)

N = Number of modules in the ET 200SP HA (interface modules and terminal block for supplying voltage only)

If you protect the modules listed above within an IO device with several ground fault monitors, you must determine the leakage resistance for every single ground fault monitor.

Example

The following components are in an IO device:

- An interface module
- Two potential groups with infeed of the supply voltage
- Various I/O modules

The complete IO device is secured with **one** ground fault monitor:

$$R_{ET\ 200SPHA} = \frac{9.5\ M\Omega}{3} = 3.17\ M\Omega$$

Cables

D

D.1 Connecting the cables

D.1.1 Connecting solid cables without ferrule

Requirement

- The supply voltages are turned off.
- Color-coded labels can be installed as an option.

Procedure

1. Strip the cables:
   - Ferrules for single cores: 8 to 10 mm
   - Twin ferrules: 12 to 14 mm
2. Insert the wire into the push-in terminal as far as it will go.

Result

The solid cables without ferrule are connected.

D.1.2 Connecting stranded cables with ferrule or ultrasonic compression

Requirement

- The supply voltages are turned off.
- Color-coded labels can be installed as an option.

Tools required

Suitable tool to prepare the cables.

Procedure

1. Strip the cables:
   – Ferrules for single cores: 8 to 10 mm
   – Twin ferrules: 12 to 14 mm
2. Seal or crimp the cable with wire end ferrules.
3. Insert the wire into the push-in terminal as far as it will go.

Result

The stranded cables with ferrule or ultrasonic compression are connected.

D.1.3 Connecting stranded cables without ferrule

Requirement

- The supply voltages are turned off.
- Color-coded labels can be installed as an option.

Tools required

3 to 3.5 mm screwdriver

Procedure

1. Strip the cables:
   – Ferrules for single cores: 8 to 10 mm
   – Twin ferrules: 12 to 14 mm
2. Press the screwdriver into the spring release.
3. Insert the wire into the push-in terminal as far as it will go.
4. Pull the screwdriver out of the spring release.

Result

The stranded cables without ferrule are connected.

D.2 Installing the shield contact

Requirement

- A terminal block is installed.
- The cable has a diameter of max. ∅ 7 mm each.

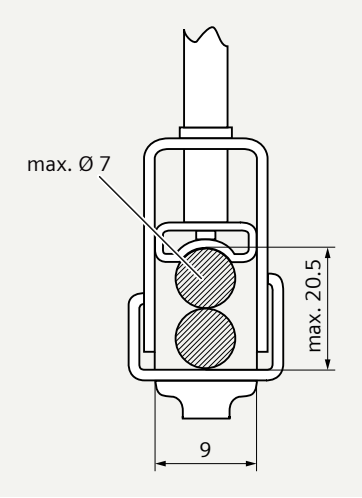

Tools required

- Stripping tool
- Flat-bladed screwdriver with 3.5 to 4.5 mm blade width or Torx T10

Procedure

1. If necessary, connect the supply voltage L+ and M on the terminal block.

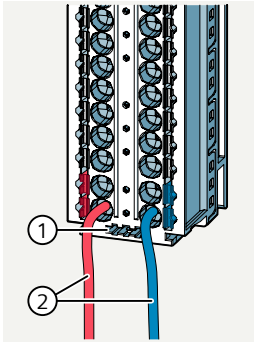

① Holder
② Supply voltage L+, M

2. Press the shield contact up into the holder until you hear it click into place.

Note

If you use a 7.5 mm mounting rail, you must shorten the support element beforehand. To do this, unscrew the spacer of the support element.

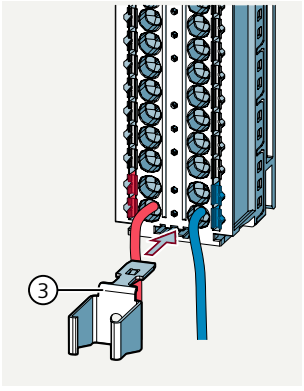

③ Shield contact

3. Remove the cable insulation material around the shield terminal.

4. Connect the cable to the terminal block and insert the cable into the shield contact.

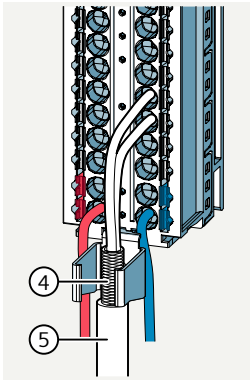

④ Cable with removed insulation material (approx. 20 mm)
⑤ Cable to sensor/actuator

5. Insert the shield terminal into the shield contact.

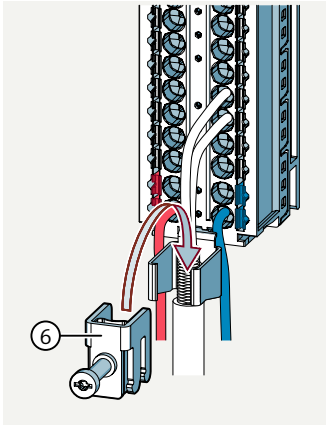

⑥ Shield terminal

6. Tighten the shield terminal with approximately 0.5 Nm until the terminal rests completely on the exposed braided shield.

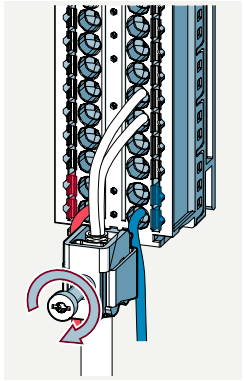

Note
Shield terminal does not have a zero clamping
Fix the shield terminal only at at least one inserted cable.

Result

The shield support is installed.

The cable shield is connected to the functional grounding.

Service & Support

E

Fastening/unfastening components

The components are maintenance-free.

Repairs on the components of the I/O system may only be made by the manufacturer.

Warranty

The warranty requires compliance with safety and commissioning information.

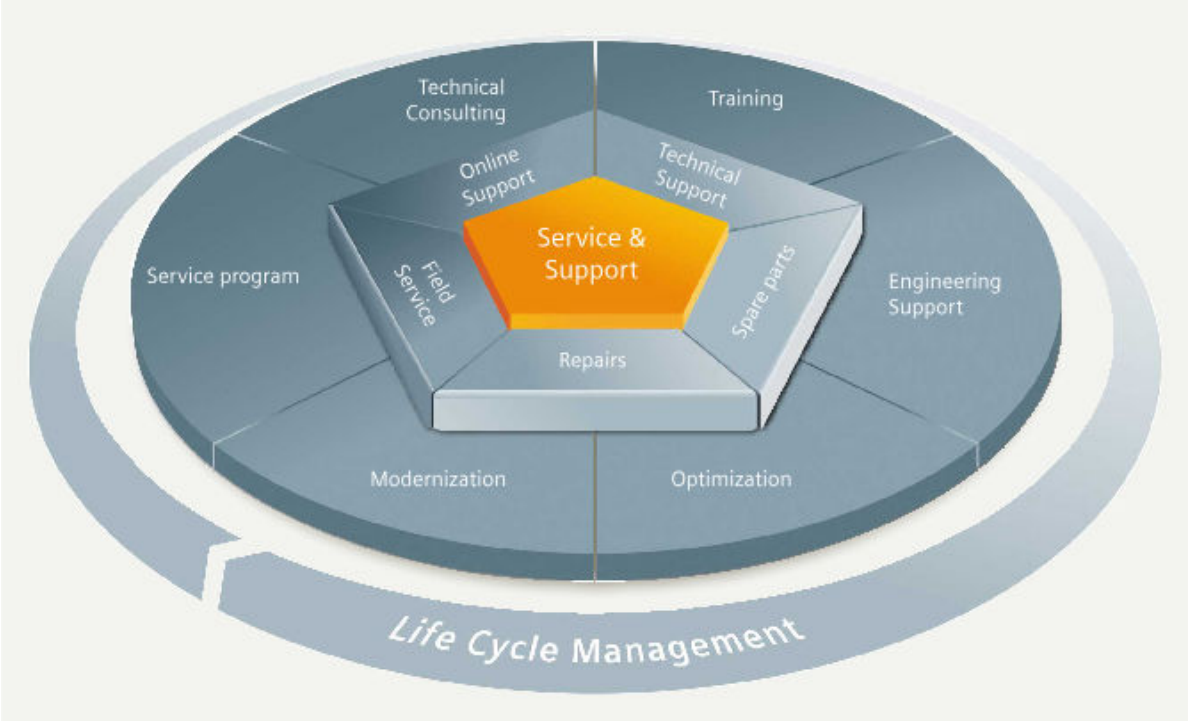

The unmatched complete service for the entire life cycle

For machine constructors, solution providers and plant operators: The service offering from Siemens Digital Industries includes comprehensive services for a wide range of different users in all sectors of the manufacturing and process industry.

To accompany our products and systems, we offer integrated and structured services that provide valuable support in every phase of the life cycle of your machine or plant – from planning and implementation through commissioning as far as maintenance and modernization.

Our Service & Support accompanies you worldwide in all matters concerning automation and drive technology from Siemens. We provide direct on-site support in more than 100 countries through all phases of the life cycle of your machines and plants.

You have an experienced team of specialists at your side to provide active support and bundled know-how. Regular training courses and intensive contact among our employees – even across continents – ensure reliable service in the most diverse areas

Online Support

The comprehensive online information platform supports you in all aspects of our Service & Support at any time and from any location in the world.

You can find Online Support at the following address Internet (https://support.industry.siemens.com/cs/ww/en/).

Technical Consulting

Support in planning and designing your project: From detailed actual-state analysis, definition of the goal and consultation on product and system questions right through to the creation of the automation solution.

Technical Support

Expert advice on technical questions with a wide range of demand-optimized services for all our products and systems.

You can find Technical Support at the following address: Internet (https://support.industry.siemens.com/cs/ww/en/my).

Training

Extend your competitive edge – through practical know-how directly from the manufacturer.

You can find the training courses we offer at the following address: Internet (https://www.sitrain-learning.siemens.com/).

Engineering Support

Support during project engineering and development with services fine-tuned to your requirements, from configuration through to implementation of an automation project.

Field Service

Our Field Service offers you services for commissioning and maintenance – to ensure that your machines and plants are always available.

Spare parts

In every sector worldwide, plants and systems are required to operate with constantly increasing reliability. We will provide you with the support you need to prevent a standstill from occurring in the first place: with a worldwide network and optimum logistics chains.

Repairs

Downtimes cause problems in the plant as well as unnecessary costs. We can help you to reduce both to a minimum – with our worldwide repair facilities.

Optimization

During the service life of machines and plants, there is often a great potential for increasing productivity or reducing costs.

To help you achieve this potential, we are offering a complete range of optimization services.

Modernization

You can also rely on our support when it comes to modernization – with comprehensive services from the planning phase all the way to commissioning.

Service programs

Our service programs are selected service packages for an automation and drives system or product group. The individual services are coordinated with each other to ensure smooth coverage of the entire life cycle and support optimum use of your products and systems.

The services of a Service Program can be flexibly adapted at any time and used separately.

Examples of service programs:

- Service contracts
- Plant IT Security Services
- Life Cycle Services for Drive Engineering
- SINUMERIK Manufacturing Excellence
- SIMATIC Remote Support Services

Advantages at a glance:

- Reduced downtimes for increased productivity
- Optimized maintenance costs due to a tailored scope of services
- Costs that can be calculated and therefore planned
- Service reliability due to guaranteed response times and spare part delivery times
- Customer service personnel will be supported and relieved of additional tasks
- Comprehensive service from a single source, fewer interfaces and greater expertise

Contact

At your service locally, around the globe: Your partner for consultation, sales, training, service, support, spare parts... for the entire range of products supplied by Digital Industries.

You can find your personal contact in our contacts database on the Internet (https://support.industry.siemens.com/aspa_app?lang=en).

E.1 Information and support

- Information about the technical support available can be found in the appendix to this documentation (https://support.industry.siemens.com/cs/ww/en/view/109742705).
- The technical documentation for the individual SIMATIC products and systems is available on the Internet (https://support.industry.siemens.com/cs/ww/en/view/109742100).
- The online catalog and the ordering system are available on the Internet (https://mall.industry.siemens.com).
- Contact details (https://support.industry.siemens.com/aspa_app?lang=en)

E.2 Mounting rules

Distances

Mounting and heat dissipation

- Fixing points on the rail:
  Maximum distance 500 mm - measured between the first and last fixing points
- Horizontal installation of the rail:
  - Distance above
  - Distance below
  - Distance left
  - Distance right

Fastening/unfastening components

Component	Fastening/unfastening	Tool	Tightening torque
Rail	Drill hole: Diameter 6.5 mm	TORX T15 screwdriver or 4.5 mm blade width	1.5 Nm
Connecting functional grounding to the rail	M6 screw. M6 nut and bolts	Size 10 adjustable screw-wrench or socket wrench	4 Nm
IM carrier module	Screws are located in the IM carrier module	TORX T15 screwdriver or 4.5 mm blade width	1.5 Nm

Component	Fastening/unfastening	Tool	Tightening torque
Carrier module (slots for I/O modules)	Screw is located in the carrier module Note: 4 fixing screws on the carrier module 8x	TORX T15 screwdriver or 4.5 mm blade width	1.5 Nm
Terminal block	Pluggable / pry with a screwdriver (see section "Removing a terminal block (Page 129)")	None	None
Interface module	Latching/releasing with a screwdriver (see section "Removing the interface module (Page 134)")	Screwdriver 4.5 mm blade width	None
I/O module	Latching/releasing buttons	None	None
BusAdapter	Screw is located in the BusAdapter	TORX T10 screwdriver or 3.5 mm blade width	0.25 Nm
Server module	Click mounting	None	None
Power bus cover	Click mounting	None	None
Wires on the terminal block (see section "Cable cross-sections and ferrules (Page 239)")	Spring release (see section "Notes on wiring of the terminal block (Page 113)")	Screwdriver with 3.5 to 4.5 mm blade width	None
Shield connection for process cable in the terminal block (shield terminal)	Screw is located in the shield terminal Note: Cables with max. ∅ 7 mm each	Screwdriver with 3.5 to 4.5 mm blade width	0.5 Nm
Fasten D-SUB connector to D-Sub terminal block	Screw is located in the D-SUB connector	Plug-specific	0.4 Nm

E.3 Cable cross-sections and ferrules

Cables with and without ferrule

Rule for ...		Interface module (supply voltage)	Terminal blocks (push-in terminal)
Permitted cable cross-sections for solid cables		0.2 to 2.5 mm^2	
		AWG*: 24 to 13	
Permitted cable cross-sections for flexible cables	Without ferrule	0.2 to 2.5 mm^2	
		AWG*: 24 to 13	AWG*: 24 to 14
	With ferrule (with plastic sleeve)***	0.25 mm to 1.5 mm^{2**}	0.14 mm to 1.5 mm^2
		AWG*: 24 to 16	AWG*: 26 to 16
	With TWIN ferrule***	0.5 mm to 1 mm^2	0.5 to 0.75 mm^2 (see below)

Rule for ...	Interface module (supply voltage)	Terminal blocks (push-in terminal)
Stripped length of the cables	• Ferrules for single cores: 8 to 10 mm • Twin ferrules: 12 to 14 mm	
Wire end ferrules in accordance with DIN 46228 with plastic sleeve***	8 and 10 mm long	

* AWG: American Wire Gauge

** Ferrules without plastic sleeve: 0.25 to 2.5 mm^2/AWG: 24 to 13

*** See note on ferrules

Note

Ferrules

You can achieve optimal results with respect to a high-quality and durable electrical connection and maximum conductor extraction forces at the same time by using crimping dies preferably with smooth surfaces. Options include rectangular and trapezoidal crimping cross-sections.

Due to the large number of crimping dies used in the industry, we can recommend others on request. **Crimping dies with a pronounced wave profile are not permitted in ET 200SP HA.**

Glossary

1oo1 evaluation

Type of the → sensor evaluation

With 1oo1 evaluation, the → sensor exists once and is connected to the F-module via a single channel.

1oo2 evaluation

Type of the → sensor evaluation

With 1oo2 evaluation, two input channels are occupied by one two-channel sensor or two single-channel sensors. The input signals are compared internally for equivalence or non-equivalence.

Actuator

Actuators can be power relays or contactors for switching on loads, or they can be loads themselves (e.g. directly controlled solenoid valves).
Actuators convert electric signals into other physical quantities (for example, into temperature or movement).

AR (Application Relationship)

Application relationship - association between an IO device and an IO controller

Automation system

Programmable logic controller for the open-loop and closed-loop control of process sequences of the process engineering industry and manufacturing technology. The automation system consists of different components and integrated system functions depending on the automation task.

Availability

Availability is the probability that a system is functional at a specific point in time. Availability can be increased by redundancy, e.g., by using multiple -> sensors at the same measuring point.

Bus

Joint transmission path to which all participants of a fieldbus system are connected; has two defined ends.

BusAdapter

Enables free selection of the connection technology for the PROFINET fieldbus.

Carrier module

Basic module that is required to establish the distributed I/O based on the ET 200SP HA. Carrier modules connect the plugged modules (interface modules or I/O modules) to the backplane bus.

- Carrier module for interface module: slot for the IM.
- Carrier module for I/O modules: make slots available for I/O modules with plugged terminal blocks.
  - Terminal block, light gray
  - Terminal block, dark gray
- Carrier module without power bus: An automatic installation of potential groups is not possible independent of the inserted terminal block.

Channel fault

Channel-specific fault, such as a wire break or short circuit.

Channel group

Channels of a IO module are grouped together in a channel group. Some parameters can only be assigned to channel groups and not individual channels.

Channel number

The inputs and outputs of an I/O module are uniquely identified via the channel numbers and assigned channel-specific diagnostics alarms.

Configuration

Systematic arrangement of the individual modules.

Configuration control

Function that enables flexible adaptation of the actual configuration based on a defined maximum configuration via the user program. Input, output and diagnostics addresses remain unchanged.

Connecting to common potential

Setting up a new potential group with separate supply voltage.

Connector

Physical connection between device and cable.

Coupling type

NAP (Network Access Point) is a communication connection within IEC 61158-6-10 V2.3.

- **S1:** IO device to an IO controller
  Singular interface module without system redundancy
- **S2:** IO device to redundant IO controller
  IO device connected singular interface module via system redundancy on the redundant IO controller.
- **R1:** Redundant IO device to a redundant IO controller
  IO device with redundant interface module connected to redundant IO controller via system redundancy.

The coupling type differentiates between the configurations according to use of the IO device.

Note: Ring structures with MRP (Media Redundancy Protocol) can be built regardless of the type of coupling.

Crimping

Procedure in which two components, e.g. ferrule and cable, are connected with each other by plastic strain.

Dark period

Dark periods occur during shutdown tests and complete bit pattern tests. The fail-safe output module switches test-related zero signals to the active output. This output is then briefly disabled (= "dark period"). An adequate carrier → actuator will not respond to this and will remain activated.

Derating

Adjustment of the permissible ambient temperature depending on the air pressure (usually corresponds to a specific geographical installation position - elevation above sea level).

Device name

Before an IO device can be addressed by an IO controller, it must have a device name.
An IO device is delivered without a device name. An IO device can only be addressed by the IO controller after it has been assigned a device name via the PG/PC or via the topology, e.g. for the transfer of configuration data (such as IP address) during startup or for the exchange of user data during cyclic operation.

Diagnostics

Monitoring functions for the recognition, localization, classification, display and further evaluation of errors, faults and messages. They run automatically during plant operation. This increases the availability of plants because commissioning times and downtimes are reduced.

Discrepancy analysis

The discrepancy analysis for equivalence/non-equivalence is used for fail-safe inputs to infer errors from the time sequence of two signals of the same functionality. The discrepancy analysis is started when different levels are detected for two associated input signals (when testing for non-equivalence: the same level). On expiration of a configurable time interval, i.e. the so-called → discrepancy time, a check is made to determine whether the difference in the signal levels has disappeared (when testing for non-equivalence: the equivalence of the signal levels).

If not, there is a discrepancy error. The discrepancy analysis is performed between the two input signals of the 1oo2 sensor evaluation in the fail-safe input module.

Discrepancy time

Parameterizable time for the → discrepancy analysis. If the discrepancy time is set too high, the error detection time and → the error reaction time are needlessly extended. If the discrepancy time is set too low, the availability is needlessly reduced because a discrepancy error is detected without any actual error being present.

Distributed I/O system

System with input and output modules that are configured on a distributed basis, far away from the CPU controlling them.

DP

→ *Distributed I/O system*

Earth

Conductive earth whose electrical potential can be set equal to zero at any point.

Equipotential bonding

Electrical connection (potential equalization conductor) that brings the bodies of electrical equipment and other conductive bodies to the same or almost the same potential, in order to prevent disruptive or dangerous voltages between these bodies.

Error reaction time

The maximum error reaction time for an F-system indicates the time from the occurrence of any error until the safe reaction at all affected fail-safe outputs.

- For → F-system overall:
  The maximum error reaction time indicates the time from the occurrence of any error of any → F-I/O until the safe reaction at the associated fail-safe output.
- For digital inputs:
  The maximum error reaction time indicates the time from the occurrence of the error until the safe reaction at the backplane bus.
- For digital outputs:
  The maximum error reaction time indicates the time from the occurrence of the error until the safe reaction at the digital output.

Fail-safe modules

Modules with integrated safety functions that can be used for safety-oriented operation (safety mode).

Fail-safe systems

Fail-safe systems (F-systems) are characterized by the fact that they remain in the safe state during the occurrence of specific failures or immediately transition into a different safe state.

F-CPU

An F-CPU is an F-capable central processing module that is approved for use in SIMATIC S7 F/FH systems. In addition, a → standard user program can run in the F-CPU.

F-I/O

Collective term for fail-safe inputs and outputs which are available in SIMATIC S7 for integration into the F-System SIMATIC S7 F/FH Systems.

Firmware update

Upgrade of firmware for modules (interface modules, I/O modules etc.), e.g. after function extensions, to the newest firmware version (update).

F-monitoring time

→ PROFIsafe monitoring time

F-systems

→ Fail-safe systems

Functional earth (FE)

Functional earth is a low-impedance current path between electric circuits and ground. It is not designed as a safety measure but instead, for example, as a measure to improve interference immunity.

Ground

All interconnected, inactive parts of a piece of equipment that cannot accept any dangerous contact voltage, even in the event of a fault.

Grounding

Grounding means connecting an electrically conductive part to a grounding electrode by means of a grounding system.

GSD file

As a Generic Station Description, this file contains all properties of a PROFINET device that are necessary for its configuration in XML format.

I/O modules

All modules that can be operated with a CPU or an interface module.

Identification data

Information that is saved in modules and that supports the user in checking the plant configuration and locating hardware changes.

Interface module

Module in the distributed IO system. The interface module connects the distributed I/O system via a fieldbus with the CPU (IO controller) and prepares the data for or from the I/O modules.

Line

All the modules attached to a rail.

Load current supply

Supply of modules like the interface module, power supply modules, I/O modules, and (if applicable) sensors and actuators.

MAC address

Device identification unique worldwide, which is already assigned to each PROFINET device in the factory. Its 6 bytes are divided into 3 bytes for the manufacturer ID and 3 bytes for the device ID (serial number). The MAC address is usually legible on the device.

Module fault

Module faults can be external faults (e.g. missing load voltage) or internal faults (e.g. processor failure). Internal faults always require module replacement.

Node

Device that can send, receive or amplify data via the bus, e.g. IO device via PROFINET IO.

NTP

The Network Time Protocol (NTP) is a standard for synchronizing clocks in automation systems via Industrial Ethernet. NTP uses the UDP wireless network protocol.

Parameter assignment

Parameter assignment is the transfer of parameters from the IO controller/DP master to the IO device/DP slave.

Passivation

If an → F-I/O detects an error, it switches the affected channel or all channels to the → safe state; this means the channels of the F-I/O are passivated. The F-I/O signals the detected error to the → F-CPU.

For an F-I/O with inputs, substitute values are provided for the → safety program by the → F-system in case of passivation instead of the process values pending at the fail-safe inputs.

For an F-I/O with outputs, substitute values (0) are transferred to the fail-safe outputs by the F-system in case of passivation instead of the output values provided by the safety program.

PELV

Protective **E**xtra **L**ow **V**oltage

Performance Level

Performance Level (PL) according to ISO 13849-1:2006 or EN ISO 13849-1:2008

Potential group

Group of I/O modules that are jointly supplied with voltage.

Prewiring

Wiring the electrics on a rail before the I/O modules are connected.

Process image (I/O)

The CPU transfers the values from the input and output modules to this memory area. At the start of the cyclic program, the signal states of the input modules are transmitted to the process image input. At the end of the cyclic program, the process image output is transmitted as signal state to the output modules.

Process safety time

The process safety time of a process is the time interval during which the process can be left unattended without harming the operating personnel or the environment.

During the process safety time, the process can control the controlling → F-system as needed, that is, even incorrectly or not at all. The process safety time depends on the type of process and must be determined individually for each process.

Product version (ES) = Functional status (FS)

The product version or functional status provides information on the hardware version of the module.

PROFIBUS

PROcess FIeld BUS, process and fieldbus standard that is specified in IEC 61158 Type 3. It specifies functional, electrical and mechanical properties for a bit-serial fieldbus system. PROFIBUS is available with the following protocols: DP (= Distributed Periphery), FMS (= Fieldbus Message Specification), PA (= Process Automation) or TF (= Technological Functions).

PROFINET

PROcess FIeld NETwork, open industrial Ethernet standard which continues PROFIBUS and Industrial Ethernet. A cross-manufacturer communication, automation and engineering model by PROFIBUS International e.V., defined as an automation standard.

PROFINET IO controller

Device used to address connected I/O devices. This means: The IO controller exchanges input and output signals with assigned I/O devices. The CPU is often IO controller.

PROFINET IO

Communication concept for the realization of modular, distributed applications within the scope of PROFINET.

PROFINET IO device

Distributed field device which may be associated with one or more IO controllers (e.g. distributed I/O system, valve terminals, frequency converters, switches).

PROFIsafe

Safety-oriented PROFINET IO bus profile for communication between the → safety program and the → F-I/O in an → F-system.

PROFIsafe address

The PROFIsafe address (code name according to IEC 61784-3-3: 2010) is used for securing standard addressing mechanisms, such as IP addresses. The PROFIsafe address consists of the F-source address and the F-destination address. Each → fail-safe module, therefore, has two address components, the F-source address, and the F-destination address.

You need to configure the PROFIsafe address in the hardware editor (HW Config).

PROFIsafe monitoring time

Monitoring time for safety-related communication between the F-CPU and F-I/O

Proof-test interval

Period after which a component must be forced to fail-safe state, that is, it is either replaced with an unused component or is proven faultless.

Provider-Consumer principle

Principle of data communication on the PROFINET IO: in contrast to PROFIBUS, both parties are independent providers when sending data.

Push-in terminal

Terminal for the tool-free connection of wires.

Redundancy, availability-enhancing

Multiple instances of components with the objective of maintaining component functionality in the event of hardware faults.

Reference identification

In accordance with EN 81346, a specific object is clearly referenced in relation to the system to whose components the object belongs. Thus, unique identification of the modules in the entire system is possible.

Reference potential

Potential from which the voltages of the participating circuits are considered and/or measured.

Safe state

The basis of the safety concept in F-systems is that a safe state exists for all process variables. For digital F-I/O, for example, this is the value "0".

Safety class

Safety Integrity Level (SIL) in accordance with IEC 61508:2010. The greater the Safety Integrity Level, the stronger the measures for preventing system errors as well as for control of system errors and hardware failures.

With the fail-safe modules, use up to safety class SIL3 is possible.

Safety function

Mechanism integrated in → F-CPU and → F-I/O, which enables use in the → fail-safe system SIMATIC S7 F/FH Systems.

In accordance with IEC 61508:2010: Function that is implemented by a safety relay to keep the system in the safe state in case of a specific error or to bring it into a safe state.

Safety message frame

In safety mode, the data between → F-CPU and → F-I/O is exchanged in a safety message frame.

Safety mode

Operating mode of → F-I/O in which → safety-related communication via → safety message frames is possible.

The → fail-safe modules are designed for safety mode only.

Safety program

Safety-oriented user program

Safety-related communication

Communication for the exchange of fail-safe data.

Self-assembling voltage buses

internal, self-assembling busbars that supply the I/O modules with voltage.

- P1 - L+ or supply voltage for the left-hand I/O module with IO redundancy (1P1)
- P2 - ground
- P3 - supply voltage for the right I/O module with IO redundancy (1P3)

SELV

Safety **E**xtra **L**ow **V**oltage

Sensor

Sensors are switches or sensors with and without transmitters.

Sensors convert physical variables (for example, temperature or movement) into electrical signals.

Sensor evaluation

We distinguish between two types of sensor evaluation:

- 1oo1 evaluation – sensor signal is read once
- 1oo2 evaluation – sensor signal is read twice by the same F-module and compared internally by the module

Sensors

Sensors are used for accurate detection of digital and analog signals as well as routes, positions, velocities, rotational speeds, masses, etc.

Server module

The server module completes the configuration of the distributed I/O.

Shared device

Shared Device is a function of an IO device. This function allows you to split submodules of an IO device between different IO controllers. Data from sensors in close proximity can be passed to different IO controllers.

With the Shared Device function, it is possible to create an IO device from fail-safe and standard modules and assign the individual modules to a fail-safe system or a standard system.

SIL (Safety Integrity Level)

Discrete level (one of three available) to determine the requirements for safety integrity of the safety-related control functions, whereby safety integrity level 3 represents the highest and safety integrity level 1 the lowest safety integrity level.

SIMATIC method

The SIMATIC method is a communication protocol developed by Siemens for synchronizing clocks in automation systems via Industrial Ethernet. The SIMATIC method uses a connectionless multicast protocol.

Mode:

- PCS 7-compatible mode
- S5-compatible mode

Slot cover

Cover for unused slots of the ET 200SP HA or placeholder for planned I/O modules. For a future expansion, the reference identification label of the planned I/O module can be kept here.

SNMP

SNMP (Simple Network Management Protocol) is the standardized protocol for diagnosing and also configuring the Ethernet infrastructure.

In the office area and in automation technology, devices support a wide range of manufacturers on the Ethernet SNMP.

SNMP-based applications can be operated on the same network in parallel to applications with PROFINET.

Switch

PROFINET is a line shaped network. The communication nodes are linked by means of a passive cable - the bus.

By contrast, Industrial Ethernet consists of point-to-point connections: each communication node is interconnected directly with precisely one other communication node.

If a communication node is linked to several communication nodes, this communication node is connected to the port of an active network component - the switch. Other communications devices (including switches) can then be connected to the other ports of the switch. The connection between a communication node and the switch remains a point-to-point connection.

The task of a switch is thus to regenerate and distribute received signals. The switch "learns" the Ethernet address(es) of a connected PROFINET device or additional switches and only forwards those signals that are intended for the connected PROFINET device or switch.

A switch has a specific number of connections (ports). You connect at most one PROFINET device or additional switch to each port.

Technology object

A technology object supports you in the configuration and commissioning of a technological function.

The properties of real objects are represented by the technology objects in the controller. Real objects can be, for example, controlled systems or drives.

The technology object includes all data of the real object that is required for its open-loop or closed-loop control, and it signals the status information.

TIA Portal

Totally Integrated Automation Portal

The TIA Portal is the key to the full performance capability of Totally Integrated Automation. The software optimizes all operating, machine and process sequences.

Transmission rate

The speed at which data is transferred. It indicates the number of bits transferred per second (transmission rate = bit rate).

TWIN ferrule

Ferrule for two cables

Value status

The value status is the binary additional information of a digital signal. The value status is entered in the process image of the input and provides information on the validity of the signal.

Index

2

2D matrix code, 17

E

EAN code, 17

Q

QR code, 17