SIEMENS

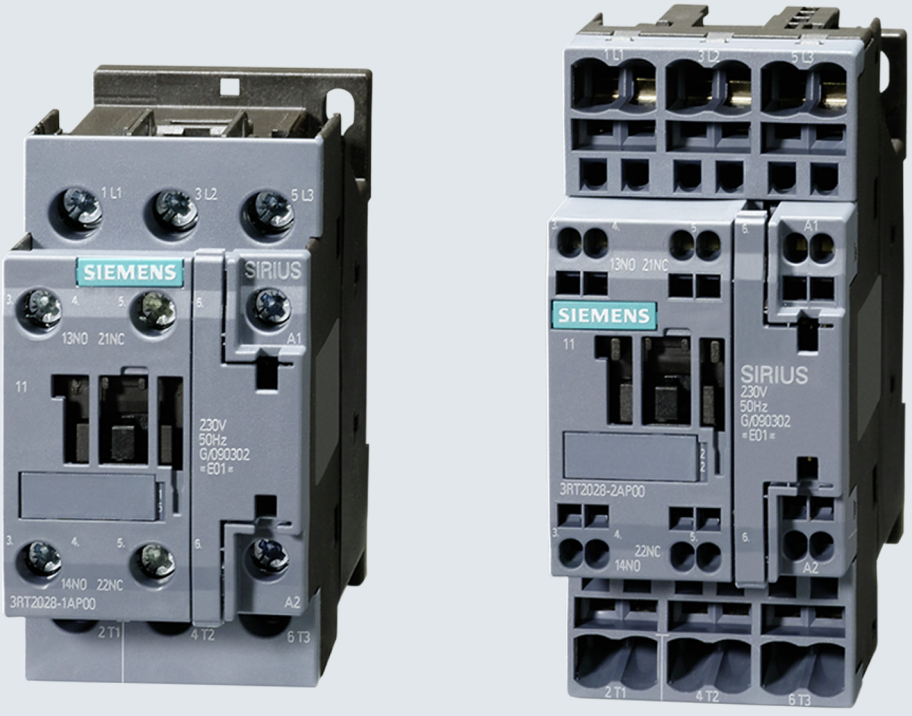

Industrial Controls

Switching Devices

SIRIUS - SIRIUS 3RT Contactors / Contactor assemblies

Manual

Edition 09/2016

siemens.com

SIEMENS

Industrial Controls

Switching devices
SIRIUS - SIRIUS 3RT
Contactors/Contactor assemblies

Manual

Introduction 1

Standards 2

Product description 3

Product combinations 4

Configuration 5

Mounting 6

Connection 7

Accessories 8

Technical data 9

Circuit diagrams 10

Types of coordination A

References B

Dimension drawings (dimensions in mm) C

09/2016

A5E03656507120A/RS-AC/004

Legal information

Warning notice system

This manual contains notices you have to observe in order to ensure your personal safety, as well as to prevent damage to property. The notices referring to your personal safety are highlighted in the manual by a safety alert symbol, notices referring only to property damage have no safety alert symbol. These notices shown below are graded according to the degree of danger.

⚠ DANGER

indicates that death or severe personal injury **will** result if proper precautions are not taken.

⚠ WARNING

indicates that death or severe personal injury **may** result if proper precautions are not taken.

⚠ CAUTION

indicates that minor personal injury can result if proper precautions are not taken.

NOTICE

indicates that property damage can result if proper precautions are not taken.

If more than one degree of danger is present, the warning notice representing the highest degree of danger will be used. A notice warning of injury to persons with a safety alert symbol may also include a warning relating to property damage.

Qualified Personnel

The product/system described in this documentation may be operated only by **personnel qualified** for the specific task in accordance with the relevant documentation, in particular its warning notices and safety instructions. Qualified personnel are those who, based on their training and experience, are capable of identifying risks and avoiding potential hazards when working with these products/systems.

Proper use of Siemens products

Note the following:

⚠ WARNING

Siemens products may only be used for the applications described in the catalog and in the relevant technical documentation. If products and components from other manufacturers are used, these must be recommended or approved by Siemens. Proper transport, storage, installation, assembly, commissioning, operation and maintenance are required to ensure that the products operate safely and without any problems. The permissible ambient conditions must be complied with. The information in the relevant documentation must be observed.

Trademarks

All names identified by ® are registered trademarks of Siemens AG. The remaining trademarks in this publication may be trademarks whose use by third parties for their own purposes could violate the rights of the owner.

Disclaimer of Liability

We have reviewed the contents of this publication to ensure consistency with the hardware and software described. Since variance cannot be precluded entirely, we cannot guarantee full consistency. However, the information in this publication is reviewed regularly and any necessary corrections are included in subsequent editions.

Siemens AG
Division Digital Factory
Postfach 48 48
90026 NÜRNBERG
GERMANY

3ZX1012-0RT20-5AC1
℗ 09/2016 Subject to change

Copyright © Siemens AG 2011.
All rights reserved

Table of contents

1 Introduction 13

1.1 Responsibility of the user for system configuration and functionality 13
1.2 Purpose of the manual 14
1.3 Advantages through energy efficiency 15
1.4 Required basic knowledge 15
1.5 Scope of the manual 15
1.6 Siemens Industry Online Support 16
1.7 Further documentation 17
1.8 DataMatrix code 18
1.9 Siemens Industry Online Support app 18
1.10 Recycling and disposal 19
1.11 Technical Assistance 19

2 Standards 21

2.1 Standards and product approvals 21
2.2 Protective separation 22
2.3 Positively driven contact elements/Mirror contacts 23
2.4 IE3 / IE4 ready 25
2.5 Applications 26

3 Product description 29

3.1 Overview of the contactor range 29
3.2 Device versions 33
3.2.1 3RT2 power contactors 34
3.2.2 3RT10 / 3RT14 power contactors and 3RT12 vacuum contactors 39
3.2.3 3RH2 contactor relays 45
3.2.4 3RT26 capacitor contactors 48
3.2.5 3RA23 reversing contactor assemblies 53
3.2.6 3RA24 contactor assemblies for star-delta (wye-delta) start 56
3.2.7 Drive options 60

4 Product combinations 61

5 Configuration 63

5.1 Overview of applications for contactors and contactor assemblies 63
5.2 SIRIUS system configurator 64
5.3 Operating mechanism system / coil selection 3RT contactors and 3RH2 contactor relays 65
5.3.1 Operating mechanism system / coil selection 3RT2 contactors and 3RH2 contactor relays 65
5.3.2 Operating mechanism system / coil selection 3RT1 contactors 66
5.3.2.1 Conventional and electronic operating mechanism types 66
5.3.2.2 Operating modes of electronic operating mechanism 70
5.3.2.3 Electronic operating mechanism with remaining lifetime signal 73
5.3.2.4 Typical circuit diagrams 77
5.3.2.5 Remaining lifetime signal (RLT) 78
5.4 Application environment 81
5.4.1 3RH2 contactor relays 81
5.4.2 3RT power contactors 82
5.4.3 Contactors for railway applications 85
5.4.4 Installation altitude 86
5.5 Switching motorized loads 87
5.6 Switching resistive loads 92
5.7 Changing the polarity of hoisting gear motors 95
5.8 Switching in the auxiliary circuit 97
5.9 Switching of capacitive loads 98
5.10 Contactors with extended operating range 105
5.10.1 Contactors for railway applications 105
5.10.1.1 Contactors for rail applications according to IEC 60077-2 105
5.10.1.2 Operating modes of electronic operating mechanism 107
5.10.2 Coupling relays 109
5.10.2.1 Technical background information 111
5.11 Operation of a motor in two directions of rotation (reversing contactor assembly) 112
5.11.1 Reference 118
5.12 Starting three-phase motors with reduced starting current peaks (contactor assembly for star-delta (wye-delta) start) 119
5.12.1 Reference 124
5.12.2 Technical background information 125
5.13 Using long control cables 130
5.14 Configuration information for use downstream of frequency converters 136
5.15 Contact service life of auxiliary and main contacts 138
5.15.1 3RT2 power contactors (sizes S00 to S3) 138
5.15.1.1 Contact service life of auxiliary and main contacts (sizes S00 and S0) 138
5.15.1.2 Contact service life of auxiliary and main contacts (size S2) 141
5.15.1.3 Contact service life of auxiliary and main contacts (size S3) 143
5.15.2 3RT26 capacitor contactors (sizes S00 to S2) 145
5.15.2.1 Contact service life of auxiliary and main contacts 145

5.15.3 3RT10 power contactors and 3RT12 vacuum contactors (sizes S6 to S12) 147
5.15.3.1 Mechanical endurance 147
5.15.3.2 Electrical endurance 147

6 Mounting 151

6.1 Mounting 151
6.1.1 Mounting options 151
6.1.2 Mounting position 152
6.1.3 Mounting on mounting plate / wall mounting 153
6.1.4 Snapping onto DIN rail (snap-on mounting) 156

6.2 Replacing solenoid coils 159
6.2.1 Replacing solenoid coils for size S0 159
6.2.2 Replacing solenoid coils for size S2 162
6.2.3 Replacing solenoid coils for size S3 167
6.2.4 Replacing solenoid coils for sizes S6-S12 173

6.3 Contact piece replacement (sizes S2 to S12) 176
6.3.1 Contact piece replacement (size S2) 176
6.3.2 Contact piece replacement (size S3) 182
6.3.3 Contact piece replacement (size S6) 188
6.3.4 Contact piece replacement (size S10 and S12) 190

6.4 Replacing the vacuum interrupters (sizes S10 and S12) 193

7 Connection 197

7.1 Conductor cross-sections 200
7.1.1 Conductor cross-sections for screw-type connection systems 200
7.1.2 Conductor cross-sections for spring-loaded connection systems 206
7.1.3 Conductor cross-sections for ring cable lug connection system 208

8 Accessories 211

8.1 Overview of accessories for 3RT2 contactors 211
8.1.1 Overview of accessories for 3RT2 contactors 211

8.2 Overview of accessories for 3RT1 contactors 221
8.2.1 Overview of accessories for 3RT1 contactors 221

8.3 Auxiliary switch blocks 223
8.3.1 Auxiliary switch block for 3RT2 power contactors and 3RH2 contactor relays 223
8.3.1.1 Description 223
8.3.1.2 Configuration 226
8.3.1.3 Selection guide for mountable auxiliary switch blocks for power contactors and contactor relays 232
8.3.1.4 Mounting/Disassembly 252
8.3.2 Auxiliary switch blocks for 3RT1 power contactors 255
8.3.2.1 Description 255
8.3.2.2 Configuration 258
8.3.2.3 Terminal designations and identification numbers for auxiliary contacts 260
8.3.2.4 Mounting/Disassembly 261

8.4 Surge suppressor 264
8.4.1 Description 264
8.4.2 Configuration 268
8.4.3 Mounting 276

8.5 EMC suppression module ... 282
8.5.1 Description ... 282
8.5.2 Configuration ... 284
8.5.3 Mounting ... 286
8.6 OFF-delay device ... 287
8.6.1 Description ... 287
8.6.2 Configuration ... 287
8.6.3 Mounting ... 288
8.7 Mechanical latch ... 290
8.7.1 Description ... 290
8.7.2 Mounting/Disassembly ... 291
8.7.3 Operation ... 293
8.8 Additional load module ... 294
8.8.1 Description ... 294
8.8.2 Mounting ... 294
8.9 Control kit for manual operation of contactor contacts ... 295
8.9.1 Description ... 295
8.9.2 Mounting ... 296
8.10 Coupling link for PLC ... 298
8.10.1 Description ... 298
8.10.2 Mounting the 3RH2924-1GP11 coupling link ... 301
8.10.3 Mounting and disassembling the 3RH2926-1AP1 coupling module ... 302
8.11 LED display indicator module ... 305
8.11.1 Description ... 305
8.11.2 Mounting ... 306
8.12 Solder pin adapter ... 307
8.12.1 Description ... 307
8.12.2 Mounting ... 308
8.13 Coil terminal module ... 310
8.13.1 Description ... 310
8.13.2 Mounting ... 311
8.14 Cover for ring cable lug ... 313
8.14.1 Description ... 313
8.15 Sealable cover ... 314
8.15.1 Description ... 314
8.15.2 Mounting ... 314
8.16 3-phase infeed terminal ... 315
8.16.1 Description ... 315
8.16.2 Mounting ... 315
8.17 1-phase infeed terminal ... 316
8.17.1 Description ... 316
8.17.2 Mounting ... 316
8.18 Parallel switching connectors ... 317
8.18.1 Description ... 317
8.18.2 Configuration ... 318
8.18.3 Mounting ... 320

8.19 Link module for two contactors in series 321
8.19.1 Description 321
8.19.2 Mounting 321

8.20 Link module for motor starter protector 323
8.20.1 Description 323

8.21 Pneumatically delayed auxiliary switch 324
8.21.1 Description 324
8.21.2 Mounting/Disassembly 325
8.21.3 Operation 326

8.22 Insulating stop 327
8.22.1 Description 327

8.23 Terminal module for contactors with screw connections 328
8.23.1 Description 328
8.23.2 Mounting 329

8.24 3RA27 function modules for connection to the automation level (AS-Interface or IO-Link) 330
8.24.1 Description 330

8.25 3RA28 function modules for mounting on 3RT2 contactors 331
8.25.1 Description 331

8.26 Assembly kit for reversing contactor assemblies (sizes S00 to S3) 333
8.26.1 Description 333
8.26.2 Mounting size S00 335
8.26.3 Mounting size S0 338
8.26.4 Mounting size S2 342
8.26.5 Mounting size S3 346

8.27 Wiring kit for reversing contactor assemblies (sizes S6 to S12) 351
8.27.1 Description 351
8.27.2 Mounting size S6 352
8.27.3 Mounting sizes S10 and S12 355

8.28 Assembly kit for contactor assemblies for star-delta (wye-delta) start (sizes S00 to S3) 357
8.28.1 Description 357
8.28.2 Mounting size S00 361
8.28.3 Mounting size S0 365
8.28.4 Mounting size S2 370
8.28.5 Mounting size S3 381

8.29 Wiring kit for contactor assemblies for star-delta (wye-delta) start (sizes S6 to S12). 393
8.29.1 Description 393
8.29.2 Mounting size S6 395
8.29.3 Mounting sizes S10 and S12 401

8.30 Terminal cover for cable lug connection and busbar connection 405
8.30.1 Description 405
8.30.2 Mounting 407

8.31 Terminal covers for box terminal block 416
8.31.1 Description 416
8.31.2 Mounting 416

8.32 Main current path surge attenuation module for vacuum contactors ... 417
8.32.1 Description ... 417
8.32.2 Mounting ... 418
8.33 Box terminal block (size S6 to S12) ... 420
8.33.1 Description ... 420
8.33.2 Mounting ... 421
8.34 Solid-state time-delay auxiliary switch blocks (size S6 to S12) ... 422
8.34.1 Description ... 422
8.34.2 Configuration ... 425
8.34.3 Mounting/Disassembly ... 425
9 Technical data ... 427
9.1 Technical data in Siemens Industry Online Support ... 427
9.2 Overview tables ... 427
10 Circuit diagrams ... 429
10.1 CAx data ... 429
10.2 Contactors and contactor accessories ... 430
10.3 Capacitor contactors (S00 / S0 / S2) ... 446
10.4 Reversing contactor assemblies (S00 / S0 / S2 / S3) ... 450
10.5 Reversing contactor assemblies (S6 / S10 / S12) ... 451
10.6 Contactor assemblies for star-delta (wye-delta) start (S00 / S0 / S2 / S3) ... 453
10.7 Contactor assemblies for star-delta (wye-delta) start (S6 / S10 / S12) ... 456
A Types of coordination ... 459
B References ... 461
B.1 References ... 461
B.2 Manuals - SIRIUS Modular System ... 463
B.3 More information ... 465
C Dimension drawings (dimensions in mm) ... 467
C.1 CAx data ... 467
C.2 3RT2.1 contactors and 3RH2 contactor relays (size S00) ... 468
C.3 3RT2.2 contactors (size S0) ... 474
C.4 3RT2.3 contactors (size S2) ... 480
C.5 3RT2.4 contactors (size S3) ... 484
C.6 3RT1.5 contactors (size S6) ... 488
C.7 3RT1.6 contactors (size S10) ... 489
C.8 3RT1.7 contactors (size S12) ... 490

C.9 3RT26 capacitor contactors 491
C.9.1 3RT261 capacitor contactors (size S00) 491
C.9.2 3RT262 capacitor contactors (size S0) 492
C.9.3 3RT263 capacitor contactors (size S2) 495

C.10 3RA23 reversing contactor assemblies 496
C.10.1 3RA231 reversing contactor assemblies (size S00) 496
C.10.2 3RA232 reversing contactor assemblies (size S0) 498
C.10.3 3RA233 reversing contactor assemblies (size S2) 502
C.10.4 3RA234 reversing contactor assemblies (size S3) 503
C.10.4.1 3RA234.-8X.30-1 reversing contactor assemblies (size S3) 503
C.10.4.2 Drilling diagram for 3RA234.-8X.30-1 reversing contactor assemblies (size S3) 503

C.11 3RA24 contactor assemblies for star-delta (wye-delta) start 504
C.11.1 3RA241 contactor assemblies for star-delta (wye-delta) start (size S00) 504
C.11.2 3RA242 contactor assemblies for star-delta (wye-delta) start (size S0) 506
C.11.2.1 3RA242.-8X.3.-1 contactor assemblies for star-delta (wye-delta) start (size S0, screw-type connection system) 506
C.11.2.2 Drilling diagram for 3RA242.-8X.3.-1 contactor assemblies for star-delta (wye-delta) start (size S0, screw-type connection system) 506
C.11.2.3 3RA242.-8X.3.-2 contactor assemblies for star-delta (wye-delta) start (size S0, spring-loaded connection system) 507
C.11.2.4 Drilling diagram for 3RA242.-8X.3.-2 contactor assemblies for star-delta (wye-delta) start (size S0, spring-loaded connection system) 507
C.11.3 3RA243 contactor assemblies for star-delta (wye-delta) start (size S2) 508
C.11.4 3RA244 contactor assemblies for star-delta (wye-delta) start (size S3) 510
C.11.4.1 3RA244.-8X.32-1 contactor assemblies for star-delta (wye-delta) start (size S3) 510
C.11.4.2 Drilling diagram for 3RA244.-8X.32-1 contactor assemblies for star-delta (wye-delta) start (size S3) 511

Index 513

Introduction 1

1.1 Responsibility of the user for system configuration and functionality

The SIRIUS portfolio offers various switching devices for the safe and functional switching of electrical loads. 3RT2 contactors are available in sizes S00 to S3. 3RT1 contactors are available in sizes S6 to S12.

- 3RT.0 power contactors and 3RT12 vacuum contactors for switching motorized loads
- 4-pole 3RT23 contactors for switching resistive loads
- 3-pole 3RT24 / 3RT14 contactors for switching resistive loads
- 4-pole 3RT25 contactors for changing the polarity of hoisting gear motors
- 3RH2 contactor relays for switching in the control circuit
- 3RT26 capacitor contactors for switching capacitive loads (AC-6b)
- 3RT1 / 3RT2 / 3RH2 contactors with extended operating range
  - 3RT10 / 3RT20 / 3RH21 contactors for rail applications
  - 3RT20 / 3RH21 coupling relays for system-compliant interaction with electronic controllers
- Operation of a motor in two directions of rotation (reversing contactor assembly)
- Starting three-phase motors with reduced starting current peaks (contactor assemblies for star-delta (wye-delta) start)

Siemens AG, its regional offices, and associated companies (hereinafter referred to as "Siemens") cannot guarantee all the properties of an overall installation or machine that has not been designed by Siemens.

Nor can Siemens assume liability for recommendations that appear or are implied in the following description. No new guarantee, warranty, or liability claims beyond the scope of the Siemens general terms of supply are to be derived or inferred from the following description.

Note

When designing a system, comply with all valid national installation specifications and standards.

1.2 Purpose of the manual

This manual describes 3RT2 contactors (up to 55 kW), 3RT1 contactors (from 55 kW), 3RH21 contactor relays, reversing contactor assemblies, and contactor assemblies for star-delta (wye-delta) start, and it supplies the following information:

- Information about integrating the contactors and contactor assemblies into the system environment.
- Information on necessary hardware components.
- Information about installing and connecting the contactors.
- Technical information such as dimension drawings and unit wiring diagrams.

The information in this manual enables you to configure and commission the contactors.

1.3 Advantages through energy efficiency

Siemens offers you a unique portfolio for efficient energy management in industry – a process that serves to optimally shape your energy requirement. Operational energy management is subdivided into three phases:

- Identification
- Evaluation
- Realization

Siemens supports you with suitable hardware and software solutions in every phase of a project.

More information can be found on the Internet (http://www.automation.siemens.com/mcms/industrial-controls/en/energy-efficiency).

3RT contactors make the following contribution to energy efficiency in the overall plant:

- AC/DC coils with electrical control to reduce the closing power and holding power
- Smaller power supplies in the control circuit through low holding power at 24 V DC
- Reduced energy requirements of the contactors thanks to increased switching capacity in each size from S00 to S3

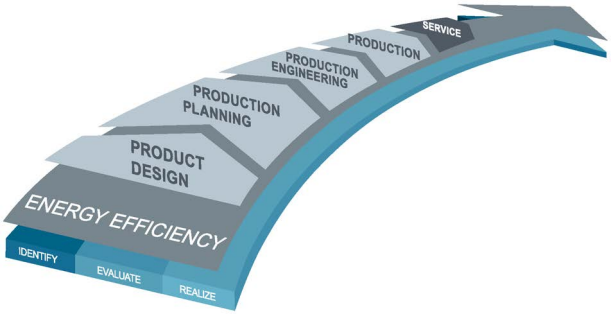

Figure 1-1 Overview of the energy management process

1.4 Required basic knowledge

To understand these operating instructions you should have a general knowledge of automation engineering and low-voltage switchgear.

1.5 Scope of the manual

The manual is valid for these contactors and contactor assemblies. It contains a description of the devices that is valid at the time of publication.

1.6 Siemens Industry Online Support

Information and Service

In Siemens Industry Online Support, you can obtain up-to-date information from our global support database quickly and simply. To accompany our products and systems, we offer a wealth of information and services that provide support in every phase of the lifecycle of your machine or plant – from planning and implementation, through commissioning, up to maintenance and modernization:

- Product support
- Application examples
- Services
- Forum
- mySupport

Link: Siemens Industry Online Support (https://support.industry.siemens.com/cs/ww/en)

Product support

You will find here all the information and comprehensive know-how covering all aspects of your product:

- **FAQs**

  Our answers to frequently asked questions.
- **Manuals/operating instructions**

  Read online or download, available as PDF or individually configurable.
- **Certificates**

  Clearly sorted according to approving authority, type and country.
- **Characteristic curves**

  For support in planning and configuring your system.
- **Product announcements**

  The latest information and news concerning our products.
- **Downloads**

  You can find here updates, service packs, HSPs and much more for your product.
- **Application examples**

  Function blocks, background and system descriptions, performance statements, demonstration systems, and application examples, clearly explained and represented.
- **Technical data**

  Technical product data for support in planning and implementing your project.

Link: Product support (https://support.industry.siemens.com/cs/ww/en/ps)

mySupport

With "mySupport", your personal workspace, you get the very best out of your Industry Online Support. Everything to enable you to find the right information every time.

The following functions are now available:

- Personal messages
  Your personal mailbox for exchanging information and managing your contacts
- Inquiries
  Use our online form for specific solution suggestions, or send your technical inquiry directly to a specialist in Technical Support
- Notifications
  Make sure you always have the latest information - individually tailored to your needs
- Filters
  Simple management and re-use of your filter settings from Product Support and the Technical Forum
- Favorites / Tags
  Create your own knowledge database by assigning "Favorites" and "Tags" to documents – simply and efficiently
- Entries last viewed
  Clear presentation of your last viewed entries
- Documentation
  Configure your individual documentation from different manuals – quickly and without complications
- Personal data
  Change personal data and contact information here
- CAx data
  Simple access to thousands of items of CAx data such as 3D models, 2D dimension drawings, EPLAN macros and much more

1.7 Further documentation

To install and connect the contactors and contactor assemblies, you require the operating instructions of the contactors and contactor assemblies used.

You can find a list of operating instructions and an overview of the manuals pertaining to the SIRIUS modular system in the Appendix "References (Page 461)".

1.8 DataMatrix code

A Data Matrix code has been lasered onto the contactors and contactor assembly enclosures.

The Data Matrix codes are standardized in ISO/IEC 16022. The Data Matrix codes on Siemens devices use ECC200 coding for powerful error correction.

The following information is stored in the Data Matrix code:

1P	Article number	+	S	Location	/	Date	Serial number
Data identifier	User content	Separator	User content		Separator	User content	User content

Note

The information content is displayed without spaces.

This machine-readable information simplifies and accelerates handling of the respective devices.
As well as fast access to the serial numbers of the respective devices for unique identification, the Data Matrix codes simplify communication with Siemens Technical Support.

1.9 Siemens Industry Online Support app

Siemens Industry Online Support app

You can use the Siemens Industry Online Support app to access all the device-specific information available on the Siemens Industry Online Support portal for a particular article number, including operating instructions, manuals, datasheets, FAQs etc.
The Siemens Industry Online Support app is available for iOS, Android or Windows Phone devices. You can download the app from the following links:

Link for Android

Link for iOS

Link for Windows Phone

1.10 Recycling and disposal

These devices can be recycled thanks to their low pollutant content. For environmentally-friendly recycling and disposal of your electronic waste, please contact a company certified for the disposal of electronic waste.

1.11 Technical Assistance

Up-to-the-minute information

You can obtain further assistance by calling the following numbers:

Technical Assistance:

Telephone: +49 (911) 895-5900 (8 a.m. to 5 p.m. CET)

Fax: +49 (911) 895-5907

or on the Internet at:

E-mail: (mailto:technical-assistance@siemens.com)

Internet: (http://www.siemens.com/sirius/technical-assistance)

Standards

2

2.1 Standards and product approvals

Applicable regulations, standards, and approvals

Below is a list of extracts from the most important standards and approvals of the 3RT and 3RH contactors.

Note

Depending on meaning, some standards and approvals are applied only to specific product variants and are restricted to these. For example, the IEC 60077-2 standard is taken into account only for contactors for rail applications but not for standard contactors.

Standard / approvals	Description	Note
IEC 60947-1	Low-voltage switchgear and controlgear - General rules	
IEC 60947-4-1	Low-voltage switchgear and controlgear Part 4-1: Electromechanical contactors and motor-starters	Main approval for IEC-orientated international markets
IEC 60947-5-1	Low-voltage switchgear and controlgear Part 5-1: Control circuit devices and switching elements - Electromechanical control circuit devices	Relevant for auxiliary circuits and 3RH contactor relays
IEC 60077-2	Railway applications - Electric equipment for rolling stock - Part 2: Electrotechnical components - General rules	Additional approval for railroad applications
UL 60947-1	Low-Voltage Switchgear and Control gear - Part 1: General rules	Approvals for the UL market, predominantly the USA
UL 60947-4-1	Low-Voltage Switchgear and Control gear - Part 4-1: Contactors and motor-starters - Electromechanical contactors and motor-starters	
CSA-C22.2 No. 14 -13	Industrial Control Equipment	Approvals specifically for the Canadian market
CAN/CSA-C22.2 No 60947-1-13	Low-Voltage Switchgear and Control gear - Part 1: General rules	
CAN/CSA-C22.2 No 60947-4-1-14	Low-Voltage Switchgear and Control gear - Part 4-1: Contactors and motor-starters - Electromechanical contactors and motor-starters	
CCC	Certificate for China Compulsory Product Certification	Approval specifically for the Chinese market

Reference

SIRIUS components have been approved by a whole range of bodies for various sectors (shipbuilding, etc.). More information and certificates for download are available on the Internet (https://support.industry.siemens.com/cs/ww/en/ps/16131/cert).

Reference

You can find all the technical data and other information regarding the products in the Siemens Industry Online Support (https://support.industry.siemens.com/cs/ww/en/ps/16132/td).

2.2 Protective separation

Definition

In order for the "protective separation" of circuits to be achieved, an individual fault must not be able to trigger a voltage overspill from one circuit into another. The kinds of fault to be taken into account include twisted or loose conductive parts, twisted solder pins, broken winding wires, missing screws, or broken barriers within a device.

Protective separation for 3RT10, 3RT20 and 3RH2 contactor relays

The term "protective separation" is used in relation to safety extra low voltage (SELV/PELV) and functional extra low voltage (FELV). Protective separation reliably prevents a dangerous contact voltage from spilling over to the voltage which has been protectively separated (e.g. to a safety extra low voltage which is present or switched in the same device). If the current paths of a contactor are operated at different voltages, "protective separation" requirements must be met. With 3RT1 and 3RT2 contactors, and 3RH2 contactor relays, "protective separation" is ensured up to a certain voltage.

Regulations

"Protective separation" between circuits within equipment is achieved by complying with the basic requirements contained in the IEC 60947-1 standard.

Basic requirements include, for example:

- Double or reinforced insulation
- Electrically protective shielding
- Combination of double or reinforced insulation and electrically protective shielding

The insulation must be resistant to aging for the duration of the expected service life.

Circuits without a safety extra low voltage or a functional extra low voltage do not require protective separation.

2.3 Positively driven contact elements/Mirror contacts

Positively driven contacts for contactor relays according to IEC 60947-5-1

Positively-driven contact elements according to IEC 60947-5-1 are a combination of "n" NO contacts and "m" NC contacts which are designed in such a way that they cannot be closed simultaneously. "Positively driven operation" may only apply to auxiliary switch elements which are contained in switching devices and whose actuating forces are generated internally. An example of such elements are the SIRIUS 3RH2 contactor relays.

All SIRIUS 3RH2 contactor relays (with at least 1 NC contact) are tested to IEC 60947-5-1, and ever since the product was launched, they have featured positively driven contact elements in the basic device, or in the basic device in conjunction with auxiliary switches.



Figure 2-1 Symbol for positively driven contact elements in a switching device

Mirror contact for power contactors to IEC 60947-4-1

A mirror contact according to IEC 60947-4-1 is an auxiliary NC contact that cannot be closed simultaneously with an NO main contact.

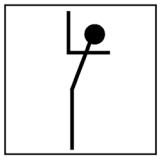

Figure 2-2 Symbol for mirror contacts in a switching device

All SIRIUS 3RT1 / 3RT2 motor contactors (with at least 1 NC auxiliary contact) are tested to EN 60947-4-1 and have featured mirror contact characteristics in conjunction with auxiliary switches ever since the product was launched.

Note

Both contact characteristics, the positively driven contact element in the contactor relay as well as the mirror contact in the power contactor, meet the same technical requirements.

The 3RT1 / 3RT2 / 3RH2 contactors are suitable for applications in the safety circuit. For contactor relays, this applies on account of the positively driven operation of the contacts. For motor contactors, it applies on account of the mirror contact properties of the auxiliary contacts.

Employer's Liability Insurance Association / SUVA

In addition to the standards IEC 60947-4-1 and IEC 60947-5-1, the requirements of the German Employer's Liability Insurance Associations or the Swiss Accident Insurance Institute (SUVA) also apply in the case of safety circuits for the protection of personnel. These requirements set stricter conditions for devices with mirror contacts or positively driven contact elements. The basic SUVA requirement is that all auxiliary switches must be mounted on the basic device at the factory in such a way that they cannot be removed. Manual actuation of the contactor must not be possible.

A SUVAPro type-examination certificate confirms that the switching device meets the basic health and safety requirements and that this requirement agreement has been assessed by an accredited European Notified Body.

Note

The SUVA certificate is required if products or systems are operated in Switzerland.

All SIRIUS 3RH2 contactor relays (with at least 1 NC auxiliary contact) are tested according to EN 60947-5-1 and have possessed the SUVA type-examination certificate since product launch.

All SIRIUS 3RT2 motor contactors (with at least 1 NC contact) are tested according to EN 60947-4-1 and can be supplied in accordance with SUVA requirements.

Thanks to the use of a double bridge for the contacts, all 3RT2 motor contactors and 3RH2 contactor relays feature contact redundancy and optimization of the contact surface. This crucially enhances the contactors' contact reliability.

2.4 IE3 / IE4 ready

Ambitious climate protection goals in Europe call for increasingly energy-efficient components.

With this in mind, the energy efficiency class IE3 / IE4 has been mandatory since January 2015 (with exceptions) for three-phase asynchronous motors, and this will have an effect on motors, low-voltage power distribution systems, and industrial controls.

This applies:

- Since January 1, 2015 for motors from 7.5 kW to 375 kW
- From January 1, 2017 for motors from 0.75 kW to 375 kW

You will be optimally equipped for the current motor generation with the SIRIUS modular system components and 3VA molded case circuit breakers.

You will find information on IE3 / IE4 at:
Information IE3 (http://www.siemens.com/IE3ready)

Note

Using 3RT contactors with IE3 / IE4 motors

For the use of 3RT contactors in conjunction with highly energy-efficient IE3 / IE4 motors, please observe the information on dimensioning and configuring in the "Application Manual - SIRIUS Controls with IE3 / IE4 Motors (https://support.industry.siemens.com/cs/ww/en/view/94770820)".

2.5 Applications

Use and application areas

Various different switching devices are available for switching electrical loads. When frequent switching is necessary, the contactor is the ideal device.

Contactors are the most commonly used switching devices in industry, mechanical engineering and switchgear construction. The progressive automation of production plants has increased the significance of contactors, but this is also associated with higher and sometimes different requirements.

An automatic production system is significantly more sensitive to operating faults than manually operated systems. Every fault on an electrical device means a standstill, production downtime, and often substantial costs for recommissioning.

For this reason, value was placed on high operational reliability in the development of the SIRIUS contactor series. High service life, high contact reliability, and the option of using the contactors in the control cabinet at higher ambient temperatures are among the factors contributing to this. The contactors can be used at up to 60 °C and without derating even with side-by-side mounting.

Due to the diverse range application options, the range of contactors also encompasses versions for special applications such as switching resistive loads or switching capacitors, as well as the main 3RT20 and 3RT10 series for switching motorized loads.

The different contactor series with their possible application areas are explained in the following subsections.

Utilization categories

According to DIN EN 60947-4-1, the application area of and the load applied to power contactors can be identified by looking at the specified utilization category in conjunction with the specified rated operational current or the motor power and the rated voltage. The table below lists the most important utilization categories for contactors.

Utilization categories	
AC	**Main circuit contacts: Utilization category for AC voltages**
AC-1	Non-inductive or slightly inductive loads, resistance furnaces
AC-2	Slip-ring motors: starting, switching off
AC-3	Squirrel-cage motors: starting, switching-off motors during running
AC-4	Squirrel-cage motors: starting, plugging, inching
AC-5a	Switching of discharge lamp controls
AC-5b	Switching of incandescent lamps
AC-6a	Switching of transformers
AC-6b	Switching of capacitive loads
DC	**Main circuit contacts: Utilization category for DC voltages**
DC-1	Non-inductive or slightly inductive loads, resistance furnaces
DC-3	Shunt-wound motors: Starting, plugging, reversing, inching, dynamic braking
DC-5	Series-wound motors: Starting, plugging, reversing, inching, dynamic braking
AC	**Auxiliary circuit contacts: Utilization category for AC voltages**
AC-12	Control of resistive loads and solid-state loads with isolation by opto couplers
AC-14	Control of small electromagnetic loads (max. 72 VA)
AC-15	Control of electromagnetic loads (over 72 VA)
DC	**Auxiliary circuit contacts: Utilization category for DC voltages**
DC-12	Control of resistive loads and solid-state loads with isolation by opto couplers
DC-13	Control of electromagnets

Product description

3

3.1 Overview of the contactor range

The SIRIUS portfolio offers various switching devices for the safe and functional switching of electrical loads. The table below provides an overview of the contactor versions and contactor assemblies available in sizes S00 to S12 (table contains versions featuring screw-type connection system).

Size	3RH2 contactor relays	3RT2 power contactors	3RA23 reversing contactor assembly	3RA24 contactor assembly for star-delta (wye-delta) start
S00	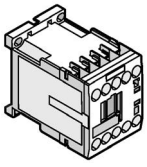	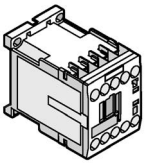	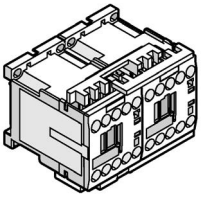	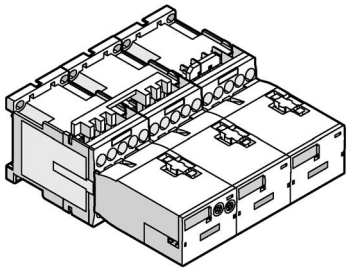
S0	---	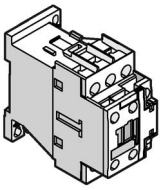	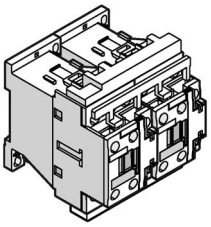	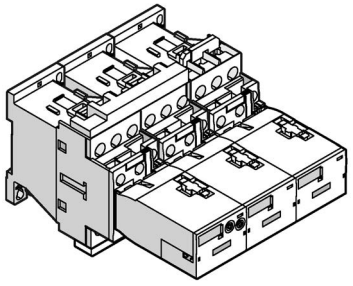

Size	3RH2 contactor relays	3RT2 power contactors	3RA23 reversing contactor assembly	3RA24 contactor assembly for star-delta (wye-delta) start
S2	---	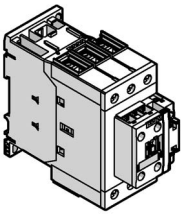	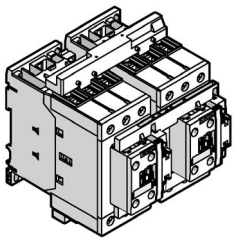	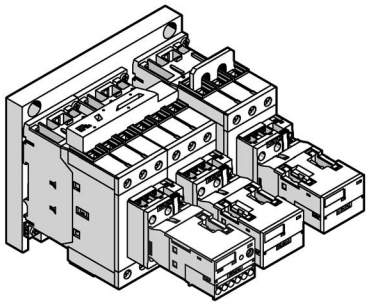
S3	---	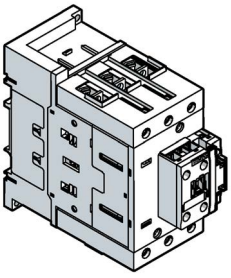	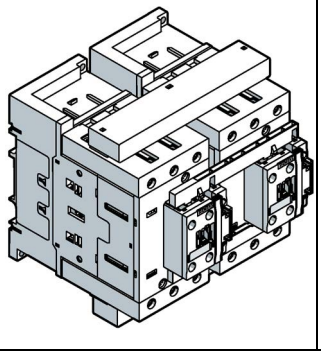	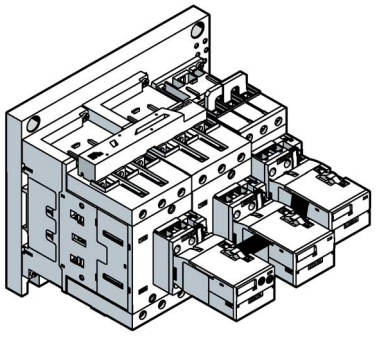

Size	3RT10 power contactors
S6	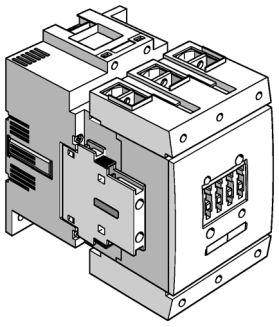
S10 / S12	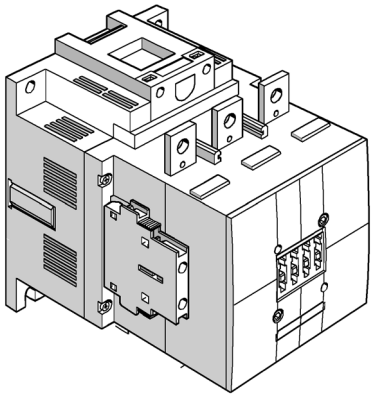

Size	3RT12 vacuum contactors
S10 / S12	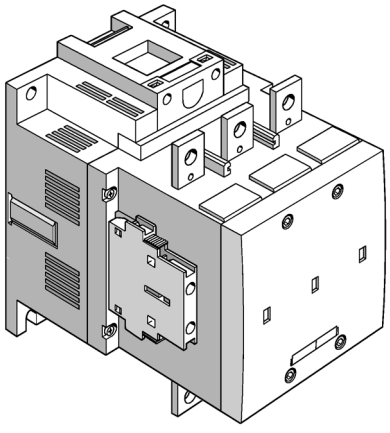

Size	Reversing contactor assembly (for self-assembly), size S6, as an example
S6 / S10 / S12	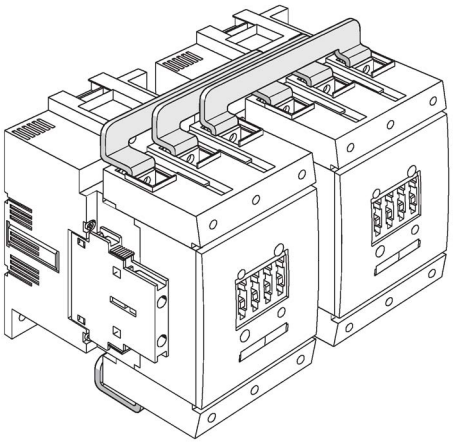

Size	Contactor assembly for star-delta (wye-delta) start (for self-assembly), size S6, as an example
S6 / S10 / S12	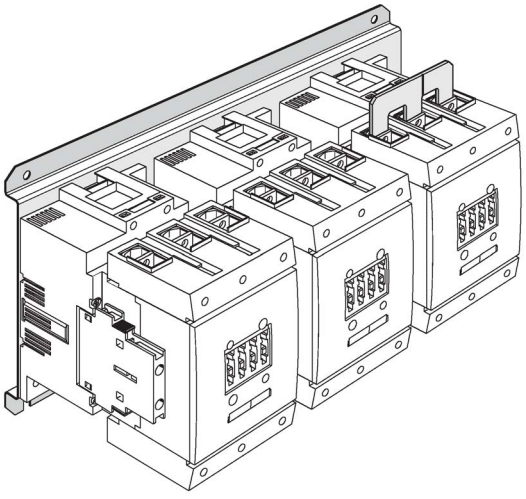

3.2 Device versions

Various different switching devices are available for switching electrical loads. The contactor is the ideal device for performing switching operations which are frequently repeated. it is the most commonly used switching device in industry, mechanical engineering, and the manufacture of switching stations. 3RT2 contactors are available in sizes S00 to S3. 3RT1 contactors are available in sizes S6 to S12.

The SIRIUS range of contactors encompasses:

- 3RT.0 power contactors and 3RT12 vacuum contactors for switching motorized loads
- 4-pole 3RT23 contactors for switching resistive loads
- 3-pole 3RT24 / 3RT14 contactors for switching resistive loads
- 4-pole 3RT25 contactors for changing the polarity of hoisting gear motors
- 3RH2 contactor relays for switching in the control circuit
- 3RT26 capacitor contactors for switching capacitive loads (AC-6b)
- 3RT1 / 3RT2 / 3RH2 contactors with extended operating range
  - 3RT10 / 3RT20 / 3RH21 contactors for rail applications
  - 3RT20 / 3RH21 coupling relays for system-compliant interaction with electronic controllers
- Operation of a motor in two directions of rotation (reversing contactor assembly)
- Starting three-phase motors with reduced starting current peaks (contactor assemblies for star-delta (wye-delta) start)

Sizes

With its seven sizes, the SIRIUS contactor series covers the entire range up to 250 kW. Several standard motor ratings are available for each size.

Reference

More information ...	Can be found in the chapter titled ...
About the basic and special versions of the contactor relays and power contactors	Configuration (Page 63)

3.2.1 3RT2 power contactors

The 3RT2 contactors are equipped with AC and DC operating mechanism options. An electronic AC/DC operating mechanism can also be ordered for size S0. An AC operating mechanism and an electronic AC / DC operating mechanism can be ordered for sizes S2 and S3. Special contactor variants with voltage tap of the main circuit are available for contactor integration via AS-Interface or IO-Link using 3RA27 function modules.
These power contactors are supplied with 24 V DC coils.

Versions

Table 3- 1 Versions of the 3RT2 power contactors

Feature		Specifications					
Version		Power contactor for switching electrical loads	Power contactor with extended operating range for rail applications	Coupling relay for switching electrical loads	3RT23 power contactor with 4 NO contacts	3RT25 power contactor with 2 NO contacts and 2 NC contacts	3RT24 power contactor for switching resistive loads
Number of poles		3	3	3	4	2 NO contacts and 2 NC contacts	3
Number of integrated auxiliary contacts	S00	1 NO contact or 1 NC contact			—	—	—
	S0	1 NO contact and 1 NC contact					—
	S2	1 NO contact and 1 NC contact					—
	S3	1 NO contact and 1 NC contact		—	—	—	1 NO contact and 1 NC contact

Connection systems

The power contactors can be supplied with the connection systems detailed below:

- Screw connection
- Spring-loaded connection (sizes S2 and S3, auxiliary and control line only)
- Ring cable lug connection system (size S0 / S00 only)
- Busbar connection (size S3 only)
- Box terminal connection (size S3 only)
- Solder pin connection (size S00 only)

  Solder pin connection is only possible in conjunction with the optional solder pin adapter accessory)

3RT201 power contactors (size S00)

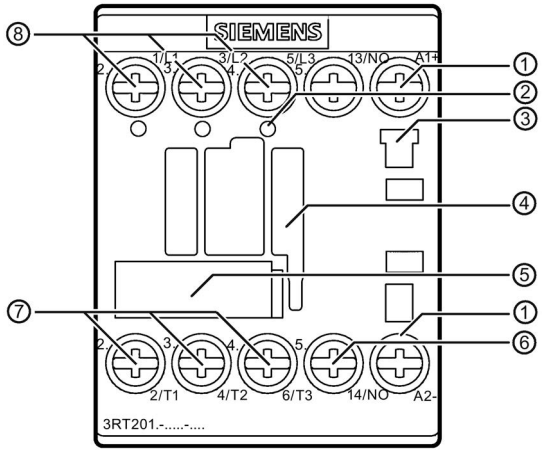

① Coil terminal on the front
② Openings for voltage tap of the main circuit (only special version with voltage tap)
③ Location hole for surge suppression
④ Location hole for 1-, 2-, and 4-pole auxiliary switch blocks
⑤ Label
⑥ 1 auxiliary contact integrated (1 NO contact)
⑦ Contactor's main circuit terminal to the load / motor connection (T1, T2, T3)
⑧ Contactor's main circuit terminal to the power network (L1, L2, L3)

Figure 3-1 3RT201.-.....-.... power contactor, size S00, overview

3RT202 power contactors (size S0)

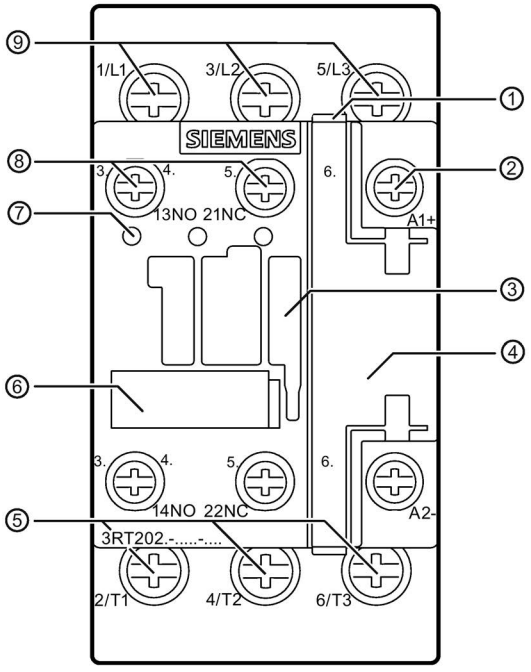

① Cable duct
② Coil terminal on the front
③ Location hole for 1-, 2-, and 4-pole auxiliary switch blocks
④ Location hole for surge suppression (underneath flap)
⑤ Contactor's main circuit terminal to the load / motor connection (T1, T2, T3)
⑥ Label
⑦ Openings for voltage tap of the main circuit (only special version with voltage tap)
⑧ 2 auxiliary contacts integrated (1 NO contact and 1 NC contact)
⑨ Contactor's main circuit terminal to the power network (L1, L2, L3)

Figure 3-2 3RT202.-.....-.... power contactor, size S0, overview

3RT203 power contactors (size S2)

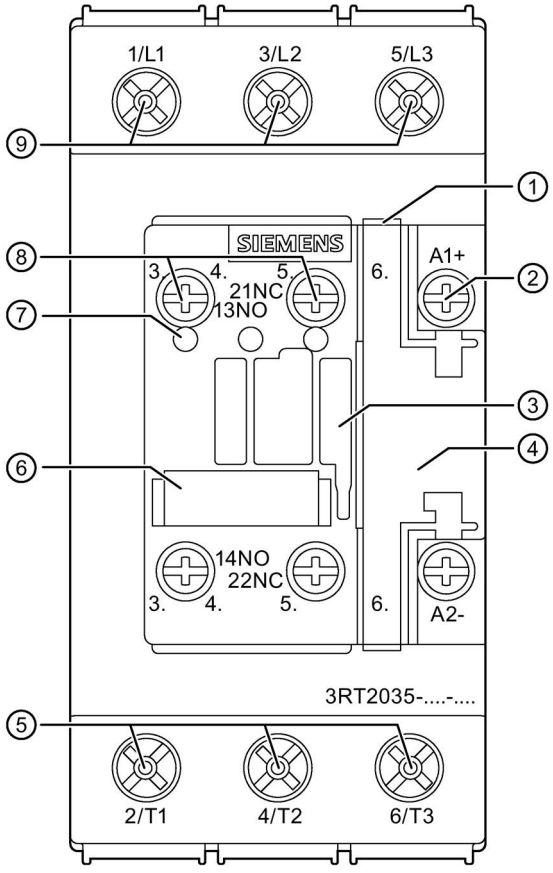

① Cable duct
② Coil terminal on the front
③ Location hole for 1-, 2-, and 4-pole auxiliary switch blocks
④ Location hole for surge suppression (underneath flap)
⑤ Contactor's main circuit terminal to the load / motor connection (T1, T2, T3)
⑥ Label
⑦ Openings for voltage tap of the main circuit (only special version with voltage tap)
⑧ 2 auxiliary contacts integrated (1 NO contact and 1 NC contact)
⑨ Contactor's main circuit terminal to the power network (L1, L2, L3)

Figure 3-3 3RT203.-.....-.... power contactor, size S2, overview

3RT204 / 3RT244 power contactors (size S3)

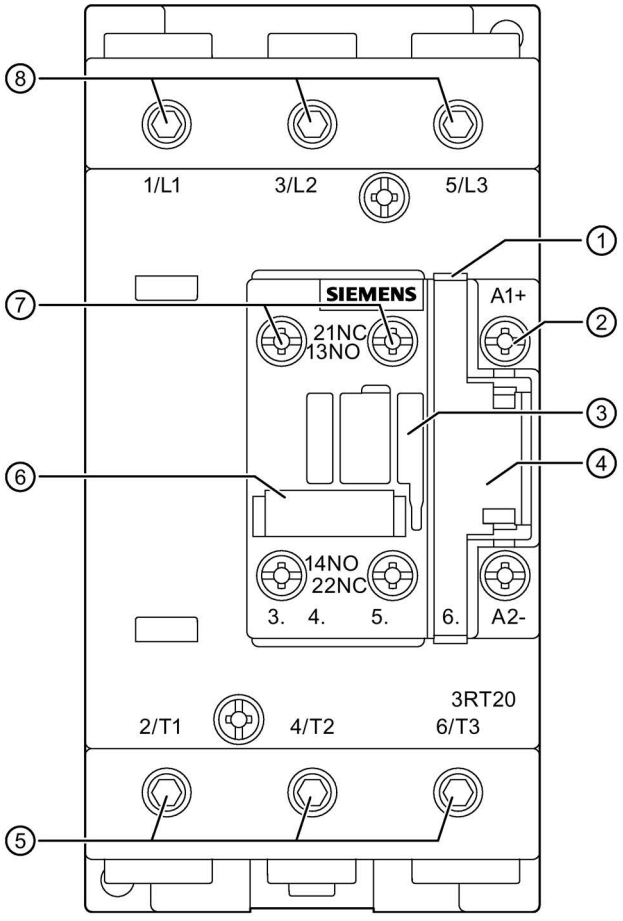

① Cable duct
② Coil terminal on the front
③ Location hole for 1, 2 and 4-pole auxiliary switch blocks
④ Location hole for surge suppression (underneath flap)
⑤ Removable main circuit terminal of the contactor to the load / motor connection (T1, T2, T3). A ring cable lug connection or a busbar connection is optionally possible following removal of the box terminal block.
⑥ Label
⑦ 2 auxiliary contacts integrated (1 NO contact and 1 NC contact)
⑧ Removable main circuit terminal of the contactor to the power network (L1, L2, L3). A ring cable lug connection or a busbar connection is optionally possible following removal of the box terminal block.

Figure 3-4 3RT204.-.....-.... power contactor, size S3, overview (example illustration)

3.2.2 3RT10 / 3RT14 power contactors and 3RT12 vacuum contactors

The 3RT1 contactors are equipped with conventional AC / DC and electronic AC / DC operating mechanism options.

The electronic operating mechanism has two operating modes and can be optionally equipped with a remaining lifetime indication.

Versions

Table 3- 2 Versions of the 3RT1 power contactors

Feature		Specifications		
Version		3RT10 power contactor and 3RT12 vacuum contactors for switching of electrical loads	3RT10 power contactor with extended operating range for rail applications	3RT14 power contactor for switching resistive loads
Number of poles		3		
Number of factory-mounted auxiliary contacts	S6	2 NC contacts and 2 NO contacts		
	S10	2 NC contacts and 2 NO contacts		
	S12	2 NC contacts and 2 NO contacts		

Auxiliary contact complement

The vacuum contactors can be fitted with up to eight lateral auxiliary contacts. Please ensure symmetry in the case of laterally-mounted auxiliary switch blocks. Up to four NC contacts are permissible.

Connection systems

The contactors can be supplied with the connection systems detailed below:

- Screw connection
- Spring-loaded connection
- Bus connection
- Box terminal connection

3RT105 / 3RT145 power contactors (size S6)

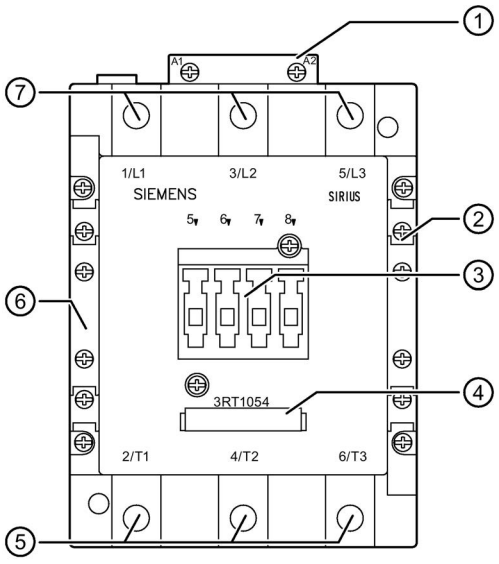

① Coil terminal A1 / A2
With an electronic operating mechanism, additional terminals + / - 24 V DC signal (operation via control signal input)
② 4 laterally mounted auxiliary contacts (2 NO contacts and 2 NC contacts)
③ Location hole for 1-, 2-, and 4-pole auxiliary switch blocks
④ Label
⑤ Main circuit connection as busbar connection (T1, T2, T3)
⑥ 4 laterally mounted auxiliary contacts (2 NO contacts and 2 NC contacts)
⑦ Main circuit connection as busbar connection (L1, L2, L3)

Figure 3-5 3RT1054-6NB36 power contactor, size S6, overview (example illustration)

3RT106 / 3RT146 power contactors (size S10)

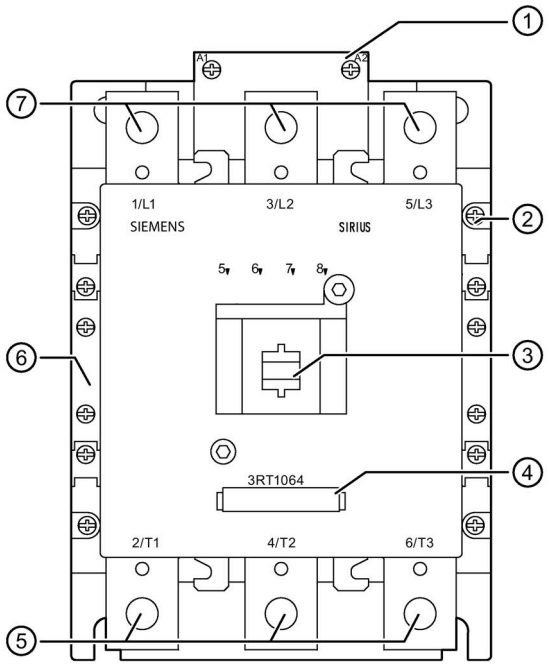

① Coil terminal A1 / A2
With an electronic operating mechanism, additional terminals + / - 24 V DC signal (operation via control signal input)
② 4 laterally mounted auxiliary contacts (2 NO contacts and 2 NC contacts)
③ Location hole for 1-, 2-, and 4-pole auxiliary switch blocks
④ Label
⑤ Main circuit connection as busbar connection (T1, T2, T3)
⑥ 4 laterally mounted auxiliary contacts (2 NO contacts and 2 NC contacts)
⑦ Main circuit connection as busbar connection (L1, L2, L3)

Figure 3-6 3RT1064-6AB36 power contactor, size S10, overview (example illustration)

3RT107 / 3RT147 power contactors (size S12)

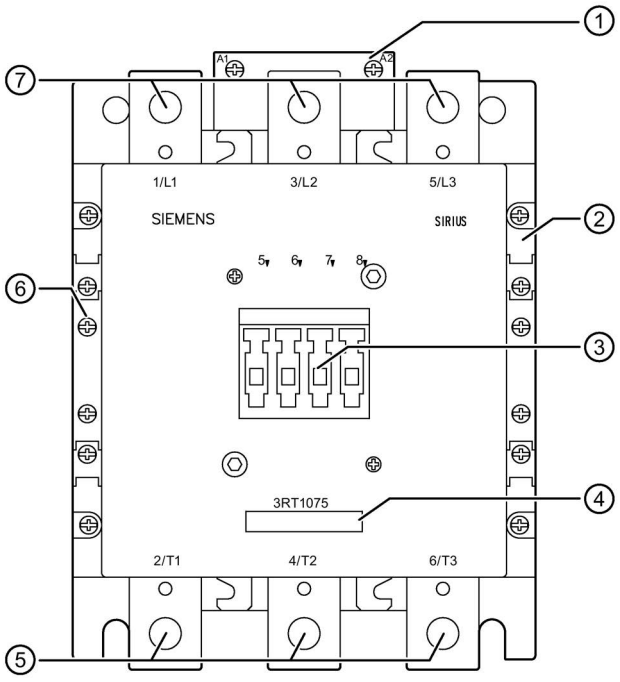

① Coil terminal A1 / A2
With an electronic operating mechanism, additional terminals + / - 24 V DC signal (operation via control signal input)
② 4 laterally mounted auxiliary contacts (2 NO contacts and 2 NC contacts)
③ Location hole for 1-, 2-, and 4-pole auxiliary switch blocks
④ Label
⑤ Main circuit connection as busbar connection (T1, T2, T3)
⑥ 4 laterally mounted auxiliary contacts (2 NO contacts and 2 NC contacts)
⑦ Main circuit connection as busbar connection (L1, L2, L3)

Figure 3-7 3RT1075-6NB36 power contactor, size S12, overview (example illustration)

3RT126 vacuum contactors (size S10)

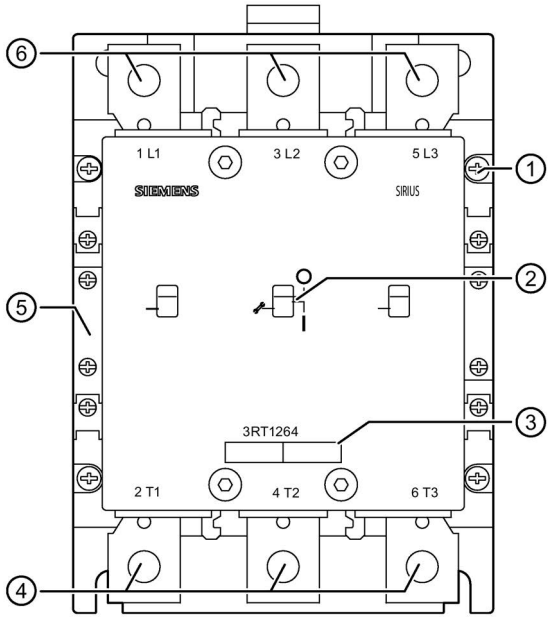

① 4 laterally mounted auxiliary contacts (2 NO contacts and 2 NC contacts)
② Contact erosion indicator and switch position indicator
③ Label
④ Main circuit connection as busbar connection (T1, T2, T3)
⑤ 4 laterally mounted auxiliary contacts (2 NO contacts and 2 NC contacts)
⑥ Main circuit connection as busbar connection (L1, L2, L3)

Figure 3-8 3RT1264-6LA06 vacuum contactor, size S10, overview

3RT127 vacuum contactors (size S12)

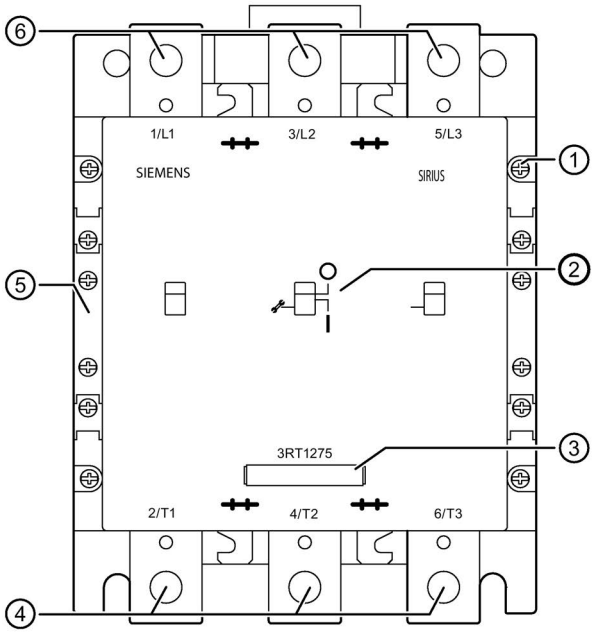

① 4 laterally mounted auxiliary contacts (2 NO contacts and 2 NC contacts)
② Contact erosion indicator and switch position indicator
③ Label
④ Main circuit connection as busbar connection (T1, T2, T3)
⑤ 4 laterally mounted auxiliary contacts (2 NO contacts and 2 NC contacts)
⑥ Main circuit connection as busbar connection (L1, L2, L3)

Figure 3-9 3RT1275-6LA06 vacuum contactor, size S12, overview

3.2.3 3RH2 contactor relays

3RH2 contactor relays are available in the versions detailed below. The contactors can be supplied with AC and DC operating mechanisms of between 24 V and 230 V (preferred voltages). Different voltage versions are available on request.

Versions

Table 3- 3 Versions of the 3RH2 contactor relays

Feature	Specifications	Contactors for special applications	
Version	Contactor relay	Contactors with extended operating range for railway applications	Coupling relay
Number of poles	4 / 8	4	4
Size	S00		
Width	45 mm		

Connection systems

The contactor relays can be supplied with the connection systems detailed below.

Table 3- 4 Connection systems available for 3RH2 contactor relays

Connection system	Contactor relay	Contactors with extended operating range for railway applications	Coupling relay
Screw connection	✓	✓	✓
Spring-loaded connection	✓	✓	✓
Ring cable lug connection	✓	---	---
Solder pin connection (only possible in conjunction with the "solder pin adapter" optional accessory)	✓	✓	✓

The illustrations below show example equipment features of the 3RH2 contactor relays for switching in the auxiliary circuit.

3RH21 contactor relay, 4-pole

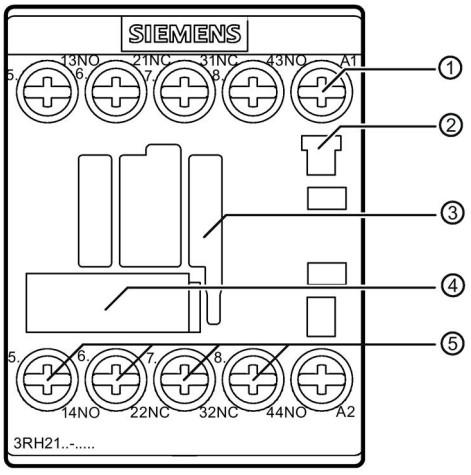

① Coil terminal on the front
② Location hole for surge suppression
③ Location hole for 1-, 2-, and 4-pole auxiliary switch blocks
④ Label
⑤ Auxiliary contacts

Figure 3-10 3RH21..-..... contactor relay, 4-pole, size S00, overview

3RH22 contactor relay, 8-pole

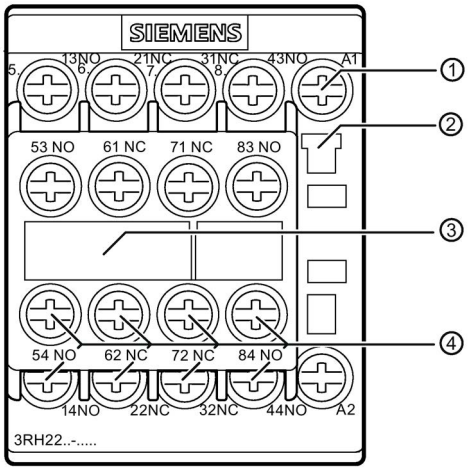

① Coil terminal on the front
② Location hole for surge suppression
③ Label
④ Auxiliary contacts

Figure 3-11 3RH22..-..... contactor relay with auxiliary switch block on the front which cannot be removed, 8-pole, size S00, overview

3.2.4 3RT26 capacitor contactors

The table below shows the different versions of the 3RT26 capacitor contactors. The contactors are equipped with AC and DC operating mechanism options (exception: S2). An electronic AC/DC operating mechanism can also be ordered for sizes S0 and S2.

Versions

The diversity of the freely available auxiliary switches has been increased for 3RT26 capacitor contactors in comparison with the predecessor 3RT16. Further versions to those in the table entitled "Versions of the 3RT26 capacitor contactors" are also available. Please inquire.

For size S2, unassigned auxiliary switches are implemented by means of lateral auxiliary switch blocks.

Units with 2 NC contacts are now continuously available.

Feature		Specification
Version		Capacitor contactor for switching capacitive loads
Number of poles		3
Number of integrated auxiliary contacts	S00	2 NC contacts or 1 NO contact and 1 NC contact
	S0	1 NO contact and 2 NC contacts
	S2	2 NC contacts or 1 NO contact and 1 NC contact

Versions of the 3RT26 capacitor contactors

Connection systems

The capacitor contactors can be supplied with the connection systems detailed below:

- Screw connection

3RT26 capacitor contactors (size S00)

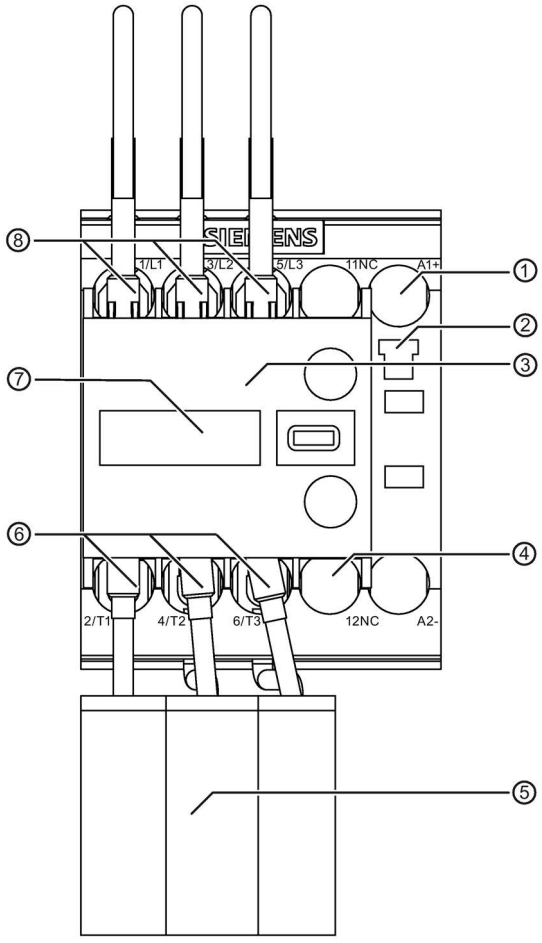

① Coil terminal on the front
② Location hole for surge suppression
③ Permanently mounted 4-pole precharging block for 3 precharging contacts and 1 auxiliary contact
④ 1 integrated auxiliary contact
⑤ Precharging resistors
⑥ Contactor's main circuit terminal to the load (T1, T2, T3)
⑦ Label
⑧ Contactor's main circuit terminal to the power network (L1, L2, L3)

Figure 3-12 3RT2617.-.....-.... capacitor contactor, size S00, overview

3RT26 capacitor contactors (size S0)

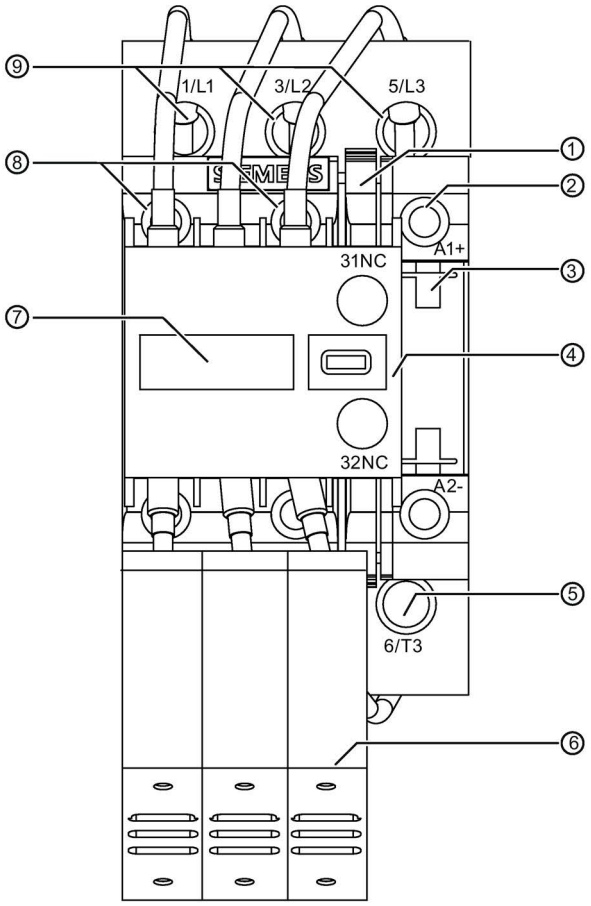

① Cable duct
② Coil terminal on the front
③ Location hole for surge suppression
④ Permanently mounted 4-pole precharging block for 3 precharging contacts and 1 auxiliary contact
⑤ Contactor's main circuit terminal to the load (T1, T2, T3)
⑥ Precharging resistors
⑦ Label
⑧ 2 integrated auxiliary contacts
⑨ Contactor's main circuit terminal to the power network (L1, L2, L3)

Figure 3-13 3RT2625-.....-.... capacitor contactor, size S0, overview

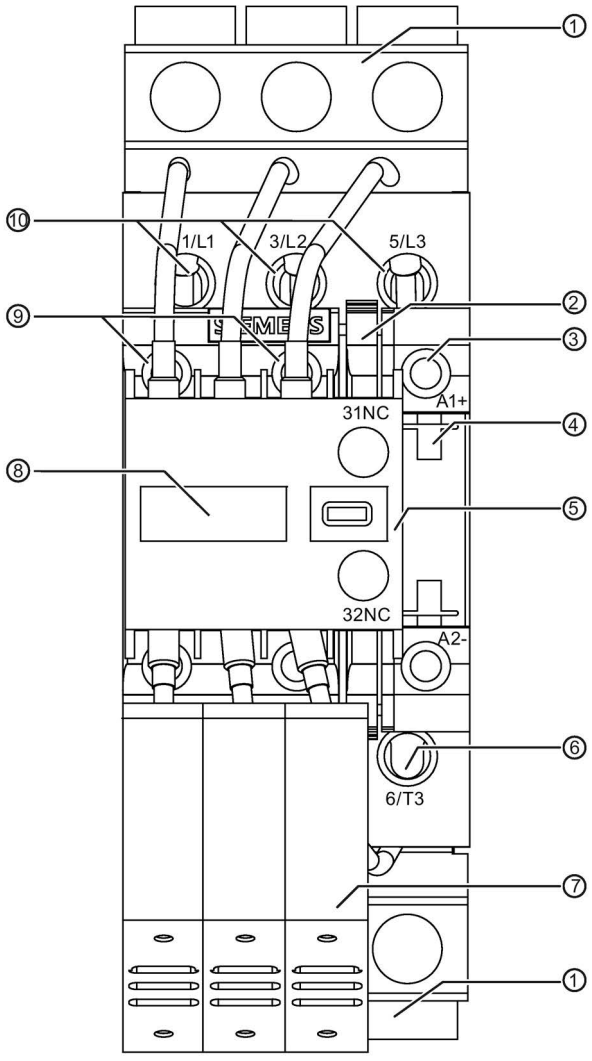

① Infeed terminal
② Cable duct
③ Coil terminal on the front
④ Location hole for surge suppression
⑤ Permanently mounted 4-pole precharging block for 3 precharging contacts and 1 auxiliary contact
⑥ Contactor's main circuit terminal to the load (T1, T2, T3)
⑦ Precharging resistors
⑧ Label
⑨ 2 integrated auxiliary contacts
⑩ Contactor's main circuit terminal to the power network (L1, L2, L3)

Figure 3-14 3RT2628-.....-.... capacitor contactor, size S0, overview

3RT26 capacitor contactors (size S2)

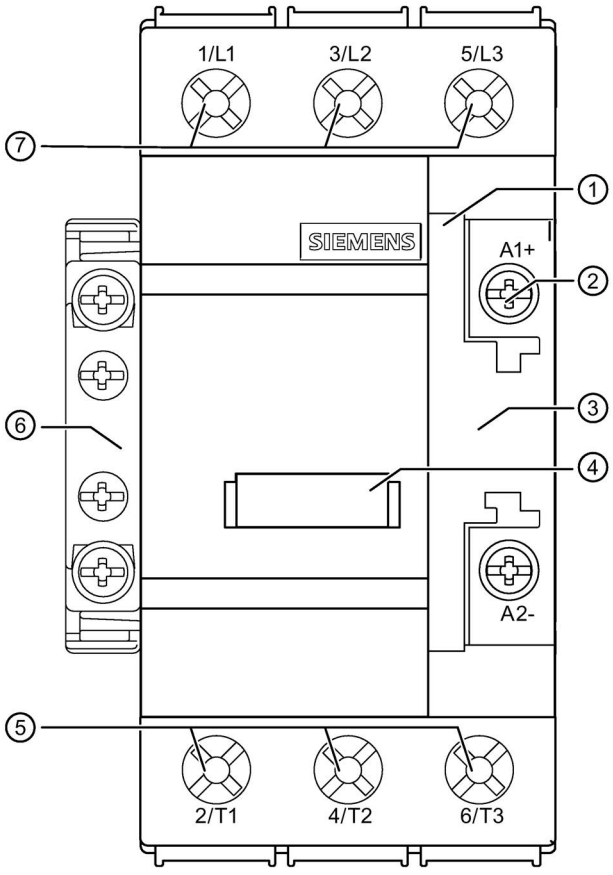

① Cable duct
② Coil terminal on the front
③ Location hole for surge suppression
④ Label
⑤ Contactor's main circuit terminal to the load (T1, T2, T3)
⑥ Lateral auxiliary switch, left, with 2 auxiliary contacts
⑦ Contactor's main circuit terminal to the power network (L1, L2, L3)

Figure 3-15 3RT263.-.....-.... capacitor contactor, size S2, overview

3.2.5 3RA23 reversing contactor assemblies

The reversing contactor assemblies of sizes S00 to S3 are available in two versions:

- Fully wired and tested with electrical and mechanical interlock.
- As a kit for customer assembly.

The fully wired and tested reversing contactor assembly consists of 2 contactors of the same power rating, each with an NC contact in the basic device, link modules and wiring modules. The contactors are mechanically and electrically interlocked (NC contact interlock). The contactor assemblies for reversing are climate-proof. They are safe to touch according to DIN EN 61140.

Connection systems

The fully wired 3RA23 reversing contactor assembly is available either with a screw-type connection system or a spring-loaded connection system (sizes S0 and S00).

Sizes S2 and S3 are only available with screw-type connection. In sizes S2 and S3, the spring-loaded connection system is only available in the control circuit.

The illustrations below show the fully assembled reversing contactor assemblies, in the version with the screw-type connection system.

3RA23 reversing contactor assembly, screw connection, size S00

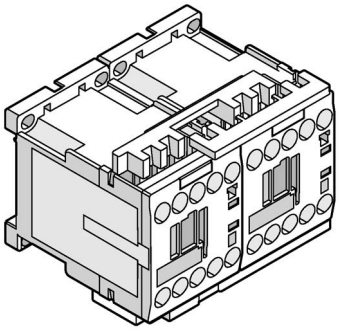

3RA23 reversing contactor assembly, screw connection, size S0

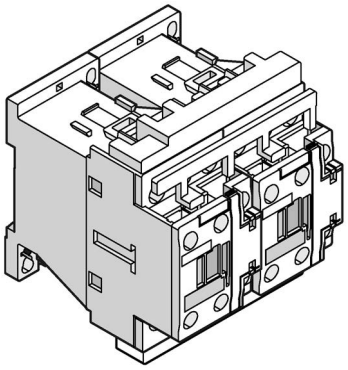

3RA23 reversing contactor assembly, screw connection, size S2

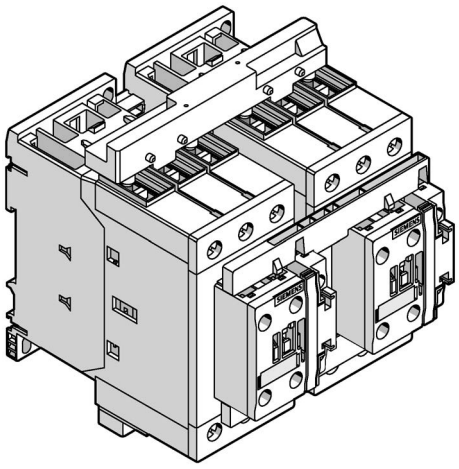

3RA23 reversing contactor assembly, screw connection, size S3

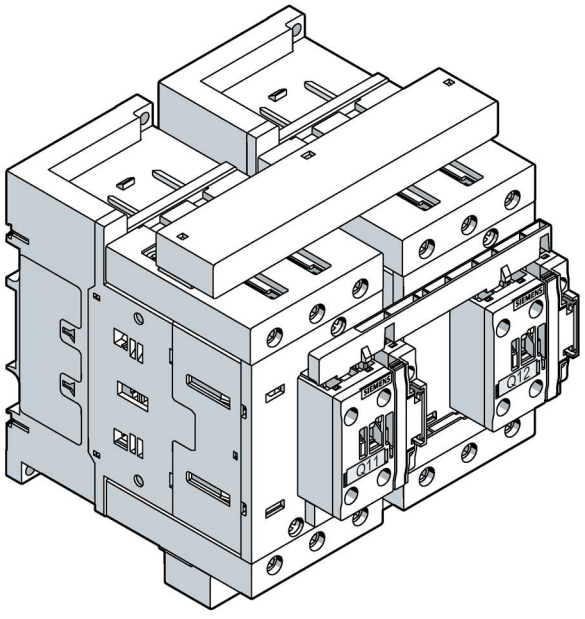

Reversing contactor assemblies with communication interface

The reversing contactor assemblies with communication interface are required for mounting the function modules for connection to the automation level via the bus system.

Reference

More information ...	Can be found in the chapter titled ...
About the 3RA23 reversing contactor assemblies	Operation of a motor in two directions of rotation (reversing contactor assembly) (Page 112).
About the components for self-assembly of the reversing contactor assemblies	Assembly kit for reversing contactor assembly (sizes S00 to S3) (Page 333) and wiring kit for reversing contactor assemblies (sizes S6 to S12) (Page 351).
About the function modules that can be attached to a reversing contactor assembly with communication interface	3RA27 function modules for connection to the controller (AS-Interface or IO-Link). (Page 330)

3.2.6 3RA24 contactor assemblies for star-delta (wye-delta) start

The 3RA24 contactor assembly for star-delta (wye-delta) start consists of three 3-pole contactors (line contactor, star contactor, and delta contactor), main circuit wiring modules, and plug-on function modules for the control circuit wiring.

The 3RA24 contactor assembly for star-delta (wye-delta) start of sizes S00 to S3 is available in two versions:

- Fully wired and tested with electrical and mechanical interlock.
- As a kit for customer assembly.

The fully wired 3RA24 contactor assemblies for star-delta (wye-delta) start can be ordered with the following plug-on function modules:

- Without a communication connection.
- With communication connection (IO-Link or AS-Interface)

Connection systems

The fully wired 3RA24 contactor assembly for star-delta (wye-delta) start is available either with a screw-type connection system or a spring-loaded connection system (sizes S0 and S00).

Sizes S2 and S3 are only available with screw-type connection. In sizes S2 and S3, the spring-loaded connection system is only available in the control circuit.

The illustrations below show the fully assembled contactor assembly for star-delta (wye-delta) start without a communication connection, in the version with the screw-type connection system.

3RA24 contactor assembly for star-delta (wye-delta) start, screw connection, size S00

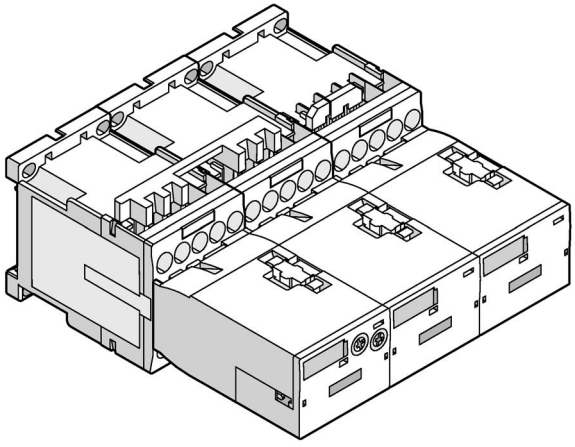

3RA24 contactor assembly for star-delta (wye-delta) start, screw connection, size S0

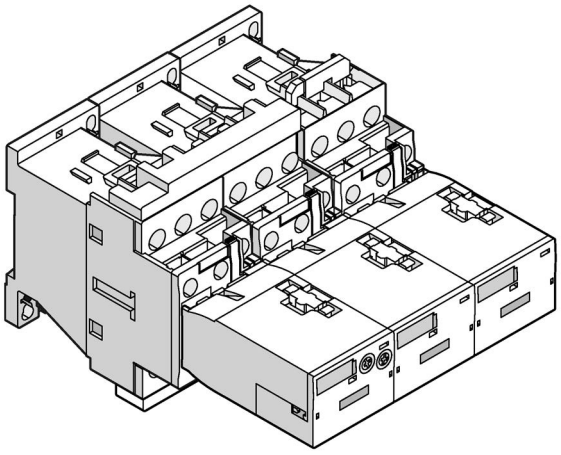

3RA24 contactor assembly for star-delta (wye-delta) start, screw connection, size S2 / S2 / S0

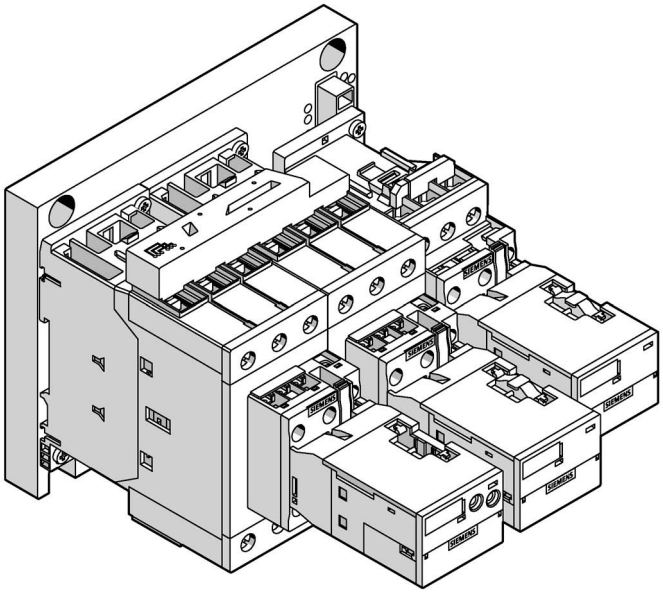

3RA2434-8X.32-1...
3RA2435-8X.32-1...
3RA2436-8X.32-1...

3RA24 contactor assembly for star-delta (wye-delta) start, screw connection, size S2 / S2 / S2

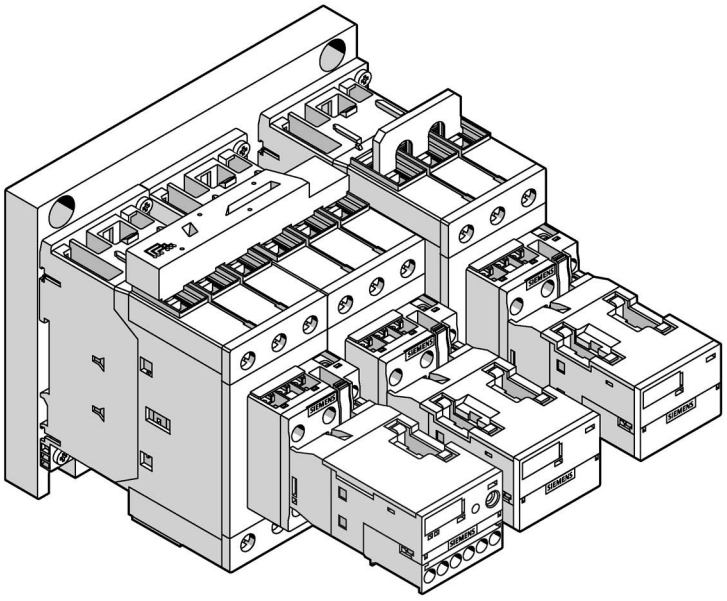

3RA2437-8X.32-1...

3RA24 contactor assembly for star-delta (wye-delta) start, screw connection, size S3 / S3 / S2

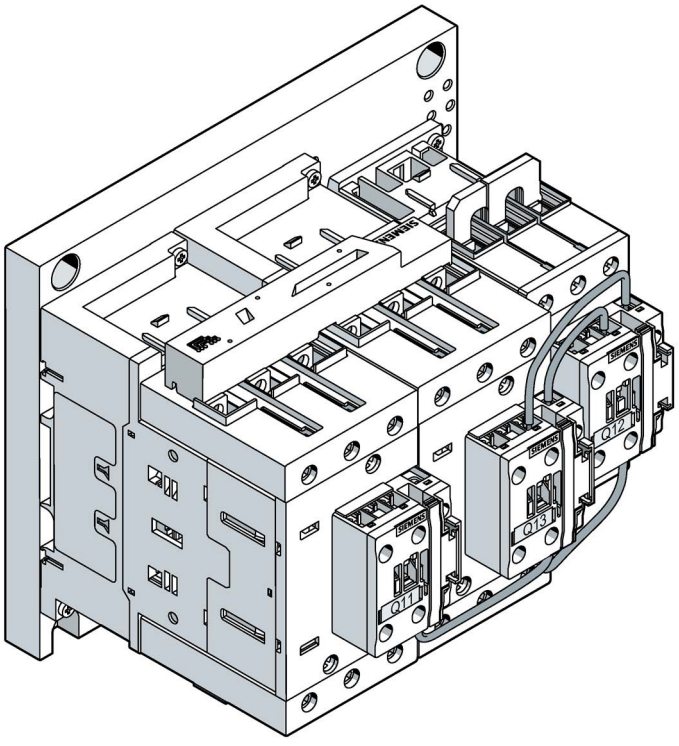

3RA24 contactor assembly for star-delta (wye-delta) start, screw connection, size S3 / S3 / S3

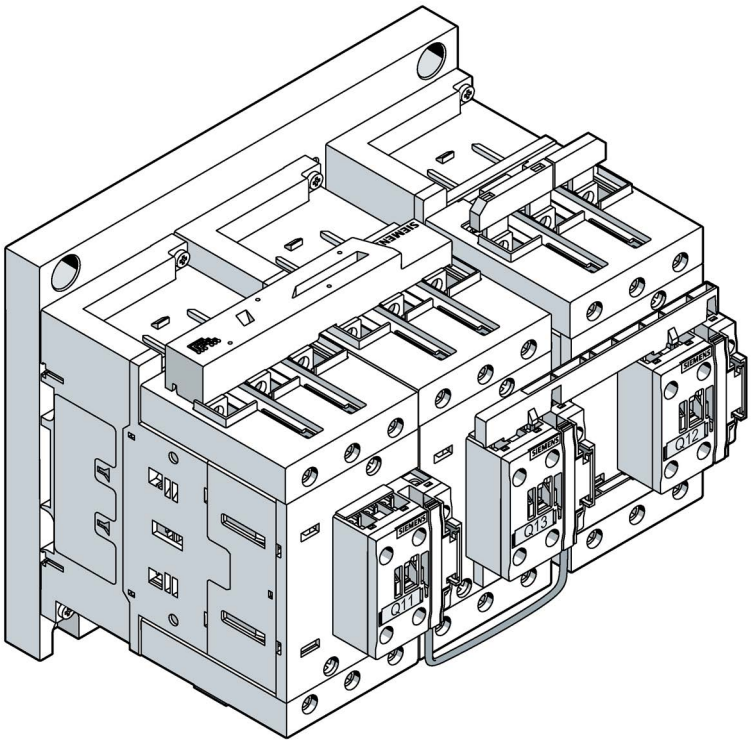

Reference

More information ...	Can be found in the chapter titled ...
About the fully wired 3RA24 contactor assembly for star-delta (wye-delta) start	Starting three-phase motors with reduced starting current peaks (contactor assembly for star-delta (wye-delta) start) (Page 119)
About the components for customers to assemble their own contactor assemblies for star-delta (wye-delta) start	Assembly kit for contactor assemblies for star-delta (wye-delta) start (sizes S00 to S3) (Page 357) and Wiring kit for contactor assemblies for star-delta (wye-delta) start (sizes S6 to S12). (Page 393).

3.2.7 Drive options

Operating mechanism options

The following operating mechanism types are available for 3RH2 contactor relays and 3RT2 power contactors:

- AC operating mechanism (sizes S0, S2 and S3)
- DC operating mechanism (sizes S00 and S0)
- AC / DC operating mechanism (sizes S0, S2 and S3)

The following operating mechanism types are available for 3RT1 contactor relays and 3RT12 power contactors (size S6 to S12):

- AC / DC operating mechanism (conventionally controlled)
- AC / DC operating mechanism (electronically controlled)
  - For 24 V DC PLC output
  - For 24 V DC PLC output, with remaining lifetime signal (RLT)

Reference

More information ...	Can be found in the chapter titled ...
About contactor relay and power contactor applications	Configuration (Page 63)

Product combinations

4

The SIRIUS contactors are part of the SIRIUS modular system and offer all the advantages which SIRIUS users have come to expect in terms of the ability to combine any of the system's products together with any others. These benefits are thanks to the uniform mechanical and electrical properties used throughout the modular system and are also due to the interplay with the higher control level.

As well as the contactor accessories, 3RT2 contactors can also be combined with the following other SIRIUS devices for direct mounting:

- 3RV2 motor starter protectors (with 3RA29 link module)
- Thermal (3RU2) or electronic overload relays (3RB3)
- 3RR2 current monitoring relays
- 3RA28 function modules and 3RA27 function modules with a communication connection

Reference

More information ...	Can be found in the appendix ...
About the possible combinations of standard products from the SIRIUS modular system	"References" under "Manuals - SIRIUS Modular System (Page 463)"

Configuration

5

5.1 Overview of applications for contactors and contactor assemblies

The table below provides an overview of the most important applications for contactors and contactor assemblies.

Application area	Description and suitable contactor versions
Switching motorized loads	Contactors for switching three-phase motors (utilization category AC-3) • 3RT20 3-pole motor contactors • 3RT233..4AA0 4-pole motor contactors • 3-pole 3RT10 motor contactors • 3-pole 3RT12 vacuum contactors
Switching resistive loads	Contactors for switching resistive loads (utilization category AC-1) • 3RT20 3-pole power contactors • 3RT23 4-pole power contactors (4 NO contacts) • 3-pole 3RT24 power contactors (3 NO contacts) • 3RT25 4-pole power contactors (2 NO contacts + 2 NC contacts) • 3-pole 3RT14 power contactors
Changing the polarity of hoisting gear motors	Changing the polarity of hoisting gear motors or switching two separate loads. • 3RT25 4-pole contactors (2 NO contacts + 2 NC contacts)
Switching in the auxiliary circuit	Switching devices for control and auxiliary circuits (utilization categories AC-12/AC-15/AC-14/DC-12/DC-13). • 3RH21 4-pole contactor relays • 3RH22 8-pole contactor relays
Switching of capacitive loads	Contactors for switching capacitive loads (utilization category AC-6b) • 3RT26 3-pole capacitor contactors

Application area	Description and suitable contactor versions	
Contactors with extended operating range	Contactors for railway applications	Contactors for switching electrical loads in the main and control circuits with extended operating and temperature ranges, e.g. for railway applications or for use in rolling mills (special versions of contactor range 3RT20/3RH21). • 3RT2 3-pole power contactors • 3RH2 4-pole contactor relays • 3RT2 3-pole coupling relays • 3RH2 4-pole coupling relays • 3-pole 3RT1 power contactors
	Coupling relays (sizes S00 to S3 only)	The coupling relays are tailored to the special requirements of working with electronic controls (extended operating range and reduced coil power). Different versions are available for main and control circuits (special versions of contactor range 3RT20/3RH21). • 3RT20 3-pole coupling relays • 3RH21 4-pole coupling relays
Contactor assemblies		
Operation of a motor in two directions of rotation (reversing contactor assembly)	Contactor assembly for operation of a three-phase motor in two directions of rotation. • Reversing contactor assemblies	
Starting three-phase motors with reduced starting current peaks (contactor assemblies for star-delta (wye-delta) start)	Contactor assembly for reducing the starting current and starting torque when starting three-phase motors. • Contactor assemblies for star-delta (wye-delta) start	

5.2 SIRIUS system configurator

Reference

To assist you with configuration, the "SIRIUS system configurator" is at your disposal on the Internet. Here, you can gather together all necessary products before the actual configuration process and you can realize complete projects virtually.

You can find the "SIRIUS system configurator" on the Internet (http://www.siemens.com/sirius/configurators).

5.3 Operating mechanism system / coil selection 3RT contactors and 3RH2 contactor relays

5.3.1 Operating mechanism system / coil selection 3RT2 contactors and 3RH2 contactor relays

The 3RT2 power contactors and 3RH2 contactor relays can be supplied with operating mechanisms for all standard AC and DC coil voltages. In addition, 3RT2 power contactors in sizes S0 and S2 are also available with electronic coil control (AC / DC operation) featuring an extended operating range (helping to reduce variance) and lower closing and holding powers that enable lower power consumption in the control cabinet. The solenoid coil for AC / DC operation can be operated with either AC or DC voltage. This is facilitated by control electronics with an upstream DC operating mechanism.

	AC operating mechanisms			DC operating mechanisms			Electronic operating mechanism (AC/DC operating mechanism)	
Size	**S00 … S3**			**S00 ... S0**		**S00 ... S3**	**S0, S2, S3**	
Actuation	AC operation			DC operation			AC / DC operation	
Operating mechanism type	50 Hz	60 Hz	50/60 Hz	DC standard operating mechanism	DC operating mechanism with low power input	DC operating mechanisms for railway applications	AC or DC connection possible	
Coil surge suppressor	Optional (integrated in coupling relays)			Optional (integrated in coupling relays)		Integrated	Integrated (varistor)	
Operating range	0.8 to 1.1 x U_S[1]			0.8 to 1.1 x U_S[1]		0.7 ... 1.25 x U_S[1]	0.7 ... 1.3 x U_S (for S0) 0.8 ... 1.1 x U_S (for S2) 0.8 ... 1.1 x U_S (for S3) 0.8 ... 1.2 x U_S (for S2 coupling relay and S3 coupling relay)	
Preferred voltages	• 24 V • 110 V • 230 V			• 24 V • 110 V • 220 V		• 24 V • 110 V	S0 • 21 to 28 V • 95 to 130 V • 200 to 280 V[2]	S2 / S3 • 20 to 33 V • 83 to 155 V • 175 to 280 V

[1] For further details, refer to the chapter titled "Technical data".

[2] At 280 V: high limit = 1.1 x U_S.

Additional voltage versions are available on request.

5.3.2 Operating mechanism system / coil selection 3RT1 contactors

5.3.2.1 Conventional and electronic operating mechanism types

The common features of both operating mechanism types are:
UC operation, that is, the contactors can be operated with AC (50 to 60 Hz) as well as with DC.

Integrated coil circuit with varistor In most application cases, this is sufficient for a circuit that is adequate to shutdown overvoltages of the solenoid coil. To the extent that especially fault-prone applications make further attenuation measures necessary, RC elements (accessories) can be additionally attached.

Exception:
No additional RC elements can be mounted on the versions with remaining lifetime signal.

The graphic below shows the withdrawable coils for the air-break contactors and vacuum contactors of sizes S6 to S12:

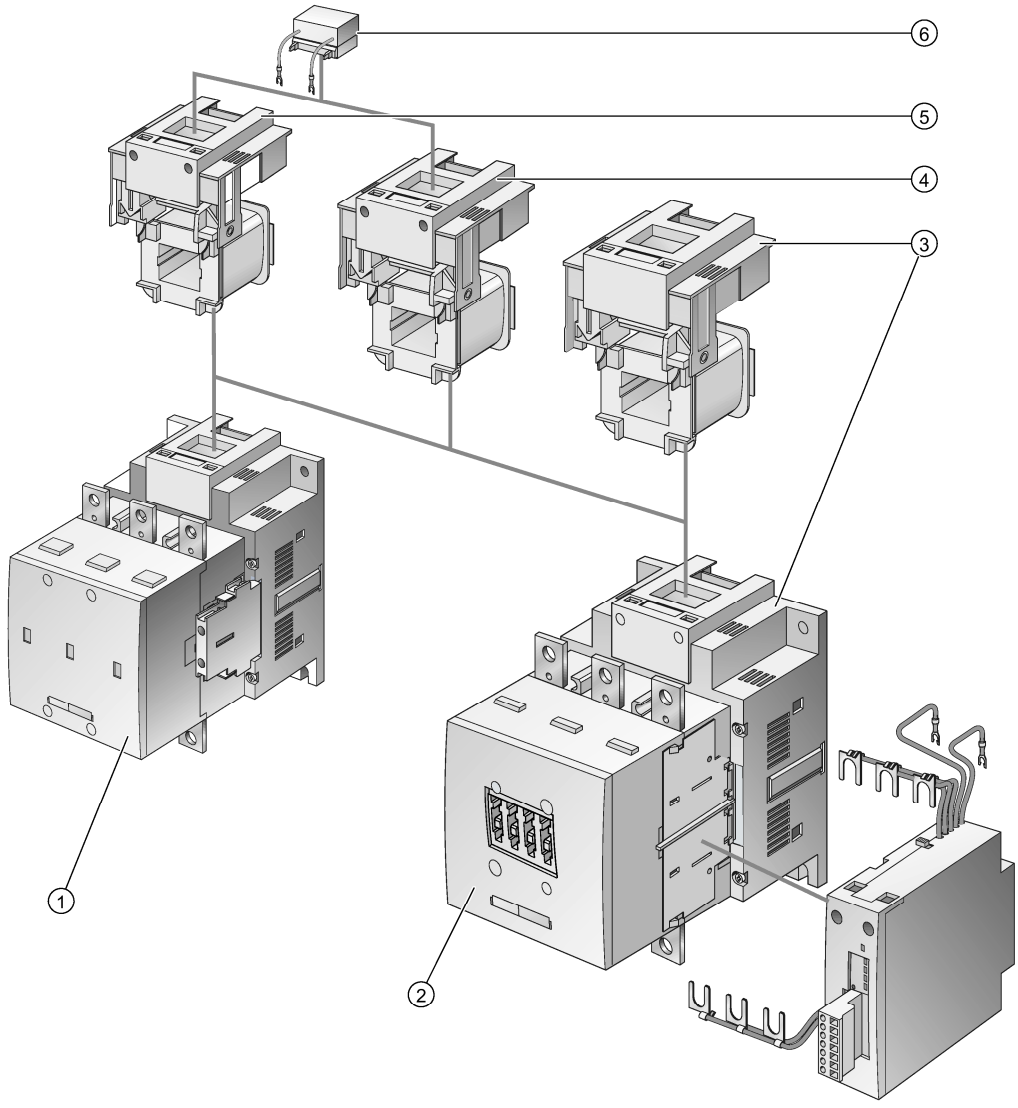

① 3RT12 vacuum contactor
② 3RT10 and 3RT14 air-break contactor
③ Withdrawable coil for contactors with remaining lifetime indicator RLT and associated electronic module
④ Withdrawable coil "electronic operating mechanism"
⑤ Withdrawable coil "conventional operating mechanism"
⑥ Surge suppressor (RC element)

The conventional operating mechanism

The control supply voltage is run direct to the solenoid coil via terminals A1/A2, and the contactor is switched on and off. After switching on, the solenoid operating mechanism is switched from pick-up excitation to holder excitation (DC economy circuit) by an in-built change-over contact.

Control supply voltage

The contactors are equipped with wide-range operating mechanisms and can thus cover a wide range of control supply voltages, for example rated operating range (U_{smin} - U_{smax}) of 110 V ... 127 V or 220 V ... 240 V. In addition, both voltage types, AC as well as DC, are covered by the same operating mechanism.

Working range

The working range is 0.8 x $U_{s\,min}$ - 1.1 x $U_{s\,max}$, for the example, this means: 0.8 x 220 V - 1.1 x 240 V.

The electronic operating mechanism

The solenoid coil is controlled by internal upstream control electronics. With the electronic operating mechanism, two different operating modes are possible. Version 1 is the classic supply and control of the contactor via the control supply voltage applied to A1/A2. In the case of version 2, only a supply voltage is applied at A1/A2. The control can be applied to the additional terminals +/- as a 24 V DC signal. This operating mode is suitable for controlling via higher-level PLC semiconductor outputs.

NOTICE
EMERGENCY OFF disconnection
Control of the coil via a semiconductor element means the control inputs (PLC) must not be used for EMERGENCY OFF purposes. For EMERGENCY OFF, the contactor must be switched off via A1/A2.

The contactors are equipped with wide-range operating mechanisms and can thus cover an even wider range of control supply voltages, for example rated operating ranges (U_{smin} - U_{smax}) of 96 V ... 127 V or 200 V ... 277 V. Both voltage types, AC as well as DC, are covered by the same operating mechanism.

Extended operating range

Compared to the conventional operating mechanism, the operating range of the control supply voltage is extended again to 0.7 ... 1.25 x U_s

Defined ON and OFF thresholds:

The control electronics monitor the applied control supply voltage for permissible lower limits within which the contactors reliably switch.

- Switching on at control supply voltage $0.8 \times U_{s\ min}$
- Switching off at control supply voltage $\leq 0.5 \times U_{s\ min}$

The hysteresis in the switching thresholds prevents the main contacts from chattering and thus prevents increased wear or welding when operated in weak, unstable networks.

The ON threshold prevents thermal overload of the coil if an excessively low control supply voltage is applied.

Bridging temporary voltage dips

Control voltage failures dipping to 0 V (at A1/A2) are bridged for up to approx. 25 ms to avoid unintentional tripping.

Note

Configuration note

When in operation in or around converter circuits, it must be noted that the control wiring to the contactor should be installed separately from the load side wiring of the converter.

Electronic operating mechanism

The electronic operating mechanism is available in 2 versions:

Version		For degree of protection
3RT1...-.N	For 24 V DC PLC output	3RT10 / 14 air-break contactors, 3RT12 vacuum contactors
3RT1...-.P	For 24 V DC PLC output or PLC relay output; with remaining lifetime signal RLT	3RT10 / 14 air-break contactors

5.3.2.2 Operating modes of electronic operating mechanism

Version of 3RT1...-.N electronic operating mechanism for PLC output 24 V DC

There are 2 ways of controlling the contactors:

- Variant 1: via A1 / A2
- Variant 2: via 24 V DC PLC output

Control via A1 / A2

The contactors are controlled conventionally by applying the control supply voltage at A1/A2 through a switching contact.

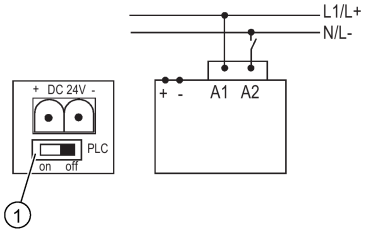

① Slide switch "OFF"

Note

The slide switch on the front side of the withdrawable coil must be in the "OFF" position (corresponds to the factory default setting). The contactor can otherwise not be operated via A1 / A2.

Operation via control signal input 24 V DC

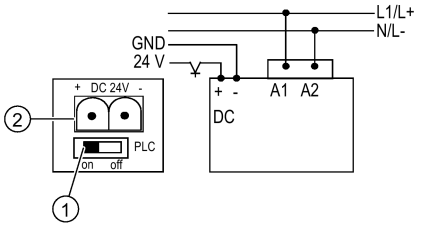

① Slide switch "ON"

② PLC input 2-pin connector

The contactor can be operated direct via an output of a controller (PLC).

- Rated voltage 24 V DC, operating range 17 to 30 V
- Current consumption ≤ 30 mA

Connecting the supply voltage

The supply voltage for the operating mechanism must be connected to A1/A2.

Note

The slide switch on the front side of the withdrawable coil must be switched to the "ON" position before commissioning (factory default setting is "OFF").

Connecting the 24 V DC control signal

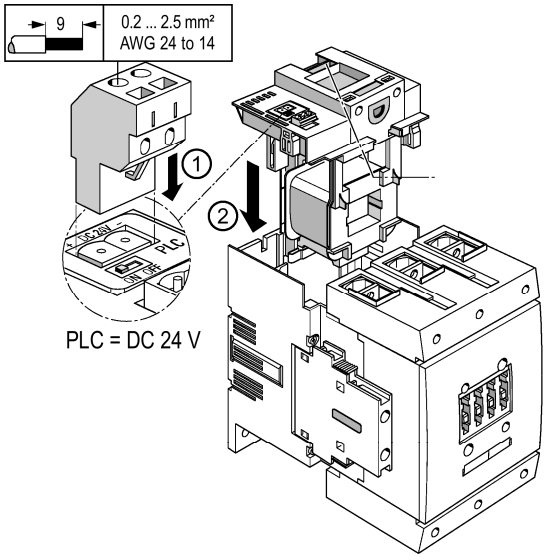

The control signal is connected via a 2-pin plug-in connection on the front side of the withdrawable coil (the spring-loaded connector is included in the scope of supply). The connector is labeled with the polarity.

5.3.2.3 Electronic operating mechanism with remaining lifetime signal

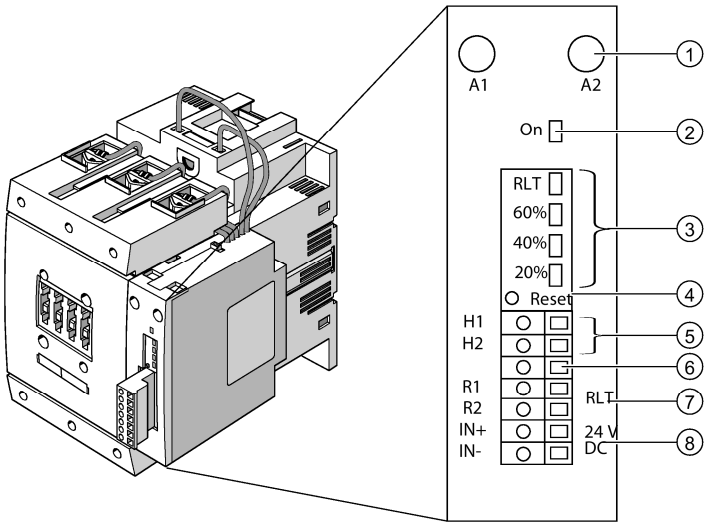

① Terminals A1/A2 for supply voltage
② LED displays: Contactor ON
③ LED displays: RLT display
- 60 % (green)
- 40 % (orange)
- 20 % (red)

④ Reset button for RLT

Connector for inputs/outputs (7--pin)

⑤ PLC relay input H1/H2
⑥ Not used
⑦ RLT relay output R1/R2
⑧ PLC input 24 V DC, IN+/IN

On the versions with remaining lifetime signal RLT, the entire electronic part is accommodated in the laterally mounted electronic module. The withdrawable part contains only the solenoid coil. It is connected via the cables run out of the laterally mounted electronic module using flat connectors to avoid confusion with other coils when changing coils. The cables connected on the input and output sides of the main current paths are for detecting the remaining lifetime signal RLT.

"Remaining lifetime RLT" signal

Upon reaching a remaining lifetime of 20 %, the "remaining lifetime RLT" signal is available at terminals R1/R2 via a floating relay contact (NO contact, hard gold-plated, enclosed) and can be input to SIMOCODE, PLC or other devices for processing, for example. Permissible current-carrying capacity of the R1/R2 relay output:

I_e/AC-15 at 24 ... 230 V: 3 A

I_e/DC-13 at 24 V: 1 A

Control

The contactors can be controlled as follows:

- via a 24 V DC control signal
- via relay outputs, e.g. of PLC, SIMOCODE.

Power supply

To supply the solenoid operating mechanism and the remaining lifetime signal with power, the control supply voltage U_s must be connected to terminals A1/A2 of the laterally mounted electronic module.

Control inputs

The control inputs of the contactor are connected to a 7-pole plug-in connection (the spring-loaded connector is part of the scope of supply).

Changeover from automatic to local control

Automatic control can be changed over to local control via inputs H1/H2. During commissioning or in the event of a fault, for example, automatic control via PLC or SIMOCODE can be deactivated and the contactor can be controlled manually.

Control with 24 V DC

Operation without coupling link, e.g. direct from PLC with 24 V DC

via control input IN+/IN–

- Current consumption ≤ 30 mA
- Operating range 17 to 30 V DC

Note

H2 and A1 are internally connected and are therefore on the same voltage potential.

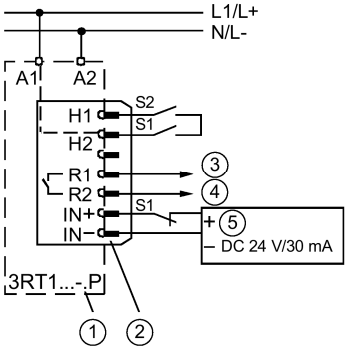

① Electronic module for 3RT1...-.P contactor
② Plug-in connection, 7-pin
③ / ④ Remaining lifetime signal 20 %
⑤ PLC output
S1 Changeover switch from automatic control via PLC semiconductor output to local control
S2 Local control option

Control via relay outputs

Control via relay outputs, e.g. of:

- PLC
- SIMOCODE

The contactor can be controlled using relay outputs via the terminals H1/H2. The relay contacts are loaded with approx. 5 mA and the control supply voltage applied to A1/A2.

Note

H2 and A1 are internally connected and are therefore on the same voltage potential.

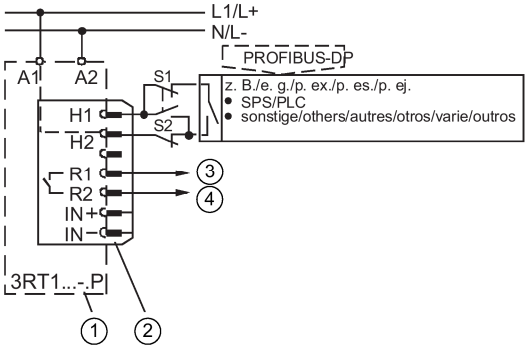

① Electronic module for 3RT1...-.P contactor

② Plug-in connection, 7-pin

③/④ Remaining lifetime signal 20 %

S1 Changeover switch from automatic control, e.g. via SIMOCODE or PLC relay output, to local control

S2 Local control option

5.3.2.4 Typical circuit diagrams

Contactor assembly with 24 V DC PLC control

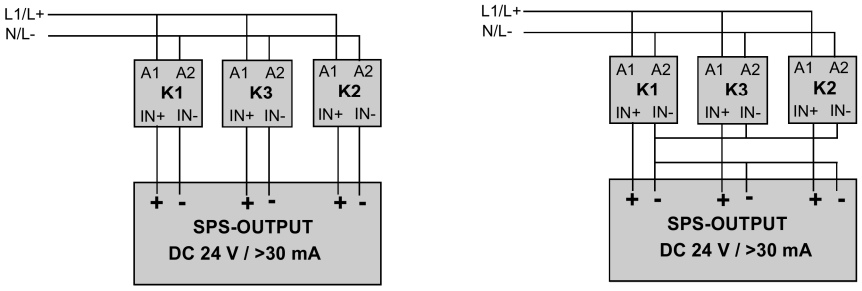

Contactor assembly with relay control

Note

- The H1 terminals must not be bridged since otherwise all contactors will switch on when only one contactor is to be controlled.
- The H2 terminals should not be bridged since otherwise the internal connection from A1 to H2 will be overloaded in the event of a fault.

Control via relay outputs with common potential

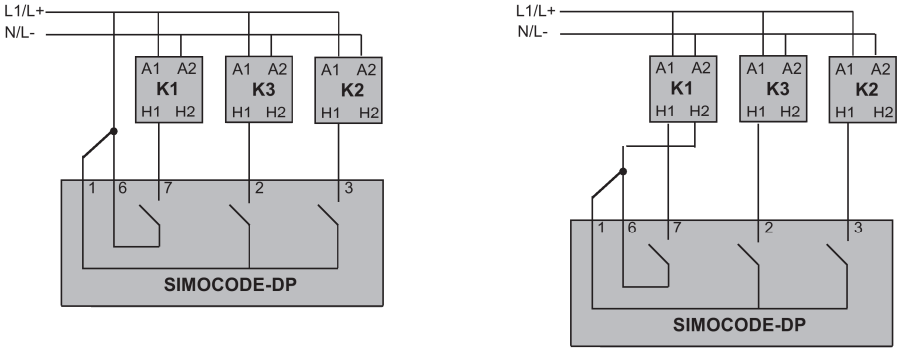

Local control via SIMOCODE

Control via galvanically isolated / floating relay outputs

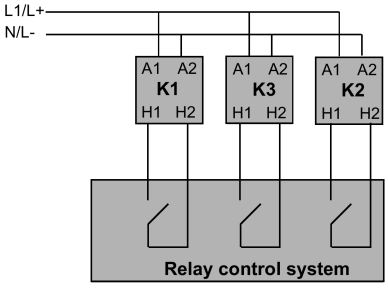

5.3.2.5 Remaining lifetime signal (RLT)

Remaining lifetime signal (RLT)

For the 3RT10 and 3RT14 air-break contactors, there are electronically controlled solenoid operating mechanisms alternatively referred to as the "remaining lifetime signal RLT" feature. The RLT function detects main contact erosion and provides visual and electrical indication of a pending contact change by the plant operator.

Function

Main contactor contacts are working parts and must be replaced in good time when the end of their service life has been reached. The degree of contact erosion and thus the electrical endurance (= number of operating cycles) depends on the loading, utilization category, operating mode, etc. Routine checks / visual inspections by maintenance personnel are needed in order to monitor the state of the main contacts. The "remaining lifetime signal" device takes over this task. It does not count the number of operating cycles (this does not provide information about contact erosion) but instead electronically identifies, evaluates and stores the actual progress of erosion of each one of the 3 main contacts, and outputs a warning when specified limits are reached. The stored data are not lost if the control voltage fails.

After replacement of the main contacts, measurement of the remaining lifetime must be reset using the "RESET" button, and then begins anew.

Alarm signals

Signaling takes place via a floating relay contact when a remaining lifetime of 20 % is reached, in other words, when the contact material is 80 % worn and replacement of the main contacts must be arranged.

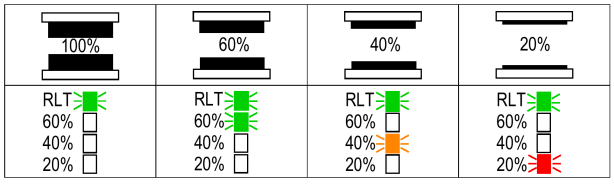

The different contact erosion states are also indicated visually on the laterally mounted electronic module of the contactor via LEDs:

- 60 % with remaining lifetime (green LED)
- 40 % (orange)
- 20 % (red)

Resetting the remaining lifetime signal (RLT)

After changing a contact, you must note the following for resetting the remaining lifetime signal:

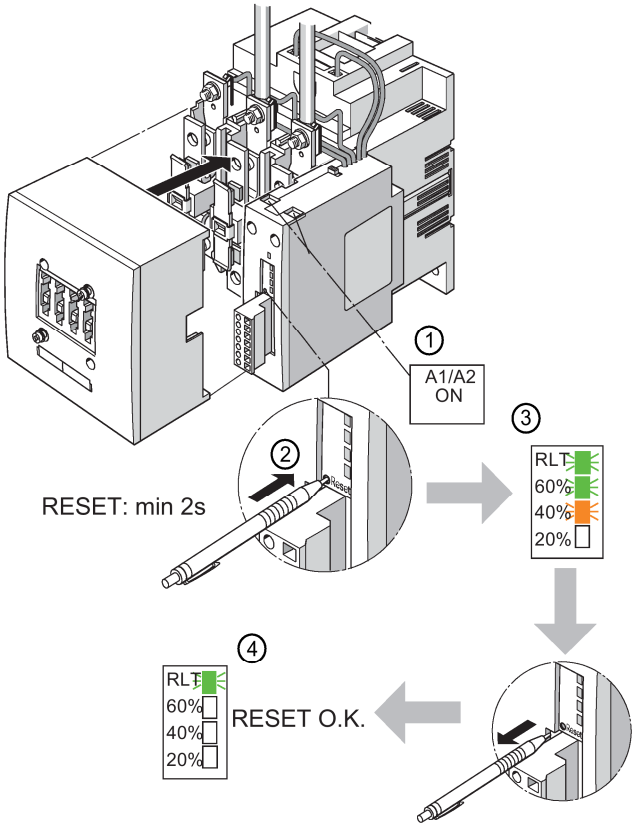

① The control supply voltage must be applied at A1 / A2 and the contactor must be switched off

② Hold down the RESET button on the laterally mounted electronic module with a ball-point pen or similar object, for approx. 2 s

③ Hold the RESET button until only the green "RLT" LED shows a light after the LED indicators have been run through

④ Reset completed

Use in rotor circuits of slip-ring motors

Note

Notes on the use of contactors with remaining lifetime signal (RLT)

For detecting contact erosion, a typical measuring parameter of the RLT function is the voltage over the main contacts of the contactor when switching off the contactor. However, depending on slip, voltage values arise in the rotor circuits that are not suitable for evaluation and that result in premature signaling of RLT.

Residual current via the main contacts

The resistance of the individual measuring circuits via the main contacts is 4.8 Mohms per current path. This high-resistance value excludes dangerous body currents or touch voltages on the load side when the contactor is switched off.

Functional switching via A1/A2

Functional switching via A1/A2 results in signaling of RLT. The control inputs (PLC) must be used for this. The system circuits are an exception here; the measured values remain saved (E^2PROM). The control inputs via PLC/AS-Interface must be used for functional switching.

5.4 Application environment

5.4.1 3RH2 contactor relays

The following information must be taken into account when planning applications involving 3RH2 contactor relays.

Degree of protection and resistance to extreme climates

3RH2 contactor relays are suitable for use in any climate. They are finger-safe according to IEC 60529. 3RH2 contactor relays have degree of protection IP 20.

Shock load and vibratory load

The 3RH2 contactor relays have been tested in terms of their shock resistance to sine pulses and rectangular pulses for AC and DC operation.

Ambient temperature

The 3RH2 contactor relays are dimensioned for operation at ambient temperatures of between -25 °C and +60 °C. The devices can be stored at temperatures within the range from -55 °C to +80 °C.

5.4.2 3RT power contactors

The following information must be taken into account when planning applications involving 3RT power contactors.

Degree of protection and resistance to extreme climates

3RT power contactors are suitable for use in any climate. They are finger-safe according to IEC 60529.

Shock load and vibratory load

The 3RT contactors have been tested in terms of their shock resistance to sine pulses and rectangular pulses for AC and DC operation.

Ambient temperature

The 3RT2 contactors are dimensioned as standard for operation at ambient temperatures of between -25 °C and +60 °C. Up to 60 °C, side-by-side mounting can be used without any restriction. The devices can be stored at temperatures within the range from -55 °C to +80 °C.

The 3RT1 contactors are designed for use in ambient temperatures from -25 °C to +60 °C. Special versions can be used from -35 °C to +70 °C.

Extended ambient temperature

Contactors can be used at higher ambient temperatures, but various constraints must be considered. The 3RT20 contactors can be operated continuously at an ambient temperature of T_a > 60 °C, taking the following points into account:

Thermal load capacity of the main current paths

The standard contactors are dimensioned for a maximum ambient temperature of T_a = 60 °C. In order to use the contactors at higher ambient temperatures of up to 70 °C, the rated operational current I_e/AC-1 or I_e/DC-1 and the switching frequency z must be reduced. The following linear dependencies can be applied here:

$$I_{e\,max.,Tu} = I_e/AC\text{-}1 \bullet \frac{60°C}{Tu} \qquad I_{e\,max.,Tu} = I_e/DC\text{-}1 \bullet \frac{60°C}{Tu}$$

$$z_{max.,Tu} = z \bullet \frac{60°C}{Tu}$$

I_e max., T_a =	Rated operational current of the contactor at increased ambient temperature, to be calculated
I_e/AC-1 or I_e/DC-1 =	Rated operational current of the contactor for respective utilization category and $T_a \leq 60$ °C
T_a =	Actual ambient temperature T_a > 60 °C

The contactors may be operated for 1 hour at an ambient temperature of up to $T_a \leq 80$ °C without reducing the permissible currents. Nevertheless, the average ambient temperature must not exceed Ta ≤ 60 °C for any 24 hour period. Note, however, that Contactors that contain electronic components or are combined with electronic accessories (e.g. integrated overvoltage attenuation, etc.) may only be operated at an ambient temperature of up to $T_a \leq 60$ °C.

Minimum clearances from adjacent components
The 3RT2 contactors are dimensioned for side-by-side mounting at temperatures of up to +60 °C. At higher temperatures a clearance of 10 mm may be required in order to ensure better heat dissipation with side-by-side mounting. With capacitor contactors, a lateral clearance of 10 mm is required for side-by-side mounting.

Operating range of the solenoid coils
All SIRIUS contactors comply with the operating range limits of 0.85 ... 1.1 x U_S (rated control supply voltage) stipulated in the standard IEC EN 60947. The majority of the devices feature an operating range from 0.8 ... 1.1 x U_S; on some versions it is 0.7 ... 1.3 x U_S. Some versions of the contactors for railway applications have an operating range from 0.7 ... 1.25 x U_s at an ambient temperature of +70 °C.

The electronics remain functional at ambient temperatures between -40 °C and +70 °C. This cannot be extended, even with reduced duty factor or lower current.

The reason for this is that some components are approved only to -40 °C, and below this they can be destroyed.

At the other extreme, with a switching transistor at the maximum permissible voltage (36.4 V or 169 V or 305 V), the temperature is already just under the destruction limit. A further increase in the ambient temperature can cause irreparable damage to the component (in the case of a transistor: short-circuit).

A microcontroller in the circuit measures the chip temperature and switches the device off if it is too high.

Using the S00, S0, S2 and S3 contactors at low ambient temperatures

The S00 to S3 contactors can be used at a minimum ambient temperature of T_a = -50 °C, but the mechanical durability will be reduced by up to 50 %. The other catalog data remains unaffected. In such instances a high switching frequency and long duty cycle are preferable to a low switching frequency and short duty cycle. Contactors which contain electronics or which are combined with electronic accessories must not be used at temperatures below T_a =-40 °C.

Service life

Using the contactors at higher ambient temperatures places a greater stress on molded parts, main current paths, and the solenoid coil. This reduces the mechanical durability and shortens the service life of the contactors. The service life is primarily influenced by the ON period. The table below shows the reduced mechanical durability and shortened service life values:

Table 5- 1 Durability and service life of 3RT20 contactors

Ambient temperature T_a	Mechanical endurance [x10^6 operating cycles]		Service life [years]
	S00	S0 … S3	S00 … S3
≤ 60 °C	30	10	20
65 °C	15	5	15
70 °C	3	1	10

The specifications for the service life apply to an ON period of 100 %.

5.4.3 Contactors for railway applications

The following information must be taken into account when planning applications involving contactors for rail applications (versions of the 3RT2 power contactors, 3RH2 contactor relays, and 3RT1 power contactors in sizes S6 to S12). All other data corresponds to that of the standard 3RT1 / 3RT2 contactors and 3RH2 contactor relays.

Touch protection

SIRIUS 3RT20 / 3RH2 and 3RT1 contactors (sizes S6 to S12) are finger-safe according to IEC 60529.

Ambient temperature

When operating contactors for railway applications (versions of the 3RT20 power contactors, 3RH21 contactor relays and 3RT10 power contactors) at the full solenoid coil operating range, the permissible ambient temperature is between -40 °C and +70 °C.

Note

Continuous operation at temperatures > +60 °C reduces the mechanical durability, the current carrying capacity of the current paths, and the switching frequency.

Extended operating range of the solenoid coil

An important railway requirement as regards SIRIUS contactors is the extended operating range of the solenoid coil (0.7 ... 1.25 x U_S). This must be taken into account when selecting devices for railway applications.

5.4.4 Installation altitude

The following restrictions apply for the use of the 3RT1, 3RT2, 3RH1, and 3RH2 contactors at installation altitudes higher than 2000 m* above sea level.
These specifications relate to a maximum ambient temperature of 40 °C.

- Installation altitudes up to 2500 m above sea level:
  - Reduction in rated insulation voltage to 0.93 x U_i
  - Reduction in current load to 0.93 x I_n
  - Setting the motor rated current to 1.02 x I_e
- Installation altitudes up to 3000 m above sea level:
  - Reduction in rated insulation voltage to 0.88 x U_i
  - Reduction in current load to 0.88 x I_n
  - Setting the motor rated current to 1.05 x I_e
- Installation altitudes up to 4000 m above sea level:
  - Reduction in rated insulation voltage to 0.79 x U_i
  - Reduction in current load to 0.78 x I_n
  - Setting the motor rated current to 1.1 x I_e
- Installation altitudes up to 5000 m above sea level:
  - Reduction in rated insulation voltage to 0.75 x U_i
  - Reduction in current load to 0.7 x I_n
  - Setting the motor rated current to 1.15 x I_e

Note

Due to the influence of reduced air pressure, these specifications do not apply for devices in vacuum technology.

* According to EN60947-1, 6.1.2, altitude:

The altitude of the installation location must not exceed 2 000 m above sea level.

Note

For plants at higher altitudes, the reduced insulation strength and the reduced cooling effect of the air must be taken into consideration. For electrical devices that are to operate under such conditions, the design and application must be agreed between manufacturer and user.

5.5 Switching motorized loads

Applications

The 3RT10 / 3RT20 3-pole motor contactors or the 3RT233.-.....-4AA0 4-pole motor contactors can be used for switching three-phase motors.

The main contacts of the 3RT10 / 3RT20 / 3RT233.-.....-4AA0 contactors switch in air under atmospheric conditions.

In contrast to these contactor types, the contact gaps of the 3RT12 vacuum contactors are contained in hermetically enclosed vacuum interrupters.
No open arc or arcing gases arise. A minimum clearance to the grounded parts is not required.
The particular benefit of 3RT12 vacuum contactors is that their electrical endurance is at least twice as long as that of 3RT10 contactors. The 3RT12 vacuum contactors are therefore especially well suited to frequent switching (utilization category AC-3, AC-4) in inching / mixed operation, e.g. in crane control systems.

Note

3RT12 vacuum contactors are fundamentally unsuitable for switching DC voltage.

The following graphic shows the cross-section of a vacuum interrupter.

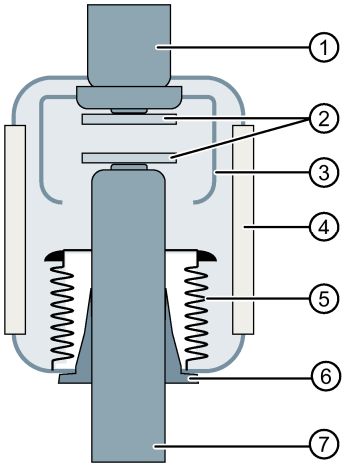

① Fixed contact
② Contacts
③ Arc chute
④ Ceramic insulator
⑤ Metal bellows
⑥ Locating bearing
⑦ Movable contact

Connection to the automation level

3RA28 or 3RA27 function modules can be mounted on the front of 3RT20 power contactors to provide additional functionalities (e.g. star-delta (wye-delta) functionality) and enable a connection to be established with a controller via IO-Link or AS-Interface. If 3RA27 function modules are used, special versions of the 3RT2 power contactors (3RT2...-....-0CC0 at the 13th and 16th digits of the article number) that facilitate direct voltage tapping of the main current paths must be used. These contactors with voltage tapping are available with a 24 V DC solenoid coil. The coil is controlled via the function module.

Variants

The performance range of 3 to 55 kW / 400 V (utilization category AC-3) is covered by the 3RT2 contactors (sizes S00 to S3) with a width of 45 mm to 70 mm. In size S0, the installation depth for contactors with DC and AC/DC solenoid systems is 10 mm larger than for versions with an AC solenoid system.
The performance range of 55 to 250 kW / 400 V (utilization category AC-2, AC-3 and AC-4) is covered by the 3RT1 contactors (sizes S6 to S12) with a width of 120 mm to 160 mm.

Rated powers

A single size covers several versions with different standard motor ratings. The specified power (in kW) refers to the output power on the motor shaft (in accordance with the motor's nameplate).

The maximum power value of the 3RT233.-.....-4AA0 4-pole power contactors is 22 kW at a voltage of 400 V.

All specified rated powers and rated currents refer to an ambient temperature of 60 °C.

3RT20 power contactors

Article number (size S00)	P/AC-3/400 [kW]	I_e/AC-3 [A] to 400 V	Width [mm]
3RT2015	3	7	45
3RT2016	4	9	
3RT2017	5.5	12	
3RT2018	7.5	16	

Article number (size S0)	P/AC-3/400 [kW]	I_e/AC-3 [A] to 400 V	Width [mm]
3RT2023	4	9	45
3RT2024	5.5	12	
3RT2025	7.5	17	
3RT2026	1 1	25	
3RT2027	15	32	
3RT2028	18.5	38	

Article number (size S2)	P/AC-3/400 [kW]	I_e/AC-3 [A] to 400 V	Width [mm]
3RT2035	18.5	40	55
3RT2036	22	50	
3RT2037	30	65	
3RT2038	37	80	

Article number (size S3)	P/AC-3/400 [kW]	I_e/AC-3 [A] to 400 V	Width [mm]
3RT2045	37	80	70
3RT2046	45	95	
3RT2047	55	110	

3RT10 power contactors

Article number (size S6)	P/AC-3/400 [kW]	I_e/AC-3 [A] to 500 V	Width [mm]
3RT1054	55	115	120
3RT1055	75	150	
3RT1056	90	185	

Article number (size S10)	P/AC-3/400 [kW]	I_e/AC-3 [A] to 500 V	Width [mm]
3RT1064	110	115	145
3RT1065	132	150	
3RT1066	160	185	

Article number (size S12)	P/AC-3/400 [kW]	I_e/AC-3 [A] to 500 V	Width [mm]
3RT1075	200	400	160
3RT1076	250	500	

3RT12 vacuum contactors

Article number (size S10)	P/AC-4/400 [kW]	I_e/AC-3 [A] to 1000 V	Width [mm]
3RT1264	110	225	145
3RT1265	132	265	
3RT1266	160	300	

Article number (size S12)	P/AC-4/400 [kW]	I_e/AC-3 [A] to 1000 V	Width [mm]
3RT1275	200	400	160
3RT1276	250	500	

Performance increase

The easy expansion option when it comes to controller building is of advantage when configuring. In many application cases, when the motor power rating is increased, the space is also sufficient for the contactor with the next-higher performance level.

Attenuation of the switching overvoltage of the 3RT vacuum contactors

To attenuate overvoltages and to protect the insulation of the motor winding from multiple re-ignitions when switching off three-phase motors, we recommend you connect 3RT12 vacuum contactors (2T1 / 4T2 / 6T3) on the outgoing side with the main current path attenuation module (RC element and varistor). This circuit is not necessary when using motors whose insulation is designed for operation on converters.

NOTICE
The main current path circuit is not required for operation in circuits with converters. The circuit can be destroyed by the voltage peaks and harmonics, resulting in phase-to-phase short circuits.

Main current path surge attenuation module for vacuum contactors

The main current path attenuation module is available for the following rated operational voltages:

- U_e <= 690 V: 3RT1966-1PV3
- U_e <= 1000 V: 3RT1966-1PV4

The main current path attenuation module is connected separately from the contactor over a cable of a length of approximately 35 cm on the outgoing terminal of the 2T1 / 4T2 / 6T3 contactor.

5.6 Switching resistive loads

Applications

The following contactor versions can be used to switch resistive loads according to utilization category AC-1:

- 3-pole 3RT20 contactors (sizes S00 to S3)
- 4-pole 3RT23 contactors (sizes S00 to S2)
- 3-pole 3RT24 contactors (size S3) and 3RT14 (size S6 to S12)

These contactors feature 3 / 4 NO contacts as their main contacts.

Typical applications:

- Switching resistive loads
- Isolation of systems with ungrounded or poorly grounded neutral conductors.
- System switchover, where alternative AC power supplies are present.
- For inductive loads as contactors which conduct the current but do not have to perform switching (e.g. if used in the vicinity of frequency converters).
- Switching mixed loads in distribution systems.

Configuration note

The 3RT10 contactor series for switching motors also has utilization category AC-1. However, the 3RT14 AC-1 contactor is the more cost-effective alternative for this special application.

Versions

The device bases are identical within each device size. In size S0, the installation depth for contactors with a DC solenoid system is 10 mm larger than that for versions with an AC solenoid system. Within the respective size (S2 to S12) all operating mechanism types have the same installation depth.

Rated powers

A single size covers several versions with different rated operational currents I_e. All 3-pole 3RT20 contactors and 4-pole 3RT23 contactors of sizes S00 to S2 are equipped with AC or DC solenoid systems.

All specified rated powers and rated currents refer to an ambient temperature of 40 °C.

3RT20 contactors

Article number (size S00)	I_e/AC-1 [A] to 690 V	Width [mm]
3RT2015	18	45
3RT2016	22	
3RT2017	22	
3RT2018	22	

Article number (size S0)	I_e/AC-1 [A] to 690 V	Width [mm]
3RT2023	40	45
3RT2024		
3RT2025		
3RT2026		
3RT2027	50	
3RT2028		

Article number (size S2)	I_e/AC-1 [A] to 690 V	Width [mm]
3RT2035	60	55
3RT2036	70	
3RT2037	80	
3RT2038	90	

Article number (size S3)	I_e/AC-1 [A] to 690 V	Width [mm]
3RT2045	125	70
3RT2046	130	
3RT2047	130	

3RT23 contactors

Article number (size S00)	I_e/AC-1 [A] to 690 V	Width [mm]
3RT2316	18	45
3RT2317	22	

Article number (size S0)	I_e/AC-1 [A] to 690 V	Width [mm]
3RT2325	35	60 (screw connection) 61 (spring-loaded connection)
3RT2326	40	
3RT2327	50	

Article number (size S2)	I_e/AC-1 [A] to 690 V	Width [mm]
3RT2336	60	75
3RT2337	110	

3RT24 contactors

Article number (size S3)	I_e/AC-1 [A] to 690 V	Width [mm]
3RT2446	140	70
3RT2448	160	

3RT14 contactors

Article number (size S6)	I_e/AC-1 [A] to 690 V	Width [mm]
3RT1456	275	120

Article number (size S10)	I_e/AC-1 [A] to 690 V	Width [mm]
3RT1466	400	145

Article number (size S12)	I_e/AC-1 [A] to 690 V	Width [mm]
3RT1476	690	160

5.7 Changing the polarity of hoisting gear motors

Applications

The 4-pole 3RT25 contactors (2 NO contacts and 2 NC contacts) can be used for changing the polarity of hoisting gear motors.

Note

The individual device for pole changing is not suitable for reversing operation.

Versions

The entire performance range of 3 to 11 kW/400 V (utilization category AC-3) is covered by two sizes, S00 and S0, each with a width of 45 mm. The performance range of 18.5 kW to 22 kW/400 V (utilization category AC-3) is covered by size S2. All 4-pole 3RT25 contactors of sizes S00 to S2 are equipped with AC or DC solenoid systems. The device footprints are the same for all operating mechanism types. In size S0, the installation depth for contactors with a DC solenoid system is 10 mm larger than that for versions with an AC solenoid system. In the case of size S2, all operating mechanism types have the same installation depth.

Rated powers

The performance range of the 3RT25 4-pole power contactors in size S00 extends up to 5.5 kW at a voltage of 400 V. In size S0, the maximum power value is 11 kW at a voltage of 400 V. In size S2, the maximum power value is 22 kW with a voltage of 400 V. All specified rated powers and rated currents refer to an ambient temperature of 60 °C.

3RT25 contactors

Article number (size S00)	I_e/AC-1 [A] to 690 V	Width [mm]
3RT2516	18	45
3RT2517	22	
3RT2518	22	

Article number (size S0)	I_e/AC-1 [A] to 690 V	Width [mm]
3RT2526	40	60 (screw connection) 61 (spring-loaded connection)

Article number (size S2)	I_e/AC-1 [A] to 690 V	Width [mm]
3RT2535	60	75
3RT2536	70	

5.8 Switching in the auxiliary circuit

Applications

The 3RH2 contactor relays can be used for switching in the auxiliary circuit (controlling, signaling, interlocking).

Thanks to their high contact reliability at low voltages and currents, the 3RH2 contactor relays are suitable for solid-state circuits down to a lower limit of 1 mA at 17 V.

Versions

3RH2 contactor relays are available in a width of 45 mm (size S00) and can be ordered with solenoid coils for AC or DC operation. The external design of the 4-pole 3RH21 contactor relay is identical to that of the motor contactor in size S00 (45 mm width). In addition, 8-pole 3RH22 contactor relays can be supplied with a permanently mounted auxiliary switch block on the front.

Rated powers

The performance range of the 4-pole 3RH21 contactor relays in size S00 extends up to 10 A at a voltage of up to 230 V in utilization category AC-15/AC-14 and up to 10 A at 24 V DC in utilization category DC-12/DC-13.

Auxiliary switch blocks

The 3RH2 contactor relays can be expanded by up to 4 contacts via attachable auxiliary switch blocks.

Special version: 3RH24 latched contactor relays

In the event of a short circuit in the low-voltage system or if large drive motors are switched on directly, the control supply voltage for the contactor relays may drop out or fall below the permissible tolerance for a brief period. To guarantee continued operation, the 3RH24 special version of the contactor relays, with mechanical latching, may be used. These contactor relays latch mechanically following switch-on and then remain switched on even if there is a voltage failure. The contactor relay can be released either electrically by means of a release solenoid, or manually by actuating the latched contactor. When the voltage is recovered, the storage properties of the contactor relays mean that the production program can be resumed straightaway without any resetting time. The contactor coil and the coil of the release solenoid are both dimensioned for continuous operation. The power input is the same for the contactor coil and the release coil. The number of auxiliary contacts can be extended by means of auxiliary switch blocks on the front (up to 4 poles).

5.9 Switching of capacitive loads

Applications

3RT26 3-pole capacitor contactors can be used to switch capacitive loads.

Besides switching power capacitors in reactive-current compensation systems, they are also used to switch on converters.

Capacitor contactors are suitable for capacitors with and without reactor protection.

Switching of capacitive loads

The inrush current of a capacitor increases with the short-circuit power of the line.

The capacitor's inrush current is at its highest when it is connected directly to the transformer or in parallel with existing capacitors. This is similar to capacitor banks for reactive power compensation, for example, when a capacitor is connected in parallel to existing capacitors.

The charging current is taken not only from the line. Current is additionally drawn from the parallel-connected capacitors.

To meet this requirement, 3RT26 capacitor contactors have precharging resistors to reduce the inrush current. They are designed to convey the inrush current in such applications, and are weld-resistant for peak inrush currents in accordance with the technical data.

In the case of 3RT26 capacitor contactors, the precharging resistors form a component part of the contactor.

The precharging resistors are activated via leading auxiliary contacts before the main contacts close. During switching, after attenuation of the peak current, they are decoupled again.

Attenuation of the inrush current peaks also reduces interfering harmonics in the supply.

The precharging resistors are separately protected reliably against detrimental mechanical influences by the robust precharging resistor enclosure.

Thanks to the innovated, technical principle of precharging resistor decoupling, the 3RT26 capacitor contactors have an enhanced useful life in comparison with their predecessor.

Reference

Information	can be found in the chapter ...
About operation with frequency converters	Configuration information for use downstream of frequency converters (Page 136)

Versions

The entire performance range from 12.5 to 75 kvar / 400 V (utilization category AC-6b) is covered by three sizes S00 to S2, each with a width of 45 or 55 mm.

The device footprints are the same for all operating mechanism types. In size S0, the installation depth for contactors with DC and AC/DC solenoid systems is 10 mm larger than for versions with an AC solenoid system. The available power quantities of the 3RT26 have been increased.

Auxiliary switches

The diversity of the available auxiliary switches has been increased according to the table for 3RT26 capacitor contactors in comparison with the predecessor.

For size S2, all freely available auxiliary switches are implemented by means of lateral auxiliary switch blocks.

The following table shows the standard versions available for 3RT26. Other versions are available on request.

Devices with 2NC are now consistently available in all power quantities.

Size	Possible versions	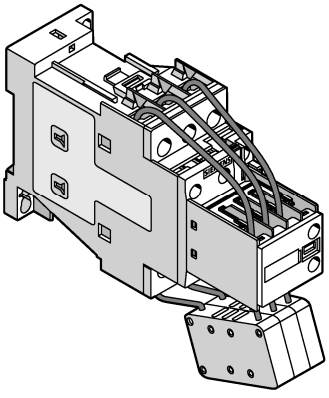	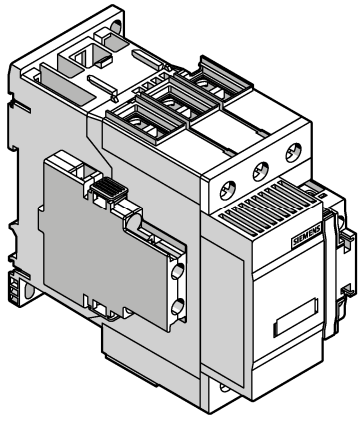
		On the front[1)]	Lateral [2)]
		4-pole	2-pole
S00	2NC	1NC in the precharging block, 1NC in the basic unit	---
S00	1NC/1NO	1NC in the precharging block, 1NO in the basic device	---
S0	2NC/1NO	1NC in the precharging block, 1NC/1NO in the basic device	---
S2	2NC	---	2NC
S2	1NC/1NO	---	1NC/1NO

1) For S00 and S0 capacitor contactors with an auxiliary switch block on the front, additional auxiliary switch blocks cannot be mounted on the side.

2) Maximum of one lateral auxiliary switch block for size S2.

Rated powers

A single size covers several versions with different rated operational currents I_e. The performance range of the 3-pole 3RT26 capacitor contactors in size S00 reaches 12.5 kvar at a voltage of 400 V. In size S0, the range extends to 33.3 kvar at a voltage of 400 V. In size S2, the maximum power value is 75 kvar at 400 V.
The maximum rated operational voltage is 690 V. At higher operational voltages, the rated powers increase as listed in the technical specifications.
All specified rated powers and rated currents refer to an ambient temperature of 60 °C. The capacitor contactors are available with the performance levels 12.5 kvar (S00), 16.7 kvar (S0), 20 kvar, 25 kvar (S0), 33 kvar (S0 with infeed terminal), 50 kvar (S2) and 75 kvar (S2) at 400 V.

Representation of the making operation

Single-phase representation of maximum capacitor inrush currents when energizing a 50 kvar capacitor at 400 V 50 Hz to an energized capacitor bank of 250 kvar without use of reactors (inductors)

1. Energizing with contactor (without precharging)

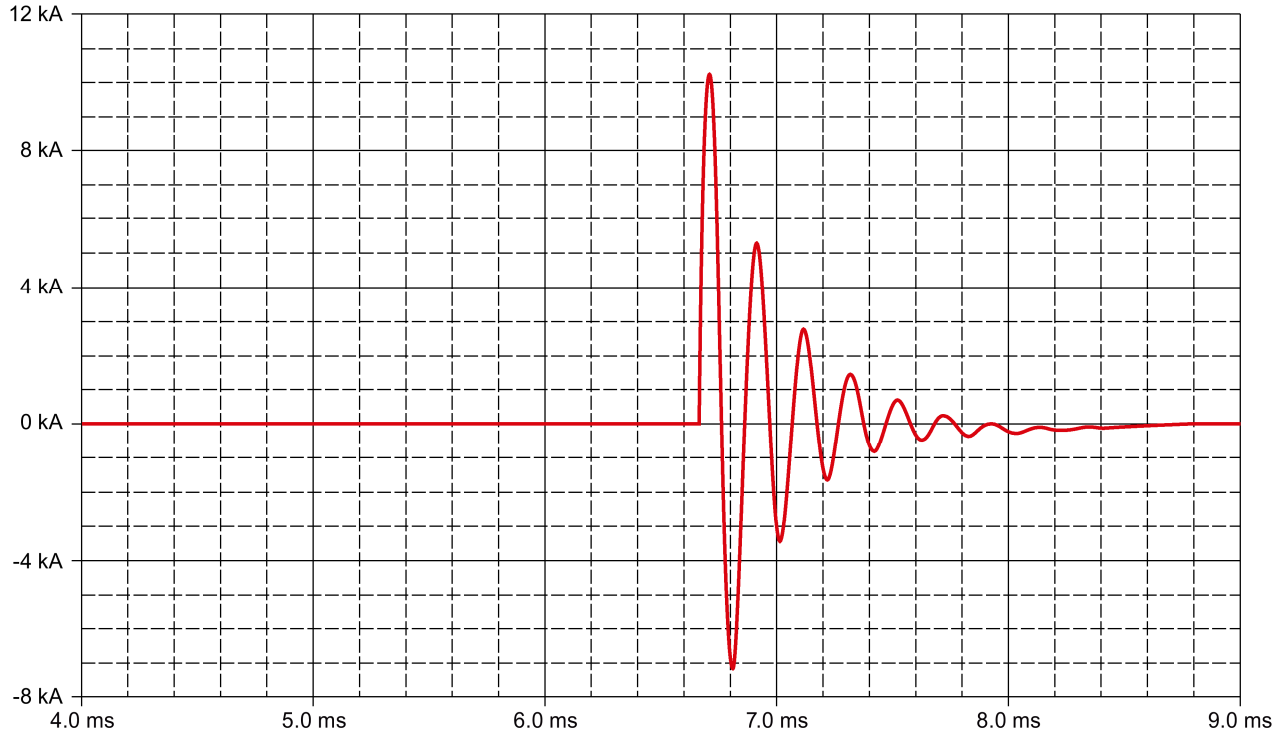

Result: The maximum inrush current peak can reach values in excess of 10 kA.

2. Energizing with a 3RT2636 capacitor contactor (with precharging)

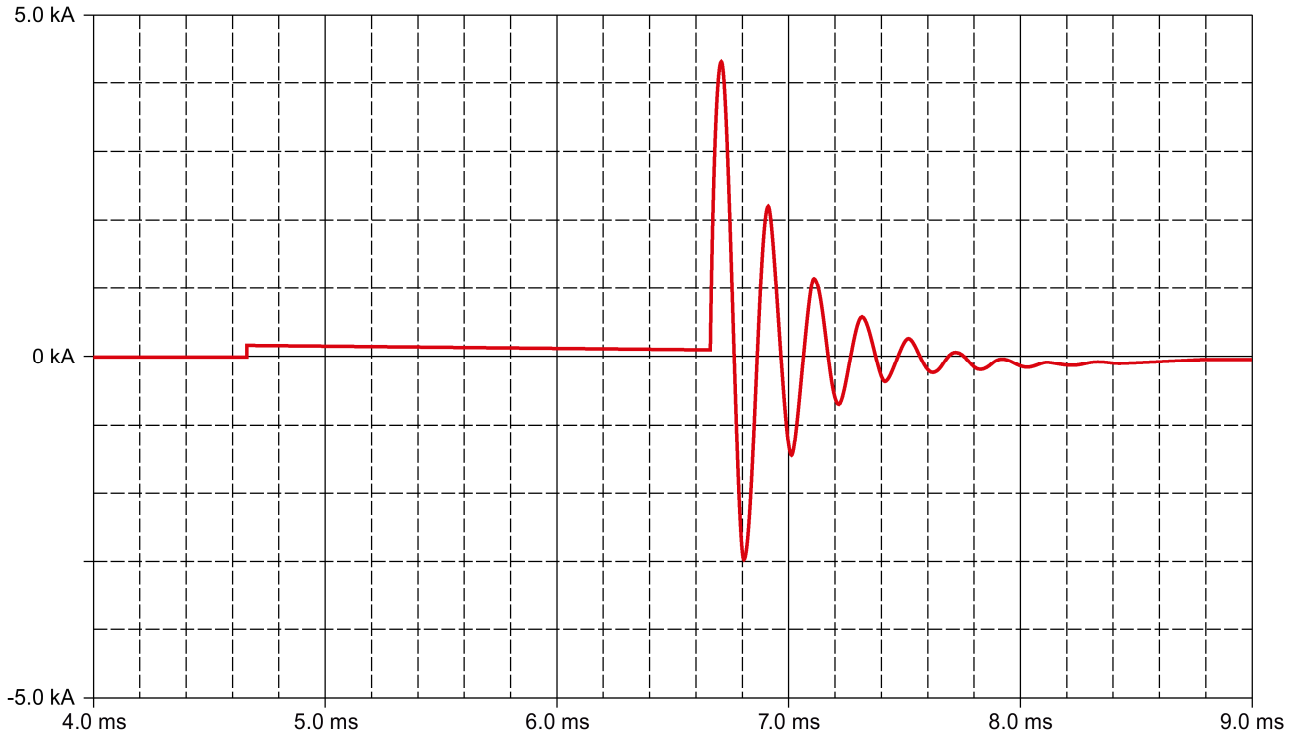

Result: The maximum inrush current peak can be reduced to less than 5 kA (depending on precharging).

Conclusion:

With 3RT26 capacitor contactors, it is possible to directly energize capacitors even without the use of reactors. This means that a high useful life of the contacts is achieved without contacts failing prematurely due to contact welding, as conventional contactors can, even without the installation of reactors.

Note

Capacitor energizing was examined at a maximum of the 5-fold parallel load and the useful life checked.

Warning notices

⚠ DANGER

Hazardous voltage. Will cause death or serious injury.

Turn off and lock out all power supplying this device before working on this device.

⚠ CAUTION

Danger of personal injury:

- Do not operate manually
- Do not carry out repairs on faulty contactors

NOTICE

Danger of material damage

To prevent the contactors from being destroyed, please follow these instructions:

- Do not exceed the permissible number of switching operations
- Do not close the contactors when the capacitors are loaded
- Do not operate the contactors unless the precharging resistors are connected
- Do not use any undefined or faulty control voltage (e.g. if control voltage is drawn from the main circuit without a control transformer)
- After short-time interruptions of the control voltage, do not energize capacitors that have not yet discharged
- Do not operate manually for function test

NOTICE

- Switch to discharged capacitors only!
- Do not operate manually for a function test.
- The precharging resistors must not be removed as otherwise the contacts will be damaged during switching operations with load.
- The enclosure of the precharging resistors heats up during the making operation.

Once the main contacts have closed, the temperature rise of the precharging resistors is stopped because the auxiliary contacts decouple. However, as it cannot be ruled out that critical overheating may occur in the event of a fault, it is recommended that you select only appropriate materials for use in the vicinity of the capacitor contactors, e.g. flame-retardant and self-extinguishing materials.

Note

Recommendations for configuration/operation:

- Use the recommended conductor cross-sections only
- Avoid connecting leads that are too short
- Wire capacitors with discharging reactors instead of discharging resistors to avoid energizing of still charged capacitors in the event of a disruption of the control voltage.
- Prevent manual operation of the capacitor contactors under load voltage. This can lead to destruction of the precharging resistors and to welding of contacts.
- Implement circuitry measures to ensure compliance with the required idle times after deactivation or short-time interruption of the control voltage. Inadmissibly short idle times or inadmissibly high switching frequency can produce overloading of the integrated precharging resistors or welding of the contacts if the necessary discharging time of the capacitors is not observed.
- Check connection terminals at least once every year for preserved clamping force and retighten them, if necessary.
- Observation of the effective capacitor current for a period of 24 hours is recommended so as to be able to ensure that the permissible average current load of the contactor's current paths (1.3 x Ie AC-6b) is not exceeded.
- Measurement of the harmonic component of the capacitor current is recommended. If the rms value of the current downstream of the supply transformer, or a proportional converter load, is higher than 20 % then suitable measures must be taken (connection of reactors to the capacitors, or installation of filter circuits).
- To avoid jeopardizing systems and persons, defective capacitor contactors are not permitted to be repaired.
- The minimum idle time is derived from the maximum switching frequency as follows:

$$Tp_{min} = \frac{1}{z}$$

Tp_{min} = Minimum idle time

z = Maximum switching frequency

Table 5- 2 Max. switching frequency z in operating cycles/hour at I_e/AC-6b and for

Type	**3RT2617**	**3RT2625**	**3RT2626**	**3RT2627**	**3RT2628**	**3RT2636**	**3RT2637**
Size	**S00**	**S0**				**S2**	
230 V, 50/60 Hz 1/h	180	180	100	100	100	100	100
400 V, 50/60 Hz 1/h	180	180	100	100	100	100	100 / 80[1)]
480 V, 50/60 Hz 1/h	180	180	100	100	70	60	50
500 V, 50/60 Hz 1/h	180	180	100	100	65	55	45
600 V, 50/60 Hz 1/h	180	180	100	100	45	40	32
690 V, 50/60 Hz 1/h	180	150	100	72	36	30	25

1) operating cycles/h: 100 with AC operation; 80 with AC/DC operation

5.10 Contactors with extended operating range

5.10.1 Contactors for railway applications

5.10.1.1 Contactors for rail applications according to IEC 60077-2

These contactor types are equipped with electronic coil control.

The following conditions of use apply:

- They are approved for operation within the temperature range -40 °C to +70 °C.
- The operating range of the contactor operating mechanism is 0.7 - 1.25 x U_s referred to the rated value for operation on DC voltage.
- The operating mechanisms with rated voltages of 24 V DC, 72 V DC and 110 V DC are available by preference.
- Compared to the electronic operating mechanisms of the 3RT1 standard contactors, the operating mechanisms of sizes S6-S12 are equipped with 2 operating modes for direct control.

Size	Article number	Power rating of three-phase motors [kW] at 400 V
S00	3RT2.1.-.X...-0LA2	5.5
S0	3RT2.2.-.X...-0LA2	18.5
S2	3RT2.3.-.X...-0LA2	37
S3	3RT2.4.-.X...-0LA2	55
S6	3RT1.5.-.X...-0LA2	90
S10	3RT1.6.-.X...-0LA2	160
S12	3RT1.7.-.X...-0LA2	250

The above-listed contactors have a supplementary approval according to IEC 60077 and are thus optimized for use in rail applications.

The following contactor relays have the described approval and operating mechanism configuration:

- Article No.: 3RH2…-.X...-0LA2

The switching capacity data correspond to those of the 3RH2 standard coupling relays.

Other contactors with extended operating range

As well as the contactors with electronic operating mechanisms approved according to IEC 60077-2, contactors and contactor relays with conventional operating mechanisms and series resistors in the form of a coil circuit are also available. These devices have an operating range of 0.7 -1.25 x U_s, and a temperature range of -40 °C to +70 °C.

The series resistor is installed in an attached module. The NC auxiliary contact is integrated into the basic unit and is already fully wired. Expansion with 4-pole auxiliary switches on the front is possible for contactors and contactor relays. The contactors can be additionally expanded with lateral auxiliary switches.

Size	Article number	Power rating of three-phase motors [kW] at 400 V
-	3RH2122-2K.40-0LA0	-
S00	3RT201.-2K.42-0LA0	5.5

Coupling relays

In sizes S00 and S0, coupling relays (motor contactors with contactor relays) with the extended operating range 0.7 - 12.5 x U_s are additionally available.

The coupling relays in size S0 are connected with varistors.

For a temperature range of 60 °C to 70 °C, the minimum clearance is 10 mm.

It is not possible to fit the 3RH coupling relays with auxiliary switches.

Size	Article number	Power rating of three-phase motors [kW] at 400 V
-	3RH2…-2L…	-
S00	3RT2.1.-2K…	5.5
S0	3RT2.2.-2K…	15

5.10.1.2 Operating modes of electronic operating mechanism

Version of 3RT1...-.N electronic operating mechanism for PLC output 24 V DC - 110 V DC

There are 2 ways of controlling the contactors:

- Variant 1: via A1 / A2
- Variant 2: via 24 V DC - 110 V DC PLC output

Control via A1 / A2

The contactors are controlled conventionally by applying the control supply voltage at A1/A2 through a switching contact.

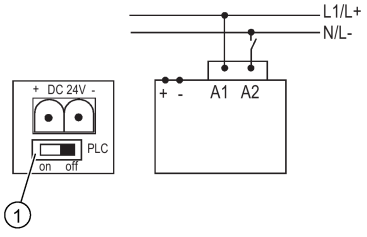

① Slide switch "OFF"

Note

The slide switch on the front side of the withdrawable coil must be in the "OFF" position (corresponds to the factory default setting). The contactor can otherwise not be operated via A1 / A2.

Operation via control signal input 24 V DC- 110 V DC

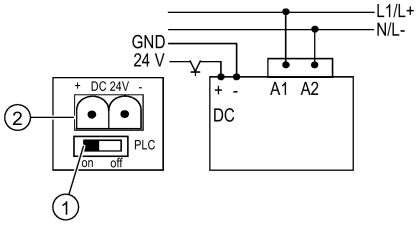

① Slide switch "ON"
② PLC input 2-pin connector

The contactor can be operated direct via an output of a controller (PLC).

- Rated voltage 24 V DC - 110 V DC
- Current consumption ≤ 30 mA

Connecting the supply voltage

The supply voltage for the operating mechanism must be connected to A1/A2.

Note

The slide switch on the front side of the withdrawable coil must be switched to the "ON" position before commissioning (factory default setting is "OFF").

Connecting the control signal

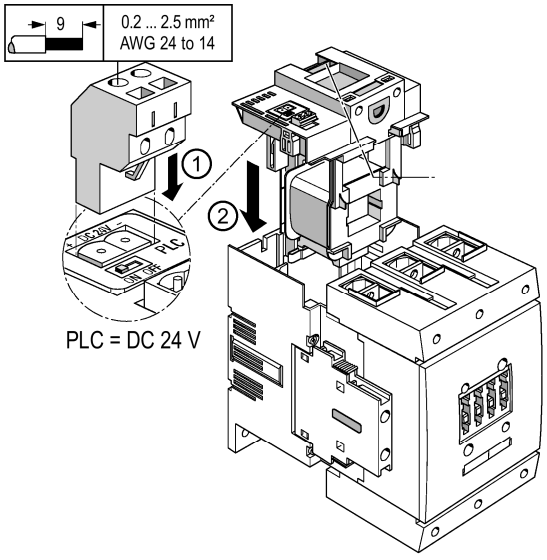

The control signal is connected via a 2-pin plug-in connection on the front side of the withdrawable coil (the spring-loaded connector is included in the scope of supply). The connector is labeled with the polarity.

5.10.2 Coupling relays

Applications

The coupling relays (24 V DC solenoid coil) have been adapted to the specific demands associated with system-compatible interaction with electronic controls, thanks to their extended operating range and reduced coil power.

These are versions of the 3RT20/3RH21 contactor ranges, which are characterized by the following features:

		Wide voltage range of the solenoid coil							
Coupling relay version	Size	0.7 ... 1.25 x U_S		0.8 ... 1.85 x U_S		0.7 ... 1.20 x U_S		0.8 ... 1.20 x U_S	
		Switch-on power = holding power	Article number	Switch-on power = holding power	Article number	Switch-on power = holding power	Article number	Switch-on power = holding power	Article number
3RH21 contactor relay	S00	2.8 W at 24 V	3RH21..-.HB40 (without RC circuit) 3RH21..-.JB40 (with diode) 3RH21..-.KB40 (with suppressor diode)	1.6 W at 24 V	3RH21..-.MB40-0KT0 (without RC circuit) 3RH21..-.VB40 (with diode) 3RH21..-.WB40 (with suppressor diode)	--		--	

		Wide voltage range of the solenoid coil							
Coupling relay version	**Size**	**0.7 ... 1.25 x U_S**		**0.8 ... 1.85 x U_S**		**0.7 ... 1.20 x U_S**		**0.8 ... 1.20 x U_S**	
		Switch-on power = holding power	**Article number**	**Switch-on power = holding power**	**Article number**	**Switch-on power = holding power**	**Article number**	**Switch-on power = holding power**	**Article number**
3RT20 motor contactor	S00	2.8 W at 24 V	3RT201.-.H. (without RC circuit) 3RT201.-.J. (with diode) 3RT201.-.K. (with suppressor diode)	1.8 W at 24 V	3RT201.-.M. (without RC circuit) 3RT201.-.V. (with diode) 3RT201.-.S. (with suppressor diode)	--		--	
	S0	4.5 W at 24 V	3RT202.-1KB40 (with varistor)	--		--		--	
	S2	--	--	--		1.0 W at 24 V	3RT203.-.KB4. (with varistor)	--	
	S3	--	--	--		--	--	0.9 W at 24 V	3RT204.-.KB4.

Note

The 3RT20/3RH21 coupling relays cannot be expanded by means of auxiliary switch blocks.

5.10.2.1 Technical background information

The operating range of the coil for coupling relays covers a voltage range of 0.7 to 1.25 x U_s (U_s = rated control supply voltage). This wide operating range has been used as a basis for ensuring that the supply voltage of the electronic controls stays within the required voltage tolerances. The supply voltage of electronic controllers with 24 V DC can encompass the range from 20.4 V to 28.8 V. If you take an additional voltage drop of up to 3 V within the output stages into account, the contactor operating mechanism must function without errors at voltages of between 17.4 V and 28.8 V. The 3RT20 and 3RH21 coupling relays for electronic controls work reliably from 17 V to 30 V, which corresponds to a voltage range of 0.7 x U_s to 1.25 x U_s. Compared to the operating range of 0.85 to 1.1 x U_s for contactors and contactor relays according to IEC 60947-4-1, this is a significantly expanded operating range.

The illustration below shows the voltage ranges for electronic controls and mechanisms of contactors and contactor relays with a rated control supply voltage U_s = 24 V DC:

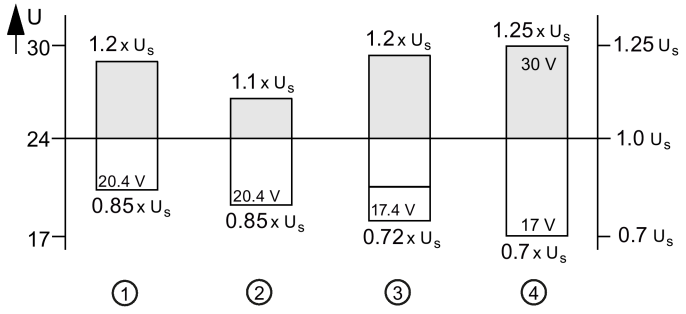

1 Supply voltage range of electronic controllers

2 Standard operating range for contactors according to IEC 60947-4-1

3 Voltage range for electronic outputs at ≤ 3 V internal voltage drop

4 Operating range of the coupling relays

Figure 5-1 Comparison of the voltage ranges of coupling relays

5.11 Operation of a motor in two directions of rotation (reversing contactor assembly)

Applications

A reversing contactor assembly is used to operate a motor in two directions of rotation. The starting characteristics correspond to those of a direct-on-line starter. When used in conjunction with the relevant protective devices, they facilitate the space-saving and compact assembly of fused and fuseless feeders.
On contactor assemblies with AC operation, 50/60 Hz, a changeover delay of 50 ms must be provided at voltages ≥ 500 V. At voltages ≥ 400 V, a changeover delay of 30 ms is recommended. These idle times do not apply to combinations with DC operation.

Variants and rated powers

The reversing contactor assemblies are available with a uniform power range of 3 kW to 250 kW (utilization category AC-3).

The reversing contactor assemblies of sizes S00 to S3 are available in two versions:

- Fully wired and tested with electrical and mechanical interlock
- Kit for self-assembly

Reversing contactor assemblies of sizes S6 to S12:

- Wiring kit for self-assembly

Reversing contactor assemblies of sizes S00 to S3:

For simplified connection to the controller, the SIRIUS modular system offers 3RA27 function modules with versions for connection via AS-Interface or IO-Link. In this case, the first contactor must be fitted with voltage tapping (special contactor version).

The diagram below shows the fully mounted 3RA23 reversing contactor assembly size S0 with a screw-type connection system.

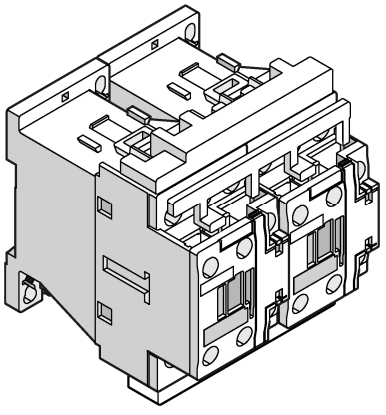

Figure 5-2 Reversing contactor assembly with screw-type connection system (size S0)

Contactor selection for creating a reversing contactor assembly

Table 5- 3 Screw connection

Rated data AC-2 and AC-3 at 50 Hz 400 V AC		Size	Article number			
Power	Operational current I_e		Contactor	Mechanical interlock [1]	Assembly kit [2]	Fully-wired and tested contactor assemblies
[kW]	[A]					
3	7	S00	3RT2015-1...2	--	3RA2913-2AA1	3RA2315-8XB30-1...
4	9		3RT2016-1...2			3RA2316-8XB30-1...
5.5	12		3RT2017-1...2			3RA2317-8XB30-1...
7.5	16		3RT2018-1...2			3RA2318-8XB30-1...
5.5	12	S0	3RT2024-1...0	--	3RA2923-2AA1	3RA2324-8XB30-1...
7.5	16		3RT2025-1...0			3RA2325-8XB30-1...
11	25		3RT2026-1...0			3RA2326-8XB30-1...
15	32		3RT2027-1...0			3RA2327-8XB30-1...
18.5	38		3RT2028-1...0			3RA2328-8XB30-1...
18.5	40	S2	3RT2035-1...0	3RA2934-2B	3RA2933-2AA1	3RA2335-8XB30-1...
22	55		3RT2036-1...0			3RA2336-8XB30-1...
30	65		3RT2037-1...0			3RA2337-8XB30-1...
37	80		3RT2038-1...0			3RA2338-8XB30-1...
37	80	S3	3RT2045-1...0	3RA2934-2B	3RA2943-2AA1	3RA2345-8XB30-1...
45	95		3RT2046-1...0			3RA2346-8XB30-1...
55	110		3RT2047-1...0			3RA2347-8XB30-1...

[1] The mechanical interlocking for sizes S00 / S0 cannot be ordered as an individual unit.

[2] The assembly kit contains: Connecting clips for 2 contactors, wiring modules at top and bottom (main circuits, control circuits, as well as the mechanical interlock for the sizes S00 / S0)

Table 5- 4 Spring-loaded connection

Rated data AC-2 and AC-3 at 50 Hz 400 V AC		Size	Article number			
Power	Operational current I_e		Contactor	Mechanical interlock [1]	Assembly kit [2]	Fully-wired and tested contactor assemblies
[kW]	[A]					
3	7	S00	3RT2015-2...2	--	3RA2913-2AA2 [2]	3RA2315-8XB30-2...
4	9		3RT2016-2...2			3RA2316-8XB30-2...
5.5	12		3RT2017-2...2			3RA2317-8XB30-2...
7.5	16		3RT2018-2...2			3RA2318-8XB30-2...
5.5	12	S0	3RT2024-2...0	--	3RA2923-2AA2 [3]	3RA2324-8XB30-2...
7.5	16		3RT2025-2...0			3RA2325-8XB30-2...
11	25		3RT2026-2...0			3RA2326-8XB30-2...
15	32		3RT2027-2...0			3RA2327-8XB30-2...
18.5	38		3RT2028-2...0			3RA2328-8XB30-2...
18.5	40	S2	3RT2035-3...0	3RA2934-2B	3RA2933-2AA2	--
22	55		3RT2036-3...0			
30	65		3RT2037-3...0			
37	80		3RT2038-3...0			
37	80	S3	3RT2045-3...0	3RA2934-2B	3RA2943-2AA2	--
45	95		3RT2046-3...0			
55	110		3RT2047-3...0			

[1] The interlock can only be ordered with the kit.

[2] The assembly kit contains: Mechanical interlock, connecting clips for 2 contactors, wiring modules on the top and bottom (main circuits, control circuits and auxiliary circuits).

[3] The assembly kit contains: Mechanical interlock, connecting clips for 2 contactors, wiring modules on the top and bottom (main circuits).

Auxiliary switch blocks

The 3RA23 reversing contactor assembly can be fitted with various auxiliary switches (on the front or laterally). A maximum of 8 auxiliary contacts are permitted per reversing contactor assembly:

Table 5- 5 Auxiliary switch combination options for the 3RA23 reversing contactor assembly

3RA23 reversing contactor assembly				
Size	Possible versions	Front		Lateral
		1-pole	4-pole	2-pole
			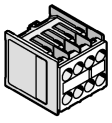	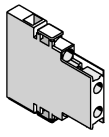
S00 / S0 / S2 / S3	1	0	2	0
	2	2	0	2

Kit for reversing contactor assemblies of sizes S6 to S12

The following accessories for the basic units can also be used for the reversing contactor assemblies:

- Auxiliary switch blocks (on the front, on the side)
- Surge suppressors

The following accessories are provided especially for the reversing contactor assemblies:

- Mechanical interlocks
- Mechanical connectors
- Wiring modules, top and bottom
- Base plates

Typical main circuit

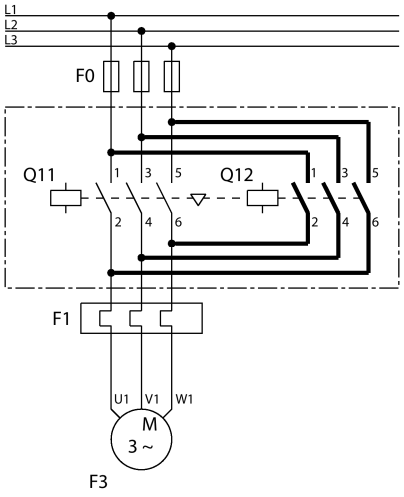

Figure 5-3 Main circuit of the reversing contactor assembly

Typical control circuit

Table 5- 6 Typical control circuit of the reversing contactor assembly

Pushbutton switch control	Maintained-contact operation
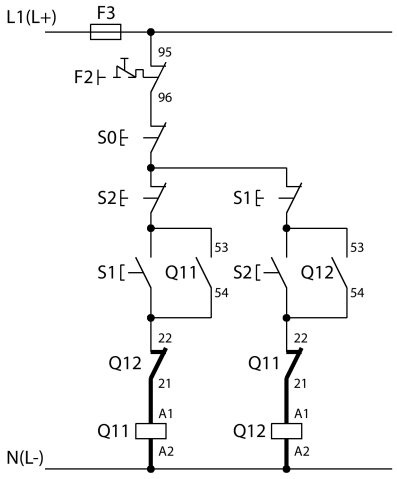	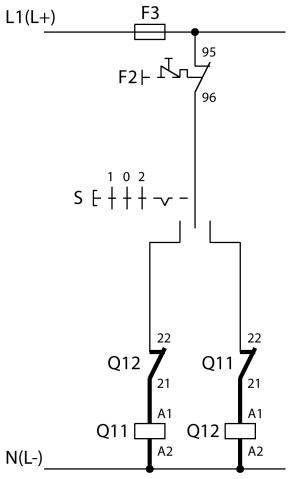

Table 5- 7 Legend - Typical control circuit of the reversing contactor assembly

Abbreviation	Explanation
S0	"OFF" button
S1	"ON - Clockwise rotation" button
S2	"ON - Counterclockwise rotation" button
S	"Clockwise - Off - Counterclockwise" selector switch
Q11	Clockwise rotation contactor
Q12	Counterclockwise rotation contactor
F1	Fuses for main circuit
F2	Overload relay
F3	Fuses for control circuit

5.11.1 Reference

Reference

More information ...	Can be found in the chapter titled ...
About the components for self-assembly of the reversing contactor assemblies	Assembly kit for reversing contactor assembly (sizes S00 to S3) (Page 333) and wiring kit for reversing contactor assemblies (sizes S6 to S12) (Page 351).
About the function modules that can be attached to a reversing contactor assembly with communication interface	3RA27 function modules for connection to the controller (AS-Interface or IO-Link). (Page 330)

5.12 Starting three-phase motors with reduced starting current peaks (contactor assembly for star-delta (wye-delta) start)

Applications

A contactor assembly for star-delta (wye-delta) start is used for starting three-phase motors requiring a reduction in system load and prevention of false tripping of protection equipment as a result of excessively high current peaks. With this circuit type, the motor's starting current is reduced by 1/3 (proportional load torque) compared with direct startup.

Note

Increased current peaks

When switching over from star operation to delta operation, the motor may be subjected to compensation processes (fueled by an unfavorable line frequency/rotor field constellation), which would result in higher current peaks than would be the case if the stationary motor were connected directly in the delta circuit. This must be taken into account when configuring a contactor assembly for star-delta (wye-delta) start.

For detailed information, please refer to section "Technical background information (Page 125)"

Note

The preferred wiring for the 3RA24 contactor assembly minimizes this effect.

The 3RA24 contactor assemblies for star-delta (wye-delta) start described below have been dimensioned for standard applications.

Note

Contactor assemblies for star-delta (wye-delta) start for special applications, such as very heavy starting or star-delta (wye-delta) startup of special motors, must be customized. When dimensioning contactor assemblies for special applications such as these you can obtain support from Technical Assistance (http://www.siemens.com/sirius/technical-assistance).

Variants and rated powers

The contactor assemblies for star-delta (wye-delta) start are available with a uniform power range of 5.5 kW to 55 kW (utilization category AC-3).

The 3RA24 contactor assembly for star-delta (wye-delta) start of sizes S00 to S3 is available in two versions:

- Fully wired and tested with electrical and mechanical interlock
- Kit for self-assembly

Contactor assemblies for star-delta (wye-delta) start of sizes S6 to S12:

- Wiring kit for self-assembly

The SIRIUS modular system offers 3RA27 function modules for connection to the automation level; they are fitted with terminals for connection to AS-Interface or IO-Link.

Note

We recommend installing contactor assemblies on a mounting plate. The mounting plate can be ordered as an individual unit. (Extension can be used for 3RP25 / 3RP15).

Note

If the contactor assembly for star-delta (wye-delta) start is to be connected to a control for communication capability, a contactor must be selected (3RT2...-.....-0CC0).

Note

With the 3RA24 contactor assembly for star-delta (wye-delta) start, the auxiliary switches integrated in the contactor can still be used. Additional auxiliary switch blocks cannot be fitted with the function modules attached.

The function module replaces all the wiring in the control circuit and can be used in the voltage range from 24 to 240 V AC/DC. The changeover delay of 50 ms (timing relay functionality) is already integrated in the star-delta (wye-delta) function module.

The illustration below shows the 3RA24 contactor assemblies for star-delta (wye-delta) start without a communication connection in size S0 with a screw-type connection system:

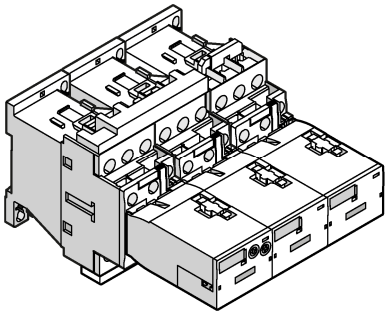

Figure 5-4 Contactor assembly for star-delta (wye-delta) start with screw-type connection system without a communication connection (size S0)

Contactor selection for configuring a contactor assembly for star-delta (wye-delta) start

The 3RA24 contactor assemblies have screw or spring-loaded connections and are suitable for screw and or snap-on mounting on a TH 35 mounting rail. With the fully-wired and tested 3RA24 contactor assemblies, the auxiliary contacts included in the basic devices are freely available.

The contactor assemblies in sizes S2 to S3 are always supplied with a mounting plate.

Table 5- 8 Screw connection

Rated data for 50 Hz 400 V AC			**Size**	**Article number**		
Power [kW]	**Operational current I_e [A]**	**Motor current [A]**		**Line / delta contactor**	**Star contactor**	**Complete assembly**
5.5	12	9.5 … 13.8	S00-S00-S00	3RT2015-1....	3RT2015-1....	3RA2415-8XF31-1...
7.5	16	12.1 … 17		3RT2017-1....	3RT2015-1....	3RA2416-8XF31-1...
11	25	19 … 25		3RT2018-1....	3RT2016-1....	3RA2417-8XF31-1...
11	25	19 … 25	S0-S0-S0	3RT2024-1...0	3RT2024-1...0	3RA2423-8XF32-1...
15	32	24.1 … 34		3RT2026-1...0	3RT2024-1...0	3RA2425-8XF32-1...
18.5	40	34.5 … 40		3RT2026-1...0	3RT2024-1...0	3RA2425-8XF32-1...
22	50	31 … 43		3RT2027-1...0	3RT2026-1...0	3RA2426-8XF32-1...
22 / 30	45 / 60	31 … 43	S2-S2-S0	3RT2035-1...0	3RT2026-1...0	3RA2434-8XF32-1...
37	80	62.1 ... 77.8		3RT2035-1...0	3RT2027-1...0	3RA2435-8XF32-1...
45	86	69 ... 86		3RT2036-1...0	3RT2028-1...0	3RA2436-8XF32-1...
55	115	77.6 ... 108.6	S2-S2-S2	3RT2037-1...0	3RT2035-1...0	3RA2437-8XF32-1...
55	115	77.6 ... 108.6	S3-S3-S2	3RT2045-1...0	3RT2035-1...0	3RA2444-8XF32-1...
75	150	120.7 ... 150		3RT2045-1...0	3RT2036-1...0	3RA2445-8XF32-1...
90	160	86 ... 160		3RT2046-1...0	3RT2037-1...0	3RA2446-8XF32-1...

Table 5- 9 Spring-loaded connection

Rated data for 50 Hz 400 V AC			Size	Article number		
Power [kW]	Operational current I_e [A]	Motor current [A]		Line / delta contactor	Star contactor	Complete assembly
5.5	12	9.5 … 13.8	S00-S00-S00	3RT2015-2....	3RT2015-2....	3RA2415-8XF31-2...
7.5	16	12.1 … 17		3RT2017-2....	3RT2015-2....	3RA2416-8XF31-2...
11	25	19 … 25		3RT2018-2....	3RT2016-2....	3RA2417-8XF31-2...
11	25	19 … 25	S0-S0-S0	3RT2024-2...0	3RT2024-2...0	3RA2423-8XF32-2...
15	32	24.1 … 34		3RT2026-2...0	3RT2024-2...0	3RA2425-8XF32-2...
18.5	40	34.5 … 40		3RT2026-2...0	3RT2024-2...0	3RA2425-8XF32-2...
22	50	31 … 43		3RT2027-2...0	3RT2026-2...0	3RA2426-8XF32-2...
22 / 30	45 / 60	31 … 43	S2-S2-S0	3RT2035-3...0	3RT2026-2...0	--
37	80	62.1 ... 77.8		3RT2035-3...0	3RT2027-2...0	--
45	86	69 ... 86		3RT2036-3...0	3RT2028-2...0	--
55	115	77.6 ... 108.6	S2-S2-S2	3RT2037-3...0	3RT2035-3...0	--
55	115	77.6 ... 108.6	S3-S3-S2	3RT2045-3...0	3RT2035-3...0	--
75	150	120.7 ... 150		3RT2045-3...0	3RT2036-3...0	--
90	160	86 ... 160		3RT2046-3...0	3RT2037-3...0	--

Note

The selection of contactor types refers to a fused design.

Connection example with spring-loaded connection and large conductors, e.g. with 6 mm² connection cross-section

For a contactor assembly for star-delta (wye-delta) start, e.g. 3RA2426-8XH32-2BB4 (22 kW, 50 A), it is possible to select the following connection type with a 6 mm² conductor cross-section:

- Remove the upper wiring modules to connect the main current paths between line contactor (Q 11) and delta contactor (Q 13).
- Separate infeed of line contactor (Q 11) and delta contactor (Q 13) with 6 mm² (permitted in a three-way network).
  Two conductors per phase with 6 mm² conductor cross-section are connected to the central infeed short-circuit protection device and only one conductor per phase to the contactors.

Kit for contactor assemblies for star-delta (wye-delta) start, sizes S6 to S12

The contactor assemblies for star-delta (wye-delta) start are available as kits for self-assembly.

The same accessories as for the basic units of the corresponding size can be used.

The kit for contactor assemblies for star-delta (wye-delta) start contains the following:

- Neutral bridges
- Wiring module on the bottom (wiring module on the top is not included in the scope of supply. (A double infeed between the line contactor and the delta contactor is recommended.)

The following accessories for the basic units can also be used for the contactor assemblies for star-delta (wye-delta) starting:

- Auxiliary switch blocks (on the front, on the side)
- Surge suppressors
- Solid-state time-delay auxiliary switch blocks with star-delta (wye-delta) function (timing relay)

In addition, special accessories are available for the contactor assemblies for star-delta (wye-delta) start:

- Neutral bridges (parallel connectors)
- Mechanical connectors
- Wiring modules
- Base plates for contactor assemblies for star-delta (wye-delta) start

5.12.1 Reference

Reference

More information ...	Can be found in the chapter titled ...
About the components for customers to assemble their own contactor assemblies for star-delta (wye-delta) start	Assembly kit for contactor assemblies for star-delta (wye-delta) start (sizes S00 to S3) (Page 357) and Wiring kit for contactor assemblies for star-delta (wye-delta) start (sizes S6 to S12). (Page 393).

5.12.2 Technical background information

Starting current ratio

Star-delta (wye-delta) startup can only be used if the motor normally operates in a delta connection or starts softly, or if the load torque is low and does not rise sharply during star startup. In the star (wye) stage motors can be subjected to around 50% (class CL16) or 30% (CL10) of their rated torque. The starting torque falls to about 1/3 of the relevant value during direct switch-on.
The starting current is approximately 2 to 2.7 times the rated motor current.

Switching over

The switchover from star (wye) to delta cannot be carried out until the motor has been fully accelerated to the rated speed. The necessary changeover delay and interlock are integrated in the contactor assembly; drives which require this switchover to be performed earlier are not suitable for star-delta (wye-delta) start.

Reducing the switchover current peak by means of preferred wiring

During star-delta (wye-delta) switching of three-phase motors, the motor may be subjected to compensation processes, which would result in higher current peaks than would be the case if the stationary motor were connected directly in the delta circuit.

The worst-case scenario would lead to the following problems, which can be minimized by using preferred wiring:

- Tripping of short-circuit protection devices
- Welding or substantial contact erosion of the delta contactor
- High dynamic load on the motor

Using a favorable method of connection for the main circuit will reduce the equalizing currents and current peaks which occur when switching over from a star to a delta circuit.

Preferred wiring used

The phasor diagram below shows the voltages which occur in a motor running in the clockwise direction when switching over from star (wye) to delta. According to the preferred wiring, the motor terminals are connected correctly, i.e. phase L1 is connected to motor terminals U1 and V2, L2 to V1 and W2, and L3 to W1 and U2.

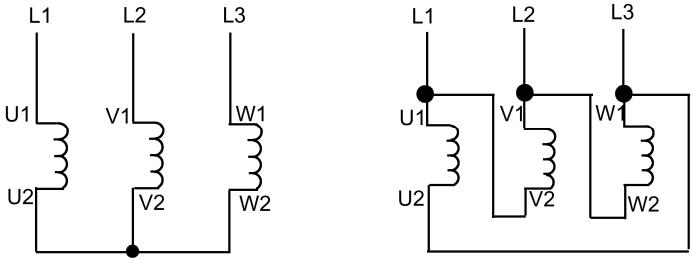

Figure 5-5 Correct connection of motor phases for clockwise rotation

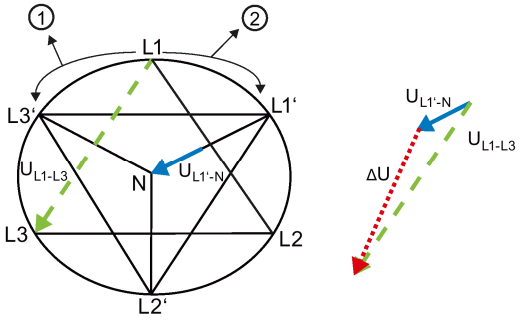

1 Rotating field

2 Rotor's overtravel during the current-free phase

Figure 5-6 Phasor diagram for star-delta switchover during clockwise rotation with motor phases connected correctly

During the current-free changeover delay, the rotor overtravels the rotating field. Its magnetic field induces a decaying residual voltage, entered here in the voltage phasor diagram for phase L1: $U_{L1'-N}$.

On switching to delta (see diagrams above), the stator winding which is conducting this residual voltage is connected to the line voltage U_{L1-L3}. Thanks to the favorable vector position of the residual voltage $U_{L1'-N}$ and the line voltage U_{L1-L3}, which are roughly rectified, the differential voltage ΔU is relatively low. As a result, the current peak generated by this voltage will also remain low.

Preferred wiring not used

The motor also rotates clockwise if the motor terminals are connected as follows: phase L1 to motor terminals U1 and W2, L2 to V1 and U2, and L3 to W1 and V2.

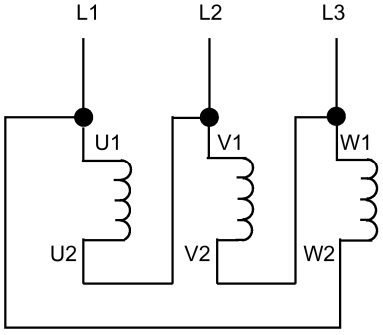

Figure 5-7 Motor phases connected incorrectly results in clockwise rotation

The remanent and decaying residual voltage becomes effective in the stator once more. The phase winding with phasor $U_{L1'-N}$ is now connected to the line phase U_{L1-L2} on switching to delta. However, these two voltages have totally different vectorial directions; differential voltage ΔU is high and produces a correspondingly high switchover current peak.

A switchover from star to delta results in the phasor diagram below.

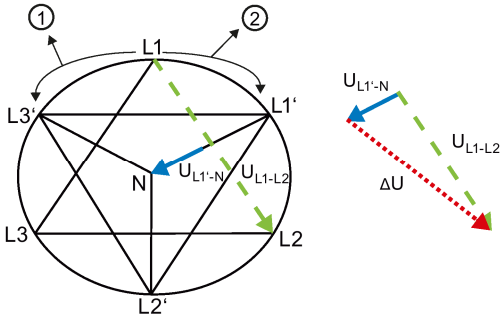

1 Rotating field

2 Rotor's overtravel during the current-free phase

Figure 5-8 Phasor diagram for motor phase connections made according to the previous diagram results in a high switchover current peak

Changing the direction of rotation from clockwise to counterclockwise

Note

In order to set the motor to counterclockwise rotation, it is not simply a case of swapping over two phases at any location. This would result in the same conditions as those described for clockwise rotation.

The wiring must be performed as follows in order to keep the switchover current peak which occurs on switching from star (wye) to delta as low as possible here too:

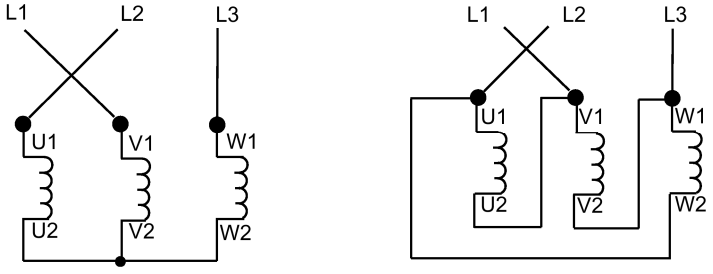

Figure 5-9 Correct connection of motor phases for counterclockwise motor rotation

Table 5- 10 Device sizing during normal starting

Star contactor	Line and delta contactor	Overload relay
I_{motor} x 0.33	I_{motor} x 0.58	I_{motor} x 0.58

Note

If two phases are swapped over in the network in order to change the direction of rotation, the circuit is automatically changed/reversed from the most favorable to the least favorable.

φ = switchover current factor = switchover current peak / starting current peak
The switchover current factor has a theoretical maximum value of 2
e. g. measured:
Favorable circuit: φ = 0.8
Unfavorable circuit: φ = 1.37

Note

See the main and control circuit wiring designs below; these depict the circuit diagrams for contactor assemblies for star-delta (wye-delta) start with clockwise and counterclockwise rotation according to the preferred wiring.

Main circuit

The diagram below shows the preferred main circuit wiring for a star-delta circuit, clockwise and counterclockwise rotation.

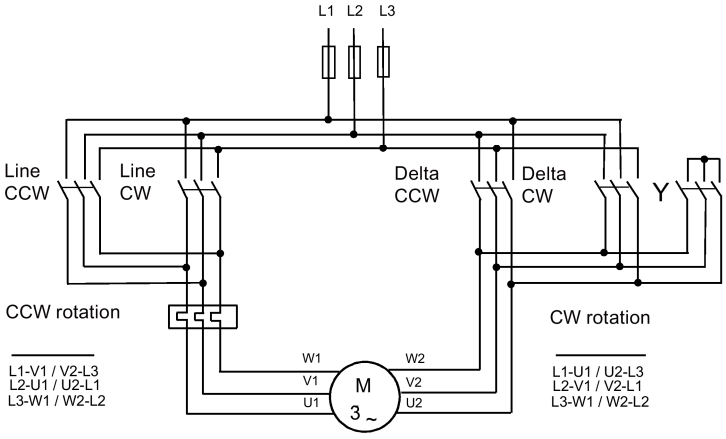

Figure 5-10 Main circuit of the contactor assembly for star-delta (wye-delta) start

Control circuit

The diagram below shows the control circuit for the main circuit depicted above.

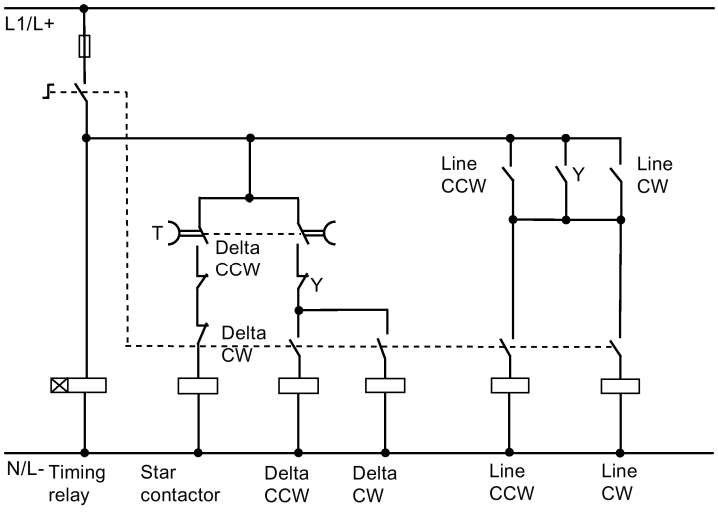

Figure 5-11 Control circuit of the contactor assembly for star-delta (wye-delta) start

5.13 Using long control cables

Malfunctions caused by long control cables

If long control cables are required for the control circuits of contactors or relays, malfunctions may occur during switching under certain conditions. As a result of these malfunctions, the contactors may no longer be able to switch on or off.

Switching on

Due to the voltage drop in long control cables, the control voltage applied to the contactor may fall below the threshold value at which the contactor switches on. This affects both DC- and AC-operated contactors.

The following counter-measures can be taken here:

- Changed circuit topology to allow the use of shorter control cables
- Increased conductor cross-section.
- Increased control voltage.
- Use of a contactor whose solenoid coil has a lower closing power.

Calculation of the maximum cable length:

The maximum permissible simple cable length I_{zul} can be roughly calculated using the equations given below.

Table 5- 11 Calculating the cable length

	For AC voltage	For DC voltage
	$I_{zul} = \frac{5 \cdot U_S^2 \cdot u_{SL}}{R_{SL} \cdot P_{ein}}$ (in m)	$I_{zul} = \frac{5 \cdot U_S^2 \cdot u_{SL}}{R_{SL} \cdot P_{ein}}$ (in m)
U_S	Rated control voltage in V	
R_{SL}	Ohmic resistance per conductor and km of the control cable in Ω/km	
U_{SL}	Voltage drop on the control cable in %	
S_{ein}, P_{ein}	Closing power of the contactor in VA/W	
cos ϕ_{ein}	Power factor of the contactor coil on switch-on	

Note

A maximum cable voltage drop of u_{SL} = 5 % is permitted for SIRIUS contactors.

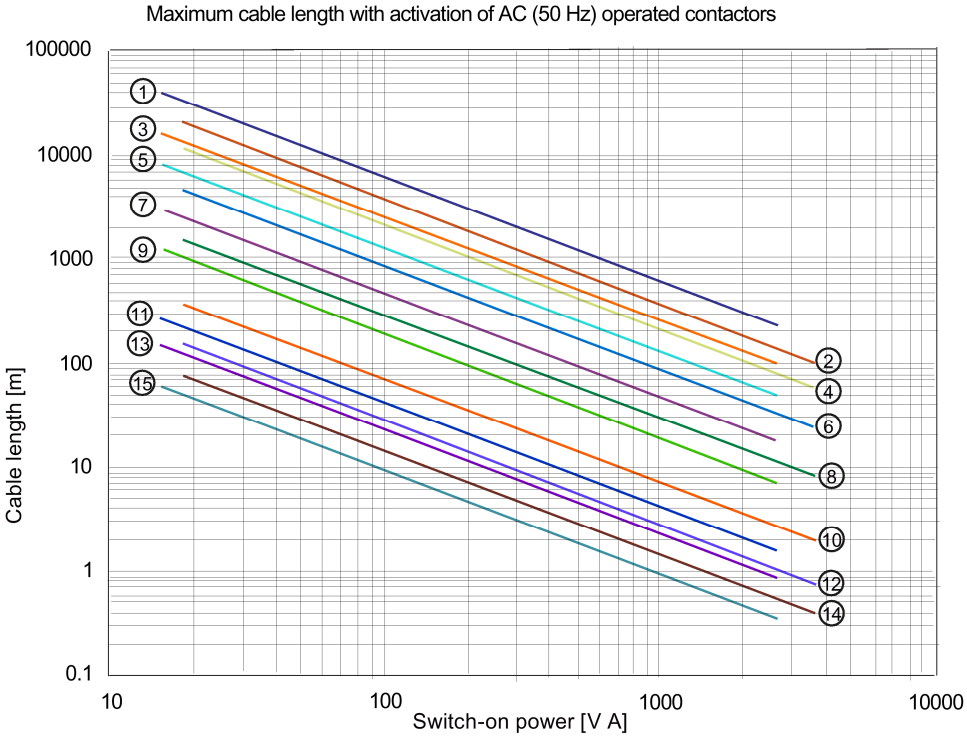

1	400 V / 2.5 mm²	9	110 V / 1 mm²
2	400 V / 1.5 mm²	10	42 V / 2.5 mm²
3	400 V / 1 mm²	11	42 V / 1.5 mm²
4	230 V / 2.5 mm²	12	42 V / 1 mm²
5	230 V / 1.5 mm²	13	24 V / 2.5 mm²
6	230 V / 1 mm²	14	24 V / 1.5 mm²
7	110 V / 2.5 mm²	15	24 V / 1 mm²
8	110 V / 1.5 mm²		

Figure 5-12 Graphical representation, switch-on

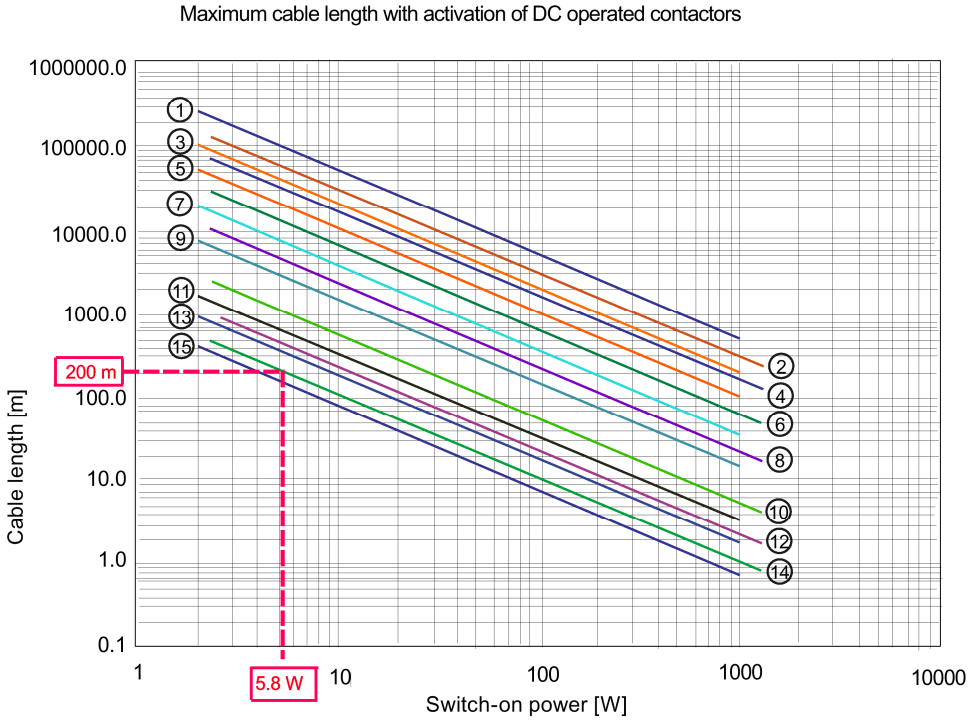

1	400 V / 2.5 mm²	9	110 V / 1 mm²
2	400 V / 1.5 mm²	10	42 V / 2.5 mm²
3	400 V / 1 mm²	11	42 V / 1.5 mm²
4	230 V / 2.5 mm²	12	42 V / 1 mm²
5	230 V / 1.5 mm²	13	24 V / 2.5 mm²
6	230 V / 1 mm²	14	24 V / 1.5 mm²
7	110 V / 2.5 mm²	15	24 V / 1 mm²
8	110 V / 1.5 mm²		

Figure 5-13 Graphical representation, switch-on - Example

Example for 3RT202. contactor:

- DC-operated
- 5.8 W switch-on power
- Cross-section of the control cable 1.5 mm²
- Maximum permissible control cable length: 200 m at 24 V

Switching off

During the switch-off of AC-operated contactors, the contactor may no longer switch off in case of control circuit interruption due to an excessive line capacity of the control cable.

The following counter-measures can be taken here:

- Changed circuit topology to allow the use of shorter control cables
- Application of DC-operated contactors.
- Reduced control voltage.
- Use of a contactor whose solenoid coil has a higher holding power.
- Parallel connection of an ohmic resistance for increased holding power.

Sizing of the parallel resistance	Power of the additional resistance
$R_p = \frac{1000}{C_L}$ (in Ω)	$P_p = \frac{U_S^2}{R_p}$ (in W)

For reasons of cost effectiveness, P_P should be lower than 10 W.

Table 5- 12 Calculation of the maximum cable length

For pushbutton switch control	For maintained-contact operation
For pushbutton switch control with a three-core cable, a line capacity of 0.6 µF/km (2 x 0.3 µF/km) should be expected.	For maintained-contact operation with a two-core cable, a line capacity of 0.3 µF/km should be expected.
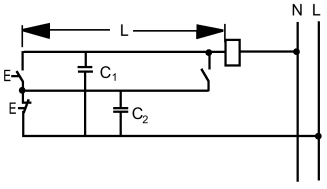	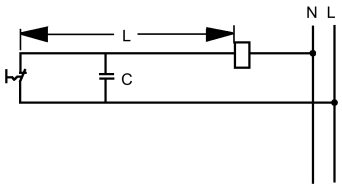
$I_{perm} = \frac{500 \cdot S_H}{2 \cdot 0.3 \cdot U_S^2} 10^3$ (in m)	$I_{perm} = \frac{500 \cdot S_H}{0.3 \cdot U_S^2} 10^3$ (in m)
U_S Rated control supply voltage in V S_H Holding power of the contactor in VA	U_S Rated control supply voltage in V S_H Holding power of the contactor in VA

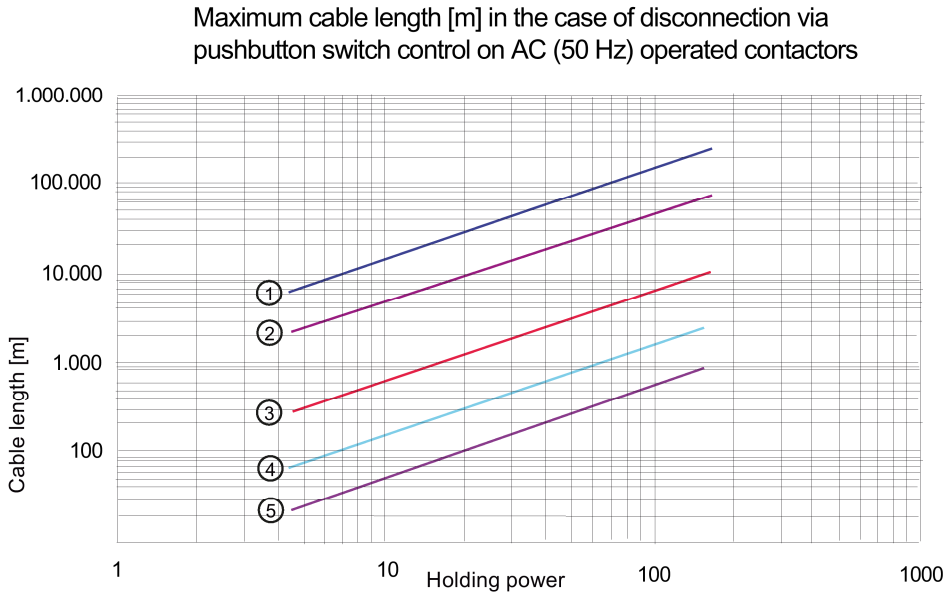

1 24 V
2 42 V
3 110 V
4 230 V
5 400 V

Figure 5-14 Graphical representation, switch-off

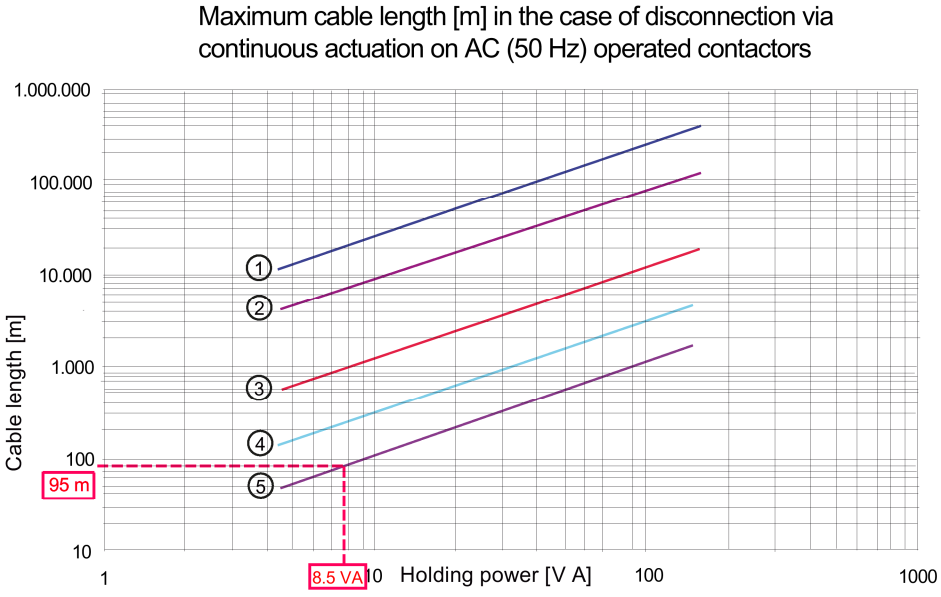

1 24 V
2 42 V
3 110 V
4 230 V
5 400 V

Figure 5-15 Graphical representation, switch-off - Example

Example for 3RT202. contactor:

- AC-operated
- 8.5 VA holding power
- Control voltage 400 V AC
- Maximum permissible control cable length: 95 m

5.14 Configuration information for use downstream of frequency converters

There are important criteria for the selection of switching devices when operating with converters.

The following general rule applies: Frequency converters comprise DC link capacitors that cause high inrush current peaks if no attenuation measures have been taken inside the converter using reactors or precharging resistors. The non-attenuated charging current is almost the equivalent of a short-circuit and thus a heavy load on the contacts.

Use of 3RT2 contactors on the primary side of a frequency converter

If these current peaks are higher than the making capacity of the contactors, the contactor contacts can bounce. The arcs created in this way liquefy the contact material with subsequent contact sticking and welding. Since the level of the actual current peaks at the installation location of the frequency converter depends essentially on the series impedance of the power system and on the instant of closing, the following must be noted when selecting a suitable contactor.

Converter without precharging resistors

If the current peak value is known:
on converters without precharging resistors and where the current peak value is known, the 3RT20 contactor can be used in accordance with its making capacity (10 x I_e AC-3). This making capacity must not be lower than the current peaks.

If the current peak value is not known:
on converters without precharging resistors and where the current peak value is unknown, capacitor contactors are recommended on the primary side.
The use of capacitor contactors attenuates inrush currents to non-critical levels. In addition, losses must be minimized, particularly in standby periods, but also during operation. In the case of frequency converters, losses occur up to the DC link due to input circuits with filters or reactors. These frequency converter standby losses can be reduced to almost zero by disconnection with a contactor on the main current supply side.

The following 3RT26 capacitor contactors are suitable for use on the primary side of frequency converters:

- 3RT2617: Suitable for the performance range to 5.5 kW/400 V
- 3RT2627: Suitable for the performance range of 7.5 kW to 15 kW/400 V
- 3RT2637: Suitable for the performance range of 22 kW to 37 kW/400 V

This depends on the information provided by the frequency converter manufacturer.

Converters with precharging resistors

Siemens converters (SINAMICS / Masterdrives) have precharging resistors. This is why the charging current is restricted to the rated current of the converter. For this reason, the contactor itself can be dimensioned in accordance with utilization category AC-1 (resistive load).

Ultimately, the manufacturer of the frequency converter is responsible for naming the criteria for contactor selection, because only the manufacturer knows the operating characteristics of the product precisely enough to be able to make responsible product recommendations or define product requirements for the contactors.

Use of 3RT2 contactors on the secondary side of a frequency converter

An output contactor is usually not required. Only if specifically requested by the customer, is an output contactor supplied. An output contactor is required in the following cases:

- Operation of the frequency converter in bypass mode
- Disconnection of the motor in the case of EMERGENCY-STOP
- Use of the frequency converter for several motors that are to be connected optionally

On the output side of frequency converters, contactors are usually dimensioned in accordance with utilization category AC-3 corresponding to the motor rated current and the associated voltage (as with direct-on-line starting). Since voltage and frequency are almost always proportional in frequency converters, shutdown of the load at low frequencies is not critical for the contactor.

Example

A voltage of only 40 V would apply at 5 Hz with respect to a 400 V / 50 Hz power supply system. This can be handled by an AC-3-rated contactor without any problem during the breaking operation.

NOTICE
These statements do not apply to vacuum contactors that are not suitable for low frequencies.

Procedure when shutting down Siemens converters

1. EMERGENCY-OFF (disconnect drive from power as quickly as possible)
   Before the contactor is opened, the converter must shut down via inverter enable / pulse disable (command OFF 2).
2. EMERGENCY-OFF (controlled ramp-down of the drive)
   If a quick stop is to take place, the drive is ramped down (command OFF 3).
   The pulse disable must take place before the contactor is opened (command OFF 2).

5.15 Contact service life of auxiliary and main contacts

5.15.1 3RT2 power contactors (sizes S00 to S3)

5.15.1.1 Contact service life of auxiliary and main contacts (sizes S00 and S0)

Contact service life of auxiliary contacts

This requires operating mechanisms that switch at random, i.e. not synchronized with the phase angle of the supply system.
The contact service life is essentially dependent on the breaking current.
The characteristic curves apply to:

- Integrated auxiliary contacts on 3RT20
- Auxiliary switch blocks 3RH2911-., 3RH2921-. for contactors size S00 and S0

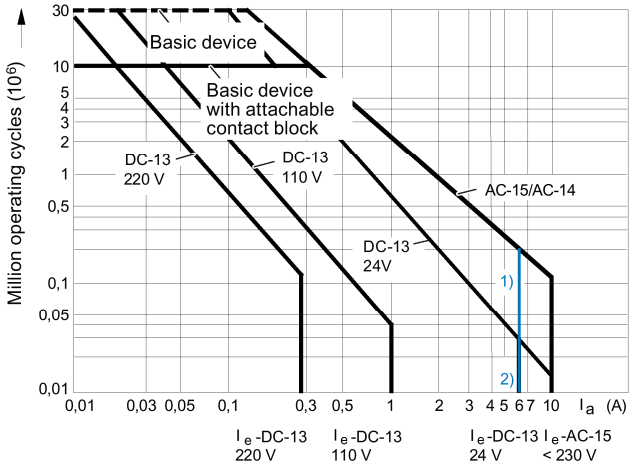

Legend for diagram:
I_a = Breaking current
I_e = Rated operational current

1) Integrated auxiliary contacts (size S0) and contacts in the auxiliary switch blocks for contactors (size S00 and S0): 6 A

2) Contacts in auxiliary switch blocks for contactors size S00 and S0: 6 A

Contact service life of main contacts

The characteristic curves show the contact service life of contactors when switching resistive and inductive three-phase loads (AC-1/AC-3) as a function of breaking current and rated operational voltage. This requires operating mechanisms that switch at random, i.e. not synchronized with the phase angle of the supply system.

The rated operational current I_e in accordance with utilization category AC-4 (breaking of 6 times the rated operational current) is specified for a contact service life of at least 200,000 operating cycles.

If a shorter contact service life is sufficient, the rated operational current I_e/AC-4 can be increased.

In the case of mixed operation, i.e. if normal switching operation (breaking of rated operational current in accordance with utilization category AC-3) is mixed with occasional inching (breaking of the multiple rated operational current in accordance with utilization category AC-4), the service life of the contacts can be calculated approximately using the following formula:

$$X = \frac{A}{1 + \frac{C}{100} \cdot \left(\frac{A}{B} - 1\right)}$$

Legend for formula:

- X: Contact service life for mixed operation in operating cycles
- A: Contact service life for normal operation ($I_a = I_e$) in operating cycles
- B: Contact service life for inching (I_a = multiple of I_e) in operating cycles
- C: Proportion of inching operations as a percentage of all operations

Size S00

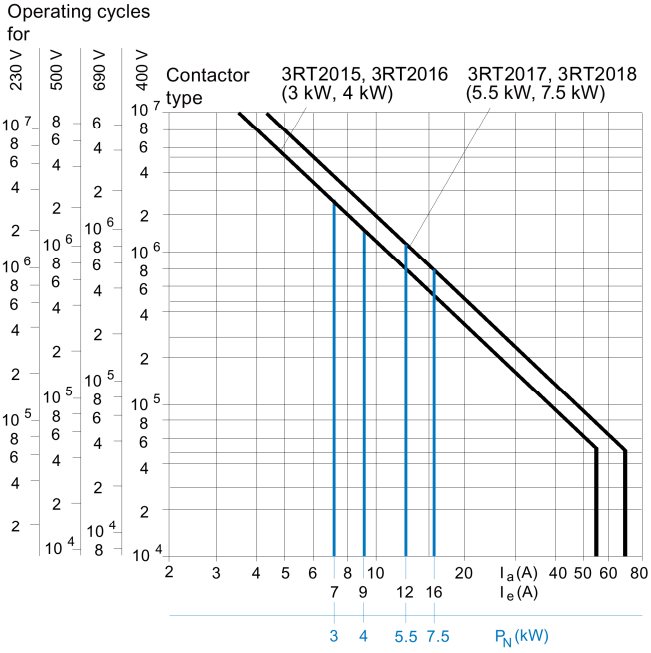

Contact service life of main contacts

Size S0

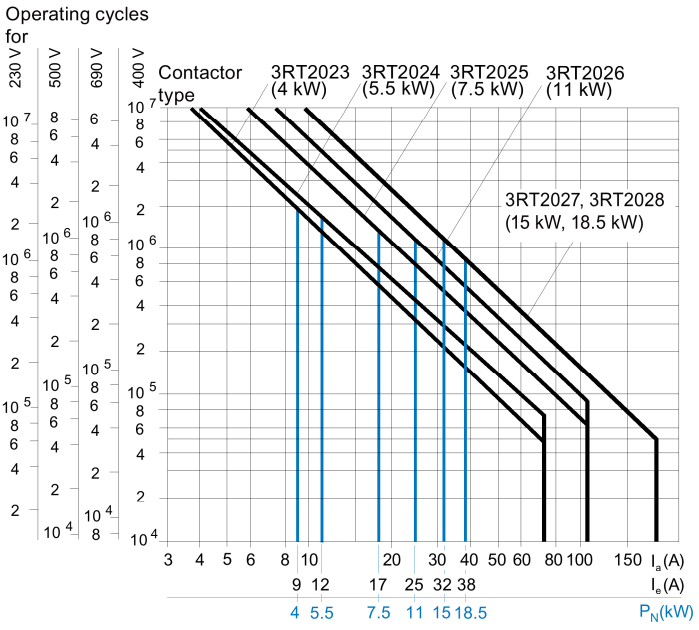

Legend for diagram:

P_N= Rated power of squirrel-cage motors at 400 V

I_a= Breaking current

I_e= Rated operational current

5.15.1.2 Contact service life of auxiliary and main contacts (size S2)

Contact service life of auxiliary contacts

This requires operating mechanisms that switch at random, i.e. not synchronized with the phase angle of the supply system.
The contact service life is essentially dependent on the breaking current.
The characteristic curves apply to:

- Integrated auxiliary contacts on 3RT20
- Auxiliary switch blocks 3RH2911-., 3RH2921-. for contactors size S2.

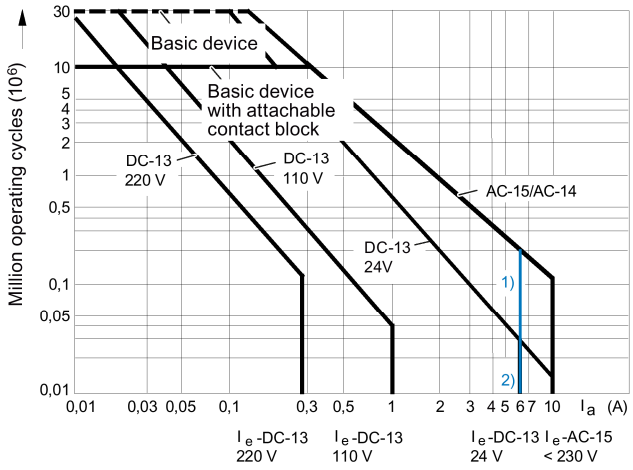

Legend for diagram:
I_a = Breaking current
I_e = Rated operational current

1) Integrated auxiliary contacts and contacts in the auxiliary switch blocks for contactors (size S2): 6 A

2) Contacts in auxiliary switch blocks for contactors size S2: 6 A

Contact service life of the main contacts

The characteristic curves show the contact service life of contactors when switching resistive and inductive three-phase loads (AC-1 / AC-3) as a function of breaking current and rated operational voltage. This requires operating mechanisms that switch at random, i.e. not synchronized with the phase angle of the supply system.

The rated operational current I_e in accordance with utilization category AC-4 (breaking of 6 times the rated operational current) is specified for a contact service life of at least 200,000 operating cycles.

If a shorter contact service life is sufficient, the rated operating current I_e/AC-4 can be increased.

In the case of mixed operation, i.e. if normal switching operation (breaking of rated operating current in accordance with utilization category AC-3) is mixed with occasional inching (breaking of the multiple rated operating current in accordance with utilization category AC-4), the service life of the contacts can be calculated approximately with the following formula:

$$X = \frac{A}{1 + \frac{C}{100} \cdot \left(\frac{A}{B} - 1\right)}$$

Characters in the equation:

- X: Contact service life for mixed operation in operating cycles
- A: Contact service life for normal operation ($I_a = I_e$) in operating cycles
- B: Contact service life for inching (I_a = multiple of I_e) in operating cycles
- C: Proportion of inching operations as a percentage of all operations

Size S2

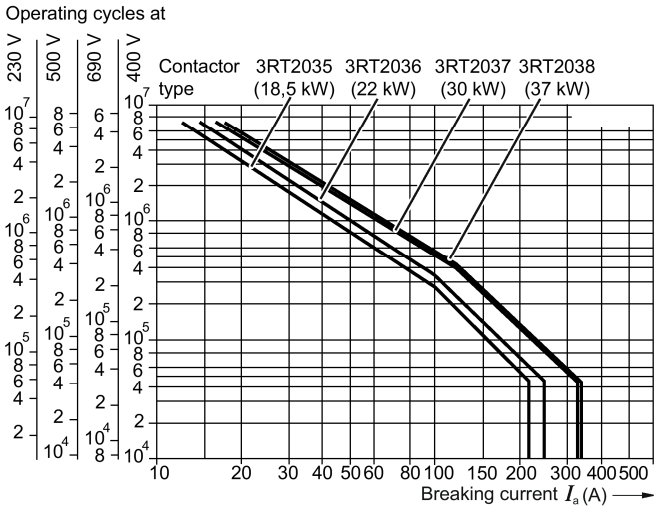

5.15.1.3 Contact service life of auxiliary and main contacts (size S3)

Contact service life of auxiliary contacts

This requires operating mechanisms that switch at random, i.e. not synchronized with the phase angle of the supply system.
The contact service life is essentially dependent on the breaking current.
The characteristic curves apply to:

- Integrated auxiliary contacts on 3RT20
- 3RH2911-., 3RH2921-. auxiliary switch blocks for contactors of size S3.

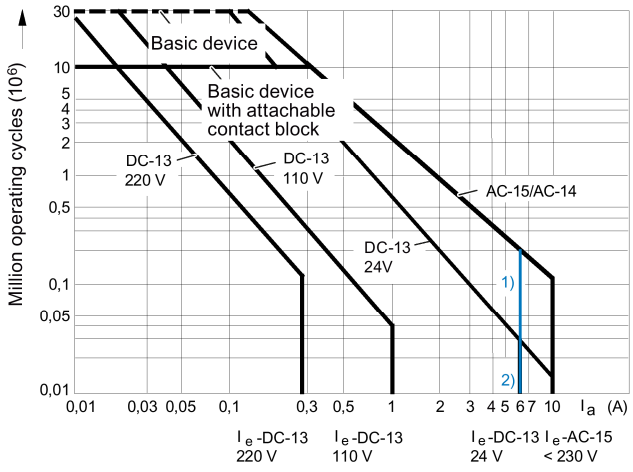

Legend for diagram:
I_a = Breaking current
I_e = Rated operational current

1) Integrated auxiliary contacts and contacts in the auxiliary switch blocks for contactors (size S3): 6 A

2) Contacts in auxiliary switch blocks for contactors size S3: 6 A

Contact service life of the main contacts

The characteristic curves show the contact service life of contactors when switching resistive and inductive three-phase loads (AC-1 / AC-3) as a function of breaking current and rated operational voltage. This requires operating mechanisms that switch at random, i.e. not synchronized with the phase angle of the supply system.

The rated operational current I_e in accordance with utilization category AC-4 (breaking of 6 times the rated operational current) is specified for a contact service life of at least 200,000 operating cycles.

If a shorter contact service life is sufficient, the rated operating current I_e/AC-4 can be increased.

In the case of mixed operation, i.e. if normal switching operation (breaking of rated operating current in accordance with utilization category AC-3) is mixed with occasional inching (breaking of the multiple rated operating current in accordance with utilization category AC-4), the service life of the contacts can be calculated approximately with the following formula:

$$X = \frac{A}{1 + \frac{C}{100} \cdot \left(\frac{A}{B} - 1\right)}$$

Characters in the equation:

- X: Contact service life for mixed operation in operating cycles
- A: Contact service life for normal operation ($I_a = I_e$) in operating cycles
- B: Contact service life for inching (I_a = multiple of I_e) in operating cycles
- C: Proportion of inching operations as a percentage of all operations

Size S3

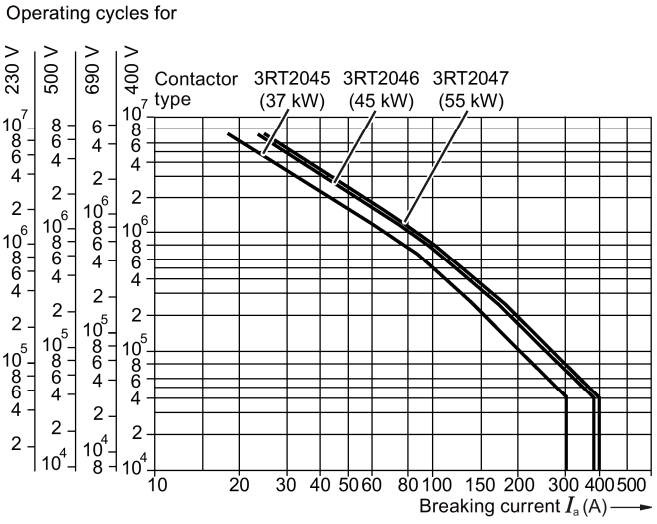

5.15.2 3RT26 capacitor contactors (sizes S00 to S2)

5.15.2.1 Contact service life of auxiliary and main contacts

Contact service life of the auxiliary contacts

This requires operating mechanisms that switch at random, i.e. not synchronized with the phase angle of the supply system.
The contact service life is essentially dependent on the breaking current.
The characteristic curves apply to:

- Integrated auxiliary contacts for 3RT26.
  Integrated auxiliary contacts (size S0) and contacts in the auxiliary switch blocks for contactors (size S00 and S0): 6 A
- 3RH2911-., 3RH2921-. auxiliary switching blocks for contactors of sizes S00, S0 and S2.
  Contacts in the auxiliary switching blocks for contactors of sizes S00 und S0: 6 A

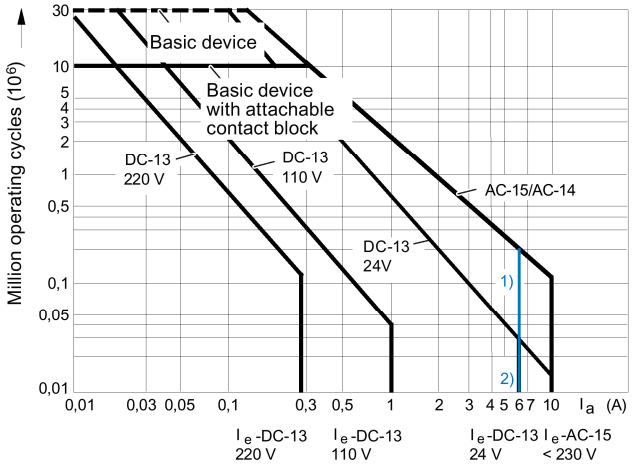

Legend for diagram:
I_a = Breaking current
I_e = Rated operational current

Contact service life of the main contacts

The characteristic curves show the contact endurance of the contactors when switching capacitive loads (AC-6b) depending on the reactive power Q_N and rated operational voltage.

The rated operational current I_e complies with utilization category AC-6b (breaking 1.35 times the rated operational current) and is intended for a contact endurance of at least 150 000 to 200 000 operating cycles.

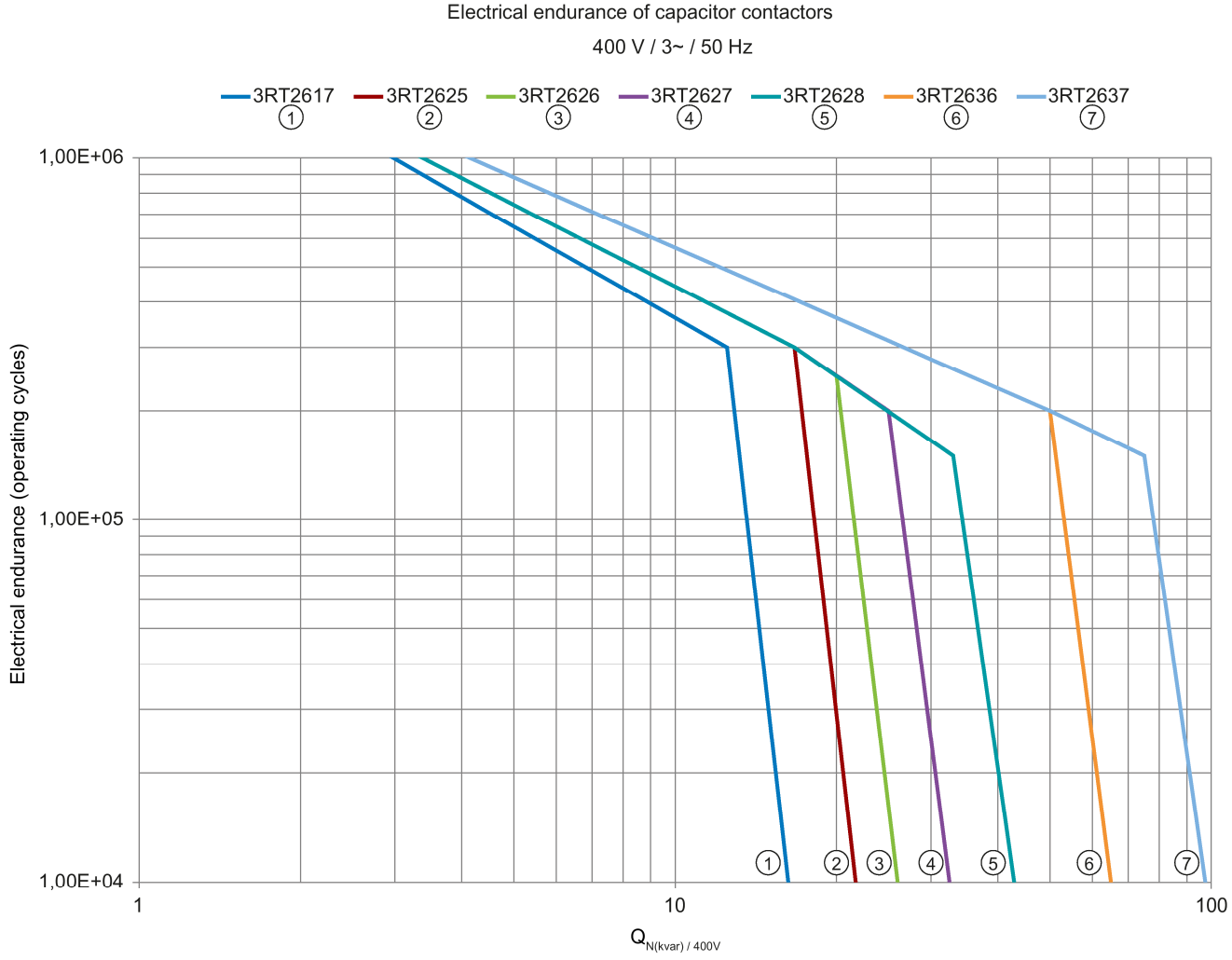

5.15.3 3RT10 power contactors and 3RT12 vacuum contactors (sizes S6 to S12)

5.15.3.1 Mechanical endurance

The mechanical service life of contactors is a crucial criterion for their cost-effective use. This is expressed as the number of operating cycles achieved without loading the current path. While you cannot demand an excessively long service life from breakers that have to work with relatively high contact loads, such as disconnectors and circuit breakers, without impairing their cost effectiveness, contactors are available as specific switching devices for extremely high numbers of switching operations and switching frequencies.

Mechanical service life of the 3RT1 contactors:

- Basic units, sizes S6 to S12: 10 million operating cycles

5.15.3.2 Electrical endurance

Electrical service life of main contacts

The service life of the contact pieces is as follows:

- In the case of rated operational current I_e in accordance with utilization category AC-4 (breaking of 6 times the rated operating current): 200,000 operating cycles
- In the case of mixed operation, i.e. if normal switching operation (breaking of rated operating current in accordance with utilization category AC-3) is mixed with occasional inching (breaking of the multiple rated operating current in accordance with utilization category AC-4): Operating cycles can be calculated approximately with the following formula:

$$X = \frac{A}{1 + \frac{C}{100} \cdot \left(\frac{A}{B} - 1\right)}$$

Characters in the equation:

- X: contact endurance for mixed operation in operating cycles
- A: Contact service life for normal operation ($Ia = I_e$) in operating cycles
- B: Contact service life for inching (I_a = multiple of I_e) in operating cycles
- C: Inching operations as a percentage of total switching operations

Characteristic curve: Contact service life of the main contacts

The following characteristic curves show the contact service life of contactors when switching resistive and inductive three-phase loads (AC-1/AC-3) as a function of breaking current and rated operational voltage. This requires operating mechanisms that switch at random, i.e. not synchronized with the phase angle of the supply system.

I_a= Breaking current

I_e= Rated operational current

P_N= Rated power of three-phase motors with squirrel-cage rotor at 400 V

Sizes S6 to S12

Operating cycles at:

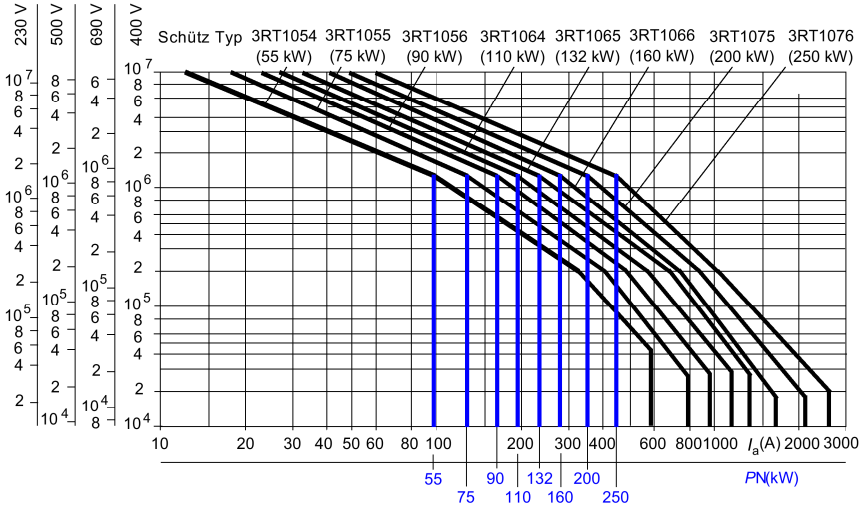

3RT12 vacuum contactors sizes S10 and S12

Operating cycles at:

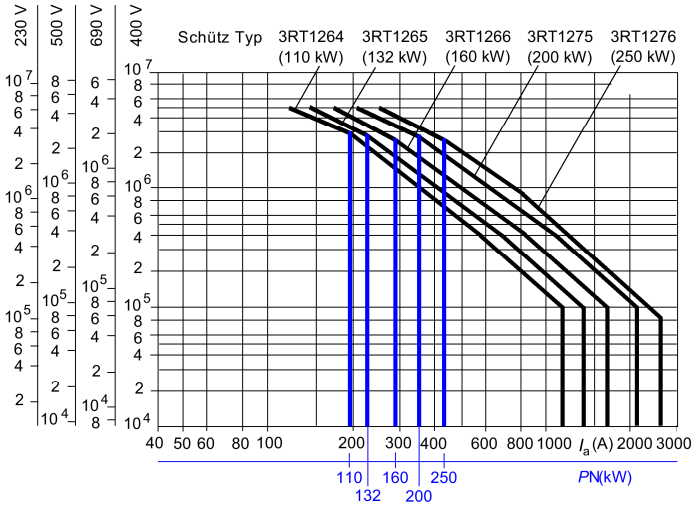

Characteristic curve: Contact service life of the auxiliary contacts

The contact service life is dependent on the breaking current. This requires operating mechanisms that switch at random, i.e. not synchronized with the phase angle of the supply system.

The characteristic curves apply to:

- 3RH1921 auxiliary switch blocks for contactors of sizes S6 to S12

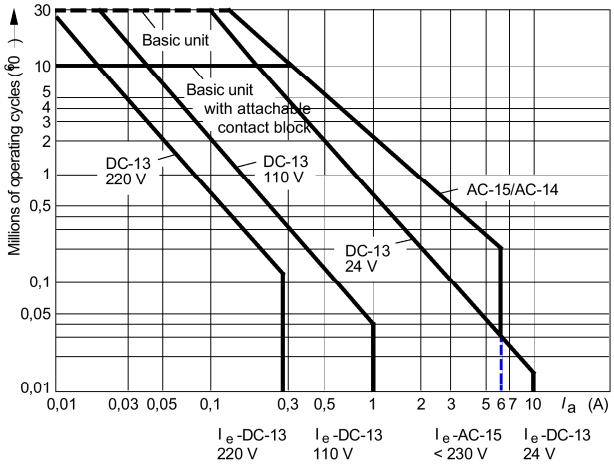

Mounting

6

6.1 Mounting

6.1.1 Mounting options

Note the following information when mounting contactors:

- If foreign bodies (such as drillings) can reach the devices, the contactors must be covered during mounting.
- If there is a risk of pollution, heavy dust deposits, or an aggressive atmosphere at the mounting location, the contactors must be installed in an enclosure.
- Dust deposits must be vacuumed away.

Mounting options

The following mounting types are available for the contactors:

- Snapping onto a 35 mm standard mounting rail according to EN 60715. (Sizes S00 ... S3 only)
- Screwing onto a mounting plate

Side-by-side mounting

Up to an ambient temperature of 60 °C, derating is not necessary for all contactors even in the case of side-by-side mounting. In the case of contactors with extended operating range (0.7 to 1.25 x U_s) that operate via a series resistor, side-by-side mounting is permissible up to an ambient temperature of +70 °C.

6.1.2 Mounting position

The contactors are dimensioned for operation on a vertical mounting plane. The following mounting positions are permitted:

Permissible mounting positions for the contactors:

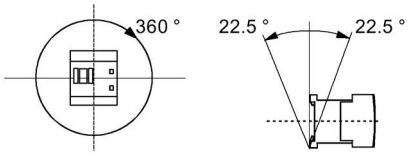

Figure 6-1 Mounting positions for sizes S00, S0, S2 and S3

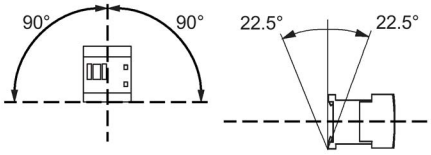

Figure 6-2 Mounting positions for sizes S6, S10, S12



Figure 6-3 Mounting position 3RT12 vacuum contactor

Vertical mounting

Special versions of the 3RH2 contactor relays and 3RT power contactors are required for vertical mounting. This special version can be requested from Technical Assistance (http://www.siemens.com/sirius/technical-assistance).

6.1.3 Mounting on mounting plate / wall mounting

Screw mounting size S00

The following figure shows the mounting of a contactor of size S00 on a base plate or a panel.

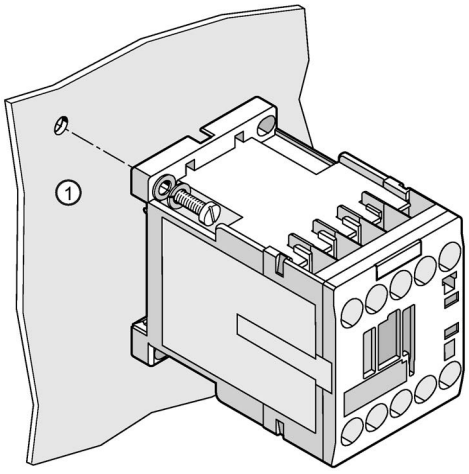

① Using two M4 screws, plain washers, and spring washers, screw the contactor tight into the designated drill holes diagonally.
Maximum tightening torque 1.2 to 1.6 Nm

Screw mounting size S0

The following figure shows the mounting of a contactor of size S0 on a base plate or a panel.

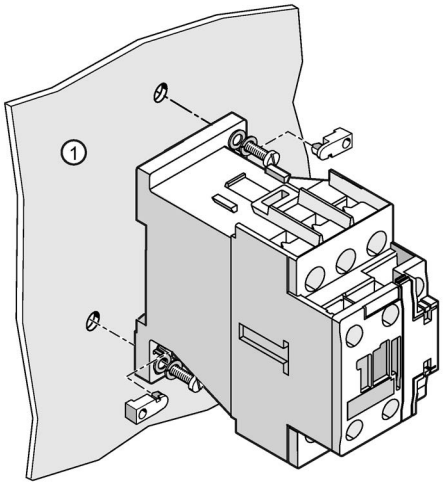

① Screw the contactor tight diagonally into the openings provided using two M4 screws, plain washers and spring washers.

Maximum tightening torque 1.2 to 1.6 Nm

You can use the 3RT1926-4P screw mounting adapter to make size S0 contactors easier to mount, if necessary, (e.g. in the case of vertical access when using an insulated screwdriver). Fit the adapters in the horizontal installation position.

Screw mounting size S2

The following figure shows the mounting of a contactor of size S2 on a base plate or a panel.

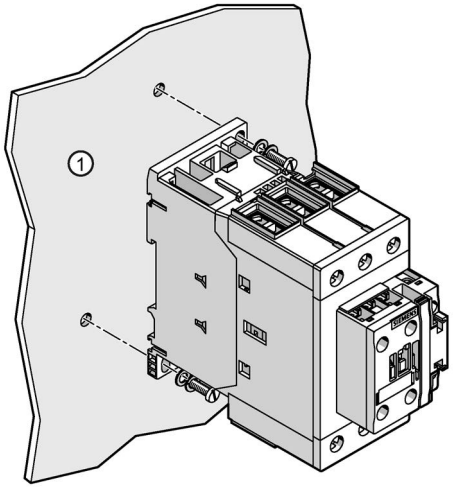

① Screw the contactor tight diagonally into the openings provided using two M4 screws, plain washers and spring washers.

Maximum tightening torque 1.2 to 1.4 Nm

Screw mounting size S3

The following figure shows the mounting of a size S3 contactor on a base plate or a panel.

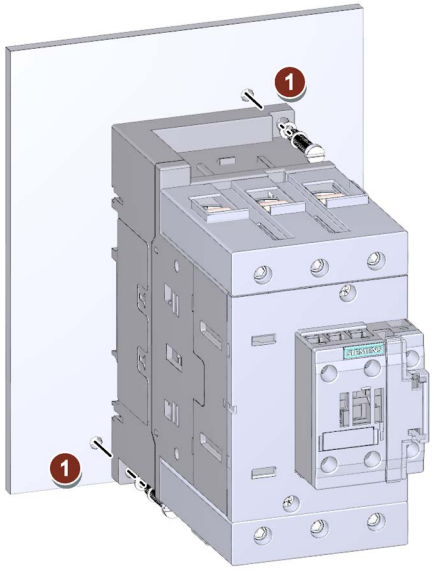

① Screw the contactor tight diagonally into the openings provided using two M4 screws, plain washers and spring washers.
Maximum tightening torque 1.2 to 1.4 Nm

Screw mounting sizes S6 - S12

The following figure shows the mounting of contactors of sizes S6 - S12 on a base plate or a panel.

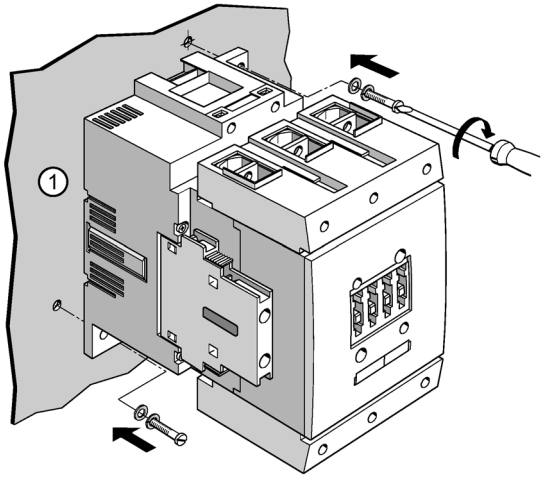

① Screw the contactor tight diagonally into the openings provided using two screws, plain washers and spring washers.

6.1.4 Snapping onto DIN rail (snap-on mounting)

Mounting / disassembling sizes S00 to S3 (snap-on mounting)

Contactors of sizes S00 to S3 can be snapped onto a 35 mm standard mounting rail.

Mounting / disassembling size S00 (snap-on mounting)

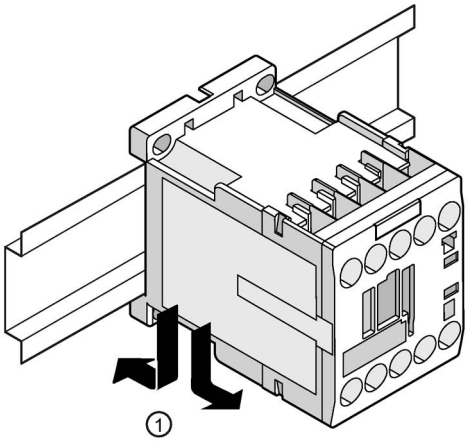

① Position the device on the top edge of the mounting rail and press it down until it snaps onto the bottom edge of the rail.

To disassemble the device, press it down, pushing against the mounting springs, and swivel the device to remove it.

Mounting / disassembling size S0 (snap-on mounting)

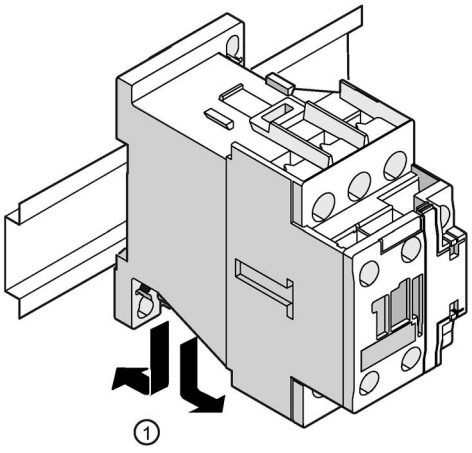

① Position the device on the top edge of the DIN rail and press down until it snaps onto the bottom edge of the DIN rail.

To disassemble the device, press it down, pushing against the mounting springs, and swivel the device to remove it.

Mounting / disassembling sizes S2 (snap-on mounting)

Size S2 contactors can be snapped onto 35 mm standard mounting rails according to EN 60715.

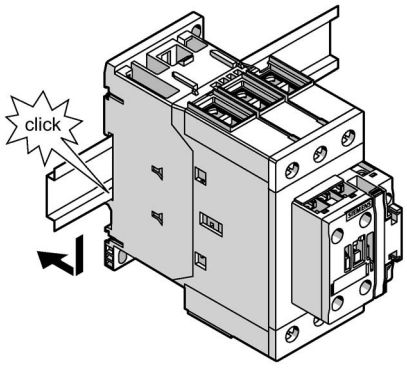

① Position the device on the top edge of the DIN rail and press down until it snaps onto the bottom edge of the DIN rail.

Disassembling size S2

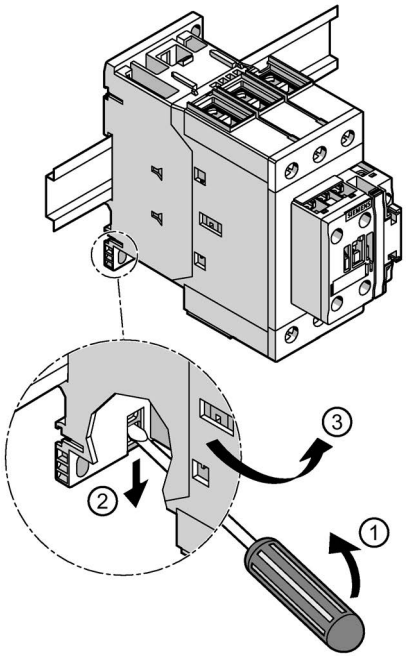

①/② To disassemble, press the locking device down with a screwdriver.

③ Press the device down, pushing against the mounting springs, and swivel the device to remove it.

Mounting / disassembling size S3 (snap-on mounting)

Size S3 contactors can be snapped onto 35 mm standard mounting rails according to EN 60715, or 75 mm mounting rails.

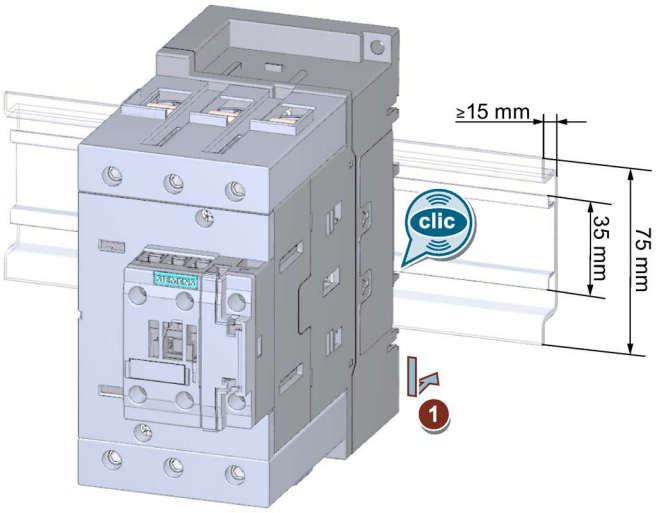

① Position the device on the top edge of the mounting rail and press it down until it snaps onto the bottom edge of the rail.

Disassembling size S3

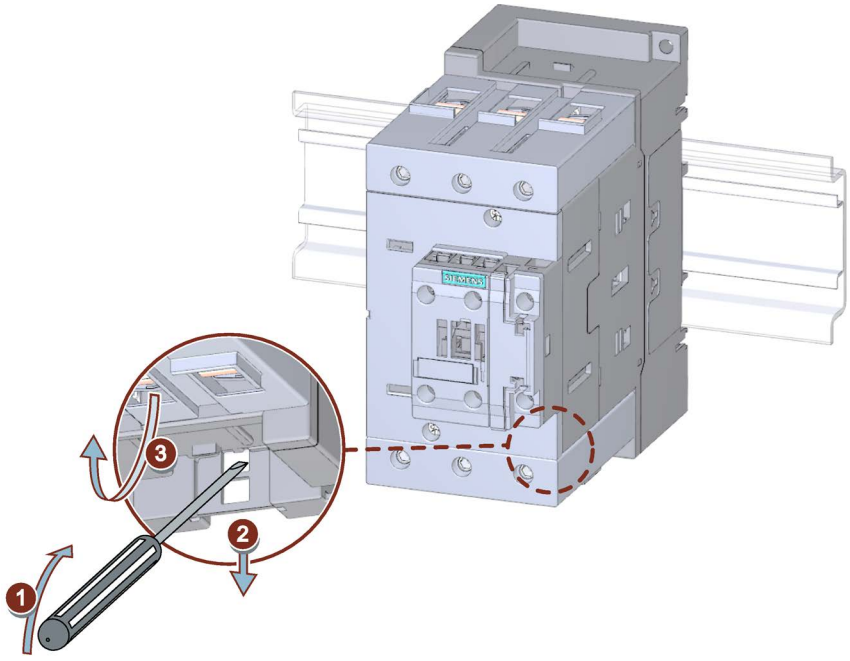

①/② To disassemble, press the locking device down with a screwdriver.

③ Press the device down, pushing against the mounting springs, and swivel the device to remove it.

6.2 Replacing solenoid coils

6.2.1 Replacing solenoid coils for size S0

The solenoid coils on size S0 to S12 contactors can be replaced. The illustration below shows how to replace the solenoid coil on a size S0 contactor with an AC coil.

Note

On size S0, the solenoid coils can only be replaced for AC devices.

Replacing a solenoid coil (size S0/AC)

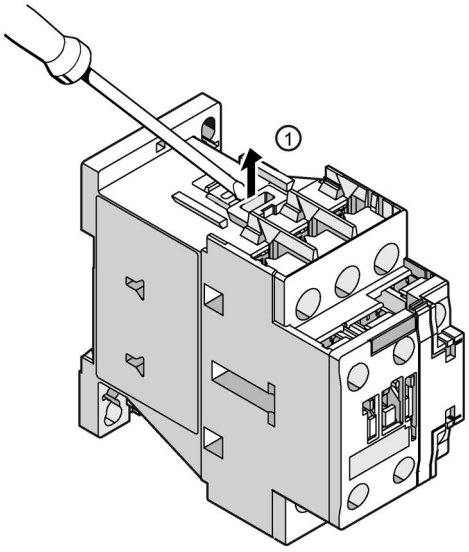

① Use a screwdriver to lift up the retaining clips between the rear and front halves of the contactor.

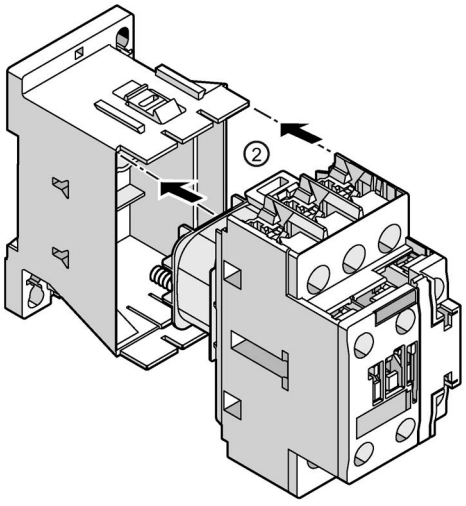

② Push the two halves of the contactor apart.

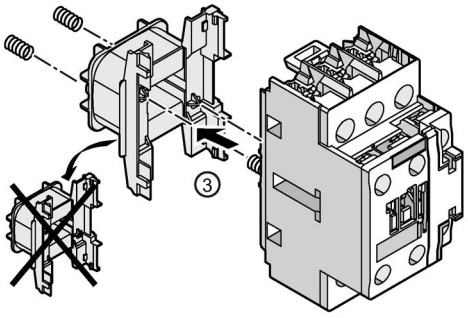

③ Take the solenoid coil out of the front half of the contactor.

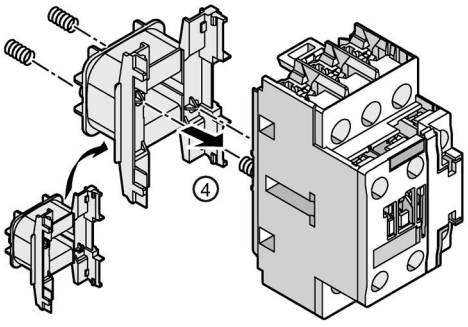

④ Insert the new solenoid coil. In doing so, make sure that the springs between the solenoid coil and the front half of the contactor are properly located on the support.

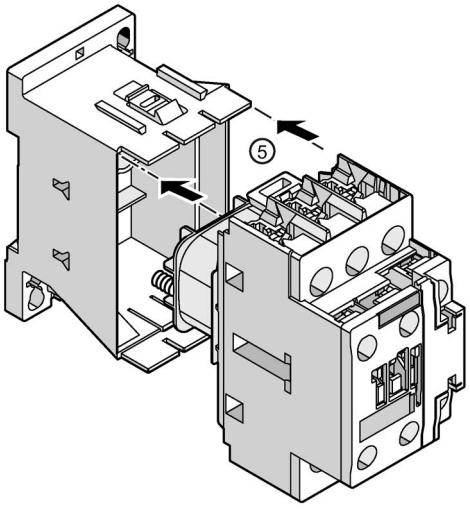

⑤ Reattach the front part of the contactor onto the rear half until the retaining clips engage.

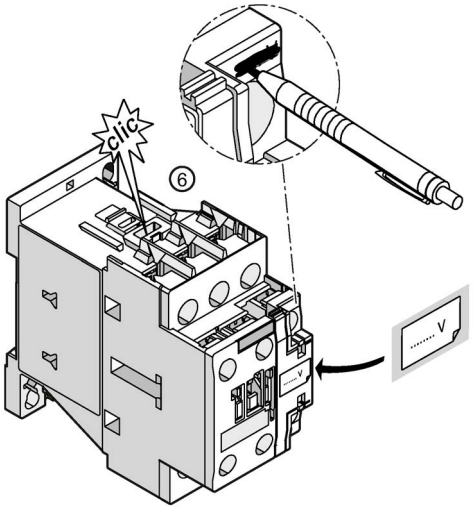

⑥ Write the coil voltage of the newly inserted operating mechanism onto the label supplied and stick the label onto the front panel of the contactor, as shown in the diagram.

Thoroughly cross out the coil voltage stated above terminal A1.

6.2.2 Replacing solenoid coils for size S2

The solenoid coils on size S0 to S12 contactors can be replaced. The figure below shows how to replace the solenoid coil on a contactor with an AC coil.

Note

On size S2, the solenoid coils can be replaced for AC devices (AC-AC) and for AC / DC devices (AC / DC - AC / DC).

Replacing a solenoid coil (size S2/AC and AC/DC)

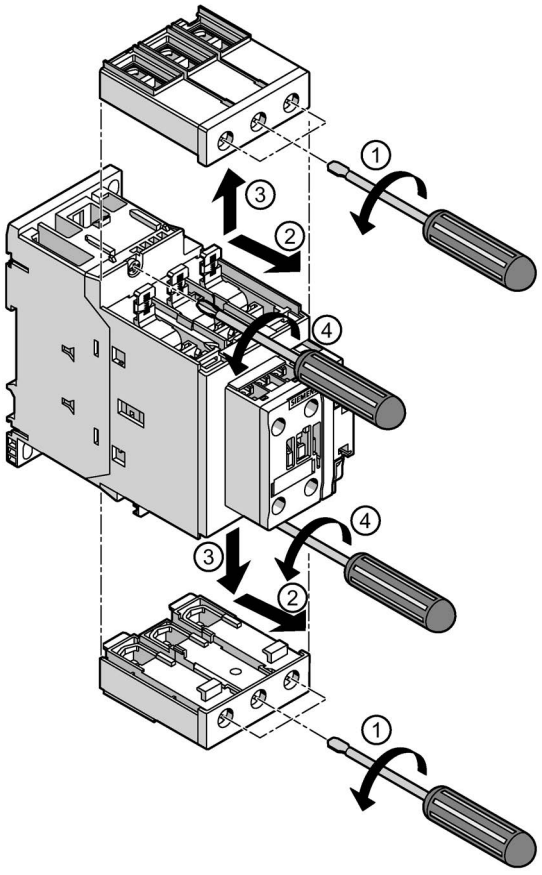

①/②/③/④ Use screwdrivers to undo the screws of the detachable terminals. Pull the terminals forward slightly and remove the terminals.

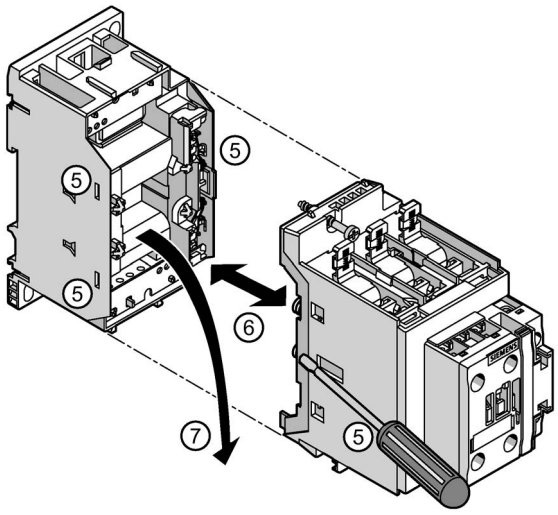

⑤/⑥/⑦ Push the two halves of the contactor apart. Note the lateral latching here. Take the solenoid coil out of the rear half of the contactor.

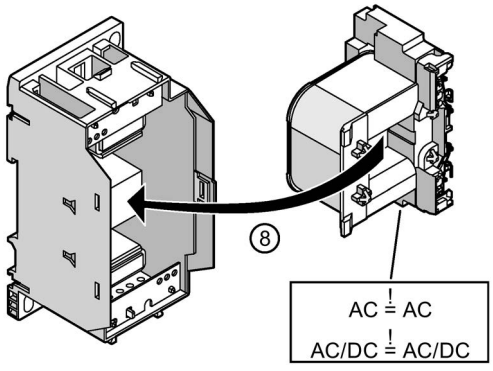

⑧ Insert the new solenoid coil.

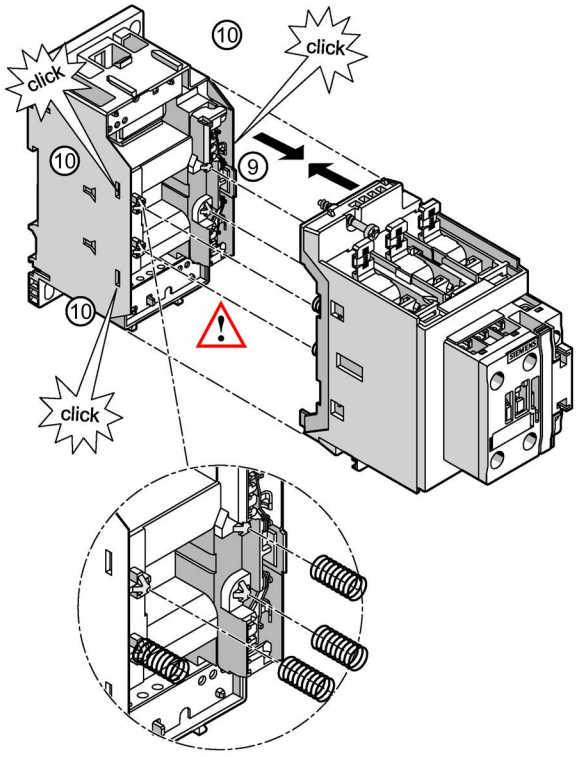

⑨/⑩ Slide the front part of the contactor back onto the rear half until the retaining clips engage. In doing so, make sure that the springs between the solenoid coil and the front half of the contactor are properly located on the support.

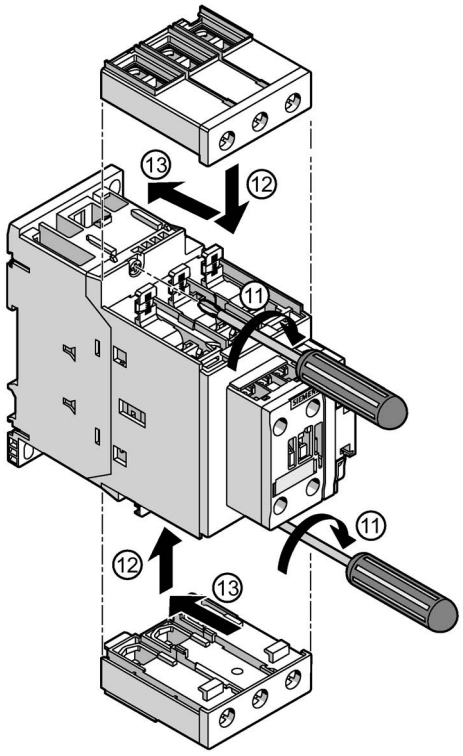

⑪/⑫/⑬ Screw the two contactor halves together (1.1 - 1.3 Nm).
Place the terminals on the device and and push them towards the rear. Make sure the terminals engage.

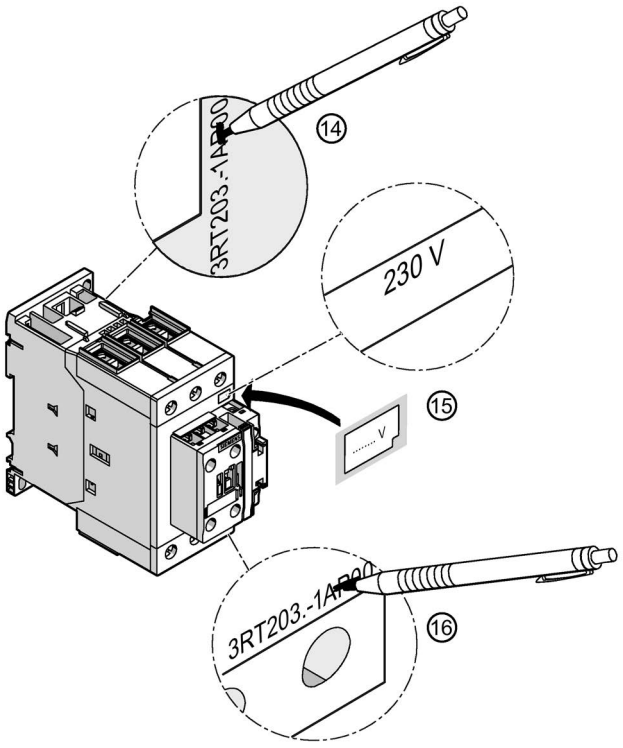

⑭/⑮/⑯ To label the coil voltage of the newly inserted operating mechanism, cover the control supply voltage specification with the labels supplied. Thoroughly cross out the article number.

6.2.3 Replacing solenoid coils for size S3

The solenoid coils on size S0 to S12 contactors can be replaced. The figure below shows how to replace the solenoid coil on a contactor with an AC coil.

Note

On size S3, the solenoid coils can be replaced for AC devices (AC-AC) and for AC/DC devices (AC/DC -AC/DC).

Replacing a solenoid coil (size S3 / AC and AC / DC)

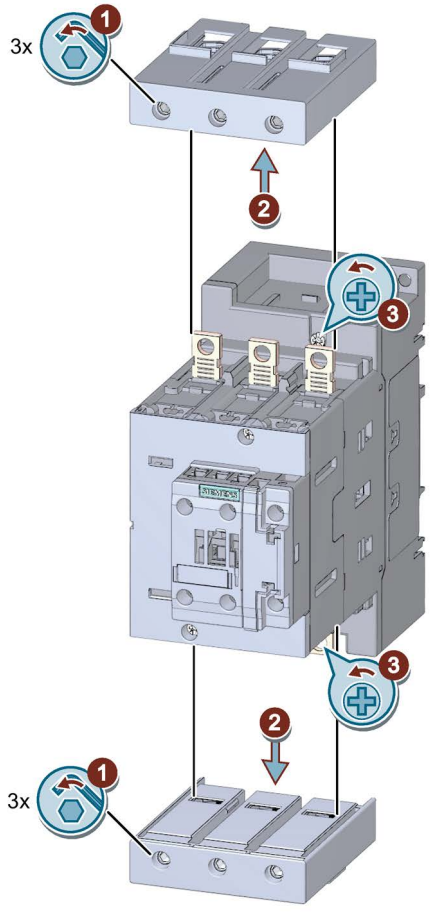

①/② Undo the screws of the detachable terminals.
Pull the terminals forward slightly and remove the terminals.

③ Use screwdrivers to undo the screws of the upper and lower parts of the enclosure

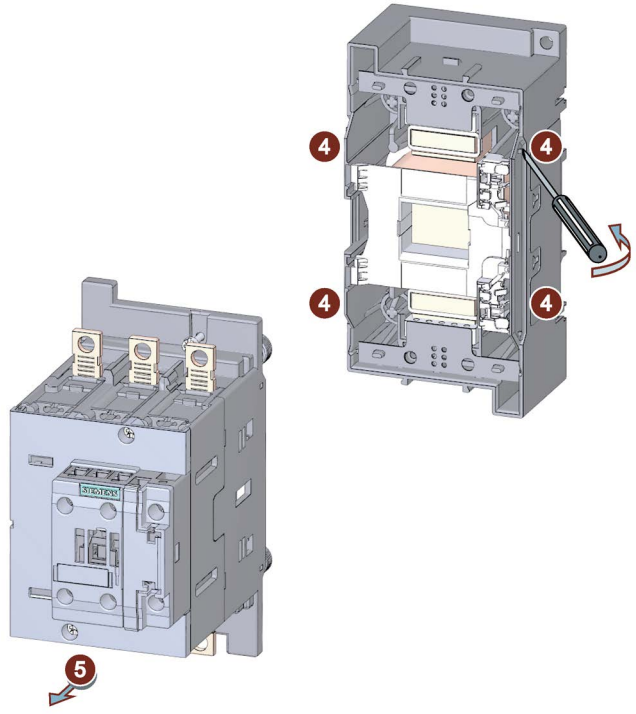

④ Open the latches of the contactor
⑤ Push the two halves of the contactor apart.

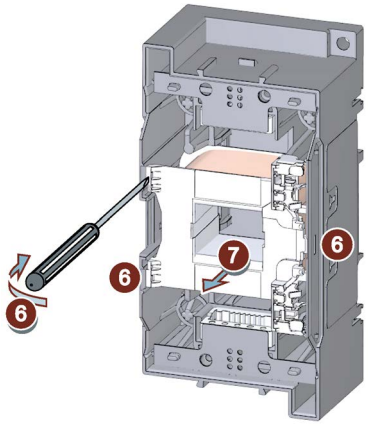

⑥ Lever the solenoid coil out of the carrier
⑦ Remove the solenoid coil.

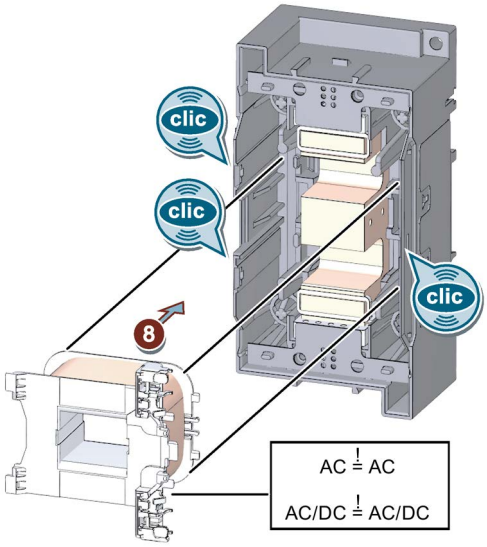

⑧ Insert the new solenoid coil.

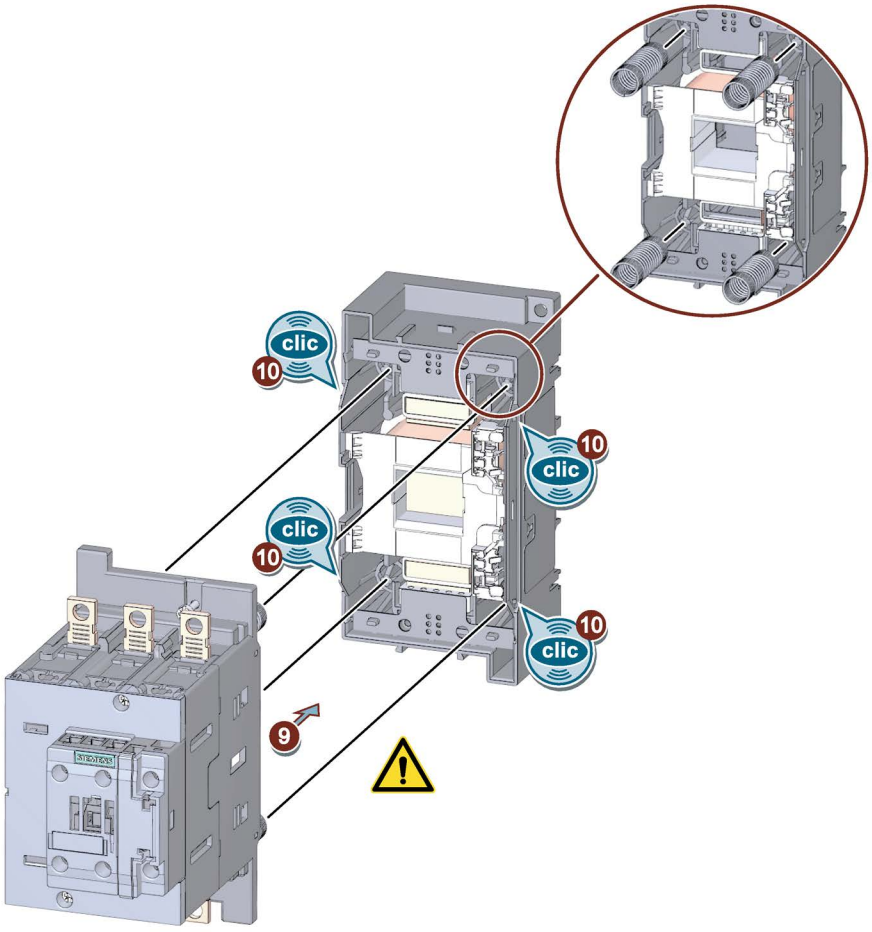

⑨/⑩ Slide the front part of the contactor (upper part of the enclosure) back onto the rear half (lower part of the enclosure) until the retaining clips engage.

In doing so, make sure that the springs between the solenoid coil and the front half of the contactor are properly located on the support.

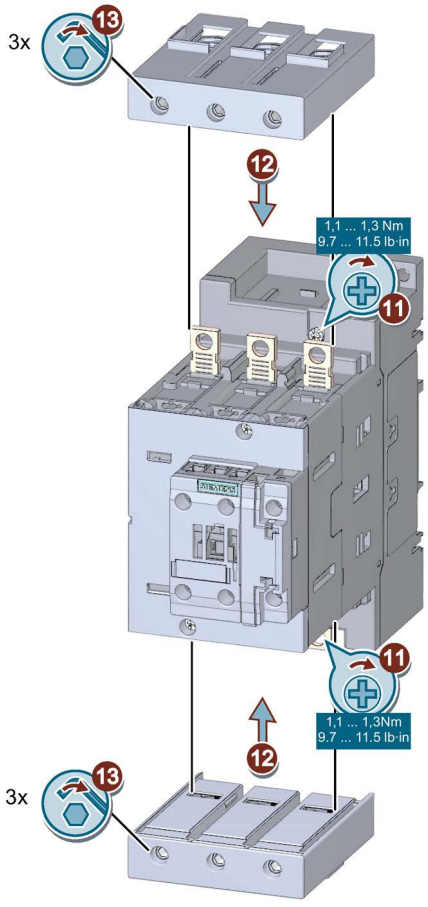

⑪ Screw the two contactor halves together (1.1 - 1.3 Nm).

⑫/⑬ Place the terminals on the device and and push them towards the rear. Make sure the terminals engage.

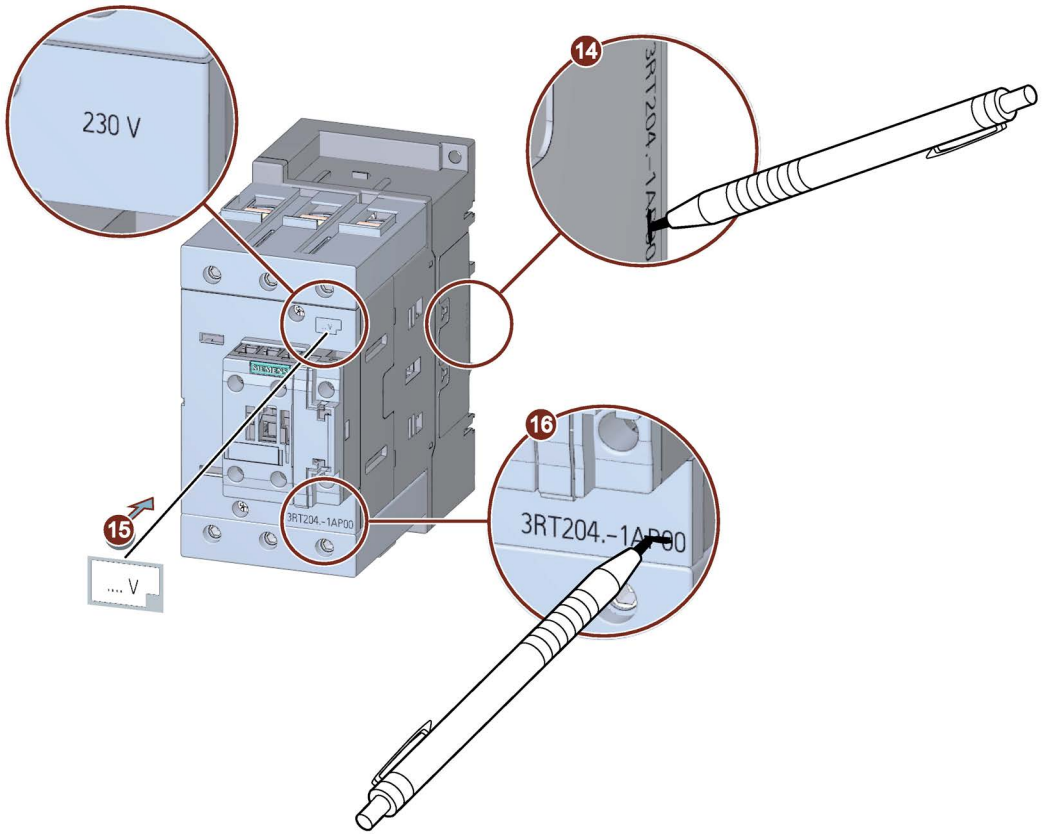

⑭/⑮/⑯ To label the coil voltage of the newly inserted operating mechanism, cover the control supply voltage specification with the labels supplied. Thoroughly cross out the article number.

6.2.4 Replacing solenoid coils for sizes S6-S12

Withdrawable coils

For simple coil replacement in sizes S6 to S12, the solenoid coil can be pulled out after the release mechanism has been actuated and can be replaced by any other coil of the same size.

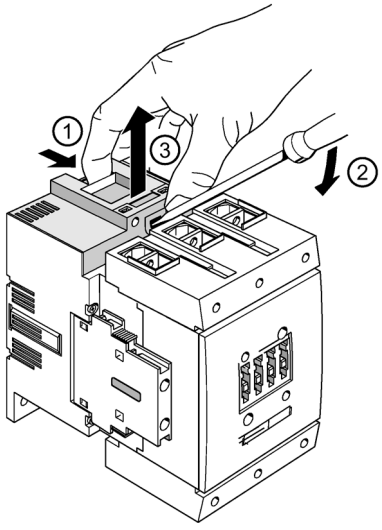

①/②/③ For easier removal of the coil, insert a screwdriver into the recess provided and gently lever.

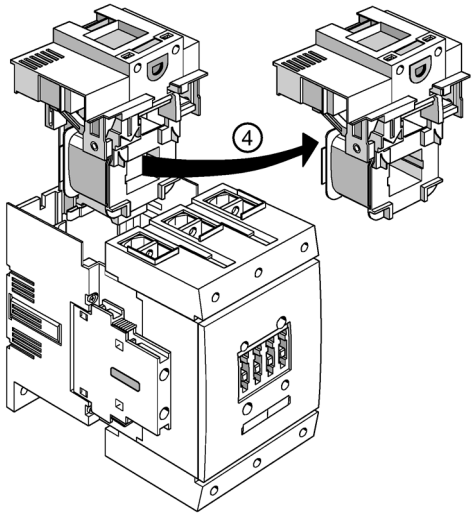

④ Removing the withdrawable coil.

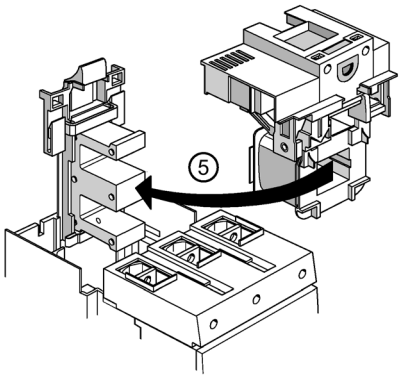

⑤ Insert a new withdrawable coil.

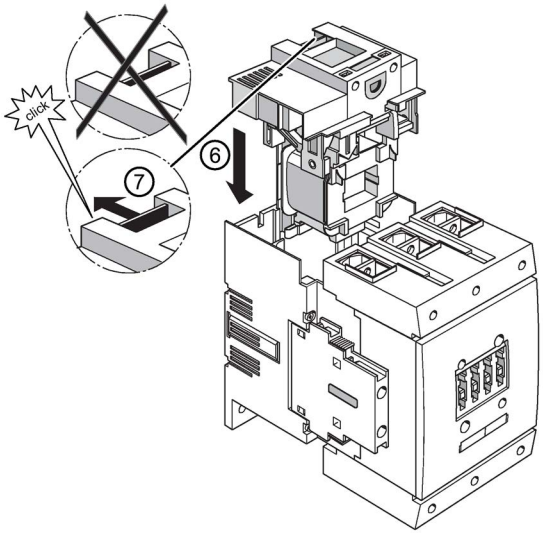

⑥/⑦ When re-installing, ensure that the interlock clearly engages again:

Configuration note

If the coil is also to be replaced when the contactor is installed, a clearance upwards of approximately 120 mm (for contactors of size S6) or 150 mm (size S10 and S12) must be taken into account when configuring.

Identical solenoid operating mechanisms

Regardless of the performance level, the solenoid operating mechanisms and thus the withdrawable coils within one size are identical, and in the case of size S12 also between air-break contactors and vacuum contactors.

Identical solenoid operating mechanisms / withdrawable coils (×):

Size	Type	
	3RT10 and 3RT14 air-break contactors	3RT12 vacuum contactors
S6	X	
S10	X	X
S12	X	X

"Contactors without coil" version

The air-break contactors and vacuum contactors are available across the entire performance range, even without a coil. Depending on requirements, they can be supplemented on-site with coils of the desired actuator type and control circuit voltage (article number of this contactor version: 3RT1...-.LA06).

6.3 Contact piece replacement (sizes S2 to S12)

6.3.1 Contact piece replacement (size S2)

The contact pieces can be replaced in the case of size S2 contactors.

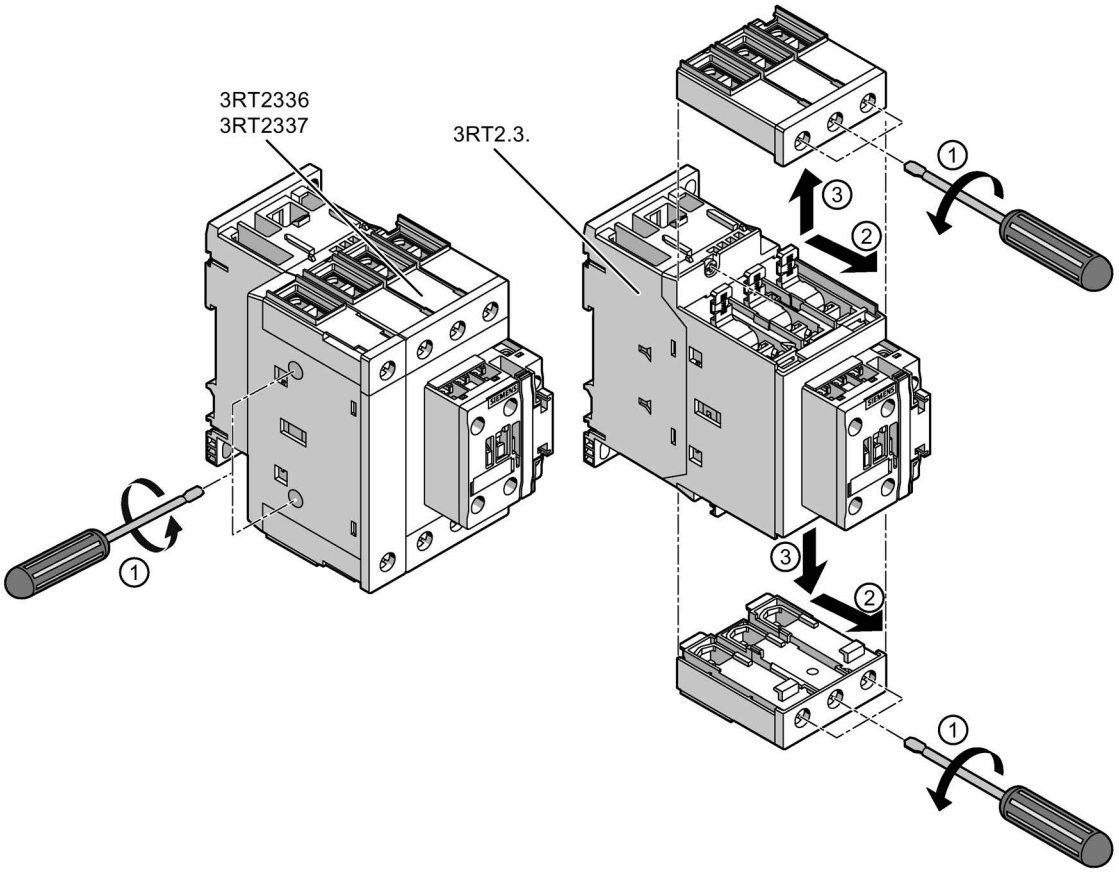

① 3RT2336 /3RT2337: Use a screwdriver to remove the fourth pole.
3RT2.3: Use an Allen key to undo the screws of the detachable terminals.

② Pull the terminals forward slightly.

③ Remove the terminals.

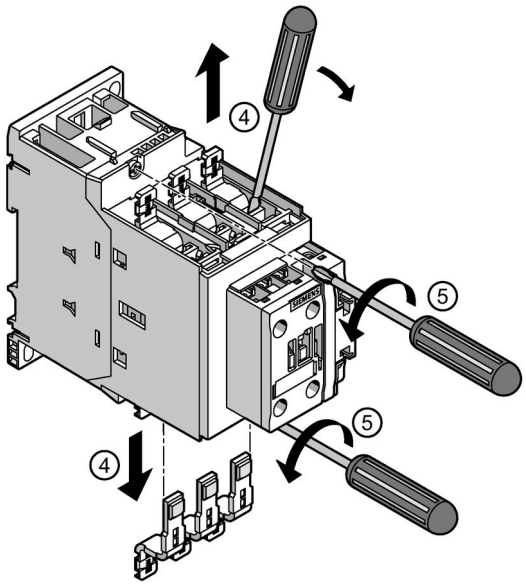

④ Remove the fixed contacts.
⑤ Use a screwdriver to undo the screws.

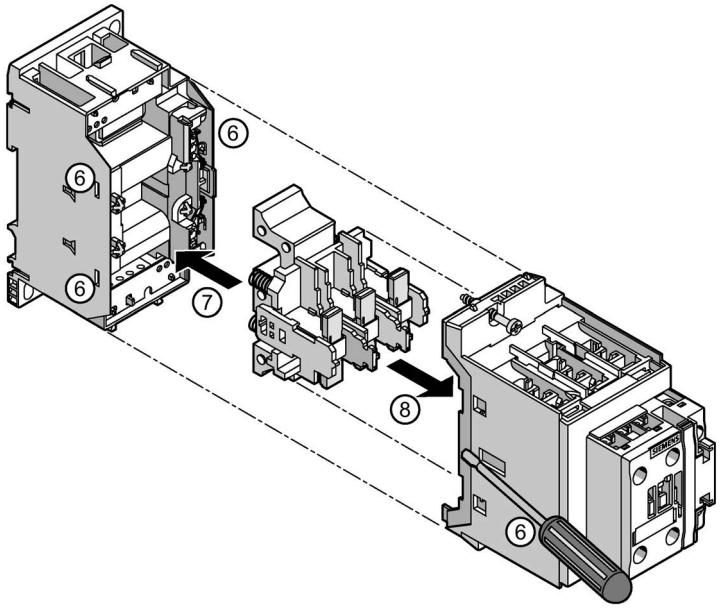

⑥ Push the two halves of the contactor apart. Note the lateral latching here.
⑦/⑧ Take the contact piece carrier of the movable contacts out of the rear half of the contactor.

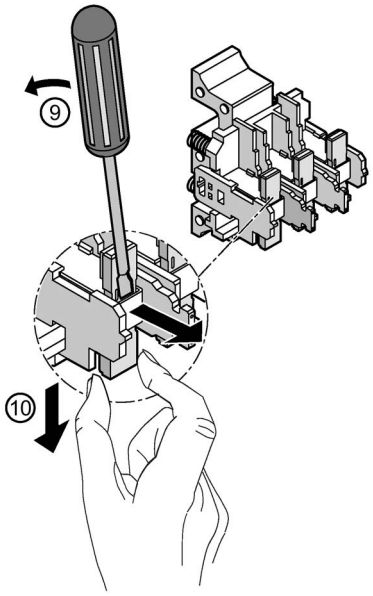

⑨/⑩ Use a screwdriver to lever the fixed contacts from the contact piece carrier.

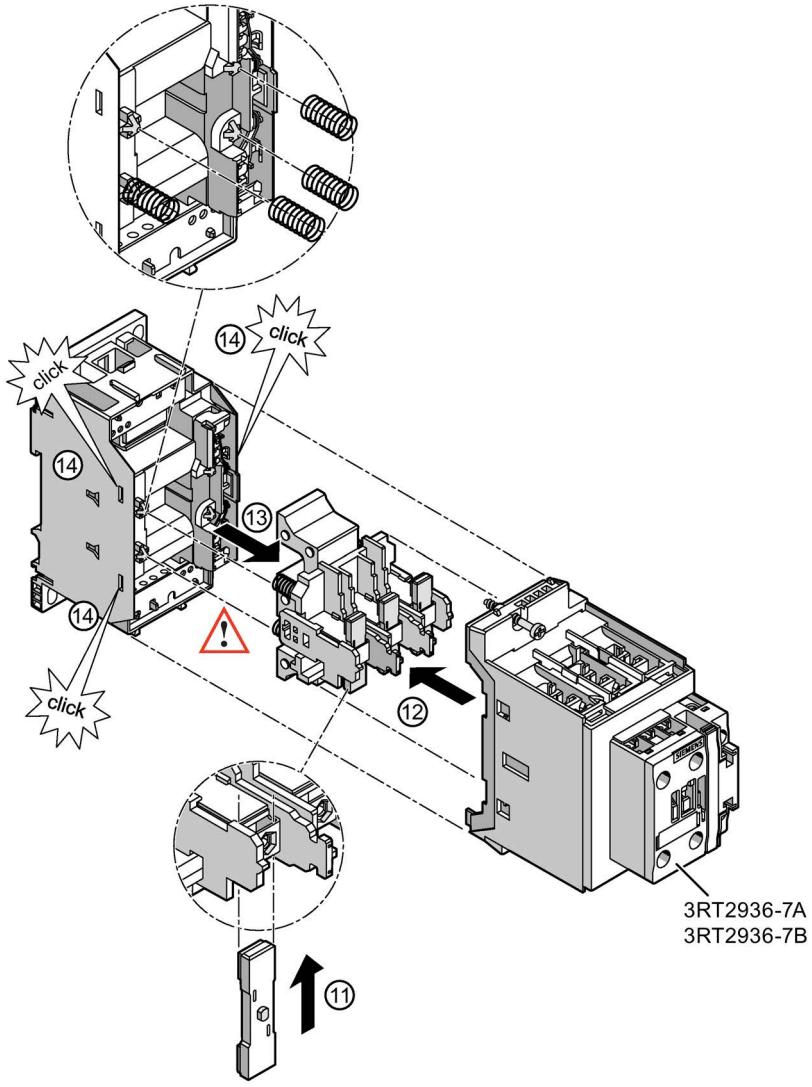

⑪ Slide the new movable contact into the contact piece support.

⑫/⑬/⑭ Slide the front part of the contactor back onto the rear half until the retaining clips engage.

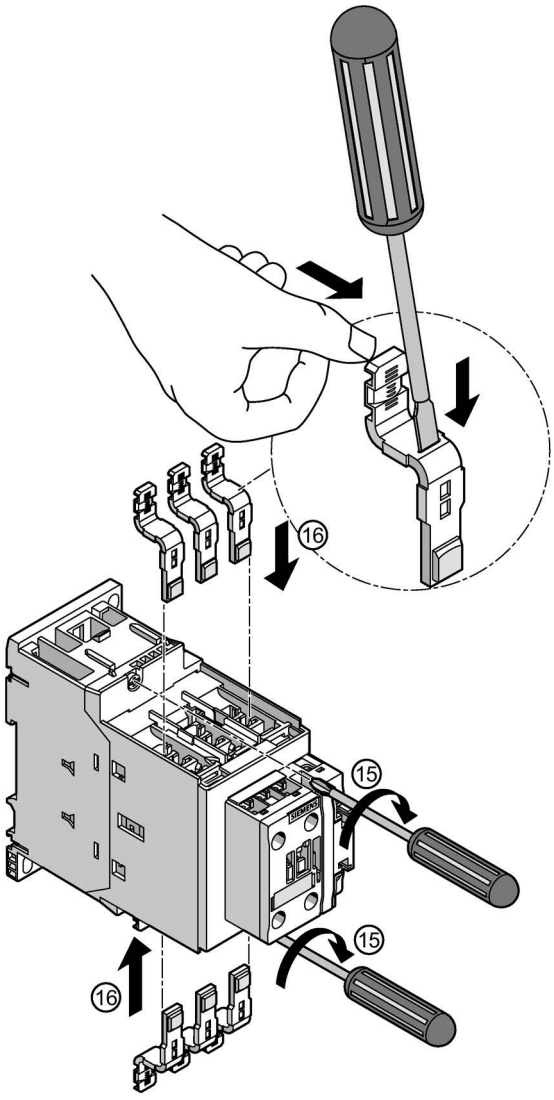

⑮ Slide the new fixed contact into the contact piece support until it is firmly in place.

⑯ Screw the two contactor halves together (1.1 - 1.3 Nm) using a screwdriver.

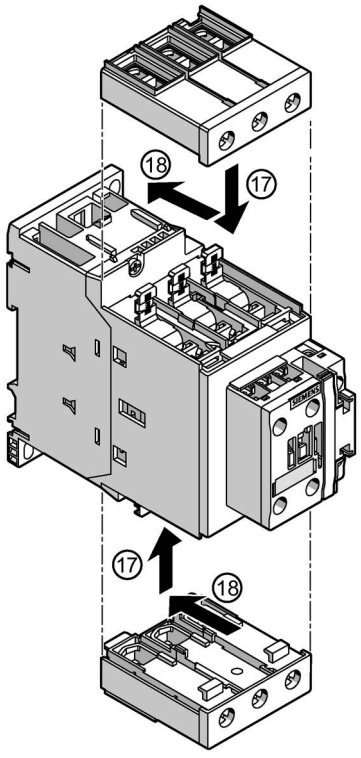

⑰ Place the terminals on the device.

⑱ Slide the terminals back slightly. Make sure the terminals engage.

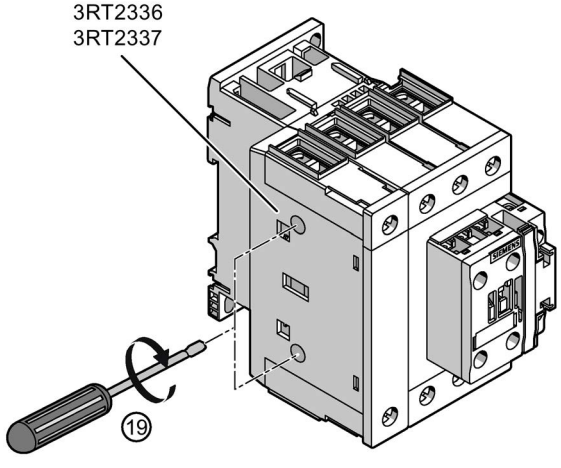

⑲ Screw the fourth pole tight with a screwdriver.

6.3.2 Contact piece replacement (size S3)

The contact pieces can be replaced in the case of size S3 contactors.

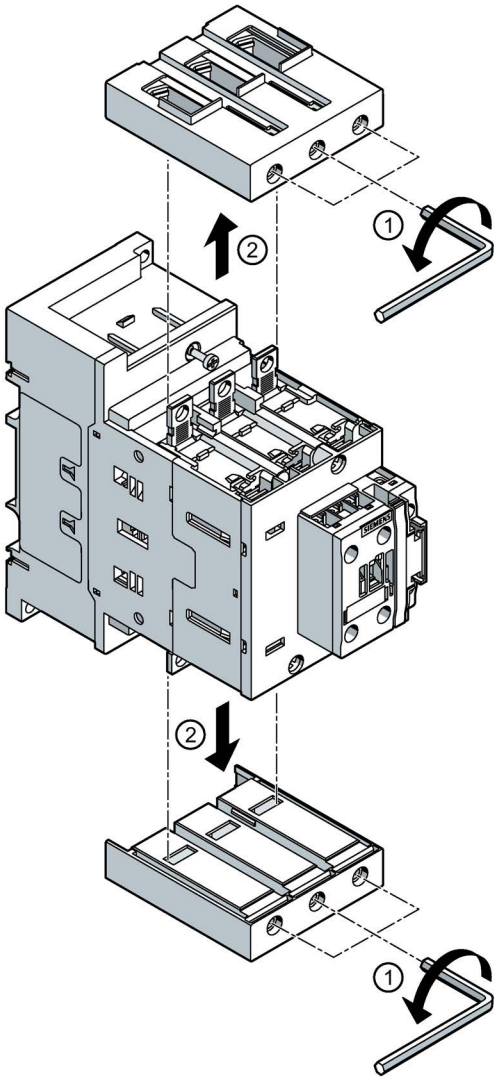

① Use an Allen key to undo the screws of the detachable terminals.
② Remove the terminals.

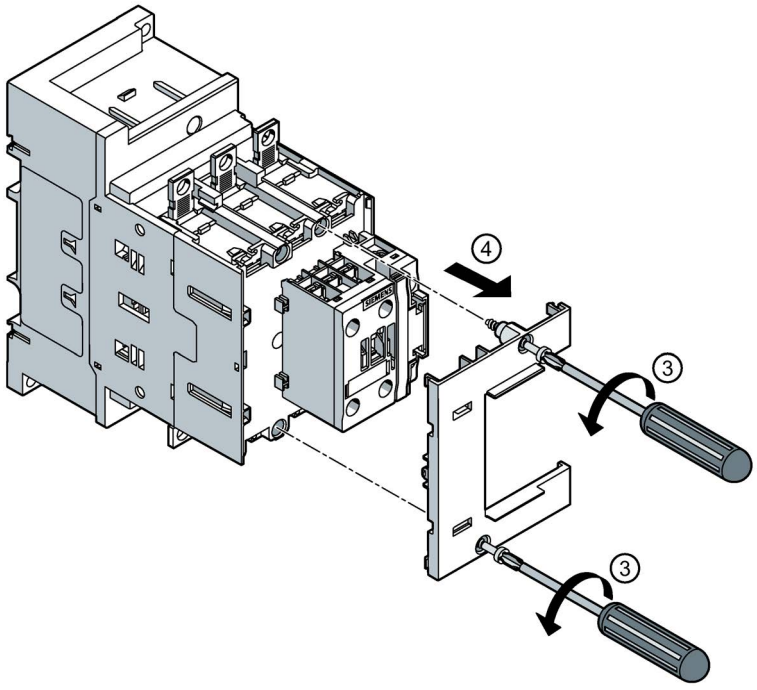

③ Use a screwdriver to undo the screws.
④ Remove the cover.

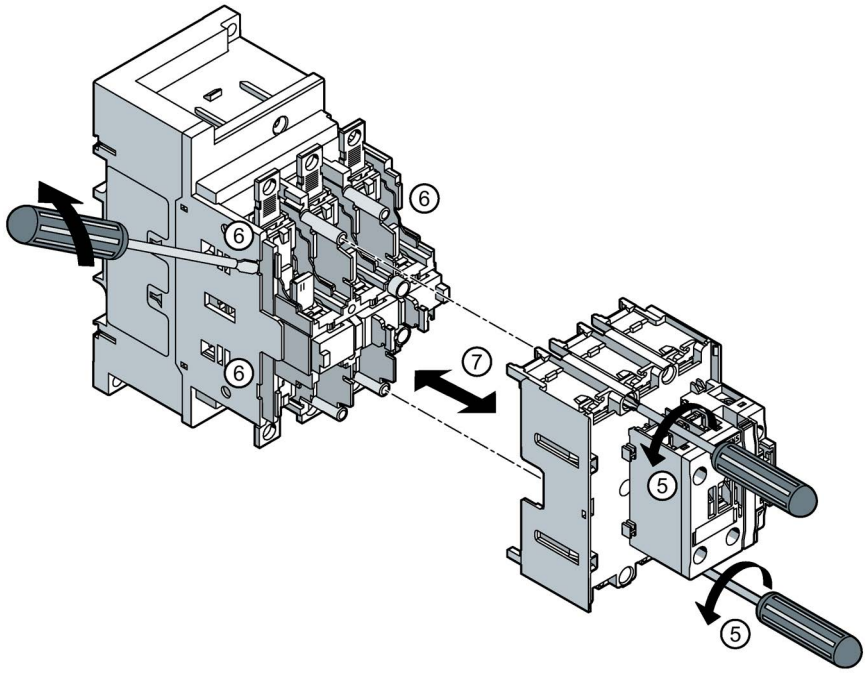

⑤ Use a screwdriver to undo the screws.
⑥ Push the two halves of the contactor apart. Note the lateral latching here.
⑦ Take the contact piece carrier of the movable contacts out of the rear half of the contactor.

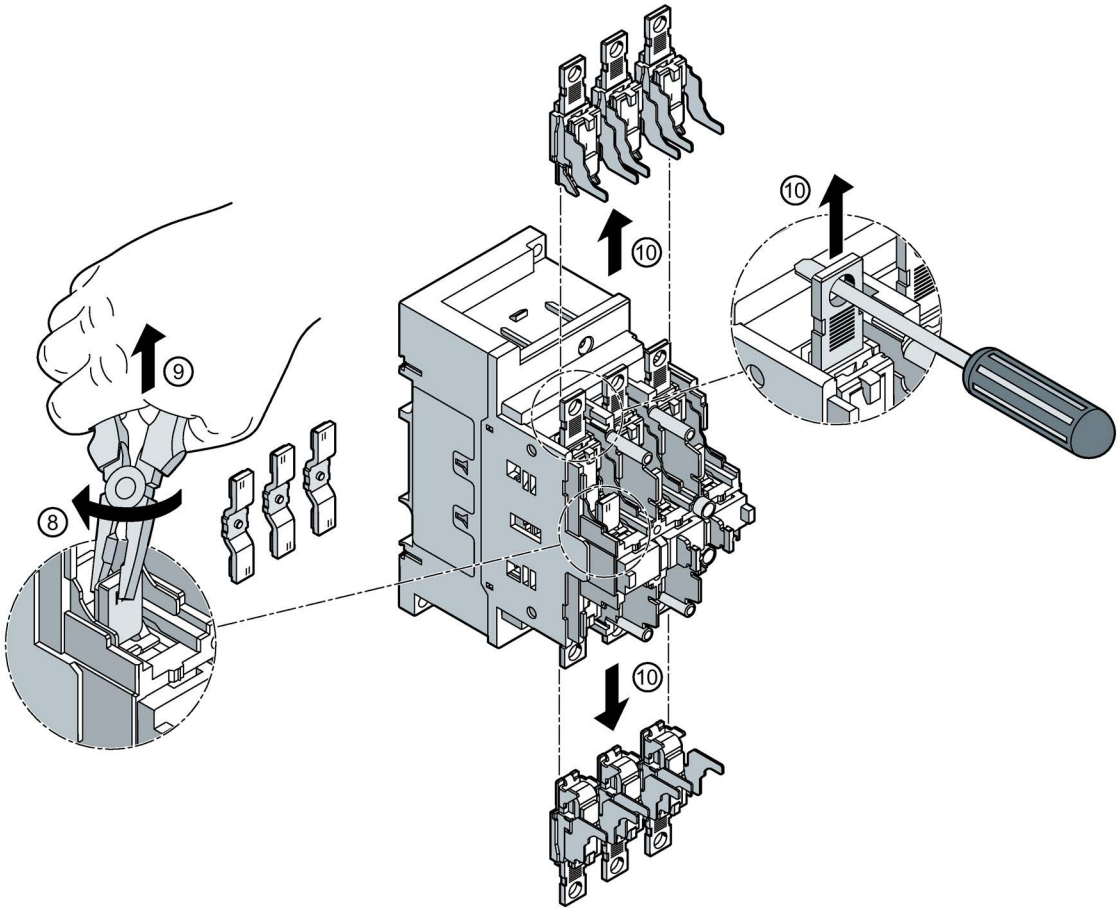

⑧/⑨ Use a pair of pliers to remove the movable contacts from the contact piece carrier.

⑩ Use a screwdriver to lever the fixed contacts from the contact piece carrier.

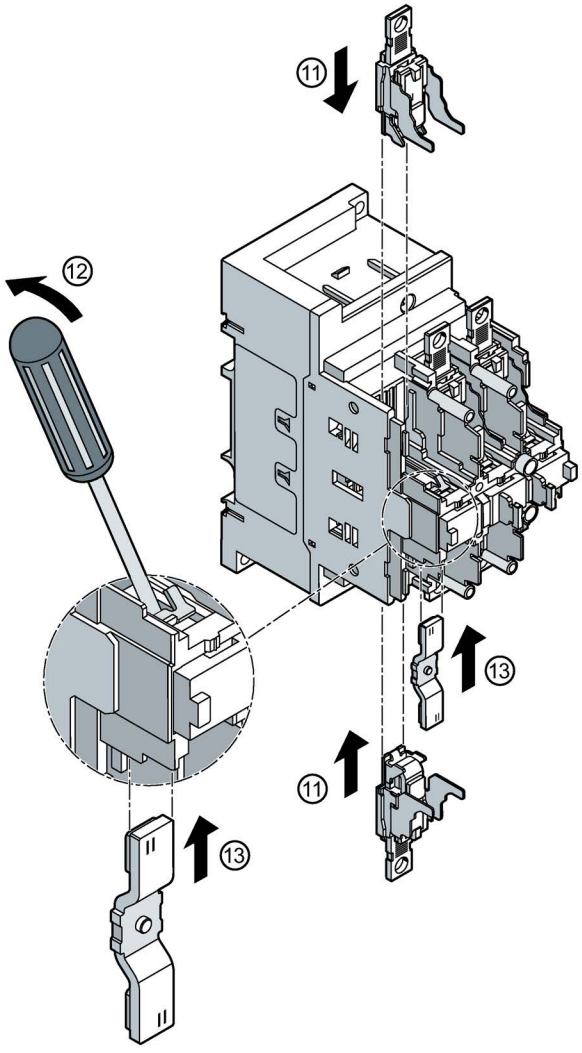

⑪ Slide the new fixed contact into the contact piece support until it is firmly in place.

⑫/⑬ Using a screwdriver, slide the new movable contact into the contact piece support.

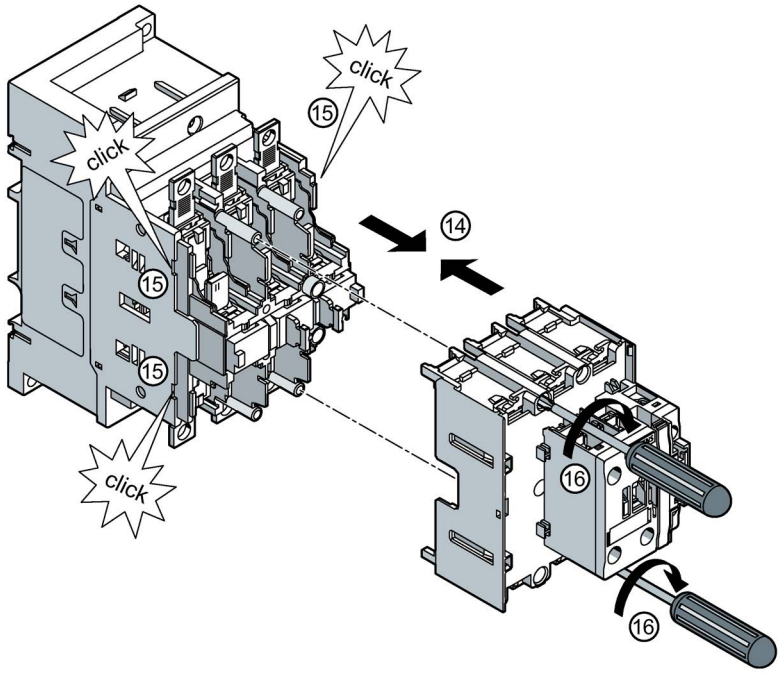

⑭/⑮ Slide the front part of the contactor back onto the rear half until the retaining clips engage.
⑯ Screw the two contactor halves together (1.1 - 1.3 Nm) using a screwdriver.

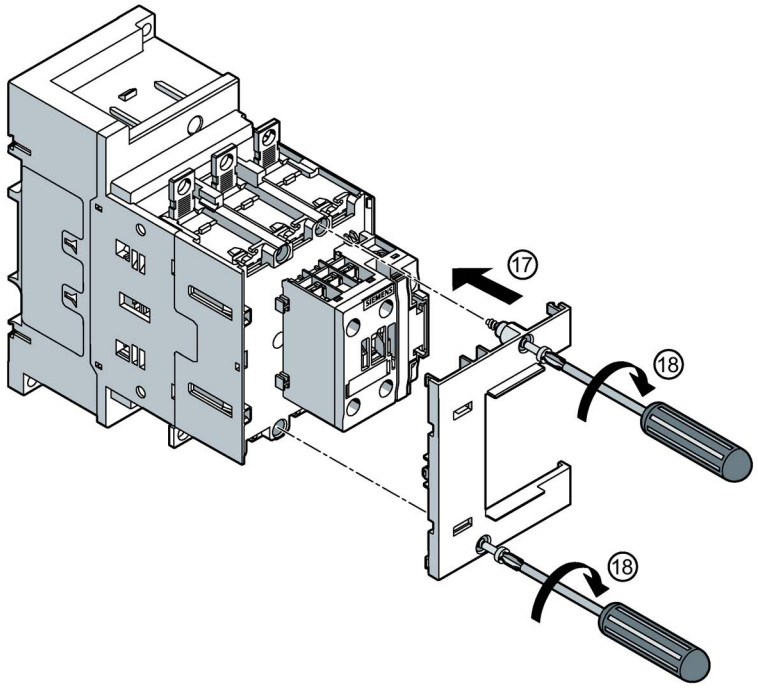

⑰ Mount the cover
⑱ Tighten the screws to secure the cover (1.1 to 1.3 Nm).

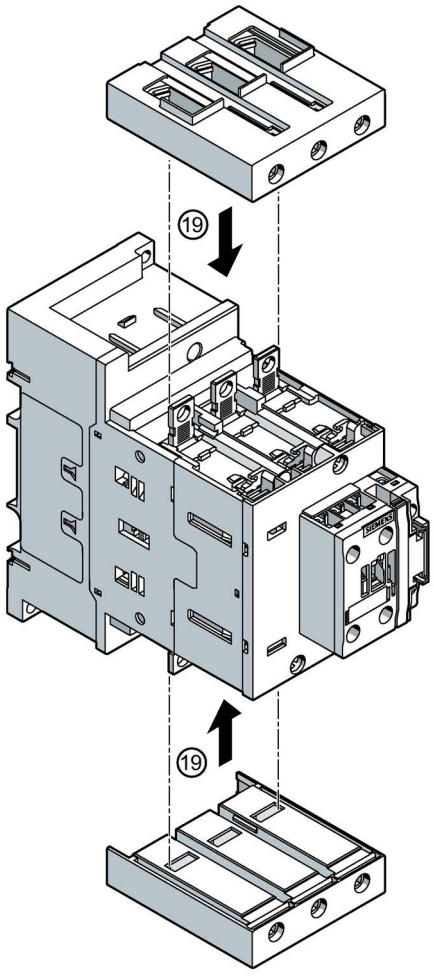

⑲ Place the terminals on the device. Make sure the terminals engage.

6.3.3 Contact piece replacement (size S6)

The contact pieces can be replaced in the case of size S6 contactors. When replacing for the third time, the arc chamber must be replaced at the same time.

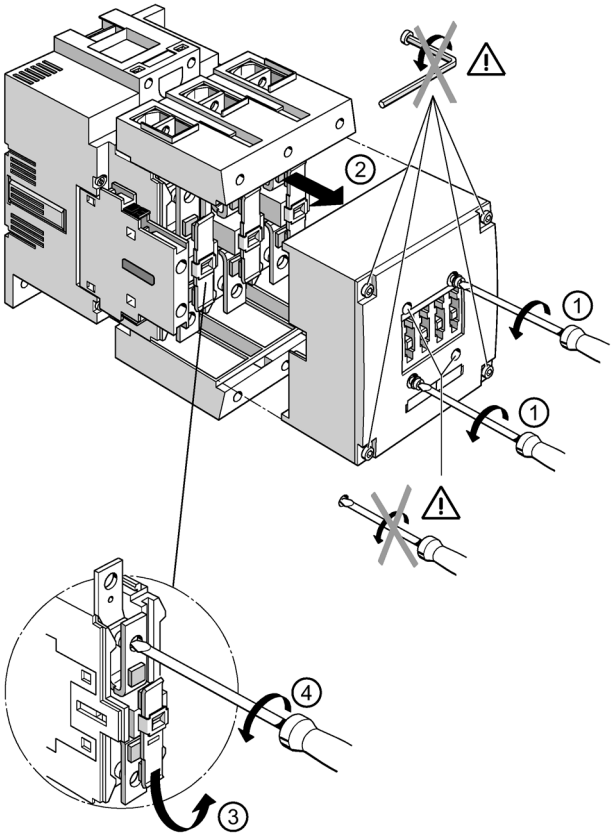

①/② Undo the two screws (POZIDRIV2) on the front plate of the contactor and remove the arc chamber.

③ Remove the contact piece by slightly tilting it and pulling it out with a swivel movement.

④ Undo the two screws that fix the non-movable contacts.

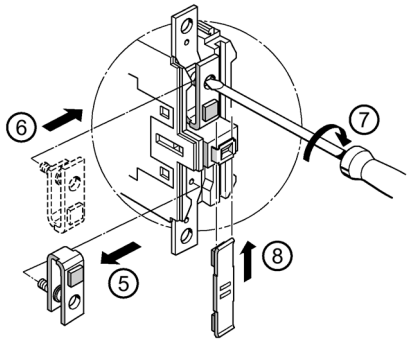

⑤ Remove the old contact pieces.
⑥ Insert the new contact pieces.
⑦ Screw the new contact pieces tight.
⑧ Slide in a new movable contact piece.

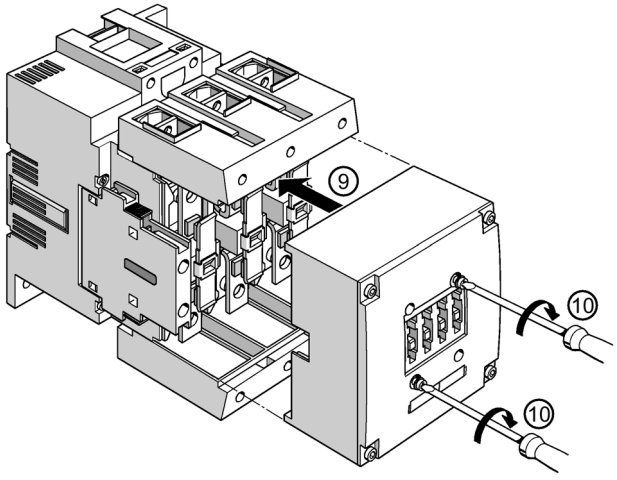

⑨ Re-attach the arc chambers.
⑩ Tighten the two screws on the front plate again.

6.3.4 Contact piece replacement (size S10 and S12)

The contact pieces can be replaced in the case of size S10 and S12 contactors. When replacing for the third time, the arc chamber must be replaced at the same time.

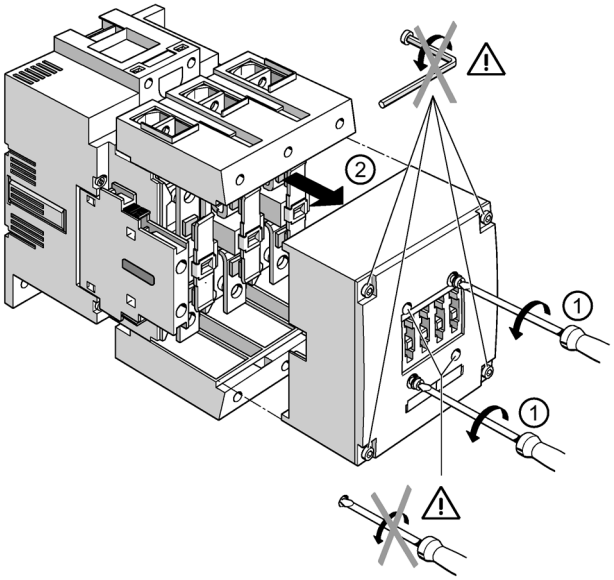

①/② Undo the two screws (hexagon socket-head screws SW4) on the front plate of the contactor and remove the arc chamber.

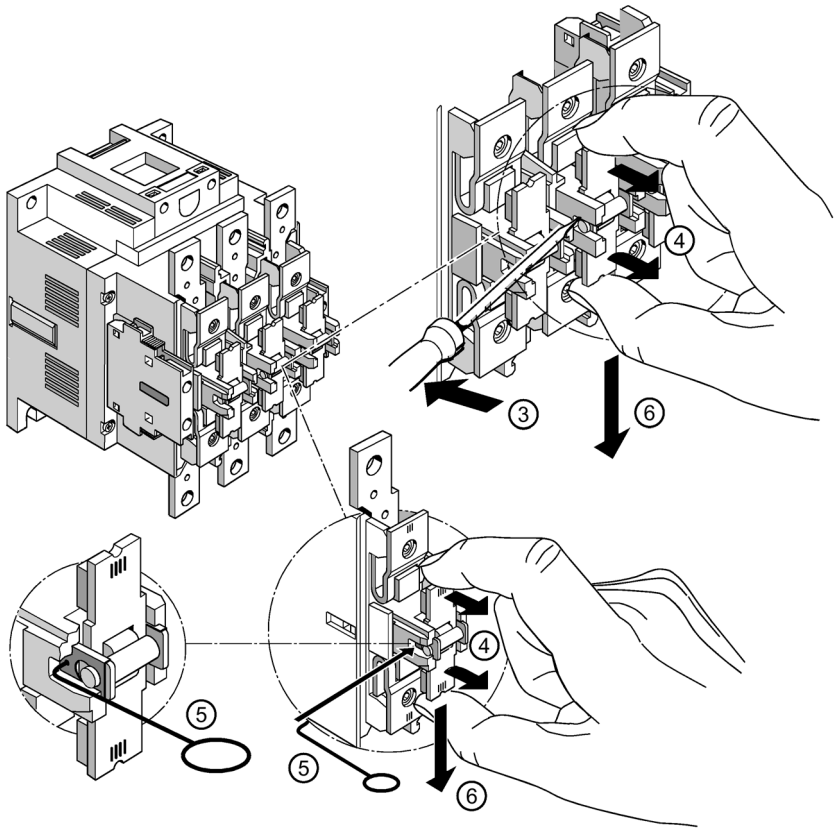

③ Remove the movable contact and proceed as follows in doing so: Use a screwdriver to lift up the contact piece slightly.

④ Pull the contact piece slightly forward with two fingers.

⑤ To prevent the sprung terminal clamp from slipping back, insert the accompanying hook into the opening on the side of the contact piece holder that is accessed by removing the contact piece.

⑥ Remove the contact piece from the bottom.

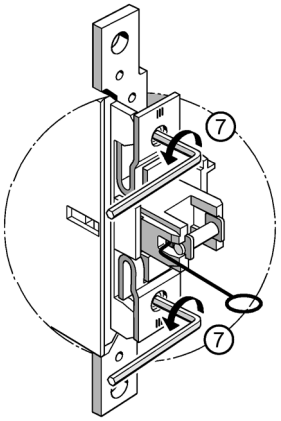

⑦ Undo the two screws that fix the non-movable contacts.

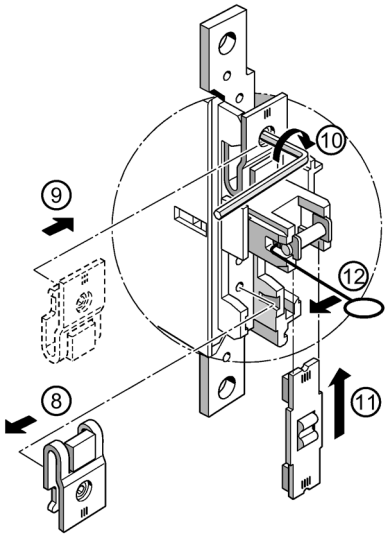

⑧ Remove the old contact pieces.
⑨ Insert the new contact pieces.
⑩ Screw the new contact pieces tight.
⑪ Slide in a new movable contact piece.
⑫ Pull the locking hook out.

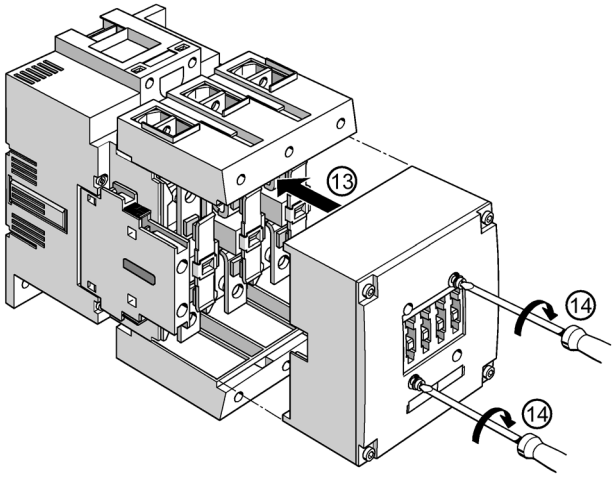

⑬ Re-attach the arc chambers.
⑭ Tighten the two screws on the front plate again.

6.4 Replacing the vacuum interrupters (sizes S10 and S12)

The vacuum interrupters can be replaced on the 3RT12 vacuum contactors.

The three switch position indicators on the front side of the contactors serve at the same time to indicate contact erosion / wear for each of the three vacuum interrupters. When the limit mark of an interrupter is undershot (indicator line is at the level of the tool symbol), all three vacuum interrupters must be replaced.

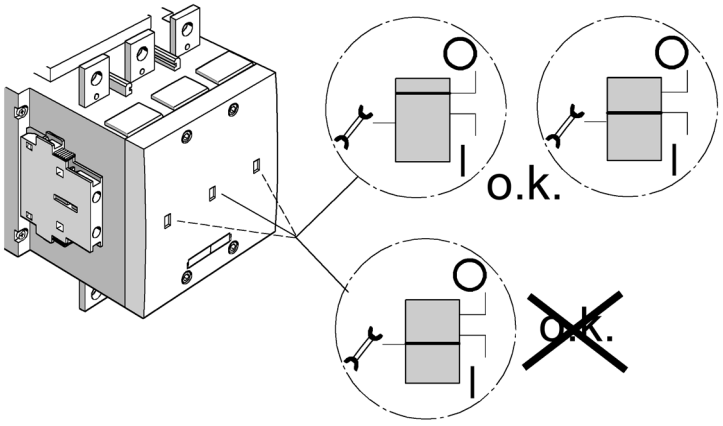

Figure 6-4 Contact erosion indicator and switch position indicator

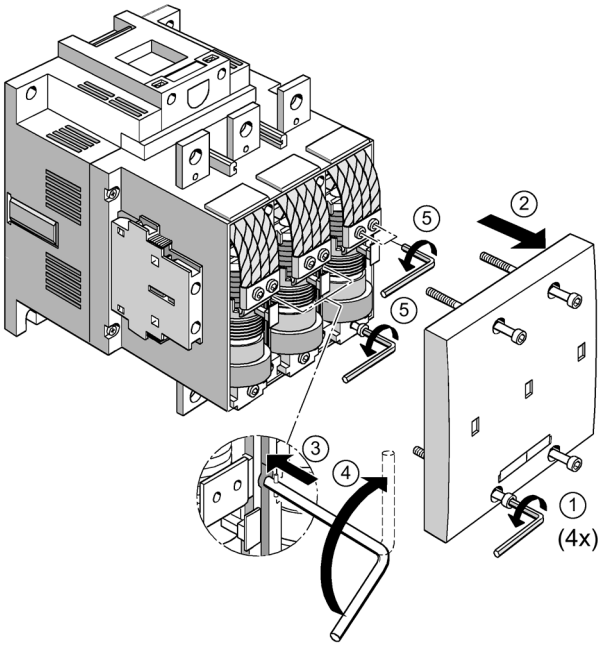

① Undo the four screws (hexagon socket-head screws SW4) on the front plate of the contactor.
② Remove the top part of the contactor enclosure.
③ Insert both of the releasing levers provided into the gaps between each 2 vacuum interrupters (a rounding cut in the adjacent side walls serves as an orientation guide).
④ Turn the lever upwards.
⑤ Loosen the Allen screws (two per vacuum interrupter) from the cables that are connected to the vacuum interrupters.

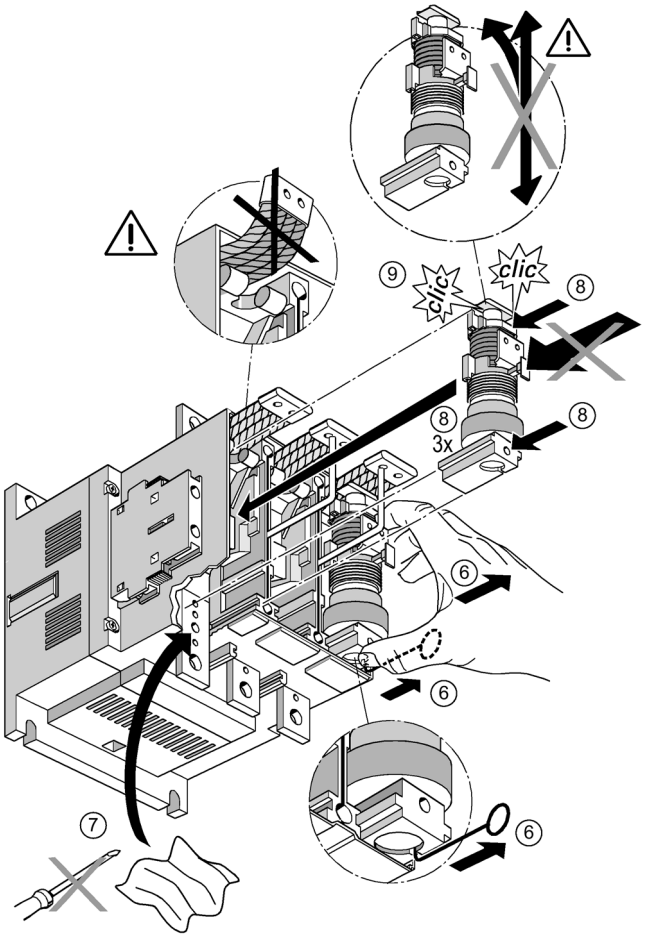

⑥ Grip the vacuum interrupters firmly at the top and bottom and pull them out slightly. Insert the enclosed hook into the opening on the underside of the interrupter so that you can fully remove it.
Do not bend the flexible cable bands of the interrupters upwards.

⑦ Do not clean the contact pieces on the contactor with a sharp object, otherwise the smooth surface can be damaged.

⑧ Slide in the new vacuum interrupters until you hear a definitive click.

⑨ Do not bend the interrupters since this could destroy them.

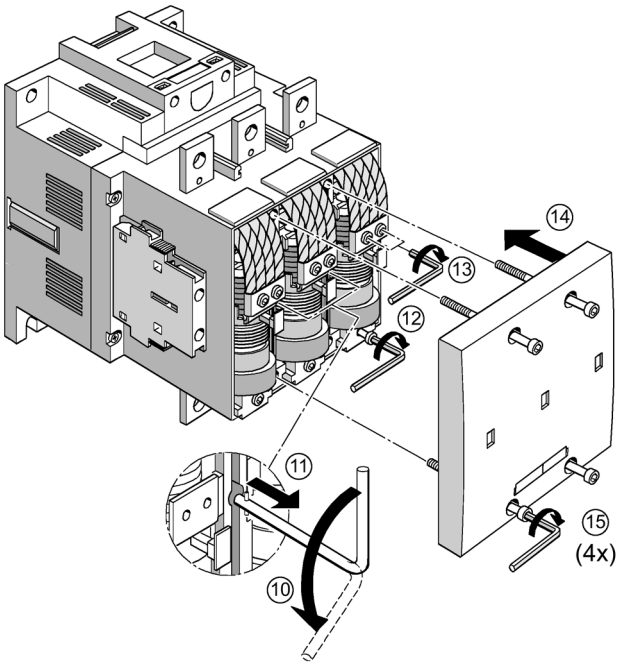

⑩ Turn the two release levers back.
⑪ Remove the two release levers.
⑫ Screw the cable bands tight to the interrupters with the Allen key.
Tightening torque: 7.5 ... 8.5 Nm
⑬ Screw the cable bands tight to the interrupters with the Allen key.
Tightening torque: 4.4 ... 5.2 Nm
⑭ Attach the enclosure top part.
⑮ Tighten the 4 hexagon socket-head screws on the front plate.

Connection

7

Connection systems

The SIRIUS contactors are available with the following connection types:

- Screw-type connection system
- Spring-loaded connection system

  In size S2 to S12, the spring-loaded connection system is used only in the control circuit.
- Ring cable lug connection system

  The ring cable lug connection system is not used in sizes S2 to S12.
- Solder pin connection (only possible for size S00, in conjunction with a solder pin adapter)

Terminal designations

Terminal	Designation
A1	Coil terminal +
A2	Coil terminal -
L1, L2, L3	Contactor's main circuit terminal to the power network
T1, T2, T3	Contactor's main circuit terminal to the load/motor connection
13, 14	Auxiliary contact, closing
21, 22	Auxiliary contact, opening

The auxiliary/control contacts have a two-digit designation:

- First digit: Consecutive number of the auxiliary contacts (sequence number).
- Second digit: Task of the respective auxiliary contact (function number).
  E. g. 1-2 for NC contacts or 3-4 for NO contacts

Terminal designations of the auxiliary contacts

The terminal designations as per EN 50012 apply to size S00 contactors with an integrated auxiliary (NO) contact. Auxiliary contacts are fitted and arranged on size S0 contactors (integrated in the basic device) in accordance with the terminal designations contained in DIN EN 50012.

Additionally, for sizes S00 and S0, complete devices with permanently mounted auxiliary switch blocks (2 NO contacts + 2 NC contacts in accordance with DIN EN 50012) are available.

Coil terminals

Size S00 to S3 contactors feature a coil terminal on the front. An adapter (3RT2926-4R./. coil terminal module) can be used to move the coil terminal up or down on size S0 / S2 / S3 contactors (compatible with 3RT102 / 3RT103).

Reference

More information ...	Can be found in the chapter ...
About the coil terminal module and how to mount it on a 3RT20 contactor (size S0)	Coil terminal module (Page 310)

Screw connection

The devices with screw connections have the following features:

- All connections are equipped with captive screws
- All connection points are supplied open
- Screwdriver guides enable the use of machine screwdrivers
- On size S00, all connecting screws for main and auxiliary circuits have a uniform screw size (POZIDRIV cross-tip screw size 2) and thus require the same tightening torque.
- On all sizes (S00 to S12), the connecting screws for the auxiliary conductor connections are identical (POZIDRIV size 2, no bit replacement, uniform tightening torque)

Spring-loaded connection

Devices with spring-loaded connection system have the following properties:

- The contactors are recommended when powerful shaking or vibration is to be expected at the location of use.
- The terminals are suitable for 2-conductor connection.
- All connections can be accessed from the front and are clearly arranged.
- A maximum of 2 conductors with a cross-section of 0.25 mm^2 to max. 2.5 mm^2 can be used at each connection point.

Solder pin connection

For applications where the contactors are to be soldered onto a PCB directly, a solder pin adapter is available for SIRIUS size S00 contactors up to 5.5 kW or 12 A.

Devices with a solder pin connection have the following properties:

- The terminals are suitable for a 1-conductor connection.
- All connections can be accessed from the front and are clearly arranged.
- A maximum of 2 conductors with a cross-section of 0.25 mm^2 to max. 2.5 mm^2 can be used at each connection point.

Reference

More information ...	Can be found in the chapter ...
About the solder pin adapter and how to mount it on a motor/contactor relay (size S00)	Solder pin adapter (Page 307)

2-conductor connection

2 conductor ends can be connected to every main, auxiliary, and control circuit connection. These connections are also suitable for untreated conductors, which may have varying cross-sections. This connection system offers numerous benefits, including laying the foundations for problem-free looping through and parallel connection without intermediate terminals.

7.1 Conductor cross-sections

7.1.1 Conductor cross-sections for screw-type connection systems

Conductor cross-sections for screw-type connection systems

The tables below define the permissible conductor cross-sections for main terminals and auxiliary conductor connections in sizes S00 ... S3 for screw-type connection systems.

Table 7- 1 Main conductors of size S00 with M3 combination screws

		Contactors
Tool		Pozidriv size PZ 2, Ø 5 … 6 mm
Tightening torque		0.8 - 1.2 Nm
Solid and stranded	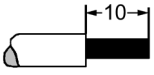	2 x (0.5 ... 1.5) mm²
		2 x (0.75 ... 2.5) mm²
		Max. 2 x 4 mm²
Finely stranded with end sleeve	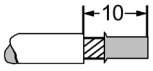	2 x (0.5 ... 1.5) mm²
		2 x (0.75 ... 2.5) mm²
AWG		2 x (20 … 16)
		2 x (18 … 14)
		2 x 12

1) Only 1 conductor can be clamped on the stand-alone assembly support.

Table 7- 2 Main conductors of size S0 with M4 combination screws

		Contactors
Tool		Pozidriv size PZ 2, Ø 5 … 6 mm
Tightening torque		2.0 ... 2.5 Nm
Solid and stranded	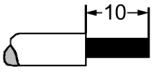	2 x (1.0 ... 2.5) mm²
		2 x (2.5 ... 10) mm²
Finely stranded with end sleeve	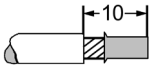	2 x (1 ... 2.5) mm²
		2 x (2.5 ... 6) mm²
		Max. 1 x 10 mm²
AWG		2 x (16 ... 12)
		2 x (14 ... 8)

1) Only 1 conductor can be clamped on the stand-alone assembly support.

Table 7- 3 Main conductors of size S2 with M6 box terminal

		Contactors
Tool		Pozidriv size PZ 2, ∅ 5 ... 6 mm
Tightening torque		3.0 ... 4.5 Nm (27 ... 40 lb in)
Solid and stranded	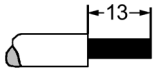	2 x (1.0 ... 35) mm² 1 x (1.0 ... 50) mm²
Finely stranded	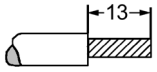	---
Finely stranded with end sleeve	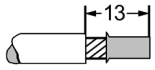	2 x (1.0 ... 25) mm² 1 x (1.0 ... 35) mm²
AWG		2 x (18 ... 2) 1 x (18 ... 1)

Table 7- 4 Main conductors of size S3 with box terminal block

		Contactors
Tool	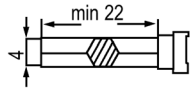	4 mm Allen key
Tightening torque		4.5 ... 6.0 Nm
Solid	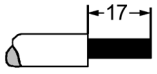	2 x (2.5 ... 16) mm²
Stranded	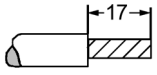	2 x (6 ... 16) mm² 2 x (10 ... 50) mm²[1)] 1 x (10 ... 70) mm²
Finely stranded without end sleeve	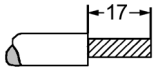	–
Finely stranded with end sleeve	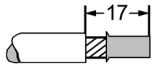	2 x (2.5 ... 35) mm² 1 x (2.5 ... 50) mm²
Ribbon cables		2 x (6 x 9 x 0.8)
AWG		2 x (10 to 1/0) 1 x (10 to 2/0)

[1)] Also, a solid conductor with 2.5 mm² can be clamped

Table 7- 5 Main conductors of size S6 with box terminal block

		Contactor with 3RT1955-4G box terminal block		
Tool		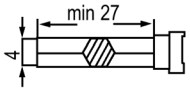 4 mm Allen key		
Tightening torque		1.0 ... 12.0 Nm		
				
Solid	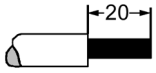	1 x (16 ... 70) mm²	1 x (16 ... 70) mm²	max. 50 + 70 mm²
Finely stranded with end sleeve	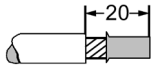	1 x (16 ... 70) mm²	1 x (16 ... 70) mm²	max. 50 + 70 mm²
Ribbon cables		min. 3 x 9 x 0.8 max. 6 x 15.5 x 0.8		
AWG		1 x (AWG 6 to 2/0)	1 x (AWG 6 to 2/0)	max. AWG 1/0 + 1/0

Table 7- 6 Main conductors of size S6 with box terminal block

		Contactor with 3RT1956-4G box terminal block		
Tool		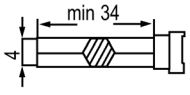 4 mm Allen key		
Tightening torque		1.0 ... 12.0 Nm		
				
Solid	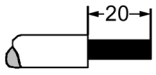	1 x (16 ... 120) mm²	1 x (16 ... 120) mm²	max. 95 + 120 mm²
Finely stranded with end sleeve	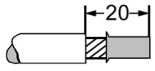	1 x (16 ... 120) mm²	1 x (16 ... 120) mm²	max. 95 + 120 mm²
Ribbon cables		min. 3 x 9 x 0.8 max. 10 x 15.5 x 0.8		
AWG		1 x (AWG 6 to 250 kcmil)	1 x (AWG 6 to 250 kcmil)	max. AWG 3/0 + 3/0

Table 7- 7 Main conductors of size S10 / S12 with box terminal block

		Contactor with 3RT1966-4G box terminal block		
Tool		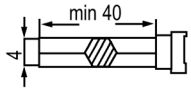 5 mm Allen key		
Tightening torque		20.0 ... 22.0 Nm		
				
Solid	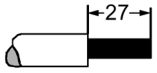	1 x (95 ... 300) mm²	1 x (120 ... 240) mm²	min. 70 + 70 mm² max. 240 + 240 mm²
Finely stranded with end sleeve	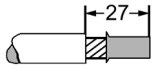	1 x (70 ... 240) mm²	1 x (120 ... 185) mm²	min. 50 + 50 mm² max. 185 + 185 mm²
Ribbon cables		min. 6 x 9 x 0.8 max. 20 x 24 x 0.5 11 x 21 x 1		
AWG		1 x (AWG 3/0 to 600 kcmil)	1 x (AWG 250 to 500 kcmil)	max. AWG 2/0 + 2/0 max AWG 500 + 500

Table 7- 8 Auxiliary conductors of sizes S00 / S0 / S2 / S3 with M3 combination screws

		Accessories for contactors	**Contactors, size S00**	**Contactors Sizes S0 / S2 / S3**
Tool		Pozidriv size PZ 2, Ø 5 … 6 mm		
Tightening torque		0.8 - 1.2 Nm		
Solid and stranded	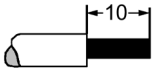	2 x (0.5 ... 1.5) mm²	2 x (0.5 ... 1.5) mm²	2 x (0.5 ... 1.5) mm²
		2 x (0.75 ... 2.5) mm²	2 x (0.75 ... 2.5) mm²	2 x (0.75 ... 2.5) mm²
			Max. 2 x 4 mm²	
Finely stranded with end sleeve	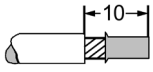	2 x (0.5 ... 1.5) mm²	2 x (0.5 ... 1.5) mm²	2 x (0.5 ... 1.5) mm²
		2 x (0.75 ... 2.5) mm²	2 x (0.75 ... 2.5) mm²	2 x (0.75 ... 2.5) mm²
AWG		2 x (20 … 16)	2 x (20 … 16)	2 x (20 … 16)
		2 x (18 … 14)	2 x (18 … 14)	2 x (18 … 14)
			2 x 12	

Table 7- 9 S00 and S0 capacitor contactors

			Contactors, size S00	Contactors, size S0	
		A1/A2, NO/NC	L1, L2, L3 3RT261.-1	L1, L2, L3 3RT262.-1	3RT262.-1 + 3RV2925-5AB
Tool		Pozidriv size PZ 2, Ø 5 … 6 mm	Pozidriv size PZ 2, Ø 5 … 6 mm	Pozidriv size PZ 2, Ø 5 … 6 mm	Pozidriv size PZ 2, Ø 5 … 6 mm
Tightening torque		0.8 ... 1.2 Nm (7 to 10.3 lb·in)	0.8 ... 1.2 Nm (7 to 10.3 lb·in)	2 … 2.5 Nm (18 to 22 lb·in)	3 ... 4 Nm (27 to 35.2 lb in)
Solid and stranded	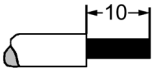	2 x (0.5 ... 1.5) mm² 2 x (0.75 ... 2.5) mm² 2 x 4 mm²	2 x (0.5 ... 1.5) mm² 2 x (0.75 ... 2.5) mm² 2 x 4 mm²	2 x (1 ... 2.5) mm² 2 x (2.5 ... 10) mm²	1 x (2.5 ... 25) mm²
Finely stranded with end sleeve	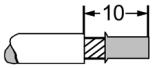	2 x (0.5 ... 1.5) mm² 2 x (0.75 ... 2.5) mm²	2 x (0.5 ... 1.5) mm² 2 x (0.75 ... 2.5) mm²	2 x (1 ... 2.5) mm² 2 x (2.5 ... 6) mm² 1 x 10 mm²	1 x (2.5 ... 16) mm²
AWG		2 x (20 … 16) 2 x (18 … 14) 2 x 12	2 x (20 … 16) 2 x (18 … 14) 2 x 12	2 x (14 to 8)	1 x (10 to 4)

Table 7- 10 Capacitor contactors main conductors of size S2 (3RT263.-1)

		L1, L2, L3 3RT263.-1
Tool		Pozidriv size PZ 2, Ø 5 … 6 mm
Tightening torque		3.0 ... 4.5 Nm (27 to 40 lb in)
Solid and stranded	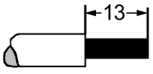	2 x (1 to 35) mm² 1 x (1 to 50) mm²
Finely stranded with end sleeve	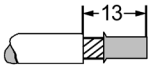	2 x (1 to 25) mm² 1 x (1 to 35) mm²
AWG		2 x (18 to 2) 1 x (18 to 0)

Table 7- 11 Capacitor contactors auxiliary conductors of size S2 (3RT263.-1)

		A1/A2, NO/NC **3RT263.-1** **3RH29.1-1**
Tool		Pozidriv size PZ 2, Ø 5 … 6 mm
Tightening torque		M3: 0.8 ... 1.2 Nm (7 to 10.3 lb in)
Solid and stranded	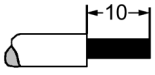	2 x (0.5 ... 1.5)
		2 x (0.75 ... 2.5)
		2 x 4
Finely stranded with end sleeve	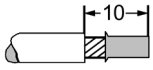	2 x (0.5 ... 1.5)
		2 x (0.75 ... 2.5)
AWG		2 x (20 to 16)
		2 x (18 to 14)
		2 x 12

Table 7- 12 Capacitor contactors S2 (3RT263.-1 + 3RV2935-5A)

		3RT263.-1 **+** **3RV2935-5A**
Tightening torque		4 ... 6 Nm (35 to 53 lb in)
Solid and stranded	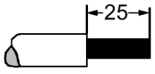	2 x (2.5 to 50) mm^2
		1 x (2.5 to 70) mm^2
Finely stranded with end sleeve	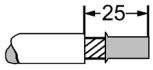	2 x (2.5 to 35) mm^2
		1 x (2.5 to 50) mm^2
AWG		2 x (10 to 1 / 0)
		1 x (10 to 2 / 0)

Table 7- 13 Capacitor contactors S2 (3RT2637)

		L1, L2, L3 **3RT2637**	
I_{eff}		≤ 133 A	> 133 A
Finely stranded	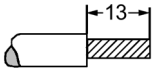	1 x 50 mm^2	2 x 35 mm^2
AWG		1 x 0	2 x 2
Rated fuse current		Max. 200 A	Max. 160 A

7.1.2 Conductor cross-sections for spring-loaded connection systems

Conductor cross-sections for spring-loaded connection systems

The tables below define the permissible conductor cross-sections for main terminals and auxiliary conductor connections in sizes S00, S0 and S2 for spring-loaded connection systems. In size S2, the spring-loaded connection system is used only in the control circuit.

Table 7- 14 Main conductors of size S00

		Contactors
Tool		Ø 3.0 x 0.5 (3RA2908-1A)
Solid and stranded	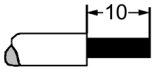	2 x (0.5 to 4.0) mm²
Finely stranded without end sleeve	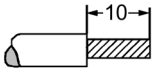	2 x (0.5 to 2.5) mm²
Finely stranded with end sleeve	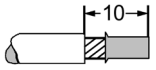	2 x (0.5 to 2.5) mm²
AWG		2 x (20 to 12)

Table 7- 15 Main conductors of size S0

		Contactors
Tool		Ø 3.0 x 0.5 (3RA2908-1A)
Solid and stranded	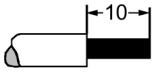	2 x (1.0 to 10) mm²
Finely stranded without end sleeve	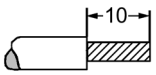	2 x (1.0 to 6.0) mm²
Finely stranded with end sleeve	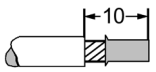	2 x (1.0 to 6.0) mm²
AWG		2 x (18 to 8)

Table 7- 16 Auxiliary conductors of sizes S00 / S0 / S2 / S3

		Contactors, size S00	**Contactors, sizes S0 / S2 / S3, accessories for contactors**
Tool		Ø 3.0 x 0.5 (3RA2908-1A)	
Solid and stranded	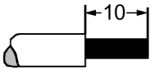	2 x (0.5 to 4) mm²	2 x (0.5 to 2.5) mm²
Finely stranded without end sleeve	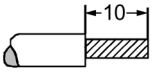	2 x (0.5 to 2.5) mm²	2 x (0.5 to 2.5) mm²
Finely stranded with end sleeve	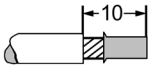	2 x (0.5 to 2.5) mm²	2 x (0.5 ... 1.5) mm²
AWG		2 x (20 to 12)	2 x (20 to 14)

Table 7- 17 Auxiliary conductors for front and laterally mounted auxiliary switches

		3RH29 auxiliary switch blocks
Tool		Ø 3.0 x 0.5 (3RA2908-1A)
Solid and stranded	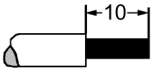	2 x (0.5 to 2.5) mm²
Finely stranded without end sleeve	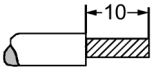	2 x (0.5 to 2.5) mm²
Finely stranded with end sleeve	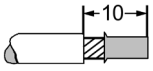	2 x (0.5 ... 1.5) mm²
AWG		2 x (20 to 14)

7.1.3 Conductor cross-sections for ring cable lug connection system

Conductor cross-sections for ring cable lug connection system

The tables below define the permissible conductor cross-sections for main terminals and auxiliary conductor connections in sizes S00 and S0 for ring cable lug connection systems.

Table 7- 18 Main conductors and auxiliary conductors of size S00 with M3 combination screws

		SIRIUS devices
Tool		Pozidriv size 2, Ø 5 to 6 mm
Tightening torque		0.8 to 1.2 Nm
Ring cable lug [1)]	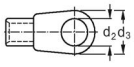	d_2 = min. 3.2 mm d_3 = max. 7.5 mm

Table 7- 19 Main conductors and auxiliary conductors of size S0 with M4 combination screws

		SIRIUS devices
Tool	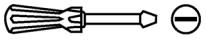	Pozidriv size 2, Ø 5 to 6 mm
Tightening torque		2.0 to 2.5 Nm
Ring cable lug [1)]	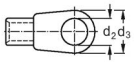	d_2 = min. 4.3 mm d_3 = max. 12.2 mm

Table 7- 20 Main conductors of size S3 with M6 screws

		SIRIUS devices
Tool	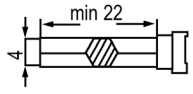	4 mm Allen key
Tightening torque		4.5 ... 6.0 Nm
Busbars (M6 x 25)		2 x 12 x 4
Ring cable lug[1)]	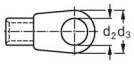	d_2 = min. 6.3 mm d_3 = max. 19.0 mm
Ring cable lug cover	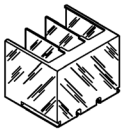	3RT1946-4EA1

[1] The following ring cable lugs are approved for achieving the required clearances and creepage distances:

- For applications according to IEC 60947-1:
  - DIN 46237 (with insulating sleeve)
  - JIS CS805 type RAV (with insulating sleeve)
  - JIS CS805 type RAP (with insulating sleeve)
- For applications according to UL 508:
  - DIN 46 234 (without insulating sleeve)
  - DIN 46225 (without insulating sleeve)
  - JIS CS805 (without insulating sleeve)

A shrink-on sleeve must be used to insulate ring cable lugs without an insulating sleeve. The following conditions must be met:

- Operating temperature: -55 °C to +155 °C
- UL 224 approved
- Flame-protected



⚠ DANGER

Hazardous voltage.

Will cause death or serious injury.

Only use approved ring cable lugs to meet the required clearances and creepage distances.

Table 7- 21 Main conductors of size S6 with M8 screws

Contactor with busbar connection		
Connecting bars (M8 x 25)		2 x 15 x 4 mm M8 x 25
Tightening torque		10.0 ... 14.0 Nm
Finely stranded with cable lug		2 x (25 ... 120) mm² [1] 2 x (AWG 4 to 250 kcmil)
Stranded with cable lug		2 x (16 ... 95) mm² [1] 2 x AWG 6 to 3/0
AWG		4 ... 250 kcmil

[1] When connecting cable lugs according to DIN 46235 with conductor cross-sections of 95 mm^2 and more, the 3RT1956-4EA1 terminal cover must be used to ensure phase clearance.

Table 7- 22 Main conductors of size S10 / S12 with M10 screws

Contactor with busbar connection		
Connecting bars (M10 x 30)		2 x 25 x (..) mm M10 x 30
Tightening torque		14.0 ... 24.0 Nm
Finely stranded with cable lug		2 x (70 ... 240) mm² [1] 2 x (AWG 2/0 to 500 kcmil)
Stranded with cable lug		22 x (50 ... 240) mm² [1] 2 x AWG 1/0 to 500 kcmil

[1] When connecting cable lugs in accordance with DIN 46234 for conductor cross-sections from 240 mm^2, as well as DIN 46235 for cable cross-sections from 185 mm^2, use the 3RT1966-4EA1 terminal cover to ensure phase spacing.

Accessories

8

8.1 Overview of accessories for 3RT2 contactors

8.1.1 Overview of accessories for 3RT2 contactors

SIRIUS contactors with a width of 45 mm (size S00/S0), 55 mm (size S2), and 70 mm (size S3) come with a uniform, versatile range of auxiliary switches and accessories, which are quick to retrofit and replace. The accessories for contactor relays and power contactors are identical in design. The accessories can be attached on the front or the sides of devices.

The 3RH2 contactor relays can be expanded to give versions with a maximum of 8 poles by attaching 2-pole or 4-pole auxiliary switch blocks.

Table 8- 1 Overview - Accessories (for sizes S00 and S0) for 3RT2 power contactors and 3RH2 contactor relays

Accessories	3RH2 contactor relay (size S00)	3RT2 power contactor (size S00)	3RT2 power contactor (size S0)
Auxiliary switch blocks on the front/lateral	✓ / ✓	✓ / ✓	✓ / ✓
Surge suppressor	✓	✓	✓
EMC interference suppression module	✓	✓	---
OFF-delay device	✓	✓	✓
Mechanical latch	---	---	✓
Additional load module	✓	✓	---
Control kit for manual operation of contactor contacts	✓	✓	✓
Coupling link for PLC	---	---	✓
LED display indicator module	✓	✓	✓
Solder pin adapter	✓	✓	---
Coil terminal module	---	---	✓
Cover for ring cable lug	✓	✓	✓
Sealable cover	✓	✓	✓
3-phase infeed terminal	---	✓	✓
Parallel switching connector	✓	✓	✓
Link module for two contactors in series	---	✓	✓
Link module for motor starter protector	---	✓	✓
Insulating stop	✓	✓	✓[1)]
Terminal module for contactors with screw connections	---	✓	✓
Pneumatically delayed auxiliary switch	---	---	✓
Function modules • Electronic timing relay with semiconductor output for controlling contactors • Solid-state time-delay auxiliary switches • Function module for star-delta (wye-delta) start	---	✓	✓
Function modules for connection to the controller (AS-Interface or IO-Link) for direct-on-line starting, reversing starting, star-delta (wye-delta) starting	---	✓	✓
Assembly kit for reversing contactor assembly	---	✓	✓
Assembly kit for contactor assembly for star-delta (wye-delta) start	---	✓	✓

1) The 3RT1916-4JA02 insulating stop can be used on the connection terminals for the auxiliary circuit of the 3RT2.2 and 3RT2.3 contactors.

Table 8- 2 Overview - Accessories (for sizes S2 and S3) for 3RT2 power contactors

Accessories	3RT2 power contactor (size S2)	3RT2 power contactor (size S3)
Auxiliary switch blocks on the front / side	✓ / ✓	✓ / ✓
Surge suppressors	✓	✓
OFF-delay devices	✓	✓
Control kit for manual operation of contactor contacts	✓	✓
Coupling link for PLC	✓	✓
LED display indicator module	✓	✓
Coil terminal module	✓	✓
Cover for ring cable lug	---	✓
Sealable cover	✓	✓
3-phase infeed terminal	✓	---
1-phase infeed terminal	---	✓
Parallel connector	✓	✓
Link module for two contactors in series	✓	---
Link module for circuit breaker/motor starter protector	✓	✓
Insulating stop	✓[1)]	---
Function modules • Electronic timing relay with semiconductor output for controlling contactors • Solid-state time-delay auxiliary switches • Function module for star-delta (wye-delta) start	✓	✓
Function modules for connection to the controller (AS-Interface or IO-Link) for direct starting, reversing starting, star-delta (wye-delta) starting	✓	✓
Assembly kit for reversing contactor assembly	✓	✓
Assembly kit for contactor assembly for star-delta (wye-delta) start	✓	✓

1) The 3RT1916-4JA02 insulating stop can be used on the connection terminals for the auxiliary circuit of the 3RT2.3 contactors.

Table 8- 3 Overview of snap-on modules for front mounting on 3RT2 contactors

Auxiliary switches			Snap-on modules for contactor control					
Normal	Time-delayed		Conventional control circuit wiring			Communication connection via ASi / IO-Link		
Electrical	Electrical	Pneumatic	Coupling link for direct starting	Snap-on timing relay Direct start-ing	Wye-delta	Direct-on-line start	Reversing start	Wye-delta
3RH29.1	3RA2813 3RA2814 3RA2815	3RT2926-2P	3RH2914-.GP11	3RA2811 3RA2812 3RA2831 3RA2832	3RA2816	3RA271.-.A	3RA271.-.B	3RA271.-.C

Size-specific accessories for 3RT2 contactors (size S00)

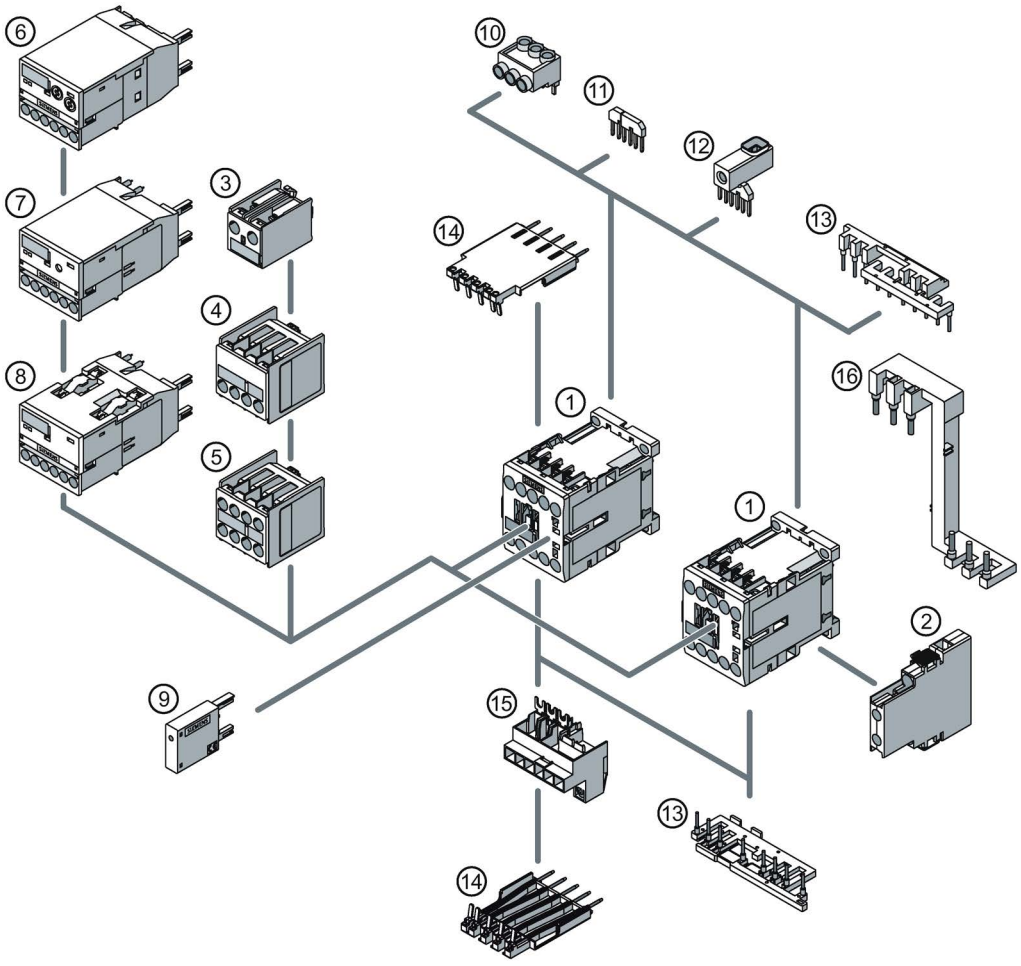

1 Contactor size S00
2 Laterally mountable auxiliary switch block (right or left), 2-pole
3 Auxiliary switch block for snapping onto the front, 1-pole (cable entry from above or below)
4 Auxiliary switch block for snapping onto the front, 2-pole (cable entry from above or below)
5 Auxiliary switch block for snapping onto the front, 4-pole
6 3RA28 function modules
7 Function module for AS-Interface, direct-on-line start
8 Function module for IO-Link, direct-on-line start
9 Surge suppressor
10 3-phase infeed terminal
11 Star jumper, 3-pole, without connection terminal
12 Parallel switching connector, 3-pole or 4-pole, with connection terminal
13 Wiring modules on the top and bottom, for connecting the main and control current paths
14 Solder pin adapter
15 Terminal module (adapter) for contactors with screw connections
16 Safety main circuit connectors for 2 contactors

Figure 8-1 Size-specific accessories for 3RT2 contactors (size S00)

Size-specific accessories for contactors (size S0)

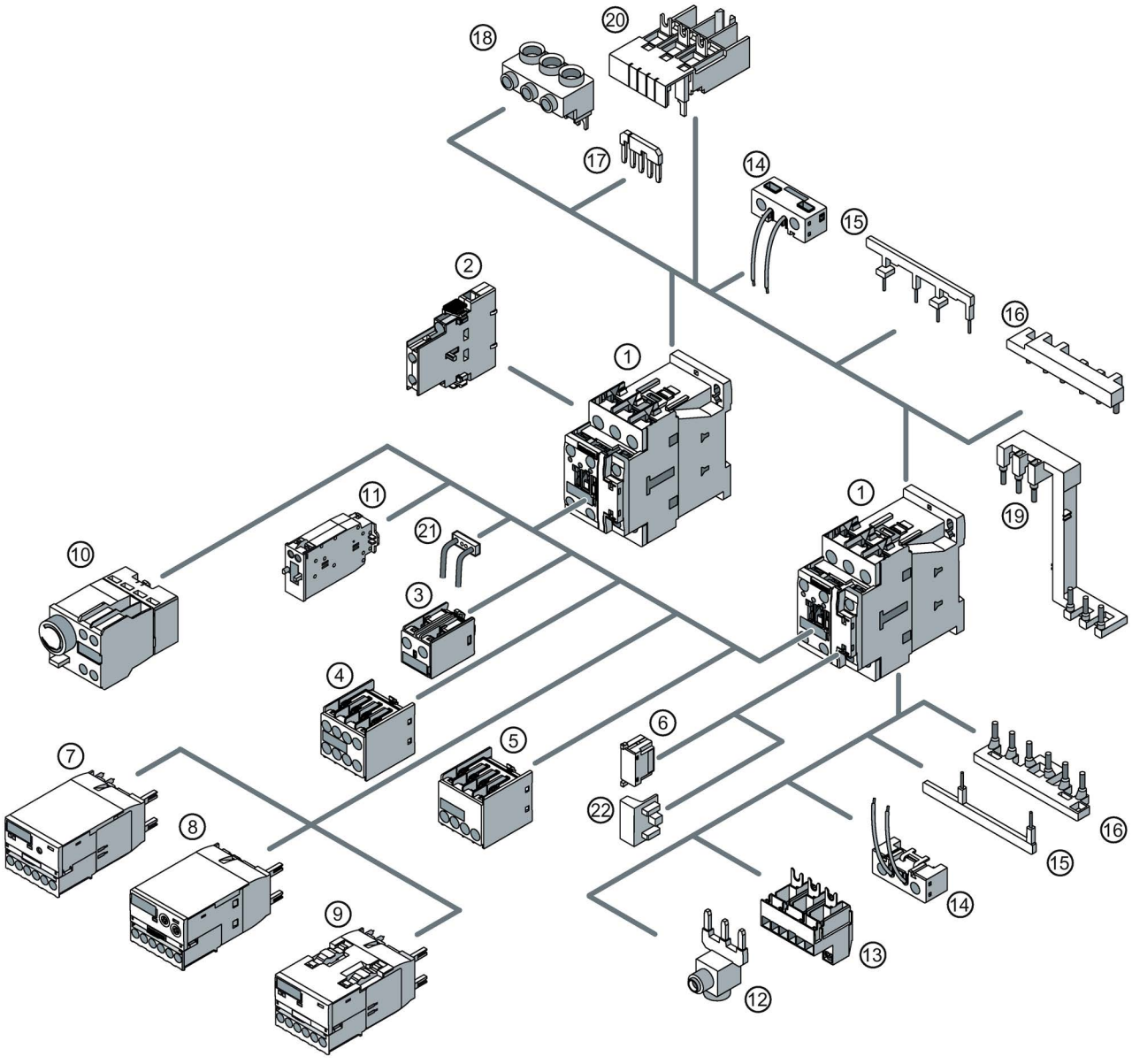

1 Contactor size S0
2 Laterally mountable auxiliary switch block (right or left), 2-pole
3 Auxiliary switch block for snapping onto the front, 1-pole (cable entry from above or below)
4 Auxiliary switch block for snapping onto the front, 4-pole
5 Auxiliary switch block for snapping onto the front, 2-pole (cable entry from above or below)
6 Surge suppressor
7 Function module for AS-Interface, direct-on-line start
8 3RA28 function modules
9 Function module for IO-Link, direct-on-line start
10 Pneumatic delay block
11 Mechanical latch

12 Parallel switching connector
13 Terminal module (adapter) for contactors with screw connections
14 Coil terminal module, top and bottom
15 Wiring modules, top and bottom, for connecting the control current paths
16 Wiring modules, top and bottom, for connecting the main current paths
17 Star jumper, 3-pole, without connection terminal
18 3-phase infeed terminal
19 Link module for two contactors in series (safety main circuit connectors for two contactors)
20 Link module for motor starter protector
21 LED display indicator module
22 Control kit for manual operation of contactor contacts

Figure 8-2 Size-specific accessories for 3RT2 contactors (size S0)

Contactor accessories (size S2)

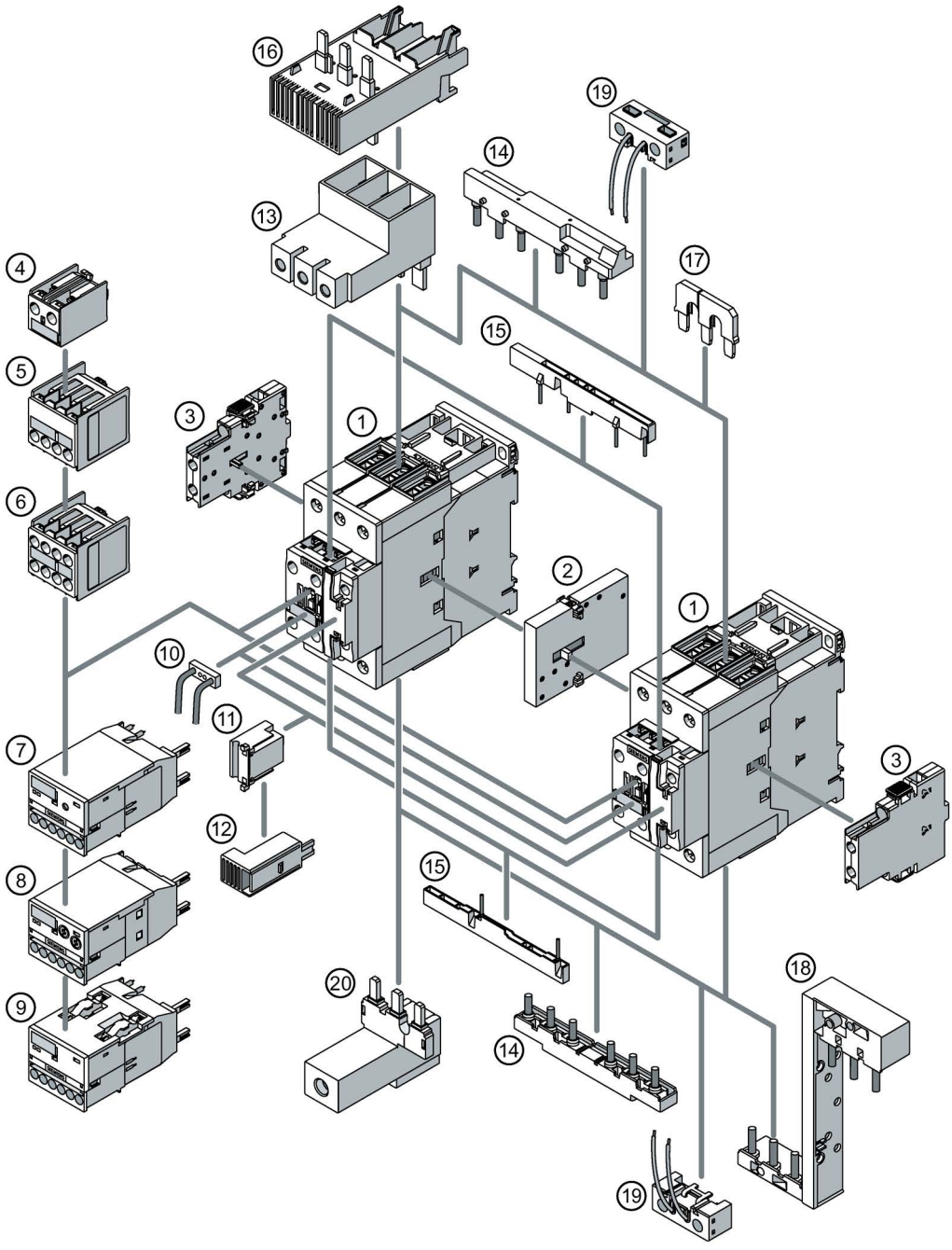

1 Contactor size S2
2 Mechanical interlock
3 Laterally mountable auxiliary switch block (right or left), 2-pole
4 Auxiliary switch block for snapping onto the front, 1-pole (cable entry from above or below)
5 Auxiliary switch block for snapping onto the front, 2-pole (cable entry from above or below)
6 Auxiliary switch block for snapping onto the front, 4-pole
7 Function module for AS-Interface, direct-on-line start

8 3RA28 function modules
9 Function module for IO-Link, direct-on-line start
10 LED display indicator module
11 Surge suppressor
12 Control kit for manual operation of contactor contacts
13 3-phase infeed terminal (type E)
14 Wiring modules, top and bottom, for connecting the main current paths
15 Wiring modules, top and bottom, for connecting the control current paths
16 Link module for motor starter protector
17 Star jumper, 3-pole, without connection terminal
18 Link module for two contactors in series (safety main circuit connectors for two contactors)
19 Coil terminal module, top and bottom
20 Parallel switching connector

Figure 8-3 Accessories for 3RT2 contactors (size S2)

Accessories for contactors (size S3)

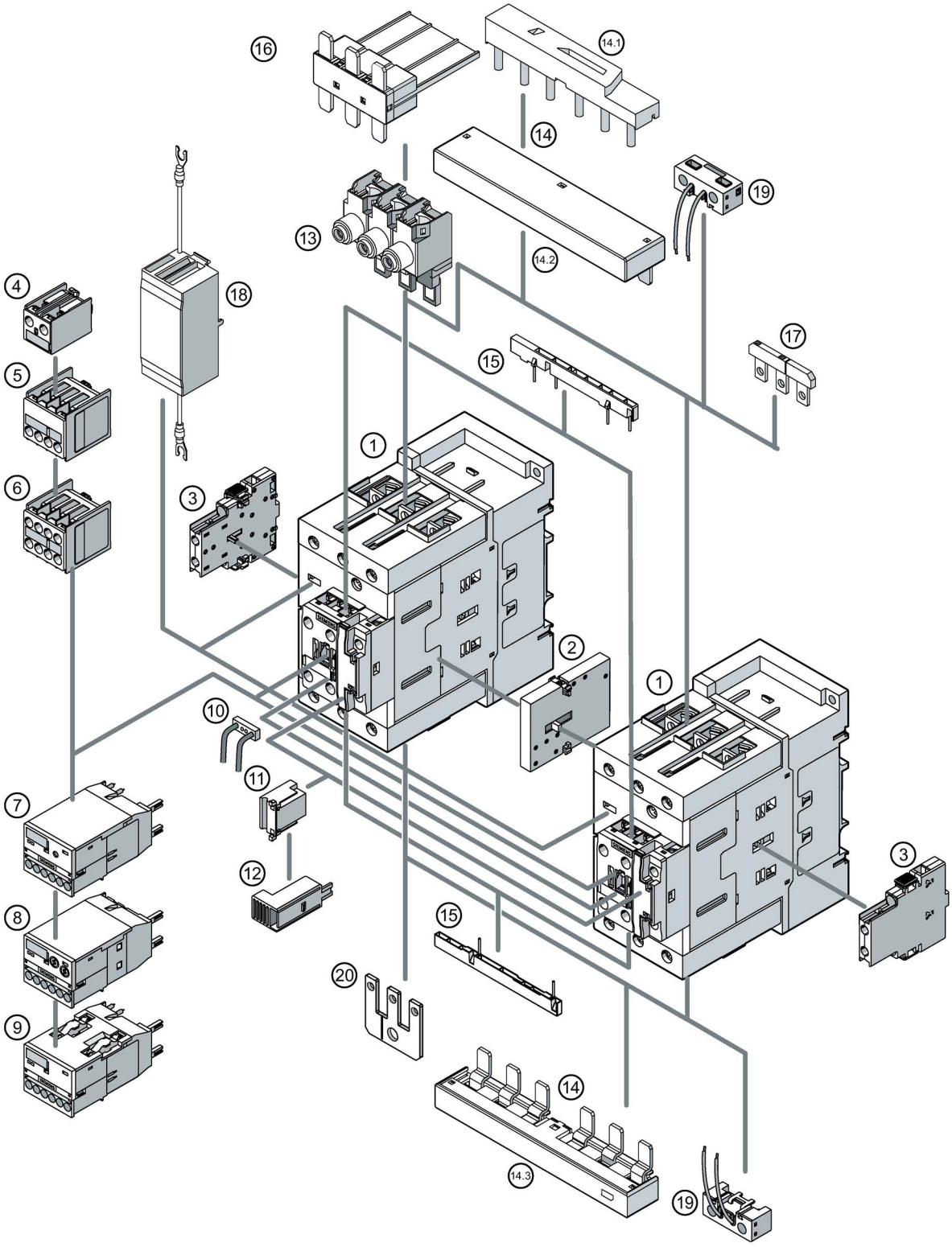

1 Contactor size S3
2 Mechanical interlock
3 Laterally mountable auxiliary switch block (right or left), 2-pole
4 Auxiliary switch block for snapping onto the front, 1-pole (cable entry from above or below)
5 Auxiliary switch block for snapping onto the front, 2-pole (cable entry from above or below)
6 Auxiliary switch block for snapping onto the front, 4-pole
7 Function module for AS-Interface, direct-on-line start
8 3RA28 function modules
9 Function module for IO-Link, direct-on-line start
10 LED display indicator module
11 Surge suppressor without / with LED (varistor)
12 Control kit for manual operation of contactor contacts
13 Three 1-phase infeed terminals
14 Wiring modules, top and bottom, for connecting the main current paths
14.1 Wiring modules on the top for connecting the main current paths (contactor assembly for star-delta (wye-delta) start)
14.2 Wiring modules on the top for connecting the main current paths (reversing contactor assembly)
14.3 Wiring modules on the bottom for connecting the main current paths (reversing contactor assembly and contactor assembly for star-delta (wye-delta) start)
15 Wiring modules, top and bottom, for connecting the control current paths (reversing contactor assembly and contactor assembly for star-delta (wye-delta) start)
16 Link module for motor starter protector
17 Star jumper, 3-pole, without connection terminal
18 Surge suppressor without LED (RC element)
19 Coil terminal module, top and bottom
20 Parallel switching connector

Figure 8-4 Accessories for 3RT2 contactors (size S3)

8.2 Overview of accessories for 3RT1 contactors

8.2.1 Overview of accessories for 3RT1 contactors

SIRIUS contactors sizes S6 to S12 come with a uniform, versatile range of auxiliary switches and accessories, which are quick to retrofit and replace. The accessories for contactor relays and power contactors are identical in design. The accessories can be attached on the front or the sides of devices.

The 3RH2 contactor relays can be expanded to give versions with a maximum of 8 poles by attaching 2-pole or 4-pole auxiliary switch blocks.

Table 8- 4 Overview - Accessories for 3RT1 power contactors

Accessories	3RT1 contactors	3RT12 vacuum contactors
Auxiliary switch blocks on the front/lateral	✓ / ✓	✓ / ✓
Surge suppressor without LED	✓	✓
Mechanical interlock	✓	✓
Wiring modules	✓	---
LED display indicator module	✓	---
Terminal covers	✓	✓
Sealable cover	✓	---
1-phase infeed terminal	✓	---
Parallel switching connector	✓	✓
Insulating stop	✓	---
Wiring kit for reversing contactor assembly	✓	---
Wiring kit for contactor assembly for star-delta (wye-delta) start	✓	---
Box terminal block	✓	---

Size-specific accessories for 3RT1 contactors (sizes S6 to S12)

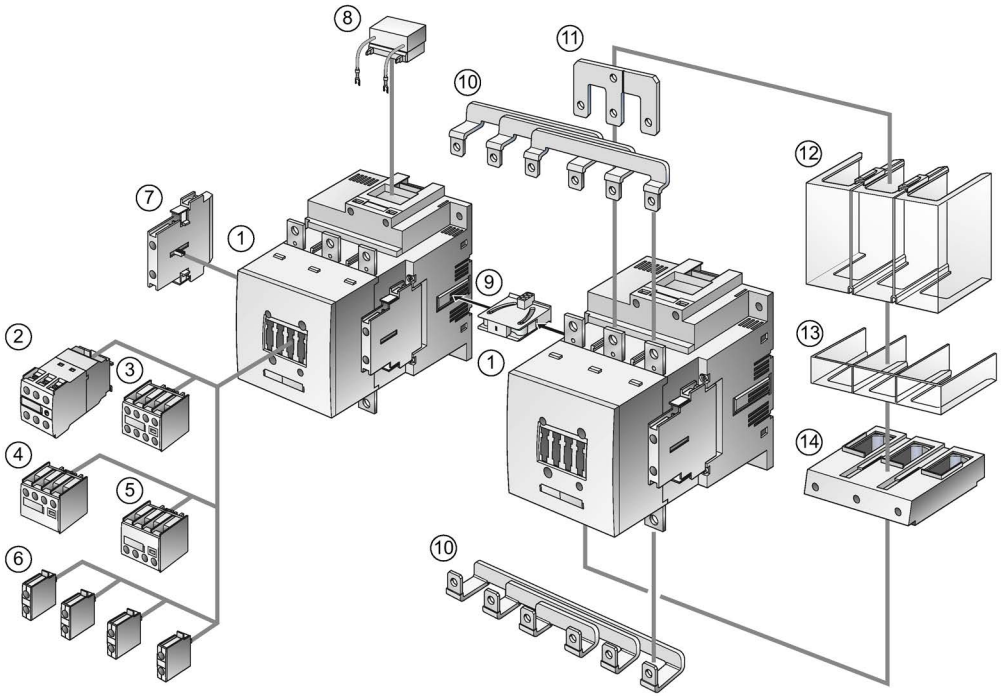

①	3RT10 and 3RT14 air-break contactor, sizes S6, S10 and S12
②	Auxiliary switch block, electronically delayed (ON-delay or OFF-delay or star-delta (wye-delta) function)
③	4-pole auxiliary switch block (terminal designations according to EN 50 012 or EN 50 005)
④	2-pole auxiliary switch block, cable entry from above
⑤	2-pole auxiliary switch block, cable entry from below
⑥	1-pole auxiliary switch block (max. 4 can be snapped on) (terminal designations according to EN 50 012 or EN 50 005)
⑦	2-pole auxiliary switch block, attachable on the right or left side (terminal designations according to EN 50 012 or EN 50 005)
⑧	Surge suppressor (RC element), can be attached at the top on the withdrawable coil
⑨	Mechanical interlock, laterally mountable
⑩	Wiring modules top and bottom (reversing duty)
⑪	Parallel connector (neutral bridge), 3-pole with through hole, different for sizes S6 and S10/S12
⑫	Connection cover for cable lug and bar connection, different for sizes S6 and S10/S12
⑬	Cover for box terminal, different for sizes S6 and S10/S12
⑭	Box terminal block, different for sizes S6 and S10/S12
② to ⑨	Same accessories for sizes S6 to S12
⑩ to ⑭	Different accessories depending on size

8.3 Auxiliary switch blocks

8.3.1 Auxiliary switch block for 3RT2 power contactors and 3RH2 contactor relays

8.3.1.1 Description

Function

The 3RH21 contactor relays and 3RT2 power contactors in size S00 feature an integrated auxiliary contact. The 3RT2 power contactors in sizes S0 to S3 have an integrated NO contact and an NC contact. Attachable auxiliary switch blocks can be used to add up to four further contacts to the auxiliary contacts already integrated in the basic devices.

Versions and designs

The auxiliary switch blocks for expanding the auxiliary contacts are available with screw-type, spring-loaded, and ring cable lug connections, in the following designs:

- On the front (uniform for sizes S00 to S3)
- Lateral (size-specific)

To facilitate wiring in the load feeder, 1-pole and 2-pole auxiliary switch blocks for mounting on the front are offered. Optionally, devices with connection from above or below are available. The 1-pole or 2-pole auxiliary switch blocks mounted on the front with connection option from below or above have fixed location identifiers. These auxiliary switch blocks are only supplied with screw connections. For spring-loaded connection, 4-pole auxiliary switch blocks are offered that are only fitted with auxiliary contacts 1 and 2.

The 3RT2 power contactors and the 3RH21 contactor relays can be expanded by means of auxiliary switch blocks mounted on the front or the side.

The table below depicts the auxiliary switch blocks for mounting on the front, which can be used across the board for contactors of sizes S00 to S3.

Table 8- 5 Auxiliary switch blocks for mounting on the front

Design of the auxiliary switch block	Connection system	Article number
1/2/3/4-pole auxiliary switch blocks; partial labeling	Screw-type/spring-loaded connection	3RH2911-.HA.. 3RH2911-.FA..
4-pole auxiliary switch blocks; full labeling	Screw-type/spring-loaded connection	3RH2911-.XA..-0MA0
4-pole auxiliary switch blocks for auxiliary contactors; full labeling	Screw-type/spring-loaded connection	3RH2911-.GA..[1)]
1/2-pole auxiliary switch blocks, cable entry from top or bottom, full labeling	Screw connection	3RH2911-1AA.. 3RH2911-1BA.. 3RH2911-1LA.. 3RH2911-1MA..
1/2-pole solid-state-compatible auxiliary switch blocks, partial labeling	Screw-type/spring-loaded connection	3RH2911-.NF..
2/4-pole auxiliary switch blocks (with make-before-break); partial labeling	Screw-type/spring-loaded connection	3RH2911-.FB.. 3RH2911-.FC..

1 Can only be used for 3RH21 contactor relays

The table below depicts the size-specific auxiliary switch blocks for lateral mounting.

Table 8- 6 Laterally mountable auxiliary switch blocks

Design of the auxiliary switch block	Connection system	Article number
2-pole auxiliary switch blocks; full labeling for motor contactors size S00	Screw-type/spring-loaded connection	3RH2911-.DA..
2-pole auxiliary switch blocks; full labeling	Screw-type/spring-loaded connection	3RH2921-.DA..
2-pole solid-state-compatible auxiliary switch blocks; full labeling for motor contactors size S00	Spring-loaded connection	3RH2911-2DE..
2-pole solid-state-compatible auxiliary switch blocks; full labeling	Spring-loaded connection	3RH2921-2DE..

Solid-state compatible auxiliary switch blocks

Solid-state-compatible auxiliary switch blocks feature two encapsulated contacts, which are particularly well suited to switching low voltages and currents (hard gold-plated contacts) and for operation in dusty atmospheres. The rated operational current is I_e/AC-14 and DC-13: 1 to 300 mA, voltage: 3 to 60 V.

The solid-state compatible auxiliary switch blocks for mounting on the front are available with screw-type, spring-loaded, and ring cable lug connections. The laterally mountable solid-state compatible auxiliary switch blocks are available with spring-loaded connections.

Auxiliary switch blocks with overlapping contacting

Auxiliary switch blocks with overlapping contacting are available with screw-type and spring-loaded connections. The table below shows the versions of the auxiliary switch blocks available with overlapping contacting.

Table 8- 7 Auxiliary switch blocks with overlapping contacting

Size S00 ... S3	Auxiliary switch version	
3RH2911-1FC22 (22U)	22U	2 NO contacts + 2 NC contacts
3RH2911-1FB11 (11U)	11U	1 NO contact + 1 NC contact
3RH2911-1FB22 (11, 11U)	11, 11U	1 NO contact + 1 NC contact + 1 leading NO contact + 1 lagging NC contact

Travel diagrams

The travel diagrams below for auxiliary switches in sizes S00 and S0 apply to standard auxiliary switches and to leading/lagging contacts.

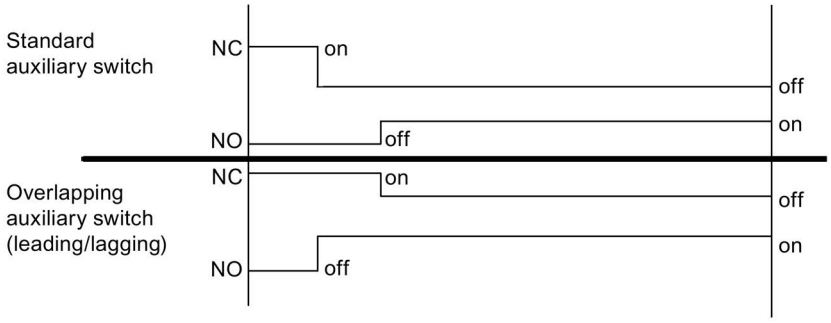

Figure 8-5 Travel diagrams for auxiliary switches (sizes S00 and S0)

8.3.1.2 Configuration

Maximum number of auxiliary switch blocks

The maximum number of auxiliary switch blocks which can be attached is determined by technical constraints and by the applicable standard.

Note

A maximum of four NC contacts is possible (from integrated and laterally mounted auxiliary switch blocks combined).

For 3RT23 and 3RT25 contactors in size S0, auxiliary switches can only be fitted by means of a lateral auxiliary switch block. In the case of the 4-pole variant, you can only fit the auxiliary switch block on one side. With capacitor contactors, you can mount an additional lateral auxiliary switch block on the right side for size S2.

The tables below show the maximum number of auxiliary switch blocks which can be mounted on 3RT2 power contactors/3RH2 contactor relays and the available combination options according to the applicable standard.

Table 8- 8 Auxiliary switch combination options (3RT2 power contactor)

			3RT2 power contactor		
Size		Possible versions	Front		Lateral
			1-pole	4-pole	2-pole
				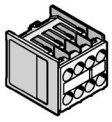	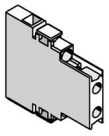
S00	3RT2.1.-.	1	1	0	1
		2	0	1	0
		3	0	0	2[1)]
	3RT2.1.-.H.., 3RT2.1.-.J.., 3RT2.1.-.K.., 3RT2.1.-.M.., 3RT2.1.-.Q.., 3RT2.1.-.V.., 3RT2.1.-.W..		---	---	---
	3RT2… + 3RA27… / 3RA28 …		---	---	---
S0	3RT202.	1	1	0	1
		2	0	1	0
		3	0	0	2[1)]
	3RT232. 3RT252.	1	1	0	1
		2	0	1	0
		3	0	0	1
	3RT202-.K.[2)]		---	---	---
	3RT252.		∑ NC max. 2		
	3RT202, 3RT232.		∑ NC max. 4		
	3RT2… + 3RA27… / 3RA28 …		---	---	---

			3RT2 power contactor		
S2	3RT203.	1	1	0	1
		2	0	1	0
		3	0	0	2[1)]
	3RT233.	1	1	0	1
	3RT253.	2	0	1	0
	3RT203-.K.		---	---	---
	3RT253.		∑ NC max. 2		
	3RT203, 3RT233.		∑ NC max. 4		
	3RT2… + 3RA27… / 3RA28 …		--	--	2[1)]
S3	3RT204.	1	0	1	1
		2	1	0	2[1)]
	3RT204-.K.		---	---	---
	3RT204		∑ NC max. 4		
	3RT2… + 3RA27… / 3RA28 …		---	---	2[1)]

[1)] 1 left + 1 right

Table 8- 9 Auxiliary switch combination options (3RH2 contactor relay)

				3RH21 contactor relay[1)]		
Size		Number of integrated auxiliary switches	Possible versions	Front		Lateral
				1-pole	4-pole	2-pole
						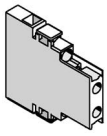
S00	3RH21.-.	2 NO contacts and 2 NC contacts or 3 NO contacts and 1 NC contact or 4 NO contacts	1	1	0	1
			2	0	1	0
			3	0	0	1[2)]
	3RH21..-.H.., 3RH21..-.J.., 3RH21..-.K.., 3RH21..-.M.., 3RH21..-.Q.., 3RH21..-.V.., 3RH21..-.W..			--	--	--
	3RH24..	2 NO contacts and 2 NC contacts or 3 NO contacts and 1 NC contact or 4 NO contacts	1	1	0	--
			2	0	1	--
			3	--	--	--

1) Lateral auxiliary contacts without positively driven operation

2) 1 left and only 3RH2921-.DE11

Number of contacts in series (for control circuit / auxiliary circuit)

A large number of electromechanical contacts in series represents an increased potential for functional faults. Since each contact point has a certain contact resistance, the resulting cumulative voltage drop of the series-switched contacts can be sufficient to have a critical effect on the functionality of certain loads or signal inputs.

In applications where it is necessary to scan a large number of contacts in series (e.g. in enabling circuits or EMERGENCY STOP circuits), suitable measures must be taken to limit the number of contacts switched directly in series. For example, the sequence of contacts can also be distributed across several inputs for controllers, or the contacts can be multiplied elsewhere.

It is not possible to provide a precise indication of the maximum permissible number of series-switched contacts, as this depends on many factors, such as the current, voltage, or other ambient conditions. Experience and feedback from the field have shown that, in general, switching less than 10 contacts in series is a practicable approach.

In addition, the reliability of an individual contact can be increased by switching a second contact in parallel.

Applicable standards

The auxiliary switch blocks can be fitted according to the following standards:

- DIN EN 50005: Definition of terminal designations; however, the order of the terminal designations and the positions of the contacts can be determined by the user.
- DIN EN 50011 for contactor relays: Defined order for terminal designations and position of contacts.
- DIN EN 50012 for power contactors: Defined order for terminal designations. The positions of the contacts can be freely selected.

Note

Standard DIN EN 50012 is no longer valid, but is still used.

Definition: DIN EN 50005

The terminal designations for contactors are defined in DIN EN 50005, which contains general rules. The following basic rules are defined therein for the contacts of auxiliary circuits:

- The terminals of auxiliary contacts are identified by two-digit numbers.
- The units digit is a **function number** (NC contact: 1 and 2, NO contact: 3 and 4)
- The tens digit is a **sequence number** (all contacts with the same function must have different sequence numbers)

Switching devices with a fixed number of auxiliary contacts (NO or NC contacts) may have a two-digit **identification number** assigned to them. The first digit specifies the number of NO contacts, the second the number of NC contacts. No rules have been defined as regards the order of NO and NC contacts in the contactor/contactor relay.

Note

The identification numbers on the auxiliary switch blocks only apply to the attached auxiliary switches.

Definition: DIN EN 50011

The main standard as regards the designations of contacts for auxiliary contactors is DIN EN 50 011, which defines the terminal designations, identification numbers, and codes of certain contactor relays, with a specified contact layout. The number, type, and position of the contacts must be defined by means of an identification number and a subsequent code. For 8-pole contactor relays, the code "E" means that four NO contacts must be arranged in the bottom (rear) contact area.

Definition: DIN EN 50012

DIN EN 50012 defines the terminal designations and identification numbers for the auxiliary contacts of certain contactors. The terminal designations of the auxiliary contacts match those of the corresponding contactor relays with code E (according to DIN EN 50011). For auxiliary contacts on contactors with the same identification number, the terminal designations must be defined as per the order specified in the standard.

Switching order of auxiliary contacts

When contactors are switched on, with standard auxiliary switches the NC contacts are opened first, then the NO contacts are closed.

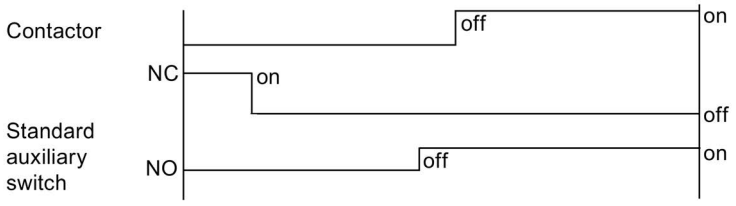

Figure 8-6 Switching auxiliary contacts

Auxiliary switch blocks for contactor relays

The contactor relays with 4 contacts according to DIN EN 50011, with identification code 40E, can be expanded by adding auxiliary switch blocks 80E to 44E, to give contactor relays with 8 contacts according to DIN EN 50011. Identification codes 80E to 44E on the auxiliary switch blocks apply to complete contactors. These auxiliary switch blocks (3RH29 11–1GA.) cannot be combined with contactor relays with identification code 31E or 22E; these are coded. All contactor relays with 4 contacts according to DIN EN 50011, with identification codes 40E to 22E, can be expanded by adding auxiliary switch blocks 40 to 02, to give contactor relays with 6 or 8 contacts according to DIN EN 50005. The identification numbers on the auxiliary switch blocks only apply to the attached auxiliary switch blocks. Fully mounted 8-pole 3RH22 contactor relays are also available; the 4-pole auxiliary switch block on the second Tier is not removable. The terminal designations comply with DIN EN 50011.

Time-delayed auxiliary contacts

The 3RA28 function modules are available for applications which require time-delayed auxiliary contacts.

Reference

More information ...	Can be found in the appendix ...
About the time-delayed switching of contactors	"References" under "Manuals - SIRIUS Modular System (Page 463)" in the manual "SIRIUS - SIRIUS 3RA28 function modules for mounting on 3RT2 contactors".

8.3.1.3 Selection guide for mountable auxiliary switch blocks for power contactors and contactor relays

Terminal designations and identification numbers for auxiliary contacts

Terminal designations

The terminal designations are 2-digit, e.g. 13, 14, 21, 22:

- Tens digit: Sequence number
  - Related terminals have the same sequence number
- Units digit: Function number
  - 1 to 2 for NC contact
  - 3 to 4 for NO contacts

Identification numbers

The identification number indicates the number and type of the auxiliary contacts, e.g. 40, 31, 22, 13:

- First digit: Number of NO contacts
- Second digit: Number of NC contacts

Examples:

- 31 = 3 NO contacts + 1 NC contact
- 40 = 4 NO contacts

Selection guide for mountable auxiliary switch blocks for power contactors and contactor relays

The 3RH29 auxiliary switch blocks for mounting on the front and laterally can be used for both the power contactors and the contactor relays.

At the intersection of the columns and rows you will find the identification number of the combination of a basic device (column) and auxiliary switch block (line).

Additional auxiliary switch block				**3-pole contactors**		
Article number	Auxiliary contact Version			**3RT201 S00**	**3RT201 S00**	**3RT202 S0**
	NO contact	NC contact		**10**	**01**	**11**
						
Auxiliary switches without NO contacts						
3RH2911-.HA01	-	1		**11**	02	**12**
3RH2911-.HA02	-	2		**12**	03	**13**
3RH2911-.HA03	-	3		**13**	04	14
3RH2911-.FA04	-	4	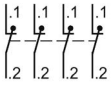	14	-	-
Auxiliary switches with 1 NO contact						
3RH2911-.HA10	1	-		20	11	**21**
3RH2911-.HA11	1	1		**21**	12	**22**

Example 1

Basic device: 3-pole 3RT2017 motor contactor with 1 NO contact
Desired: 1 NO contact and 4 NC contacts (Ident. No. 14)
Result: 3RH2911-.FA04 auxiliary switch block

Example 2

Basic device: 3-pole 3RT2023 motor contactor with 1 NO contact and 1 NC contact
Desired: 1 NO contact and 4 NC contacts (Ident. No. 14)
Result: 3RH2911-.HA03 auxiliary switch block

Note

The same auxiliary switches can be fitted to size S2/S3 contactors as to size S0.

Example 2 can also be used for sizes S2/S3.

	Example 1	Example 2
Type	3RT20 motor contactor, S00 with 1 NO contact (1NO)	3RT20 motor contactor, S0 (S2) with 1 NO contact and 1 NC contact (1 NO + 1 NC)
	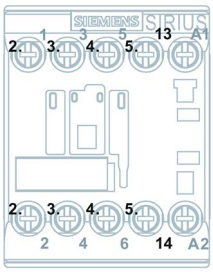	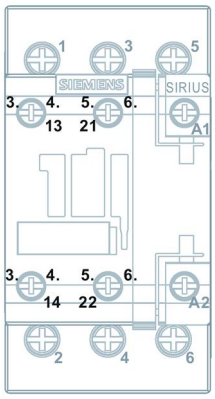
Sequence number	2. 3. 4. 5.	3. 4. 5. 6.
Type	Auxiliary switches with 4 NC contacts, 3RH2911-.FA04	Auxiliary switches with 3 NC contacts, 3RH2911-.HA03
	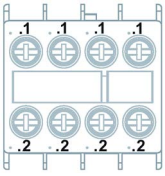	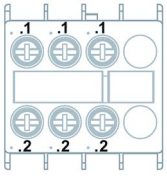
Function number	.1 .1 .1 .1 .2 .2 .2 .2	.1 .1 .1 .2 .2 .2
Assembly	3RT20 motor contactor, S00 with auxiliary switch block	3RT20 motor contactor, S0 with auxiliary switch block
	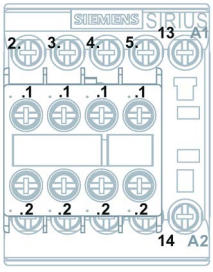	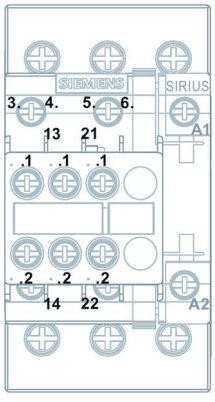
Terminal designation	13 21 31 41 51 14 22 32 42 52	13 21 31 41 51 14 22 32 42 52
Result	Ident. 14	Ident. 14

Table 8- 10 Auxiliary switches for mounting on the front for 3-pole and 4-pole contactors

Additional auxiliary switch block				**3-pole contactors**			**4-pole contactors**			
Article No.	Auxiliary contacts Version			S00		S0/S2/S3	S00		S0/S2/S3	
	NO	NC		**3RT201**	**3RT201**	**3RT20.**	**3RT231**	**3RT251**	**3RT23.**	**3RT25.**
				10	**01**	**11**	**--**	**--**	**11**	**11**
										
				2. 3. 4. 5.	5. 6. 7. 8.	3. 4. 5. 6.	1. 2. 3. 4.	1. 2. 3. 4.	3. 4. 5. 6.	3. 4. 5. 6.
				According to EN 50012 [1]			**According to EN 50012** [1]			
Without NO contacts										
3RH2911- .HA01	-	1		**11**	02	**12**	01	01	**12**	**12**
3RH2911- .HA02	-	2		**12**	03	**13**	02	02	**13**	-
3RH2911- .HA03	-	3		**13**	04	14	03	-	-	-
3RH2911- .FA04	-	4	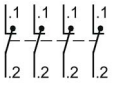	14	-	-	-	-	-	-
With 1 NO contact										
3RH2911- .HA10	1	-		20	11	**21**	**10**	**10**	**21**	**21**
3RH2911- .HA11	1	1		**21**	12	**22**	11	11	**22**	**22**
3RH2911- .HA12	1	2		**22**	13	**23**	12	12	**23**	-
3RH2911- .HA13	1	3	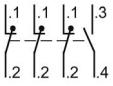	**23**	14	24	13	-	24	24

Additional auxiliary switch block				3-pole contactors			4-pole contactors			
With 2 NO contacts										
3RH2911-.HA20	2	-		30	21	**31**	20	20	**31**	**31**
3RH2911-.HA21	2	1		**31**	22	**32**	21	21	**32**	**32**
3RH2911-.HA22	2	2	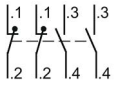	**32**	23	33	22	22	33	-
3RH2911-.FA22	2	2	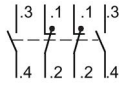	32	23	33	**22**	**22**	33	-
With 3 NO contacts										
3RH2911-.HA30	3	-		40	31	**41**	30	30	**41**	**41**
3RH2911-.HA31	3	1	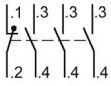	**41**	32	42	31	31	42	42
With 4 NO contacts										
3RH2911-.FA40	4	-	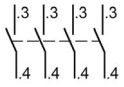	50	41	51	40	40	51	51
With make-before-break										
3RH2911-.FB11	1	1		21	12	22	11	11	22	22
3RH2911-.FB22	2	2	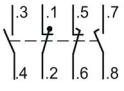	32	23	33	22	22	33	-
3RH2911-.FC22	2	2	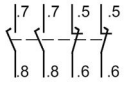	32	23	33	22	22	33	-

Additional auxiliary switch block				3-pole contactors			4-pole contactors			
Fully labeled										
3RH2911-1AA10	1	-		20	11	21	10	10	21	21
3RH2911-1BA10	1	-		20	11	21	10	10	21	21
3RH2911-1AA01	-	1		11	02	12	01	01	12	12
3RH2911-1BA01	-	1		11	02	12	01	01	12	12
3RH2911-1LA11	1	1		21	12	22	11	11	22	22
3RH2911-1MA11	1	1		21	12	22	11	11	22	22
3RH2911-1LA20	2	-		30	21	31	20	20	31	31
3RH2911-1MA20	2	-		30	21	31	20	20	31	31

Additional auxiliary switch block				3-pole contactors			4-pole contactors			
Fully labeled (for contactor relays)										
3RH2911-.GA40	4	-	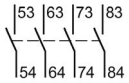	-	-	-	-	-	-	-
3RH2911-.GA31	3	1	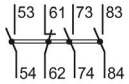	-	-	-	-	-	-	-
3RH2911-.GA22	2	2	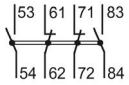	-	-	-	-	-	-	-
3RH2911-.GA13	1	3	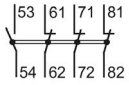	-	-	-	-	-	-	-
3RH2911-.GA04	-	4	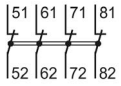	-	-	-	-	-	-	-
Fully labeled; special version										
3RH2911-.XA40-0MA0	4	-	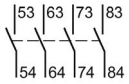	50	41	51	40	40	51	51
3RH2911-.XA31-0MA0	3	1	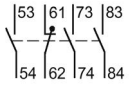	41	32	42	31	31	42	42
3RH2911-.XA22-0MA0	2	2	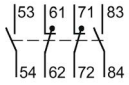	32	23	33	22	22	33	-
3RH2911-.XA04-0MA0	-	4	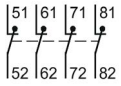	14	-	-	-	-	-	-

Additional auxiliary switch block				3-pole contactors			4-pole contactors			
Solid-state compatible										
3RH2911-.NF02	-	2	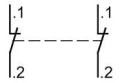	12	03	13	02	02	13	-
3RH2911-.NF11	1	1	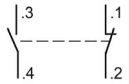	21	12	22	11	11	22	22
3RH2911-.NF20	2	-	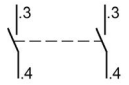	30	21	31	20	20	31	31

[1]) Assemblies in accordance with EN 50012, EN 50011 or IEC 60947-5-1 are in **bold** type. All assemblies comply with EN 50005.

Table 8- 11 Auxiliary switches for mounting on the front for contactor relays

Additional auxiliary switch block				Contactor relays		
Article No.	Auxiliary contacts Version			S00		
	NO	NC		**3RH21**		
				40E	**31E**	**22E**
				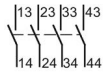		
				5. 6. 7. 8	5. 6. 7. 8	5. 6. 7. 8
				According to EN 50011 [1]		
Without NO contacts						
3RH2911-.HA01	-	1		**41X**	**32X**	**23X**
3RH2911-.HA02	-	2		**42E**	**33X**	24
3RH2911-.HA03	-	3		43	34	-
3RH2911-.FA04	-	4	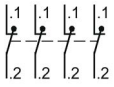	**44E**	-	-
With 1 NO contact						
3RH2911-.HA10	1	-		**50E**	**41E**	**32E**
3RH2911-.HA11	1	1		**51X**	**42X**	**33X**
3RH2911-.HA12	1	2		52	43	34
3RH2911-.HA13	1	3	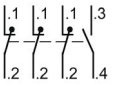	**53X**	**44X**	-

Additional auxiliary switch block				Contactor relays		
With 2 NO contacts						
3RH2911-.HA20	2	-		**60E**	**51X**	**42X**
3RH2911-.HA21	2	1		61	52	43
3RH2911-.HA22	2	2	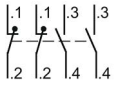	**62X**	53	**44X**
3RH2911-.FA22	2	2	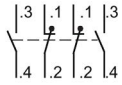	**62X**	53	**44X**
With 3 NO contacts						
3RH2911-.HA30	3	-		70	61	52
3RH2911-.HA31	3	1	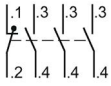	**71X**	**62X**	**53X**
With 4 NO contacts						
3RH2911-.FA40	4	-	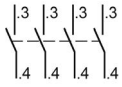	**80E**	**71X**	**62X**
With make-before-break						
3RH2911-.FB11	-	1		51	42	33
3RH2911-.FB22	-	2	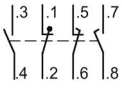	62	53	44
3RH2911-.FC22	-	3	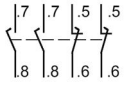	62	53	44

Additional auxiliary switch block				Contactor relays		
Fully labeled						
3RH2911-1AA10	1	-		50	41	32
3RH2911-1BA10	1	-		50	41	32
3RH2911-1AA01	-	1		41	32	23
3RH2911-1BA01	-	1		41	32	23
3RH2911-1LA11	1	1		51	42	33
3RH2911-1MA11	1	1		51	42	33
3RH2911-1LA20	2	-		60	51	42
3RH2911-1MA20	2	-		60	51	42

Additional auxiliary switch block				Contactor relays		
Fully labeled (for contactor relays)						
3RH2911- .GA40	4	-	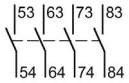	**80E**	-	-
3RH2911- .GA31	3	1	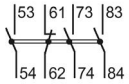	**71E**	-	-
3RH2911- .GA22	2	2	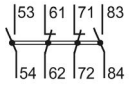	**62E**	-	-
3RH2911- .GA13	1	3	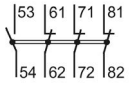	**53E**	-	-
3RH2911- .GA04	-	4	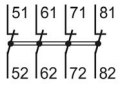	**44E**	-	-
Fully labeled; special version						
3RH2911- .XA40 -0MA0	4	-	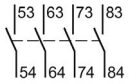	**80E**	**71X**	**62X**
3RH2911- .XA31 -0MA0	3	1	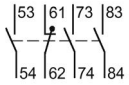	**71E**	**62X**	53
3RH2911- .XA22 -0MA0	2	2	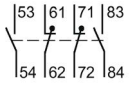	**62E**	53	**44X**
3RH2911- .XA04 -0MA0	-	4	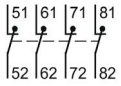	**44E**	-	-

Additional auxiliary switch block				Contactor relays		
Solid-state compatible						
3RH2911-.NF02	-	2	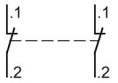	42	33	24
3RH2911-.NF11	1	1	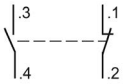	51	42	33
3RH2911-.NF20	2	-	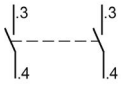	60	51	42

[1] Assemblies in accordance with EN 50012, EN 50011 or IEC 60947-5-1 are in **bold** type.
All assemblies comply with EN 50005.

Table 8- 12 Lateral auxiliary switch blocks for 3-pole and 4-pole contactors

Additional auxiliary switch block					**3-pole contactors**			**4-pole contactors**			
Article number	Auxiliary contacts Version				**S00**		**S0/S2**	**S00**		**S0/S2**	
	NO	NC			**3RT201**	**3RT201**	**3RT20.**	**3RT231**	**3RT251**	**3RT232**	**3RT252**
					10	**01**	**11**	**--**	**--**	**11**	**11**
											
					2. 3. 4. 5.	5. 6. 7. 8.	3. 4. 5. 6.	1. 2. 3. 4.	1. 2. 3. 4.	3. 4. 5. 6.	3. 4. 5. 6.
					According to EN 50012 [1]			**According to EN 50012** [1]			
For size S00			Left	Right							
3RH2911-.DA02	-	2			**12**	-	-	02	02	-	-
3RH2911-.DA02	-	4			14	-	-	-	-	-	-
3RH2911-.DA11	1	1			**21**	-	-	11	11	-	-
3RH2911-.DA11	2	2			32	-	-	22	22	-	-
3RH2911-.DA20	2	-			30	-	-	20	20	-	-
3RH2911-.DA20	4	-			50	-	-	40	40	-	-
3RH2911-.DA20 + 3RH2911-.DA11	2 1	- 1			**41**	-	-	31	31	-	-
3RH2911-.DA20 + 3RH2911-.DA02	2 -	- 2			**32**	-	-	22	22	-	-
3RH2911-.DA11 + 3RH2911-.DA02	1 -	1 2			**23**	-	-	13	-	-	-

Additional auxiliary switch block					3-pole contactors			4-pole contactors			
For size S0 / S00											
3RH2921-.DA02	-	2			12	03	**13**	02	02	**13**	-
3RH2921-.DA02	-	4			14	-	-	-	-	-	-
3RH2921-.DA11	1	1			21	12	**22**	11	11	**22**	**22**
3RH2921-.DA11	2	2			32	23	33	22	22	33	-
3RH2921-.DA20	2	-			30	21	**31**	20	20	**31**	**31**
3RH2921-.DA20	4	-			50	41	51	40	40	51	51
3RH2921-.DA20 + 3RH2921-.DA11	2 1	- 1			41	32	42	31	31	42	42
3RH2921-.DA20 + 3RH2921-.DA02	2 -	- 2			32	23	33	22	22	33	-
3RH2921-.DA11 + 3RH2921-.DA02	1 -	1 2			23	14	24	13	-	-	-
For contactor relays											
3RH2921-.DA02	-	2			-	-	-	-	-	-	-
3RH2921-.DA11	1	1			-	-	-	-	-	-	-
3RH2921-.DA20	2	-			-	-	-	-	-	-	-

Additional auxiliary switch block					3-pole contactors			4-pole contactors			
Solid-state-compatible for size S00											
3RH2911-2DE11	1	1			21	-	-	11	11	-	-
3RH2911-2DE11	2	2			32	-	-	22	22	-	-
Solid-state-compatible for size S0 / S00											
3RH2921-2DE11	1	1			21	12	22	11	11	22	22
3RH2921-2DE11	2	2			32	23	33	22	22	33	-
Solid-state-compatible for contactor relays											
3RH2921-.DE11	1	1			-	-	-	-	-	-	-

[1] Assemblies in accordance with EN 50012, EN 50011 or IEC 60947-5-1 are in **bold** type. All assemblies comply with EN 50005.

Table 8- 13 Lateral auxiliary switch blocks for contactor relays

Additional auxiliary switch block					**Contactor relays**		
Article number	Auxiliary contacts Version				**S00**		
	NO	NC			**3RH21**		
					40E	**31E**	**22E**
					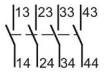		
					5. 6. 7. 8	5. 6. 7. 8	5. 6. 7. 8
					According to EN 50011 [1]		
For size S00			Left	Right			
3RH2911-.DA02	-	2			-	-	-
3RH2911-.DA02	-	4			-	-	-
3RH2911-.DA11	1	1			-	-	-
3RH2911-.DA11	2	2			-	-	-
3RH2911-.DA20	2	-			-	-	-
3RH2911-.DA20	4	-			-	-	-
3RH2911-.DA20 + 3RH2911-.DA11	2 1	- 1			-	-	-
3RH2911-.DA20 + 3RH2911-.DA02	2 -	- 2			-	-	-
3RH2911-.DA11 + 3RH2911-.DA02	1 -	1 2			-	-	-

Additional auxiliary switch block					Contactor relays		
For sizes S0 / S2 / S3							
3RH2921-.DA02	-	2			-	-	-
3RH2921-.DA02	-	4			-	-	-
3RH2921-.DA11	1	1			-	-	-
3RH2921-.DA11	2	2			-	-	-
3RH2921-.DA20	2	-			-	-	-
3RH2921-.DA20	4	-			-	-	-
3RH2921-.DA20 + 3RH2921-.DA11	2 1	- 1			-	-	-
3RH2921-.DA20 + 3RH2921-.DA02	2 -	- 2			-	-	-
3RH2921-.DA11 + 3RH2921-.DA02	1 -	1 2			-	-	-
For contactor relays							
3RH2921-.DA02	-	2			**42Z**	**33X**	24
3RH2921-.DA11	1	1			**51X**	**42X**	**33X**
3RH2921-.DA20	2	-			**60Z**	**51X**	**42X**

Additional auxiliary switch block					Contactor relays		
Solid-state-compatible for size S00							
3RH2911-2DE11	1	1			-	-	-
3RH2911-2DE11	2	2			-	-	-
Solid-state-compatible for sizes S0 ... S3							
3RH2921-2DE11	1	1			-	-	-
3RH2921-2DE11	2	2			-	-	-
Solid-state-compatible for contactor relays							
3RH2921-.DE11	1	1			**51X**	**42X**	**33X**

[1] Assemblies in accordance with EN 50012, EN 50011 or IEC 60947-5-1 are in **bold** type. All assemblies comply with EN 50005.

8.3.1.4 Mounting/Disassembly

The procedures for mounting and disassembling auxiliary switch blocks for mounting on the front and laterally are described below.

Mounting the front-side 2- / 4-pole auxiliary switch block (sizes S00 / S0 / S2 / S3)

The following illustration shows an example of mounting size S00.

Sizes S0 / S2 / S3 are mounted in the same way.

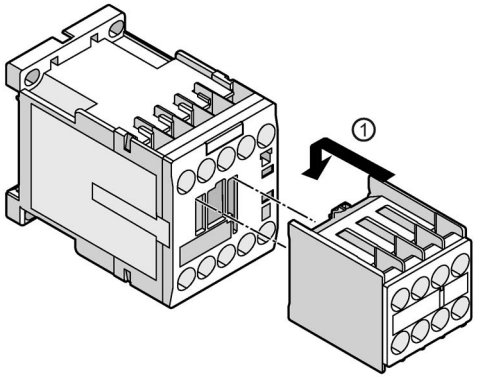

① Push the auxiliary switch, which can be mounted on the front, into the location hole on the contactor. Pull it down until it engages.

Disassembling the front-mounted auxiliary switch - 2- / 4-pole auxiliary switch block (sizes S00 / S0 / S2 / S3)

The following illustration shows an example of disassembling size S00.

Sizes S0 / S2 / S3 are disassembled in the same way.

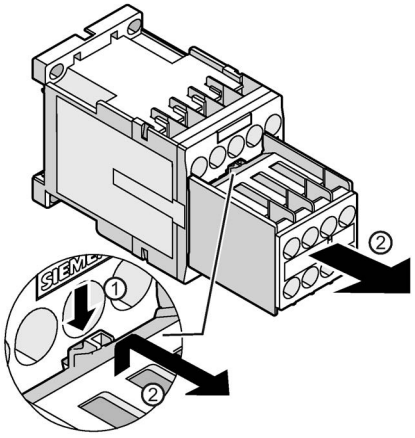

① Activate the release lever on the auxiliary switch block.

② Push the auxiliary switch block up and pull it forward to remove it from the contactor.

Note

The procedure for mounting/disassembling the 1-pole auxiliary switch block on the front is the same.

Mounting the lateral auxiliary switch (sizes S00 / S0 / S2 / S3)

The following illustration shows an example of mounting size S0.

Sizes S00 / S2 / S3 are mounted in the same way.

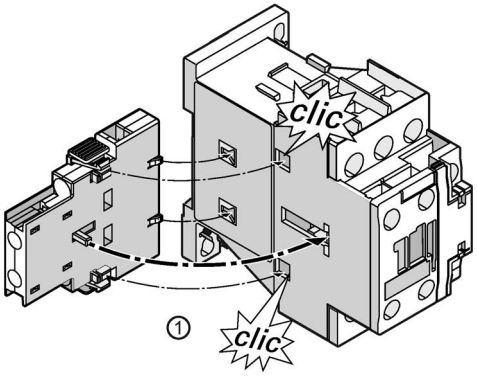

① Attach the lateral auxiliary switch to the contactor and snap it on.

Note

The laterally mountable auxiliary switch blocks according to DIN EN 50012 can only be used if no 2-pole or 4-pole auxiliary switch blocks are snapped onto the front.

Mounting the laterally-mounted auxiliary switch (sizes S00 / S0 / S2 / S3)

The following illustration shows an example of disassembling size S0.

Sizes S00 / S2 / S3 are mounted in the same way.

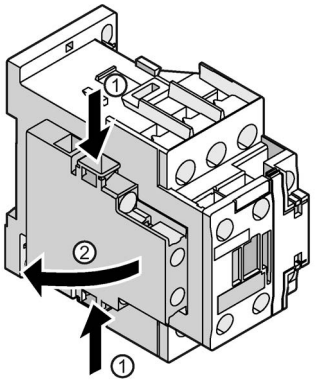

① Release the lateral auxiliary switch by pressing the chequered areas on the auxiliary switch down.

② Remove the auxiliary switch from the side of the contactor.

8.3.2 Auxiliary switch blocks for 3RT1 power contactors

8.3.2.1 Description

Function

Size S6 to S12 contactors feature a laterally mounted auxiliary switch fitted at the factory.

Versions and designs

The auxiliary switches are available with screw-type or spring-loaded connection system in the following versions:

- On the front 1-pole to 4-pole
- Lateral, 2-pole

Optionally, auxiliary switches with connection from above or below are available. These auxiliary switch blocks have fixed location identifiers and are supplied with screw connections only. For spring-loaded connection, 4-pole auxiliary switch blocks are offered that are only fitted with auxiliary contacts 1 and 2.

2-pole auxiliary switches can be mounted on the side in addition to the auxiliary switches already mounted at the factory. If 1-pole auxiliary switch blocks are used, the location identifiers on the contactor must be noted when making a selection for ordering.

Auxiliary switch blocks

The table below provides an overview of all available auxiliary switch blocks:

Design of the auxiliary switch block	Size S6 to S12	Connection system	Article number
4-pole auxiliary switch blocks	Can be mounted onto the front	Screw terminals	3RH1921-1F..
		Spring-loaded terminals	3RH1921-2F...
1-pole auxiliary switch blocks	Can be mounted onto the front	Screw terminals	3RH1921-1C...
		Spring-loaded terminals	3RH1921-2C...
2-pole auxiliary switch blocks	Laterally mountable	Screw terminals	3RH1921-1D... 3RH1921-1J... 3RH1921-1E... 3RH1921-1K...
		Spring-loaded terminals	3RH1921-2D... 3RH1921-2J... 3RH1921-2E... 3RH1921-2K...
Solid-state time-delay auxiliary switch blocks	Can be mounted onto the front ON-delay	Screw terminals	3RT1926-2E...
	Can be mounted onto the front OFF-delay without control signal		3RT1926-2F...
	Can be mounted onto the front Star-delta (wye-delta) starting (varistor integrated)		3RT1926-2G...
Solid-state compatible auxiliary switch blocks	Laterally mountable	Spring-loaded terminals	3RH1921-2DE11

Solid-state compatible auxiliary switch blocks

Solid-state-compatible auxiliary switch blocks feature two encapsulated contacts, which are particularly well suited to switching low voltages and currents (hard gold-plated contacts) and for operation in dusty atmospheres. The rated operational current is I_e/AC-14 and DC-13: 1 to 300 mA, voltage: 3 to 60 V.

The solid-state compatible auxiliary switch blocks for mounting on the front are available with screw-type, spring-loaded, and ring cable lug connections. The laterally mountable solid-state compatible auxiliary switch blocks are available with spring-loaded connections.

Sizes S6 to S12 (3RH1921-.FE22): equipped with two enclosed auxiliary contacts and two standard auxiliary contacts, 1 NO contact + 1 NC contact respectively.

Auxiliary switch blocks with overlapping contacting

Auxiliary switch blocks with overlapping contacting are available with screw-type and spring-loaded connections. The table below shows the versions of the auxiliary switch blocks available with overlapping contacting.

Table 8- 14 Auxiliary switch blocks with overlapping contacting

Size S6 ... S12	Auxiliary switch version	
3RH1921-.FC22	22U	2 NO contacts + 2 NC contacts
3RH1921-1CD01	01	1 NC contact, lagging
3RH1921-1CD10	10	1 NO contact, leading

Expansion of auxiliary switch equipment

The contactors of sizes S6 to S12 are equipped with lateral 2-pole auxiliary switch blocks.

- Air-break contactors and vacuum contactors with conventional / electronic operating mechanism: 2 NO contacts + 2 NC contacts
- Air-break contactors with remaining lifetime signal: 1 NO contact + 1 NC contact

The devices can be expanded with laterally-mounted auxiliary switch blocks (for air-break contactors and vacuum contactors) or front-mounted auxiliary switch blocks (for air-break contactors only).

The table below shows the expansion options for contactors in sizes S6 to S12.

Size	Auxiliary switch block	Connection system
S6 to S12	• 1-pole and 4-pole (can be mounted on the front) • 2-pole (laterally mountable)	Screw-type connection system Spring-loaded connection system
	Feeder auxiliary switch (can be mounted on the front): • 2-pole (1 NO contact + 1 NC contact) • 2-pole (2 NO contacts or 2 NC contacts) Cable entry from top or bottom possible	Screw-type connection system

8.3.2.2 Configuration

Maximum number of auxiliary switch blocks

The maximum number of auxiliary switch blocks which can be attached is determined by technical constraints and by the applicable standard.

The tables below show the maximum number of auxiliary contacts that can be mounted on 3RT1 power contactors.

Operating mechanism type	Contactor type	In the lower operating range	
		0.8 x U_{Smin}	0.85 x U_{Smin}
3RT1...-.A conventional	3RT10 / 3RT14 air-break contactors	8, of which max. 4 NC contacts	9, of which max. 6 NC contacts
	3RT12 vacuum contactors	8, of which max. 4 NC contacts	8, of which max. 6 NC contacts
3RT1...-.N electronic	Air-break contactors / vacuum contactors	8, of which max. 4 NC contacts	
with RLT 3RT1...-.P/Q	3RT10 / 3RT14 air-break contactors	8, of which max. 4 NC contacts	

Note

When two 2-pole laterally mountable auxiliary switch blocks are used, one block must be attached on the right and one on the left for reasons of symmetry.

Note about fitting auxiliary switches

When using the 3RA1954-2A mechanical interlock:

- In the case of contactors with conventional / electronic operating mechanism 3RT1...-.A/N:
  an additional auxiliary switch block can be attached between the contactors
- In the case of contactors with remaining lifetime signal RLT 3RT1...-.P/Q:
  the left mounted auxiliary contact block of the right contactor must be removed.

Manual operation of the contactor relays

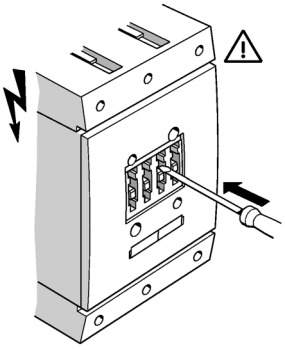

With 3RT10/14 air-break contactors, the lateral auxiliary contacts can be operated for test purposes by pressing the auxiliary switch receptacle / switch position indicator on the front. By doing this the main contacts would also touch, without resulting in contact resilience.

NOTICE
Hazardous voltage
It must be ensured that the contactors are disconnected from the power system.

Switching order of auxiliary contacts

When contactors are switched on, with standard auxiliary switches the NC contacts are opened first, then the NO contacts are closed.

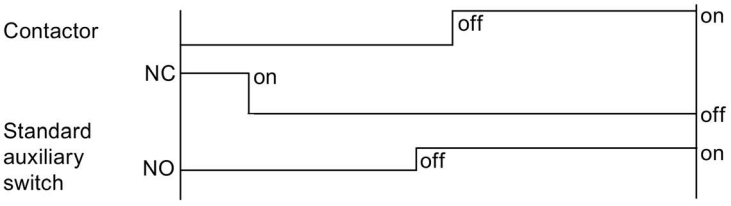

Figure 8-7 Switching auxiliary contacts

8.3.2.3 Terminal designations and identification numbers for auxiliary contacts

Terminal designations

The terminal designations are 2-digit, e.g. 13, 14, 21, 22:

- Tens digit: Sequence number
  - Related terminals have the same sequence number
- Units digit: Function number
  - 1 to 2 for NC contact
  - 3 to 4 for NO contacts

Identification numbers

The identification number indicates the number and type of the auxiliary contacts, e.g. 40, 31, 22, 13:

- First digit: Number of NO contacts
- Second digit: Number of NC contacts

Examples:

- 31 = 3 NO contacts + 1 NC contact
- 40 = 4 NO contacts

Expansion of the contactors (sizes S6 to S12)

On contactors of sizes S6 to S12, 1-pole auxiliary switch blocks can also be attached as an alternative to the 4-pole auxiliary switch blocks.

The terminal designations of the 1-pole auxiliary switch blocks consist of identification numbers (location identifiers) on the basic unit, and function numbers on the auxiliary switch blocks.

8.3.2.4 Mounting/Disassembly

The procedures for mounting and disassembling auxiliary switch blocks for mounting on the front and laterally are described below.

Mounting the front-side 2- / 4-pole auxiliary switch block

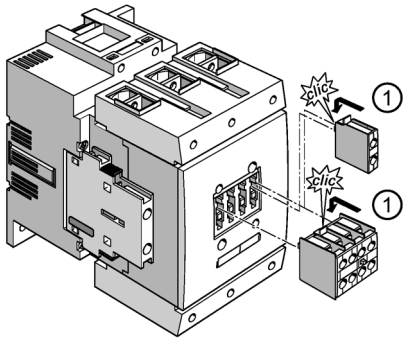

① Push the auxiliary switch, which can be mounted on the front, into the location hole on the contactor. Pull it down until it engages.

Disassembling the front-mounted auxiliary switch - 2- / 4-pole auxiliary switch block

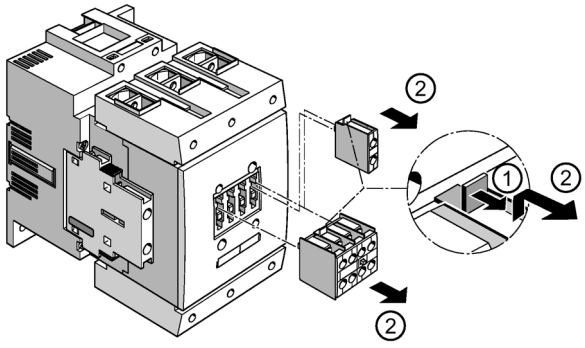

① Activate the release lever on the auxiliary switch block.
② Push the auxiliary switch block up and pull it forward to remove it from the contactor.

Note

The procedure for mounting/disassembling the 1-pole auxiliary switch block on the front is the same.

Mounting the lateral auxiliary switch

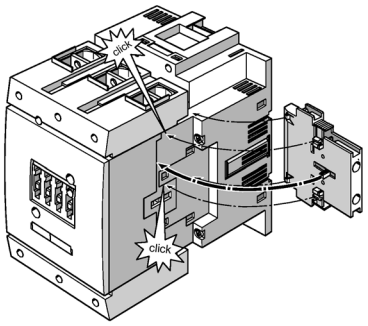

① Attach the lateral auxiliary switch to the contactor and snap it on.

Note

The laterally mountable auxiliary switch blocks according to DIN EN 50012 can only be used if no 2-pole or 4-pole auxiliary switch blocks are snapped onto the front.

Mounting a second lateral auxiliary switch

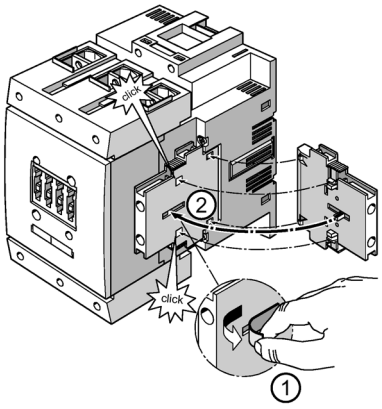

① Remove the sticker from the laterally mounted auxiliary switch.

② Attach the second lateral auxiliary switch to the mounted lateral auxiliary switch and snap it on.

Disassembling the laterally-mounted auxiliary switch

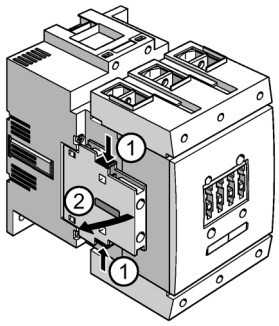

① Release the lateral auxiliary switch by pressing the chequered areas on the auxiliary switch down.

② Remove the auxiliary switch from the side of the contactor.

8.4 Surge suppressor

8.4.1 Description

When contactor coils are disconnected, overvoltages occur (inductive loads). Voltage peaks of up to 4 kV can occur at a rate of rise of voltage of 1 kV/microsecond (shower discharges). This leads to:

- Substantial erosion and, as a result, premature wear of the contacts which switch the coil.
- Injection of interfering signals, which lead to fault signals in electronic controls.

Therefore, all contactor coils should be attenuated against switching overvoltages, particularly when working in conjunction with electronic controls.

Furthermore, the high rate of rise of the voltage waveforms generated can lead to the capacitive coupling of significant interfering signals with adjacent systems. They necessitate an RC circuit directly at the location where the source of interference originated, i.e. at the contactor coil. This prevents overvoltages from occurring directly at the place of origin and protects the electronic components which are sensitive to voltage too. It also prevents the capacitive coupling of interfering signals with the control cables of electronic circuits.

Types of attenuation

The following RC circuit elements are commonly used for overvoltage attenuation; they are connected in parallel with the contactor coil:

- RC element
- Freewheel diode, diode combination
- Varistors

All 3RT1 / 3RT2 contactors and 3RH21 contactor relays can be subsequently connected to RC elements or varistors for damping opening surges in the coil. Diodes or diode combinations can also be used.

Coupling relays, on the other hand, do not require any additional surge suppressor and can be used directly with electronic controls.

Reference

More information ...	Can be found in the chapter ...
About coupling relays	Coupling relays (Page 109)

Surge suppressors for 3RT1 / 3RT2 / 3RH21 contactors

The following surge suppressors are available for the 3RT1 / 3RT2 / 3RH21 contactors:

Table 8- 15 Overview - surge suppressors with LED

Surge suppressors	Size S00	Size S0	Size S2	Size S3
Noise suppression diode	3RT2916-1L.00	---	---	---
Diode combination	---	3RT2926-1MR00	---	---
Varistor	3RT2916-1J.00	3RT2926-1J.00	3RT2936-1J.00	3RT2936-1J.00 [1)]
RC element	---	---	---	---

Table 8- 16 Overview - surge suppressors without LED

Surge suppressors	Size S00	Size S0	Size S2	Size S3	Size S6 - S12
Suppression diode	3RT2916-1DG00	---	---	---	---
Diode combination	3RT2916-1EH00	3RT2926-1E.00	3RT2936-1E.00	3RT2936-1E.00[1)]	---
Varistor	3RT2916-1B.00	3RT2926-1B.00	3RT2936-1B.00	3RT2936-1B.00[1)]	---
RC element	3RT2916-1C.00	3RT2926-1C.00	3RT2936-1C.00	3RT2946-1C.00	3RT1956-1C...

[1)] Product version 03 and higher

Identification of the surge suppressors for 3RT2 contactors sizes S0, S2 and S3

Table 8- 17 Identification of the surge suppressors for 3RT2 contactors sizes S0, S2 and S3

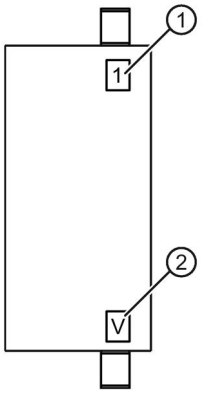

①		AC	DC
1		24 ... 48 V	24 ... 70 V
			12 ... 24 V [1]
		–	24 V
2		48 ... 127 V	70 ... 150 V
			24 ... 70 V [1]
3		127 ... 240 V	150 ... 250 V
			70 ... 150 V [1]
		–	30 ... 250 V
4		240 ... 400 V	–
5	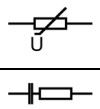	400 ... 600 V	–
②			
V	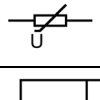	3RT2926-1B.00 3RT2936-1B.00	
	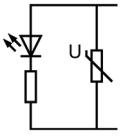	3RT2926-1J.00 3RT2936-1J.00	
R		3RT2926-1C.00 3RT2936-1C.00 3RT2946-1C.00	
D		3RT2926-1E.00 3RT2936-1E.00	
	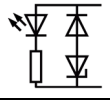	3RT2926-1M.00	

1) Applies to 3RT2926-1J.00 and 3RT2936-1J.00 (varistor with LED)

Switching overvoltage - surge suppressor

Overvoltages when switching off contactors (inductive load) can cause faults in electronic devices (timing relays, PLCs, coupling modules) in the same network if the contactors are used without the appropriate filters.

Table 8- 18 Switching overvoltage - surge suppressor

Description	Suitable for	Limited to	Additional delay	Advantage	Disadvantage
Freewheel diode	DC	Forward voltage (U_D = ~1 V)	Very high (6-9x)	• Non-critical dimensioning • Lowest induction voltage • Very simple and reliable • Low-cost	• Long drop-out delay • Short-circuit on failure
Suppressor diode	AC/DC	Breakdown voltage (U_{BR})	Very low	• Non-critical dimensioning • Simple design • Protected against reverse polarity • Short pick-up time	No attenuation below the breakdown voltage (U_{BR})
Diode combination	DC	Breakdown voltage (U_{BR})	Very low	• Non-critical dimensioning • Simple design • Short pick-up time	No attenuation below the breakdown voltage (U_{BR})
Varistor	AC/DC	Varistor voltage ($U_{Varistor}$)	Very low	• Non-critical dimensioning • High energy absorption • Very simple design	No attenuation below $U_{Varistor}$
RC element	AC/DC	U_{RC}	Very low	• HF attenuation through energy storage • Immediate shutdown • Extremely suitable for AC	• Exact dimensions required • Expensive

8.4.2 Configuration

Selection aid

The table below compares the effects of the different surge suppressors and specifies the applications to which they are most suited.

Table 8- 19 Mode of operation and preferred applications of surge suppressors

Surge suppressor		Suitable for Control voltage	Overvoltage is limited ...	Effect	Advantages/disadvantages		Preferred application
Noise suppression/freewheel diode	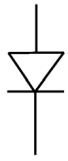	DC	To 0.7 V	• OFF-delay becomes considerably longer (6 to 10 times) • With contactors of size S0 or larger, "2-stage drop-out"[1] cannot be excluded	Advantages	• Simple implementation • Reliable • Non-critical dimensioning • Low induction voltage	Instable control commands/control supply voltage
					Disadvantages	• Long drop-out delay • Only suitable for size S00	
Diode combination: Noise suppression and Zener diode	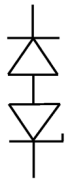	DC	To Zener voltage	• OFF-delay becomes longer (2 to 6 times) • A 2-stage drop-out no longer occurs	Advantages	• Non-critical dimensioning	EMC-critical components in the vicinity
					Disadvantages	• Attenuation only above U_{ZD} (10 V)	
Varistor	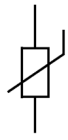	AC/DC	To varistor voltage	• OFF-delay becomes only slightly longer (2 to 5 ms)	Advantages	• Energy absorption • Non-critical dimensioning • Simple implementation	Suitable for most standard applications, e.g. in the SIMATIC environment
					Disadvantages	• Attenuation only above U_{VDR}	

Surge suppressor		Suitable for Control voltage	Overvoltage is limited ...	Effect	Advantages/disadvantages		Preferred application
RC elements	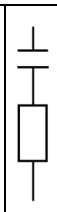	AC/DC	According to dimensioning	• OFF-delay remains unchanged • Rates of rise of voltage are attenuated	Advantages	• RF attenuation • Well suited to AC voltage • Attenuation independent of levels	With critical operating times
					Disadvantages	• High inrush current • Sensitive to harmonics	
Suppressor diode	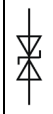	AC/DC	Breakdown voltage U_{BR}	• Rate of rise of the voltage is not reduced • Additional drop-out delay is too low (1 to 5 ms)	Advantages	• Non-critical dimensioning • Simple design • Protected against reverse polarity • Short pick-up time	Suitable for most standard applications, e.g. in the SIMATIC environment
					Disadvantages	• Attenuation only above the breakdown voltage U_{BR}	

1) The drop-out speed falls to zero once or twice for a few milliseconds:

- Safe drop-out is always ensured during current-free switching.
- When switching with a current present, the contacts are subjected to a higher thermal load. This can lead to an overload when switching at the high current limit.

Technical background information

The oscillograms below show what happens when contactor coils are disconnected without and with overvoltage attenuation.

Coil without RC circuit

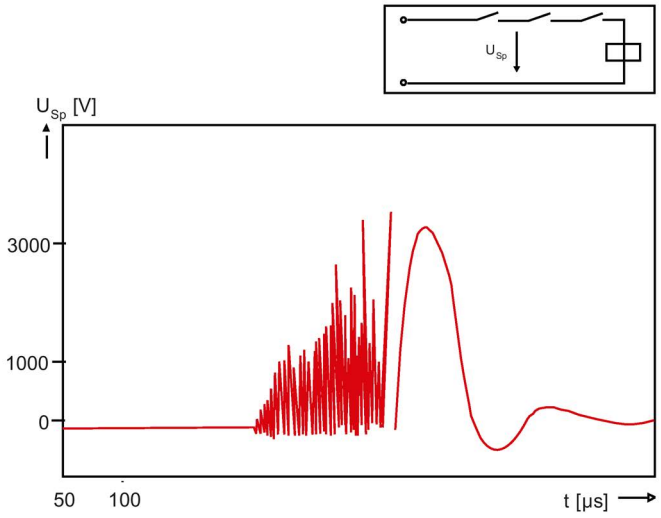

Figure 8-8 Disconnection of a contactor coil without RC circuit

Oscillogram of the disconnection of a contactor relay coil; the coil does not have an RC circuit: Shower discharges are clearly visible (voltage peaks up to several kV). Once the disconnection process has started, the shower discharges occur for about 250 µs; after that, the vibration is simply damped.

RC circuit with varistor

Varistors (voltage-dependent resistors) limit the maximum level of the overvoltage, as they become conductive above a certain threshold voltage. Shower discharges occur up to that level, in a similar way to those seen with the solenoid coil without an RC circuit, but they do not last as long overall. Unlike an RC element, varistors do not reduce the rate of the voltage rise. Varistors can be used for DC- and AC-operated contactors.

Note

Varistors extend the contactor's OFF time by around 2 to 5 ms.

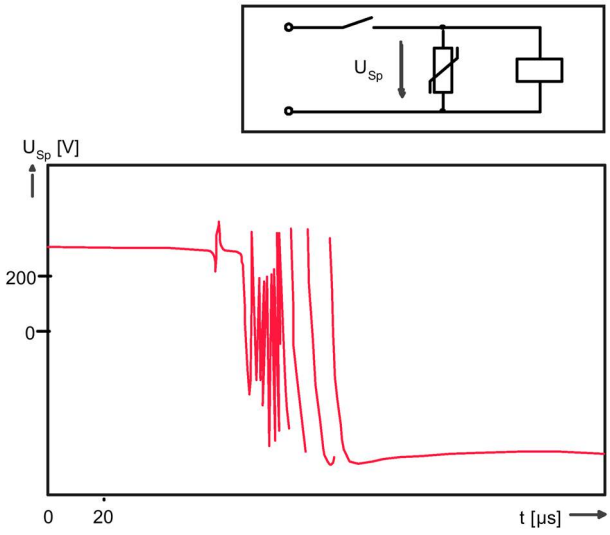

Figure 8-9 RC circuit with varistor (AC/DC operation)

Voltage peaks still occur. They are truncated at around 400 V and do not last as long overall (approximately 50 µs).

Note

Oscillogram is truncated; voltage drops to zero after approx. 3 ms.

RC circuit with RC element

RC elements are primarily used in the RC circuits of AC-operated contactors. They can also be used with DC-operated contactors. The increase in the effective capacitance at the coil reduces the amplitude to two to three times the control voltage, as well as the rate of rise of the switching overvoltage, so that shower discharges no longer occur. In this way, the RC circuit protects special *dv/dt*-sensitive output stages from unintentional connection.

Note

RC elements which have been selected correctly only have a minor influence on the contactors' switching times.

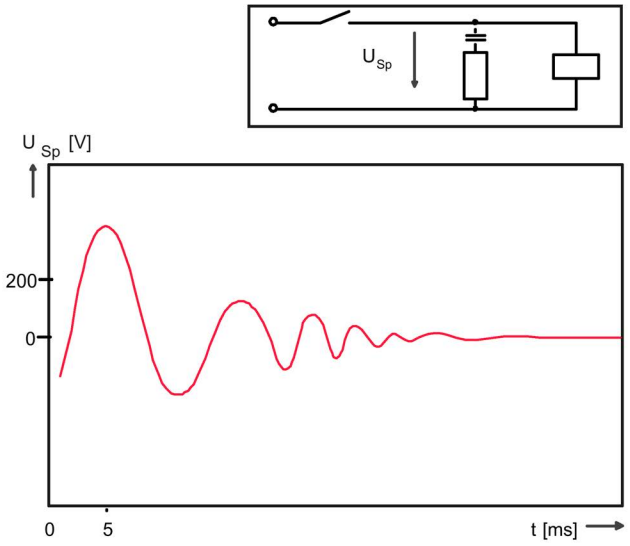

Figure 8-10 RC circuit with RC element (AC/DC operation)

The capacitor reduces the amplitude and the rate of rise of the switching overvoltage. Shower discharges no longer occur. The voltage briefly jumps to 400 V and then decreases gradually. This is the ideal type of attenuation. RC elements are suitable for AC and DC operation. Only a minimal OFF-delay arises.

Disadvantage: The component is larger and more expensive than other options.

RC circuit with suppression diode

Including a diode in an RC circuit ensures that switching overvoltages will no longer occur; the diode limits the voltage to 0.7 V.

Note

However, diodes extend the OFF delay (break time) by a factor of 6 to 9. This characteristic can be turned to the user's advantage if brief voltage dips in the range of a few milliseconds need to be bridged, for example. Freewheeling diodes are only technically useful for size S00 contactors. For higher power ratings we recommend an RC circuit with a diode combination.

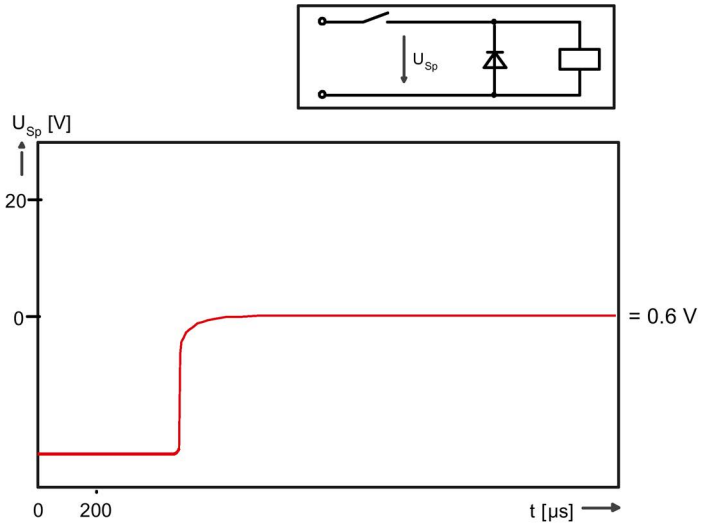

Figure 8-11 RC circuit with diode (DC operation)

Advantage: No overvoltages occur during the switch-off process. The diode blocks at 0.6 V.

Disadvantage: The diode can only be used for DC operation. The contactor's break time is extended considerably, amounting to 6 to 9 times the switch-off delay. This longer break time can be used for control purposes if required, e.g. to bridge short-time voltage dips.

Diode combinations are available for shorter break times.

RC circuit with a diode combination

Diode combinations comprise a diode and a Zener diode. They limit the maximum level of the overvoltage, as they become conductive above the breakdown voltage of the Zener diode. Unlike an RC element, diode combinations do not reduce the rate of the voltage rise.

Diode combinations can only be used for DC-operated contactors.

Note

The use of a diode combination does, however, extend the switch-off delay (the OFF time) by a factor of 2 to 6.

The diagram below shows the voltage characteristic for the contactor relay solenoid coil with an RC circuit from the graphic named "Disconnection of a contactor coil without RC circuit", with an appropriate diode combination.

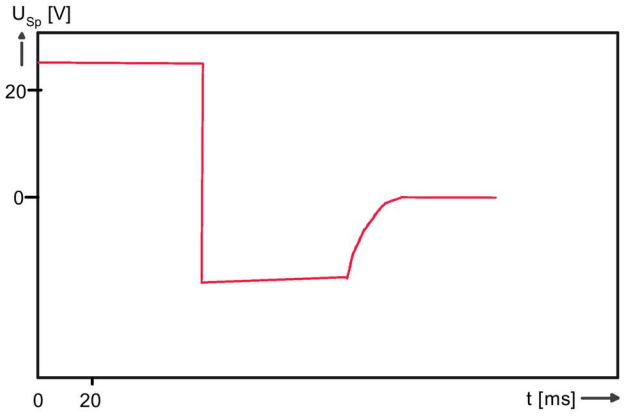

Figure 8-12 RC circuit with diode combination

RC circuit with a suppressor diode

If connected in parallel, suppressor diodes limit the maximum level of the overvoltage as they become conductive above a certain breakdown voltage. Unlike an RC element, suppressor diodes do not reduce the rate of the voltage rise. Suppressor diodes can be used for DC-operated contactors and AC-operated contactors and they influence the switching times only negligibly. In comparison to varistors, suppressor diodes have a shorter pick-up time.

The diagram below shows the voltage characteristic for the contactor relay solenoid coil with an RC circuit from the graphic named "Disconnection of a contactor coil without RC circuit", with an appropriate suppressor diode.

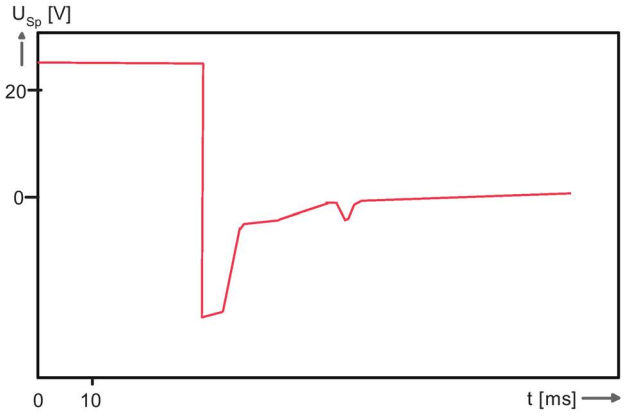

Figure 8-13 RC circuit with a suppressor diode

8.4.3 Mounting

Mounting a surge suppressor (size S00)

Mounting the surge suppressor (size S00)

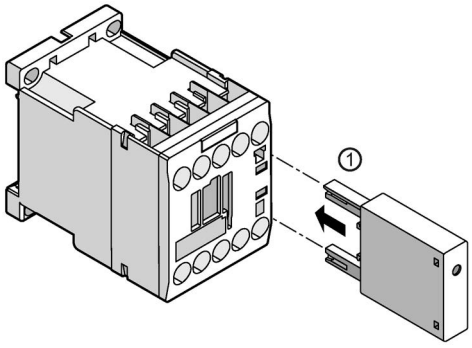

① Attach the surge suppressor onto the front of the contactor. Codes help you to identify which is the correct way up when inserting the device.

Note:
There is sufficient space to mount the surge suppressor next to a mounted auxiliary switch block.

Mounting a surge suppressor (sizes S0 to S2)

Mounting the surge suppressor with reference to size S0

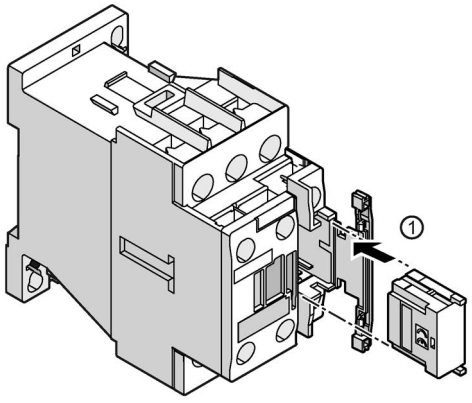

① Open the cover on the front panel of the contactor and push the surge suppressor into the opening until it engages.

Note

Mounting the surge suppressor (size S2)

On size S2, mount the surge suppressor in the same way as on size S0. Surge suppressors cannot be retrospectively mounted for capacitor contactors for S0.

Mounting the 3RT2936-1.... surge suppressor (size S3)

Mounting the 3RT2936-1.... surge suppressor

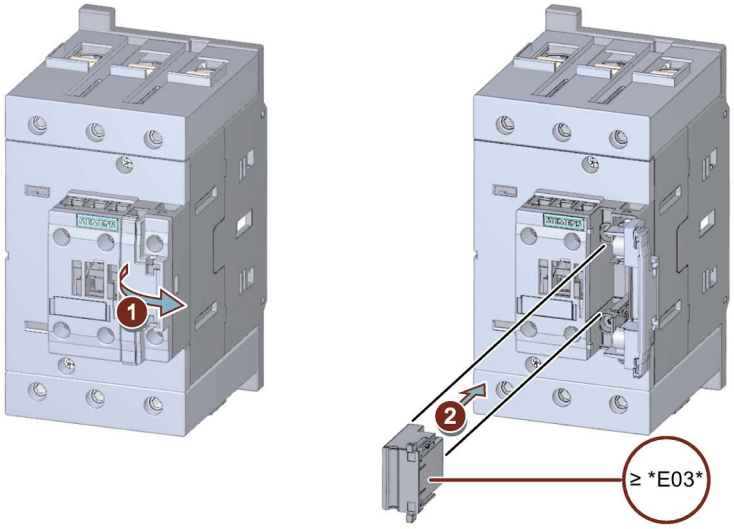

① Open the cover on the front panel of the
② Insert the surge suppressor (product version *E03* or higher) into the opening until it engages.
Close the cover on the front panel of the contactor.

Mounting the 3RT2946-1C.00 surge suppressor (size S3)

Mounting the 3RT2946-1C.00 surge suppressor with a fork-type cable lug on a contactor with screw-type connection system

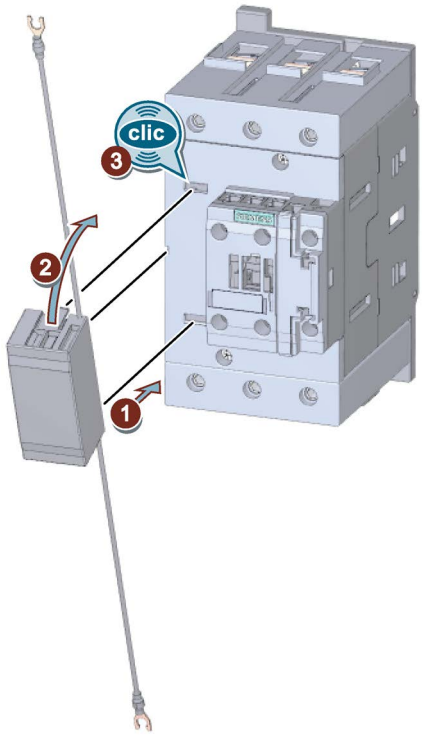

Place the underside of the surge suppressor onto the contactor.

②/③ Latch the upper side of the surge suppressor with the contactor.

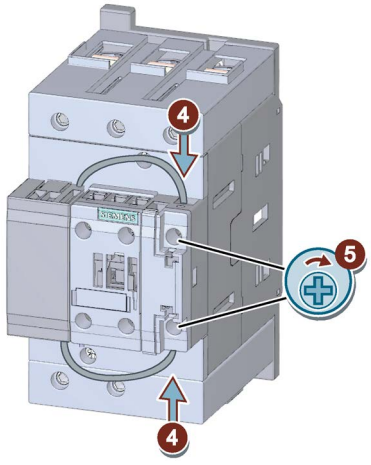

④/⑤ Thread the cables into coil terminals A1 and A2 of the contactor and screw them in place.

Mounting the 3RT2946-1C.00 surge suppressor with a fork-type cable lug on a contactor with spring-loaded connection system

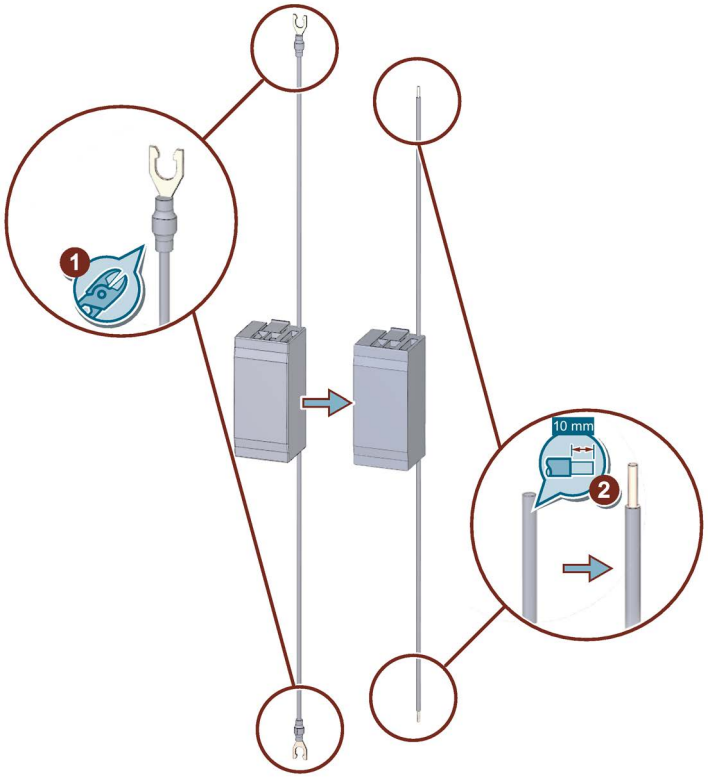

① Remove the fork-type cable lugs from the cables of the surge suppressor.
② Strip approx. 10 mm of insulation from the wires.

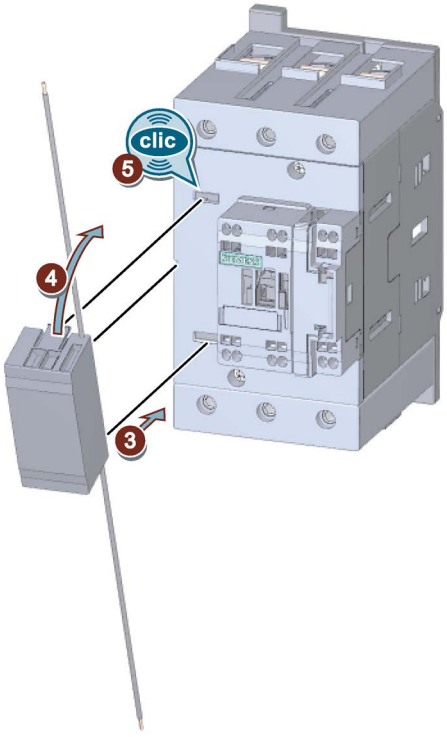

③ Place the underside of the surge suppressor onto the contactor.
④/⑤ Latch the upper side of the surge suppressor with the contactor.

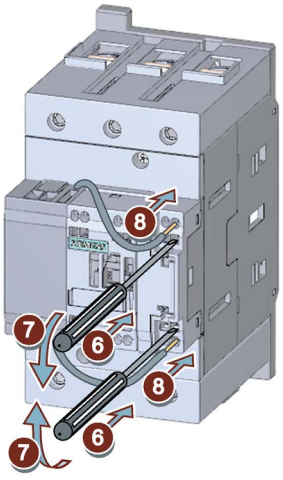

⑥/⑦ Insert a screwdriver into the spring-loaded connections and release them.
⑧ Insert the cables into the spring-loaded terminals.

Mounting a surge suppressor (sizes S6 - S12)

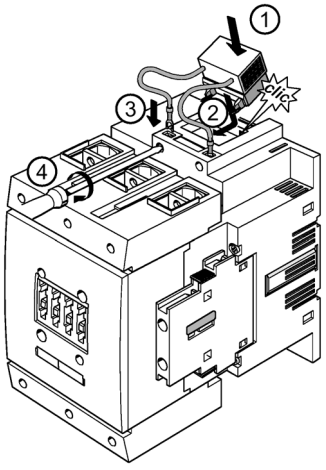

①/② Place the surge suppressor in position and latch it in place.
③ Insert the connecting cables into the terminal openings.
④ Screw the terminals in place.

8.5 EMC suppression module

8.5.1 Description

The EMC interference suppression module for size S00 contactors reduces the high-frequency components and the voltage level of a "counter-source voltage" in three phases. This results in the following advantages:

- **Reduction of arcing**:
  The connection between the main current path and the EMC suppression module enables arcing, which is responsible for contact erosion and the majority of clicking noises, to be reduced; this in turn ensures an EMC-compliant design.
- **Increased operational reliability**:
  Since the EMC suppression module achieves a significant reduction in radio-frequency components and the voltage level in three phases, the contact durability is extended considerably. This makes an important contribution towards enhancing the reliability and availability of the system as a whole.
- **Omission of fine graduation**:
  There is no need for fine graduations within each power class, as smaller motors inherently have a higher inductance, so that one solution is adequate for all fixed-speed operating mechanisms up to 5.5 kW.

Versions

Two electrical versions of the EMC suppression module are available.

Table 8- 20 Versions of the EMC suppression module

Design of the EMC suppression module	Article number
RC circuit	3RT2916-1PA
Varistor circuit	3RT2916-1PB

Circuit diagram

The diagram below shows an RC circuit with an RC element on the left, and an RC circuit with a varistor on the right.

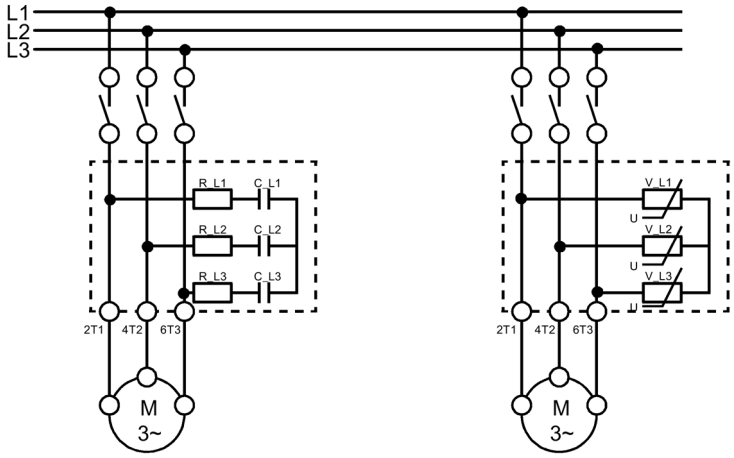

Figure 8-14 EMC suppression module, circuit diagram

8.5.2 Configuration

Selection aid

When motors or various inductive loads are disconnected, a counter-source voltage is generated. This can lead to voltage peaks of up to 4,000 V with a frequency spectrum from 1 kHz to 10 MHz and a rate of voltage variation from 0.1 to 20 V/ns.

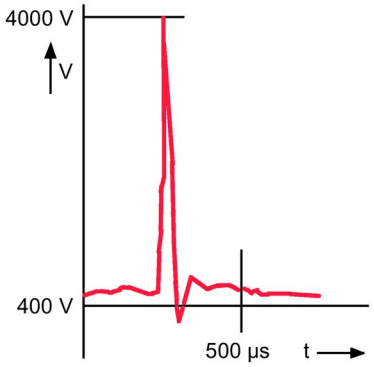

Figure 8-15 Counter-source voltage without RC circuit

Capacitive input to various analog and digital signals makes it necessary to suppress interference in the load circuit.

The EMC suppression module is available in two versions. The table below shows how the individual versions of the EMC suppression module differ.

Table 8- 21 Differences between versions of the EMC suppression module

EMC suppression module	Preferred application
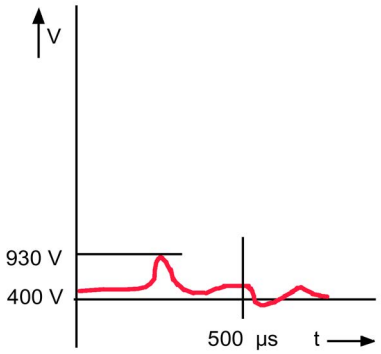 RC circuit	• For reducing the rate of rise • For RF attenuation The values have been selected such that effective interference suppression can be achieved across a broad spectrum.
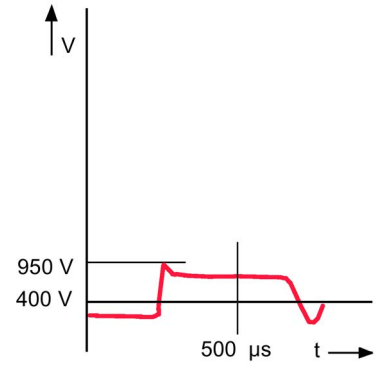 Varistor circuit	The varistor circuit can absorb a high level of energy and can be used for frequencies ranging from 10 to 400 Hz (controlled operating mechanisms). There is no limiting below the knee-point voltage.

8.5.3 Mounting

Mounting the EMC suppression module (size S00)

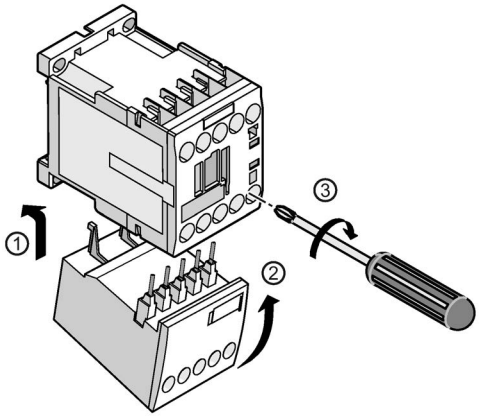

① Attach both hooks of the EMC suppression module onto the underside of the contactor.
② Tilt the EMC suppression module up until its pins are securely located in the contactor's terminal openings.
③ Screw the EMC suppression module tight with a screwdriver.

8.6 OFF-delay device

8.6.1 Description

The OFF-delay device prevents a contactor from dropping out unintentionally when there is a short-time voltage dip or voltage failure. The OFF-delay device supplies a downstream, DC-operated contactor with the necessary energy during a voltage dip, ensuring that the contactor does not drop out. The 3RT2916-. OFF-delay devices have been specially adapted to the 3RT contactors (sizes S00 to S3) and the 3RH21 contactor relays (size S00), and are available in the versions shown below.

Note

OFF-delay device requires DC contactor or an AC/DC contactor

The OFF-delay device can be controlled with AC or with DC. However, it always requires a DC contactor or an AC/DC contactor

Table 8- 22 Versions of the OFF-delay device

Control voltage of the OFF-delay device	Article number
24 V DC	3RT2916-2BE01
110 V AC/DC	3RT2916-2BK01
220/230 V AC/DC	3RT2916-2BL01

8.6.2 Configuration

The OFF-delay device operates without external voltage on a capacitive basis and can be energized with either AC or DC (24 V version for DC operation only). Voltage matching is only required for AC operation and is performed using a rectifier bridge.

A contactor opens after a delay when the capacitors integrated in the OFF-delay device are switched in parallel to the contactor's magnet coil. In the event of voltage failures, the capacitors discharge via the magnet coil, thus delaying opening of the contactor.

If the command devices are located upstream of the OFF-delay device in the circuit, the device will be activated with every opening operation. If the activation takes place downstream of the OFF-delay device, an OFF-delay only applies if the line voltage fails. The mean OFF-delay value is around 1.5 times the specified minimum time.

8.6.3 Mounting

The 3RT2916-. OFF-delay devices are available with the following mounting types:

- Screwing onto a mounting plate
- Snapping onto a 35 mm standard mounting rail according to EN 60715.

Mounting on mounting plate

The illustrations below depict screw mounting for sizes S00 to S3:

Screw mounting (sizes S00 to S3)

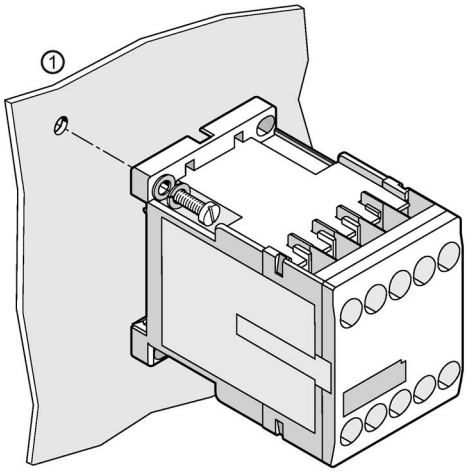

① Using two M4 screws (maximum tightening torque 1.2 to 1.6 Nm), plain washers, and spring washers, screw the OFF-delay device tight into the designated drill holes diagonally.

Snapping onto DIN rail (snap-on mounting)

Breaking delay devices of sizes S00 to S3 can be snapped onto a 35-mm standard mounting rail.

The illustrations below show how to snap OFF-delay devices onto/off a DIN rail:

Mounting / disassembling sizes S00 to S3 (snap-on mounting)

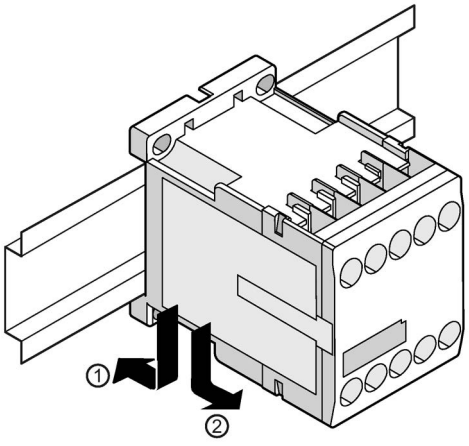

① Position the device on the top edge of the DIN rail and press down until it snaps onto the bottom edge of the DIN rail.

② To disassemble the device, press it down, pushing against the mounting springs, and swivel the device to remove it.

8.7 Mechanical latch

8.7.1 Description

The mechanical latch for the 3RT2.2 power contactors ensures that the contactor remains switched on even if there is a voltage failure. The release coil has an ON period of 100%.

Table 8- 23 Versions of the mechanical latch

Design of the mechanical latch	Article number
24 V AC/DC	3RT2926-3AB31
110 V AC/DC	3RT2926-3AF31
230 V AC/DC	3RT2926-3AP31

8.7.2 Mounting/Disassembly

Mounting the mechanical latch

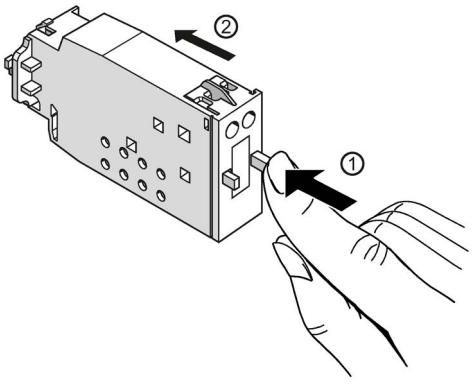

①/② When snapping on, the switch position indicator's rod must be unlocked. Unlock the rod by pressing on the switch position indicator and pushing the rod into the mechanical latch as far as it will go.

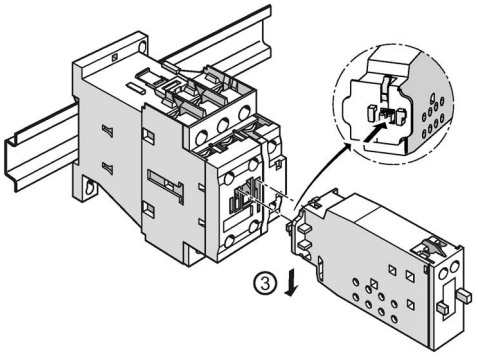

③ Snap the mechanical latch onto the center of the contactor until it engages.

Disassembling the mechanical latch

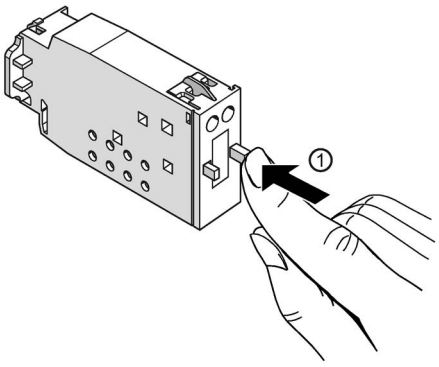

① Release the mechanical latch.

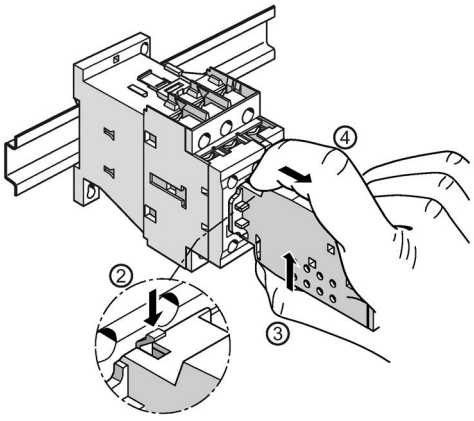

②/③ Release the mechanical latch.
④ Take the mechanical latch off the contactor.

8.7.3 Operation

The mechanical latch can be operated with alternating and direct current; it can be activated and deactivated electrically and manually. The illustrations below show how to operate the mechanical latch manually.

Electrical release is achieved by applying the voltage to terminals E1 and E2 of the mechanical latch.

Table 8- 24 Operating the mechanical latch

Step	Operating instruction	Image
1	To activate the latch, press the left plunger.	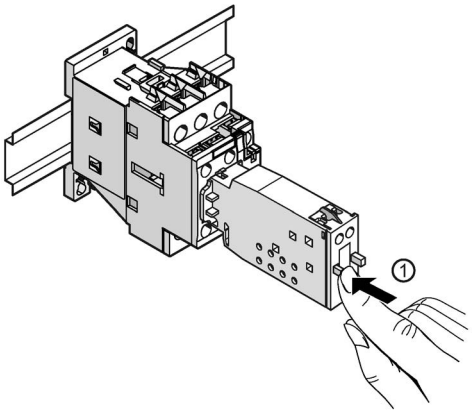
2	To deactivate it, press the right plunger. It can only be unlocked if the contactor coil is not excited.	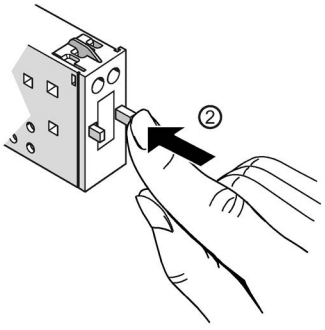

8.8 Additional load module

8.8.1 Description

The 3RT2916-1GA00 additional load module for size S00 contactors is used to increase the permissible residual current and to limit the residual voltage of SIMATIC semiconductor outputs.

If SIRIUS contactors and SIRIUS contactor relays of size S00 are used in conjunction with SIMATIC output modules whose residual current on signal "0" is higher than that which is permissible for size S00 contactors, this can sometimes result in malfunctions. The maximum permissible residual current of the electronics for size S00 contactors with a 230 V AC drive is 3 mA; at higher residual currents the contactors will not drop out. The additional load module is used to ensure that size S00 contactors which are directly controlled via 230 V AC semiconductor outputs are disconnected safely by programmable logic controllers. The additional load module also performs the function of an overvoltage attenuation circuit.

Technical data

Rated voltage	AC 50/60 Hz 180 V to 255 V
Power loss	2.4 W at 230 V
Permissible contactor types	3RT2.1 (size S00)

8.8.2 Mounting

The 3RT2916-1GA00 additional load module is connected in parallel with the contactor coil. Its design is identical to that of the surge suppressor and it is attached to the front of the contactor, with or without an auxiliary switch block.

Reference

More information ...	Can be found in the chapter titled ...
About mounting the additional load module	Surge suppressor (Page 264)

8.9 Control kit for manual operation of contactor contacts

8.9.1 Description

The control kit is a tool used for manual operation (closing) of the auxiliary contacts of the 3RT20 power contactors and the main contacts (load-free switching) during commissioning. This way, for example, the auxiliary contact circuit or also a high-voltage test for commissioning can be carried out even without a fully configured control circuit.
The following control kits are available for the different sizes:

- S00: 3RT2916-4MC00 (color: yellow): Use on front connection point
- S0: 3RT2926-4MC00 (color: orange): Use on front connection point
- S2 / S3 3RT2936-4MC00 (color: yellow): Use in the slot of the surge suppressor

The module is used to check the wiring and the motor direction of rotation under conditions of short-circuit protection. The control kit also enables simple and user-friendly use and support for high-voltage tests according to IEC 60294.

8.9.2 Mounting

NOTICE
The contactor and the connected loads can be damaged.
Disconnect the contactor from the power supply before you attach or remove the control kit.
Only use the control kit for test purposes during commissioning.

Mounting the control kit on a contactor (S00)

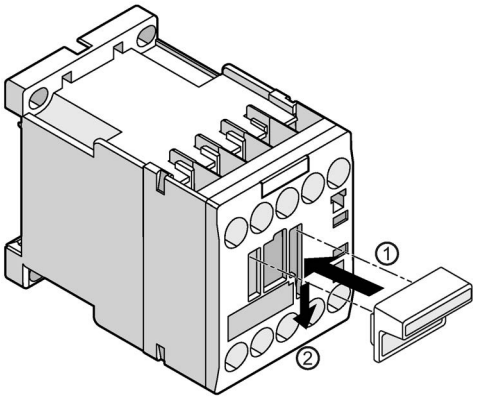

① Attach the control kit to the contactor from the front.
② Press the control kit down until it engages.

Mounting the control kit on a contactor (S0)

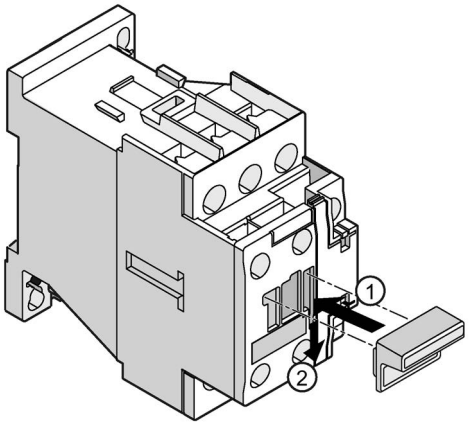

① Attach the control kit to the contactor from the front.
② Press the control kit down until it engages.

Mounting the control kit on a contactor (S2/S3)

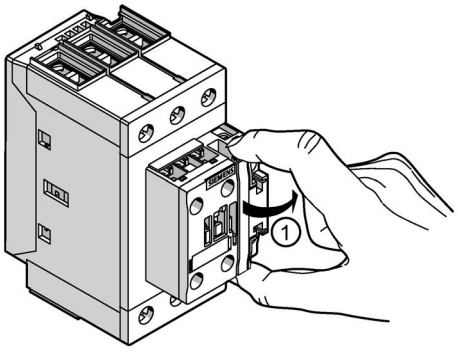

① Open the contactor cover.

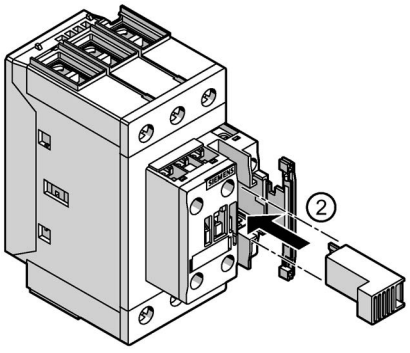

② Attach the control kit to the contactor from the front.
Press the control kit down until it engages.

8.10 Coupling link for PLC

8.10.1 Description

Thanks to a low control power (< 0.5 W) and an operating range of 17 to 30 V DC, the coupling link enables a size S0 contactor with a 24 V DC operating mechanism to be connected directly to the PLC output. The control voltage for the coupling link and the rated control supply voltage for the contactor are galvanically isolated. An LED indicates the switching state of the coupling link. The coupling link features an integrated surge suppressor (varistor) for the contactor coil being switched.

The coupling link is available in the following versions:

- 3RH2914-.GP11: Can be mounted onto the front on 3RT2 contactors (size S00 to S3); spring-loaded connection or screw-type connection
- 3RH2924-1GP11: Can be mounted from above on 3RT2 contactors (size S0) without increasing the installation depth; screw-type connection; comprises 3RT2926-4RA11 coil terminal module and coupling link

Note

The 3RH2914-1GP11 coupling link is also suitable for front-mounting on 3RH2 contactor relays (size S00).

Scope of supply

The following components ship with the 3RH2914-1GP11 coupling link:

- Coupling link
- 3RT2926-4RA11 coil terminal module with coil terminal from above (screw-type connection system)

The following components ship with the 3RH2926-1AP11/12 coupling module:

- Coupling link

Circuit diagram

3RH2914-.GP11 coupling link for control from the PLC.

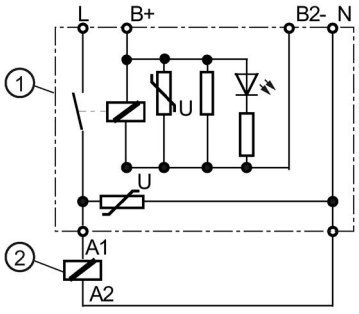

1	Coupling link
2	Contactor
B1+/B2-	Control voltage 24 V DC
L1/N	Rated control supply voltage for the selected contactor

Figure 8-16 Coupling link, circuit diagram (size S0)

3RH2914-.GP11 coupling link (screw-type/spring-loaded) for control from the PLC.

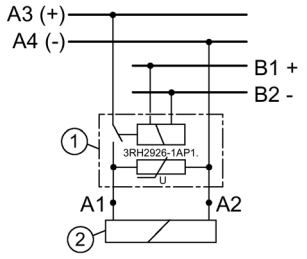

①	Coupling module
②	Contactor (Q1)
A3 (+)/A4 (-)	U_S (Q1)
B1 +/B2 -	Control voltage 24 V DC

Figure 8-17 Coupling link, circuit diagram (sizes S00, S0 and S2)

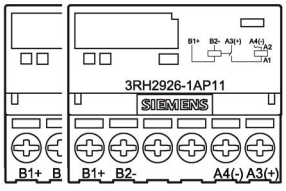

Figure 8-18 Terminals on the 3RH2914-.GP11 . coupling link

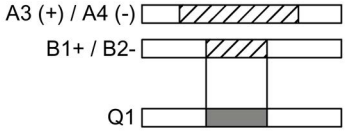

Figure 8-19 Connecting the 3RH2914-.GP11 coupling link

8.10.2 Mounting the 3RH2924-1GP11 coupling link

Prerequisite

The 3RT2926-4R..... coil terminal module must be mounted before you can attach the coupling link.

NOTICE
Before mounting the coupling link, disconnect the voltage from L1 to L3.

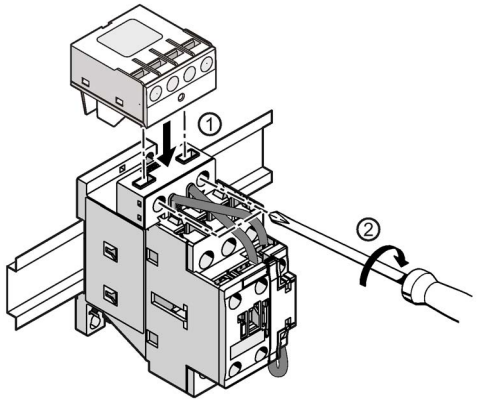

① Attach the coupling link to the coil terminal module using the two integrated mounting pins.
② Screw the coupling link tight with a screwdriver.

8.10.3 Mounting and disassembling the 3RH2926-1AP1 coupling module

Mounting

Replacing the removable terminal block

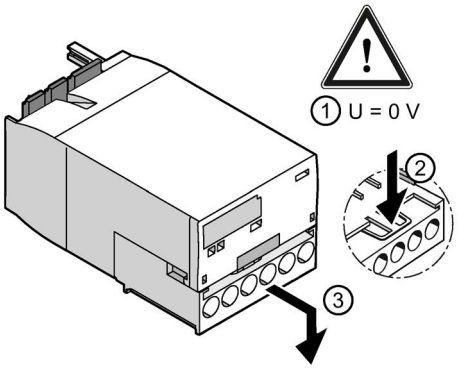

① Detach the terminal block:

- Press the lug of the terminal block downwards.
- Pull the terminal block out to the front and then downwards.

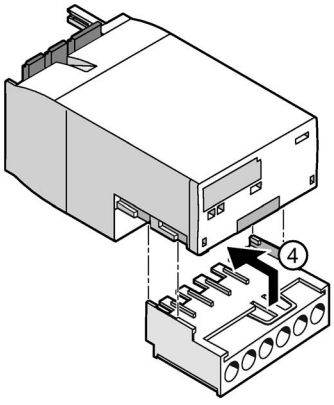

② Install the terminal block:

- Plug the terminal block onto the coupling module from below.
- Slide the terminal block back until the lug engages.

Mounting the 3RH2926-1AP1 coupling module

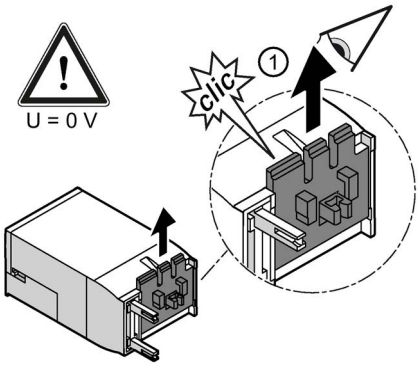

① Pull the rear cover up until it engages.

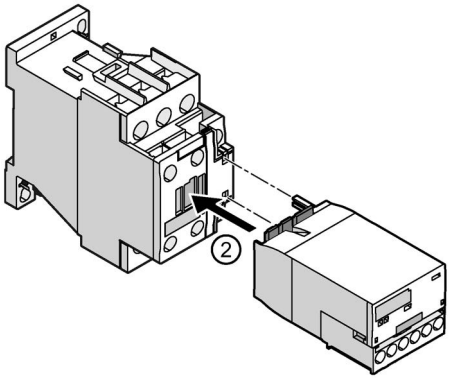

② Attach the coupling module to the coil terminal module using the integrated mounting pins at the front.

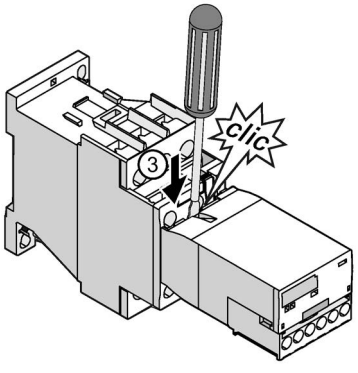

③ Use a screwdriver to press down the cover of the coupling module until it engages.

Disassembling

Disassembling using the example of the 3RH2926-1AP1 coupling module.

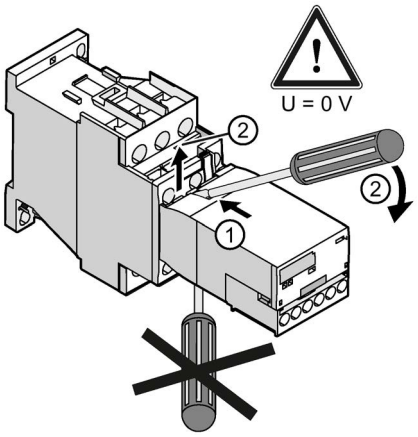

① Apply the screwdriver from above.
② With the aid of the screwdriver, pull the rear cover plate of the coupling module upwards.

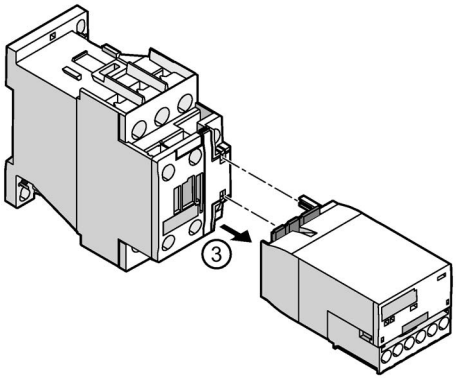

③ Pull the coupling module with the integrated mounting pins towards you off the coil terminal module.

8.11 LED display indicator module

8.11.1 Description

The LED display module can be connected to the coil terminals of size S00 to S3 contactors; it indicates the energized state of the contactors via yellow LEDs. In practice the LED display indicator module is primarily used for 3RT2 power contactors in size S0.

Table 8- 25 LED display indicator module

Size	Article number
S00 / S0 / S2 / S3	3RT2926-1QT00

The LED display module can be used for voltages of 24 to 240 V AC/DC. The LEDs are switched on a bidirectional basis to prevent polarity reversal. With AC control both LEDs light up and with DC control just one LED lights up, depending on the polarity.

8.11.2 Mounting

Mounting the LED display module with reference to size S0

The LED display module is snapped into the location hole on the front of the contactor in place of the labeling plate.

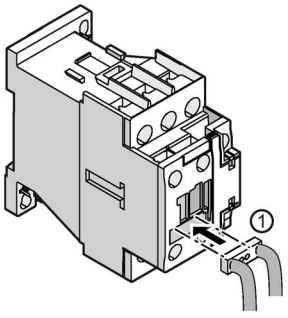

① Snap the LED display indicator module into the corresponding location hole provided on the front of the contactor.

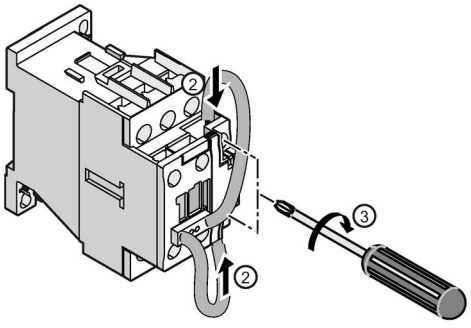

② Thread the cables into coil terminals A1 and A2 of the contactor.

③ Screw the cables tight with a screwdriver.

Note

For size S2 / S3, mount the LED display indicator module in the same way.

8.12 Solder pin adapter

8.12.1 Description

The solder pin adapter can be used to solder standard contactors in size S00 up to 5.5 kW/12 A onto PCBs.

Table 8- 26 Versions of the solder pin connection

Version of the solder pin connection	Article number
Without auxiliary switch block	3RT1916-4KA1
With auxiliary switch block	3RT1916-4KA2

Solder pin connection can be used:

- For motor contactors and contactor relays in size S00.
- For contactors in size S00 with an attached 4-pole auxiliary switch block.
- For the reversing wiring of S00 contactors; in this case, the reversing wiring must be carried out before the contactors are soldered onto the PCB.

8.12.2 Mounting

Mounting on a contactor of size S00

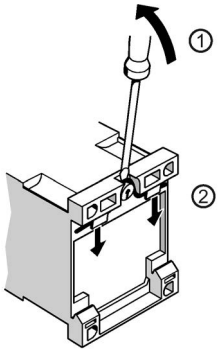

① Position the screwdriver on the contactor as shown in the figure.
② Press the screwdriver to the rear to release the spring for standard rail mounting.

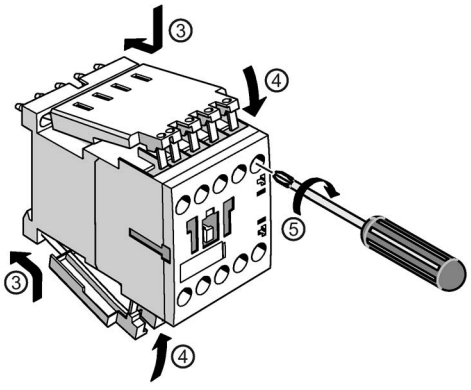

③ Insert the solder pin connections into the screw connections at the top and bottom of the contactor.
④ Fold the solder pin adapters onto the contactor.
⑤ Screw the adapters tight with a screwdriver.

Mounting on a contactor of size S00 with an attached 4-pole auxiliary switch block

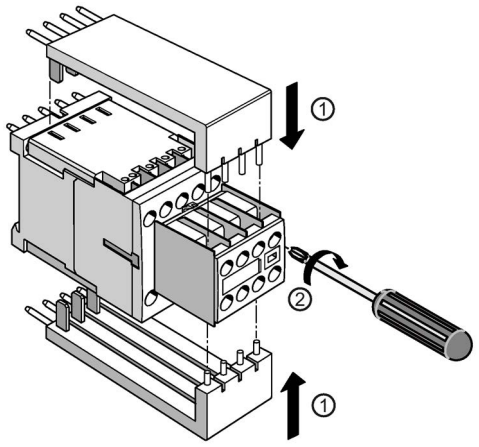

① Insert the solder pin connections into the openings provided at the top and bottom of the contactor until they engage.

② Screw the solder pin adapters tight with a screwdriver.

8.13 Coil terminal module

8.13.1 Description

The 3RT2926-4R. coil terminal module for mounting on 3RT20 power contactors in size S0 serves as an adapter for the coil and ensures the coil wiring is correct for 3RT102 contactors (e.g. for retrofitting a 3RT10 device).

The following versions of the coil terminal module are available (only screw connection available for sizes S2 / S3).

Table 8- 27 Versions of the coil terminal module

Connection system	Design of the coil terminal module	Article number
Screw connection	Coil terminal from above	3RT2926-4RA11
	Coil terminal from below	3RT2926-4RB11
	Coil terminal diagonal	3RT2926-4RC11
Spring-loaded connection[1)]	Coil terminal from above	3RT2926-4RA12
	Coil terminal from below	3RT2926-4RB12

[1)] For size S0 only.

8.13.2 Mounting

Mounting the coil connection module using the example of size S0 contactors

Below is an example of how to mount the 3RT2926-4RA11 coil terminal module (coil terminal from above) onto a 3RT2 power contactor of size S0.

Sizes S2 / S3 are mounted in the same way.

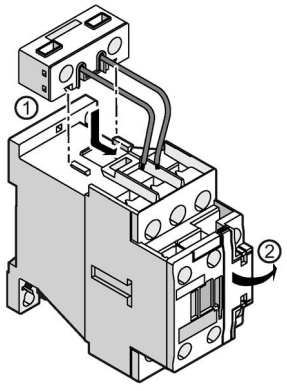

① Attach the coil terminal module onto the contactor from above until it engages.
② Open the cover on the front panel of the contactor.

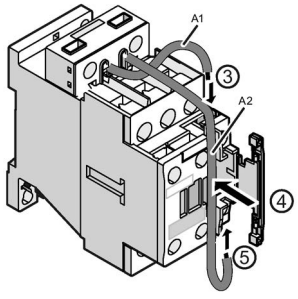

③ Thread the cables from above into coil terminal A1 of the contactor.
④ Insert the cable into the cable channel.
⑤ Thread the cables from below into coil terminal A2 of the contactor.

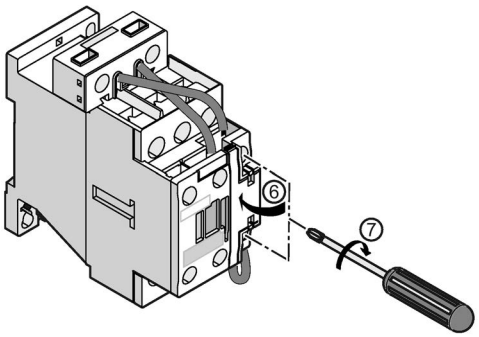

⑥ Close the cover on the front panel of the contactor.
⑦ Screw the cables tight with a screwdriver.

8.14 Cover for ring cable lug

8.14.1 Description

For the version with a ring cable lug connection system the SIRIUS modular system features attachable cover caps for ensuring touch protection (finger safety) according to IEC 61140. Both line-side and output-side covers are available.

Table 8- 28 Versions of the cover for the ring cable lug

Size	Article number
S00	3RT2916-4EA13
S0	3RT2926-4EB13

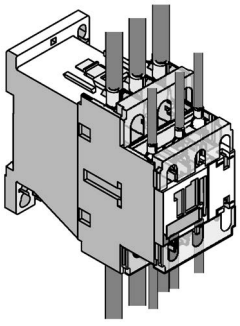

Figure 8-20 3RT2 power contactor with ring cable lug cover (size S0)

8.15 Sealable cover

8.15.1 Description

When contactors and contactor relays are used in safety-oriented applications, it must be ensured that the contactors cannot be operated manually. A sealable cover 3RT1926-4MA10 (sizes S6 to S12) and 3RT2916-4MA10 (sizes S00 to S3) that prevents unintentional manual operation of the contactors is available as an accessory for this application. It is a transparent molded-plastic cap with a clip that enables the contactor to be sealed.

8.15.2 Mounting

Mounting the sealable cover on the size S00 contactor

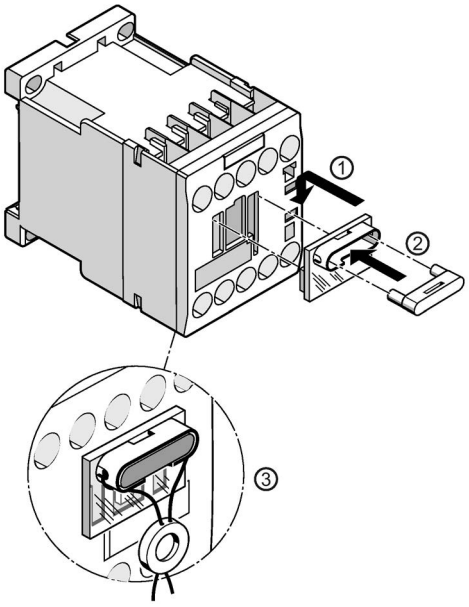

① Attach the loose molded-plastic cap into the location hole on the contactor.
② Insert the clip into the molded-plastic cap.
③ Use a seal to secure the clip so that the molded-plastic cap cannot be removed.

Note

Proceed in the same way to mount the sealable cover on contactors of sizes S0 to S12.

8.16 3-phase infeed terminal

8.16.1 Description

The 3-phase infeed terminal is used for infeed in the case of large conductor cross-sections. The terminal is available for mounting on 3RT20 power contactors in sizes S00, S0 and S2 with screw-type connection systems.

Table 8- 29 Versions of the 3-phase infeed terminal

Size	Article number
S00	3RA2913-3K
S0	3RV2925-5AB
S2	3RV2935-5A
S2	3RV2935-5E Terminal for increased clearances and creepage distances

8.16.2 Mounting

Mounting the 3-phase infeed terminal (size S00)

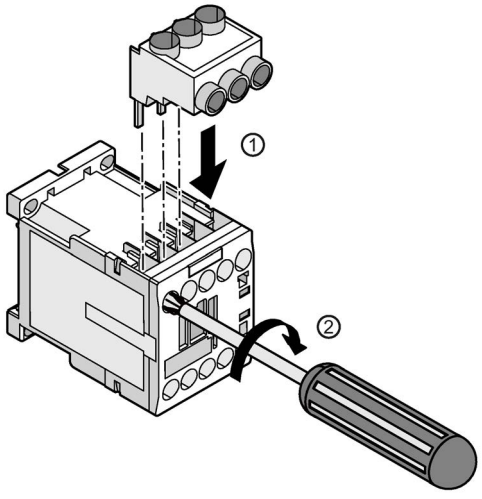

① Insert the pins of the 3-phase infeed terminal into the contactor's terminal openings from above until they are securely in position.

② Screw the 3-phase infeed terminal tight with a screwdriver.

Note

Proceed in the same way to mount the 3-phase infeed terminal on 3RT20 contactors of size S0. With capacitor contactors, size S0 and S2 3-phase infeed terminals can be supplemented for connecting larger conductors.

8.17 1-phase infeed terminal

8.17.1 Description

The 1-phase infeed terminal is used for infeed in the case of large conductor cross-sections. You require three 1-phase infeed terminals. The terminal is available for mounting on 3RT20 power contactors in size S3 with screw-type connection.

Table 8- 30 Versions of the 1-phase infeed terminal

Size	Article number
S3	3RA2943-3L

8.17.2 Mounting

Mounting the 1-phase infeed terminal (size S3)

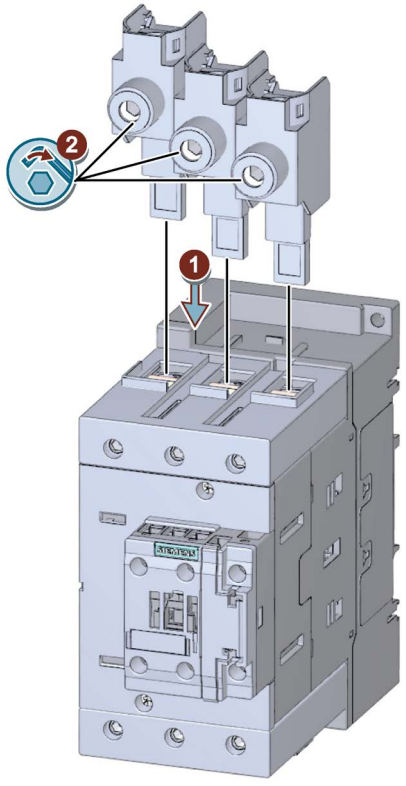

① Insert the pins of the 1-phase infeed terminal into the contactor's terminal openings from above until they are securely in position.

② Screw the 1-phase infeed terminal tight with a screwdriver.

8.18 Parallel switching connectors

8.18.1 Description

The parallel connection is used for parallel infeed of an L1 cable on L1 - L3. The parallel connectors (insulated) can be reduced by one pole.

The following versions of parallel switching connections are available:

Table 8- 31 Versions of the parallel switching connectors

Size	Design of the parallel switching connector	Connection system	Article number
S00	3-pole, without connection terminal	Screw connection	3RT1916-4BA31
		Spring-loaded connection	3RT2916-4BA32
	3-pole, with connection terminal	Screw connection	3RT1916-4BB31
	4-pole, with connection terminal	Screw connection	3RT1916-4BB41
S0	3-pole, without connection terminal	Screw connection	3RT1926-4BA31
		Spring-loaded connection	3RT2926-4BA32
	3-pole, with connection terminal	Screw connection	3RT2926-4BB31
S2	3-pole, with connection terminal	Screw connection	3RT1936-4BB31
S3	3-pole, without terminal	Screw connection	3RT1946-4BB31
S6	3-pole, without terminal, with through hole for contactors	Screw connection	3RT1956-4BA31
S10 / S12	3-pole, without terminal, with through hole for contactors	Screw connection	3RT1966-4BA31

8.18.2 Configuration

If the current paths of multi-pole switching devices are connected in parallel, the total current is distributed across the individual current paths in accordance with their ohmic resistance and their inductive interactions. The ohmic resistance is primarily generated by the contact resistance at the contacts, the value of which can vary as a result of erosion and oxidation. This means that the current distribution is neither even nor stable: Individual current paths may be overloaded and the overload releases or relays will trip too early (tripping error).

Permanent load with parallel connection

Provided that the relevant catalogs do not contain any information to the contrary, the following applies for a permanent load with parallel connection:

- If three current paths are connected in parallel, 2.5 times the continuous current can be conducted; if two current paths are connected in parallel, 1.8 times the continuous current can be conducted. However, it should be noted that the making and breaking capacities do not increase, since the contacts do not close and open simultaneously, so the contacts of one current path have to switch the entire inrush or breaking current.
- The cables should be routed such that the same cable lengths are used for each current path.
- If a short-circuit current arises, it is divided up in accordance with the ratio of the current path resistances.
  Notice: The operating current of electromagnetic instantaneous short-circuit releases cannot be reached in such cases.

Making capacity/breaking capacity

The table below specifies the magnitude of a contactor's making and breaking capacities, in relation to the load currents for two or three current paths connected in parallel:

Table 8- 32 Parallel switching connections: Making capacity/breaking capacity

	3-pole switching	2 current paths in parallel	3 current paths in parallel	4 current paths in parallel
	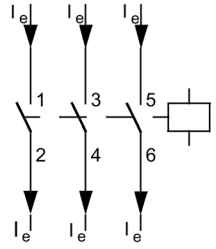	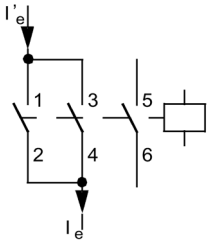	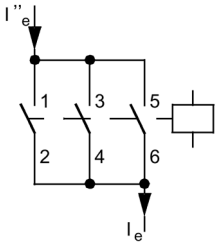	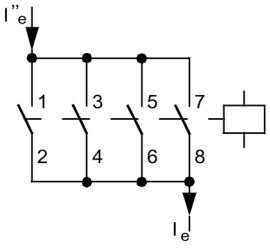
Making capacity	12 x I_e (utilization category AC-4)	$\frac{12 \cdot I'e}{1.8} = 6.67 \cdot I'e$	$\frac{12 \cdot I''e}{2.5} = 4.8 \cdot I''e$	$\frac{12 \cdot I''e}{3.1} = 3.9 \cdot I''e$
Breaking capacity	10 x I_e (utilization category AC-4)	$\frac{10 \cdot I'e}{1.8} = 5.55 \cdot I'e$	$\frac{10 \cdot I''e}{2.5} = 4.0 \cdot I''e$	$\frac{10 \cdot I''e}{3.1} = 3.2 \cdot I''e$

8.18.3 Mounting

The parallel connectors of size S00 and S3 can all be reduced by one pole. The illustration below shows an example of how to mount the 3-pole parallel switching connector with connection terminal to a contactor of size S00.

Mounting the 3-pole parallel switching connector with connection terminals

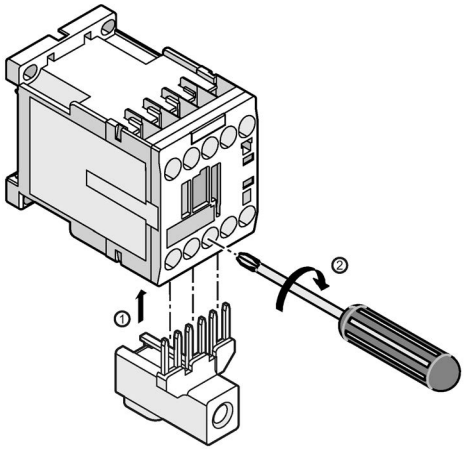

① Insert the pins of the parallel switching connector into the contactor's terminal openings from below until they are securely in position.

② Screw the parallel switching connector tight with a screwdriver.

8.19 Link module for two contactors in series

8.19.1 Description

The link module for 2 contactors in series is a module used to connect two contactors in series. It is used in Safety applications, for example, where two switching points located in series are required.

The link module for 2 contactors in series is available in the following versions.

Table 8- 33 Versions of the link module

Size	Article number
S00	3RA2916-1A
S0	3RA2926-1A
S2	3RA2936-1A

8.19.2 Mounting

Mounting the link module for 2 contactors in series (size S00)

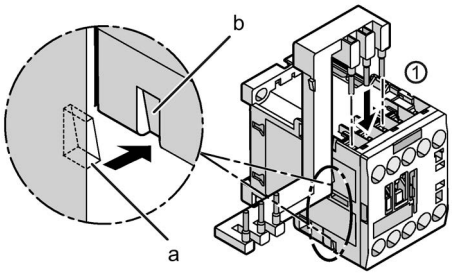

① Insert the pins of the link module into the contactor's terminal openings from above until they are securely in position. Make sure that the wedge (a) engages in the groove (b) provided on the contactor for this purpose.

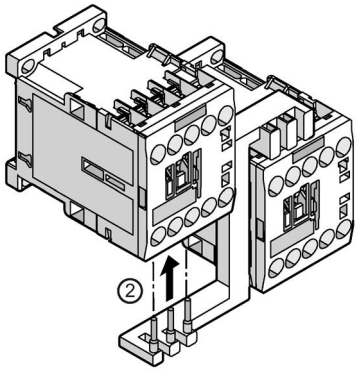

② Attach the contactor onto the link module's pins from above.

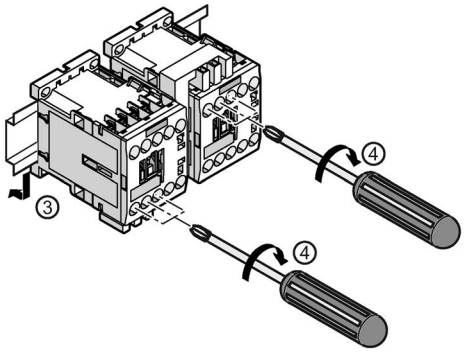

③ Position the contactors connected in series via the link module on the top edge of the DIN rail and press them down until they snap onto the bottom edge of the DIN rail.

④ Screw the link module tight on both contactors with a screwdriver.

Note

The procedure is the same for size S0 and S2 contactors.

8.20 Link module for motor starter protector

8.20.1 Description

Link module for motor starter protector - contactor

Link modules can be used to quickly and reliably mount a motor starter protector onto the contactor. In this case, the link modules serve to establish an electrical and mechanical connection between the motor starter protector and the contactor.

Table 8- 34 Versions of the link module for motor starter protector - contactor

Connection system	Version of the link module	Article number
Screw-type	Motor starter protector – contactor in size S00	3RA1921-1DA00
	Motor starter protector – contactor in size S0 AC	3RA2921-1AA00
	Motor starter protector – contactor in size S0 DC	3RA2921-1BA00
	Motor starter protector – contactor in size S2	3RA2931-1AA00
	Motor starter protector – contactor in size S3	3RA1941-1AA00
Spring-loaded	Motor starter protector – contactor in size S00	3RA2911-2AA00
	Motor starter protector – contactor in size S0	3RA2921-2AA00

Reference

More information ...	Can be found in the appendix ...
About link modules	"List of references" under "Manuals - SIRIUS Modular System (Page 463)" in the "SIRIUS - SIRIUS 3RA load feeders" manual.
About mounting contactors and motor starter protectors	

8.21 Pneumatically delayed auxiliary switch

8.21.1 Description

In terms of its function, the pneumatically delayed auxiliary switch is comparable with solid-state time-delayed auxiliary switch blocks. It is available for 3RT2.2 (size S0) power contactors in the following versions.

Table 8- 35 Versions of the pneumatically delayed auxiliary switch

Version	Adjustable time range	Article number	Circuit diagrams
ON-delay	0.1 to 30 s	3RT2926-2PA01	
	1 to 60 s	3RT2926-2PA11	
With OFF-delay	0.1 to 30 s	3RT2926-2PR01	
	1 to 60 s	3RT2926-2PR11	

The pneumatically delayed auxiliary switch block is used if electronic components are not desirable or in the absence of a control supply voltage.

8.21.2 Mounting/Disassembly

Versions of the pneumatically delayed auxiliary switch

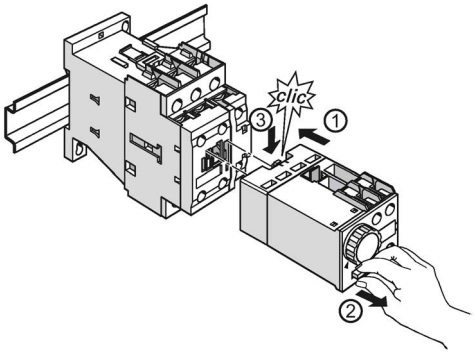

① Push the pneumatically delayed auxiliary switch, which is attached on the front, into the location hole on the contactor.
② Pull the plunger out.
③ Pull the pneumatically delayed auxiliary switch down until it engages.

Note

The pneumatically delayed auxiliary switch is attached on the front of the contactors and features 1 NO contact and 1 NC contact as its auxiliary contacts. If the pneumatically delayed auxiliary switch is mounted on a contactor, no other auxiliary contacts are permitted.

Disassembling the pneumatically delayed auxiliary switch

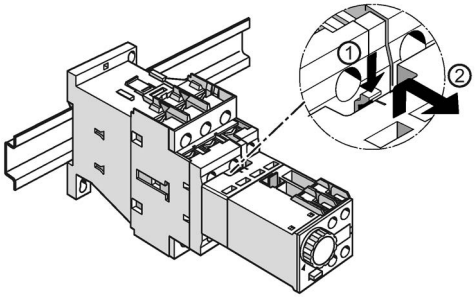

① Press down the release lever on the pneumatically delayed auxiliary switch.
② Pull the pneumatically delayed auxiliary switch toward you and remove it from the contactor.

8.21.3 Operation

Table 8- 36 Operating the pneumatically delayed auxiliary switch

Step	Instructions	Figure
1	Set the required time range.	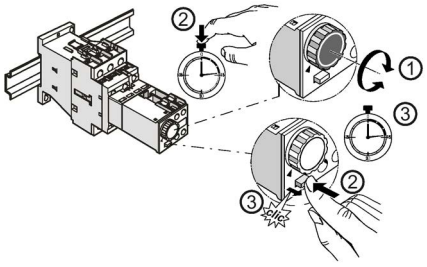
2	Press the plunger to start the pneumatically delayed auxiliary switch.	
3	Once the set time has elapsed, the plunger will snap back out.	

8.22 Insulating stop

8.22.1 Description

The insulating stop is available in the following versions.

Table 8- 37 Versions of the insulating stop

Size	Article number	Can be used for
S00	3RT2916-4JA02	Basic units 3RT2.1 and 3RH21
S0/S2	3RT1916-4JA02	• Terminals for the auxiliary circuit and the control circuit of a 3RT2.2 / 3RT2.3 basic unit • Auxiliary switch blocks which can be mounted on the front and side

The insulating stop is for contactors with spring-loaded connections. In the case of conductors with a small conductor cross-section (≤ 1mm²), it ensures that the conductor insulation is not clamped with the rest of the cable. An insulating stop unit comprises 5 pairs of terminals which can be separated. The diagram below illustrates an example of how the the 3RT2916-4JA02 insulating stop can be used on a size S00 basic device.

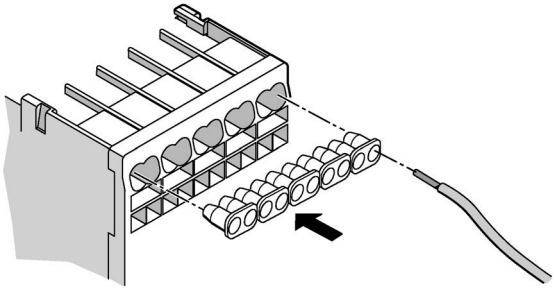

Figure 8-21 Insulating stop on spring-loaded connection

8.23 Terminal module for contactors with screw connections

8.23.1 Description

The terminal module for contactors with screw connections is available in the following versions.

Table 8- 38 Versions of the terminal module for contactors with screw connections

Size	Article number	Version
S00 and S0	3RT1900-4RE01	Plug for contactor
S00	3RT1916-4RD01	Adapter for contactor
S0	3RT1926-4RD01	Adapter for contactor

The terminal module can be used to connect contactors with screw connections in size S00 or S0 to a motor.

8.23.2 Mounting

Mounting the terminal module for contactors with screw connections

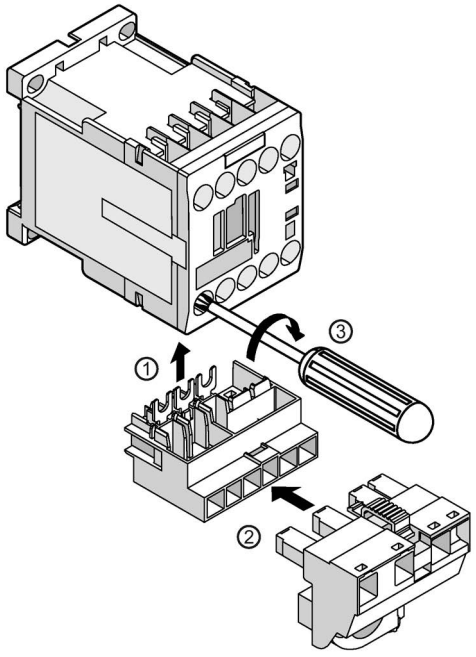

① Plug the adapter pin into the contactor from below.
② Insert the plug into the openings on the adapter from the front, until it engages.
③ Screw the terminal module tight with a screwdriver.

Note

Proceed in the same way to mount the terminal module on size S0 contactors.

Note

Replace the contactor and the adapter together when end of service life is reached.

8.24 3RA27 function modules for connection to the automation level (AS-Interface or IO-Link)

8.24.1 Description

Special SIRIUS 3RT2 contactor versions with voltage tapping (3RT2...-....-0CC0) are required to simply connect SIRIUS switching devices to the controller level (PLC) using 3RA27 function modules.
The function modules enable connection to the AS-Interface or IO-Link communication solutions.

The function modules are available for the following contactors and contactor assemblies.

Table 8- 39 Overview - 3RA27 function modules

	AS-Interface	IO-Link
Direct-on-line start	3RA2712- . AA00	3RA2711- . AA00
Reversing start	3RA2712- . BA00	3RA2711- . BA00
Star-delta (wye-delta) start	3RA2712- . CA00	3RA2711- . CA00

Note

No further auxiliary switch blocks may be mounted on the basic devices when using the 3RA27 function modules.

Note

Sizes S00 to S3

Sizes S00 to S3 use the same function modules.

Reference

More information ...	Can be found in the manuals ...
About the 3RA27 function modules for connection to the automation level	• "Function Modules for AS-Interface" (http://support.automation.siemens.com/WW/view/en/39318922) (3ZX1012-0RA27-0AC0) • "Function Modules for IO-Link" (http://support.automation.siemens.com/WW/view/en/39319600) (3ZX1012-0RA27-1AC1)

8.25 3RA28 function modules for mounting on 3RT2 contactors

8.25.1 Description

The SIRIUS modular system features 3RA28 function modules for the delayed switching of contactors and auxiliary switches (e.g. for switching from star operation to delta operation).

3RA28 function modules are available with screw-type or spring-loaded connections in the following versions:

- Solid-state time-delay auxiliary switches 3RA281.-..W10
  With ON-delay or OFF-delay, without auxiliary voltage
- Solid-state timing relays with semiconductor output 3RA2811-.CW10 and 3RA2812-.DW10
  With ON-delay or OFF-delay, with auxiliary voltage
- Star-delta (wye-delta) function module 3RA2816-0EW20
  Complete module kit for star-delta (wye-delta) start

Note

No further auxiliary switch blocks may be mounted on the basic devices when using the 3RA28 function modules.

Note

When using the 3RA2816-0EW20 function module for star-delta (wye-delta) start, the following exception applies:

No more than one 3RH29 lateral auxiliary switch block (product version E03 and higher) may be mounted onto the line contactor (Q11) and onto the star (wye) contactor (Q12).

Note

Sizes S00 to S3

Sizes S00 to S3 use the same function modules.
From product version *E04* and higher, the 3RA2813/14/15/16 function modules can be used for mounting on 3RT2.4 contactors (size S3).
The 3RA2811/12 function modules can be used for mounting on 3RT2.1 / 3RT2.2 contactors (sizes S00 and S0).
The 3RA2831/32 function modules of product version *E03* and higher can be used for mounting on 3RT2.4 contactors (size S3).

Reference

More information ...	Can be found in the appendix ...
About the different versions of the 3RA28 function modules	"List of references" under "Manuals - SIRIUS Modular System (Page 463)" in the manual "SIRIUS - SIRIUS 3RA28 function modules for mounting on 3RT2 contactors".
About mounting 3RA28 function modules on 3RT2 contactors	

8.26 Assembly kit for reversing contactor assemblies (sizes S00 to S3)

8.26.1 Description

Users can mount the 3RA23 reversing contactor assembly using various assembly kits for screw and spring-loaded connections.

Note

The 3RT201. / 3RT202. / 3RT203. / 3RT204. power contactors required for installing the 3RA23 reversing contactor assembly in sizes S00 to S3 have to be ordered separately.

Assembly kit for 3RA23 reversing contactor assembly

The following components are included in delivery with the assembly kit for 3RA23 reversing contactor assembly:

- Sizes S00 / S0
  - Mechanical interlock
  - 2 connecting clips for 2 contactors
  - Wiring modules, top and bottom
  - Auxiliary wiring module top and bottom
- Sizes S2 / S3
  - 2 connecting pins
  - Wiring modules, top and bottom
  - Auxiliary wiring modules top and bottom with screw connection only
  - 3 cables with spring-loaded connection

Note

The mechanical interlock for sizes S2 / S3 must be ordered separately as an accessory.

Table 8- 40 Versions of the assembly kit for 3RA23 reversing contactor assembly

Connection system	Size	Article number
Screw connection	S00	3RA2913-2AA1
	S0	3RA2923-2AA1
	S2	3RA2933-2AA1
	S3	3RA2943-2AA1
Spring-loaded connection[1)]	S00	3RA2913-2AA2
	S0	3RA2923-2AA2
	S2	3RA2933-2AA2
	S3	3RA2943-2AA2

1) For size S2, spring-loaded connection is only available in the control circuit.

Electrical interlock

The assembly kit for contactors (size S00 to S3) with screw-type connections contains wiring modules for connecting the main and control current paths.
The assembly kit for contactors (size S00) with screw-type connections contains wiring modules for connecting the main and control current paths.
For contactors (size S0) with spring-loaded connections the kit only contains wiring modules for connecting the main circuit. If the control circuit wiring (electrical interlock) is also required, the auxiliary switches must be wired separately as necessary. The procedure is described in the chapter titled Mounting (Page 335).

8.26.2 Mounting size S00

The reversing contactor assemblies can be built from contactors with screw connections or spring-loaded connections:

- Standard contactor (Q 11) for direction of rotation 1 (clockwise rotation): Left
- Standard contactor (Q 12) for direction of rotation 2 (counterclockwise rotation): Right

The illustration below shows example procedures for assembling the reversing contactor assembly 3RA23 size S00 with screw-type connection. Instructions 1 to 5 show how to assemble the contactors using the mechanical interlock and the connecting clips.

Assembling the reversing contactor assembly with screw-type connection - size S00

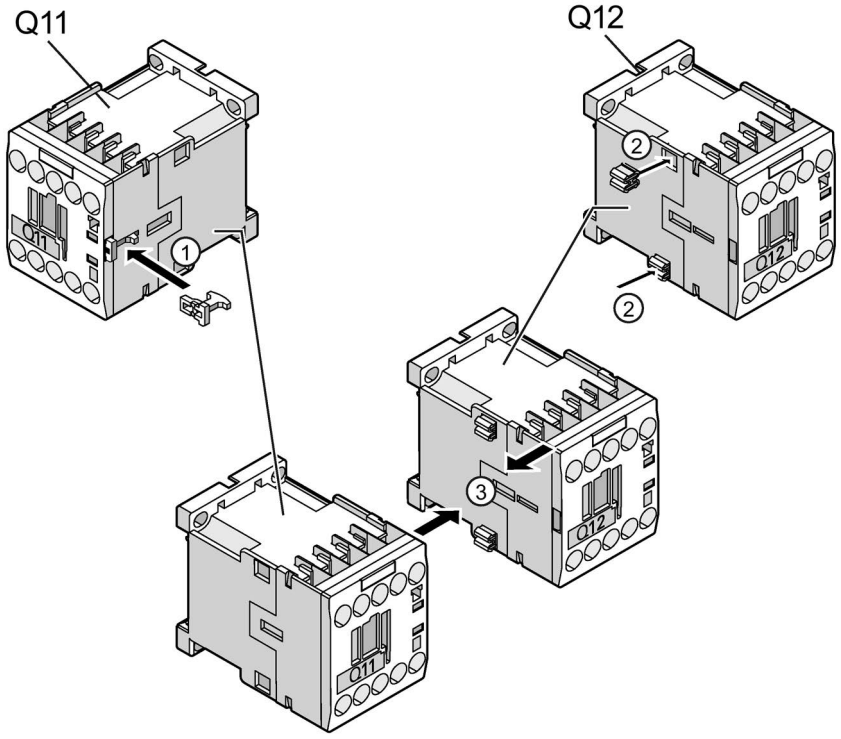

① Insert the mechanical interlock into the opening on the right-hand side of contactor Q11.
② Insert the connecting clips into the openings on contactor Q12.
③ Connect contactors Q11 and Q12 together.

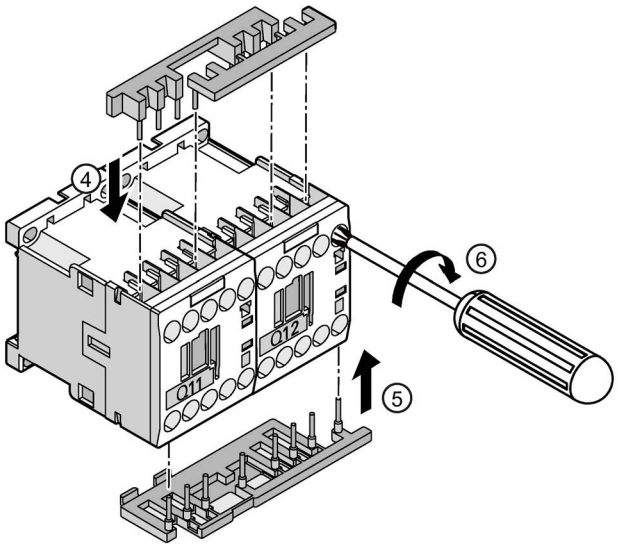

④ Attach the wiring modules for connecting the main and control current paths to the contactors from above.
⑤ Attach the wiring modules for connecting the main current paths to the contactors from below.
⑥ Screw the wiring modules tight with a screwdriver.

Electrical interlock

Note

Contactors with one NC contact in the basic device (3RT201.) are required for the electrical interlock.

Assembling the reversing contactor assembly with spring-loaded connection - size S00

The mechanical interlock and the connecting clips are mounted in the same way as described for size S00 with screw-type connection.

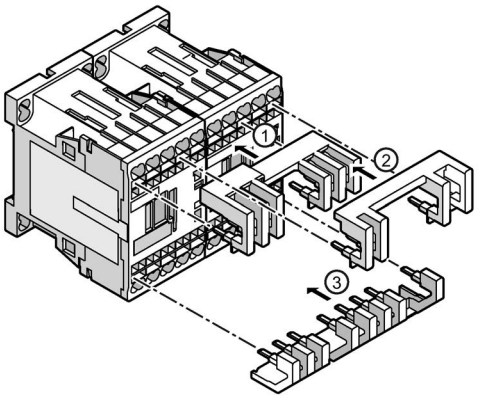

① Attach the wiring modules for connecting the main current paths to the contactors from above.
② Attach the wiring modules for connecting the control current paths to the contactors from above.
③ Attach the wiring modules for connecting the main current paths to the contactors from below.

8.26.3 Mounting size S0

The reversing contactor assemblies can be built from contactors with screw connections or spring-loaded connections:

- Standard contactor (Q 11) for direction of rotation 1 (clockwise rotation): Left
- Standard contactor (Q 12) for direction of rotation 2 (counterclockwise rotation): Right

Assembling the reversing contactor assembly with screw-type connection - size S0

The illustrations below show the components of the assembly kit for the reversing contactor assembly in size S0, and they explain the assembly procedure. The mechanical interlock and the connecting clips are mounted in the same way as described for size S00 with screw-type connection. See the chapter "Mounting S00 (Page 335)" in this regard.

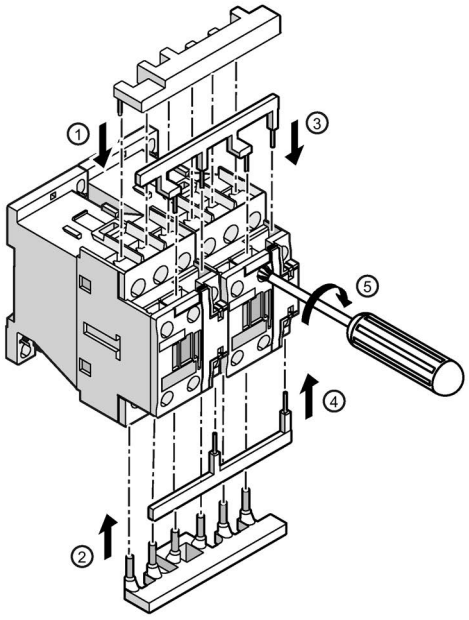

① Attach the wiring modules for connecting the main current paths to the contactors from above.
② Attach the wiring modules for connecting the main current paths to the contactors from below.
③ Attach the wiring modules for connecting the control current paths to the contactors from above.
④ Attach the wiring modules for connecting the control current paths to the contactors from below.
⑤ Screw the wiring modules tight with a screwdriver.

Electrical interlock

Note

Contactors with one NC contact in the basic device (3RT201.) are required for the electrical interlock.

Assembling the reversing contactor assembly with spring-loaded connection - size S0

The illustrations below show the components of the assembly kit for the reversing contactor assembly in size S0 and explain the assembly procedure. The mechanical interlock and the connecting clips are mounted in the same way as described for size S00 with screw-type connection. See the chapter "Mounting S00 (Page 335)" in this regard.

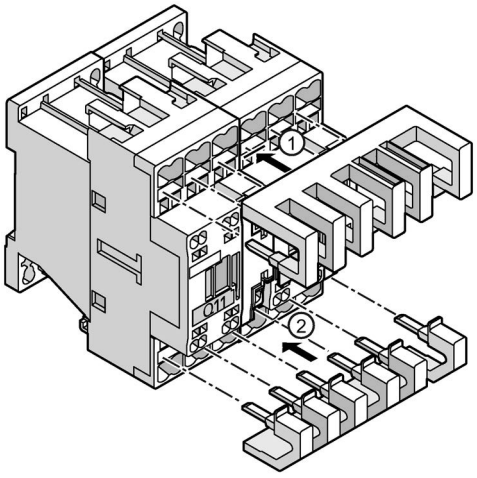

① Attach the wiring modules for connecting the main current paths to the contactors from above.
② Attach the wiring modules for connecting the main current paths to the contactors from below.

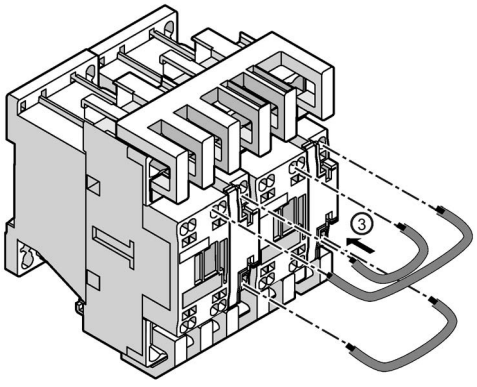

③ To connect the control current paths, strip the conductors and push them into the contactor terminals.

Note:
The conductors required for connecting the control current paths are not included in the scope of supply of the assembly kit for reversing contactor assemblies with spring-loaded connection (size S0).

4-pole assembly with mechanical interlock

The illustrations below show how to mount the 4-pole assembly with mechanical interlock in size S0.

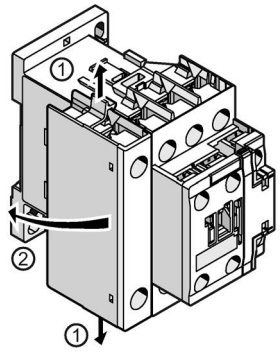

①/② Remove the 4th pole from one of the two contactors by releasing the snap hooks.

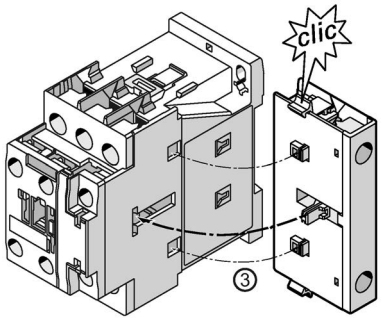

③ Attach the 4th pole to the other side of the same contactor by hooking it into the openings on the contactor and snapping the pole onto the contactor.

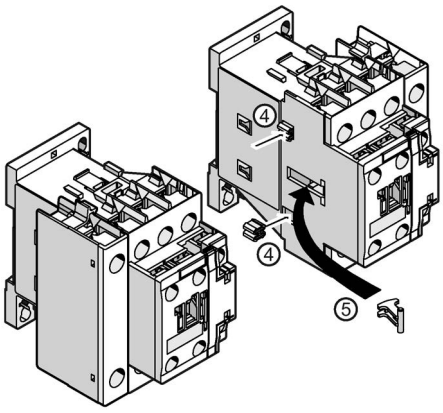

④ Insert the connecting clips into the openings on contactor Q12.

⑤ Secure the mechanical interlock on the left-hand side of contactor Q12.

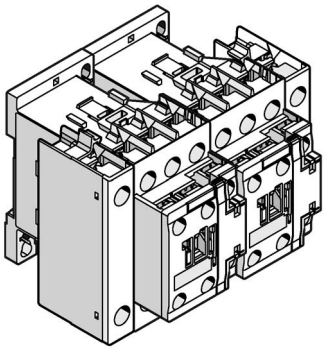

⑥ Connect contactors Q11 and Q12 together.

8.26.4 Mounting size S2

The reversing contactor assemblies can be built from contactors with screw connections or spring-loaded connections:

- Standard contactor (Q 11) for direction of rotation 1 (clockwise rotation): Left
- Standard contactor (Q 12) for direction of rotation 2 (counterclockwise rotation): Right

Assembling the reversing contactor assembly with screw-type connection - size S2

The illustrations below show the components of the assembly kit for the reversing contactor assembly in size S2 and explain the assembly procedure.

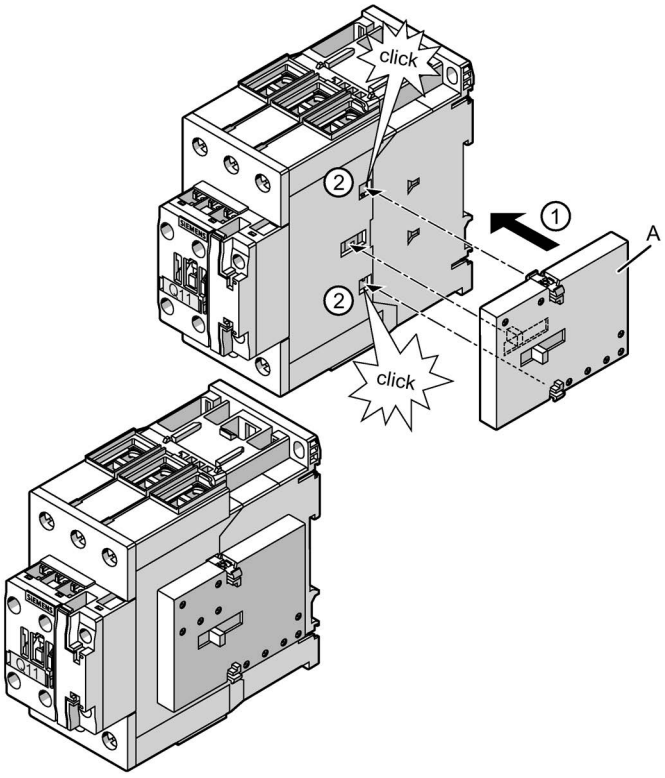

①/② Insert the mechanical interlock (3RA2934-2B) into the opening on the right-hand side of the contactor.

Optional component A (mechanical interlock) is mandatory for mechanical interlocking.

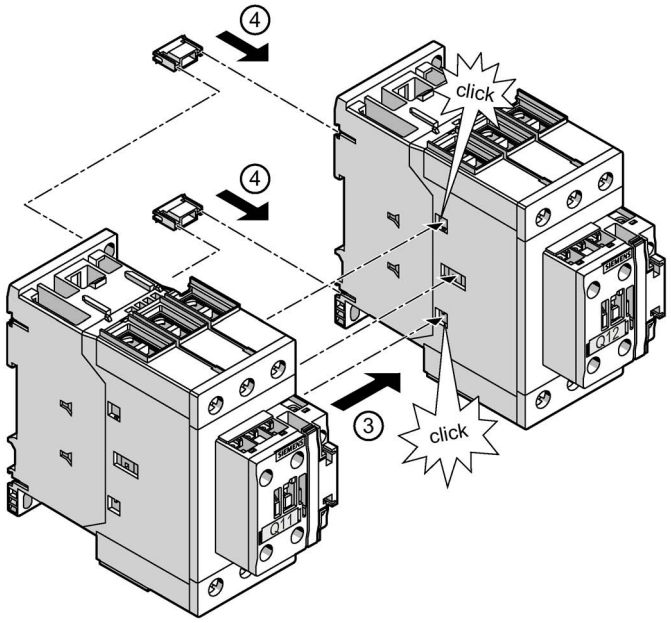

③ Connect the contactors with each other.

④ Insert the connecting clips into the openings on the contactor.

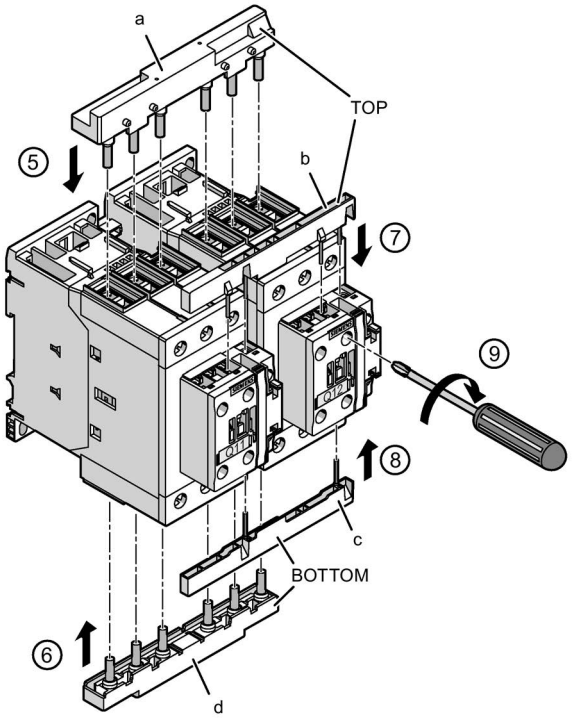

⑤ Attach the wiring modules for connecting the main current paths to the contactors from above (a).

⑥ Attach the wiring modules for connecting the main current paths to the contactors from below (d).

⑦ Attach the wiring modules for connecting the control current paths to the contactors from above (b).

⑧ Attach the wiring modules for connecting the control current paths to the contactors from below (c).

⑨ Screw the wiring modules tight with a screwdriver.

Mounting the reversing contactor assembly with spring-loaded connection - size S2

The illustrations below show the components of the assembly kit for the reversing contactor assembly in size S2, and they explain the assembly procedure. The mechanical interlock and the connecting clips are mounted in the same way as described for size S2 with screw-type connection.

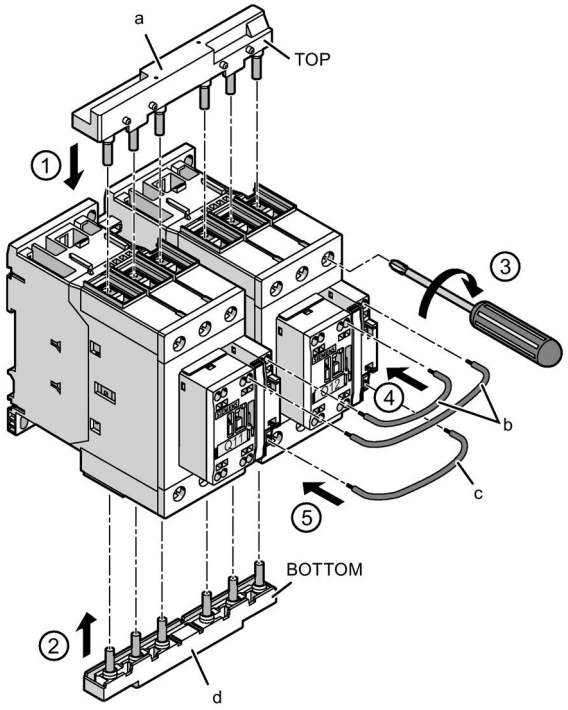

① Attach the wiring modules for connecting the main current paths to the contactors from above (a).

② Attach the wiring modules for connecting the main current paths to the contactors from below (d).

③ Screw the wiring modules tight with a screwdriver.

④ To connect the control current paths (b), push the conductors into the contactor terminals.

⑤ To connect the control current paths (c), push the conductors into the contactor terminals.

8.26.5 Mounting size S3

The reversing contactor assemblies can be built from contactors with screw connections or spring-loaded connections:

- Standard contactor (Q 11) for direction of rotation 1 (clockwise rotation): Left
- Standard contactor (Q 12) for direction of rotation 2 (counterclockwise rotation): Right

Mounting the reversing contactor assembly with screw-type connection - size S3

The illustrations below show the components of the assembly kit for the reversing contactor assembly in size S3, and they explain the assembly procedure.

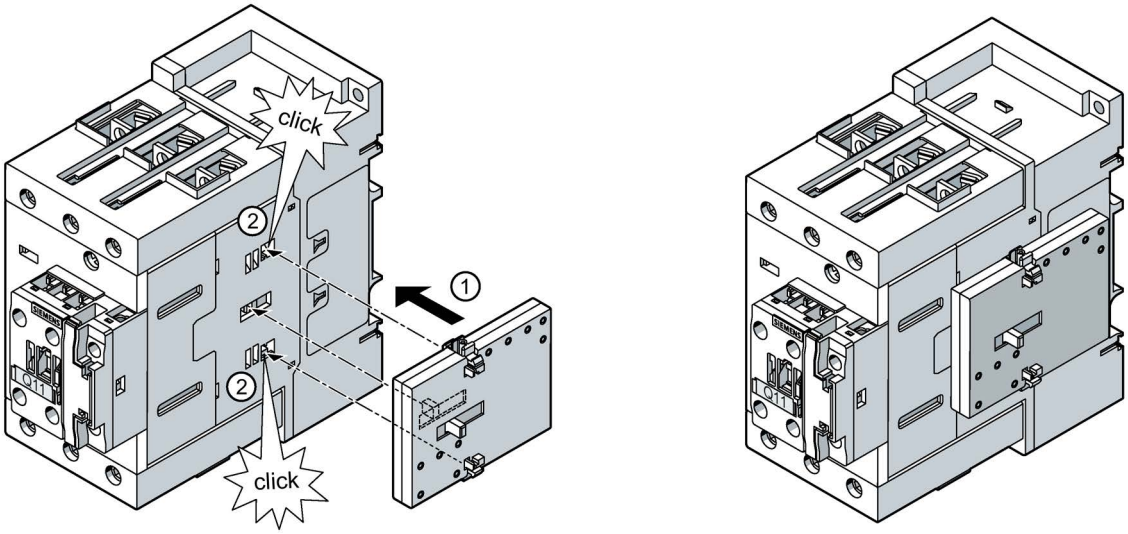

①/② Insert the mechanical interlock (3RA2934-2B) into the opening on the right-hand side of the contactor.
Optional component A (mechanical interlock) is mandatory for mechanical interlocking.

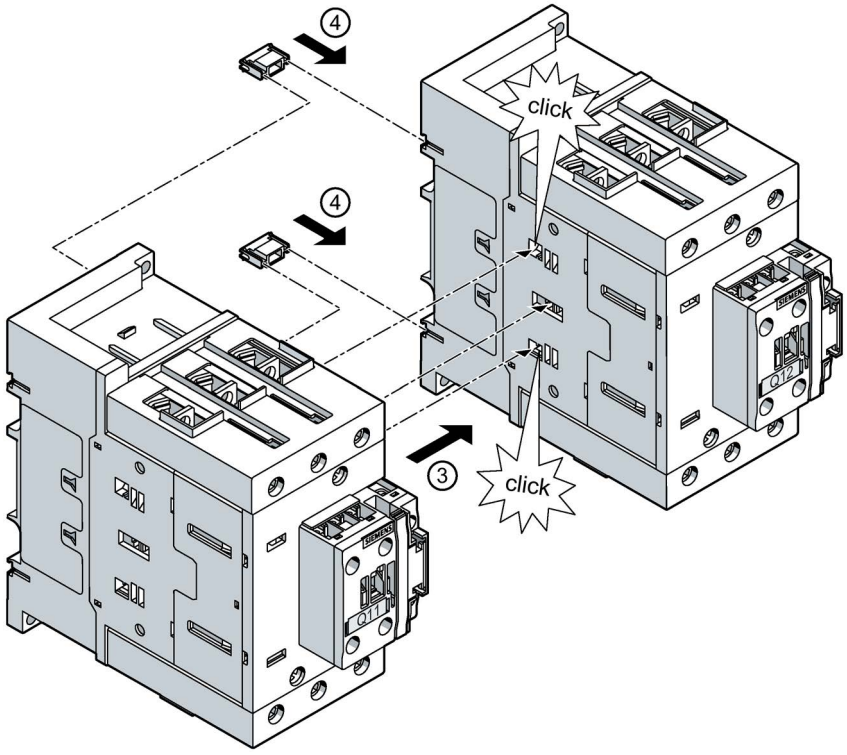

③ Connect the contactors with each other.
④ Insert the connecting clips into the openings on the contactor.

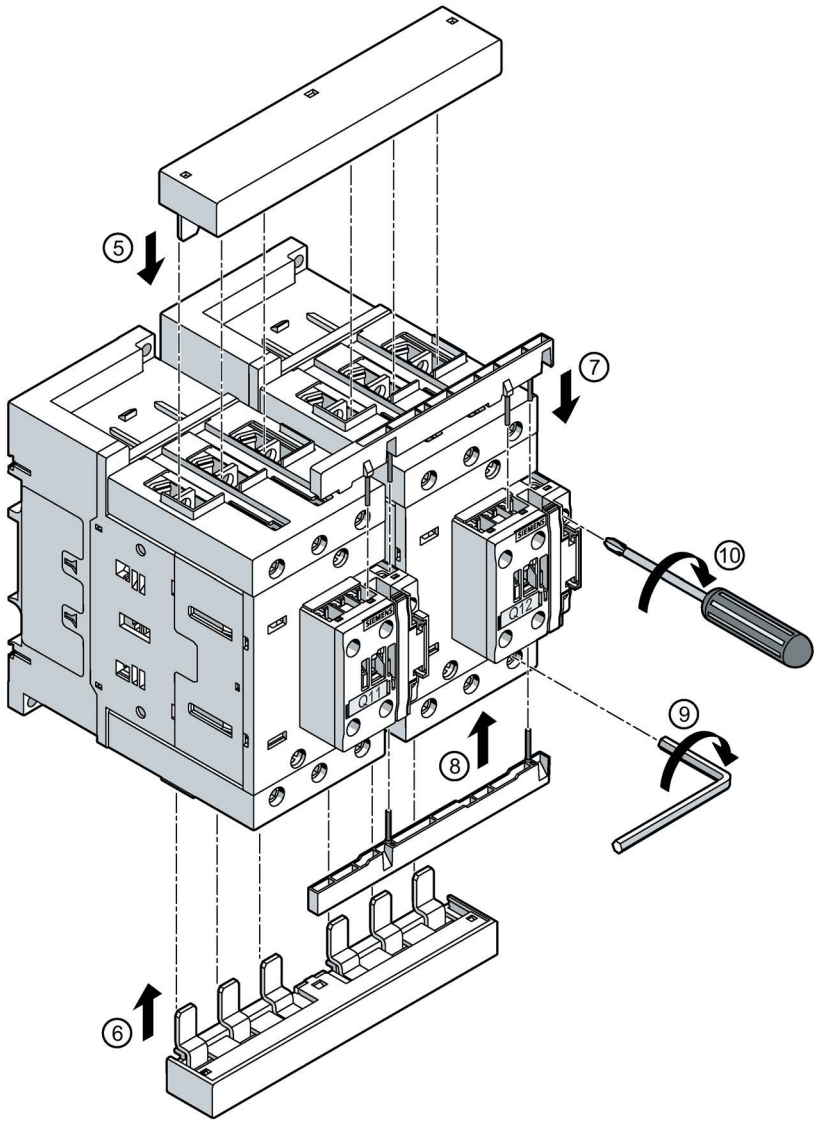

⑤ Attach the wiring modules for connecting the main current paths to the contactors from above.
⑥ Attach the wiring modules for connecting the main current paths to the contactors from below.
⑦ Attach the wiring modules for connecting the control current paths to the contactors from above.
⑧ Attach the wiring modules for connecting the control current paths to the contactors from below.
⑨ Screw the wiring modules tight with a screwdriver.
⑩ Screw the wiring modules in place.

Mounting the reversing contactor assembly with spring-loaded connection - size S3

The illustrations below show the components of the assembly kit for the reversing contactor assembly in size S3, and they explain the assembly procedure.

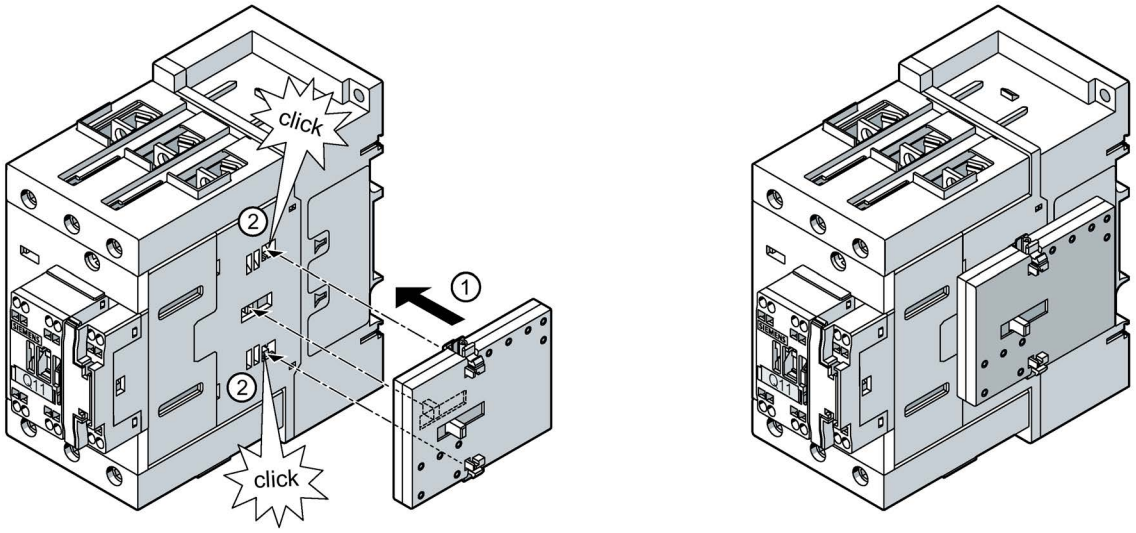

①/② Insert the mechanical interlock (3RA2934-2B) into the opening on the right-hand side of the contactor.
Optional component A (mechanical interlock) is mandatory for mechanical interlocking.

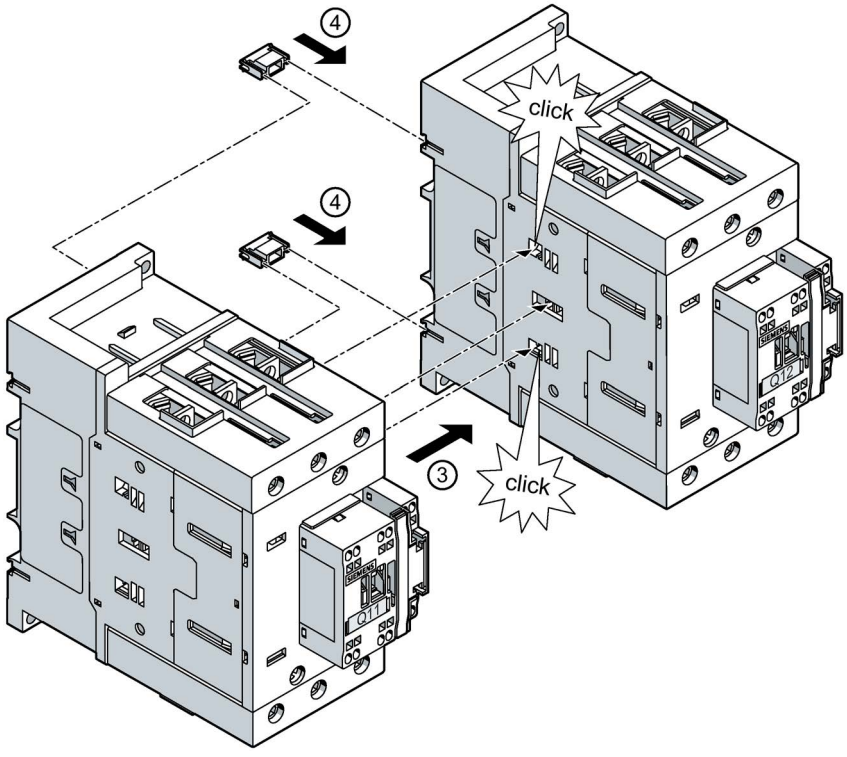

③ Connect the contactors with each other.
④ Insert the connecting clips into the openings on the contactor.

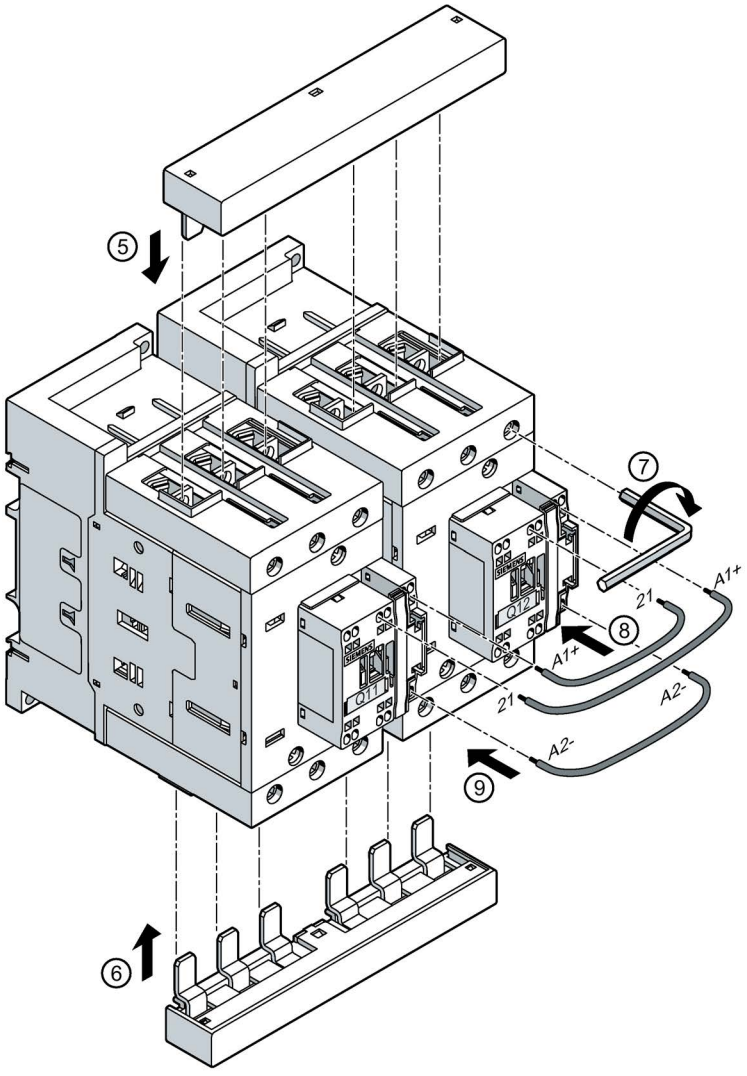

⑤ Attach the wiring modules for connecting the main current paths to the contactors from above.
⑥ Attach the wiring modules for connecting the main current paths to the contactors from below.
⑦ Screw the wiring modules in place.
⑧ To connect the control current paths, push the conductors into the contactor terminals.
⑨ To connect the control current paths, push the conductors into the contactor terminals.

8.27 Wiring kit for reversing contactor assemblies (sizes S6 to S12)

8.27.1 Description

Users can mount the reversing contactor assembly using various assembly kits.

The following accessories for the basic units can also be used for the reversing contactor assemblies:

- Auxiliary switch blocks (on the front, on the side)
- Surge suppressors

The following accessories are provided especially for the reversing contactor assemblies:

- Mechanical interlocks (article number: 3RA1954-2A)
- Mechanical connector (article number: 3RA1932-2D)
- Wiring modules, top and bottom
  - S6 (article number: 3RA1953-2A, 3RA1953-2M)
  - S10 (article number: 3RA1963-2A)
  - S12 (article number: 3RA1973-2A)
- Base plates
  - S6 (article number: 3RA1952-2A)
  - S10 (article number: 3RA1962-2A)
  - S12 (article number: 3RA1972-2A)

8.27.2 Mounting size S6

The reversing contactor assemblies can be built from contactors with screw connections or spring-loaded connections:

- Standard contactor (Q 11) for direction of rotation 1 (clockwise rotation): Left
- Standard contactor (Q 12) for direction of rotation 2 (counterclockwise rotation): Right

Mounting the reversing contactor assembly with screw-type connection - size S6

The illustrations below show the components of the assembly kit for the reversing contactor assembly in size S6, and they explain the assembly procedure.

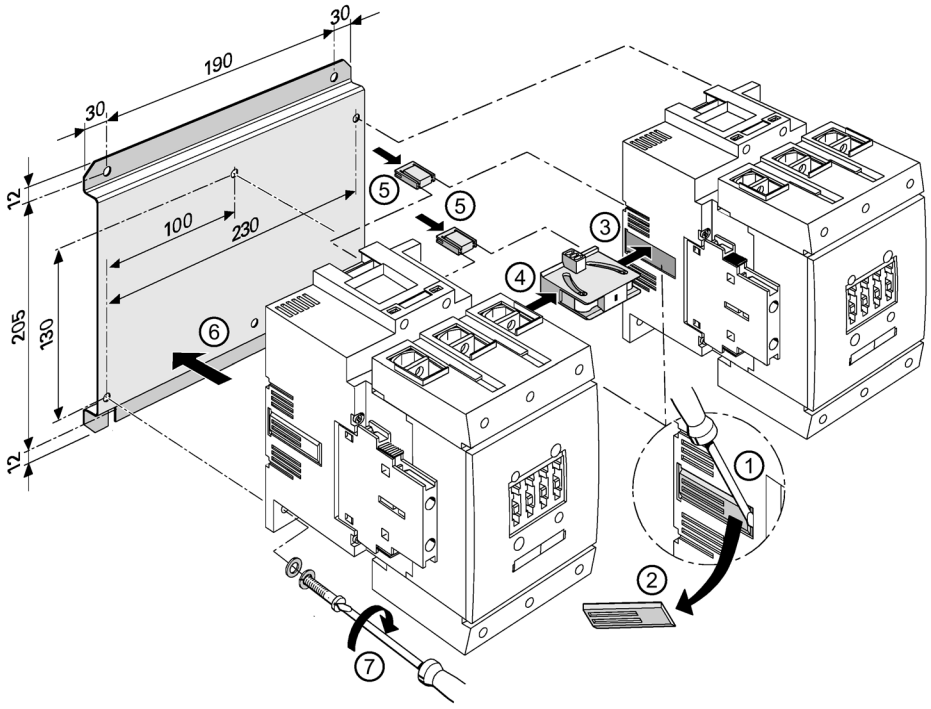

①/② Remove the covers that close the openings for mechanical interlocking on the two contactors.

③/④ Insert the mechanical interlock on the left and right into these openings to interlock the contactors mechanically.

⑤ Attach the two connecting clips onto the rear of the contactors.

⑥/⑦ Mount the assembly on a base plate (optional step)

Screws: M6 x 25 (4 x)

Tightening torque: 4.0 ... 6.0 Nm

Contactor with box terminals

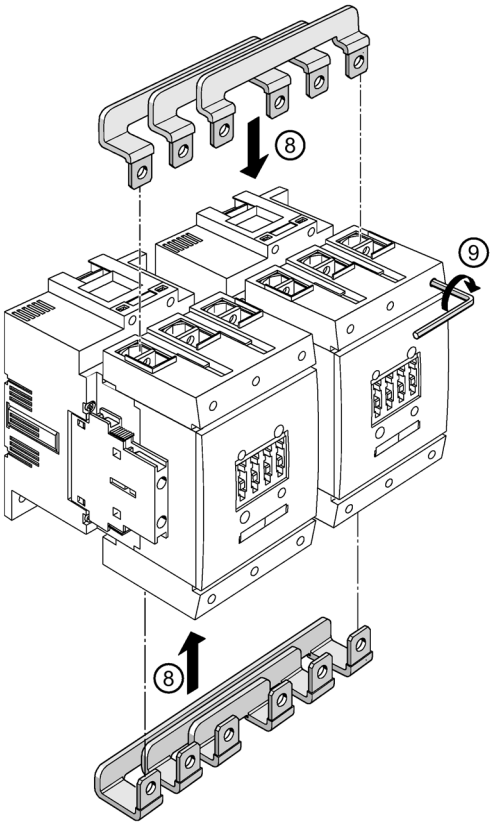

⑧ Attach the wiring modules to connect the main current paths.
⑨ Tighten the connecting terminals.

Contactor with busbar connections

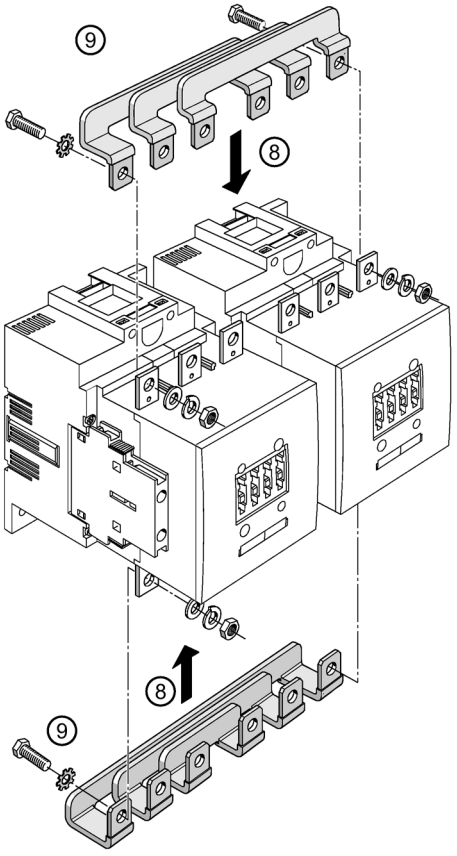

⑧ Attach the wiring modules to connect the main current paths.
⑨ Tighten the connecting terminals.
Screws: M8 x 25

8.27.3 Mounting sizes S10 and S12

The reversing contactor assemblies can be built from contactors with screw connections or spring-loaded connections:

- Standard contactor (Q 11) for direction of rotation 1 (clockwise rotation): Left
- Standard contactor (Q 12) for direction of rotation 2 (counterclockwise rotation): Right

Mounting the reversing contactor assembly with screw-type connection - sizes S10 and S12

The illustrations below show the components of the assembly kit for the reversing contactor assembly in sizes S10 and S12, and they explain the assembly procedure.

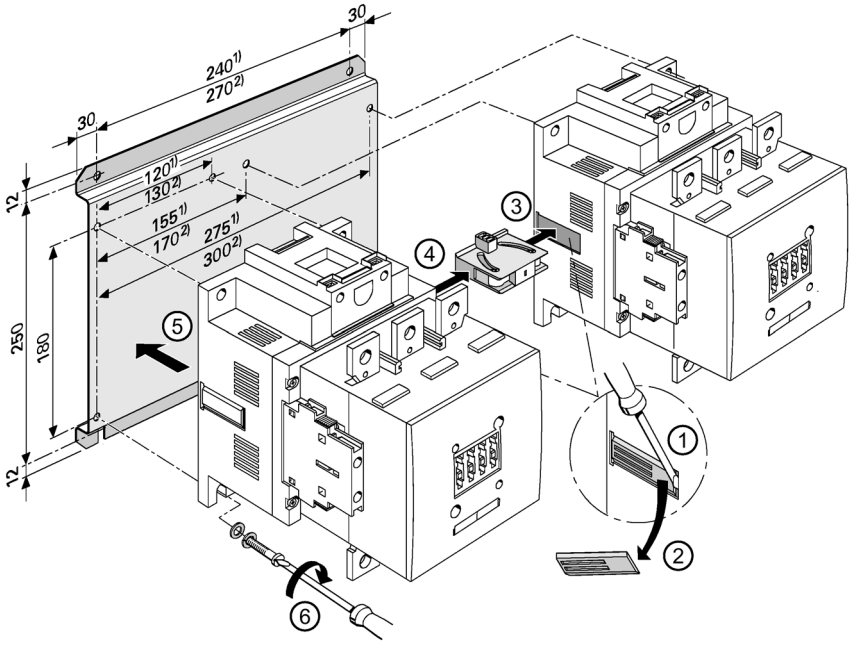

①/② Remove the covers that close the openings for mechanical interlocking on the two contactors.

③/④ Insert the mechanical interlock on the left and right into these openings to interlock the contactors mechanically.

⑤ Attach the two connecting clips onto the rear of the contactors.

⑥/⑦ Mount the assembly on a base plate.

Screws: M6 x 25 (4 x)

Tightening torque: 4.0 ... 6.0 Nm

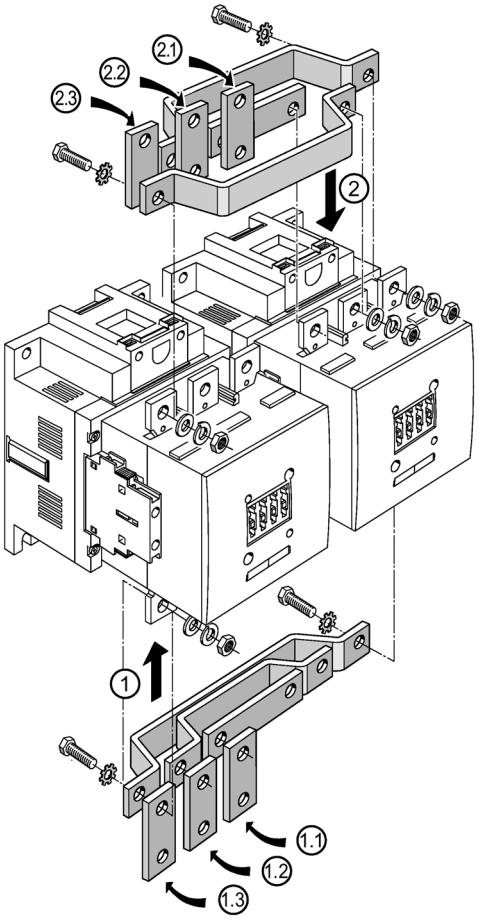

① First, mount the lower wiring module with the extension tabs (1.1/1.2/1.3) to connect the main current paths, and tighten the connecting terminals.
Screws: M10 x 3 5 (3 x)

② Then mount the upper wiring module (8) with the extension tabs (2.1/2.2/2.3) to connect the main current paths, and tighten the connecting terminals.
Screws: M10 x 3 5 (3 x)

8.28 Assembly kit for contactor assemblies for star-delta (wye-delta) start (sizes S00 to S3)

8.28.1 Description

Prerequisite

The following components, which have to be ordered separately, are required to mount the contactor assembly for star-delta (wye-delta) start:

- Assembly kit for the 3RA24 contactor assembly for star-delta (wye-delta) start
- Function modules with or without communication connection.
- Three power contactors 3RT20

Note

For size S2 / S3, spring-loaded connection only in the control circuit

The following assemblies for spring-loaded connection are available for sizes S00 and S0 only.

Note

If the function modules are used, they take over the tasks associated with control circuit wiring and the timing relay. However, an installation without function modules and with an additional external timing relay continues to be possible. Accordingly, the scope of supply of the assembly kit includes the wiring modules for the control circuit wiring (these are not required if function modules are being used).

Assembly kit for 3RA24 contactor assembly for star-delta (wye-delta) start

The assembly kit for customer assembly of the 3RA24 contactor assembly for star-delta (wye-delta) start comprises the following components and is available in various versions.

Table 8- 41 Components for assembling the contactor assembly for star-delta (wye-delta) start

Assembly kit	Assembly kit components	Connection system	Article number
Assembly kit for size S00	• Mechanical interlock • 4 connecting clips • Star jumper • Wiring modules, top and bottom	Screw connection	3RA2913-2BB1
		Spring-loaded connection	3RA2913-2BB2
Assembly kit for size S0	• Mechanical interlock • 4 connecting clips • Star jumper • Wiring modules, top and bottom	Screw connection	3RA2923-2BB1
		Spring-loaded connection	3RA2923-2BB2
Assembly kit for size S2[1] (S2-S2-S0)	• 2 connecting clips • Star jumper S0 • Wiring modules, top and bottom • Contactor base (for AC contactor size S0) The contactor base must not be used for DIN rail mounting. • Spacer disk • 4 cables	Screw connection and spring-loaded connection	3RA2933-2C
Assembly kit for size S2[1] (S2-S2-S2)	• 4 connecting clips • Star jumper S2 • Wiring modules, top and bottom • Auxiliary wiring modules top and bottom (screw connection only) • 1 cable for screw connection • 4 cables for spring-loaded connection	Screw connection	3RA2933-2BB1
		Spring-loaded connection	3RA2933-2BB2

Assembly kit	Assembly kit components	Connection system	Article number
Assembly kit for size S3[2] (S3-S3-S2)	• 4 connecting clips • Star jumper S2 • Wiring modules, top and bottom • 4 cables	Screw connection and spring-loaded connection	3RA2943-2C
Assembly kit for size S3[2] (S3-S3-S3)	• 4 connecting clips • Neutral bridge S3 • Wiring modules, top and bottom • Auxiliary wiring modules top and bottom (screw connection only) • 1 cable for screw connection • 4 cables for spring-loaded connection	Screw connection	3RA2943-2BB1
		Spring-loaded connection	3RA2943-2BB2

1) In addition to the assembly kit S2, the mechanical interlock (3RA2934-2B) and the mounting plate (3RA2932-2F) can be optionally used.

2) The mechanical interlock (3RA2934-2B) and the mounting plate (3RA2942-2F) can be optionally used in addition to the S3 assembly kit.

Function modules without communication connection

The function module without communication connection can be used for sizes S00 to S3 of contactor assemblies for star-delta (wye-delta) start, and it can be plugged in on the front of the contactors regardless of the connection system selected. It comprises the following components, which can be ordered as a complete module kit (3RA2816-0EW20).

- 3RA2912-0 basic module for star-delta (wye-delta) with integrated control logic and time setting
- Two coupling modules with integrated connecting cable 3RA2911-0

Function modules with communication connection

The SIRIUS modular system offers 3RA27 function modules for connection to the automation level; they are fitted with terminals for connection to AS-Interface (3RA2711) or IO-Link (3RA2712).

Note

If the contactor assembly for star-delta (wye-delta) starting is configured with the communication-capable 3RA27 function modules, a contactor with voltage tapping (3RT2...-....-0CC0) must be used as the line contactor.

Reference

More information ...	Can be found in the chapter titled...
About function modules without communication connection 3RA28	"List of references" under "Manuals - SIRIUS Modular System (Page 463)" in the manual "SIRIUS - SIRIUS 3RA28 function modules for mounting on 3RT2 contactors".

More information ...	Can be found in the manuals ...
About function modules with communication connection 3RA27	• "SIRIUS - SIRIUS 3RA2712 function modules for AS-Interface (http://support.automation.siemens.com/WW/view/en/39318922)" manual (3ZX1012-0RA27-0AB0) • "SIRIUS - SIRIUS 3RA2711 function modules for IO-Link (http://support.automation.siemens.com/WW/view/en/39319600)" manual (3ZX1012-0RA27-1AB1)

8.28.2 Mounting size S00

The contactor assemblies for star-delta (wye-delta) start can be built from contactors with screw connections or spring-loaded connections:

- Line contactor (Q11): Left
- Delta contactor (Q13): Center
- Star contactor (Q12): Right

This arrangement applies for all installation instructions described in this chapter.

The illustration below shows example procedures for assembling the contactor assembly for star-delta (wye-delta) start in size S0 with screw-type connection. Instructions 1 to 6 show how to assemble the contactors using the components supplied in the assembly kit.

Assembling the contactor assembly for star-delta (wye-delta) start with screw-type connection - size S00

⚠ WARNING

Danger, high voltage!

Will cause death or serious injury.

Turn off and lock out all power supplying this device before working on this device.

The mechanical interlock and the connecting clips are mounted and the function modules are plugged in in the same way as described for size S0 with screw-type connection. See the chapter "Mounting S0 (Page 365)" in this regard.

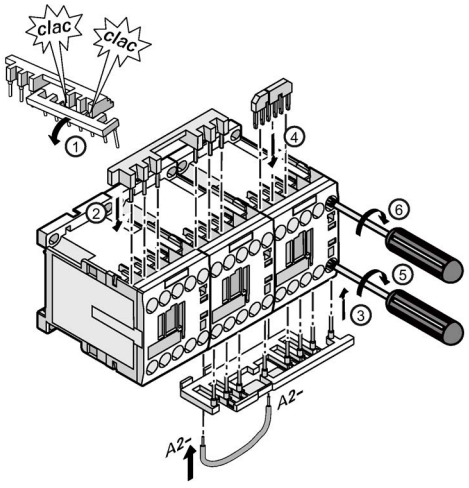

① Break the wiring module apart.
The wiring modules for connecting the control current paths are not needed to build a contactor assembly for star-delta (wye-delta) start with function modules.

②/③ Attach the wiring module for connecting the main current paths to contactors Q11 and Q13 from above and below.

④ Attach the wiring module for the neutral bridge to contactor Q12 from above.

⑤/⑥ Screw the wiring modules tight with a screwdriver.

Electrical interlocking is available only if no 3RA28 is used.

Note

The function modules are assembled as previously described.

Assembling the contactor assembly for star-delta (wye-delta) start with spring-loaded connection - size S00

The mechanical interlock and the connecting clips are mounted and the function modules are plugged in in the same way as described for size S0 with screw-type connection. See the chapter "Mounting S0 (Page 365)" in this regard.

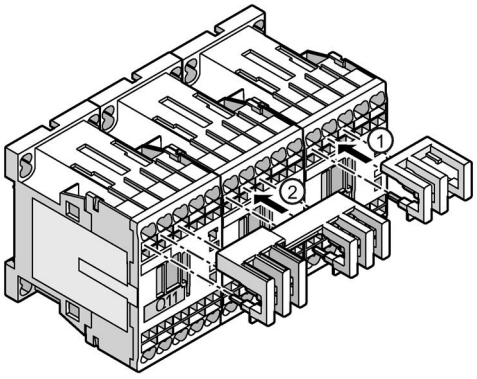

① Attach the wiring module for the neutral bridge to contactor Q12 from above.
The wiring modules for connecting the control current paths are not needed to build a contactor assembly for star-delta (wye-delta) start with function modules.

② Attach the wiring module for connecting the main current paths to contactors Q11 and Q13 from above.

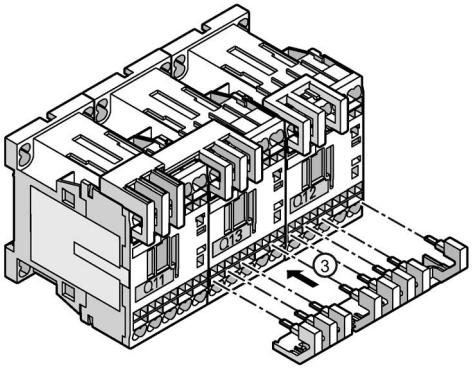

③ Attach the wiring module for connecting the main current paths to contactors Q13 and Q12 from below.

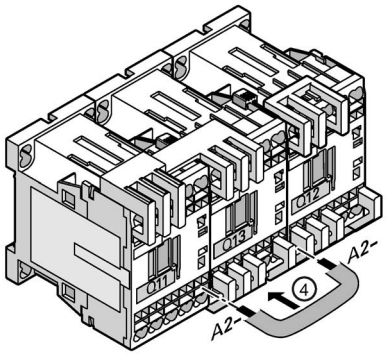

④ Insert the screwdriver into the rectangular operating slot as far as it will go. The screwdriver blade keeps the spring-loaded terminal open automatically. Insert the conductor into the oval connection slot and then pull it back out again.

Note

The function modules are assembled as previously described.

8.28.3 Mounting size S0

The contactor assemblies for star-delta (wye-delta) start can be built from contactors with screw connections or spring-loaded connections:

- Line contactor (Q11): Left
- Delta contactor (Q13): Center
- Star contactor (Q12): Right

This arrangement applies for all installation instructions described in this chapter.

The illustration below shows example procedures for assembling the contactor assembly for star-delta (wye-delta) start in size S0 with screw-type connection. Instructions 1 to 6 show how to assemble the contactors using the components supplied in the assembly kit.

Assembling the contactor assembly for star-delta (wye-delta) start with screw-type connection - size S0

Electrical interlocking is available only if no 3RA28 is used.

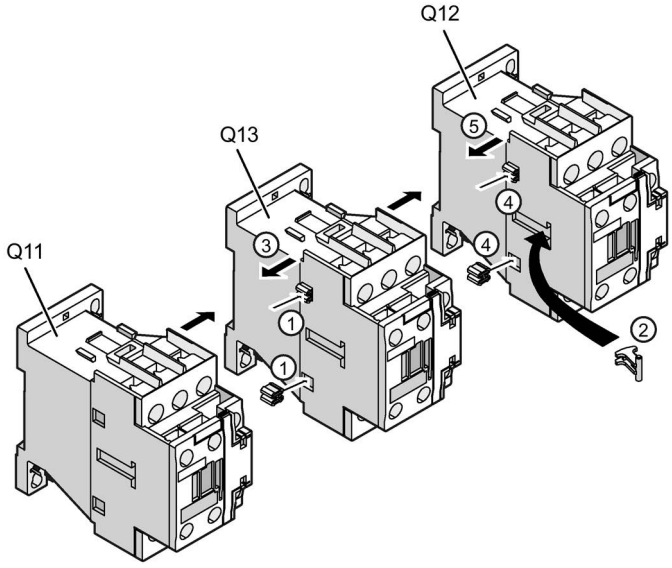

① Insert the connecting clips into the openings on contactor Q13.
② Secure the mechanical interlock on the left-hand side of contactor Q12.
③ Connect contactors Q11 and Q13 together.
④ Insert the connecting clips into the openings on contactor Q12.
⑤ Connect contactors Q11/Q13 and Q12 together.

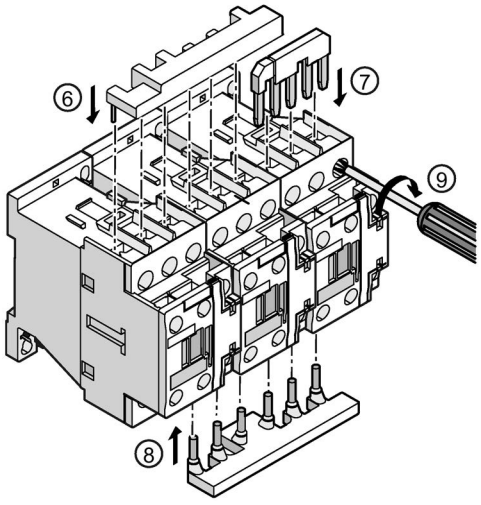

⑥ Attach the wiring module for connecting the main current paths to contactors Q11 and Q13. The wiring modules for connecting the control current paths are not needed to build a contactor assembly for star-delta (wye-delta) start with function modules.

⑦ Attach the wiring module for the neutral bridge to contactor Q12 from above.

⑧ Attach the wiring modules for connecting the main current paths to contactors Q13 and Q12 from below.

⑨ Screw the wiring modules tight with a screwdriver.

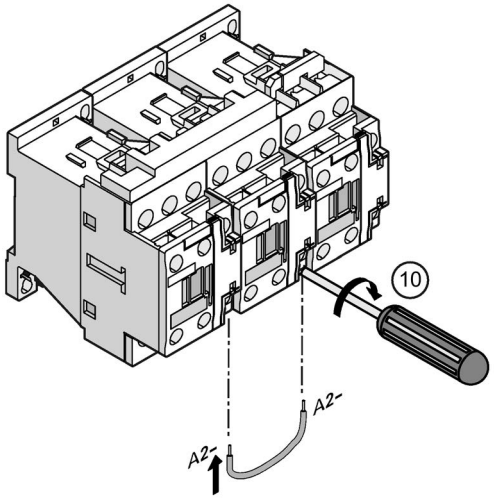

⑩ Screw the conductors tight with a screwdriver.

Mounting the function module for star-delta (wye-delta) start

⚠ WARNING

Danger, high voltage!

Will cause death or serious injury.

Turn off and lock out all power supplying this device before working on this device.

Note

Function modules perform the tasks of the circuit wiring and the timing relay

If you are building contactor assemblies from individual components, the function modules take over the tasks associated with control circuit wiring and the timing relay. The wiring modules for connecting the control current paths are not required.

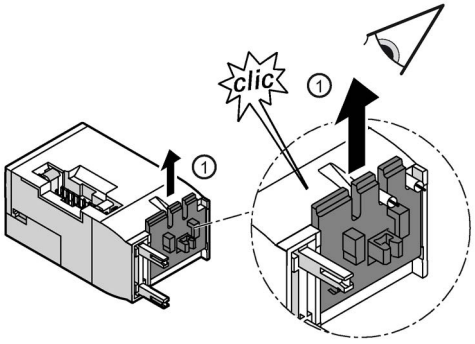

① Check that the locking slide is engaged in the topmost position.

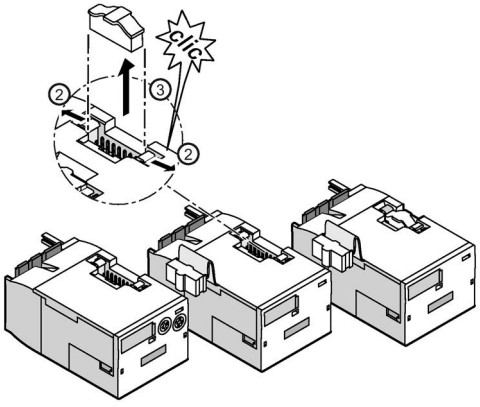

②/③ Remove the interface connection from the slot by lifting it up and out.

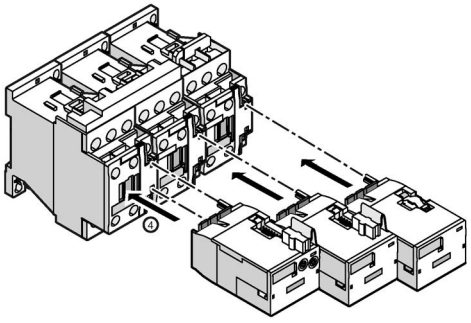

④ Attach the basic module/coupling module to the contactor from the front. To do this, insert the contacts into the openings on the contactor.

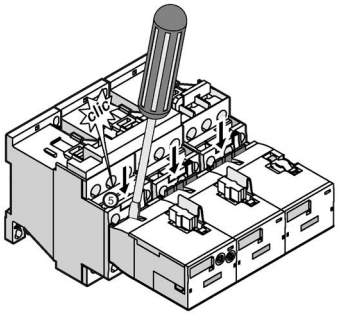

⑤ Push the locking slide down with a screwdriver until it engages.

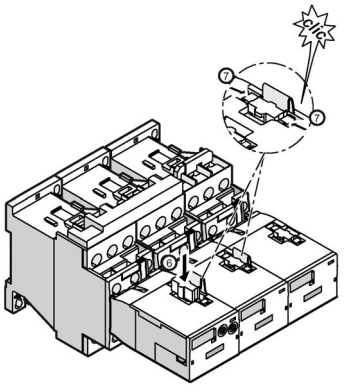

⑥/⑦ Insert the coded module connector into the slot in the correct position from above until the module connector engages in the locking mechanism.

Note

The function modules are mounted on the contactor assemblies for star-delta (wye-delta) start described below as previously described.

Assembling the contactor assembly for star-delta (wye-delta) start with spring-loaded connection - size S0

The mechanical interlock and the connecting clips are mounted and the function modules are plugged in in the same way as described for size S0 with screw-type connection.

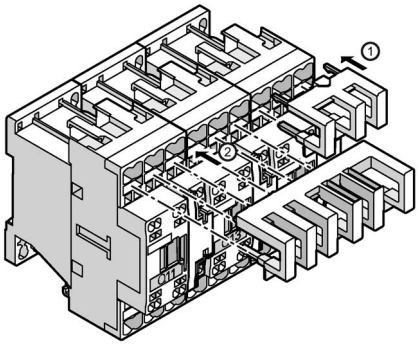

① Attach the wiring module for the neutral bridge to contactor Q12 from above.

② Attach the wiring module for connecting the main current paths to contactors Q11 and Q13 from above.

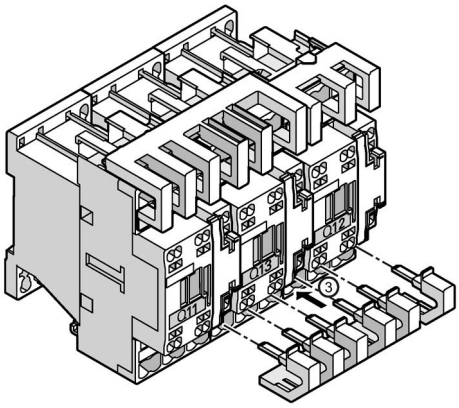

③ Attach the wiring modules for connecting the main current paths to contactors Q13 and Q12 from below.

Note

The function modules are assembled as previously described.

8.28.4 Mounting size S2

The contactor assemblies for star-delta (wye-delta) start can be built from contactors with screw connections or spring-loaded connections:

- Line contactor (Q11): Left
- Delta contactor (Q13): Center
- Star contactor (Q12): Right

This arrangement applies for all installation instructions described in this chapter.

Assembling the contactor assembly for star-delta (wye-delta) start with screw-type connection - size S2-S2-S0

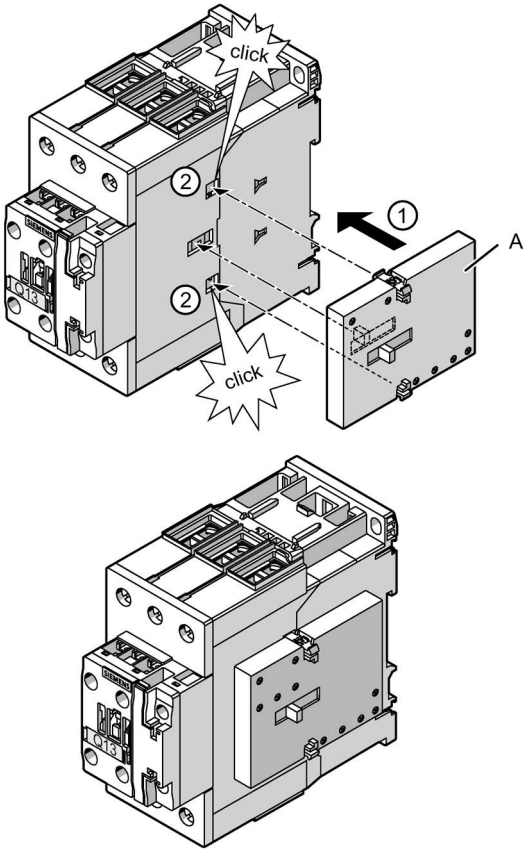

①/② Insert the mechanical interlock (3RA2934-2B) into the opening on the right-hand side of contactor Q11.

Optional component A (mechanical interlock) is mandatory for mechanical interlocking.

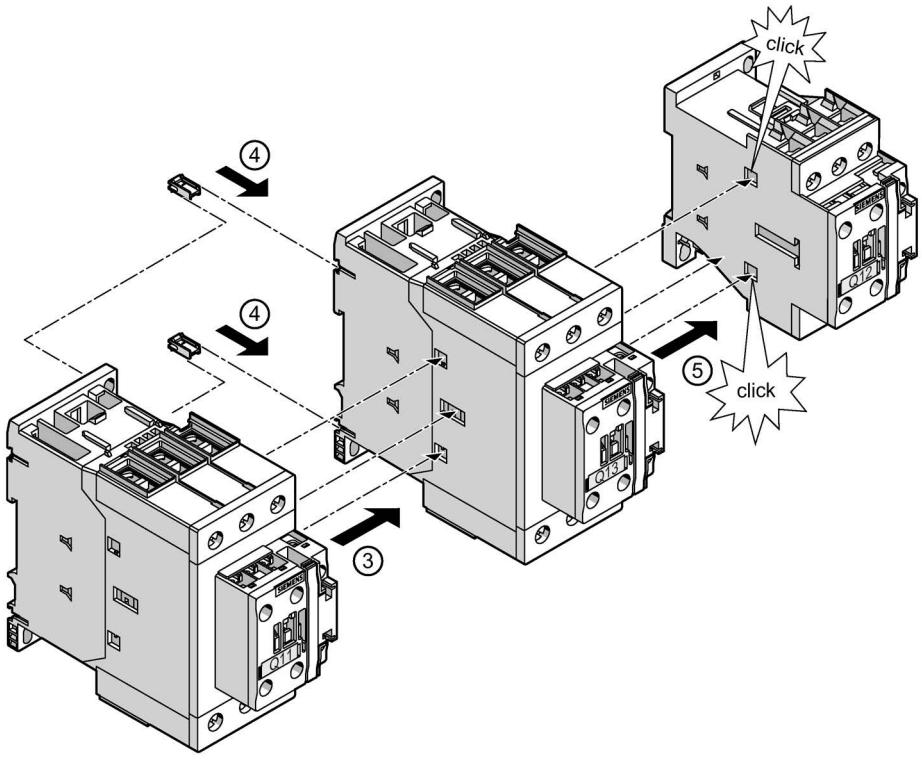

③ Connect contactors Q11 and Q13 together.
④ Insert the connection clips into the openings on contactors Q11 and Q13.
⑤ Connect contactors Q13 and Q12 together.

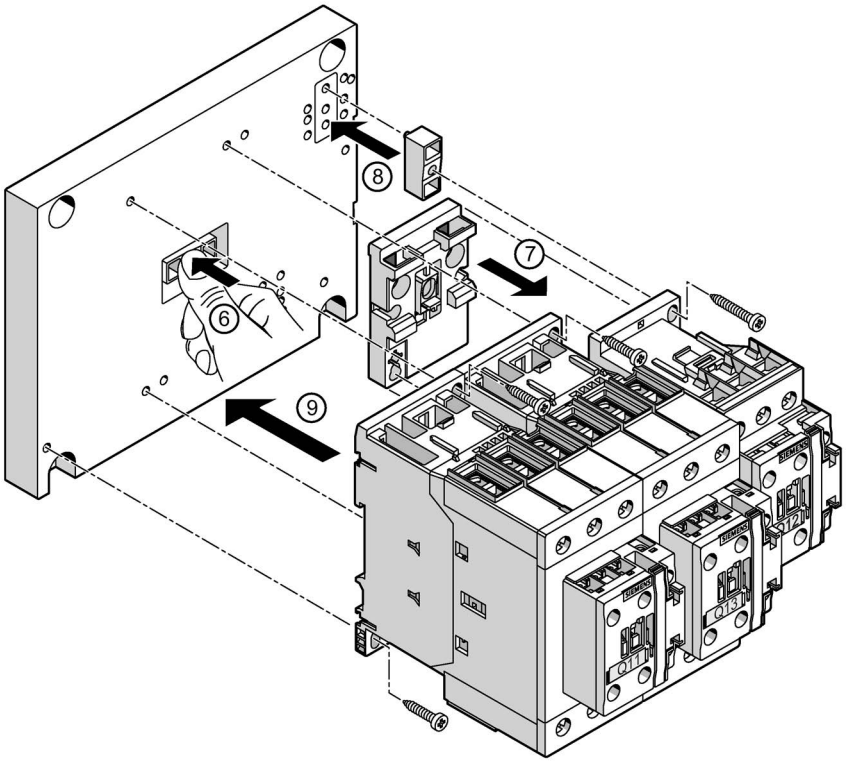

⑥ When using the mounting plate (3RA2932-2F), you must knock the spacers out of the mounting plate.

⑦ Fit the spacer disk.

⑧ Mount the spacer on the mounting plate.

⑨ Mount the contactors on the mounting plate.

Screws: 6 x M6

Tightening torque: 1.6 Nm

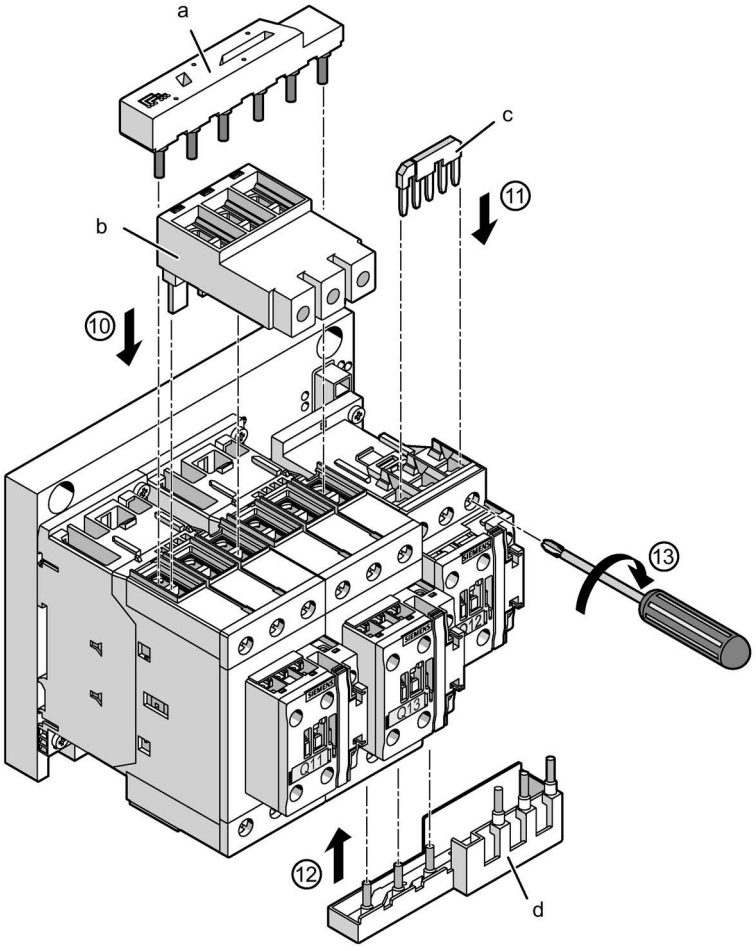

⑩ Attach the wiring module for connecting the main current paths to contactors Q11 and Q13 from above (a).
You can optionally use the 3-phase infeed terminal (b).

⑪ Attach the neutral bridge (c) to contactor Q12 from above.

⑫ Attach the wiring module for connecting the main current paths to contactors Q13 and Q12 from below (d).

⑬ Screw the wiring modules tight with a screwdriver.

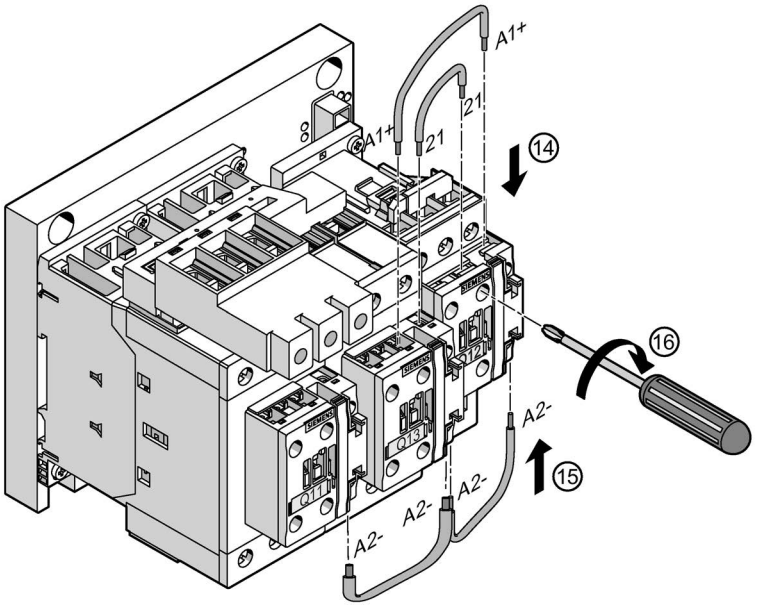

⑭/⑮ To connect the control current paths, push the conductors into the contactor terminals.
To connect the coil contacts, push the conductors into the contactor terminals.

⑯ Screw the terminals tight with a screwdriver.

Assembling the contactor assembly for star-delta (wye-delta) start with screw-type connection - size S2-S2-S2

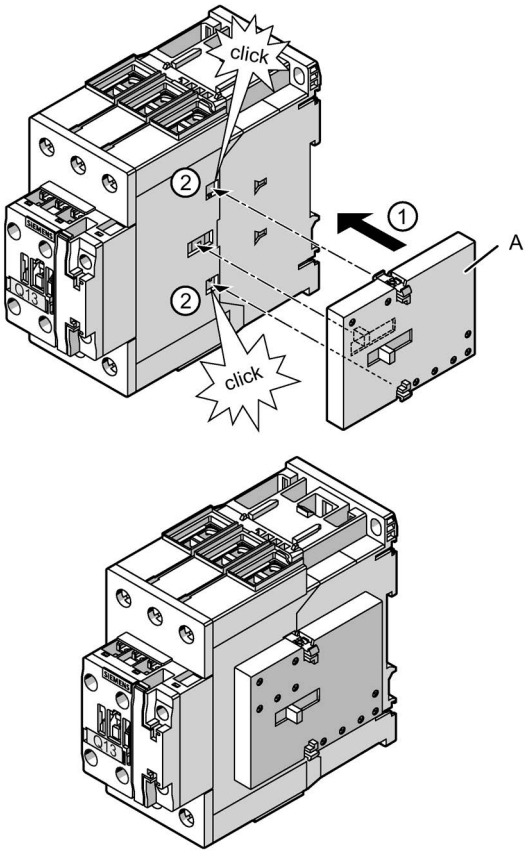

①/② Insert the mechanical interlock (3RA2934-2B) into the opening on the right-hand side of contactor Q13.

Optional component A (mechanical interlock) is mandatory for mechanical interlocking.

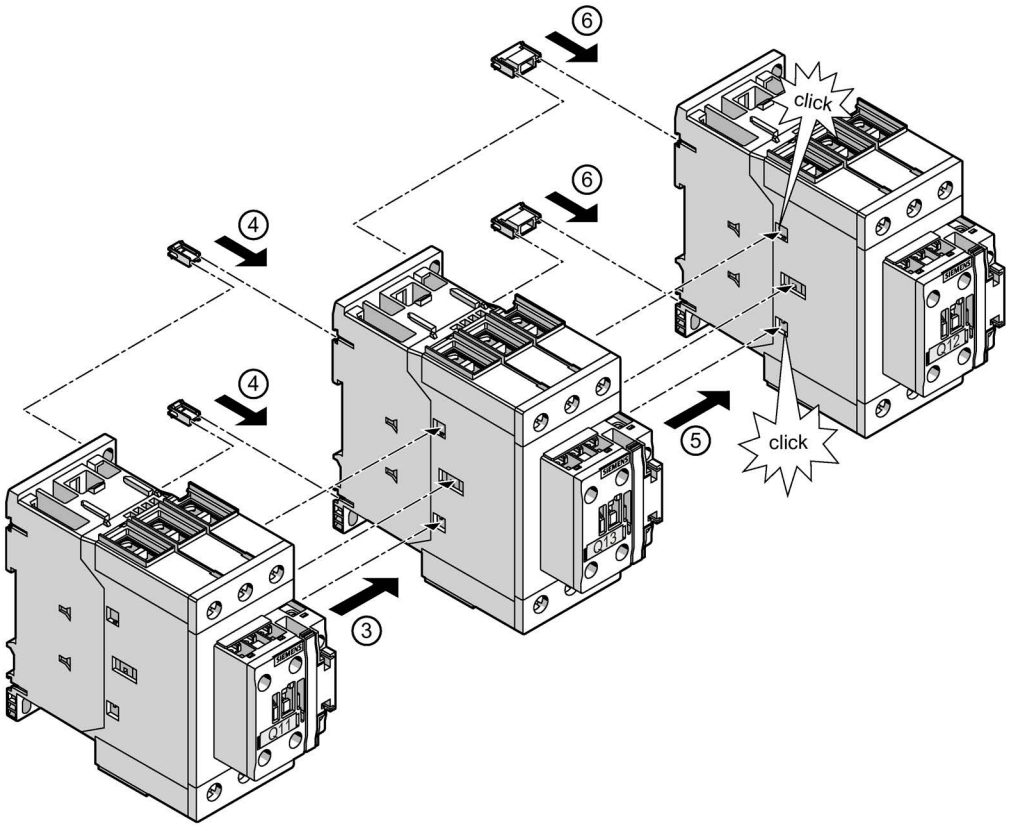

③ Connect contactors Q11 and Q13 together.
④ Insert the connection clips into the openings on contactors Q11 and Q13.
⑤ Connect contactors Q13 and Q12 together.
⑥ Insert the connection clips into the openings on contactors Q13 and Q12.

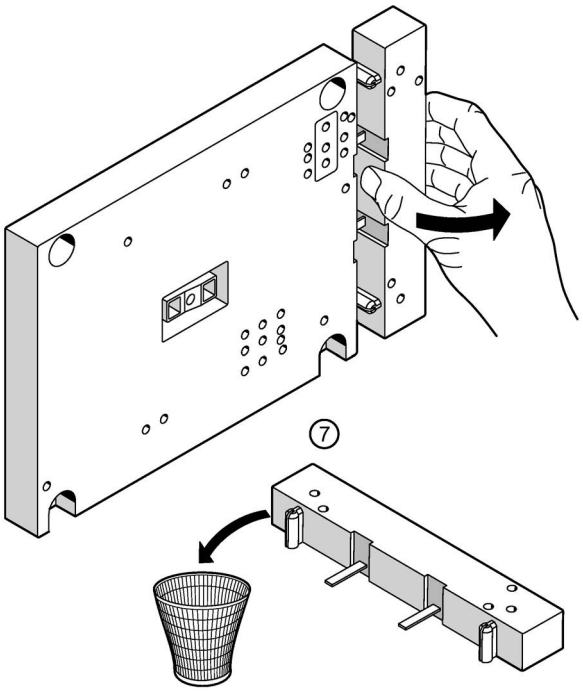

⑦ When using the mounting plate (for S2 3RA2932-2F; for S3 3RA2942-2F), you must remove its side section.
(Note: The side section is required when mounting the 3RP25 or 3RP15 timing relay.)

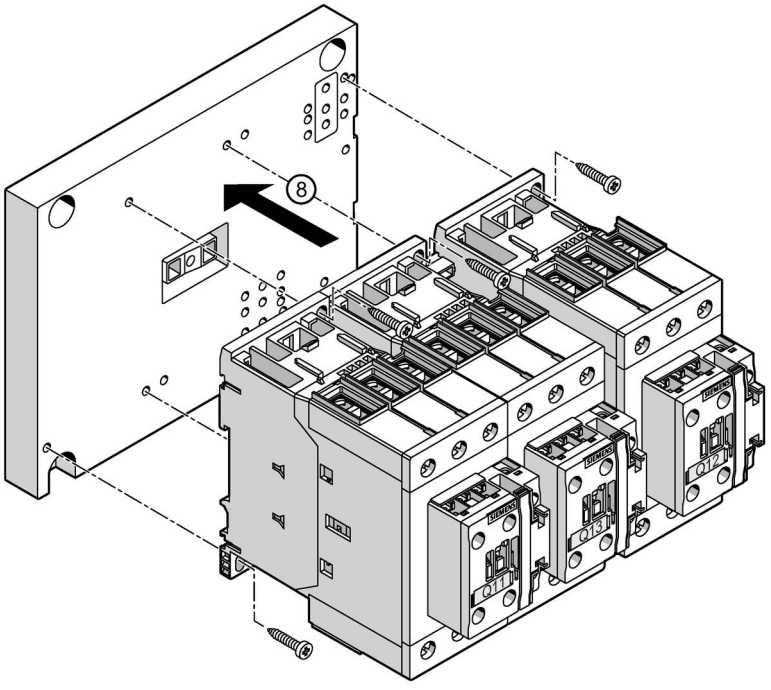

⑧ Mount the contactors on the mounting plate.
Screws: 6 x M6
Tightening torque: 1.6 Nm

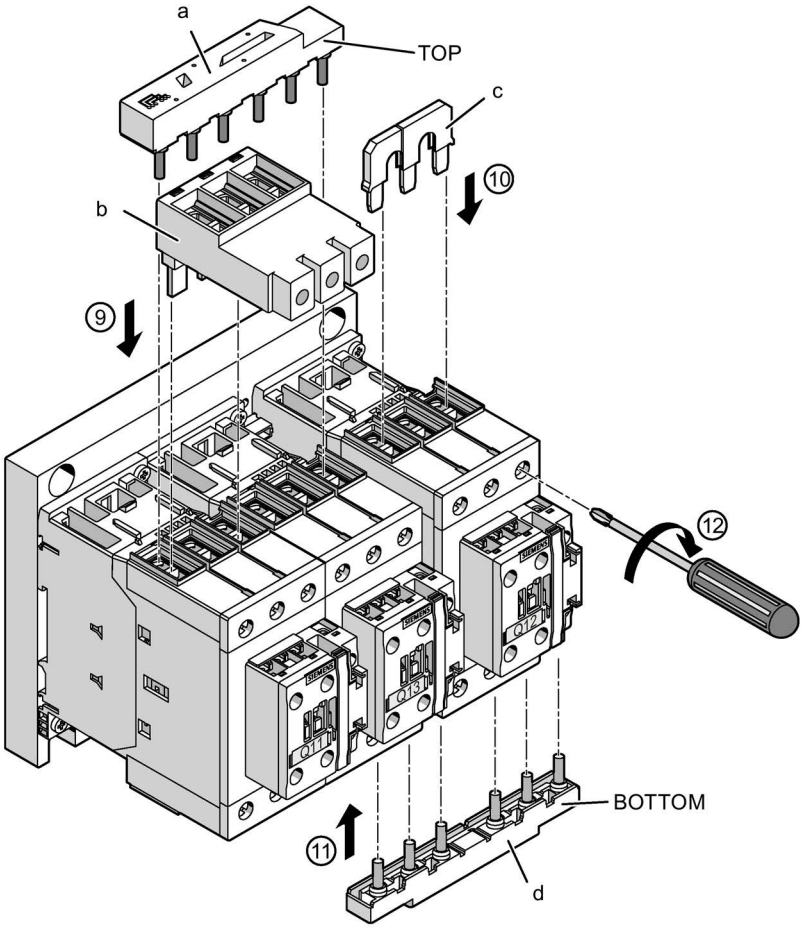

⑨ Attach the wiring module for connecting the main current paths to contactors Q11 and Q13 from above (a).

You can use the 3-phase infeed terminal (b) optionally for size S2.

⑩ Attach the neutral bridge (c) to contactor Q12 from above.

⑪ Attach the wiring module for connecting the main current paths to contactors Q13 and Q12 from below (d).

⑫ Screw the terminals tight with a screwdriver.

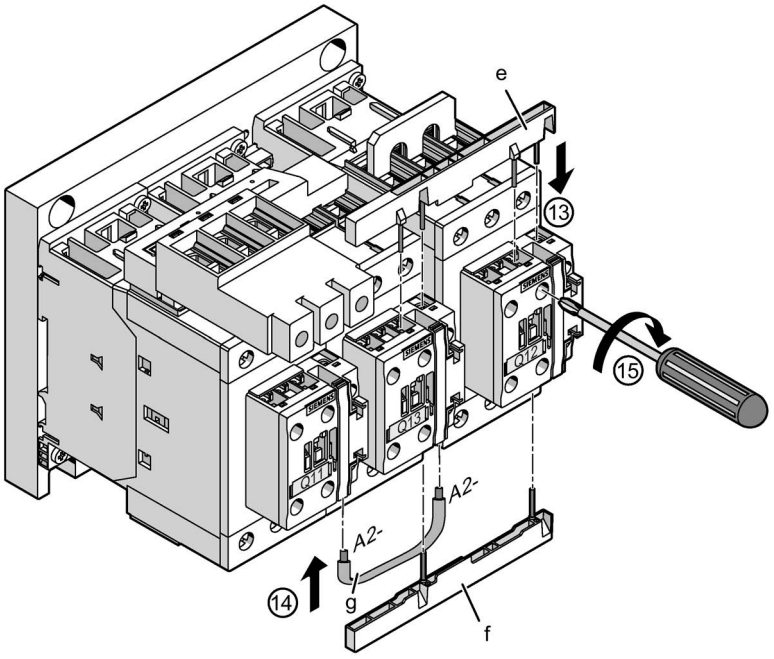

⑬ Attach the wiring module for connecting the control current paths to contactors Q13 and Q12 from above (e).

⑭ Attach the wiring module for connecting the control current paths to contactors Q13 and Q12 from below (f).

To connect the coil contacts, push the conductors into the terminals of contactors Q11 and Q13.

⑮ Screw the terminals tight with a screwdriver.

Assembling the contactor assembly for star-delta (wye-delta) start with spring-loaded connection - size S2-S2-S2

The mechanical interlock, the connecting clips and the wiring modules for connecting the main current paths are mounted (steps 1-12) in the same way as described for size S2-S2-S2 with screw-type connection.

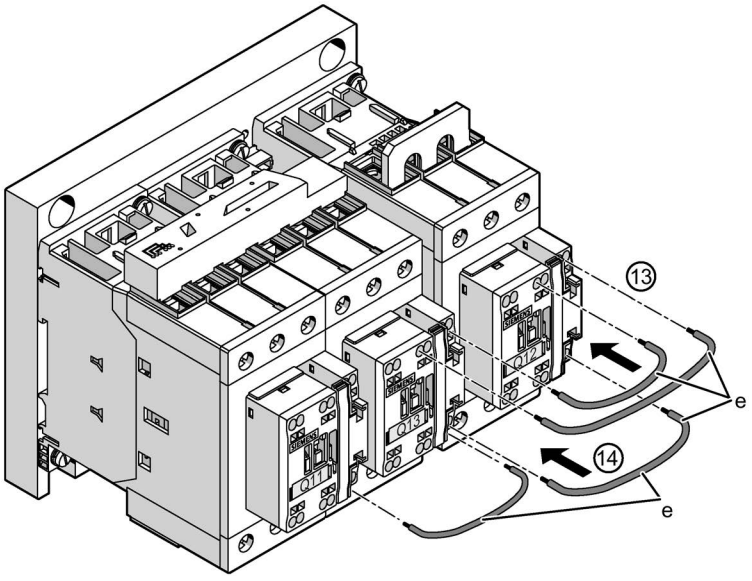

⑬/⑭ To connect the control current paths, push the conductor (e) into the contactor terminals. To connect the coil contacts, push the conductors (e) into the contactor terminals.

8.28.5 Mounting size S3

The contactor assemblies for star-delta (wye-delta) start can be built from contactors with screw connections or spring-loaded connections:

- Line contactor (Q11): Left
- Delta contactor (Q13): Center
- Star contactor (Q12): Right

This arrangement applies for all installation instructions described in this chapter.

Mounting the contactor assembly for star-delta (wye-delta) start with screw-type connection system - size S3-S3-S2

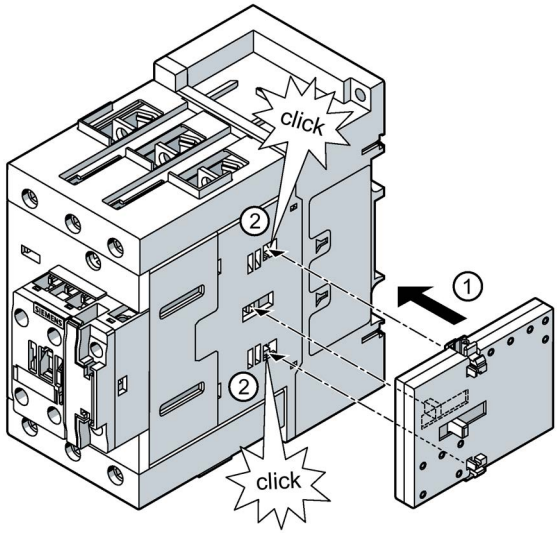

①/② Insert the mechanical interlock (3RA2934-2B) into the opening on the right-hand side of contactor Q11.

Optional component A (mechanical interlock) is mandatory for mechanical interlocking.

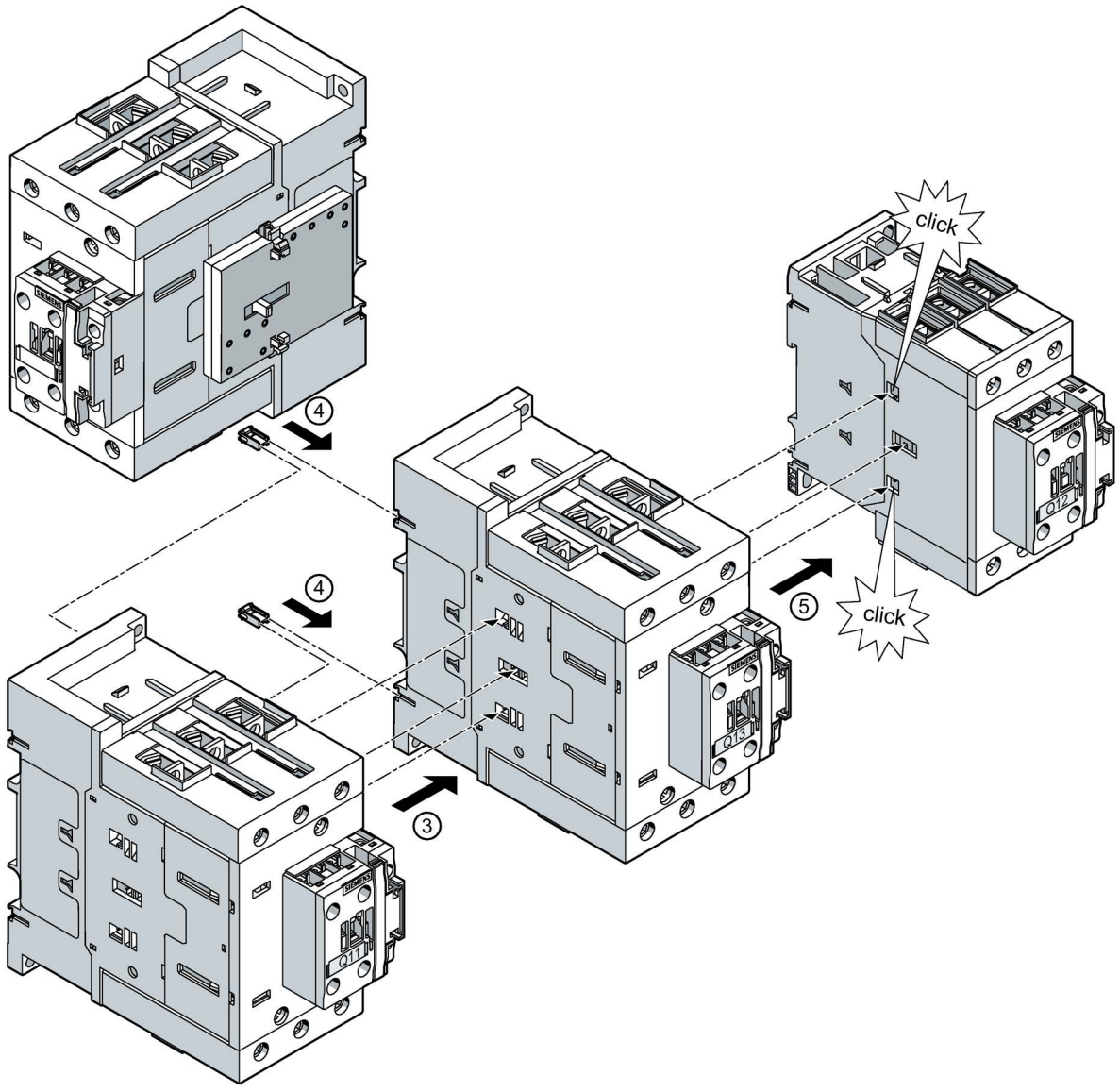

③ Connect contactors Q11 and Q13 together.
④ Insert the connection clips into the openings on contactors Q11 and Q13.
⑤ Connect contactors Q13 and Q12 together.

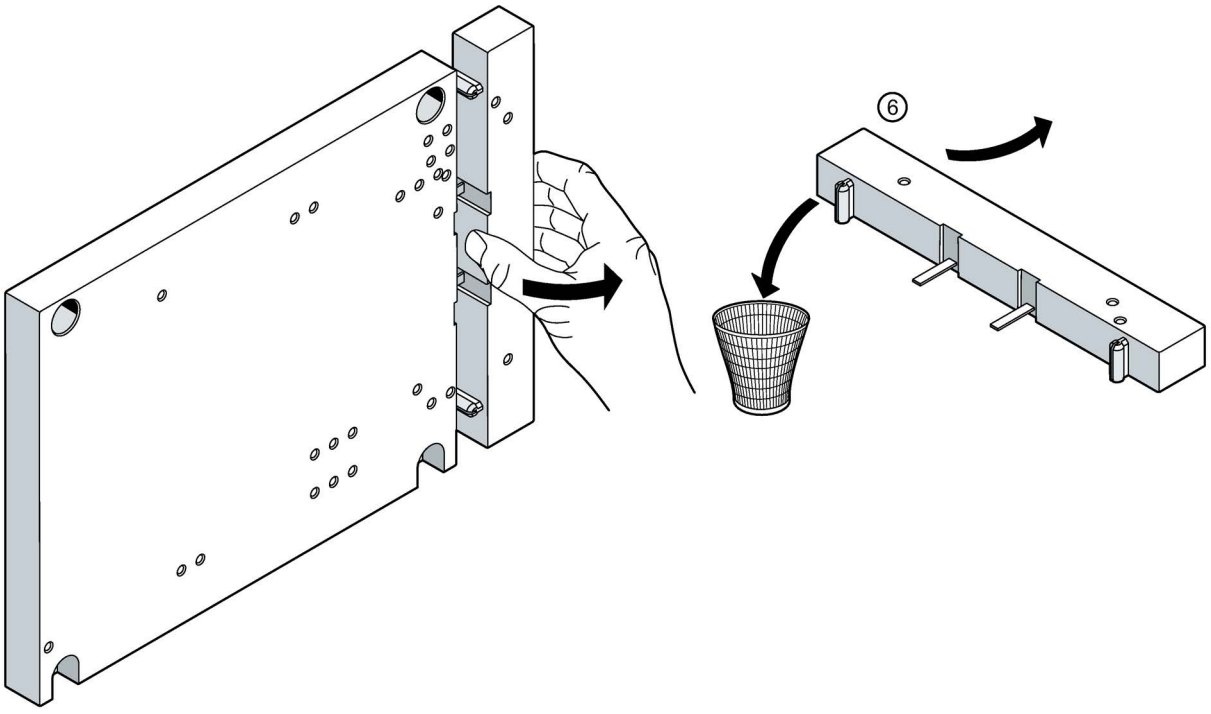

⑥ When using the mounting plate (for S2 3RA2932-2F; for S3 3RA2942-2F), you must remove its side section. (Note: The side section is required when mounting the 3RP25 or 3RP15 timing relay.)

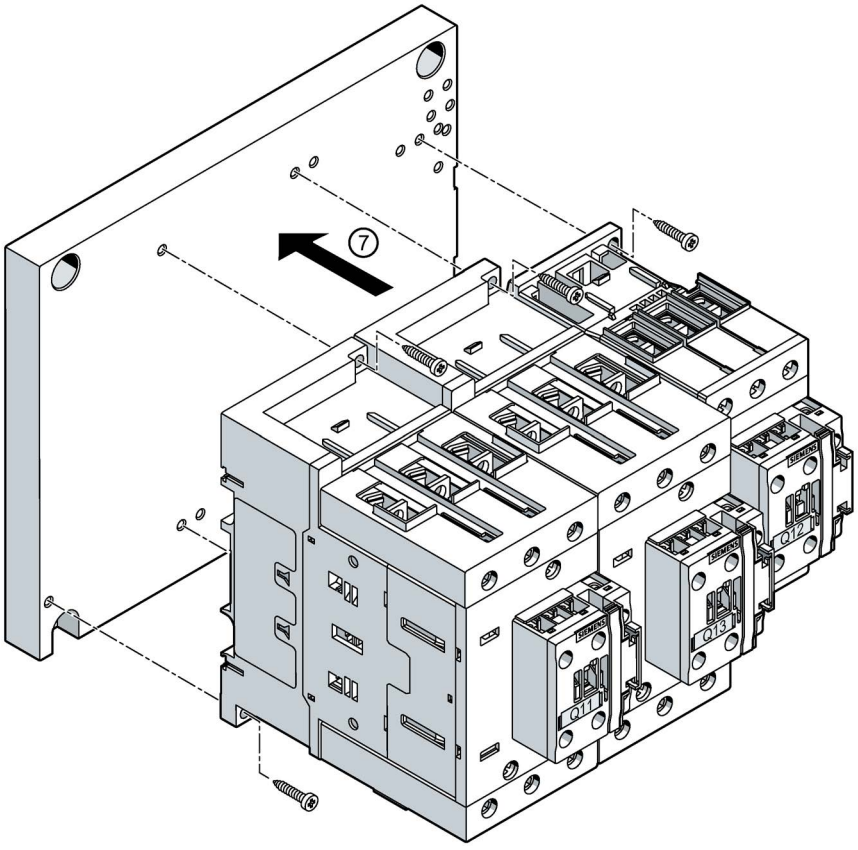

⑦ Mount the contactors on the mounting plate.
Screws: 6 x M6
Tightening torque: 1.6 Nm

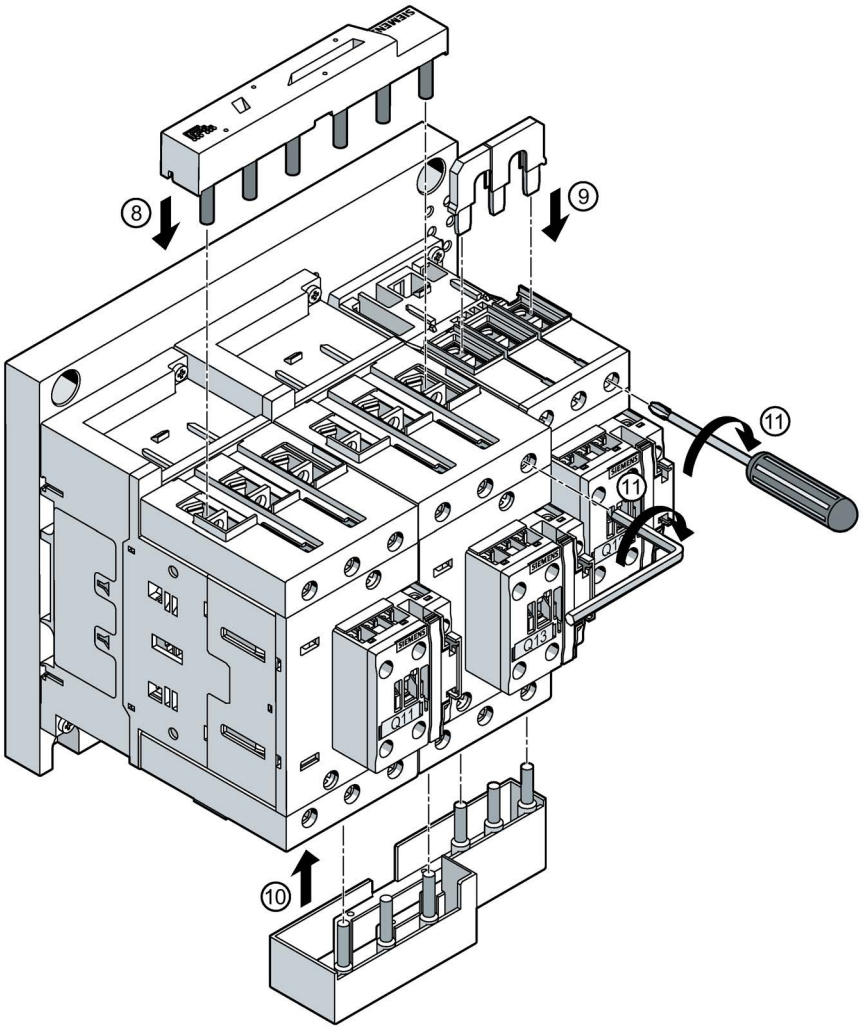

⑧ Attach the wiring module for connecting the main current paths to contactors Q11 and Q13 from above.

⑨ Attach the neutral bridge to contactor Q12 from above.

⑩ Attach the wiring module for connecting the main current paths to contactors Q13 and Q12 from below.

⑪ Screw the wiring modules in place.

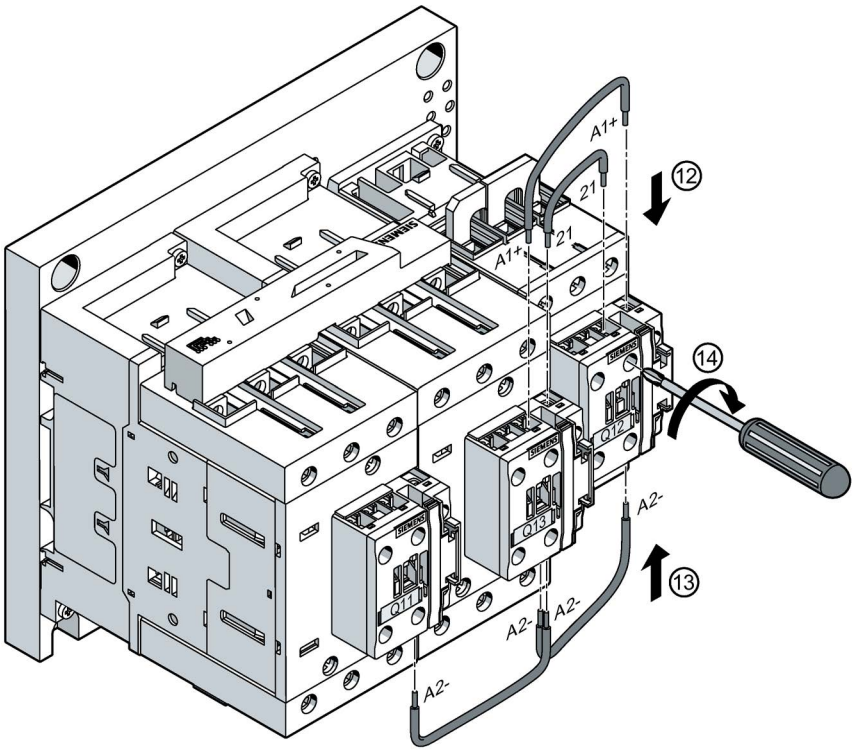

⑫/⑬ To connect the control current paths, push the conductors into the contactor terminals.
To connect the coil contacts, push the conductors into the contactor terminals.

⑭ Screw the terminals tight with a screwdriver.

Mounting the contactor assembly for star-delta (wye-delta) start with screw-type connection system - size S3-S3-S3

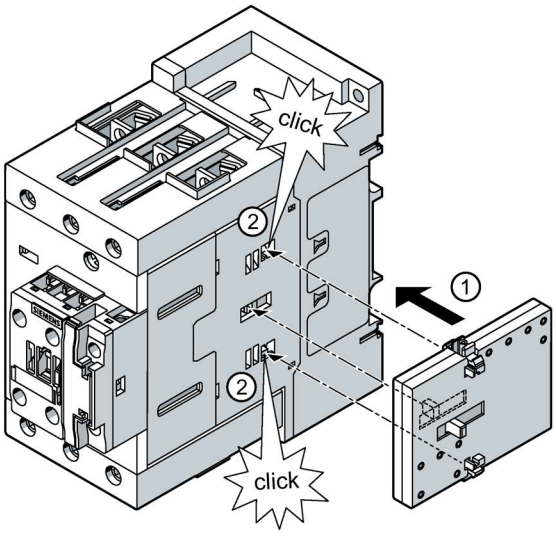

①/② Insert the mechanical interlock (3RA2934-2B) into the opening on the right-hand side of contactor Q11.

Optional component A (mechanical interlock) is mandatory for mechanical interlocking.

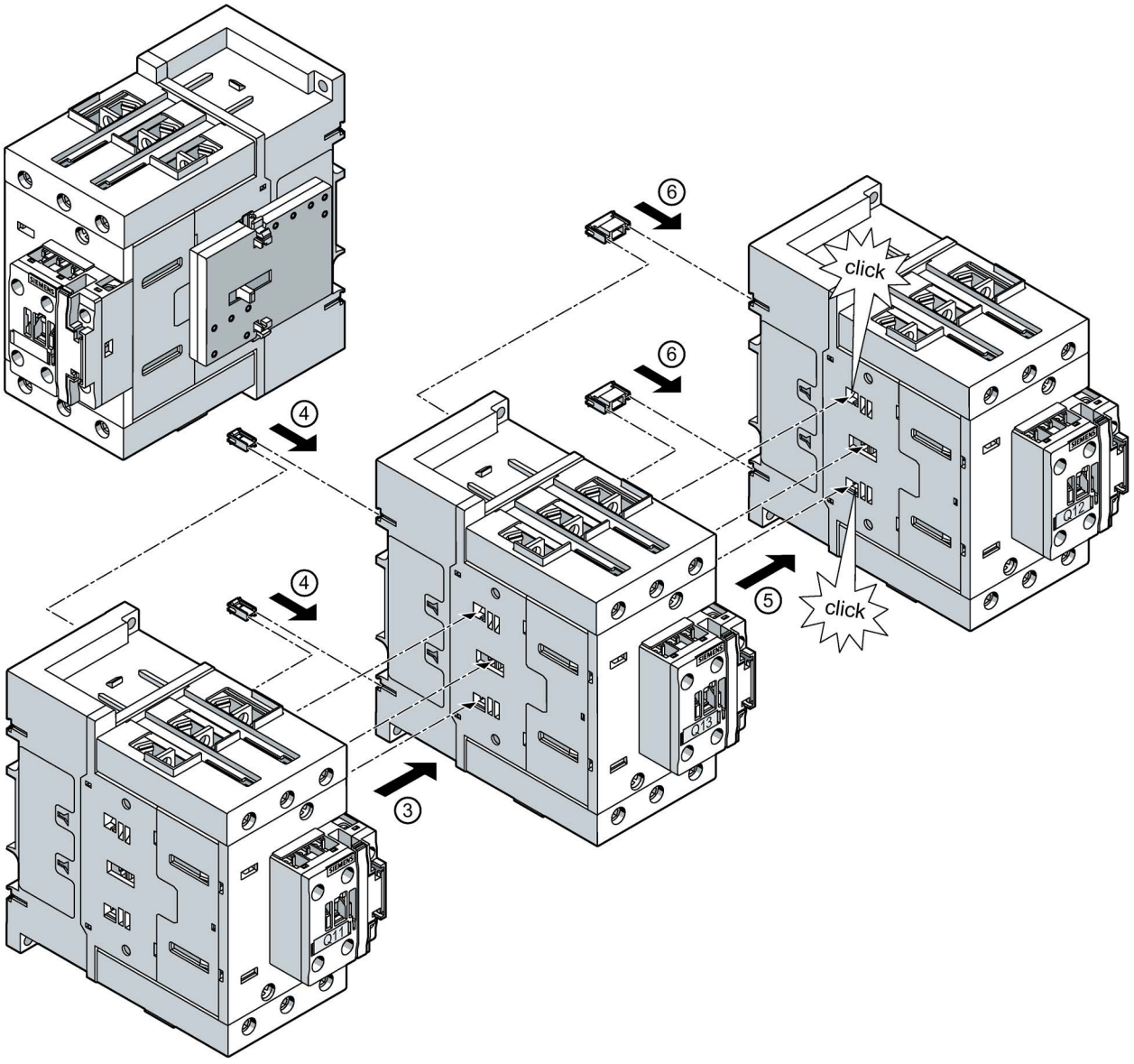

③ Connect contactors Q11 and Q13 together.
④ Insert the connection clips into the openings on contactors Q11 and Q13.
⑤ Connect contactors Q13 and Q12 together.
⑥ Insert the connection clips into the openings on contactors Q13 and Q12.

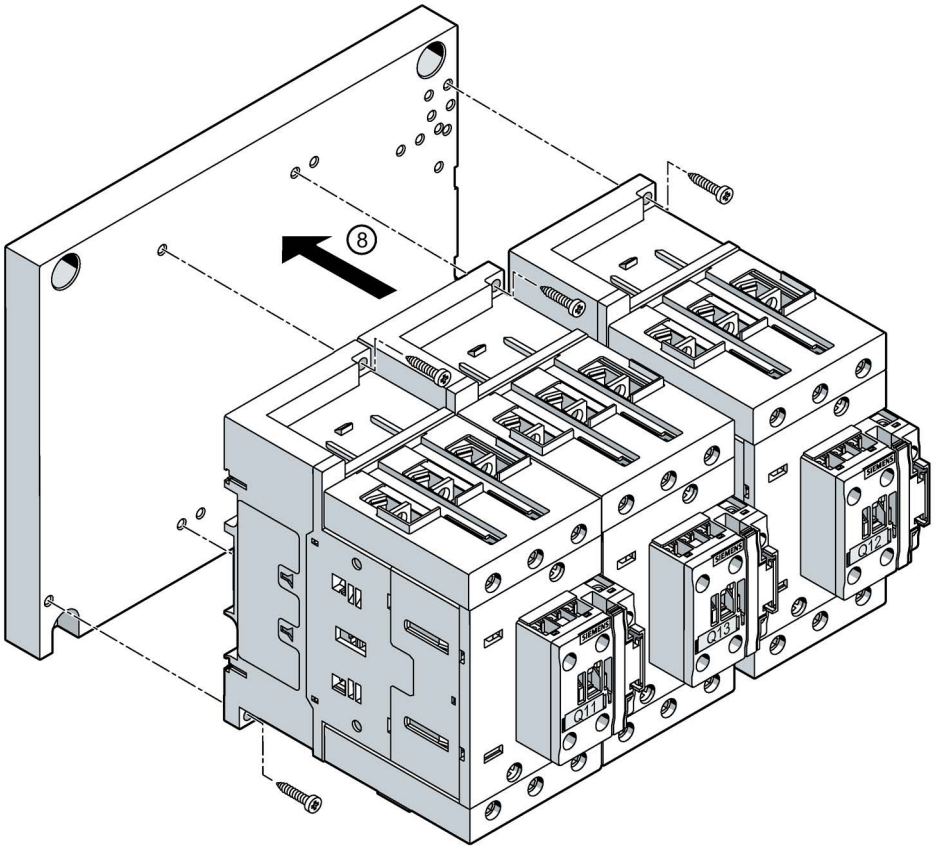

⑧ Mount the contactors on the mounting plate.
Screws: 6 x M6
Tightening torque: 1.6 Nm

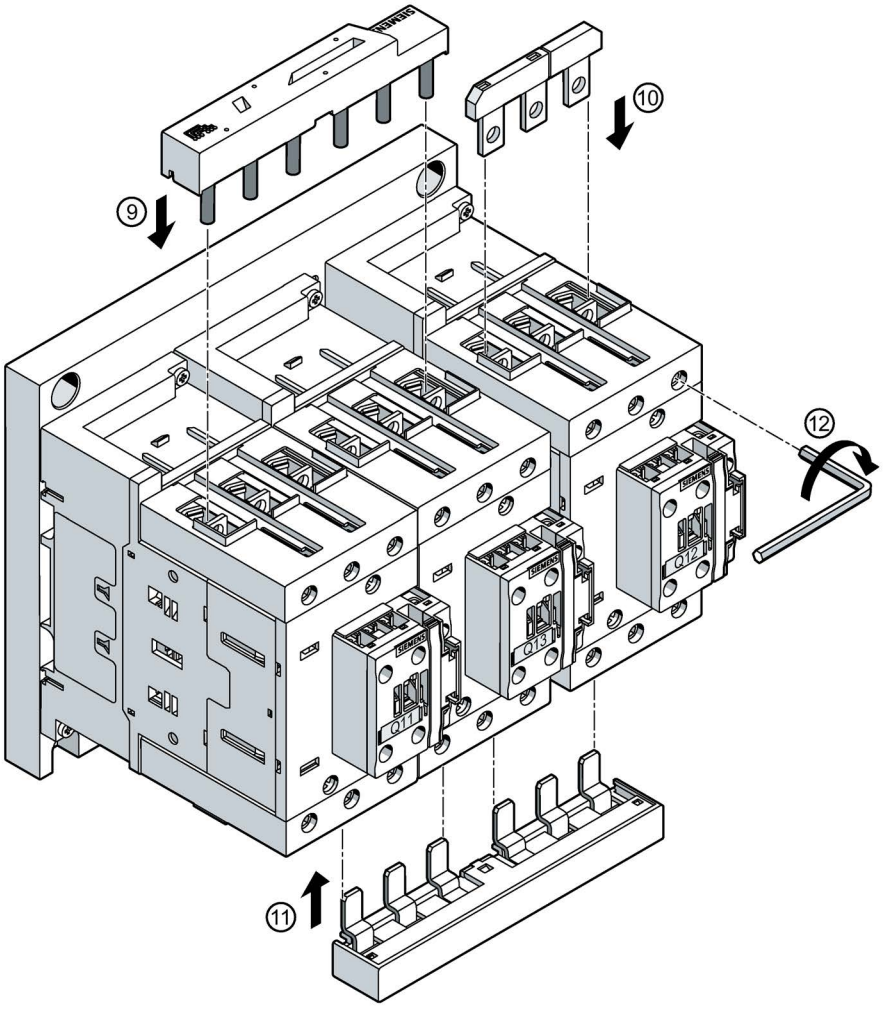

⑨ Attach the wiring module for connecting the main current paths to contactors Q11 and Q13 from above.

You can use 3 x the 1-phase infeed terminal optionally for size S3.

⑩ Attach the neutral bridge to contactor Q12 from above.

⑪ Attach the wiring module for connecting the main current paths to contactors Q13 and Q12 from below.

⑫ Screw the terminals tight with a screwdriver.

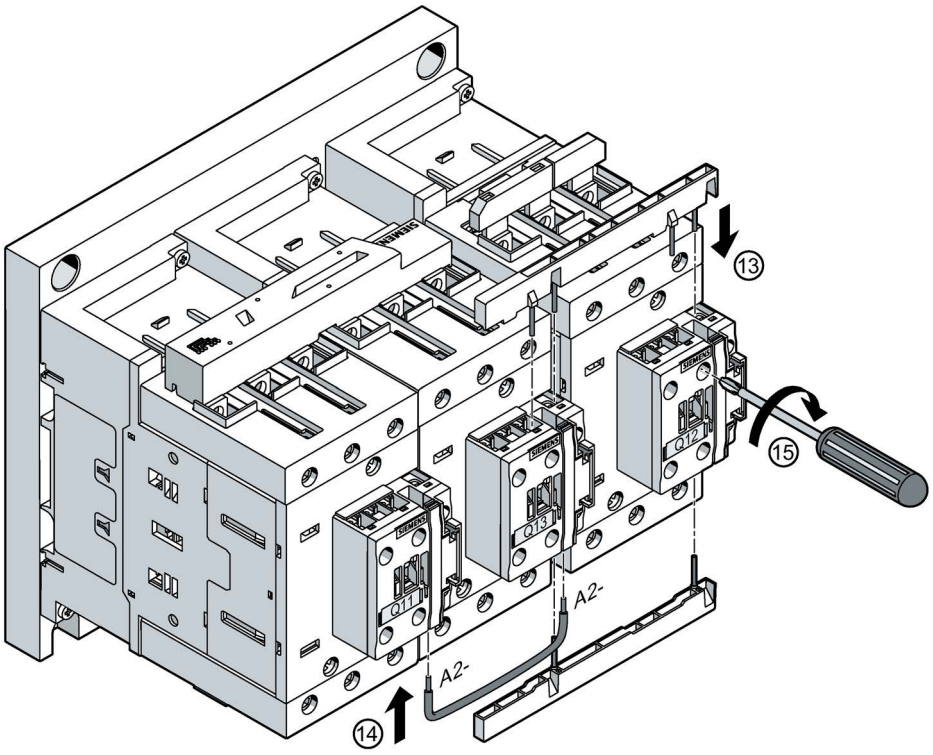

⑬ Attach the wiring module for connecting the control current paths to contactors Q13 and Q12 from above.

⑭ Attach the wiring module for connecting the control current paths to contactors Q13 and Q12 from below.

To connect the coil contacts, push the conductors into the terminals of contactors Q11 and Q13.

⑮ Screw the terminals tight with a screwdriver.

Mounting the contactor assembly for star-delta (wye-delta) start with spring-loaded connection - size S3-S3-S3

The mechanical interlock, the connecting clips and the wiring modules for connecting the main current paths are mounted (steps 1-12) in the same way as described for size S3-S3-S3 with screw-type connection system.

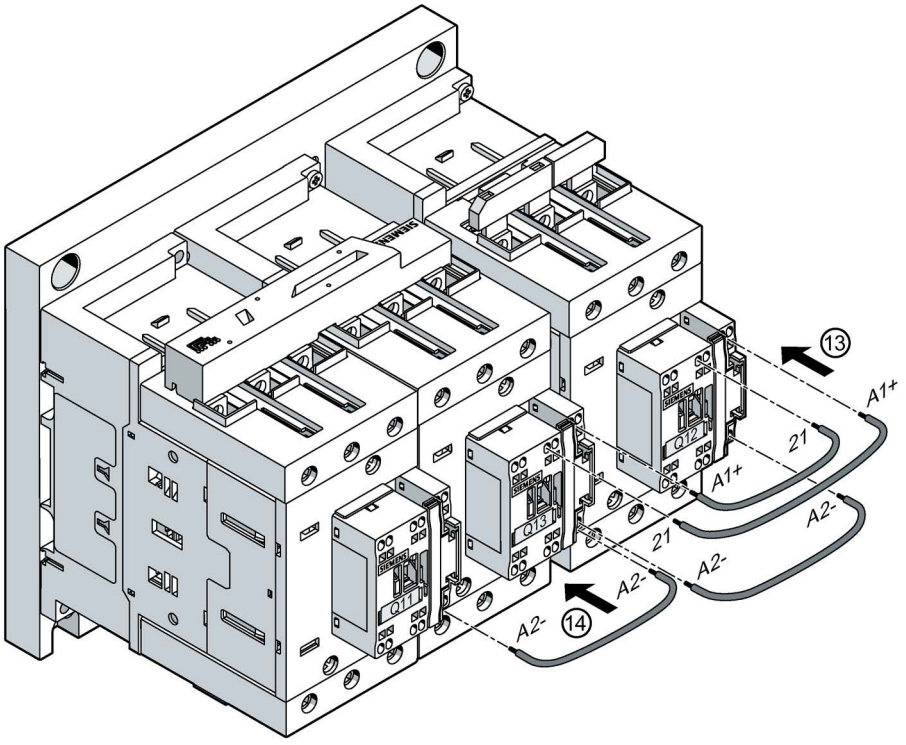

⑬ To connect the control current paths, push the conductor (e) into the contactor terminals.
To connect the coil contacts, push the conductors (e) into the contactor terminals.

8.29 Wiring kit for contactor assemblies for star-delta (wye-delta) start (sizes S6 to S12).

8.29.1 Description

The contactor assemblies for star-delta (wye-delta) start are available as kits for self-assembly.

The same accessories as for the basic units of the corresponding size can be used.

The kit for contactor assemblies for star-delta (wye-delta) start contains the following:

- Neutral bridges
- Wiring module on the bottom (wiring module on the top is not included in the scope of supply. A double infeed between the line contactor and the delta contactor is recommended.)

Article numbers:

- S6-S6-S6: 3RA1953-2B
- S6-S6-S6: 3RA1953-2N
- S10-S10-S10: 3RA1963-2B
- S12-S12-S12: 3RA1973-2B

The following accessories for the basic units can also be used for the contactor assemblies for star-delta (wye-delta) starting:

- Auxiliary switch blocks (on the front, on the side)
- Surge suppressors
- Solid-state time-delay auxiliary switch blocks with star-delta (wye-delta) function (timing relay)

In addition, special accessories are available for the contactor assemblies for star-delta (wye-delta) start:

- Neutral bridges (parallel connectors)
  - S6 (article number: 3RT1956-4BA31)
  - S10, S12 (article number: 3RT1966-4BA31)
- Mechanical connector (article number: 3RA1932-2D)
- Wiring modules
  - S6 (article number: 3RA1953-3D)
- Base plates for contactor assemblies for star-delta (wye-delta) start
  - S6-S6-S3: (Article number: 3RA1952-2E)
  - S6-S6-S6: (Article number: 3RA1952-2F)
  - S10-S10-S6: (Article number: 3RA1962-2E)
  - S10-S10-S10: (Article number: 3RA1962-2F)
  - S12-S12-S10: (Article number: 3RA1972-2E)
  - S12-S12-S12: (Article number: 3RA1972-2F)

8.29.2 Mounting size S6

The contactor assemblies for star-delta (wye-delta) start can be built from contactors with screw connections or spring-loaded connections:

- Line contactor (Q11): Left
- Delta contactor (Q13): Center
- Star contactor (Q12): Right

This arrangement applies for all installation instructions described in this chapter.

Mounting the contactor assembly for star-delta (wye-delta) start - size S6-S6-S6

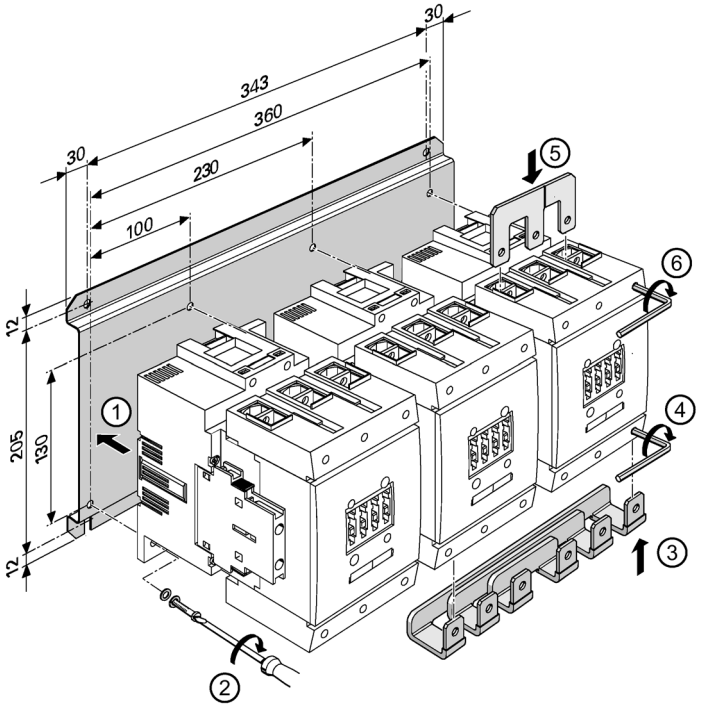

①/② Mounting the contactor assembly for star-delta (wye-delta) start on a base plate. Screws: M6 (6 x)
③ Attach the lower wiring module.
④ Tighten the main terminals.
⑤ Attach the neutral bridge.
⑥ Tighten the main terminals.

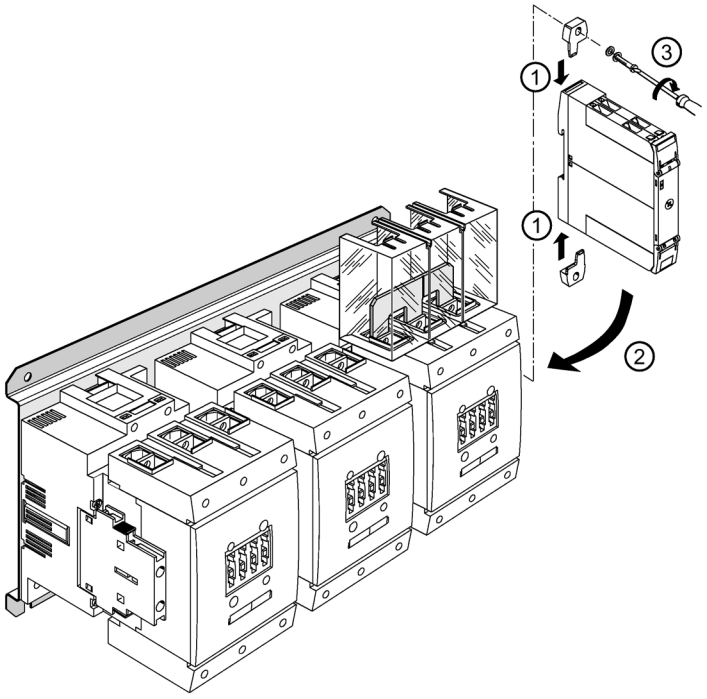

① Slide in the lugs for screw fastening on the timing relay.
②/③ Screw the timing relay tight onto the base plate.

Mounting the contactor assembly for star-delta (wye-delta) start - size S6-S6-S6 without box terminal block

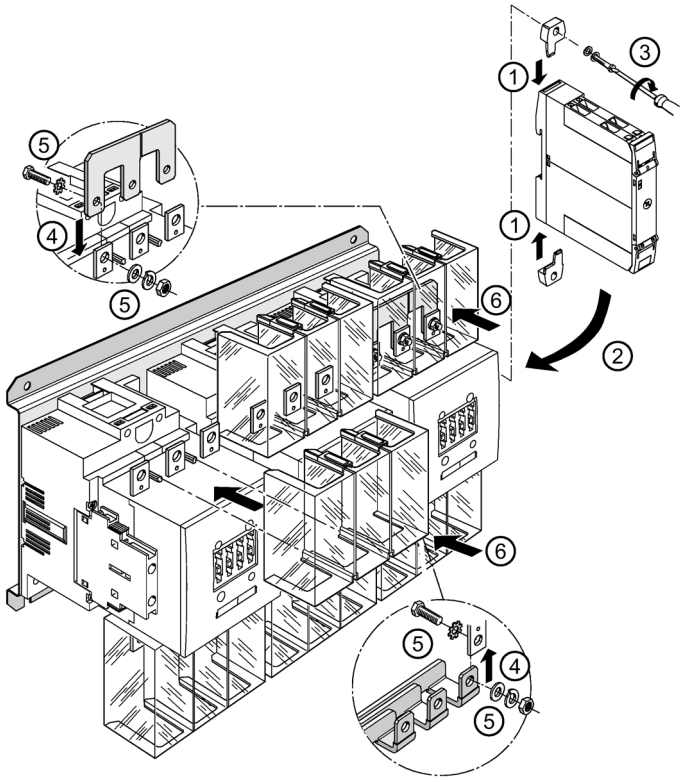

① Slide in the lugs for screw fastening on the timing relay.
②/③ Screw the timing relay tight onto the base plate.
④/⑤ Screw the lower wiring module and the neutral bridge onto the top of the connection bars.
⑥ Slide the terminal covers on.

Mounting the contactor assembly for star-delta (wye-delta) start - size S6-S6-S3

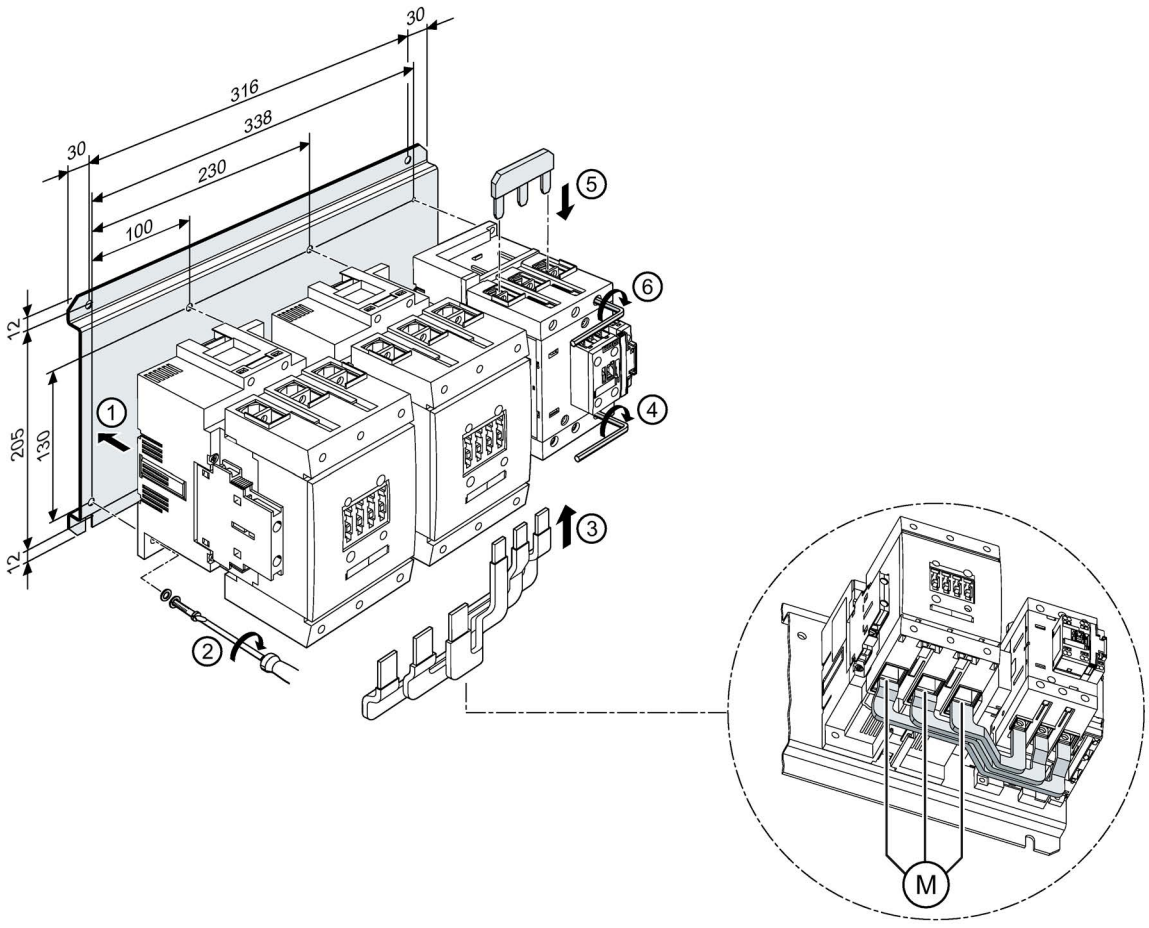

①/② Mounting the contactor assembly for star-delta (wye-delta) start on a base plate.
③ Attach the lower wiring module.
④ Tighten the main terminals.
⑤ Attach the neutral bridge.
⑥ Tighten the main terminals.

Mounting the contactor assembly for star-delta (wye-delta) start - size S6-S6-S3 (AC)

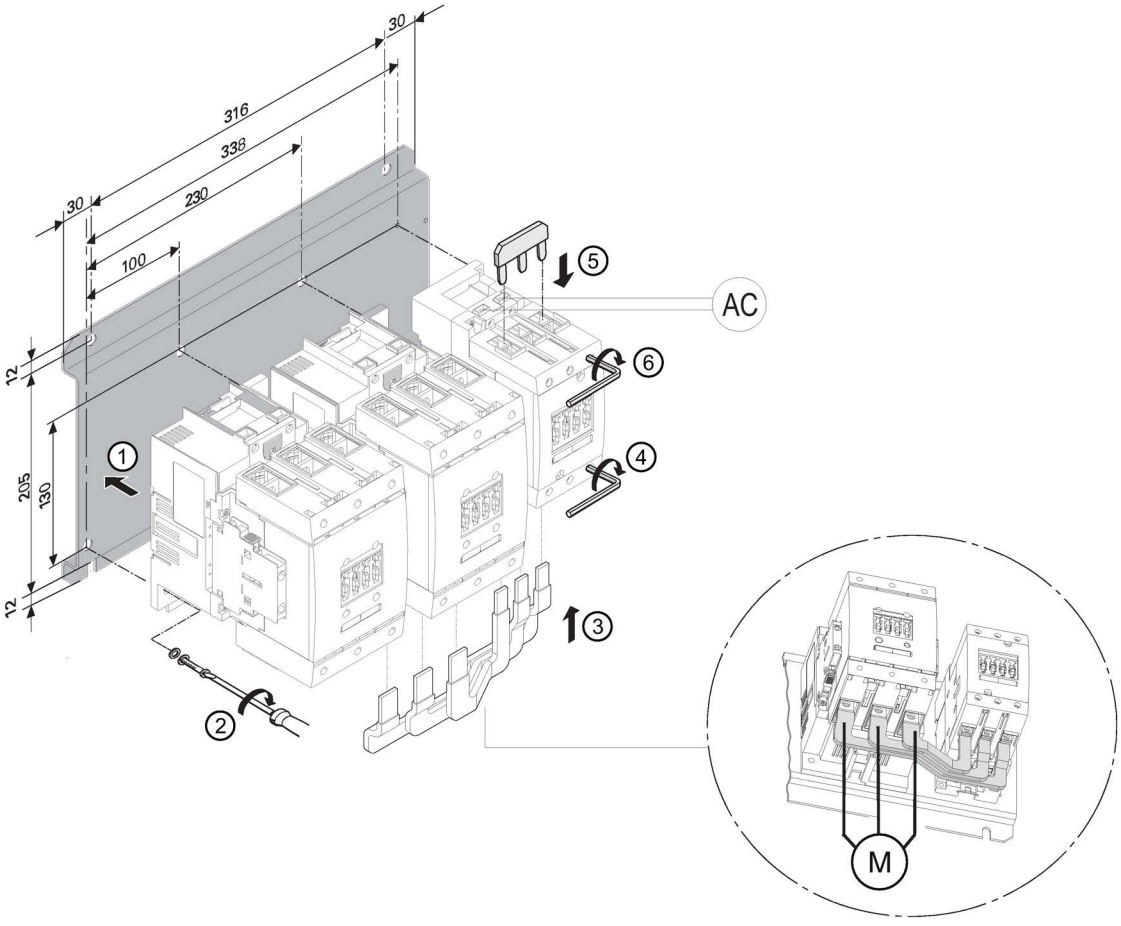

①/② Mounting the contactor assembly for star-delta (wye-delta) start on a base plate.
③ Attach the lower wiring module.
④ Tighten the main terminals.
⑤ Attach the neutral bridge.
⑥ Tighten the main terminals.

Mounting the contactor assembly for star-delta (wye-delta) start - size S6-S6-S3 (DC)

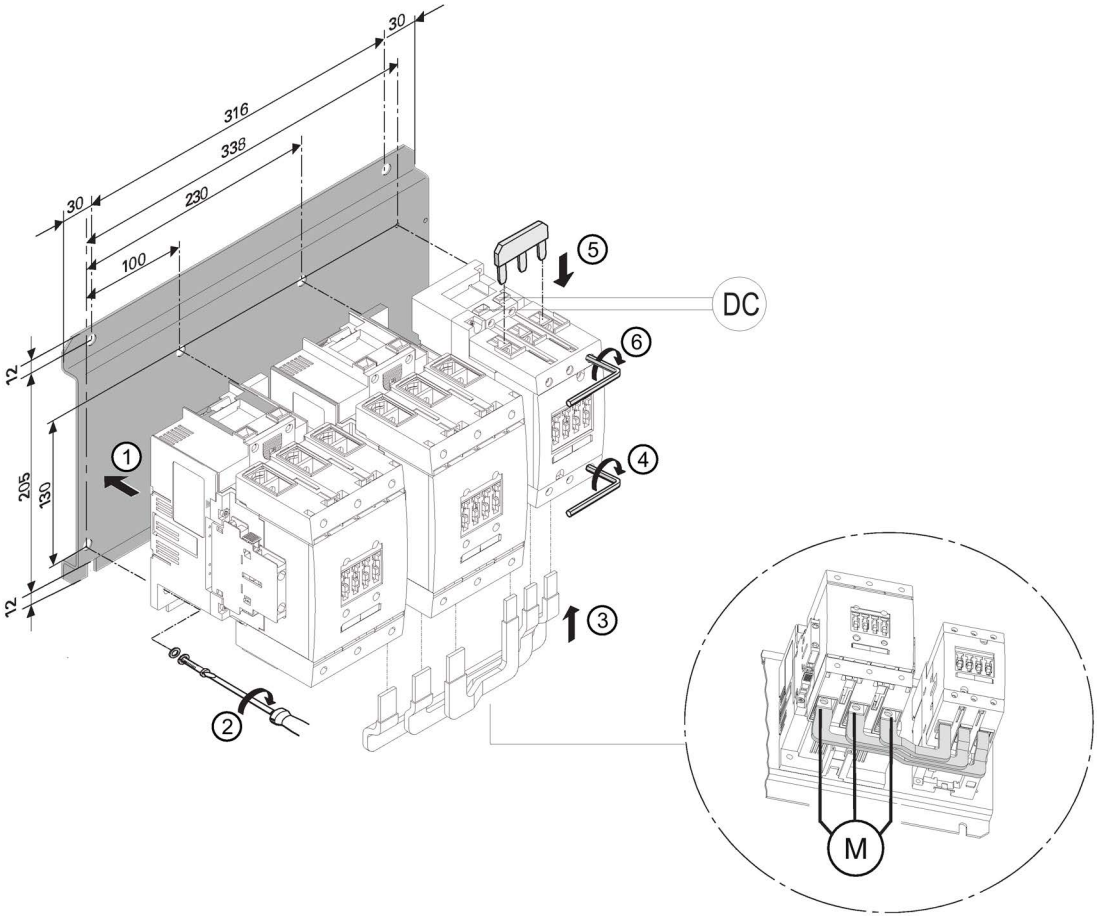

①/② Mounting the contactor assembly for star-delta (wye-delta) start on a base plate.
③ Attach the lower wiring module.
④ Tighten the main terminals.
⑤ Attach the neutral bridge.
⑥ Tighten the main terminals.

8.29.3 Mounting sizes S10 and S12

The contactor assemblies for star-delta (wye-delta) start can be built from contactors with screw connections or spring-loaded connections:

- Line contactor (Q11): Left
- Delta contactor (Q13): Center
- Star contactor (Q12): Right

This arrangement applies for all installation instructions described in this chapter.

Mounting the contactor assembly for star-delta (wye-delta) start - size S10(S12)-S10(S12)-S10(S12)

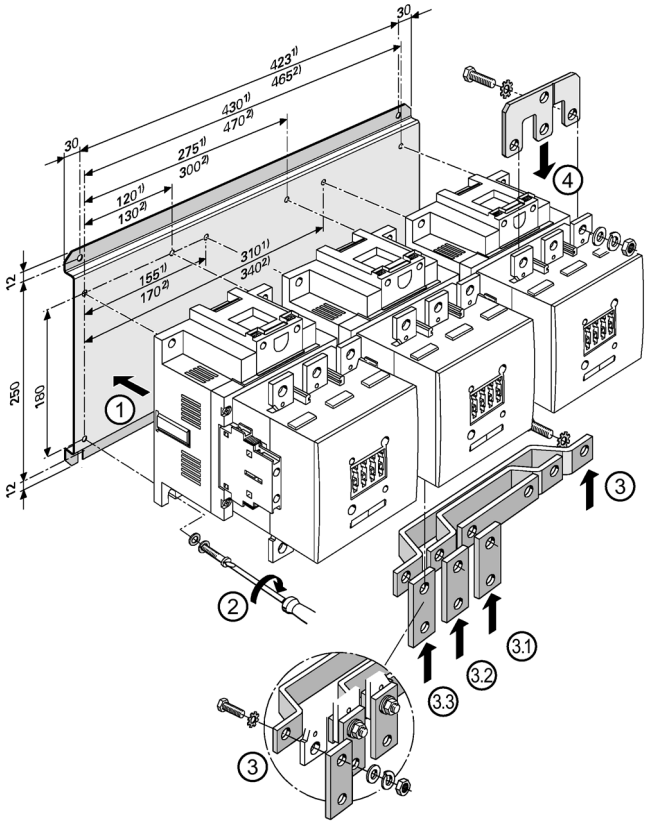

①/② Mounting the contactor assembly for star-delta (wye-delta) start on a base plate.
Screws: M8 (12 x)

③ Screw the lower wiring module onto the connection bars (3/3.1/3.2/3.3).
Screws: M10 x 35 (3 x)

④ Screw the neutral bridge onto the top of the connection bar.
Screws: M10 x 35 (3 x)

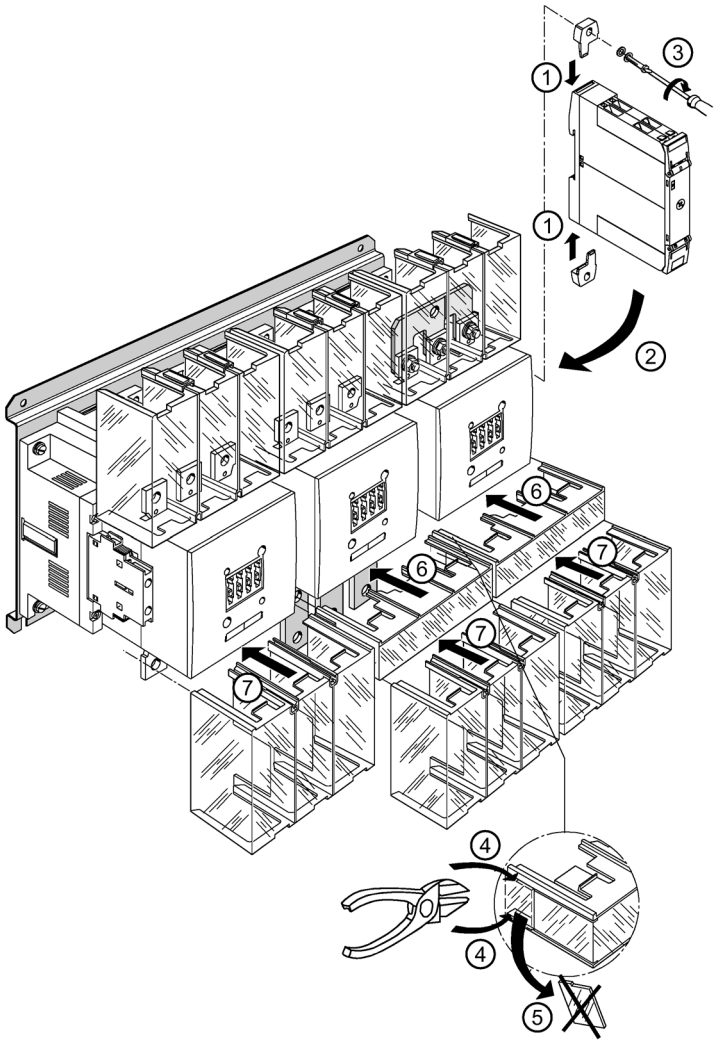

① Slide in the lugs for screw fastening on the timing relay.
②/③ Screw the timing relay tight onto the base plate.
④/⑤ Break off the extension tabs on the covers for the wiring block.
⑥/⑦ Slide the wiring module covers and the terminal covers open.

Mounting the contactor assembly for star-delta (wye-delta) start - size S10(S12)-S10(S12)-S6(S10)

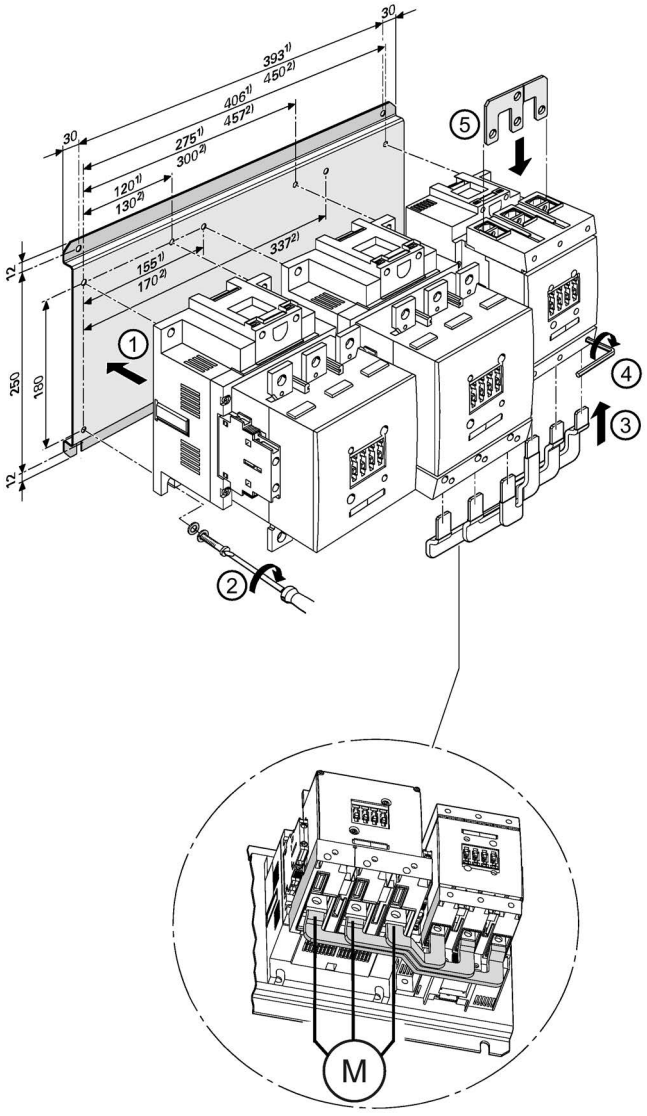

①/② Mounting the contactor assembly for star-delta (wye-delta) start on a base plate.
③ Attach the lower wiring module.
④ Tighten the main terminals.
⑤ Attach the neutral bridge.
⑥ Tighten the main terminals.

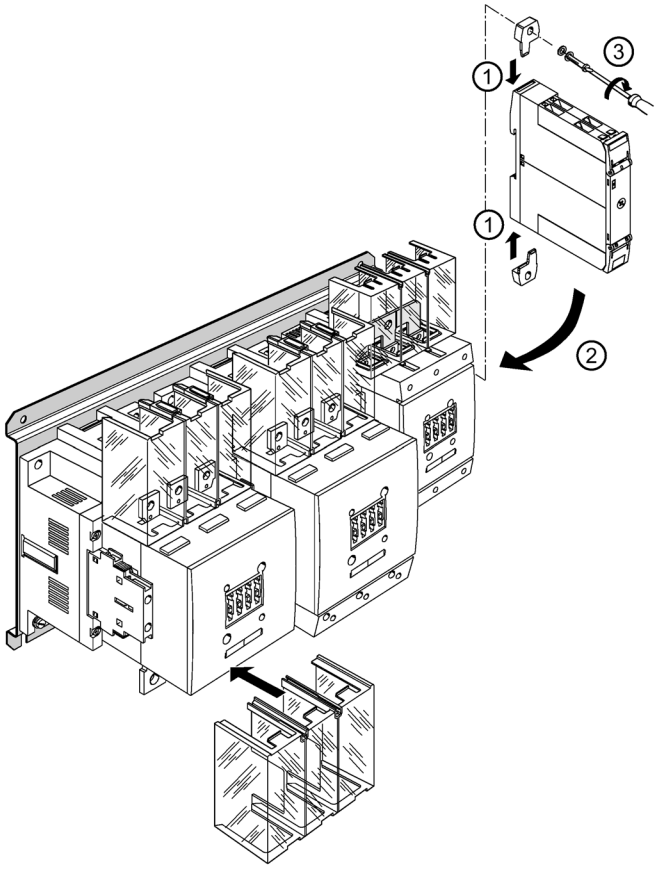

① Slide in the lugs for screw fastening on the timing relay.
②/③ Screw the timing relay tight onto the base plate.

8.30 Terminal cover for cable lug connection and busbar connection

8.30.1 Description

Terminal cover for cable lug connection and busbar connection

For 3RT contactors (size S3 to S10 / S12), there are terminal covers for cable lug connection and busbar connection.
For connection of conductors with cable lugs or connecting bars, the box terminal blocks of the devices can be detached. The terminal covers are available as touch protection and to ensure the necessary clearances and creepage distances when box terminal blocks have been removed.

Table 8- 42 Terminal covers for cable lug connection and busbar connection - For complying with the phase clearances and as touch protection if box terminal is removed

Versions	Size	Required number	Function
Terminal cover for cable lug connection and busbar connection		2 covers are required per contactor (for the upper and lower main connections)	To maintain phase clearances above defined connection cross-sections, offers touch protection.
• 3RT1946-4EA1	S3		
• 3RT1956-4EA1	S6		
• 3RT1966-4EA1	S10 / S12		
3RT19.6-4EA3 busbar cover between contactor and 3RB10 overload relay (the 3RT1966-4EA3 for S10 and S12 serves simultaneously as an adapter for the 3RT1966-4EA1 terminal cover for contactor assemblies)	S6 to S12	1	Offers touch protection

Table 8- 43 Terminal covers for cable lug connection and busbar connection - Busbar connection cover, can be screwed onto a free end of the busbar

Size	Article number
S6	3TX6526-3B
S10 / S12	3TX6546-3B

Table 8- 44 Terminal covers for cable lug connection and busbar connection - Busbar cover between the 3RT1 contactor and the 3RB2 overload relay Busbar cover when installing contactor assemblies

Size	Article number
S6	3RT1956-4EA3
S10 / S12	3RT1966-4EA3

Table 8- 45 Terminal covers for cable lug connection and busbar connection - Busbar cover of the flat cable connector when installing reversing contactor assemblies or contactor assemblies for star-delta (wye-delta) start

Size	Article number
S6	3RT1956-4EA4

8.30.2 Mounting

Mounting the terminal cover for cable lug connection and busbar connection

The diagram below uses the 3RT2.4 contactor size S3 as an example of mounting the 3RT1946-4EA1 terminal cover for cable lug connection and busbar connection.

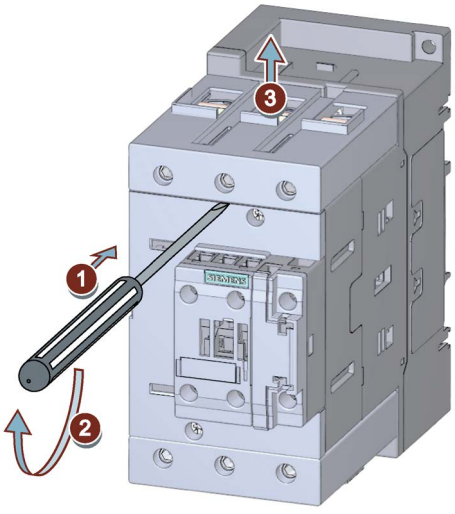

① Position the screwdriver on the terminal support, as shown in the figure, in the middle between the contactor and the removable box terminal block.
② Carefully lever the detachable box terminal block from the contactor.
③ Detach the box terminal block from the contactor in the upward direction.

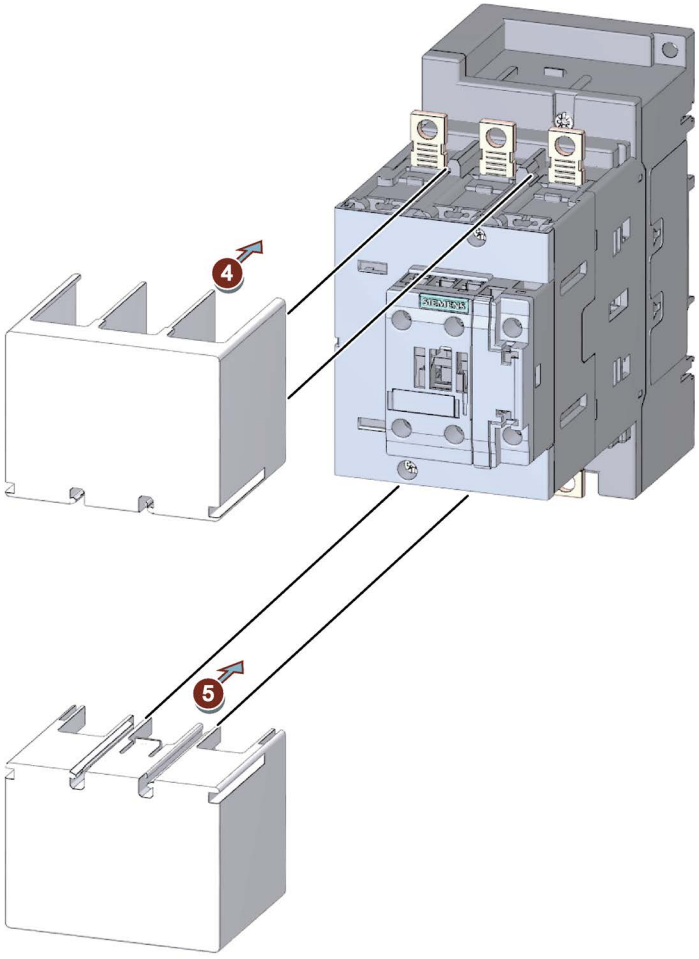

④/⑤ Slide the terminal cover for cable lug connection and busbar connection into the guide tabs provided for this on the contactor.

The terminal covers for cable lug connection and busbar connection on contactors of size S6 and S10 / S12 are mounted in the same way as described.

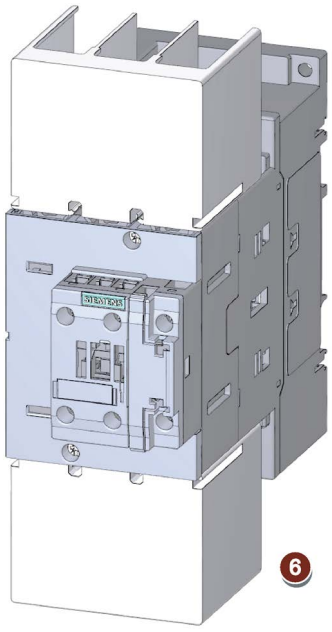

⑥ Cover ready-mounted

Mounting the 3RT19.6-4EA2 cover

Suitable for sizes S6 to S12

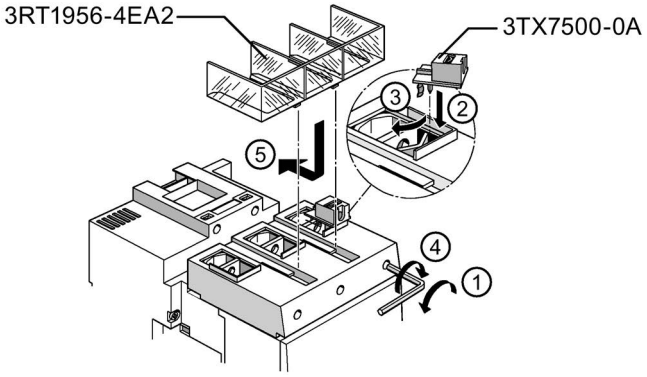

① Open the screws on the box terminal block.
② Insert the auxiliary conductor connection for box terminals into the terminal.
③ Latch the auxiliary conductor connection for box terminals.
④ Tighten the screws on the box terminal block.
⑤ The terminal cover for box terminals is inserted into the guides on the box terminal block and pushed to the back until it engages.

Mounting the 3RT19.6-4EA3 cover

Suitable for sizes S6 to S12

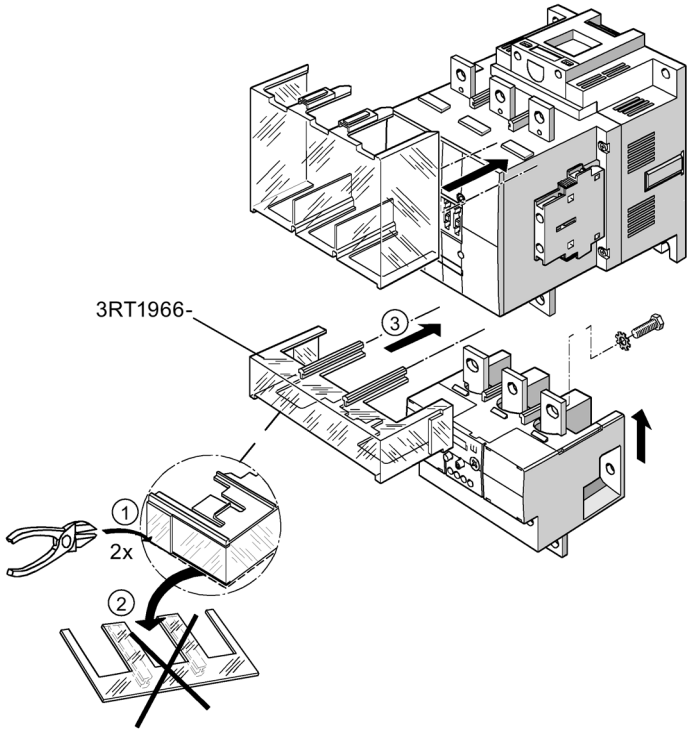

①/② For S10 and S12: Shorten the 3RT1966- 4EA3 cover before mounting (it serves simultaneously as an adapter for the 3RT1966-4EA1 terminal cover for contactor assemblies).

③ Slide the cover into the slots on the contactor.

Mounting the busbar cover between the 3RT1 contactor and the 3RB2 overload relay

The diagram below uses the 3RT1.5 contactor and the 3RB2 overload relay in size S6 as an example of mounting the 3RT1956-4EA3 terminal cover for cable lug connection and busbar connection.

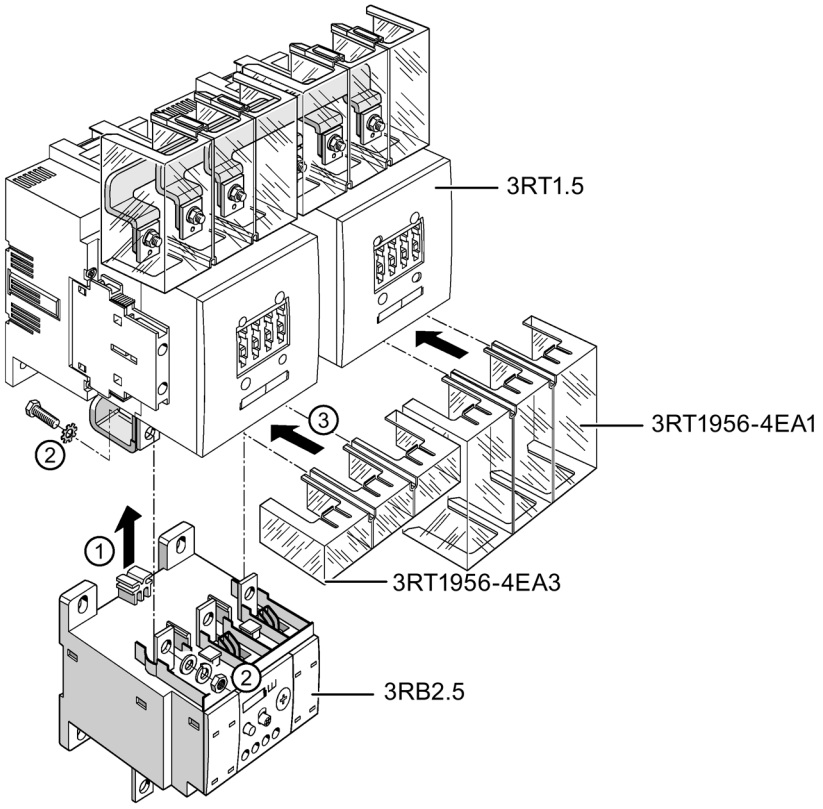

① Slide the electronic overload relay onto the contactor from below.

② Screw the electronic overload relay onto the contactor with the screws provided for this purpose.

③ As shown in the figure, slide the terminal covers for covering the busbars into the openings provided on the box terminal block of the electronic overload relay and on the contactor.

Mounting the busbar cover of the flat cable connector when installing reversing contactor assemblies or contactor assemblies for star-delta (wye-delta) start

The diagram below uses the 3RT1.5 contactor size S6 as an example of mounting the 3RT1956-4EA4 terminal cover for cable lug connection and busbar connection.

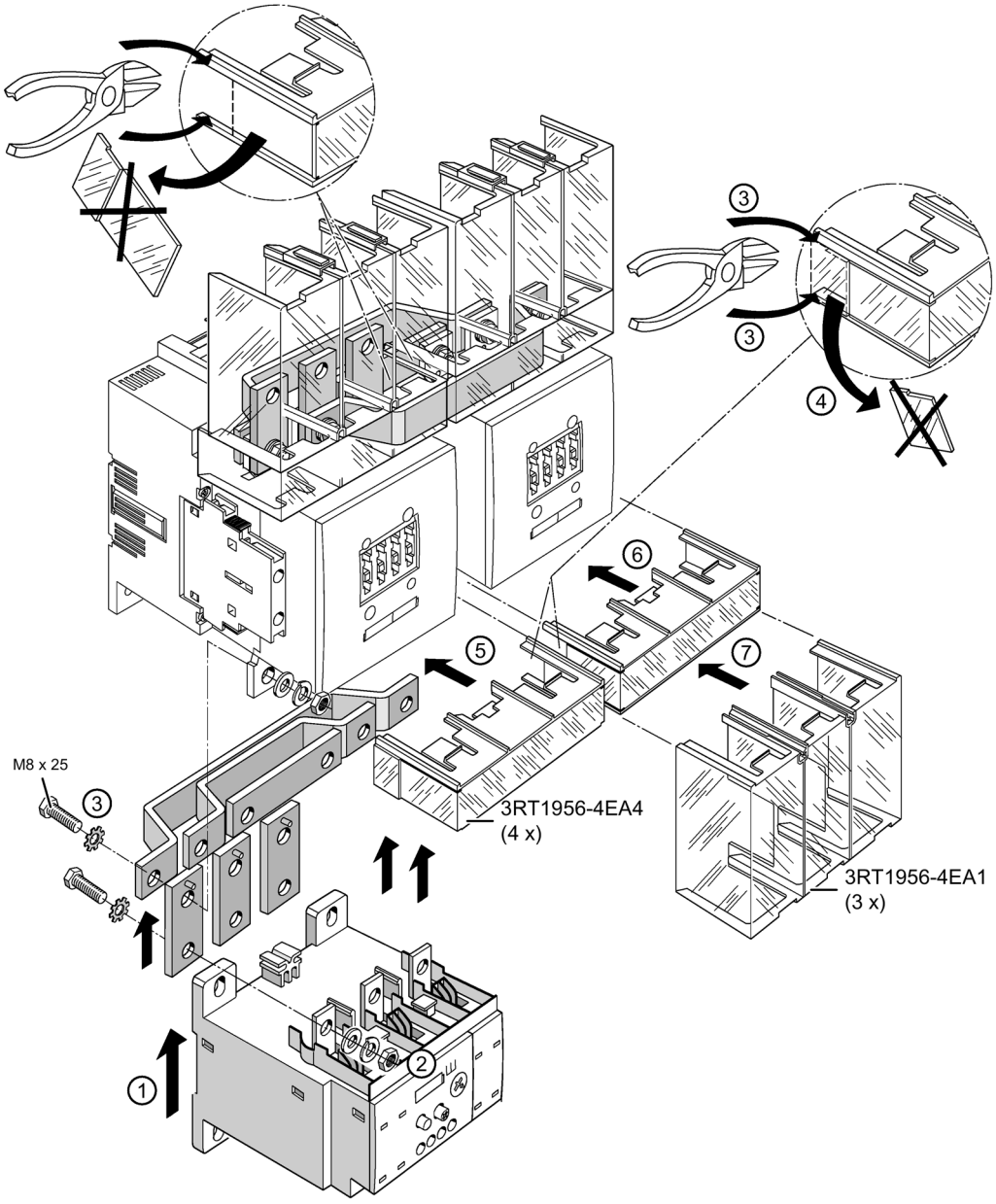

①	Slide the electronic overload relay from below onto the wiring module for connection without box terminal block.
②/③	Slide the wiring modules for connection without box terminal block onto the contactors from below. Screw the wiring modules for connection without box terminal block onto the contactors using the screws provided for this purpose.
④	
⑤/⑥/⑦	Mount the terminal covers (optional).

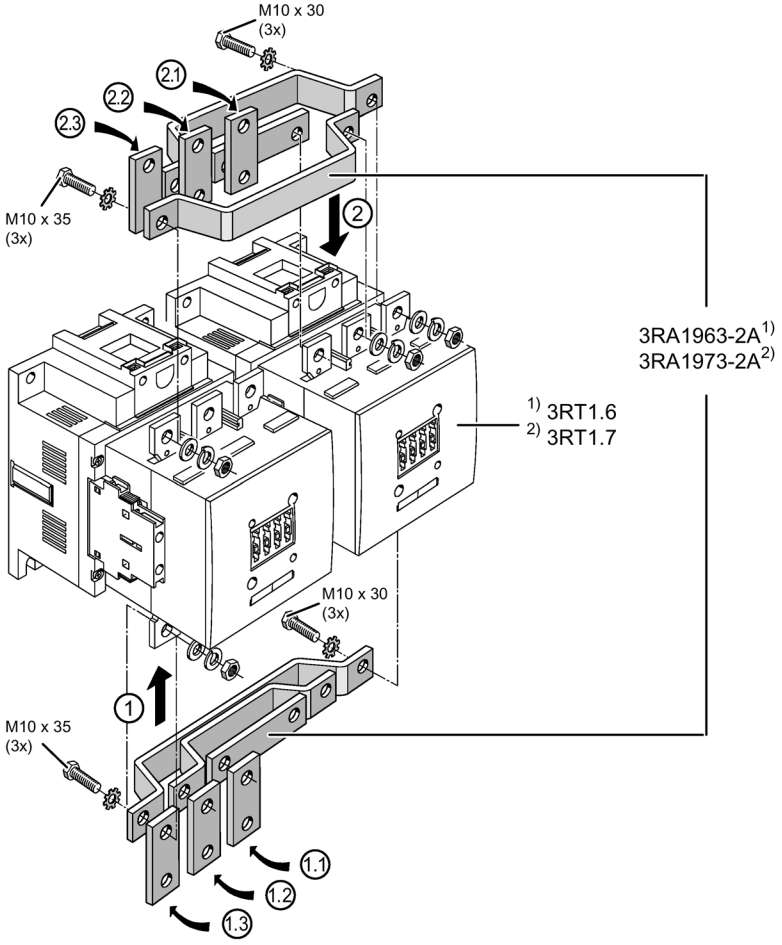

① Slide the wiring modules for connection without box terminal block onto the contactors from below.
Screw the wiring modules for connection without box terminal block onto the contactors using the screws provided for this purpose.

② Slide the wiring modules for connection without box terminal block onto the contactors from above.
Screw the wiring modules for connection without box terminal block onto the contactors using the screws provided for this purpose.

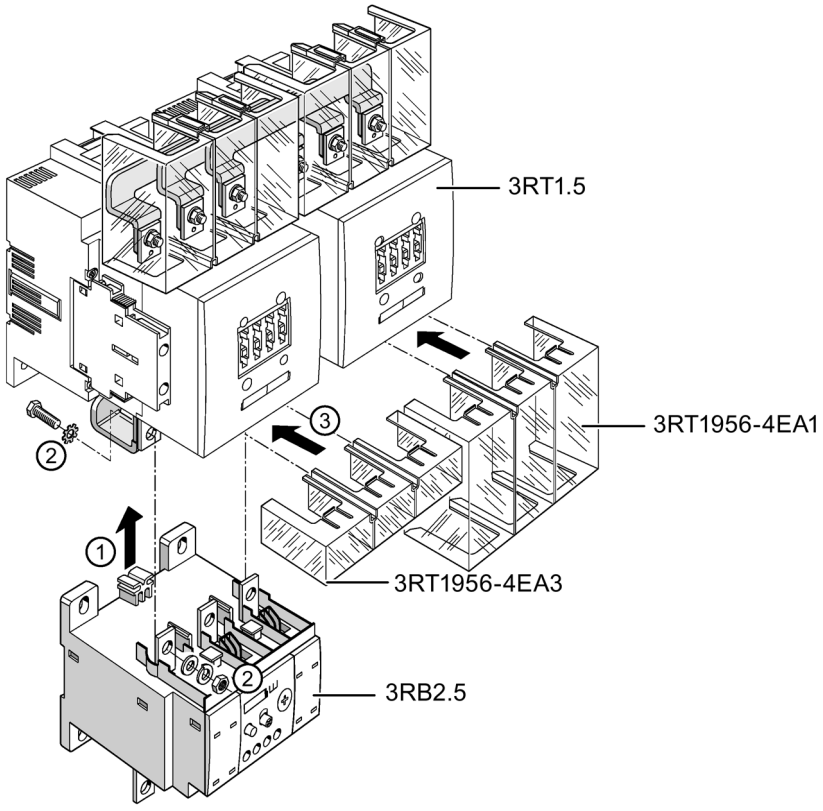

① Slide the electronic overload relay onto the contactor from below.

② Screw the electronic overload relay onto the contactor with the screws provided for this purpose.

③ As shown in the figure, slide the terminal covers for covering the busbars into the openings provided on the box terminal block of the electronic overload relay and on the contactor.

8.31 Terminal covers for box terminal block

8.31.1 Description

Terminal covers for box terminal block

Terminal covers for box terminal blocks are available as additional touch protection for the 3RT contactors (sizes S2 to S12).

Table 8- 46 Terminal covers for cable lug connection and busbar connection

Size	Article number
S2	3RT2936-4EA2
S3	3RT2946-4EA2
S6	3RT1956-4EA2
S10 / S12	3RT1966-4EA2

8.31.2 Mounting

Mounting the terminal cover for the box terminal block

The diagram uses the 3RT1.5 contactor size S6 as an example of mounting the terminal cover for the box terminal block.

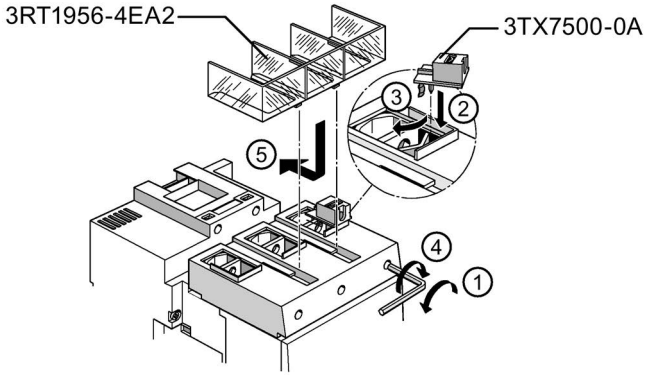

① Undo the screws on the main conductor terminals.
② Place the auxiliary conductor connection onto the box terminal block from above, as shown in
③ the figure.
④ Screw the main conductor terminals tight on the contactor.
⑤ Slide the terminal cover for the box terminal block into the openings provided on the box terminal block of the contactor.

8.32 Main current path surge attenuation module for vacuum contactors

8.32.1 Description

Main current path surge attenuation module for vacuum contactors

The main current path attenuation module is available for the following rated operational voltages:

- U_e <= 690 V: 3RT1966-1PV3
- U_e <= 1000 V: 3RT1966-1PV4

The main current path attenuation module is connected separately from the contactor over a cable length of approximately 35 cm on the outgoing terminal of the 2T1 / 4T2 / 6T3 contactor.

8.32.2 Mounting

Wiring diagram

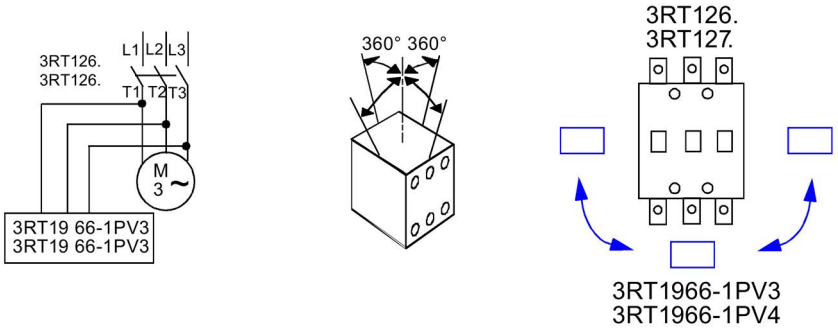

Cable connection main current path surge attenuation module

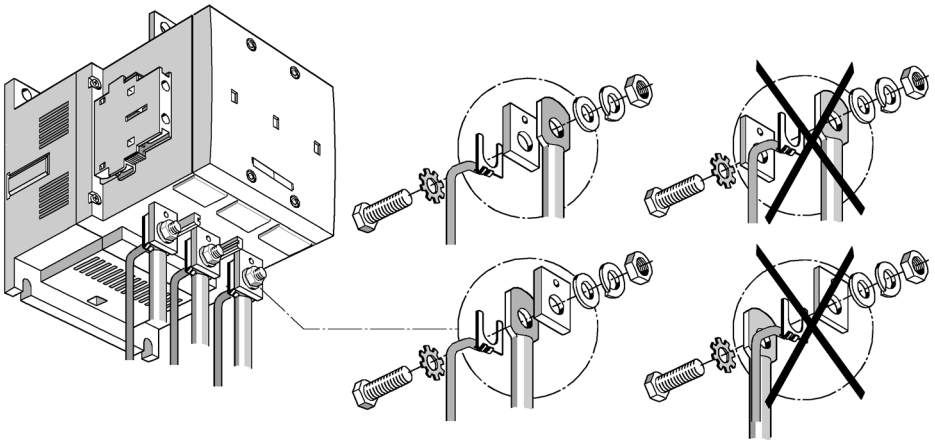

Dimensions

3RT1966-1PV3

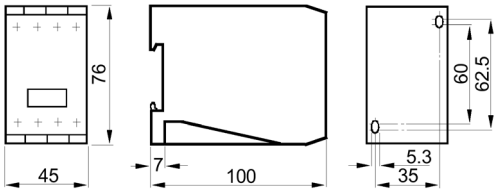

3RT1966-1PV4

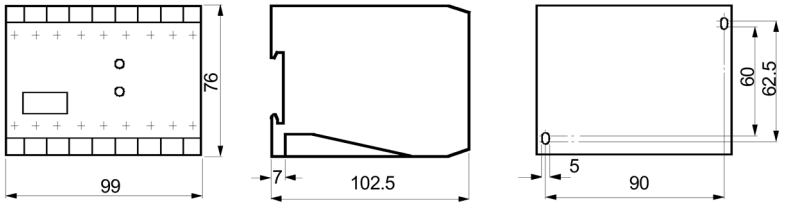

8.33 Box terminal block (size S6 to S12)

8.33.1 Description

Box terminal block

Box terminal blocks for round conductors and for ribbon cables are each available for the contactors (sizes S6 and S10 / S12).

On the box terminal blocks for size S6, the auxiliary conductor connections must be used additionally for voltage tapping for the 3TX7500-0A box terminal. The box terminal blocks for contactors of sizes S10 / 12 also have one auxiliary conductor connection per main conductor connection.

Table 8- 47 Box terminal block

Size		Article number
S6	Max. 70 mm² [1]	3RT1955-4G
	Max. 120 mm²	3RT1956-4G
	Auxiliary conductor connection for box terminals	3TX7500-0A
S10 / S12	Max. 240 mm²	3RT1966-4G
	Auxiliary conductor connection for box terminals integrated	

[1] As standard on 3RT1054-1 contactor (55 kW).

8.33.2 Mounting

Mounting the box terminal block

The following figures show how to mount and disassemble the box terminal block onto the 3RT1.6 / 3RT1.7 contactor in sizes S10 / S12.

Mounting the box terminal block onto the 3RT1.6 / 3RT1.7 contactor

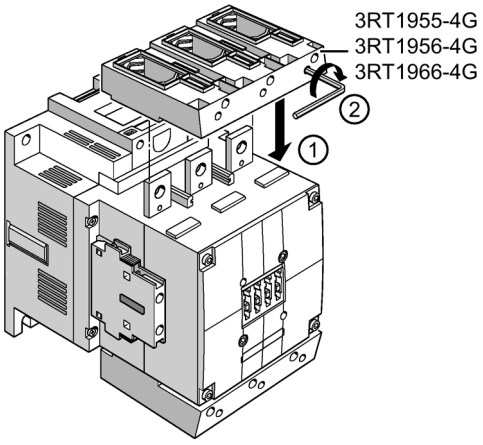

① Mount the box terminal block on the contactor.
② Screw the box terminal block tight on the contactor. Check whether the box terminal block is fitted firmly.

Disassembly of the box terminal block from the 3RT1.6 / 3RT1.7 contactor

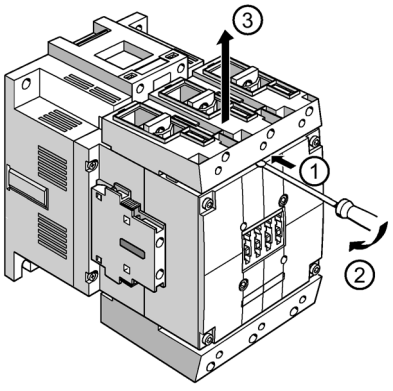

① Position the screwdriver in the middle of the contactor, as shown in the figure.
② Slightly lever open the box terminal block to dislodge it.
③ Detach the box terminal block from the contactor in the upward direction.

8.34 Solid-state time-delay auxiliary switch blocks (size S6 to S12)

8.34.1 Description

The solid-state time-delay auxiliary switch blocks sizes S6 to S12 have the following features:

- The solid-state time-delay auxiliary switch block is supplied with power via two terminals (A1 / A2).
- The time delay of the solid-state time-delay auxiliary switch block can be activated either by a parallel link to any contactor coil or by any power source.
- The OFF-delay version operates without an auxiliary voltage
- The minimum ON duration is 200 ms.
- A 1-pole auxiliary switch block can be snapped onto the front of the contactor in addition to the solid-state time-delay auxiliary switch block.
- The solid-state time-delay auxiliary switch block has no integrated overvoltage attenuation for the connected contactor.

Versions

The following versions of the solid-state time-delay auxiliary switch block are available:

- ON-delay
- OFF-delay without control signal
- Star-delta (wye-delta) function

Table 8- 48 Versions of the solid-state time-delay auxiliary switch block

Function	Output	Rated control supply voltage U_S 1)	Adjustable time range	Article number
ON-delay2)	1 NO contact + 1 NC contact	24 … 240 V AC/DC	0.05 ... 1	3RT1926-2EJ11
			0.5 … 10	3RT1926-2EJ21
			5 ... 100	3RT1926-2EJ31
		100 … 127 V AC	0.05 ... 1	3RT1926-2EC11
			0.5 … 10	3RT1926-2EC21
			5 ... 100	3RT1926-2EC31
		200 … 240 V AC	0.05 ... 1	3RT1926-2ED11
			0.5 … 10	3RT1926-2ED21
			5 ... 100	3RT1926-2ED31
OFF-delay without control signal2)3)	1 NO contact + 1 NC contact	24 … 240 V AC/DC	0.05 ... 1	3RT1926-2FJ11
			0.5 … 10	3RT1926-2FJ21
			5 ... 100	3RT1926-2FJ31
		100 … 127 V AC	0.05 ... 1	3RT1926-2FK11
			0.5 … 10	3RT1926-2FK21
			5 ... 100	3RT1926-2FK31
		200 … 240 V AC	0.05 ... 1	3RT1926-2FL11
			0.5 … 10	3RT1926-2FL21
			5 ... 100	3RT1926-2FL31
Star-delta (wye-delta) function (varistor integrated)2)	1 NO delayed + 1 NO instantaneous, dead time 50 ms	24 V AC/DC	1.5 … 30	3RT1926-2GJ51
		100 … 127 V AC		3RT1926-2GC51
		200 … 240 V AC		3RT1926-2GD51

1) AC voltages are valid for 50 and 60 Hz.

2) Terminals A1 and A2 for the control supply voltage of the solid-state time-delay auxiliary switch must be connected to the associated contactor by means of connecting cables.

3) Setting of output contacts not defined in the as-supplied state (bistable relay). Application of the control supply voltage once results in contact changeover to the correct setting.

ON-delay and OFF-delay functions

The solid-state time-delay auxiliary switch block in the "ON-delay" and "OFF-delay" versions has the following features:

- Allows time-delayed functions up to 100 s.
- 3 setting ranges
- Contains a relay with 1 NO contact + 1 NC contact; depending on the version, the relay is switched either after an ON-delay or after an OFF-delay.

Star-delta (wye-delta) function

The solid-state time-delay auxiliary switch with "star-delta (wye-delta)" function has the following features:

- It is equipped with one delayed and one instantaneous NO contact, with a dead time of 50 ms between the two.
- The delay time of the NO contact can be adjusted between 1.5 s and 30 s.
- The contactor on which the solid-state time-delay auxiliary switch block is mounted operates without a delay.

Connection

The terminals A1 and A2 for the rated control supply voltage of the solid-state time-delay auxiliary switch block are connected to the corresponding contactor by connecting cables.

Terminal designation

Another auxiliary switch block can be snapped onto the contactor beside the solid-state time-delay auxiliary switch block.
The terminals of the delayed contacts are designated -5 / -6 (NC contactors) and -7 / -8 (NO contacts).

8.34.2 Configuration

Function charts

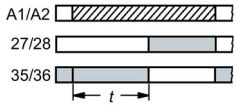

ON-delay
1 NO contact + 1 NC contact

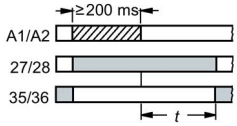

OFF-delay without auxiliary voltage
1 NO contact + 1 NC contact

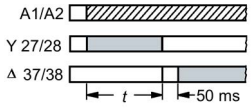

Star-delta (wye-delta) function
1 NO contact instantaneous
1 NC contact delayed

8.34.3 Mounting/Disassembly

The mounting / disassembly of a solid-state time-delay auxiliary switch block on a contactor is similar to the mounting / disassembly of a front-mounted auxiliary switch block.

Note

"OFF-delay without control signal" function

The setting of the output contacts is not defined in as-supplied state (bistable relay). Connect the control voltage and then disconnect it again to set the contacts to the normal position.

Technical data

9

9.1 Technical data in Siemens Industry Online Support

Technical data sheet

You can find all the technical data of the product in the Siemens Industry Online Support (https://support.industry.siemens.com/cs/ww/en/ps/16132/td).

1. Enter the full article number of the desired device in the "Product" field, and confirm with the Enter key.
2. Click the "Technical data link.

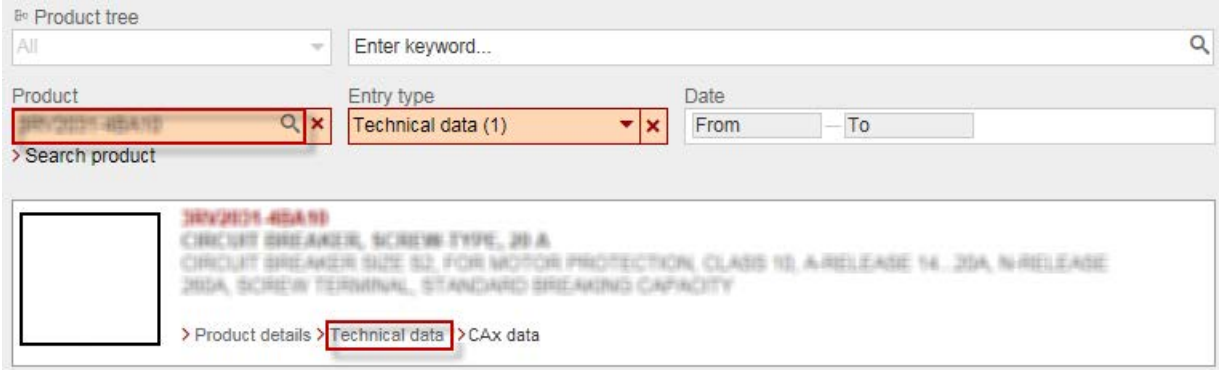

9.2 Overview tables

Overview tables technical data

You will find overview tables with technical data in the "Product information" tab in our online ordering system (https://mall.industry.siemens.com/mall/en/WW/Catalog/Products/8210239?tree=CatalogTree).

Circuit diagrams

10

10.1 CAx data

You can find the CAx data in the Siemens Industry Online Support (https://support.industry.siemens.com/cs/ww/en/ps/16132/td).

1. Enter the full article number of the desired device in the "Product" field, and confirm with the Enter key.
2. Click the "CAx data link.

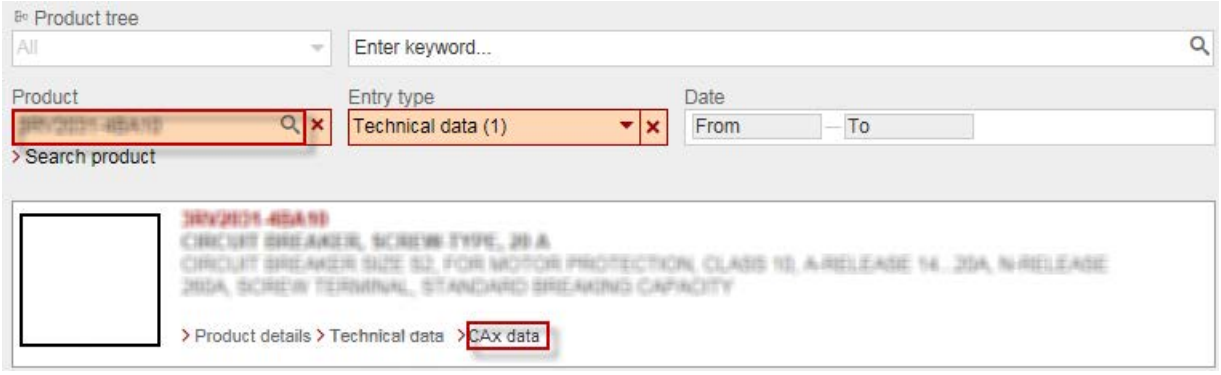

10.2 Contactors and contactor accessories

3RT2.1 motor contactors (size S00)

3RT201.-.A..1, 3RT201.-.B..1
3RT201.-.H..1, 3RT201.-.M..1

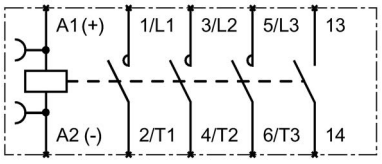

S00 contactor, without RC circuit, 1 NO contact

3RT201.-.A..2, 3RT201.-.B..2
3RT201.-.H..2, 3RT201.-.M..2

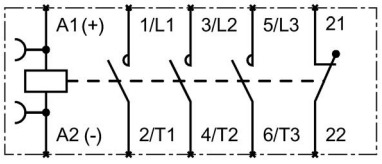

S00 contactor, without RC circuit, 1 NC contact

3RT201.-.F..1, 3RT201.-.J..1
3RT201.-.V..1

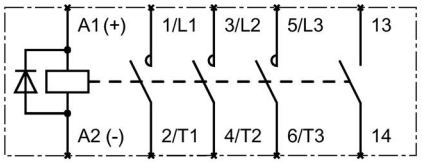

S00 contactor, with internal diode, 1 NO contact

3RT201.-.F..2, 3RT201.-.J..2
3RT201.-.V..2

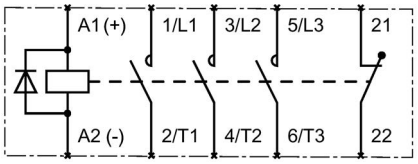

S00 contactor, with internal diode, 1 NC contact

3RT201.-.K..1

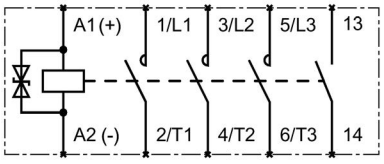

S00 contactor, with internal suppressor diode, 1 NO contact

3RT201.-.K..2

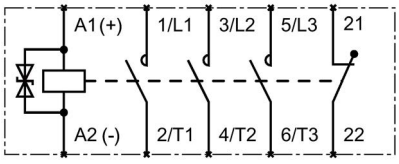

S00 contactor, with internal suppressor diode, 1 NC contact

3RT201.-.S..1

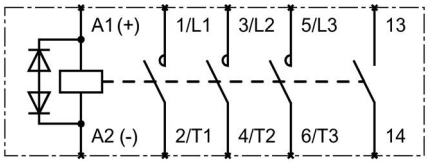

S00 contactor, with internal diode combination, 1 NO contact

3RT201.-.S..2

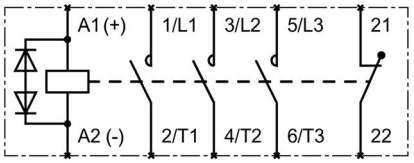

S00 contactor, with internal diode combination, 1 NC contact

3RT201.-.Q..1, 3RT201.-.W..1

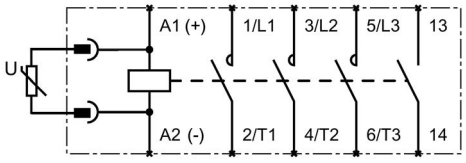

S00 contactor, with varistor connected on the front, 1 NO contact

3RT201.-.Q..2, 3RT201.-.W..2

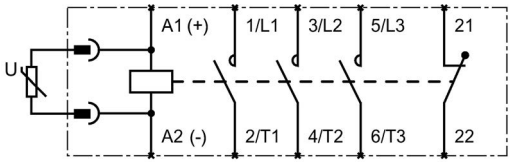

S00 contactor, with varistor connected on the front, 1 NC contact

Traction contactor 3RT201.-2K..2-0LA0 (size S00)

3RT201.-2K..2-0LA0

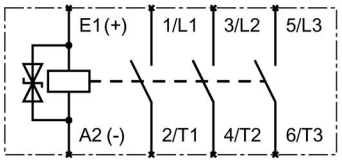

S00 traction contactor, with internal suppressor diode, 1 NC contact

3RT201.-2L.42-0LA0

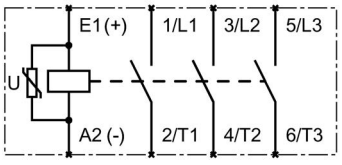

Contactor with 4 main current paths 3RT23 (size S00)

3RT231.-.A..0, 3RT231.-.B..0

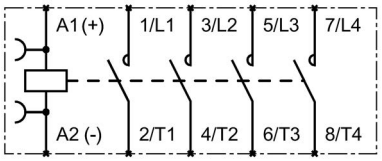

Contactor with 4 main current paths for switching resistive loads

Pole-changing contactor 3RT25 (size S00)

3RT251.-.A..0, 3RT251.-.B..0

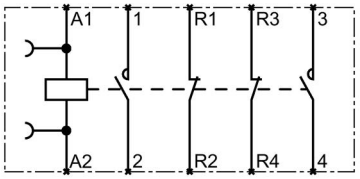

Pole-changing contactor S00, 4 main current paths, 2 NO contacts, 2 NC contacts

3RT2.2 (size S0), 3RT2.3 (size S2) and 3RT2.4 (size S3) motor contactors

3RT202.-.A..0, 3RT202.-.B..0, 3RT203.-.A..0, 3RT204.-.A..0

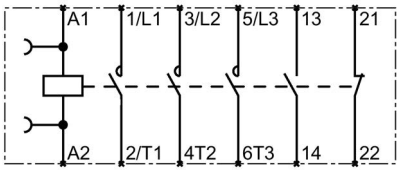

S0 / S2 / S3 contactor, without RC circuit, 1 NO contact, 1 NC contact

3RT202.-.A..4, 3RT202.-.B..4, 3RT203.-.A..4, 3RT204.-.A..4

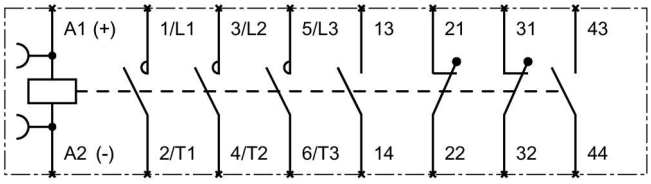

S0 / S2 / S3 contactor, without RC circuit, 2 NO contacts, 2 NC contacts

3RT202.-.F..0

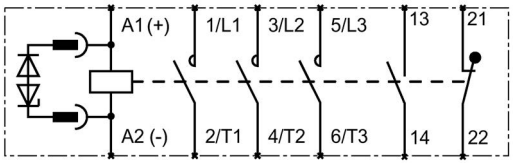

S0 contactor, with internal diode, 1 NO contact, 1 NC contact

3RT202.-.K..0, 3RT203.-.K..0, 3RT204.-.K..0

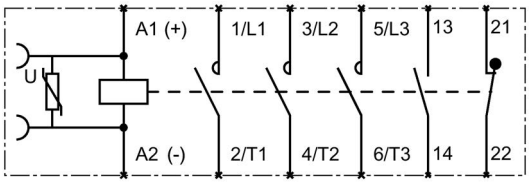

S0 / S2 / S3 contactor, with internal varistor, 1 NO contact, 1 NC contact

3RT202.-.N..0, 3RT202.-.X..0, 3RT203.-.N..0, 3RT203.-.X..0, 3RT204.-.N..0, 3RT204.-.X..0

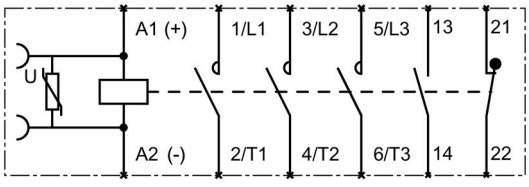

S0 / S2 / S3 contactor, with electronic operating mechanism, 1 NO contact, 1 NC contact

Contactor with 4 main current paths 3RT23 (sizes S0 and S2)

3RT232.-.A..0, 3RT232.-.B..0, 3RT233.-.A..0, 3RT233.-.N..0

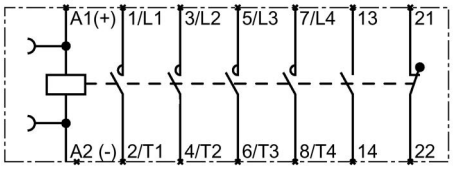

S0 and S2 contactor, 4 main current paths for switching resistive loads, 4 NO contacts plus 1 NO contact, 1 NC contact

Pole-changing contactor 3RT25 (sizes S0 and S2)

3RT252.-.A..0, 3RT252.-.B..0**, 3RT253.-.A..0**

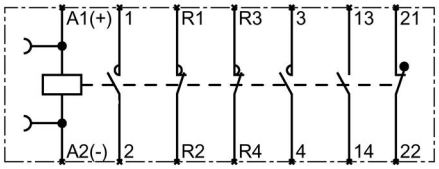

Pole-changing contactor, S0 and S2, 4 main current paths, 2 NO contacts, 2 NC contacts, plus 1 NO contact, 1 NC contact

3RH2 contactor relays

3RH2122-.A..0, 3RH2122-.B..0, 3RH2122-.H..0, 3RH2122-.M..0

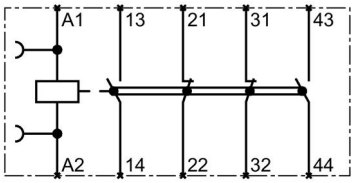

Contactor relay, without RC circuit, 2 NO contacts, 2 NC contacts

3RH2131-.A..0, 3RH2131-.B..0, 3RH2131-.H..0, 3RH2131-.M..0

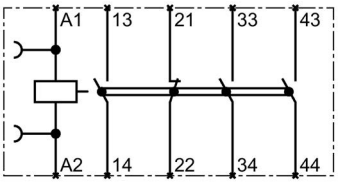

Contactor relay, without RC circuit, 3 NO contacts, 1 NC contact

3RH2140-.A..0, 3RH2140-.B..0, 3RH2140-.H..0, 3RH2140-.M..0

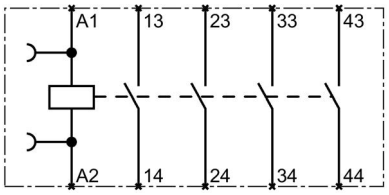

Contactor relay, without RC circuit, 4 NO contacts

3RH2244-.A..0, 3RH2244-.B..0, 3RH2344-.A..0, 3RH2344-.B..0

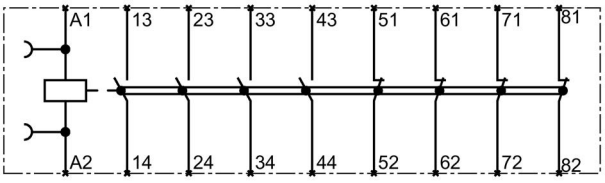

Contactor relay, without RC circuit, 4 NO contacts, 4 NC contacts

3RH2262-.A..0, 3RH2262-.B..0, 3RH2362-.A..0, 3RH2362-.B..0

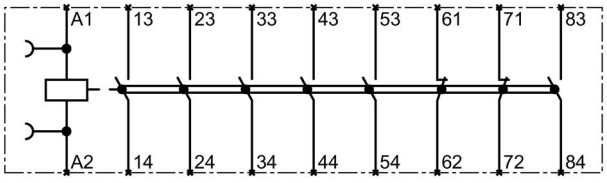

Contactor relay, without RC circuit, 6 NO contacts, 2 NC contacts

3RH2122-.F..0, 3RH2122-.J..0, 3RH2122-.V..0

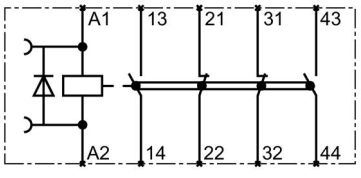

Contactor relay, with integrated diode, 2 NO contacts, 2 NC contacts

3RH2131-.F..0, 3RH2131-.J..0, 3RH2131-.V..0

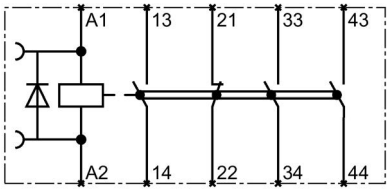

Contactor relay, with integrated diode, 3 NO contacts, 1 NC contact

3RH2140-.F..0, 3RH2140-.J..0, 3RH2140-.V..0

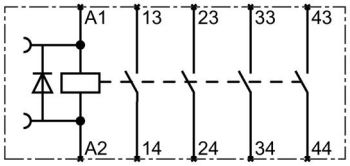

Contactor relay, with integrated diode, 4 NO contacts

3RH2122-.W..0, 3RH2122-.Q..0

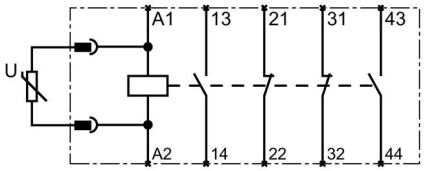

Contactor relay, with connected varistor, 2 NO contacts, 2 NC contacts

3RH2131-.W..0

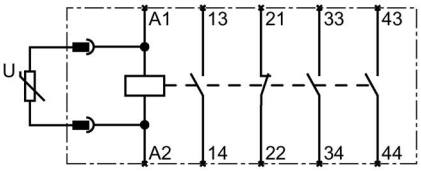

Contactor relay, with connected varistor, 3 NO contacts, 1 NC contact

3RH2140-.W..0

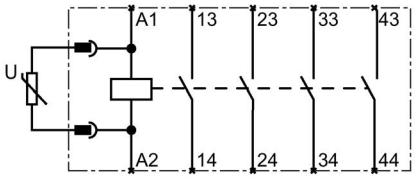

Contactor relay, with connected varistor, 4 NO contacts

3RH2122-.K..0, 3RH2122-.S..0

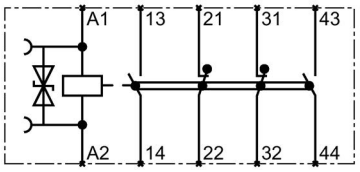

Contactor relay, with integrated suppressor diode, 2 NO contacts, 2 NC contacts

3RH2131-.K..0, 3RH2131-.S..0

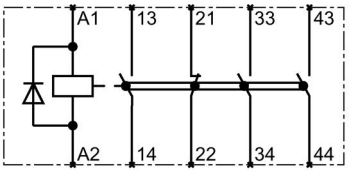

Contactor relay, with integrated suppressor diode, 3 NO contacts, 1 NC contact

3RH2140-.K..0, 3RH2140-.S..0

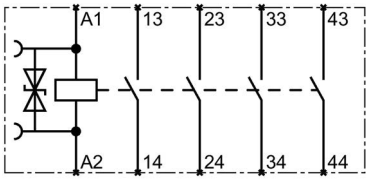

Contactor relay, with integrated suppressor diode, 4 NO contacts

3RH2122-.G..0

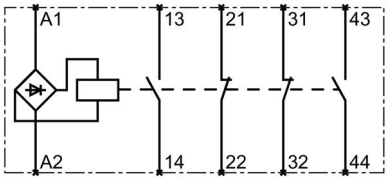

Contactor relay, with integrated full-wave rectifier, 2 NO contacts, 2 NC contacts

3RH2131-.G..0

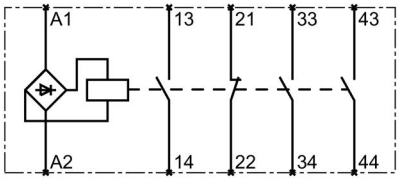

Contactor relay, with integrated full-wave rectifier, 3 NO contacts, 1 NC contact

3RH2140-.G..0

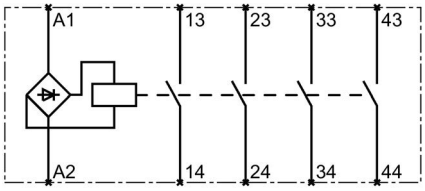

Contactor relay, with integrated full-wave rectifier, 4 NO contacts

Traction contactor 3RH2122-.K...-0LA00

3RH2122-.K...-0LA00

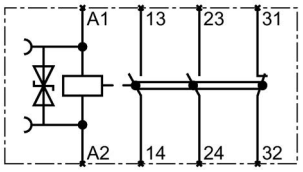

Traction contactor, with integrated suppressor diode, 2 NO contacts, 2 NC contacts

3RH24 latched contactor relays

3RH2422-.A..0, 3RH2422-.B..0

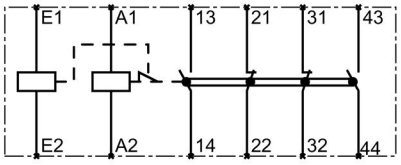

Latched contactor relay, without RC circuit, 2 NO contacts, 2 NC contacts

3RH2431-.A..0, 3RH2431-.B..0

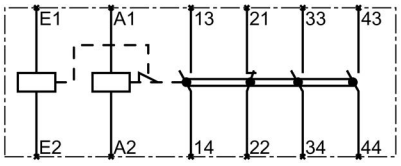

Latched contactor relay, without RC circuit, 3 NO contacts, 1 NC contact

3RH2440-.A..0, 3RH2440-.B..0

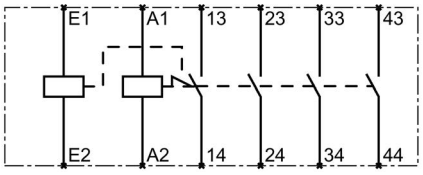

Latched contactor relay, without RC circuit,4 NO contacts

Lateral auxiliary switches

3RH2911-.DA02



Auxiliary switch block, lateral, 2 NC contacts

3RH2921-.DA02

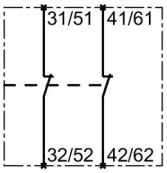

Auxiliary switch block, lateral, 2 NC contacts

3RH2911-.DA11

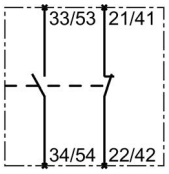

Auxiliary switch block, lateral, 1 NO contact, 1 NC contact

3RH2911-.DE11

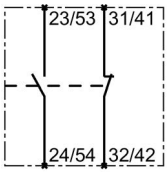

Auxiliary switch block, lateral, 1 NO contact, 1 NC contact

3RH2921-.DA11

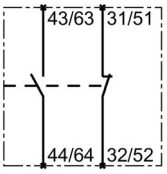

Auxiliary switch block, lateral, 1 NO contact, 1 NC contact

3RH2921-.DE11

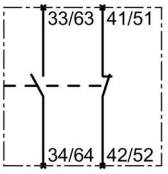

Auxiliary switch block, lateral, 1 NO contact, 1 NC contact

3RH2911-.DA20



Auxiliary switch block, lateral, 2 NO contacts

3RH2921-.DA20

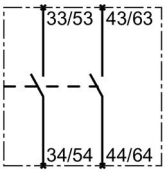

Auxiliary switch block, lateral, 2 NO contacts

Auxiliary switch for mounting on the front, 1-pole

3RH2911-.AA01, 3RH2911-.BA01

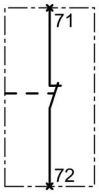

Auxiliary switch block, for mounting on the front, 1-pole, 1 NC contact

3RH2911-.AA10, 3RH2911-.BA10

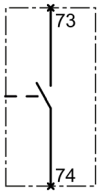

Auxiliary switch block, for mounting on the front, 1-pole, 1 NO contact

Auxiliary switch for mounting on the front, 2-pole

3RH2911-.LA20, 3RH2911-.MA20

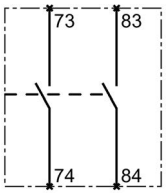

Auxiliary switch block, for mounting on the front, 2-pole, 2 NO contacts

3RH2911-.NF20

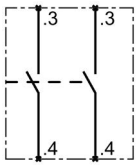

Auxiliary switch block, for mounting on the front, 2-pole, 2 NO contacts

3RH2911-.NF02

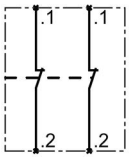

Auxiliary switch block, for mounting on the front, 2-pole, 2 NC contacts

3RH2911-.LA11, 3RH2911-.MA11

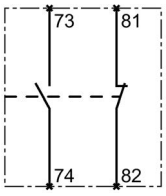

Auxiliary switch block, for mounting on the front, 2-pole, 1 NO contact, 1 NC contact

3RH2911-.NF11

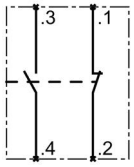

Auxiliary switch block, for mounting on the front, 2-pole, 1 NO contact, 1 NC contact

Auxiliary switches for mounting on the front, 4-pole

3RH2911-.HA01

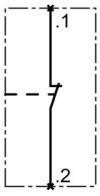

Auxiliary switch block, for mounting on the front, 4-pole, 1 NC contact

3RH2911-.HA10

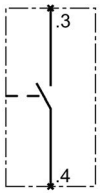

Auxiliary switch block, for mounting on the front, 4-pole, 1 NO contact

3RH2911-.HA02

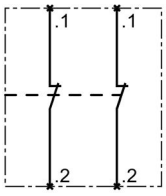

Auxiliary switch block, for mounting on the front, 4-pole, 2 NC contacts

3RH2911-.HA20

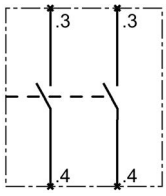

Auxiliary switch block, for mounting on the front, 4-pole, 2 NO contacts

3RH2911-.HA03

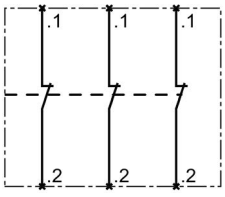

Auxiliary switch block, for mounting on the front, 4-pole, 3 NC contacts

3RH2911-.HA30

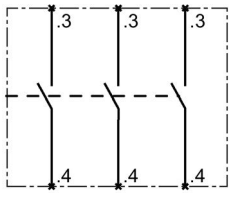

Auxiliary switch block, for mounting on the front, 4-pole, 3 NO contacts

3RH2911-.GA04

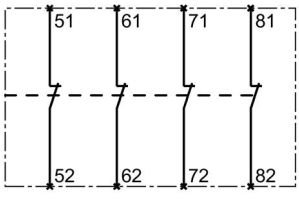

Auxiliary switch block, for mounting on the front, 4-pole, 4 NC contacts

3RH2911-.GA40

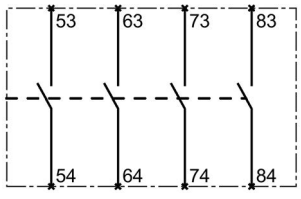

Auxiliary switch block, for mounting on the front, 4-pole, 4 NO contacts

3RH2911-.FA04

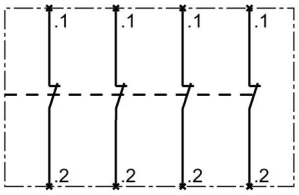

Auxiliary switch block, for mounting on the front, 4-pole, 4 NC contacts

3RH2911-.FA40

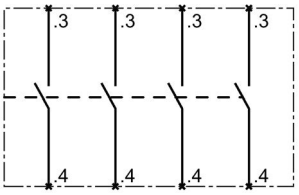

Auxiliary switch block, for mounting on the front, 4-pole, 4 NO contacts

3RH2911-.GA13

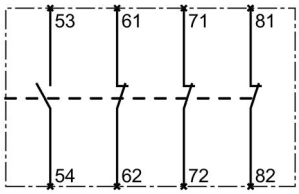

Auxiliary switch block, for mounting on the front, 4-pole, 1 NO contact, 3 NC contacts

3RH2911-.HA13

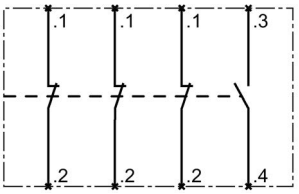

Auxiliary switch block, for mounting on the front, 4-pole, 1 NO contact, 3 NC contacts

3RH2911-.GA31

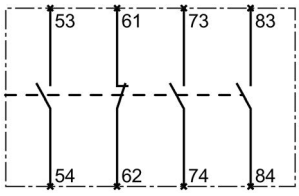

Auxiliary switch block, for mounting on the front, 4-pole, 3 NO contacts, 1 NC contact

3RH2911-.HA31

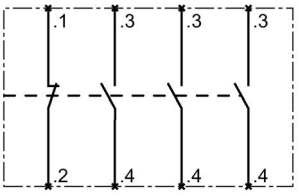

Auxiliary switch block, for mounting on the front, 4-pole, 3 NO contacts, 1 NC contact

3RH2911-.GA22

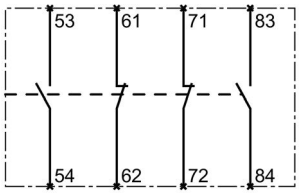

Auxiliary switch block, for mounting on the front, 4-pole, 2 NO contacts, 2 NC contacts

3RH2911-.HA22

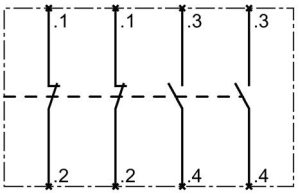

Auxiliary switch block, for mounting on the front, 4-pole, 2 NO contacts, 2 NC contacts

3RH2911-.FB11

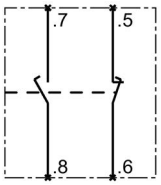

Auxiliary switch block, 1 x make-before-break, 1 NO contact, 1 NC contact

3RH2911-.FC22

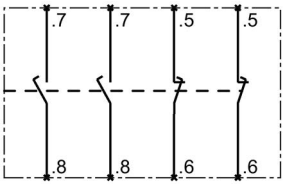

Auxiliary switch block, for mounting on the front, 4-pole, 2 x make-before-break, 2 NO contacts, 2 NC contacts

3RH2911-.HA12

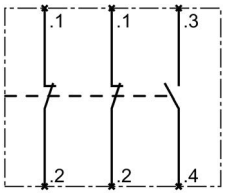

Auxiliary switch block, for mounting on the front, 4-pole, 1 NO contact, 2 NC contacts

3RH2911-.HA21

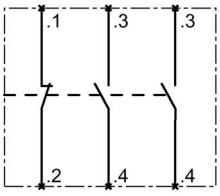

Auxiliary switch block, for mounting on the front, 4-pole, 2 NO contacts, 1 NC contact

3RH2911-.FB22

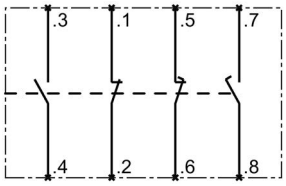

Auxiliary switch block, for mounting on the front, 4-pole, 1 x make-before-break, 2 NO contacts, 2 NC contacts

3RH2911-2FA22

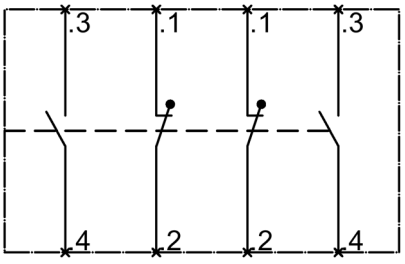

Auxiliary switch block, for mounting on the front, 4-pole, 2 NO contacts, 2 NC contacts

3RH2911-.HA11

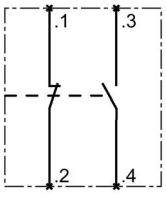

Auxiliary switch block, for mounting on the front, 4-pole, 1 NO contacts, 1 NC contact

Surge suppressor

3RT29.6-1C...

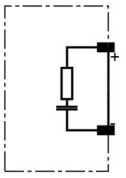

Surge suppressor, RC element

3RT29.6-.B...

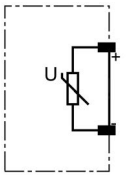

Surge suppressor, varistor

3RT29.6-1D...

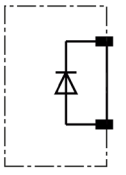

Surge suppressor, suppression diode

3RT2926-1E...

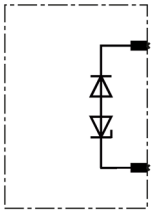

Surge suppressor, diode combination

3RT29.6-1J...

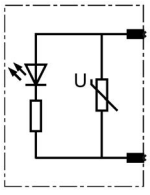

Surge suppressor, varistor with LED

3RT29.6-1L...

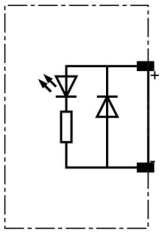

Surge suppressor, suppression diode with LED

3RT2926-1M...

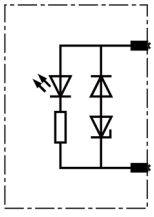

Surge suppressor, diode combination with LED

Mechanical latch

3RT2926-3A.31

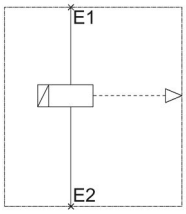

Mechanical latch

LED display indicator module

3RT2926-1Q...

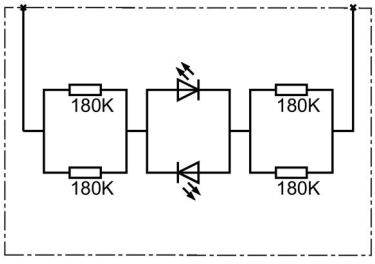

LED display indicator module for indicating the contactor function

10.3 Capacitor contactors (S00 / S0 / S2)

Capacitor contactors (size S00)

3RT261-.A..3

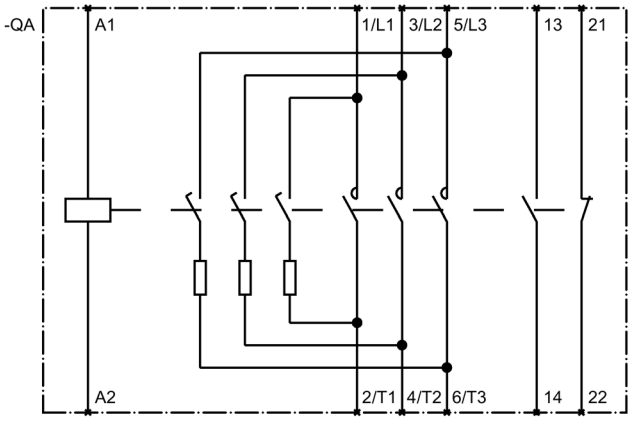

3RT261-.B..3

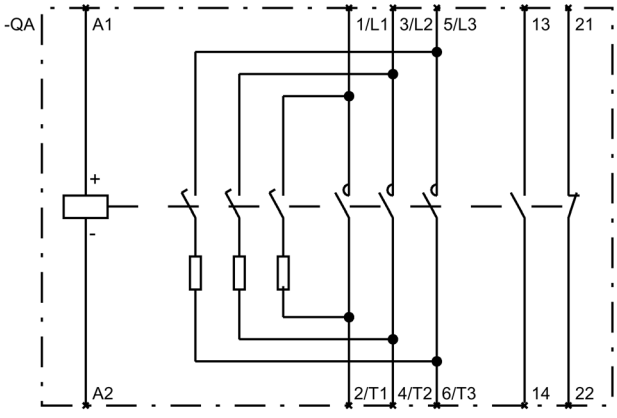

3RT261-.A..5

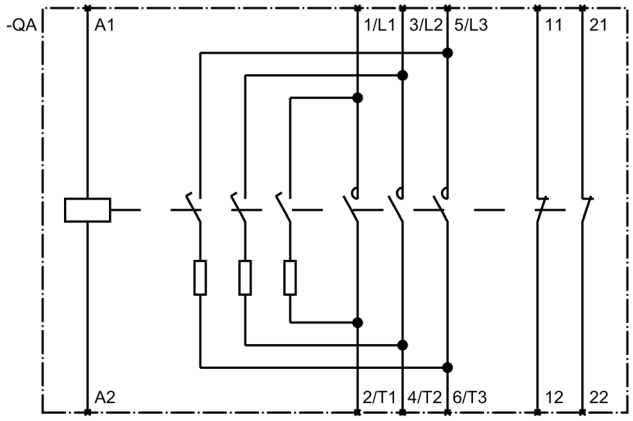

3RT261-.B..5

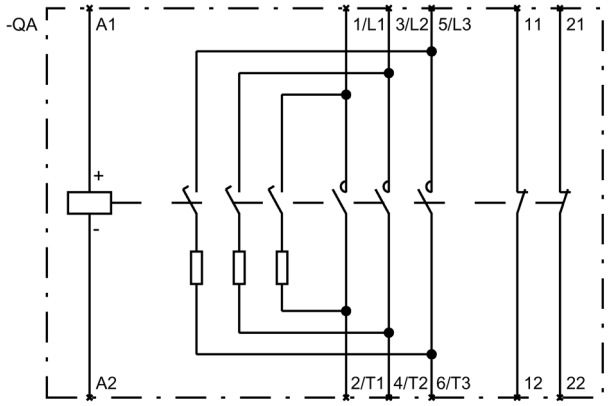

Capacitor contactors (size S0)

3RT262-.A..5

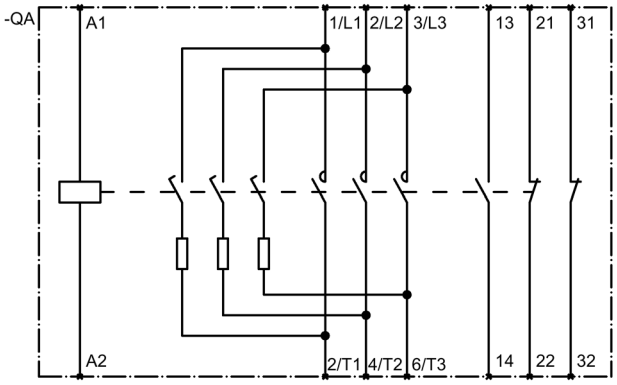

3RT262-..B..5

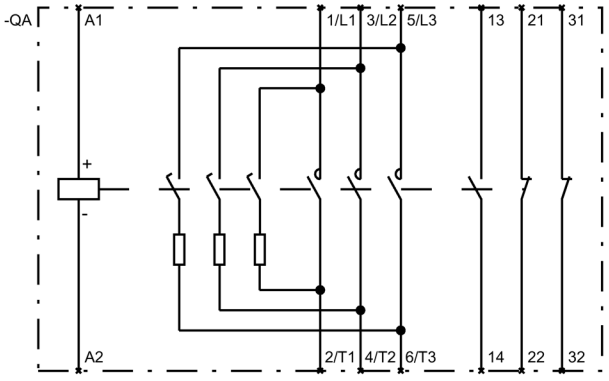

3RT262-.N..5

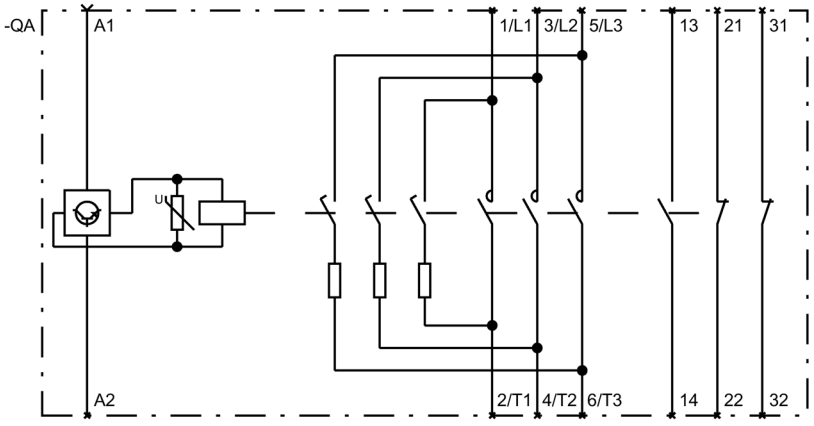

Capacitor contactors (size S2)

3RT263-.A..3

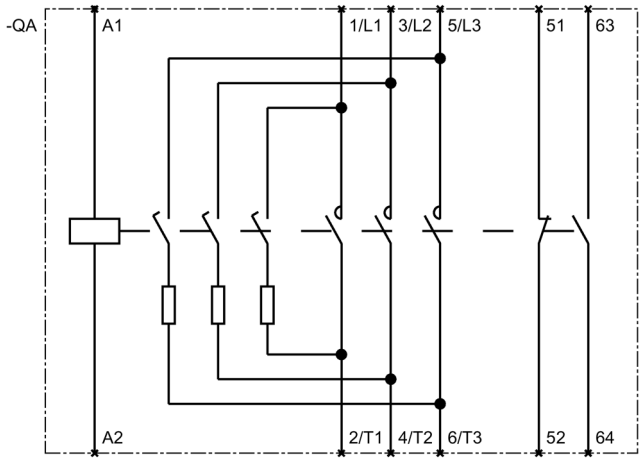

3RT263-.A..5

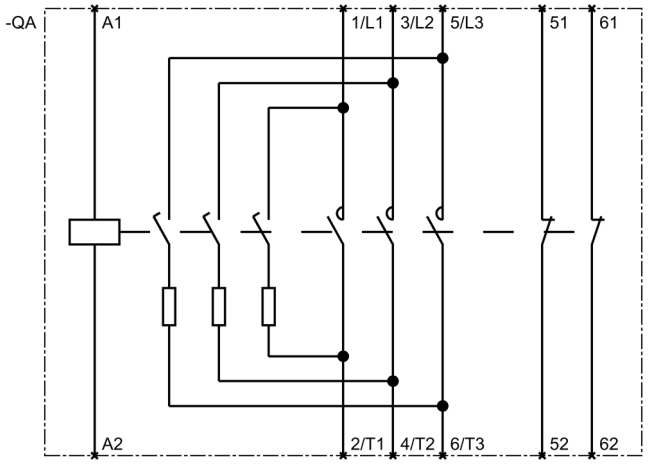

3RT263-.N..5

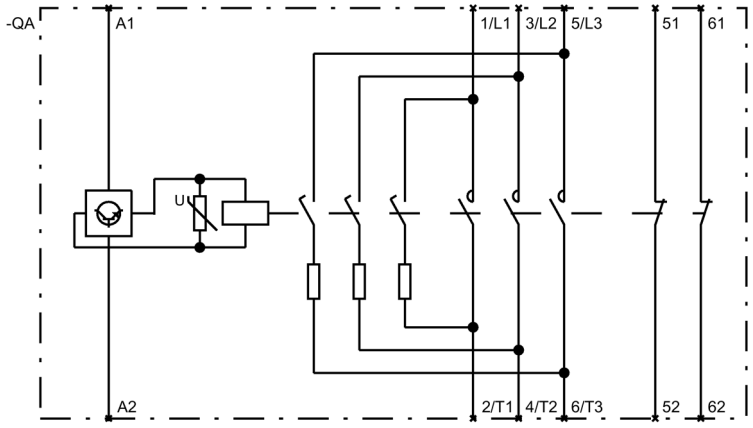

10.4 Reversing contactor assemblies (S00 / S0 / S2 / S3)

Reversing contactor assembly, size S00

3RA231.-....

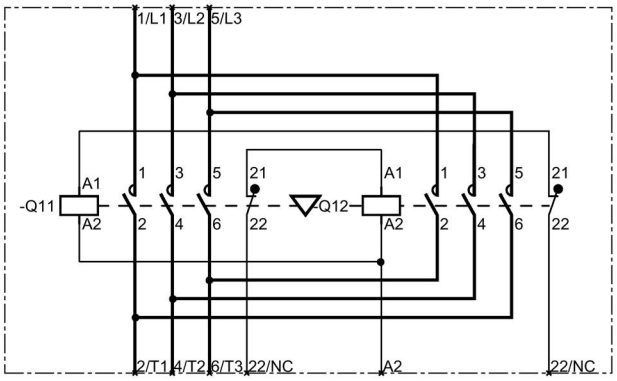

Figure 10-1 Reversing contactor assembly S00

Reversing contactor assemblies, sizes S0, S2 and S3

3RA232.-.... / 3RA233.-.... / 3RA234.-....

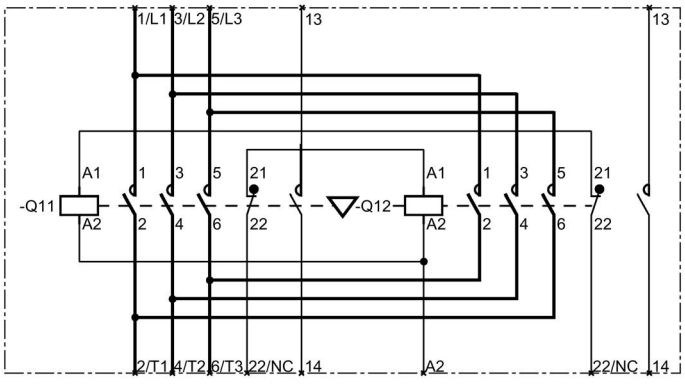

Figure 10-2 Reversing contactor assemblies S0, S2 and S3

10.5 Reversing contactor assemblies (S6 / S10 / S12)

Main circuit

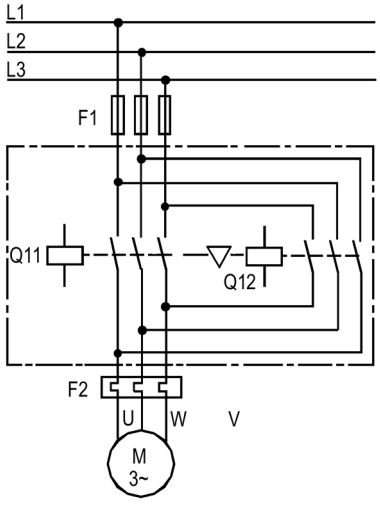

Control circuit

Pushbutton switch control

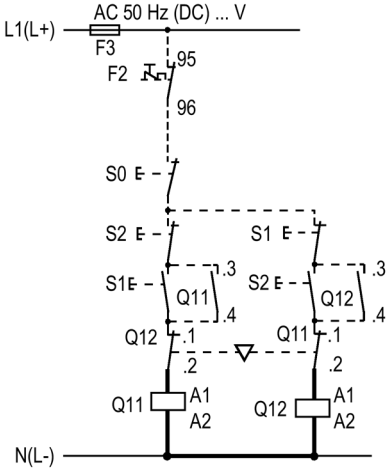

Maintained-contact operation

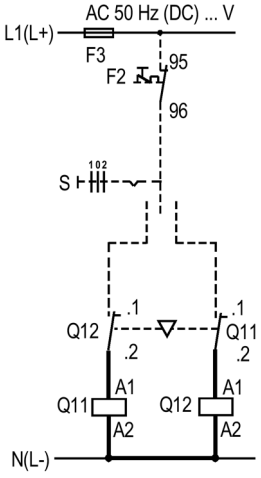

10.6 Contactor assemblies for star-delta (wye-delta) start (S00 / S0 / S2 / S3)

Contactor assemblies for star-delta (wye-delta) start with 3RA28 function modules for star-delta (wye-delta) start

3RA241.-..F..

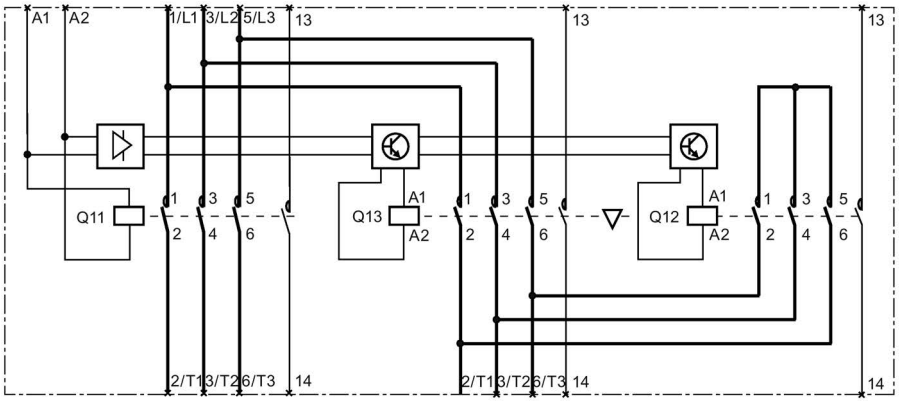

Figure 10-3 S00 contactor assemblies for star-delta (wye-delta) start, with 3RA28 function modules for star-delta (wye-delta) start

3RA242.-..F.. / 3RA243.-..F.. / 3RA244.-..F..

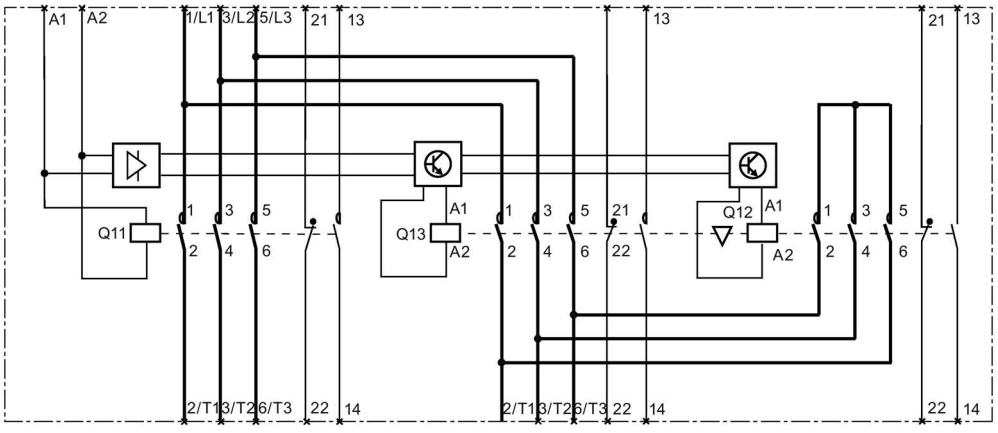

Figure 10-4 S0, S2 and S3 contactor assemblies for star-delta (wye-delta) start, with 3RA28 function modules for star-delta (wye-delta) start

Contactor assemblies for star-delta (wye-delta) start with mounted function modules for AS-Interface

3RA241.-..H..

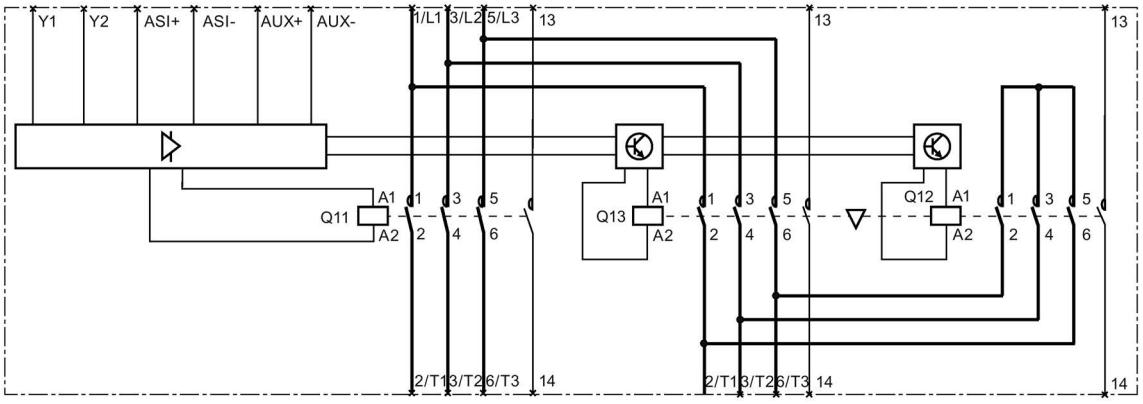

Figure 10-5 S00 contactor assemblies for star-delta (wye-delta) start, with mounted function modules for AS-Interface

3RA242.-..H.. / 3RA243.-..H.. / 3RA244.-..H..

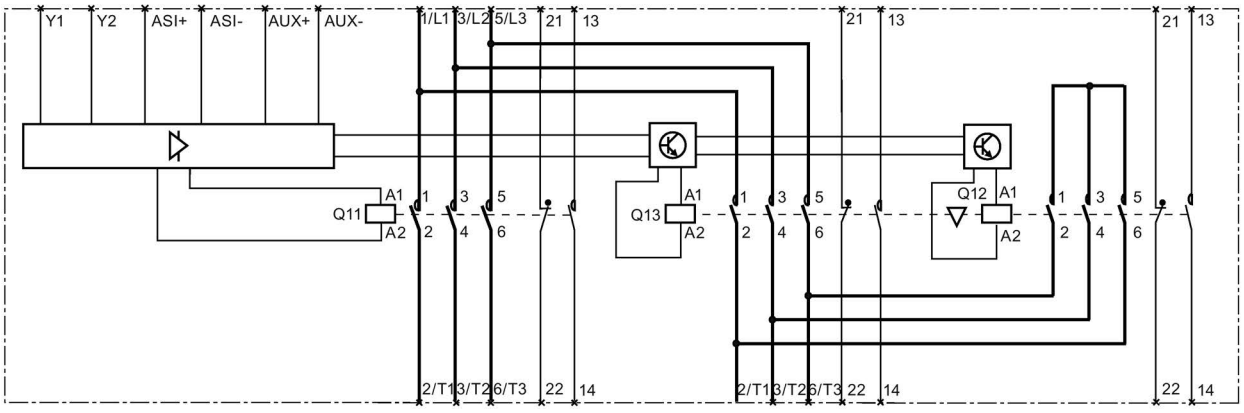

Figure 10-6 S0, S2 and S3 contactor assemblies for star-delta (wye-delta) start, with mounted function modules for AS-Interface

Contactor assemblies for star-delta (wye-delta) start with mounted function modules for IO-Link

3RA241.-..E..

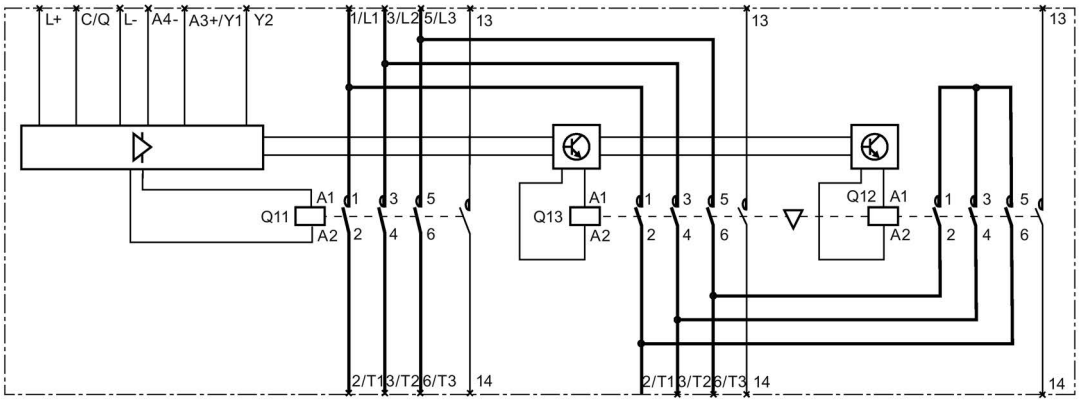

Figure 10-7 S00 contactor assembly for star-delta (wye-delta) start, with mounted function modules for IO-Link

3RA242.-..E.. / 3RA243.-..E.. / 3RA244.-..E..

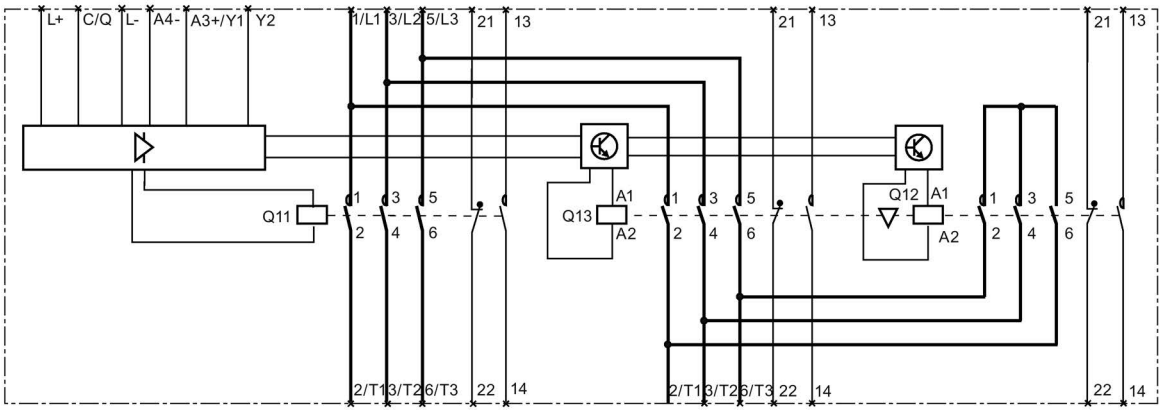

Figure 10-8 S0, S2 and S3 contactor assembly for star-delta (wye-delta) start, with mounted function modules for IO-Link

10.7 Contactor assemblies for star-delta (wye-delta) start (S6 / S10 / S12)

Main circuit

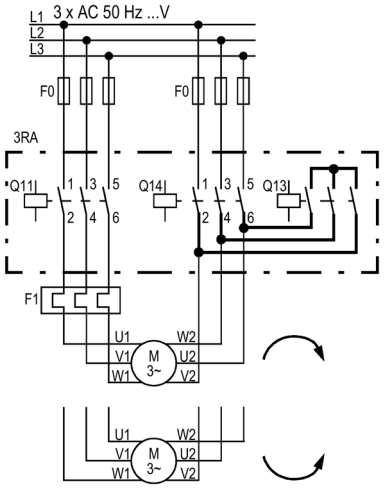

Control circuit

Pushbutton switch control

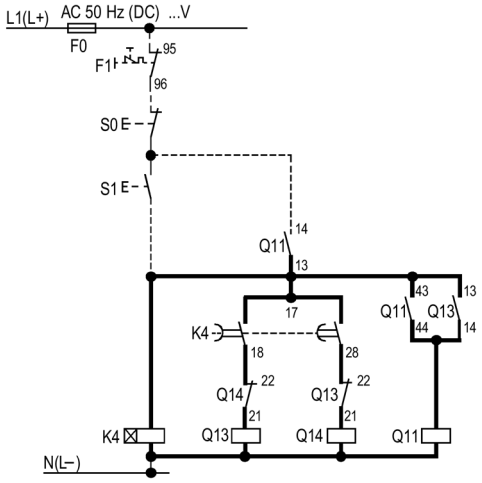

S0 "OFF" button
S1 "ON" button
S Maintained-contact switch
K1 Line contactor
K2 Star contactor
K3 Delta contactor
K4 Solid-state time-delay auxiliary switch block or timing relay
F0 Fuses
F1 Overload relay

Maintained-contact operation

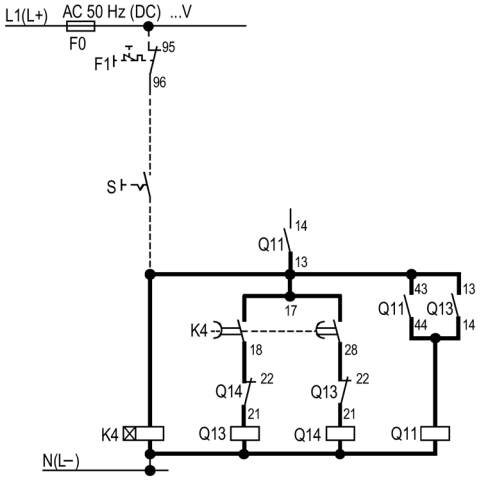

S0 "OFF" button
S1 "ON" button
S Maintained-contact switch
K1 Line contactor
K2 Star contactor
K3 Delta contactor
K4 Solid-state time-delay auxiliary switch block or timing relay
F0 Fuses
F1 Overload relay

Types of coordination

A

Types of coordination

Standard DIN EN 60947-4-1 (VDE 0660 Part 102) or IEC 60947-4-1 distinguishes between two types of coordination (type of coordination), which are referred to as coordination type "1" and coordination type "2". In the case of both types of coordination, the short-circuit is reliably mastered. the only differences are in the extent of the damage sustained by the device following a short circuit.

Type of coordination 1

The load feeder may be non-operational after a short circuit has been cleared. Damage to the contactor and the overload release is also permissible.

Type of coordination 2

After short-circuit disconnection, there must be no damage to the overload release or to any other part. The load feeder can resume operation without needing to be renewed. Welding of the contactor contacts only is permitted if these can be separated easily without significant deformation.

References

B

B.1 References

Further references

You will find more information about the 3RT contactors / contactor assemblies on the Internet (http://support.automation.siemens.com/WW/view/en/20358011/133300).

In addition to this manual, please refer to the operating instructions and manuals for any accessories. You can download the relevant documentation from the Internet (http://www.siemens.com/sirius/manuals). Simply enter the Article number of the relevant item into the search field.

Operating instructions

Title	Article number
SIRIUS contactor S00 (3RT2.1, 3RH21 and 3RH24)	3ZX1012-0RH21-1AA1
SIRIUS contactor S0 (3RT2.2)	3ZX1012-0RT22-1AA1
SIRIUS contactor S2 (3RT2.3)	3ZX1012-0RT20-3AA1
SIRIUS contactor S3 (3RT2.4)	3ZX1012-0RT20-4AA1
SIRIUS contactor S6 / S10 / S12 (3RT105/3RT145.-.A/N, 3RT106/146.-.A/N and 3RT107/147.-.A/N)	3ZX1012-0RT05-1AA1
SIRIUS contactor with remaining lifetime module S6 / S10 / S12 (3RT1.5, 3RT1.6 and 3RT1.7)	3ZX1012-0RT05-1RA1
SIRIUS vacuum contactor S10 / S12 (3RT126.-.A/N / 3RT127.-.A/N)	3ZX1012-0RT64-1VA1
SIRIUS capacitor contactor S00 / S0 (3RT261.-1.... / 3RT262.-1....)	3ZX1012-0RT26-3BA1
SIRIUS capacitor contactor S2 (3RT263.-1....)	3ZX1012-0RT26-3AA1
SIRIUS reversing contactor assemblies S00 (3RA231.-8X.3.-1 and 3RA231.-8X.3.-2)	3ZX1012-0RA23-8AA1
SIRIUS reversing contactor assemblies S0 (3RA232.-8X.3.-1 and 3RA232.-8X.3.-2)	3ZX1012-0RA23-8BA1
SIRIUS reversing contactor assembly S2 (3RA233.-8X.30-1)	3ZX1012-0RA23-8CA1
SIRIUS reversing contactor assembly S3 (3RA234.-8X.30-1)	3ZX1012-0RA23-8DA1
SIRIUS assembly kit for reversing contactor assemblies S00 (3RA2913-2AA1 and 3RA2913-2AA2)	3ZX10120RA20-4AA1
SIRIUS assembly kit for reversing contactor assemblies S0 (3RA2923-2AA1 and 3RA2923-2AA2)	3ZX1012-0RA20-3AA1
SIRIUS assembly kit for reversing contactor assemblies S2 (3RA2933-2AA1 and 3RA2933-2AA2)	3ZX1012-0RA20-2AA1
SIRIUS assembly kit for reversing contactor assembly S3 (3RA2943-2AA1 and 3RA2943-2AA2)	3ZX1012-0RA20-2CA1
SIRIUS wiring kit for reversing contactor assembly S6 / S10 / S12 (3RA1953-2A, 3RA1953-2M, 3RA1963-2A and 3RA1973-2A	3ZX1012-0RA54-1AA1

Title	Article number
SIRIUS contactor assembly for star-delta (wye-delta) start S00 (3RA241.-8X.3.-1 and 3RA241.-8X.3.-2)	3ZX1012-0RA24-8AA1
SIRIUS contactor assembly for star-delta (wye-delta) start S0 (3RA242.-8X.3.-1 and 3RA242.-8X.3.-2)	3ZX1012-0RA24-8BA1
SIRIUS contactor assembly for star-delta (wye-delta) start S2 (3RA243.-8X.32-1)	3ZX1012-0RA24-8CA1
SIRIUS contactor assembly for star-delta (wye-delta) start S3 (3RA244.-8X.32-1)	3ZX1012-0RA24-8DA1
SIRIUS assembly kit for contactor assembly for star-delta (wye-delta) start S00 (3RA2913-2BB1 and 3RA2913-2BB2)	3ZX1012-0RA20-4BA1
SIRIUS assembly kit for contactor assembly for star-delta (wye-delta) start S0 (3RA2923-2BB1, 3RA2923-2BB2 and 3RA2924-2BB1)	3ZX1012-0RA20-3BA1
SIRIUS assembly kit for contactor assembly for star-delta (wye-delta) start S2 (3RA2933-2BB1, 3RA2933-2BB2 and 3RA2933-2C)	3ZX1012-0RA20-2BA1
SIRIUS assembly kit for contactor assembly for star-delta (wye-delta) start S3 (3RA2943-2BB1, 3RA2943-2BB2 and 3RA2943-2C)	3ZX1012-0RA20-4CA1
SIRIUS wiring kit for contactor assembly for star-delta (wye-delta) start S6 / S10 / S12 (3RA1953-2B / 3RA1953-2N, 3RA1953-3G / 3RA1953-3F, 3RA1963-2B / 3RA1973-2B and 3RA1963-3E / 3RA1973-3E)	3ZX1012-0RA54-1CA1

B.2 Manuals - SIRIUS Modular System

Manuals - SIRIUS Modular System

You can download the SIRIUS manuals from the Internet (http://www.siemens.com/sirius/manuals).

Simply enter the Article number of the relevant item into the search field.

Information about ...	Is available in ...
• SIRIUS - system overview	• "SIRIUS - System Overview" (http://support.automation.siemens.com/WW/view/en/60311318) manual (Article number: 3ZX1012-0RA01-5AC1)
• Contactors and contactor assemblies 3RT, 3RH and 3RA	• "SIRIUS - SIRIUS 3RT contactors and contactor assemblies" (http://support.automation.siemens.com/WW/view/en/60306557) manual (Article number: 3ZX1012-0RT20-5AC1)
• 3RF34 electronic switching devices	• "SIRIUS - SIRIUS 3RF34 electronic Switching Devices" (http://support.automation.siemens.com/WW/view/en/60298187) manual (Article number: 3ZX1012-0RF34-5AC1)
• 3RW soft starters	• "SIRIUS 3RW30/3RW40 Soft Starters" (http://support.automation.siemens.com/WW/view/en/38752095) manual (Article number: 3ZX1012-0RW30-1AC1) • "SIRIUS 3RW44 Soft Starter" (http://support.automation.siemens.com/WW/view/en/21772518) manual (Article number: 3ZX1012-0RW44-1AC1)
• 3RV motor starter protectors	• "SIRIUS - SIRIUS 3RV" motor starter protectors (http://support.automation.siemens.com/WW/view/en/60279172) manual (Article number: 3ZX1012-0RV20-5AC1)
• 3RU, 3RB overload relays	• "SIRIUS 3RU thermal overload relays / SIRIUS 3RB electronic overload relays" (http://support.automation.siemens.com/WW/view/en/60298164) (Article number: 3ZX1012-0RU20-5AC1)
• 3RB24 electronic overload relay	• "3RB24 electronic Overload Relay for IO-Link" (http://support.automation.siemens.com/WW/view/en/46165627) manual (Article number: 3ZX1012-0RB24-0AC0)
• 3UG4 monitoring relays / 3RR2 current monitoring relays	• "3UG4/3RR2 Monitoring Relays" manual (http://support.automation.siemens.com/WW/view/en/70210263) (Article number: 3ZX1012-0UG40-0AC0)

Information about ...	Is available in ...
• 3RS1/3RS2 temperature monitoring relays	• "3RS1/3RS2 temperature monitoring relays" manual (http://support.automation.siemens.com/WW/view/en/54999309) (Article number: 3ZX1012-0RS10-1AC1)
• 3UG48 monitoring relays / 3RR24 current monitoring relays for IO-Link	• "3UG48/3RR24 Monitoring Relays for IO-Link" (http://support.automation.siemens.com/WW/view/en/68834040) manual (Article number: 3ZX1012-0UG48-0AC1)
• 3RS14/3RS15 temperature monitoring relays for IO-Link	• "3RS14/3RS15 temperature monitoring relays for IO-Link" (http://support.automation.siemens.com/WW/view/en/54375463) manual (Article number: 3ZX1012-0RS14-0AC0)
• 3RA load feeders	• "SIRIUS - SIRIUS 3RA load feeders" manual (http://support.automation.siemens.com/WW/view/en/60284351) (Article number: 3ZX1012-0RA21-5AC1)
• 3RA6 compact starters	• "SIRIUS 3RA6 Compact Starter" (http://support.automation.siemens.com/WW/view/en/27865747) manual (Article number: 3RA6992-0A)
• 3RA28 function modules for mounting on contactors	• "SIRIUS Innovations - SIRIUS 3RA28 Function Modules for mounting on 3RT2 Contactors" manual (http://support.automation.siemens.com/WW/view/en/60279150) (Article number: 3ZX1012-0RA28-5AC1)
• 3RA27 function modules for connection to the higher-level control	• "SIRIUS - SIRIUS 3RA2712 function modules for AS-Interface" manual (http://support.automation.siemens.com/WW/view/en/39318922) (Article number: 3ZX1012-0RA27-0AC0) • "SIRIUS - SIRIUS 3RA2711 function modules for IO-Link" manual (http://support.automation.siemens.com/WW/view/en/39319600) (Article number: 3ZX1012-0RA27-1AC1)
• 4SI SIRIUS electronic module (3RK1005-0LB00-0AA0)"	• "4SI SIRIUS Electronic Module" (http://support.automation.siemens.com/WW/view/en/37856470) manual (Article number: 3ZX1012-0LB00-0AA0)

B.3 More information

More information

More information is available from Siemens on the Internet via the following links.

- **Product documentation**
  You will find a list of manuals/operating instructions, characteristic curves, and certificates on the Internet (www.siemens.com/industrial-controls/support).
- **Product information**
  Catalogs and other informative documents can be obtained from the Information Center and Download Center (www.siemens.com/industrial-controls/infomaterial).
- **Online ordering system**
  You will find the online ordering system with all the latest data on the ordering and information platform (www.siemens.com/industrial-controls/mall).
- **Technical Assistance**
  Siemens supports you with all technical product and system enquiries – both before and after delivery. You can access our Service & Support Portal on the Internet (www.siemens.com/industrial-controls/technical-assistance). You can also submit your question directly to a technical consultant using our support request service.

Dimension drawings (dimensions in mm)

C

C.1 CAx data

You can find the CAx data in the Siemens Industry Online Support (https://support.industry.siemens.com/cs/ww/en/ps/16132/td).

1. Enter the full article number of the desired device in the "Product" field, and confirm with the Enter key.
2. Click the "CAx data link.

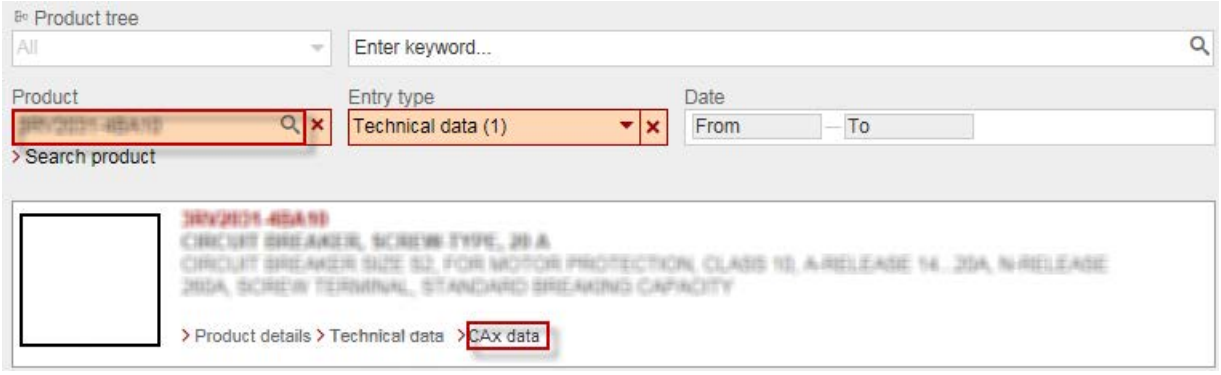

Note

All dimensions are specified in mm.

C.2 3RT2.1 contactors and 3RH2 contactor relays (size S00)

3RT2.1.-1 contactors (3-pole) and 3RH21..-1 contactor relays (4-pole) in screw-type connection system with accessories mounted

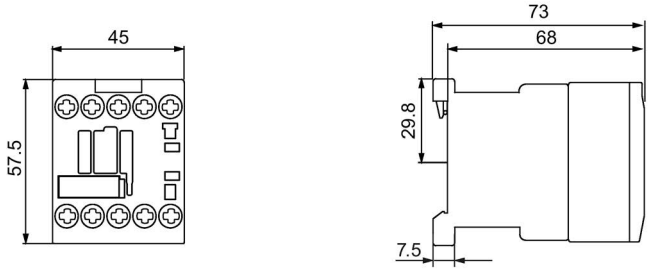

Figure C-1 3RT2.1.-1 contactor and 3RH21..-1 contactor relays (screw-type connection system)

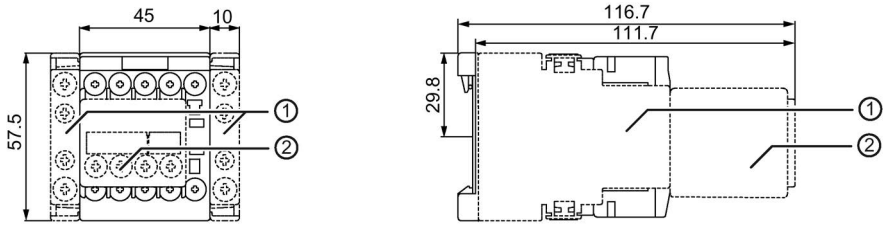

1	Laterally mountable auxiliary switch block	3RH2911-1DA.. / -1DE.. / -1EE..
2	Auxiliary switch block for mounting on the front	3RH2911-1FA.. / -1GA.. / -1HA.. / -1NF..

Figure C-2 3RT2.1.-1 contactor and 3RH21..-1 contactor relays (screw-type connection system) with auxiliary switch blocks mounted

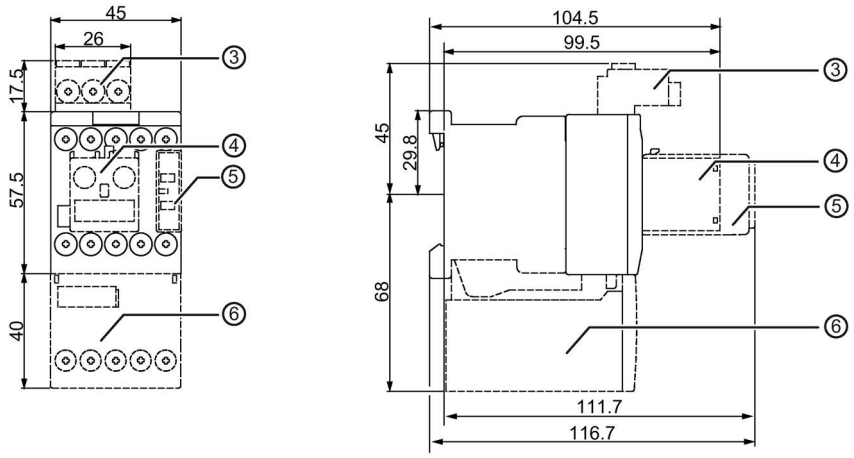

3	3-phase infeed terminal	3RA2913-3K
4	Surge suppressor	3RT2916-1...
5	Auxiliary switch block for mounting on the front	3RH2911-1AA.. / -1BA..
6	EMC suppression module	3RT2916-1P..

Figure C-3 3RT2.1.-1 contactors and 3RH21..-1 contactor relays (screw-type connection system) with accessories mounted

3RT2.1.-2 contactors and 3RH21..-2 contactor relays (4-pole) in spring-loaded connection system with accessories mounted

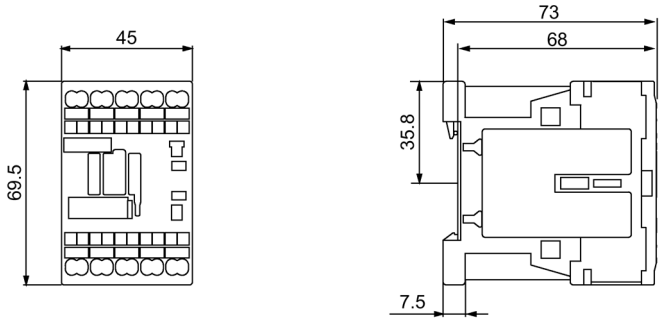

Figure C-4 3RT2.1.-2 contactor and 3RH21..-2 contactor relays (spring-loaded connection system)

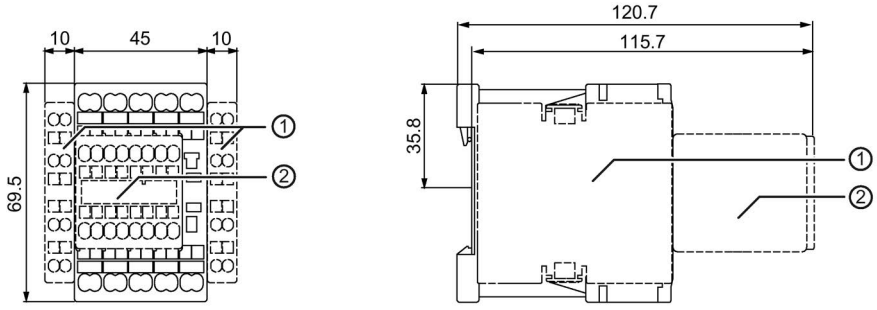

1 Laterally mountable auxiliary switch block 3RH2911-2DA.. / -2DE.. / -2EE..

2 Auxiliary switch block for mounting on the front 3RH2911-2FA.. / -2GA.. / -2HA.. / -2NF..

Figure C-5 3RT2.1.-2 contactor and 3RH21..-2 contactor relay (spring-loaded connection system) with auxiliary switch blocks mounted

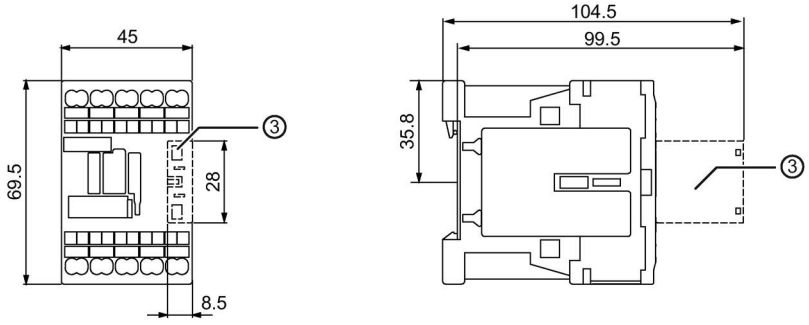

3 Surge suppressor 3RT2916-1...

Figure C-6 3RT2.1.-2 contactor and 3RH21..-2 contactor relay (spring-loaded connection system) with surge suppressor mounted

3RT2.1-4. contactors and 3RH21..-4 contactor relays (4-pole) with ring cable lug connection system and accessories mounted

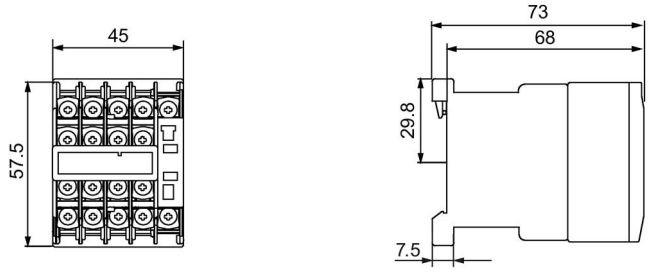

Figure C-7 3RT2.1.-4 contactor and 3RH21..-4 contactor relay (ring cable lug connection system)

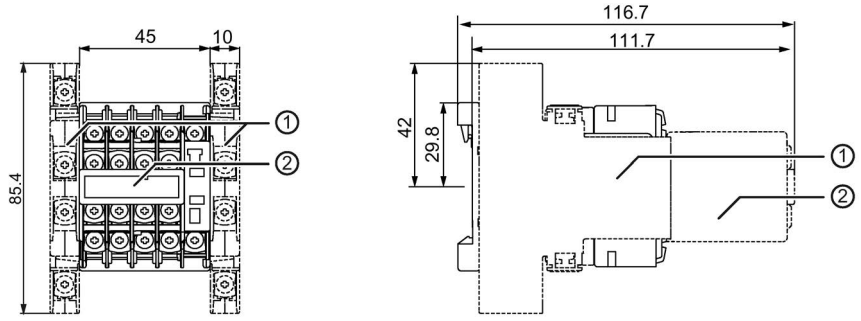

1 Laterally mountable auxiliary switch block 3RH2911-4DA..

2 Auxiliary switch block for mounting on the front 3RH2911-4FA.. / -4GA.. / -4HA.. / -4NF..

Figure C-8 3RT2.1-4. contactor and 3RH21..-4 contactor relay (ring cable lug connection system) with auxiliary switch blocks mounted

Latched 4-pole contactor relay 3RH24..-1 in screw-type connection system

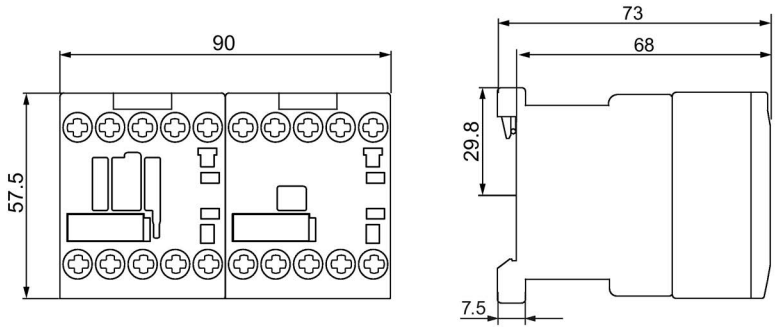

Figure C-9 Latched 4-pole contactor relay 3RH24..-1 (screw-type connection system)

3RH24..(0LA0) contactor relay with extended operating range in screw-type connection system

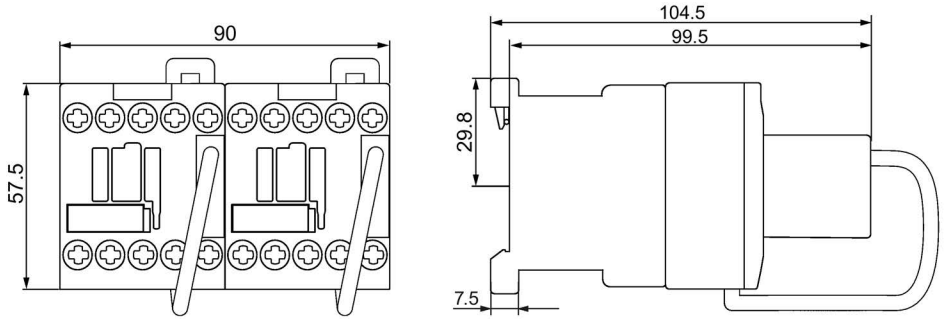

Figure C-10 3RH24.. contactor relay with extended operating range (screw-type connection system)

3RH201./3RH21..(0LA0) contactor relays with extended operating range in spring-loaded connection system

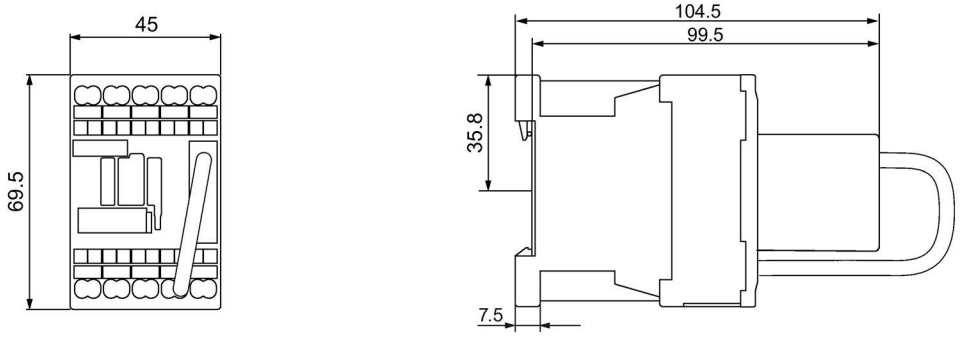

Figure C-11 3RH201. and 3RH21.. contactor relays with extended operating range (spring-loaded connection system)

Drilling plans for 3RT2.1.-1/3RT2.1-4./3RT2.1.-2 contactors and 3RH21.. 1/3RH21..-4/3RH21..-2 contactor relays

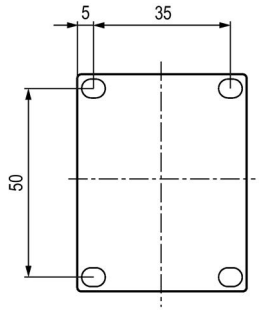

Figure C-12 Drilling plan for contactors and contactor relays with screw-type connections and ring cable lug connections (size S00)

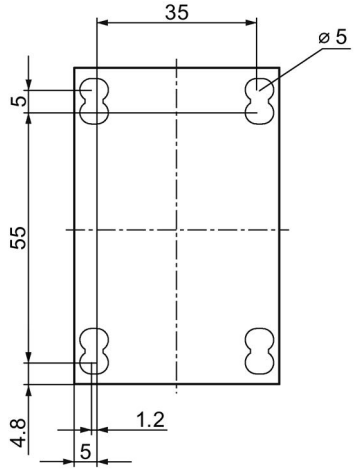

Figure C-13 Drilling plan for contactors and contactor relays with spring-loaded connections (size S00)

C.3 3RT2.2 contactors (size S0)

3RT2.2.-1 contactors (3-pole) in screw-type connection system with accessories mounted

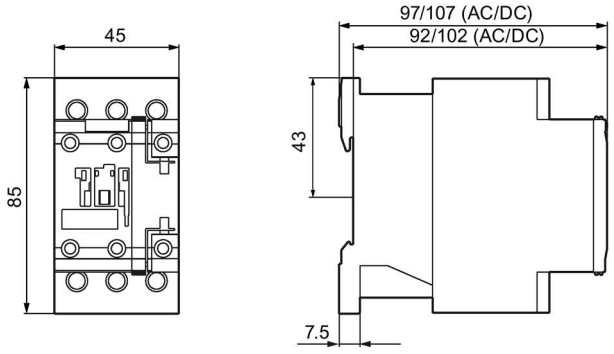

Figure C-14 3RT2.2.-1 contactors (screw-type connection system)

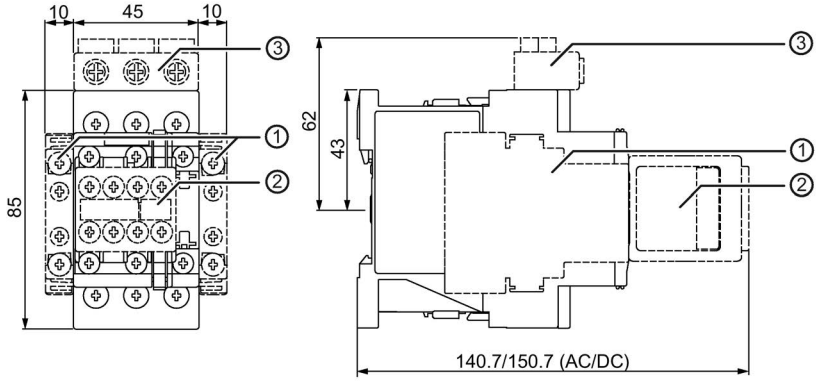

1	Laterally mountable auxiliary switch block	3RH2921-1DA.. / -1DE..
2	Auxiliary switch block for mounting on the front	3RH2911-1FA.. / -1GA.. / -1HA.. / -1NF..
3	3-phase infeed terminal	3RV2925-5AB

Figure C-15 3RT2.2.-1 contactors (screw-type connection system) with auxiliary switch blocks mounted and other accessories

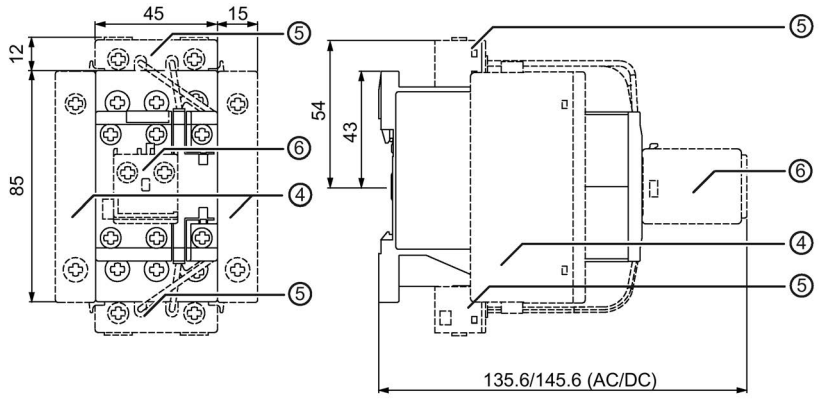

4	4-pole contactor for switching resistive loads	3RT232.
	4-pole pole-changing contactor for changing the polarity of hoisting gear motors (2 NO contacts and 2 NC contacts)	3RT252.
5	Coil terminal module	3RT2926-4RA11/-4RB11
6	Auxiliary switch block for mounting on the front	3RH2911-1AA.. / -1BA

Figure C-16 3RT2.2.-1 contactors (screw-type connection system) with accessories mounted

3RT2.2.-2/3RT202.-.....-0LA2 contactors (3-pole) in spring-loaded connection system with accessories mounted

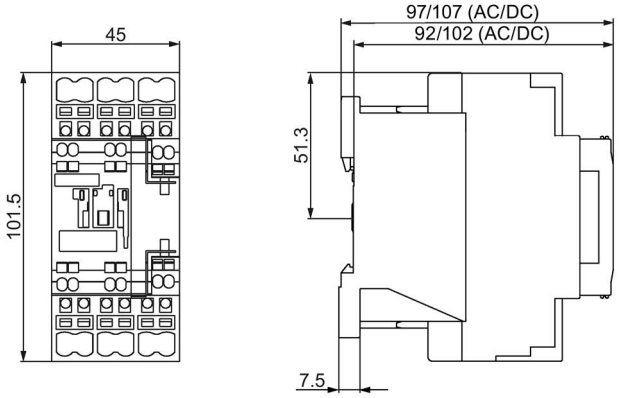

Figure C-17 3RT2.2.-2 and 3RT202.- ..... -0LA2 contactors (spring-loaded connection system)

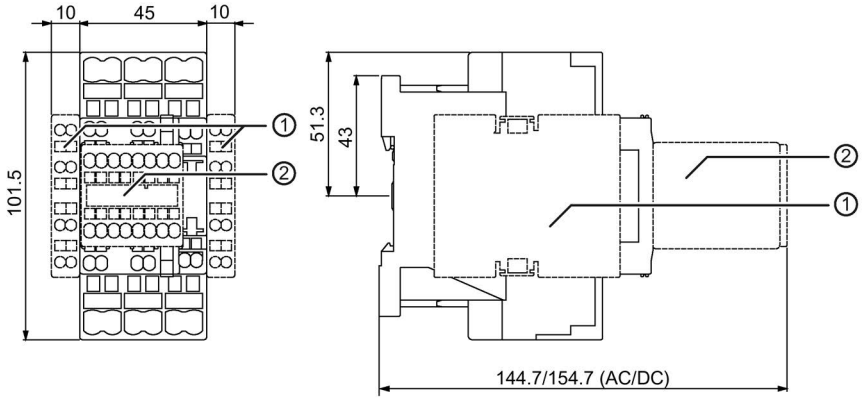

1 Laterally mountable auxiliary switch block 3RH2921-2DA.. / -2DE..

2 Auxiliary switch block for mounting on the front 3RH2911-2FA.. / -2GA.. / -2HA.. / -2NF..

Figure C-18 3RT2.2.-2 and 3RT202.-.....-0LA2 contactors (spring-loaded connection system) with auxiliary switch blocks mounted

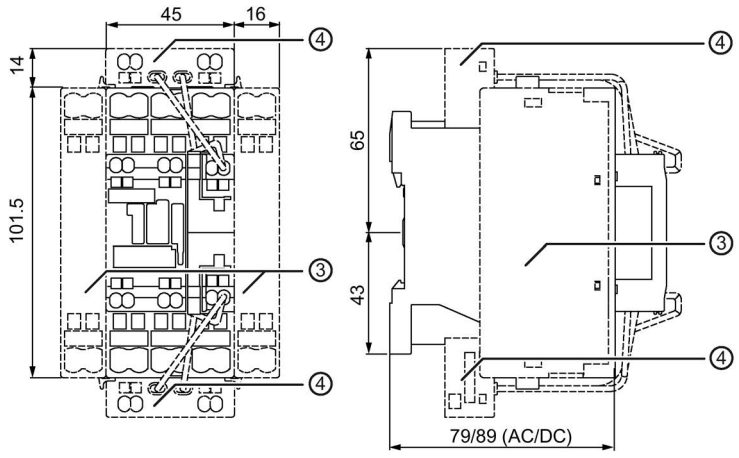

3	4-pole contactor for switching resistive loads	3RT232.
	4-pole pole-changing contactor for changing the polarity of hoisting gear motors (2 NO contacts and 2 NC contacts)	3RT252.
4	Coil terminal module (from above/from below)	3RT2926-4RA12/-4RB12

Figure C-19 3RT2.2.-2 and 3RT202.-.....-0LA2 contactors (spring-loaded connection system) with accessories mounted

3RT2.2.-4 contactors (3-pole) in ring cable lug connection system with accessories mounted

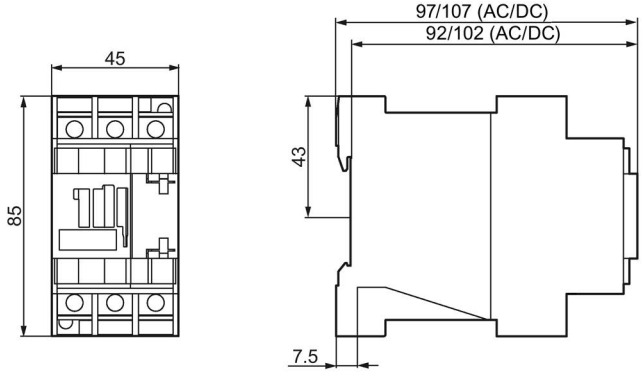

Figure C-20 3RT2.2.-4 contactors (ring cable lug connection system)

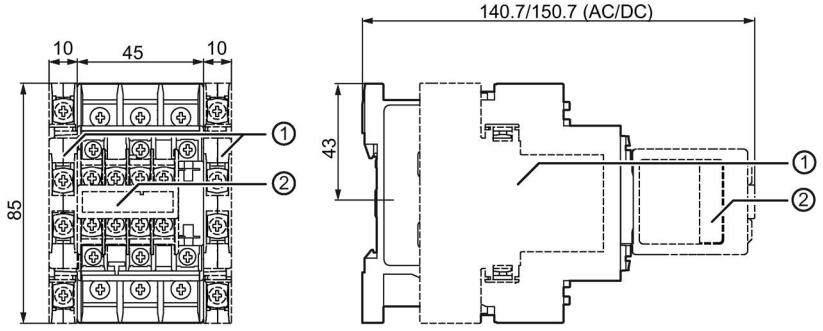

1	Laterally mountable auxiliary switch block	3RH2921-4DA..
2	Auxiliary switch block for mounting on the front	3RH2911-4FA.. / -4GA.. / -4HA.. / -4NF..

Figure C-21 3RT2.2.-4 contactors (ring cable lug connection system) with auxiliary switch blocks mounted

Drilling plan for 3RT2.2. contactors

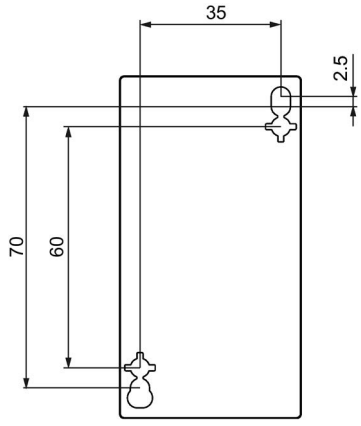

Figure C-22 Drilling plan for 3RT2.2. contactors (size S0)

C.4 3RT2.3 contactors (size S2)

3RT2.3.-1 contactors (3-pole) with accessories mounted

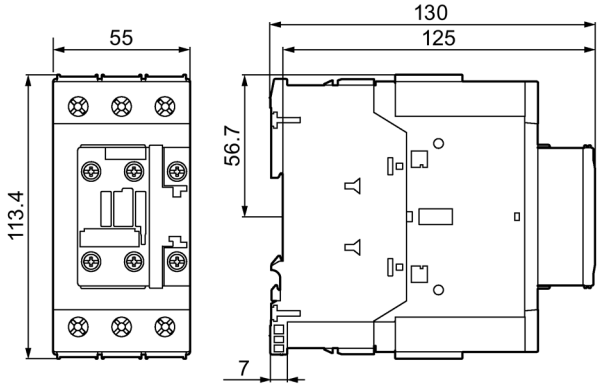

Figure C-23 3RT2.3.-1 contactor (screw-type connection system)

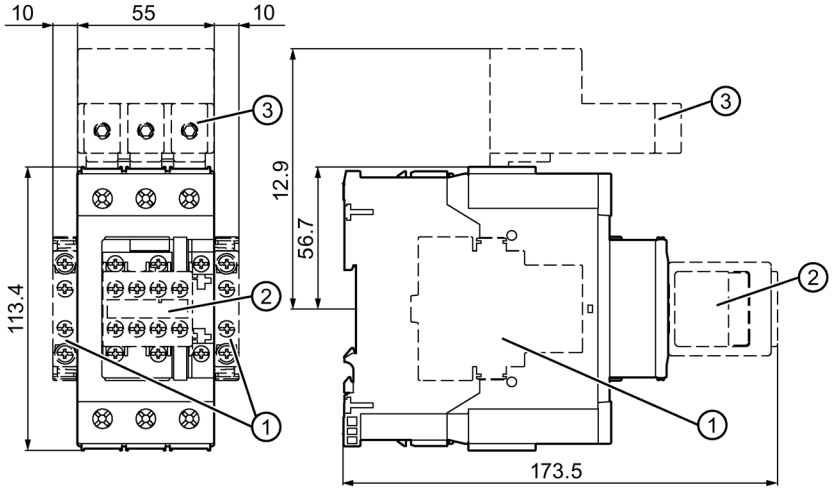

1	Laterally mountable auxiliary switch block	3RH2921-1DA.. / -1DE..
2	Auxiliary switch block for mounting on the front	3RH2911-1FA.. / -1GA.. / -1HA.. / -1NF..
3	3-phase infeed terminal	3RV2925-5AB

Figure C-24 3RT2.3.-1 contactors (screw-type connection system) with auxiliary switch blocks mounted and 3-phase infeed terminal

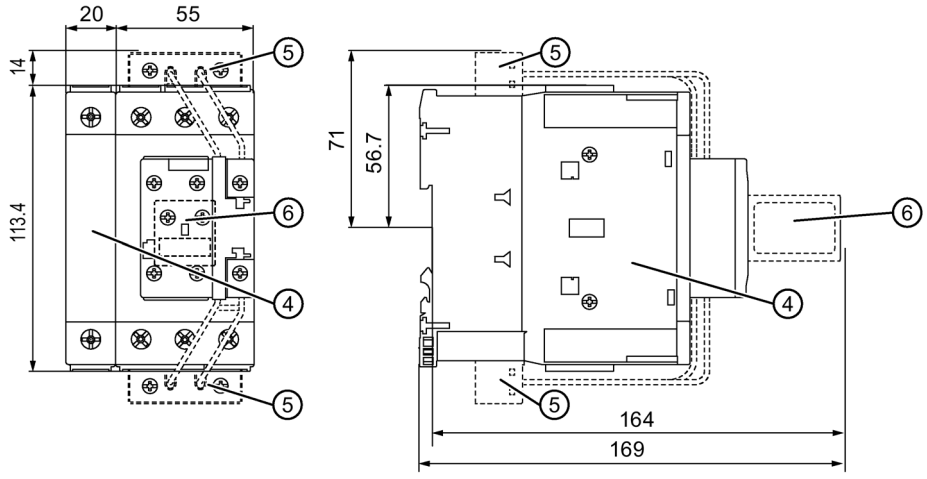

4	4-pole contactor for switching resistive loads	3RT233.-1
	4-pole pole-changing contactor for changing the polarity of hoisting gear motors (2 NO contacts and 2 NC contacts)	3RT253.-1
5	Coil terminal module	3RT2926-4RA11 / -4RB11
6	Auxiliary switch block for mounting on the front	3RH2911-1AA.. / -1BA

Figure C-25 3RT2.3.-1 contactors (screw-type connection system) with attached accessories

3RT2.3.-3 contactors (3-pole) with attached accessories

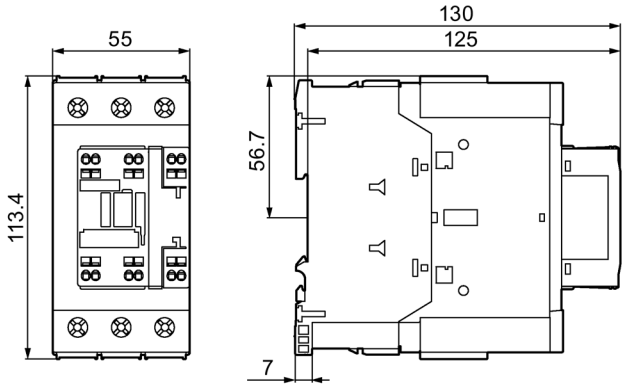

Figure C-26 3RT2.3.-3 contactor (spring-loaded connection system)

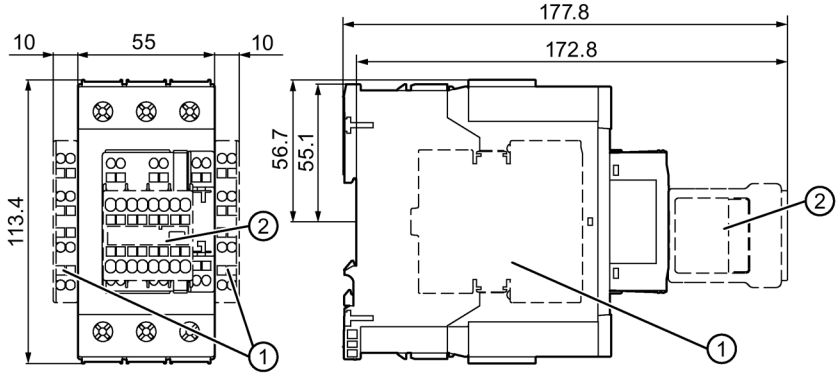

1	Laterally mountable auxiliary switch block	3RH2921-1DA.. / -1DE..
2	Auxiliary switch block for mounting on the front	3RH2911-1FA.. / -1GA.. / -1HA.. / -1NF..

Figure C-27 3RT2.3.-3 contactors (screw-type connection system) with auxiliary switch blocks mounted and 3-phase infeed terminal

Drilling diagram for 3RT2.3. contactors

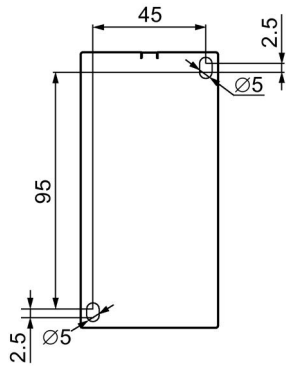

Figure C-28 Drilling plan for 3RT2.3. contactors (size S2)

C.5 3RT2.4 contactors (size S3)

3RT2.4.-1 contactors with attached accessories

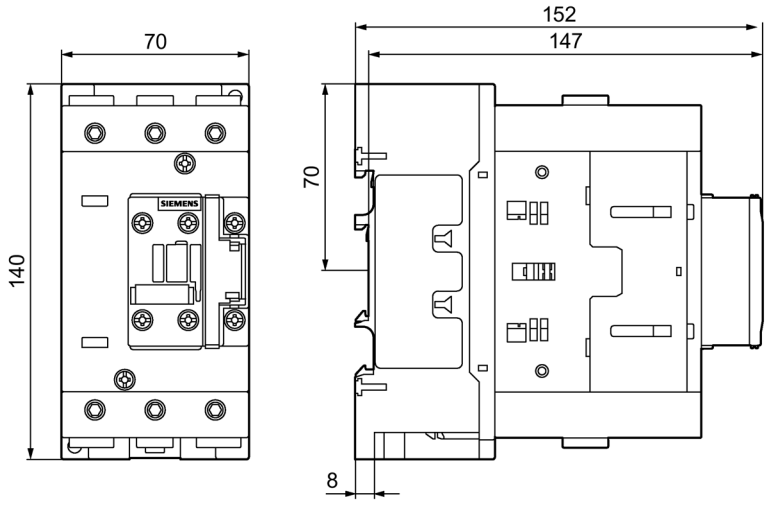

Figure C-29 3RT204.-1 contactor (3-pole)

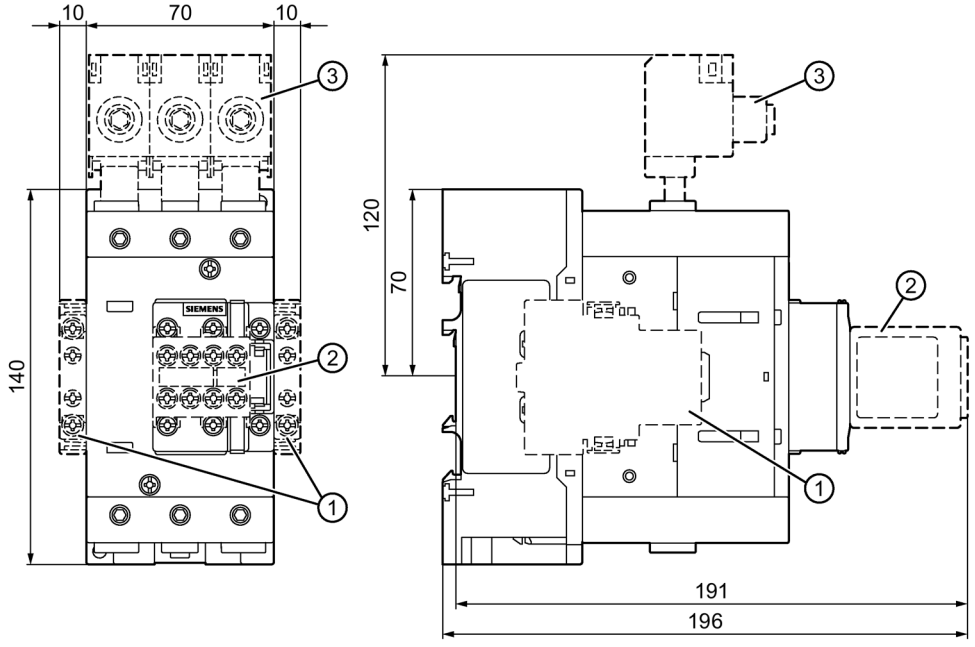

1	Laterally mountable auxiliary switch block	3RH2921-1DA.. / -1DE..
2	Auxiliary switch block for mounting on the front	3RH2911-1FA.. / -1GA.. / -1HA.. / -1NF..
3	3-phase infeed terminal	3RV2925-5AB

Figure C-30 3RT204.-1 contactors (screw-type connection system) with auxiliary switch blocks mounted and 3-phase infeed terminal

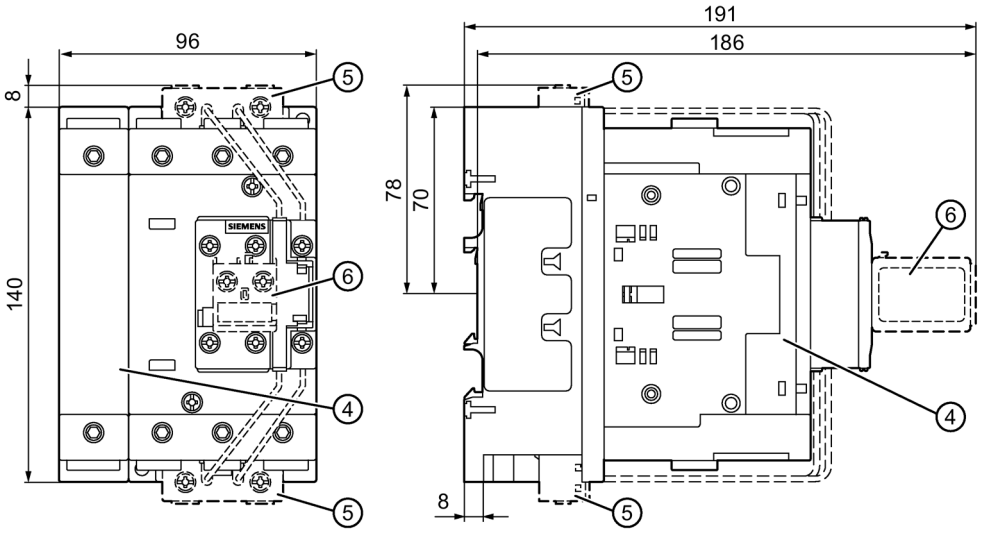

4	4-pole contactor for switching resistive loads	3RT233.-1
	4-pole pole-changing contactor for changing the polarity of hoisting gear motors (2 NO contacts and 2 NC contacts)	3RT253.-1
5	Coil terminal module	3RT2926-4RA11 / -4RB11
6	Auxiliary switch block for mounting on the front	3RH2911-1AA.. / -1BA

Figure C-31 3RT2.4.-1 contactors (screw-type connection system) with attached accessories

3RT204.-3 contactors (3-pole) with attached accessories

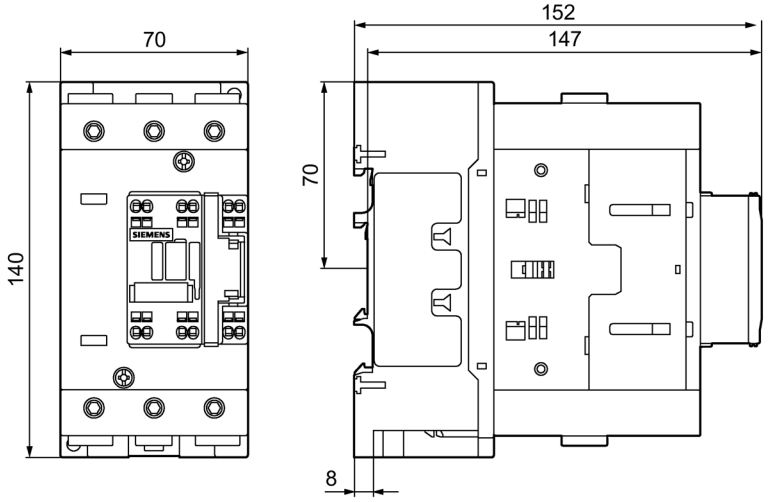

Figure C-32 3RT204.-3 (spring-loaded connection system)

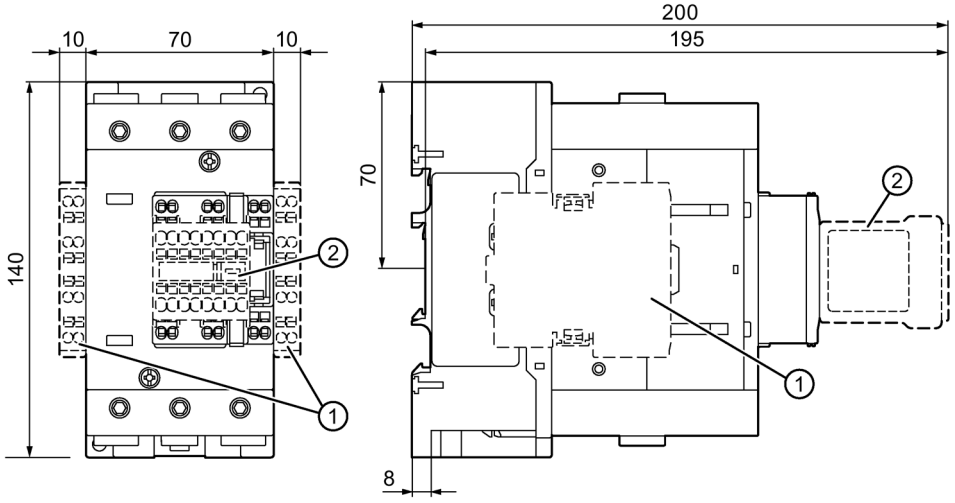

1	Laterally mountable auxiliary switch block	3RH2921-1DA.. / -1DE..
2	Auxiliary switch block for mounting on the front	3RH2911-1FA.. / -1GA.. / -1HA.. / -1NF..

Figure C-33 3RT204.-3 contactor (spring-loaded connection system) with mounted auxiliary switch blocks

Drilling diagram for 3RT2.4 contactors

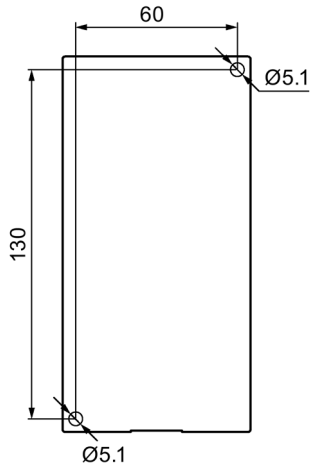

C.6 3RT1.5 contactors (size S6)

3RT1.5 contactors

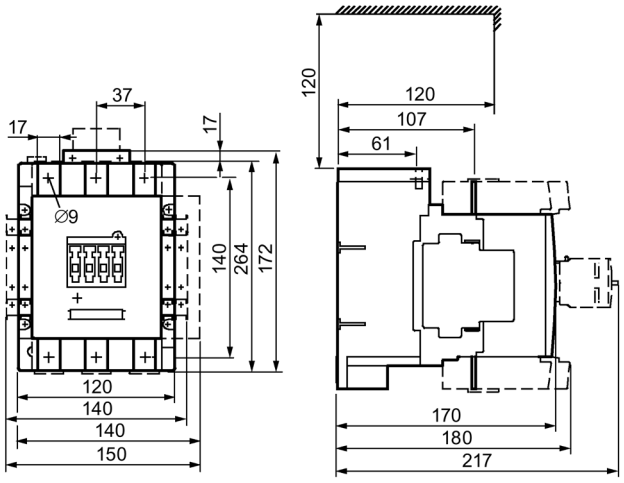

Drilling diagram for 3RT1.5. contactors

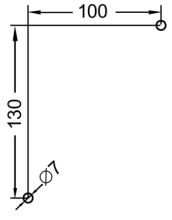

C.7 3RT1.6 contactors (size S10)

3RT1.6 contactors

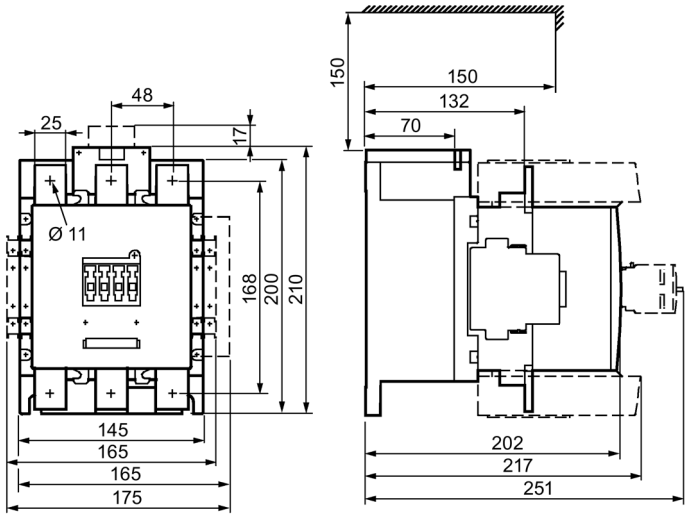

Drilling diagram for 3RT1.6. contactors

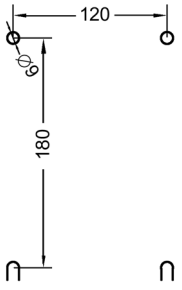

C.8 3RT1.7 contactors (size S12)

3RT1.7 contactors

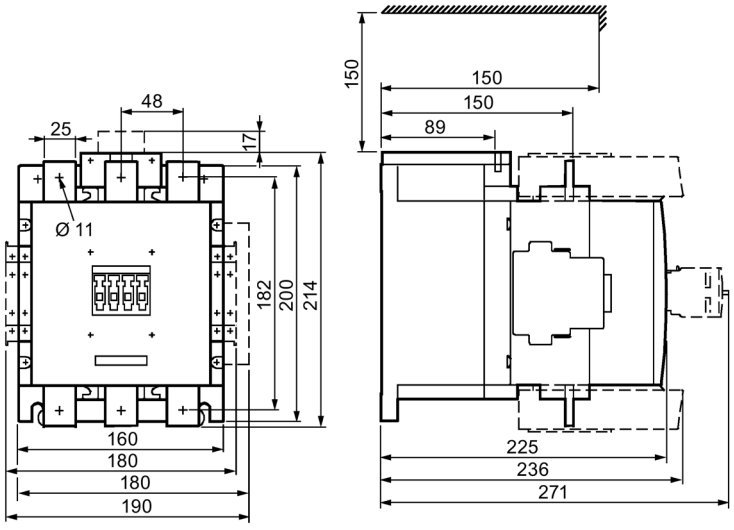

Drilling diagram for 3RT1.7 contactors

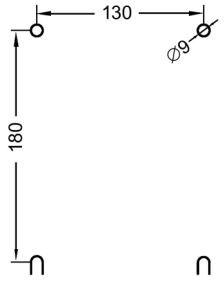

C.9 3RT26 capacitor contactors

C.9.1 3RT261 capacitor contactors (size S00)

3RT261.-1.... capacitor contactors (size S00)

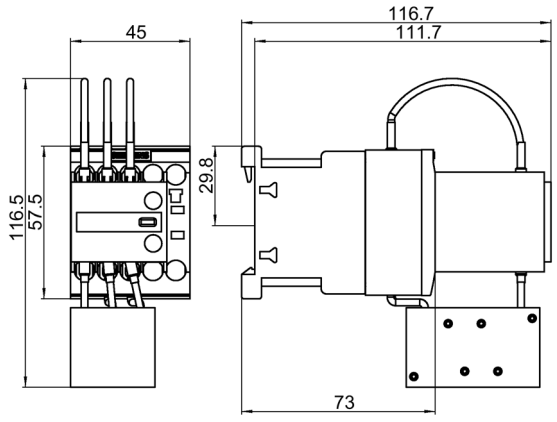

Figure C-34 **3RT261.-1.... capacitor contactors (size S00)**

Drilling diagram for 3RT261.-1.... capacitor contactors (size S00)

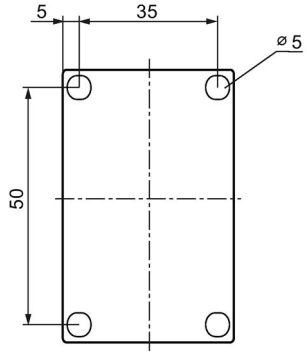

Figure C-35 **Drilling diagram for 3RT261.-1.... capacitor contactors (size S00)**

C.9.2 3RT262 capacitor contactors (size S0)

3RT262.-1.... capacitor contactors (size S0)

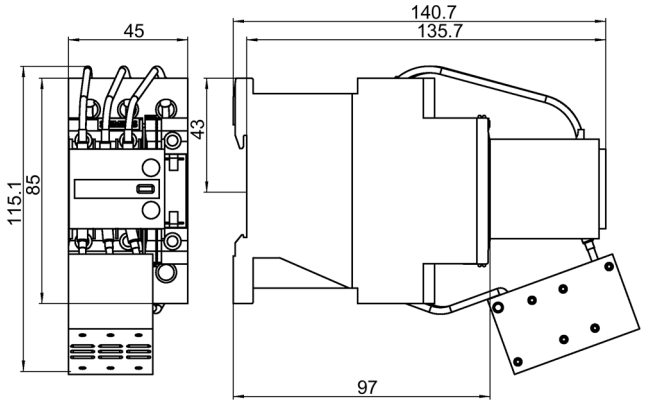

Figure C-36 **3RT2625-1A... capacitor contactors (size S0)**

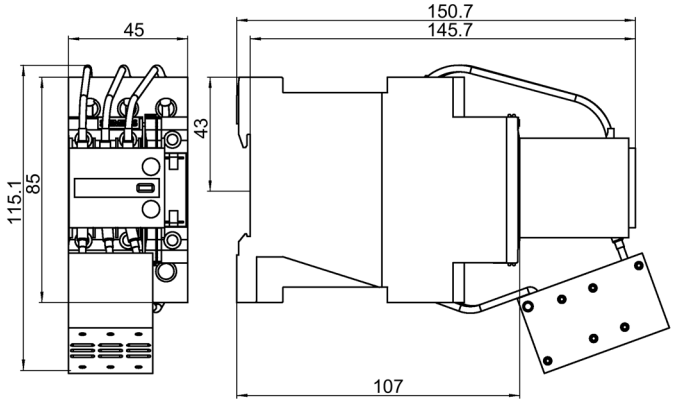

Figure C-37 **3RT2625-1B... capacitor contactors (size S0)**

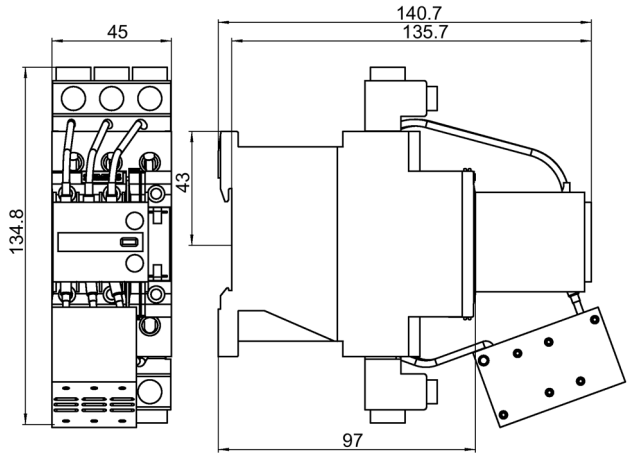

Figure C-38 **3RT2628-1A... capacitor contactors (size S0)**

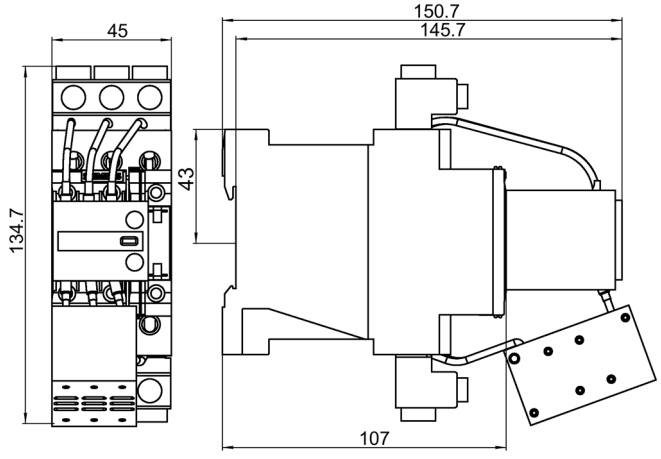

Figure C-39 **3RT2628-1B... capacitor contactors (size S0)**

Drilling diagram for 3RT262.-1.... capacitor contactors (size S0)

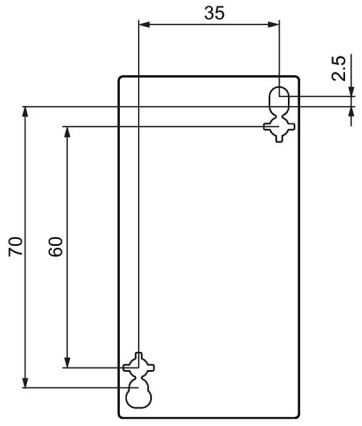

Figure C-40 **Drilling diagram for 3RT262.-1.... capacitor contactors (size S0)**

C.9.3 3RT263 capacitor contactors (size S2)

3RT263.-1.... capacitor contactors (size S2)

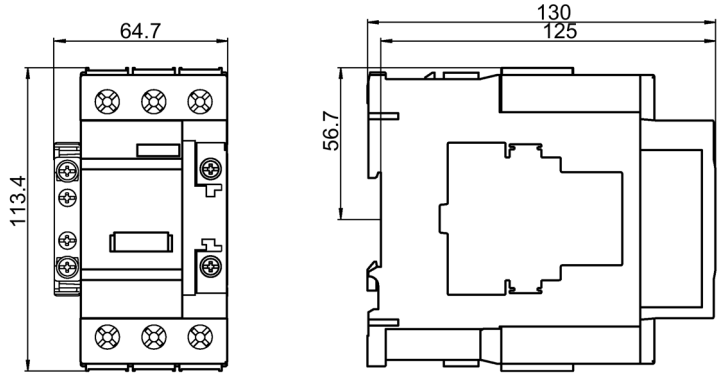

Figure C-41 **3RT263.-1.... capacitor contactors (size S2)**

Drilling diagram for 3RT263.-1.... capacitor contactors (size S2)

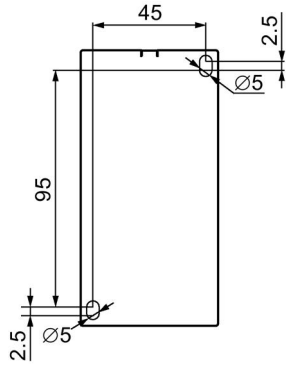

Figure C-42 **Drilling diagram for 3RT263.-1.... capacitor contactors (size S2)**

C.10 3RA23 reversing contactor assemblies

C.10.1 3RA231 reversing contactor assemblies (size S00)

3RA231.-8X.3.-1 reversing contactor assemblies (size S00, screw-type connection system)

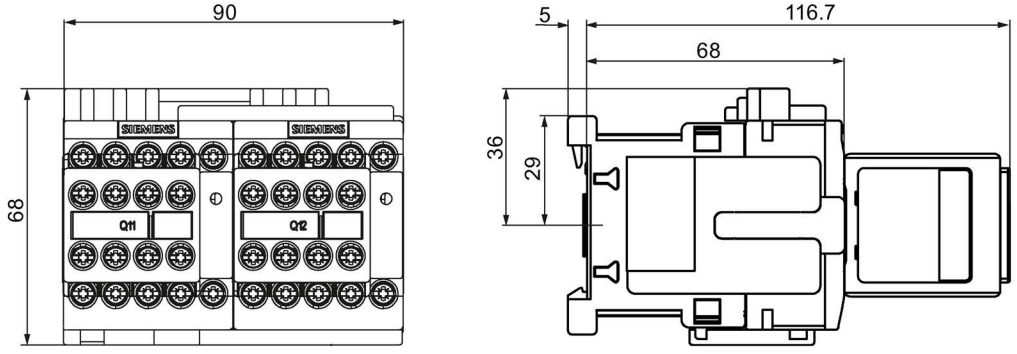

Figure C-43 3RA231.-8X.3.-1 reversing contactor assemblies (size S00, screw-type connection system)

Drilling diagram for the 3RA231.-8X.3.-1 reversing contactor assemblies (size S00, screw-type connection system)

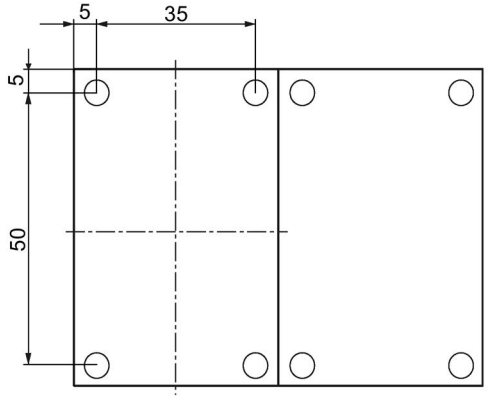

Figure C-44 Drilling diagram for the 3RA231.-8X.3.-1 reversing contactor assemblies (size S00, screw-type connection system)

3RA231.-8X.3.-2 reversing contactor assemblies (size S00, spring-loaded connection)

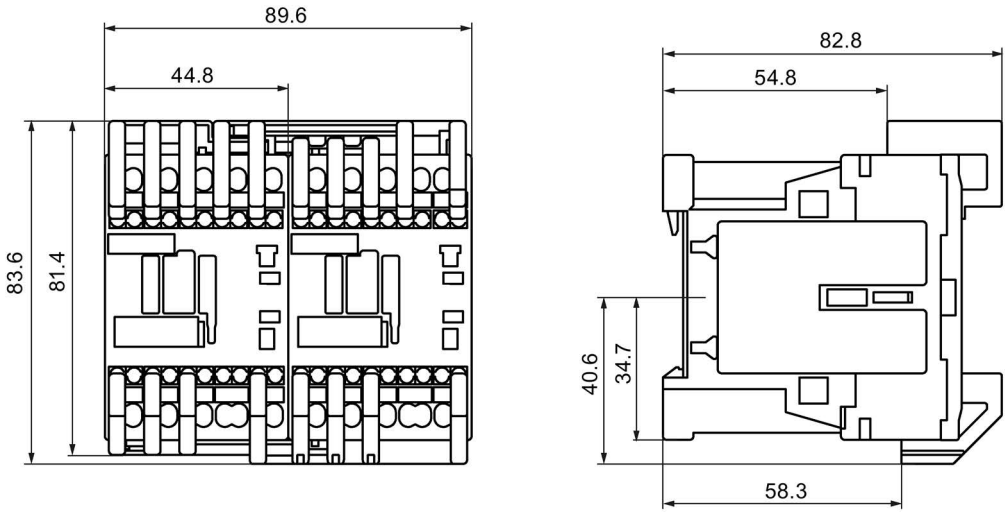

Figure C-45 3RA231.-8X.3.-2 reversing contactor assemblies (size S00, spring-loaded connection)

Drilling diagram of the 3RA231.-8X.3.-2 reversing contactor assemblies (size S00, spring-loaded connection system)

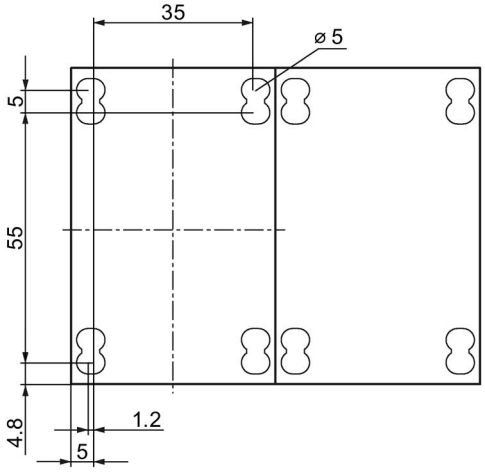

Figure C-46 Drilling diagram of the 3RA231.-8X.3.-2 reversing contactor assemblies (size S00, spring-loaded connection system)

C.10.2 3RA232 reversing contactor assemblies (size S0)

3RA232.-8XB30-1 and 3RA232.-8XD3.-1 reversing contactor assemblies (size S0, screw-type connection system)

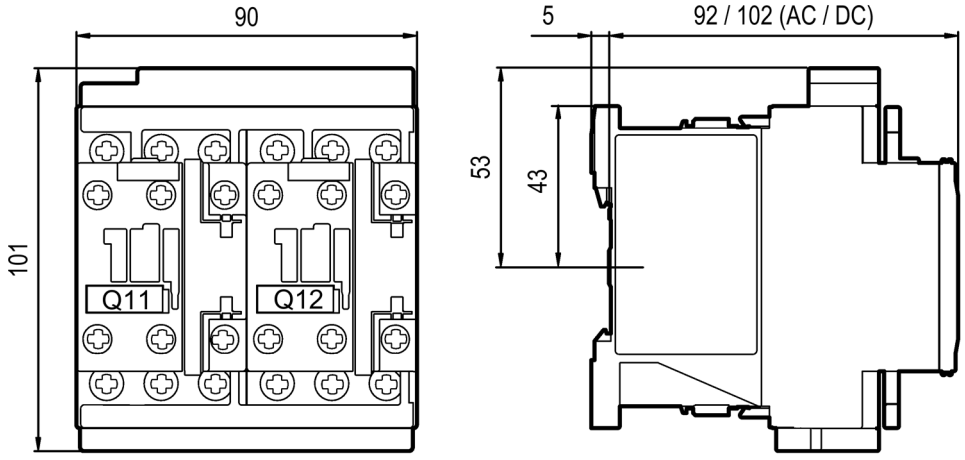

Figure C-47 3RA232.-8XB30-1 reversing contactor assemblies (size S0, screw-type connection system)

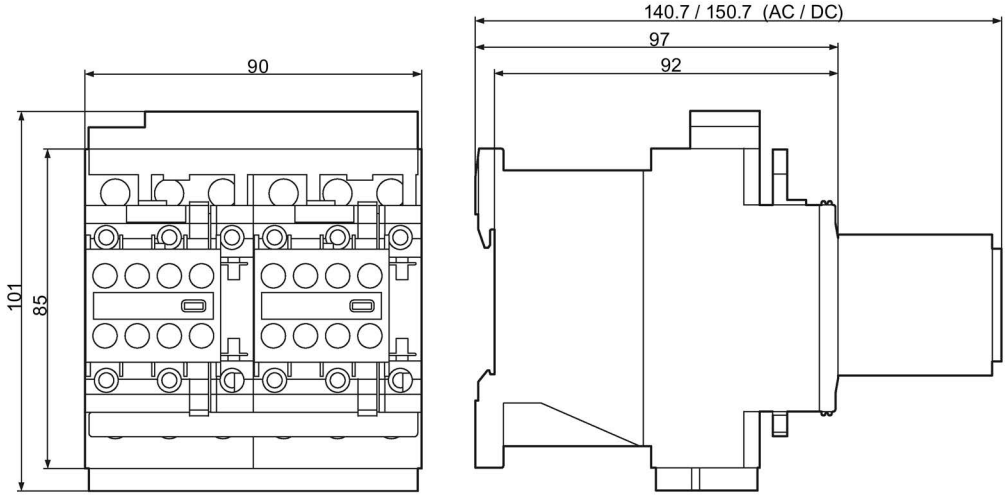

Figure C-48 3RA232.-8XD3.-1 reversing contactor assemblies (size S0, screw-type connection system)

Drilling diagram for 3RA232.-8XB30-1 and 3RA232.-8XD3.-1 reversing contactor assemblies (size S0, screw-type connection system)

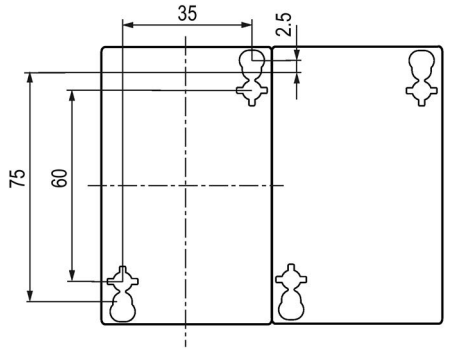

Figure C-49 Drilling diagram for 3RA232.-8XB30-1 and 3RA232.-8XD3.-1 reversing contactor assemblies (size S0, screw-type connection system)

3RA232.-8XB30-2 and 3RA232.-8XD3.-2 reversing contactor assemblies (size S0, spring-loaded connection system)

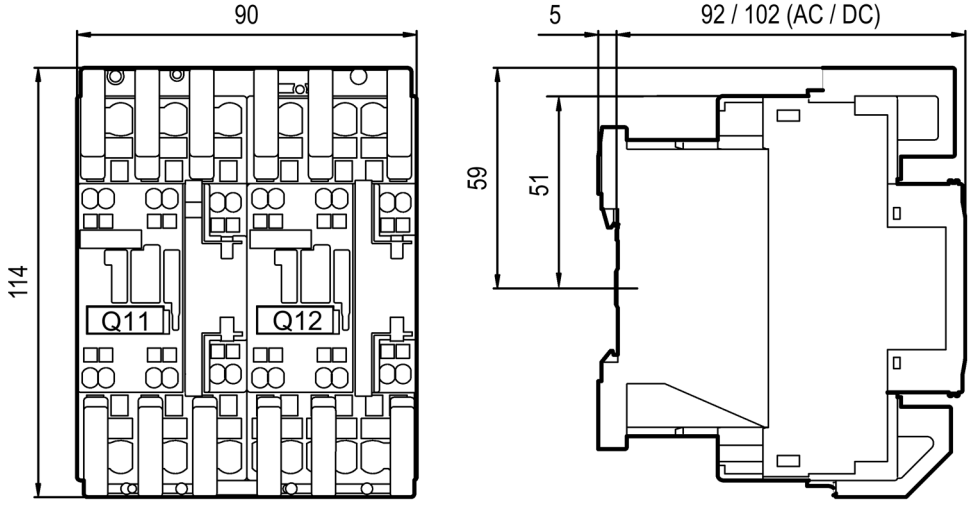

Figure C-50 3RA232.-8XB30-2 reversing contactor assemblies (size S0, spring-loaded connection system)

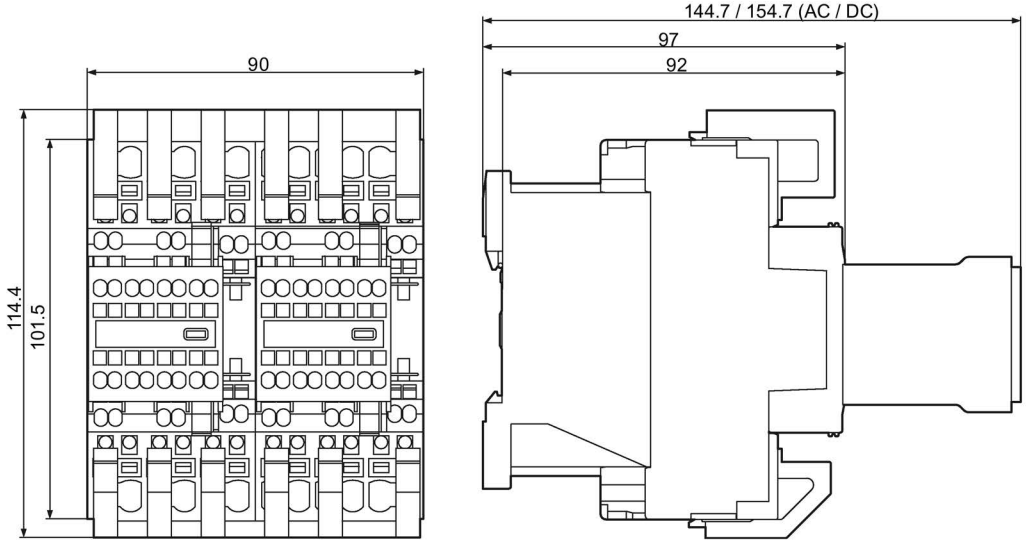

Figure C-51 3RA232.-8XD3.-2 reversing contactor assemblies (size S0, spring-loaded connection system)

Drilling diagram for 3RA232.-8XB30-2 and 3RA232.-8XD3.-2 reversing contactor assemblies (size S0, spring-loaded connection system)

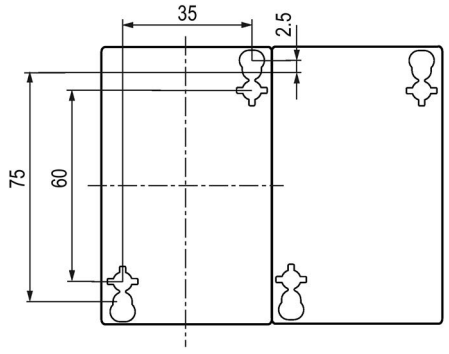

Figure C-52 Drilling diagram for 3RA232.-8XB30-2 and 3RA232.-8XD3.-2 reversing contactor assemblies (size S0, spring-loaded connection system)

C.10.3 3RA233 reversing contactor assemblies (size S2)

3RA233.-8XB30-1 reversing contactor assemblies (size S2)

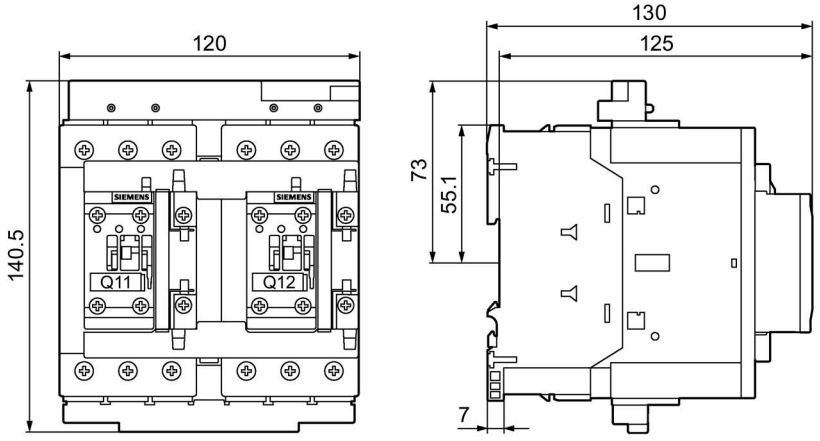

Figure C-53 3RA233.-8XB30-1 reversing contactor assemblies

Drilling diagram for 3RA233.-8XB30-1 reversing contactor assemblies (size S2)

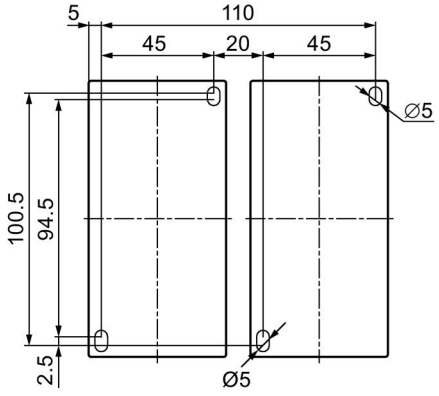

Figure C-54 Drilling diagram for 3RA233.-8XB30-1 reversing contactor assemblies

C.10.4 3RA234 reversing contactor assemblies (size S3)

C.10.4.1 3RA234.-8X.30-1 reversing contactor assemblies (size S3)

3RA234.-8X.30-1 reversing contactor assemblies (size S3)

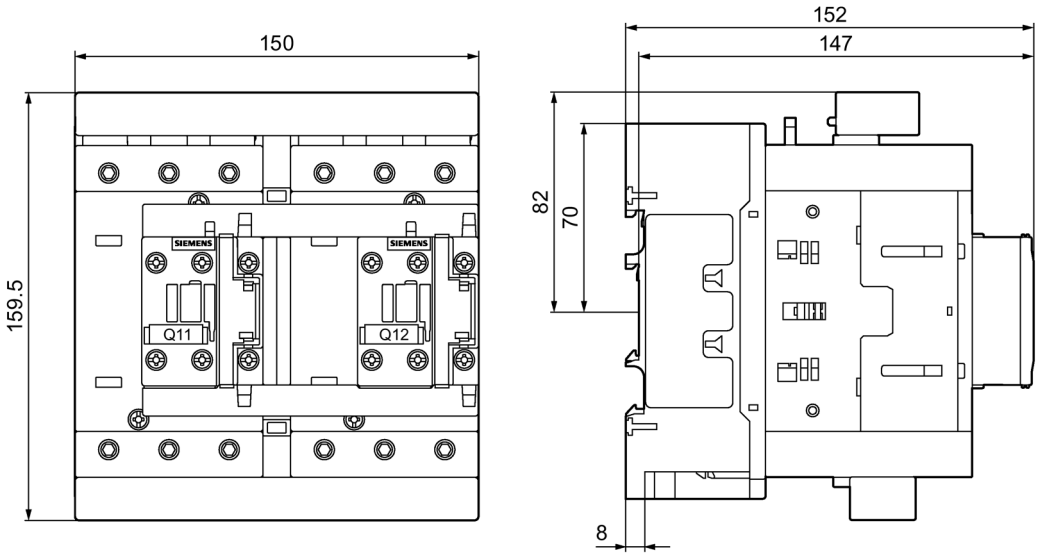

C.10.4.2 Drilling diagram for 3RA234.-8X.30-1 reversing contactor assemblies (size S3)

Drilling diagram for 3RA234.-8X.30-1 reversing contactor assemblies (size S3)

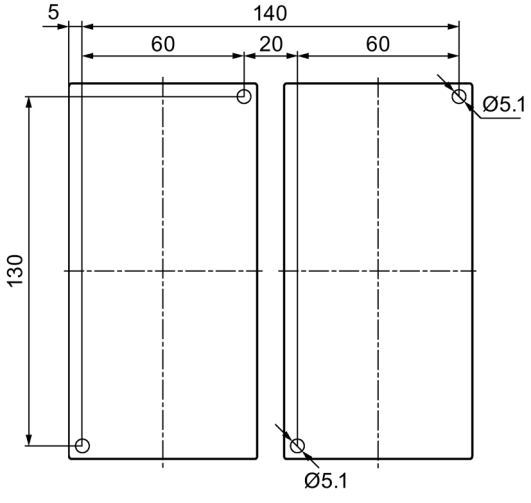

C.11 3RA24 contactor assemblies for star-delta (wye-delta) start

C.11.1 3RA241 contactor assemblies for star-delta (wye-delta) start (size S00)

3RA241.-8X.31-1 contactor assemblies for star-delta (wye-delta) start (size S00, screw-type connection system)

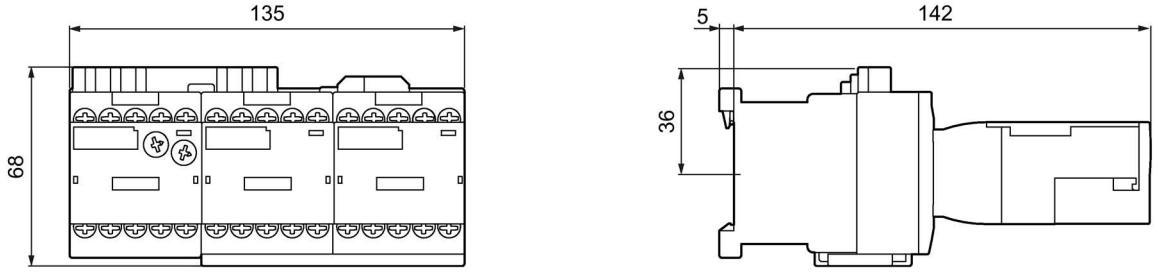

Figure C-55 3RA241.-8X.31-1 contactor assemblies for star-delta (wye-delta) start (size S00, screw-type connection system)

Drilling diagram for 3RA241.-8X.31-1 contactor assemblies for star-delta (wye-delta) start (size S00, screw-type connection system)

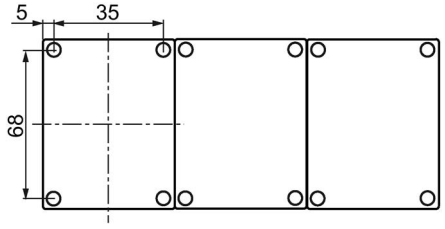

Figure C-56 Drilling diagram for 3RA241.-8X.31-1 contactor assemblies for star-delta (wye-delta) start (size S00, screw-type connection system)

3RA241.-8X.31-2 contactor assemblies for star-delta (wye-delta) start (size S00, spring-loaded connection system)

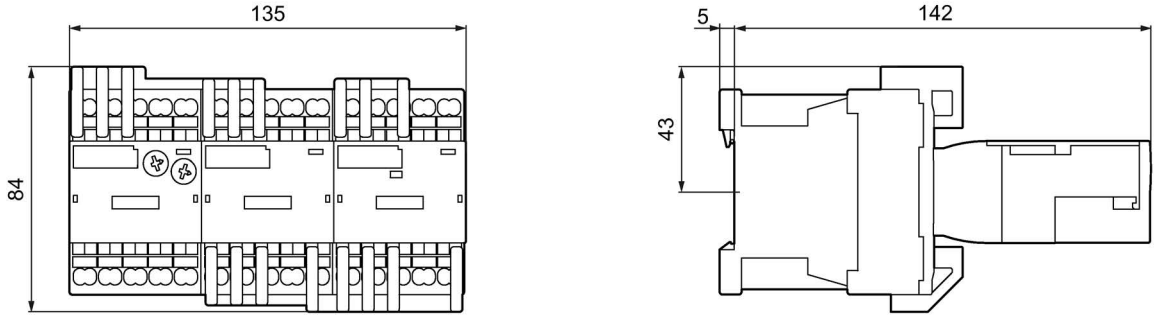

Figure C-57 3RA241.-8X.31-2 contactor assemblies for star-delta (wye-delta) start (size S00, spring-loaded connection system)

Drilling diagram for 3RA241.-8X.31-2 contactor assemblies for star-delta (wye-delta) start (size S00, spring-loaded connection system)

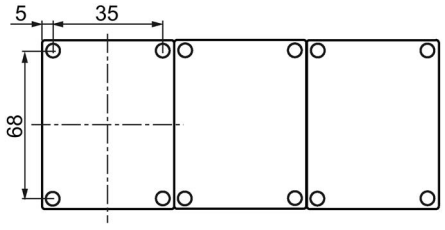

Figure C-58 Drilling diagram for 3RA241.-8X.31-2 contactor assemblies for star-delta (wye-delta) start (size S00, spring-loaded connection system)

C.11.2 3RA242 contactor assemblies for star-delta (wye-delta) start (size S0)

C.11.2.1 3RA242.-8X.3.-1 contactor assemblies for star-delta (wye-delta) start (size S0, screw-type connection system)

3RA242.-8X.3.-1 contactor assemblies for star-delta (wye-delta) start (size S0, screw-type connection system)

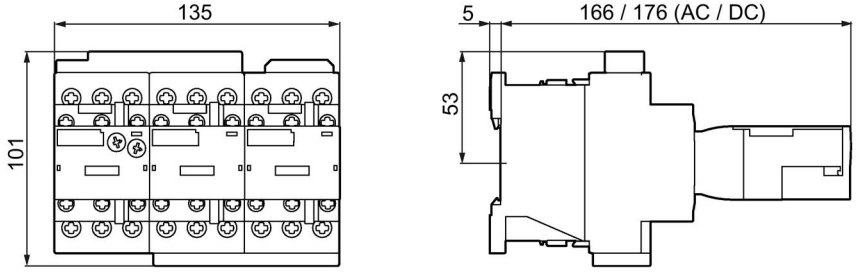

Figure C-59 3RA242.-8X.3.-1 contactor assemblies for star-delta (wye-delta) start (size S0, screw-type connection system)

C.11.2.2 Drilling diagram for 3RA242.-8X.3.-1 contactor assemblies for star-delta (wye-delta) start (size S0, screw-type connection system)

Drilling diagram for 3RA242.-8X.3.-1 contactor assemblies for star-delta (wye-delta) start (size S0, screw-type connection system)

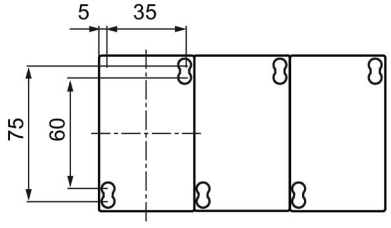

Figure C-60 Drilling diagram for 3RA242.-8X.3.-1 contactor assemblies for star-delta (wye-delta) start (size S0, screw-type connection system)

C.11.2.3 3RA242.-8X.3.-2 contactor assemblies for star-delta (wye-delta) start (size S0, spring-loaded connection system)

3RA242.-8X.3.-2 contactor assemblies for star-delta (wye-delta) start (size S0, spring-loaded connection system)

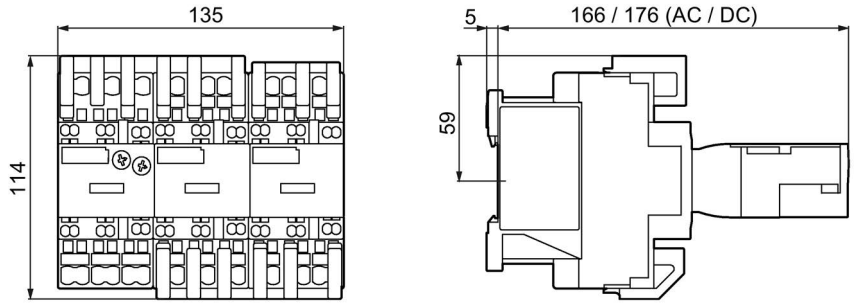

Figure C-61 3RA242.-8X.3.-2 contactor assemblies for star-delta (wye-delta) start (size S0, spring-loaded connection system)

C.11.2.4 Drilling diagram for 3RA242.-8X.3.-2 contactor assemblies for star-delta (wye-delta) start (size S0, spring-loaded connection system)

Drilling diagram for 3RA242.-8X.3.-2 contactor assemblies for star-delta (wye-delta) start (size S0, spring-loaded connection system)

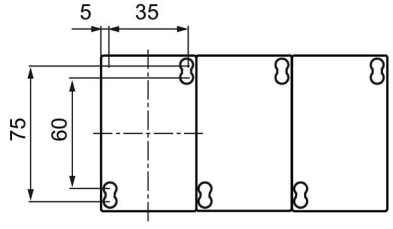

Figure C-62 Drilling diagram for 3RA242.-8X.3.-2 contactor assemblies for star-delta (wye-delta) start (size S0, spring-loaded connection system)

C.11.3 3RA243 contactor assemblies for star-delta (wye-delta) start (size S2)

3RA243.-8X.32-1 contactor assemblies for star-delta (wye-delta) start (size S2)

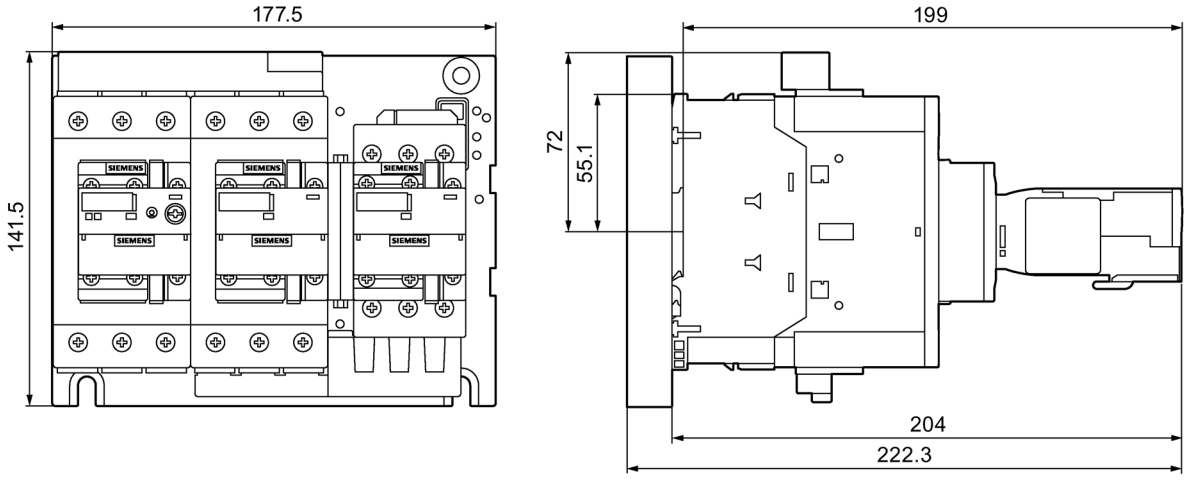

Figure C-63 3RA2434-8X.32-1 / 3RA2435-8X.32-1 / 3RA2436-8X.32-1 contactor assemblies for star-delta (wye-delta) start (S2-S2-S0) on mounting plate

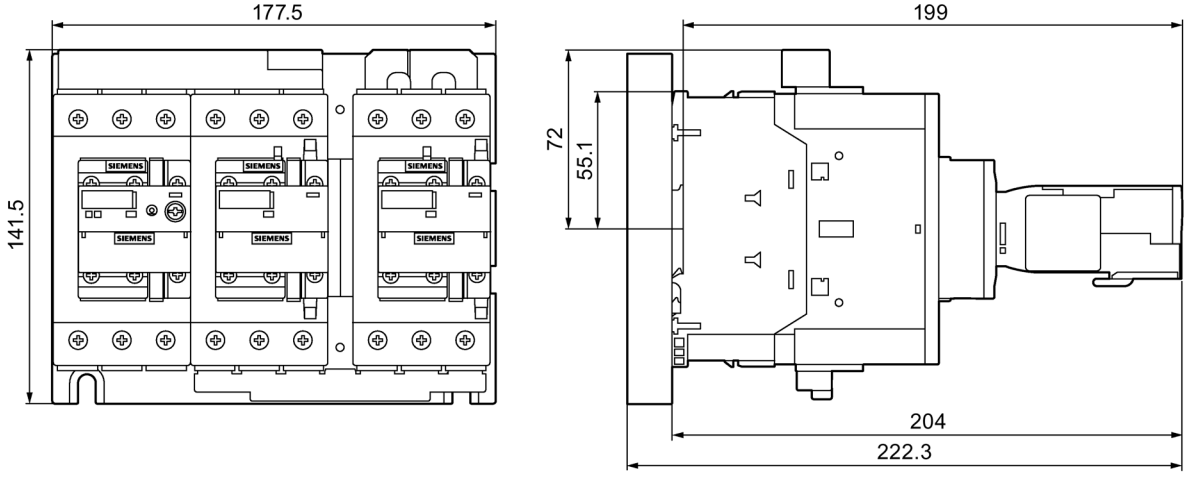

Figure C-64 3RA2437-8X.32-1 contactor assemblies for star-delta (wye-delta) start (S2-S2-S2) on mounting plate

Drilling diagram for the mounting plate for 3RA243.-8X.32-1 contactor assemblies for star-delta (wye-delta) start (size S2)

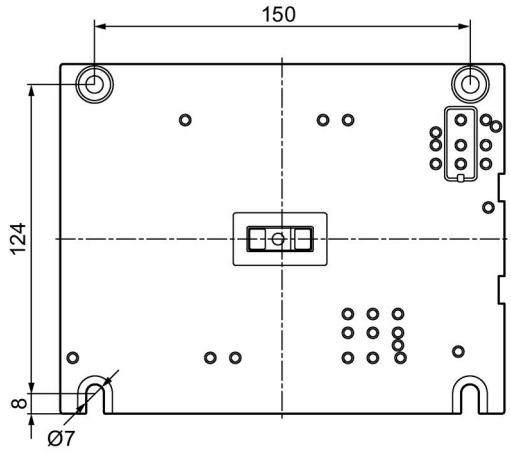

Figure C-65 Drilling diagram for the mounting plate for 3RA243.-8X.32-1 contactor assemblies for star-delta (wye-delta) start

C.11.4 3RA244 contactor assemblies for star-delta (wye-delta) start (size S3)

C.11.4.1 3RA244.-8X.32-1 contactor assemblies for star-delta (wye-delta) start (size S3)

3RA244.-8X.32-1 contactor assemblies for star-delta (wye-delta) start (size S3)

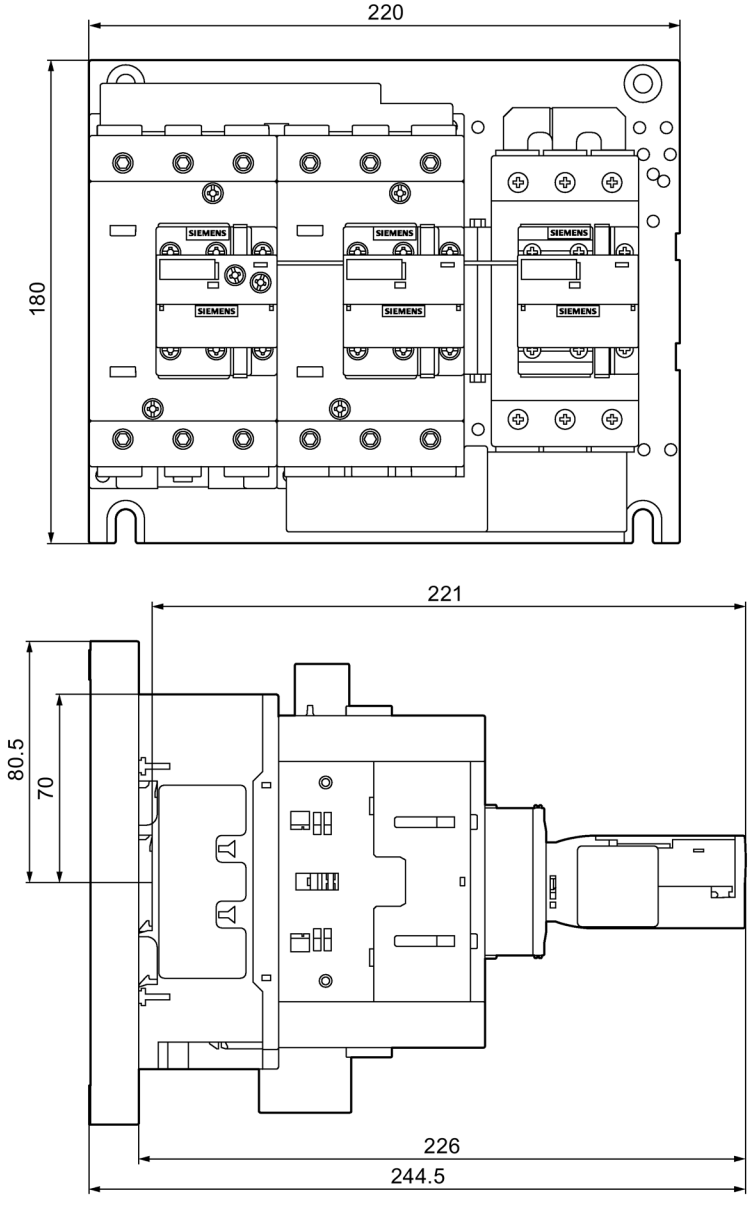

C.11.4.2 Drilling diagram for 3RA244.-8X.32-1 contactor assemblies for star-delta (wye-delta) start (size S3)

Drilling diagram for the mounting plate for 3RA244.-8X.32-1 contactor assemblies for star-delta (wye-delta) start (size S3)

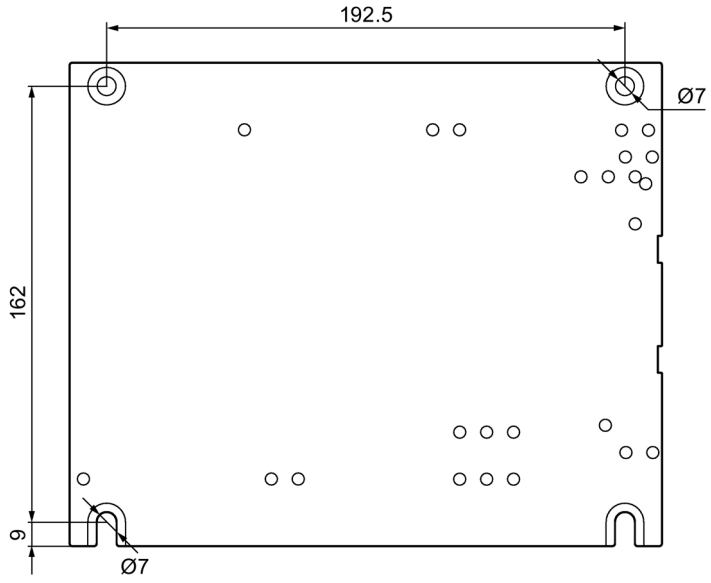

Index

1

1-phase infeed terminal
Contactors, 316

2

2-conductor connection, 199

3

3D model, 17
3-phase infeed terminal
Contactors, 315

4

4-pole contactors, 92, 95

A

Accessories
Contactors, 211, 221
Accessories - Contactors
1-phase infeed terminal, 316
3-phase infeed terminal, 315
Additional load module, 294, 294
Assembly kit for contactor assembly for star-delta (wye-delta) start, 358, 361, 365, 370, 381, 395, 401
Assembly kit for reversing contactor assembly, 333, 335
Auxiliary switch blocks, 223, 226, 252, 258, 261
Box terminal block, 420, 421
Coil terminal module, 298, 310, 311
Connection modules, 329
Control kit, 295, 296
Coupling link, 298, 301
Cover for ring cable lug, 313
EMC suppression module, 282, 284, 286
Function modules for connection to the automation level, 330
Function modules for mounting on contactors, 331
Insulating stop, 327
LED display indicator module, 305, 306
Link module for motor starter protector, 323
Link module for two contactors in series, 321, 321
Mechanical latch, 290, 291, 293
OFF-delay device, 287, 287, 288
Parallel switching connector, 318, 320
Parallel switching connector, 318, 320
Pneumatically delayed auxiliary switch, 324, 326
Pneumatically delayed auxiliary switches, 325
Sealable cover, 314, 314
Solder pin adapter, 307, 308
Solid-state time-delay auxiliary switch blocks, 422, 425, 425
Surge suppressor, 264, 268, 276
Terminal cover for cable lug connection and busbar connection, 405, 407
Terminal covers for box terminal block, 416, 416
Terminal module, 328
Additional load module
Contactors, 294, 294
Ambient temperature
Contactor relays, 81
Contactors for railway applications, 85
Power contactors, 82, 84
App
Siemens Industry Online Support, 18
Applications
Contactors, 27, 63
Approvals, 21
Contactors, 21
AS-Interface, 88, 120, 359
Assembly kit for contactor assembly for star-delta (wye-delta) start
Contactors, 358, 361, 365, 370, 381, 395, 401
Assembly kit for reversing contactor assembly
Contactors, 333, 335
Assembly with mechanical interlock
4-pole, 340
Auxiliary contacts (contactors), 197, 223
Integrated, 34, 223
Time-delayed, 231
Auxiliary switch blocks
Contactor relays, 97
Contactors, 223, 226, 252, 258, 261
Reversing contactor assemblies, 115
Auxiliary switch blocks (contactors)
Fitting according to standards, 230
Fitting rules, 227
For contactor relays, 231
Maximum number, 226, 258

Solid-state compatible, 225, 256
With overlapping contacting, 225, 257
Auxiliary switches (contactors)
Solid-state time delay, 331

B

Basic knowledge, 15
Basic module, 359, 368
Box terminal block
Contactors, 420, 421

C

CAx data, 17, 429, 467
CCW rotation
Contactor assemblies for star-delta (wye-delta) start, 128
Changeover delay
Contactor assemblies for star-delta (wye-delta) start, 120, 125
Reversing contactor assemblies, 112
Class, 125
Clockwise rotation
Reversing contactor assemblies, 117, 335, 338, 342, 346, 352, 355
Closed, 109, 109, 109
Coil surge suppressor, 65
Coil terminal, 198
Coil terminal module
Contactors, 298, 310, 311
Communication
Power contactors, 88
Configuration information (contactor)
Frequency converter, 136
Connection
Contactor assemblies for star-delta (wye-delta) start, clockwise rotation, 126
Contactor assemblies for star-delta (wye-delta) start, counterclockwise rotation, 128
Connection systems
3RT1 power contactors, 39
3RT12 vacuum contactors, 39
3RT2 power contactors, 34
Contactor assembly for star-delta (wye-delta) start, 56
Contactor relays, 45
Contactors, 197
Reversing contactor assembly, 53
Contactor assemblies, 64
Contactor assemblies for star-delta (wye-delta) start, 29, 56, 64, 119, 128
Changing the direction of rotation, 128
Control circuit, 129
Control circuit wiring, 120, 357, 367
Main circuit, 129
Contactor relays, 29, 45, 97
Contactors
Switching, 63
Control kit
Contactors, 295, 296
Counterclockwise rotation
Reversing contactor assemblies, 117, 335, 338, 342, 346, 352, 355
Coupling link
Contactors, 298, 301
Coupling module, 359, 368
Coupling relays, 64, 109, 264
Cover for ring cable lug
Contactors, 313
CW rotation
Contactor assemblies for star-delta (wye-delta) start, 128

D

Device versions
Contactors, 33
Dimension drawings, 17
DIN EN 50005, 230
DIN EN 50011, 230
DIN EN 50012, 231
Diode combination, 264, 273
Direct-on-line starter, 112
Disposal, 19

E

EMC suppression module
Contactors, 282, 284, 286
EPLAN macros, 17
Equipment features
Contactor relay, 4-pole, 46
Contactor relay, 8-pole, 47

F

Freewheel diode, 264, 273
Frequency converter
Contactor, 136, 136

Function modules
Contactor assemblies for star-delta (wye-delta) start, 56, 357, 367
Function modules for connection to the automation level
Contactors, 330
Function modules for connection to the automation level, 88, 120
Function modules for connection to the automation level
Contactor assemblies for star-delta (wye-delta) start, 359
Function modules for mounting on contactors
Contactors, 331
Function modules for mounting on contactors
Contactor assemblies for star-delta (wye-delta) start, 331, 359
Function modules for mounting on contactors
Contactor assemblies for star-delta (wye-delta) start, 331, 359

H

Holding power, 109

I

Inductive loads, 264, 284
Insulating stop
Contactors, 327
Interfering signals, 264
Interlock
Contactor assemblies for star-delta (wye-delta) start, 125
Electrical, 334, 336, 338
Mechanical, 333, 335, 358
IO-Link, 88, 120, 359

L

Latched contactor relays, 97
LED display indicator module
Contactors, 305, 306
Line capacity, 133
Link module for motor starter protector
Contactors, 323
Link module for two contactors in series
Contactors, 321, 321
Long control cables, 130
Long control cables (contactors)
Switching off, 133
Switching on, 130

M

Main entry, 159
Mechanical latch
Contactors, 290, 291, 293
Minimum clearance
Power contactors, 83
Mirror contacts, 23
Modular System, 463
Mounting position
Contactors, 152

O

OFF-delay device
Contactors, 287, 287, 288
ON period
Power contactors, 84, 290
Operating instructions, 461
Operating mechanism types
Contactors, 65
Operating range, 65
Overvoltage attenuation, 264, 270

P

Parallel switching connector
Contactors, 318, 320
Parallel switching connector
Contactors, 318, 320
Permanent load with parallel connection, 318
Permissible residual current, 294
Pneumatically delayed auxiliary switch
Contactors, 324, 326
Pneumatically delayed auxiliary switch (contactors)
With OFF-delay, 324
With ON-delay, 324
Pneumatically delayed auxiliary switches
Contactors, 325
Positively driven contact elements, 23
Power contactor, 29, 31
Communication-capable, 35, 36, 120, 359
Preferred voltages, 65
Preferred wiring, 119, 125
Product data sheet, 429, 467
Programmable logic controller (PLC), 294, 298, 330
Protective separation, 22

R

Railway applications
Contactors, 64, 85
RC element, 264, 272
Recycling, 19
References, 461
Reversing contactor assemblies, 29, 53, 64, 112
Typical control circuit, 117
Typical main circuit, 116
Ring cable lug connection system, 208

S

Scope of validity
Manual, 15
Screw mounting
Contactors, 151
Screw-type connection system, 200
Sealable cover
Contactors, 314, 314
Service life
Power contactors, 84
SIRIUS system configurator, 64
Snap-on mounting
Contactors, 151, 156
Solder pin adapter
Contactors, 307, 308
Solder pin connection, 45, 199, 307
Solenoid coil operating range
Contactors for railway applications, 85
Power contactors, 83
Solid-state time-delay auxiliary switch blocks
Contactors, 422, 425, 425
Source voltage, 282
Spring-loaded connection system, 206
Standards, 21
Contactors, 21
Star-delta (wye-delta) start
Contactors, 119
Starting current, 119, 125
Starting three-phase motors, 119
Suppression diode, 273
Surge suppression
Integrated, 298
Surge suppressor
Contactors, 264, 268, 276
Surge suppressors (contactors)
Selection aid, 268
Switching
Contactors, 63
Motorized load, 87
Switching frequency
Power contactors, 82, 84
Switching overvoltage, 264
Switch-off delay, 273
Switchover current peak, 125, 127

T

Technical Assistance, 19
Terminal cover for cable lug connection and busbar connection
Contactors, 405, 407
Terminal covers for box terminal block
Contactors, 416, 416
Terminal designations
Contactors, 197
Terminal module
Contactors, 328, 329
Thermal load capacity
Power contactors, 82
Time-delayed switching of contactors, 425
Timing relays, 120, 331, 357, 367
Types of coordination, 459

U

Utilization categories
Contactors, 27, 88, 92, 97

V

Vacuum contactor, 31
Varistor, 264, 271